MILITARY SPECIFICATION

VALVES, STARTER CONTROL, AIRCRAFT ENGINE, GENERAL SPECIFICATION FOR

This specification is approved for use by the Naval Air Systems Command, Department of the Navy, and is available for use by all Departments and Agencies of the Department of Defense.

1. SCOPE

1.1 Scope. This specification covers starter control valves for use with air turbine starters used on aircraft turbine engines.

2* APPLICABLE DOCUMENTS

2.1 Issues of documents. The following documents, of the issues in effect on the date of invitation for bids or request for proposals, form a part of this specification to the extent specified herein:

SPECIFICATIONS

Federal

PPP-T-60	Tape, Pressure Sensitive, Adhesive, Waterproof for Packaging and Sealing
PPP-B-585	Boxes, Wood, Wirewound
PPP-B-601	Boxes, Wood, Cleated-Plywood
PPP-B-621	Boxes, Wood, Nailed and Lock-Corner

Beneficial comments (recoammendations, additions, deletions) and any pertinent data which may be of use in Improving this document should be addreseed to: Engineering Specifications and Standards Department (Code 93) Naval Air Engineering Center, Lakehurst, NJ 08733, by using the self-addressed Standardization Document Improvement Proposal (DD Form 1426) appearing at the end of this document or by letter.

FSC-2995

Source: https://assist.dla.mil -- Downloaded: 2026-11-23T14:17Z
Check the source to verify that this is the current version before use.

SPECIFICATIONS (Continued)

Military

MIL-P- 116	Preservation-Packaging, Method of
MIL-B- 121	Barrier Material, Greaseproofed, Waterproofed, Flexible
MIL-C-5015	Connectors, Electrical, Circular Threaded, AN Type, General Specification for
MIL-E-5400	Electronic Equipment, Airborne, General Specification for
MIL=C-5501	Caps and Plugs, Protective, Dust and Moisture Seal
MIL-C-5541	Chemical Conversion Coatings on Aluminum and AluminUm Alloys
MIL-C-6021	Castings, Classification and Inspection of
MIL-H-6088	Heat Treatment of Aluminum Alloys
MIL-H-6875	Heat Treatment of Steels Aircraft Practice), Proces for
MIL-P-7105	Pipe Threads, Taper, Aeronautical National Form, Symbol ANPT, General Requirements for
MIL-F-7179	Finishings and Coatings; Protection of Aerospace Weapons Systems, Structures and Parts; General Specification for
MIL-S-7742	Screw Threads, Standard, Optimum Selected Series; General Specification for
MIL-A-8625	Anodic Coatings, for Aluminum and Aluminum Alloys
MIL-S-8879	Screw Threads, Controlled Radius Root with Increased Minor Diameter, General Specification for
MXL-P-9400	Plastic Laminate and Sandwich Construction Parts, Aircraft Structural, Process Specification Requirements

Source: https://assist.dla.mil -- Downloaded: 2026-11-23T14:17Z
Check the source to verify that this is the current version before use.

SPECIFICATIONS (Continued)

Military (Continued)

MIL-C-11796	Corrosion Preventative, Petrolatum, Hot Application
MIL-C-16173	Corrosion Preventative Compound, Solvent Cutback, Cold Application
MIL-A-21180	Aluminum Alloy Castings, High Strength
MIL-G-21480	Generator System, 400 Hertz Alternating Current, Aircraft, General Specification for
MIL-E-25499	Electrical System, Aircraft, Design and Installation of, General Specification for
MIL-V-81995/l	Valve, Starter Control, Aircraft Engine, For T56 Engine
MIL-V-81995/2	Valve, Starter Control, Aircraft Engine, For TF30 Engine
MIL-V-81995/3	Valve, Starter Control, Aircraft Engine, For J52 Engine
MIL-V-81995/4	Valve, Starter Control, Aircraft Engine, For TF 34 Engine

STANDARDS

Federal

FEd-STD-595	Colors

Military

MIL-STD-100	Engineering Drawing Practices
MIL-STD-129	Marking of Shipments
MIL-STD-130	Identification Marking of U.S. Military Property
MIL-STW454	Standard General Requirements for Electronic Equipment
MIL-STD-470	Maintainability Program Requirements (for Systems and Equipments)

Source: https://assist.dla.mil -- Downloaded: 2026-11-23T14:17Z
Check the source to verify that this is the current version before use.

STANDARDS (Continued)

Military (Continued)

MIL-STD-704	Aircraft Electric Power Characteristics
MIL-STD-785	Reliability Program for Systems and Equipment Development and Production
MIL-STD-810	Environmental Test Method
MIL-STD-831	Test Reports, Preparation of
MIL-STD-889	Disstiiliar Metals
MIL-S-1523	Age Control of Age Sensitive Elastomeric Material
MS33540	Safety Wiring and Cotter Pinning, General Practices for "
MS33666	Packing, Preformed - Aeronautical, Elastomeric, Range of Sizes
MS33668	Packing, Preformed, Elastomeric, Tube Fitting, Range of Sizes

PUBLICATIONS (Air Force-Navy Aeronautical Bulletins)

MIL-BULL-544	List of Specifications and Standards (Book Form)

PUBLICATIONS (Other)

SD-6	Provisions Governing Qualification (Qualified Products List)

(Copies of specifications, standards, drawings, and publications required by contractors in connection with specific procurement functions should be obtained from the procuring activity or as directed by the contracting officer.)

2.2 Other publications. The following documents form a part of this specification to the extent specified herein. Unless otherwise indicated, the issue in effect on date of invitation for bids or request for proposal shall apply.

Source: https://assist.dla.mil -- Downloaded: 2026-11-23T14:17Z
Check the source to verify that this is the current version before use.

AMERICAN NATIONAL STANDARDS INSTITUTE (ANSI)

B46. 1-1962 Surface Texture

(Application for copies should be addressed to the American Standards Institute, 1430 Broadway, New York, NY 10018.)

3. REQUIREMENTS

3.1 Specification sheets. The individual item requirements shall be as specified herein and in accordance with the applicable specification sheets. In the event of any conflict between requirements of this specification and the specification sheet, the latter shall govern.

3.1.1 Precedence. The contract shall have precedence over any specification. Any design or construction change that may effect compliance with this specification or from subsidiary specifications or standards, for a qualified valve, are subject to approval in writing by the qualifying activity (see 3.11.3).

3.2 Qualification. The valve furnished under this specification shall be a product which has been qualified for listing on the applicable Qualified Products List at the time set for opening of bids (see 4.2.9 and 6.4).

3.3 Dimensions. Each part shall conform to the dimensions shown on the specification sheet. Where only maximum or minimum dimensions are shown, the part need not have the shape shown, but the part, including all protrusions, shall be contained within the outline shown . Design details which are shown but are not specifically required are shown as examples and for information only; such details are optional.

3.4 Data. Unless otherwise specified in the contract, data cited in this specification is only required as part of the qualification submittal.

3.5 Materials and parts. Materials and parts used In construction of the valve shall be unaffected by aircraft engine oil while the valve is operating under any of the specified conditions. Materials, parts, and processes shall conform to applicable Government specifications listed in MIL-BULL-544. Contractor or industry specifications may be used for materials or processes not covered by the documents listed in.MIL-BULL-544, provided the specifications are approved by the qualifying activity and contain provisions for adequate tests.

3.5.1 Materials.

3.5.1.1 Toxic products. Materials which are toxic in themselves, or which become toxic when pulverized or vaporized, or which have toxic products of combustion, shall be used only upon written permission of the qualifying activity.

Source: https://assist.dla.mil -- Downloaded: 2026-11-23T14:17Z
Check the source to verify that this is the current version before use.

3.5.1.2 Non-metals. Non-metallic materials used, including plastics, fabrics, and protective finishes shall be flame-resistant, shall not support combustion, shall be moisture resistant, and shall not be adversely affected by weather, temperature, and ambient conditions.

3.5.1.2.1 Fungus resistance. Materials that are nutrients for fungi shall not be used where it is practical to avoid them, Where used, all nutrient materials and associated fungicidal treatments used shall be specified on the valve manufacturing drawings.

3.5.1.2.2 Elastomers. Elastomeric components shall be fabricated from materials covered by applicable specifications and shall have maximum practicable ozone and aging resistance and hydrolytic stability consistent with performance requirements. All elastomeric materials used shall be subject to the specific approval of the qualifying activity based upon the demonstrated suitability of the materials for the expected operating and storage environments. Age controls for synthetic rubber parts shall be in accordance with MIL-STD-1523.

3.5.1.3 Metals. All metals shall be compatible with the intended temperature, functional, service and storage conditions to which the valve will be exposed. Metals which are not protected from corrosion by lubricating oil shall be of the corrosion-resisting type, or shall be suitably treated to resist corrosion in accordance with 3.5.1.4.

3.5.1.3.1 Steels (except corrosion-resistant).

a. Aircraft quality, vacuum-melted steel shall be used for parts which are heat treated to an ultimate tensile strength 220,000 psi and above. Such applications shall be subject to specific approval by the qualifying activity.

b. The ultimate tensile strength range in production parts shall not exceed the following limits:

Minimum Ultimate Tensile Strength, P.S.I.	Permissible Variation, P.S.I
220,000	-o + 20,000
260,000	-o + 20,000
270,000	-o + 20,000
280,000	-o + 20,000

Source: https://assist.dla.mil -- Downloaded: 2026-11-23T14:17Z
Check the source to verify that this is the current version before use.

c. Preference shall be given, in selection of carbon and low alloy steels, to compositions having the least hardenability which will insure through-hardening of the part concerned.

d. Compositions shall be selected such that heat treatment to the required strength and service temperatures shall preclude temper embrittlement.

e. Steels shall be selected having ductile-brittle fracture transition temperatures as determined by impact test below the minimum operating temperature.

f. Steels whose mechanical properties are developed by cold deformation shall be so selected that the recovery temperature will be at least 50°F (10°C) above the maxumum operating temperature range.

g. Critical parts shall be designed and processed so as to result in no decarburization of highly stressed areas. Designs shall preclude use of as-forged surfaces unless specific approval is obtained from the qualifying activity.

h. The mechanical drilling of holes in martensition steels after hardening to strength levels of 180,000 psi and above shall be avoided whenever practicable. When such drilling is unavoidable, detailed information concerning the processes to be used shall be submitted to the qualifying activity for approval.

i. Any necessary straightening of parts after heat treatment to strength levels of 180,000 psi and above shall be accomplished at the tempering temperature, plUS (PF (-180c) minus 50~F (lO°C), or the parts shall receive a stress-relieving treatment at this temperature immediately after straightening. Parts shall be inspected for cracks after straightening.

j. Free-machining grades of steel shall be subject to approval by the qualifying activity.

3.5. 1.3.2 Corrosion-resistant steels. The following limitations shall be observed in the selection and application of corrosion resistant steels.

a. Unstabilized austenitic steels shall not be fusion welded.

Source: https://assist.dla.mil -- Downloaded: 2026-11-23T14:17Z
Check the source to verify that this is the current version before use.

b. Precipitation hardening semi-austenitic grades shall not be used in applications which require extended exposure to temperatures in the 750° -900°F (399° -482°C) range.

c. The use of heat treated 431 or 19-9DL steel shall be subject to approval by the qualifying activity.

d. The use of 17-4PH stainless steel aged below H1025 shall be subject to approval by the qualifying activity.

3.5.1.3.3 Magnesium alloy. Magnesium or its alloy shall not be used.

3.5.1.3.4 Castings. Castings shall be in accordance with MIL-C-6021 and shall be classified Class lB, grade C or higher. Aluminum alloy castings shall be in accordance with MIL-A-21180. Defects not materially affecting the suitability of the castings may be repaired at the foundry or during machining by peening, impregnation, welding, or other methods acceptable to the procuring activity. Inspection of repaired castings shall be governed by quality control techniques subject to the approval of the qualifying activity.

3.5.1.3.5 Stress corrosion embrittlement factors. To prevent premature failures caused by stress corrosion or hydrogen embrittlement, the design and method of manufacture *of parts of titariiiim and steel* heat-treated to tensile strengths above 220,000 psi or of bare high strength aluminum alloys and the techniques by which they are assembled and installed shall be such that sustained or residual surface tensile stresses and stress concentrations are minimized. Practices, such as: the use of press or shrink fits; taper pins, clevis joints in which tightening of the bolt imposes a bending load on the female lugs; and straightening or assembly operations; which result in sustained or residual surface tensile stresses shall be avoided. In cases where such practices cannot be avoided, corrective practices such as stress relief heat treatment, optimum grain flow orientation, peening (shot or rotary flat) or similar surface working shall be used to minimize the hazard of stress corrosion or hydrogen embrittlement damage. In no case shall sustained or residual surface tensile stresses in these materials exceed 50% of the material specification minimum yield strength in the longitudinal grain flow direction, 35% of the minimum yield strength in the long transverse direction and 15% of the minimum yield strength in the short transverse direction, except that for materials of demonstrated high resistance to stress corrosion cracking, such as 7075-T73 aluminum

Source: https://assist.dla.mil -- Downloaded: 2026-11-23T14:17Z
Check the source to verify that this is the current version before use.

alloy, such stresses My be as high at 75% of the minimum yield strength in any grain flow direction. These limits for stresses represent the algebraic sum of all the continuous tension and compression surface stresses resulting from any source such as quenching, forming and assembly. The use of cadmium in contact with or plated on titanium shall not be permitted.

3.5.1.3.6 Fatigue factors. To prevent premature failures caused by repeated loads, the design and method of manufacture, including consideration of the damaging effect of decarburization and certain metallic coatings, of all critical parts and the techniques by which they are assembled and installed shall be such that sustained or residual tensile stresses and stress concentrations are minimized. Practices such as cold straightening, cold forming, and the assembly of mismatched surfaces, which result in sustained or residual surface tensile stresses shall be avoided. In cases where such practices cannot be avoided, corrective practices such as stress relief heat treatment, optimum gain flow orientation, peening (shot or rotary flat) or similar surface working shall be used to minimize premature fatigue failure. In no case shall parts of nonuniform section be cold formed unless the contractor can demonstrate with test results that required fatigue resistance is obtained.

3.5.1.3.6.1 Surface finish. Surface roughness (as defined in ANSI B46.1-1962) and the incidence, location and size of allowable flaws in metallic parts subject to repeated loads, wherein stress concentration factors are governing, shall be demonstrably consistent with the design fatigue life of the parts in the planned operating environment. Surface roughness limits and limiting criteria for allowable flaws shall be established for approval by the qualifying activity. Alternately the surface roughness shall not exceed 63 RHS and there shall be no flaws such as tool marks deeper than 0.0002 inch. Such limits for parts critical in low cycle fatigue shall be separately identified.

3.5.1.3.7 Heat treatment. Heat treatment of aluminum alloys shall be in accordance with the material specification and lfIL-H-6088. Steels shall be heat treated in accordance with the material specification and KIL-H-6875. Precautions shall be taken to minimize warpage during heat treatment. Steel parts which require straightening after hardening to 200,000 psi or below may be cold straightened provided a stress relieving heat treatment is subsequently applied.

Straightening of parts hardened to tensile strengths above 200,000 psi shall b~&complished at a temperature within the range from the tempeting temperature to SOoF (lO~C) below tempering temperature.

Source: https://assist.dla.mil -- Downloaded: 2026-11-23T14:17Z
Check the source to verify that this is the current version before use.

3.5.1.3.8 Welding. Welding joints shall be in accordance with applicable welding specifications. Welded assemblies involving steels and section sizes which transform on air cooling to microstructure other than martensite shall be normalized or otherwise processed to equivalent hardness in the weld areas. When welding air hardening steels, appropriate precautionary measures, including preheating interpass temperature control and post heating shall be applied.

3.5.1.3.8.1 Stress corrosion. To avoid the possibility of stress corrosion and fatigue damage in welded primary structural components, the structures shall be so designed that the weld bead material is accessible for machining during manufacture. In addition, welded primary structural components shall be stress relieved after all welding is completed.

3.5.1.3.9 Corrosion protection. Metals which do not possess . adequate corrosion-resisting characteristics shall be protected to resist corrosion from dissimilar metal combinations, moisture, salt spray and high temperature deterioration as applicable. The protection of the equipment from corrosion shall be in accordance with MIL-F-7179. Dissimilar metals in immediate contact shall be avoided. Where use of dissimilar metals in immediate contact cannot be avoided they shall be insulated. This has particular reference to dissimilar metal contacts defined in MIL-STD-889. All metal joints and other contact areas shall be designed or protected to prevent fretting corrosion damage of affected areas. The following factors will be used in the evacuation of the resistance of the equipment to corrosion. Any corrosion that causes the following shall be deemed sufficient cause for rejection.

a. Malfunctioning of the equipment
b. Shortening of life
c. Impairment of use
d. Impairment of ease of replacement of parts

3.5.1.4 Finish.

3.5.1.4.1 Aluminum alloy parts. Unless otherwise specified by the qualifying activity, aluminum alloy parts shall be anodically treated in accordance with MIL-A-8625. In the absence of abrasive conditions and with the approval of the qualifying activity, they may be coated with chemical film in accordance with MIL-C-SS41. The film deposited by this treatment shall be removed from contact areas required to act as a path for electrical current.

Source: https://assist.dla.mil -- Downloaded: 2026-11-23T14:17Z
Check the source to verify that this is the current version before use.

3.5.2 Parts.

3.5.2.1 Standard parts. Military standard parts shall be used whenever they are suitable for the purpose, and shall be identified by their military part number. All parts of the same part number shall be interchangeable as applied within the system. Commercial utility parts such as screws, bolts, nuts, and cotter pins may be used provided they possess suitable properties and are replaceable by the standard parts (MS and AN) without alteration and provided the corresponding standard part numbers are referenced in the parts list and on the manufacturer's drawings. In the event there is no suitable corresponding standard part in effect on date of invitation for bids, commercial parts may be used provided they conform to all requirements of this specification.

3.5.2.2 Threaded parts.

3.5.2.2.1 Straight screw threads. Screw threads shall conform to the requirements of MIL-S-8879 except for electrical connections, fluid fittings and ground and cut threads incorporated in proprietary parts which do not have equivalent standards. All exceptions shall conform to MXL-S-7742.

3.5.2.2.2 Tapered pipe threads. Tapered pipe threads shall be in accordance with MIL-P-7105 and may be used only for permanently plugging drilled or cored openings.

3.5.2.2.3 Threaded inserts. All threaded connections in nonferrous materials shall have steel inserts which are suitably protected from electrolytic corrosion.

3.5.2.2.4 Safetying Provisions shall be made to prevent all screws and screw parts from accidental loosening. Such parts shall be safety wired or fitted with safety stop nuts, where applicable. All other connections liable to be loosened by vibration shall be safetied in a similar manner. If safetying is by wiring, it shall be in accordance with MS33540. The use of lock nuts which incorporate nonmetallic inserts as a locking feature shall be avoided.

3.5.2.3 Packings. All packings shall be in accordance with the requirements of MS33666 or MS33668.

3.5.2.4 Filter. If filters are required, they shall be self-cleaning and shall be sized to protect the valve from the contamination required in 4.5.9. Any filter used shall be readily removable for replacement without disassembly of the valve.

3.5.2.5 Snapring retainer. The use of snapring retainers is prohibited unless failure of the retainer will not affect operation adversely or allow retainer fragments to enter the air passages.

Source: https://assist.dla.mil -- Downloaded: 2026-11-23T14:17Z
Check the source to verify that this is the current version before use.

3.6 General design and construction requirement. The valve shall conform to the applicable specification sheet. (For example see MIL-V-81995/1, MIL-V-81995/2, MIL-V-81995/3, and MIL-V-81995/4.)

3.6.1 Acceptable design. The valve shall be suitable for operational use with an engine starter utilizing a pneumatic energy source, and Its design shall be amenable to production processing methods. Design of each unit shall be consistent with good aircraft accessory practices. Careful consideration shall be given in the design of the . unit to simplify servicing. inspection (testing), and overhaul. The necessity of using special tools and fixtures for maintenance and overhaul shall be kept to a minimum.

3.6.2 Interchangeability. Each article of the same part number manufactured in accordance with this specification shall be physically and functionally interchangeable with articles bearing the same contractor part number.

3.6.3 Components. The valve shall consist of a mechanism (such as a butterfly) for controlling airflow through the valve, a pneumatic pressure regulating or on-off actuating power device, a solenoid-operated pilot valve for control of the actuator, and position indicators.

3.6.4 Fail-safe features. The valve shall automatically close in the event of loss of electric power or pneumatic energy source.

3.6.5 External openings. All air vents or case openings shall be protected by suitable means against passage of round objects of 3/16-inch or greater in diameter.

3.6.6 Adjustments. No external adjustment means shall be provided and no adjustments shall be required during installation of the valve. All adjustments are to be made at the time of manufacture or overhaul. If devices for making adjustments are installed within components, suitable locking and sealing means shall be provided to indicate when an unauthorized adjustment has been made.

3.6.7 Drainage. The valve shall incorporate provisions for drainage or be designed to prevent water from accumulating within the unit. Drainage shall be such that any condensed or accumulated water will not cause malfunction or delay in operation if frozen.

3.6.8 Direction of flow. The direction of airflow through the valve shall be prominently and permanently marked on the valve housing.

3.6.9 Pneumatic bleed. The source of air pressure used to actuate the valve shall be integral with the valve and shall be located on the upstream side of the valve. Bleed ports and passages shall be as large as is practical to preclude blockage by contamination.

Source: https://assist.dla.mil -- Downloaded: 2026-11-23T14:17Z
Check the source to verify that this is the current version before use.

3.6.9.1 Continuous bleed. If the valve Incorporates any requirement for continuous bleed, the amount of flow from the valve shall be considered as a part of the total valve leakage as defined in 3.7.4.

3.6.10 Electrical requirements. The valve shall meet the requirements of this specification with electric power from a 28-volt dc system conforming to MIL-STD-704. Steady-state operating or holding current of the unit shall not exceed 3 amperes.

3.6.10.1 Connectors. Electric connectors shall be in accordance with MIL-C-5015. Provisions for lockwiring the connector plug shall be incorporated at the electric receptacle.

3.6.10.2 Internal electric connections. Internal connections shall be made in accordance with MIL-E-5400 and MIL-STD-454.

3.6.11 Position indicator. The valve shall be equipped with an external position indicator which shall include suitable markings to indicate valve "open" and "close" positions. In addition, an electric switch shall be provided to operate an indicator light when the valve is more than 3 degrees open.

3.6.12 Color. Equipment shall be finished in a color conforming to FED-STD-595 color number 17875 except that as an alternate engine mounted components may be finished resulting in an aluminum or stainless steel color. The finishes shall be unaffected by environmental testing required by this specification.

3.6.13 Lubrication. The valve shall not require lubrication.

3.6.14 Weight. The weight of the valve shall not exceed the value specified on the specification sheet.

3.7 Performance. The valve performance shall meet the operating requirements specified herein for any valve attitude. All performance data shall be based upon the use of production hardware. Valve manufacturers shall furnish performance data on each model valve they propose to have qualified in accordance with the requirements of 4.2.1 herein. The data shall be in the form shown on Table I, and may be estimated or calculated until the valve has been tested. After that time, performance data shall be based on test results.

3.7.1 Valve operation. The valve shall be normally closed, electrically and pneumatically operated open and pressure regulating. The valve shall remain open as long as pneumatic pressure is maintained and the electric circuit is energized. The valve shall close automatically in the event of loss of electric power or pneumatic energy.

Source: https://assist.dla.mil -- Downloaded: 2026-11-23T14:17Z
Check the source to verify that this is the current version before use.

Table 1. Qualification sample data summary sheet

Item No.	Data	Recorded Value	Specification Requirement
1.	Date		
2.	Serial number of valve		
3.	Military part number of valve		
4.	Ambient temperature (°F/°C)		
5.	Barometric pressure (In. Hg Abs)		
6.	Weight of valve		
7.	Results of dielectric test		
8.	Continuous trace of pressure rise vs time at maximum inlet condition seconds)		
9.	Opening time at minimum inlet condition (seconds)		
10.	Regulated pressure if applicable (psia)		
11.	Inlet air total pressure (psia)		
12.	Inlet air total temperature (°F°C)		
13.	Internal leakage (pounds per minute)		
14.	Total leakage (pounds per minute)		

3.7.1.1 Open-closing time and regulation. The valve shall meet the opening and closing time requirements, and shall regulate to the pressure specified in the specification sheet, under the conditions specified in the specification sheet, when tested in accordance with 4.5.1 and 4.5.3.

3.7.2 Duty cycles. The valve shall be capable of continuous duty cycles as specified in the specification sheet and over the ambient temperature range specified therein.

3.7.3 Pressure drop. The valve pressure drop shall not exceed that specified in the specification sheet when tested in accordance with 4.6.17.

3.7.4 Leakage. Total leakage (internal plus external) shall not exceed the limits specified in the specification sheet, when subjected to the test specified in 4.5.4.

3.7.5 Proof and minimum burst pressure. The valve shall meet the operational requirements of this specification and shall not be damaged or permanently deformed after having been subjected to a proof pressure equal to two times the maximum pressure specified in the specification sheet applied at the inlet port with the valve in both the open and closed positions and while at maximum temperatures. Minimum burst pressure shall be 1-1/2 times the proof pressure.

Source: https://assist.dla.mil -- Downloaded: 2026-11-23T14:17Z
Check the source to verify that this is the current version before use.

3.7.6 Operating service time. Equipment shall operate for a minimum of 10,000 cycles to overhaul without maintenance other than inspection.

3.7.7 Performance curves. The valve performance shall be defined by the following curves which shall be submitted with the qualification sample valves.

3.7.7.1 Maximum pressure rise. Curves showing the maximum pressure rise versus time at each specified inlet condition at sea level.

3.7.7.2 Maximum peak pressure. Curies showing maximum peak pressures and regulated pressures (with allowable tolerance limits) for a minumum of six inlet pressures greater than the regulated pressure.

3.7.7.3 Pressure vs. altitude and temperature. Curves showing variations in pressure rise time and regulated pressure with altitude and temperature.

3.7.8 Altitude. The valve shall meet the requirements of this specification from sea level to the maximim valve operating altitude specified on the specification sheet. Exposure to the maximum operational altitude specified on the specification sheet during nonoperating periods under any environmental condition(s) shall not cause the valve to open.

3.7.9 Temperature. The valve shall meet the requirements of this specification over the ambient temperature range specified on the specification sheet.

3.7.10 Acceleration forces. While mounted rigidly during nonoperating periods, valves shall be capable of withstanding nonvibratory linear acceleration forces of 25 g applied at the valve center of gravity in any direction, without structural damage. Valves shall be capable of normal operation after exposure to this force.

3.7.11 Vibration. Valves shall be designed to meet the vibration test requirements specified in 4.5.6 and on the specification sheet.

3.8 Installation.

3.8.1 Installation drawing. The manufacturer’s installation drawing shall be approved by the qualifying activity and will form a part of the qualification test report. Manufacturers interested in qualifying valves to this specification shall coordinate installation with the qualifying activity prior to fabrication of qualification units.

Source: https://assist.dla.mil -- Downloaded: 2026-11-23T14:17Z
Check the source to verify that this is the current version before use.

3.8.2 Air inlet and outlet connections. The valve connections shall be as described on the specification sheet.

3.8.2.1 Mechanical loads and moments. Valve air inlet and outlet flanges shall be capable of withstanding the loads and moments as specified in the specification sheet.

3.8.2.2 Air inlet pressure loads. The valve air inlet flange shall be capable of withstanding the tensile load resulting from the maximum air pressure specified on the specification sheet when the valve is closed.

3.8.2.3 Extraneous loads and moments. The starter air inlet flange shall be capable of withstanding, simultaneously, the acceleration forces defined in 3.7.1.1, the tensile load defined in 3.8.2.2, and the mechanical loads and moments defined in 3.8.2.1.

3.9 Reliability and maintainability.

3.9.1 Reliability Program. The manufacturer shall prepare a proposed reliability program plan for the valves in accordance with MIL-STD-785 and shall submit it to the Qualifying Activity. Qualification approval will not be granted to a product until a reliability program for the product has been approved by the Qualifying Activity, in addition to the product's passing the Qualification tests specified herein.

3.9.2 Maintainability Program. The manufacturer shall prepare a proposed maintainability program plan for the valves in accordance with MIL-STD-470 and shall submit it to the Qualifying Activity. Qualification approval will not be granted to a product until a maintainability program for the product has been approved by the Qualifying Activity, in addition to the product's passing the Qualification tests specified , herein.

3.10 Marking.

3.io.l Identification of product. Equipment, assemblies, and parts shall be marked as specified in Standard MIL-STD-130. Valves shall be marked with the following information:

VALVE, STARTER CONTROL, AIRCRAFT ENGINE, MODEL _____
Specification: MIL-V-81995(AS)
M81995/*
Manufacturer's part number _____ **LESS ISSUE _____
Manufacturer's serial number _____
Government order or contract number _____
Federal stock number _____

NOTES : * Complete the part number by inserting applicable specification sheet slash number
** For use by Naval Air Rework Facilities.

Source: https://assist.dla.mil -- Downloaded: 2026-11-23T14:17Z
Check the source to verify that this is the current version before use.

3.10.2 Marking of product. The military part number shall not be used by the manufacturer on a valve until notification has been received in writing from the qualifying activity that the valve has been approved for use on Navy aircraft.

3.10.3 Marking of parts. Each part and assembly shall be marked with its part number and drawing revision symbol where applicable, which shall be the same as the drawing number, except the following:

3.10.3.1 Those parts which do not have a suitable or sufficient surface for a part number.

3.10.3.2 Those parts which are permanently assembled by welding, brazing, soldering, or riveting shall carry the assembly part number.

3.10.4 Part number. The part number shall, when practicable, be located to permit its being read after assembly of the complete unit. The marking shall be such that it will not be effaced as a result of service usage during the life of the part.

3.11 Part number and parts list.

3.11.1 Part numbers. Valve part numbers are not to be coded to describe part characteristics and shall be limited to a maxium of 10 digits or characters. All parts shall be marked with the latest drawing revision letter or number to which the part was made.

3.11.2 Parts list. A parts list is a tabulation of the items necessary to fabricate or assemble the valve to which the list applies. The parts list for the valve which is granted qualification approval based on (1) the satisfactory completion of the qualification tests and (2) the approval of the qualification test detail inspection and test report by the qualifying activity shall constitute the approved parts list for any subsequent valve of the same model to be delivered to the Government. All parts shall be marked directly with an identification number and the vendor or fabrication source of that particular part, unless othewise specified in the parts list. The contractor shall assign an item configuration control number to the valve configured by the approved parts list, and this number together with the approved parts list shall be continuously updated to reflect the incorporation of Class I or Class II engineering changes approved by the qualifying activity. This item configuration control number will be used to identify the valves to be delivered and will also be used for final acceptance. The approved parts list shall be prepared in accordance with Chapter 3 of MIL-STD-100 and this list shall also show the latest drawing revision letter or number used to manufacture the part incorporated in the valve at the time of acceptance. The use of the so-called “clip system” of attaching engineering change forms to the applicable drawing in lieu of showing the change(s) in the body of the drawing will not be permitted.

Source: https://assist.dla.mil -- Downloaded: 2026-11-23T14:17Z
Check the source to verify that this is the current version before use.

3.11.3 Design and construction changes.

3.11.3.1 Changes in design. No changes shall be made in the design or materials of a valve that has been qualified in accordance with this specification, except when the changes are approved by the qualifying activity.

3.11.3.2 Changes in part numbers. Part number changes shall be controlled in accordance with 1-302.14 of MIL-STD-100.

3.11.3.3 Changes in the parts list. Changes to the approved parts list shall be governed by the requirements specified in 3.11.3.2.

3. 11.3.4 Changes in vendors. Changes in a vendor or fabrication source of those parts used in the qualified valve shall be in accordance with the following procedure: The manufacturer shall prepare and submit to the qualifying activity a list of tests to demonstrate that the valve meets all specification requirements for an alternative vendor source. The specific tests required to substantiate an alternate vendor as a supplier of a valve part shall be defined. The fabrication source of selected vendor components will be included in this list. The list shall be subject to approval by the qualifying activity. The contractor thereafter shall be responsible for insuring that all parts, components, and assemblies on the substantiation list comply with the qualified fabrication source, and that any changes to those sources are effectively controlled. The contractor shall be responsible for performance of substantiation tests to establish satisfactory alternate vendors or fabrication sources. A fabrication source is defined as the prime physical source producing the part, component, or assembly. Changes of fabrication location, such as to another plant of an individual vendor, shall be construed as a change of fabrication source.

3. 11.3.5 Responsibility for changes. Approval by the qualifying activity of changes to the qualification test valve does not relieve the manufacturer of full responsibility for the results of such changes on any valve characteristic.

4. QUALITY ASSURANCE PROVISIONS.

4.1 Responsibility for inspection. Unless otherwise specified in the contract, the contractor is responsible for the performance of all inspection requirements as specified herein. Except as otherwise specified in the contract, the contractor may use his own or any other facilities suitable for the performance of the inspection requirements specified herein, unless disapproved by the Government. The Government reserves the right to perform any of the inspections set forth in the specification where such inspections are deemed necessary to assure supplies and services conform to prescribed requirements

Source: https://assist.dla.mil -- Downloaded: 2026-11-23T14:17Z
Check the source to verify that this is the current version before use.

4.1.1 Classification of tests. Inspection and testing shall be classified as follows:

a. Qualification tests. Qualification tests are those tests accomplished on equipment submitted for qualification as a satisfactory product.

(1) Retention of qualification. Retention of qualification shall consist of a periodic verification to determine compliance of the qualified product with the requirements of this specification (see 3.2 and 4.2.2.1).

b. Quality conformance inspection.

(1) Individual inspection. Individual inspection tests are those tests accomplished on each equipment manufactured and submitted for acceptance under a production contract (see 4.5.20).

(2) Sampling tests. Sampling tests are those tests conducted on production samples to verify that the design is identical to that qualified and that production units meet all the requirements of this specification, and applicable specification sheet.

4.2 Qualification. Equipment will be considered qualified and placed in the Qualified Products List if qualification test samples (as defined below) successfully complete the qualification tests designated by Table II in the order listed and upon acceptance by the qualifying activity of a reliability and maintainability program plan. Equipment will be retained on the Qualified Products List as long as the sampling tests samples are delivered as required below (4.2.3), and if these samples are of the originally qualified configuration with authorized changes incorporated and if these samples continue to demonstrate conformance to the applicable detailed specification.

4.2.1 Qualification test samples. The qualification test sample shall consist of: (a) three units as described by the specification sheet which have successfully completed the tests of Table II; (b) a mating plug for each electric connector, used on each of the three units; (c) the test report described in 4.2.6; (d) two sets of component wiring diagrams, outline drawings, detail assembly drawings with parts list, and operating instructions. Sample unit No. 1 shall be instrumented by the manufacturer to permit the measurement of the critical component temperatures. The instrumentation used and the location of the temperature measuring points shall be subject to approval of the qualifying activity. The temperature at these points shall be monitored throughout the qualification tests of Sample No. 1.

Source: https://assist.dla.mil -- Downloaded: 2026-11-23T14:17Z
Check the source to verify that this is the current version before use.

Table II. Test plans

Test paragraph		Qualification test and sample number			Individual inspection tests	Sampling tests
Number	Title	1	2	3		
4.5.1	Calibration	x	x	x		x
4.5.2	Cycling and endurance	x				x
4.5.3	Opening-closing time	x	x	x		x
4.5.4	Leakage	x	x	x		x
4.5.5	Proof pressure	x	x	x		x
4.5.6	Vibration		x			x
4.5.7	Recalibration	x	x	x		x
4.5.8	Teardown and inspection	x	x	x		x
4.5.9	Dust	x				
4.5.10	Rain		x			
4.5.11	Low temperature			x		x
4,5.12	Fungus	x				
4.5.13	Salt fog		x			
4.5.14	Humidity			x		
4.5.15	High temperature	x				x
4.5.16	Dielectric strength	x	x	x		
4.5.17	Pressure drop	x	x	x		x
4.5.18	External load	x	x	ii		
4.5.19	Burst pressure	x	x	x		
4.5.20.1	Examination				x	
4.5.20.2	Dielectric strength				x	
4.5.20.3	Proof pressure				x	
4.5.20.4	Cycling				x	
4.5.20.5	Actuation				x	
4.5.20.6	Leakage				x	

Each qualification test sample shall be plainly identified by securely attached tags clearly and durably marked with the following information, and shall be forwarded to the Commanding Officer, Naval Air Propulsion Center, Attn: PE-62 Trenton, New Jersey 08628, after obtaining authorization from the qualifying activity for submittal of the qualification test samples:

(a) Sample for Qualification Test
Submittal by (name) (date) for qualification test in accordance with the requirements of Specification MIL-V-81995(AS) (date) under authorization (reference letter authorizing tests).

(b) Valve: Starter Control, Aircraft Engine
Manufacturer's Part Number
Name of Manufacturer
Specification Sheet Model or other identification
Navy Work Unit Assignment Number

Source: https://assist.dla.mil -- Downloaded: 2026-11-23T14:17Z
Check the source to verify that this is the current version before use.

4.2.2 Retention. The retention of qualification shall consist of certification by the manufacturer to demonstrate compliance of the qualified valve with the requirements of this specification. Certification shall be signed by a responsible official of management, attesting that the listed product(s) is still available from the listed plant, can be produced under the same conditions as originally qualified; i.e., same process, materials, construction, design, manufacturer's part number, or designation; and meets the requirements of the current issue of the specification. Certification shall be conducted at intervals not exceeding 2 years.

4.2.3 Sampling tests. Each equipment of the same part number delivered as a qualified item under this specification shall be numbered sequentially in essentially the order that it is submitted for government acceptance regardless of the contract under which delivered or by whom purchased provided the valve is for government use. Each qualified manufacturer shall maintain his own sequential numbering system. To meet the delivery requirement for the first 50 components, 51 components must successfully complete the required individual tests; 50 of which are to be shipped as directed by the applicable contract(s); and one component selected at random by the Government Inspector is to be forwarded to the activity specified in 6.2.1. To meet the delivery for each succeeding 150 components, 151 components must successfully complete the required individual test, 150 of which are to be shipped as directed by the applicable contract, and one component selected at random and forwarded as above. The span of serial numbers of the production units from which each sampling test sample was selected shall be recorded and this information included with the sample. The sample shall be shipped no later than the final unit in the production group from which selected. The units forwarded to activity specified in 6.2.1 for government acceptance will be inspected and examined for conformance to the applicable specification sheet. Tests will be conducted as shown by Table II. The sample unit will be returned to the contractor with a report of the government test results at the conclusion of the tests. Delivery of production units successfully passing the individual tests are to be accepted unless qualification is officially rescinded. Shipping authorization and instructions are to be given by the cognizant Government Inspector when the sample unit is selected.

4.2.4 Rejection and retest of qualification and sampling tests samples. Samples which have been rejected or returned to the manufacturer for any reason during qualification, retention of qualification or sampling tests, may be reworked or have parts replaced to correct defects. Before resubmitting the samples, full particulars concerning the rejection and the corrective action taken by the manufacturer must be submitted in writing by the manufacturer to the qualifying activity. Tests shall not be resumed until such a report is received. Where qualification tests are conducted under the auspices of the manufacturer, the qualifying activity will be advised upon failure of a qualification sample and of the action taken by the manufacturer with regard to failure.

Source: https://assist.dla.mil -- Downloaded: 2026-11-23T14:17Z
Check the source to verify that this is the current version before use.

If the manufacturer does not correct and return components rejected during sampling testing within thirty days after he receives them from the qualifying activity or does not submit a program acceptable to the qualifying activity for the correction of deficiencies noted within fifteen days, the component will be disqualified.

4.2.5 Disassembly and inspection. At the conclusion of tests, each sample will be disassembled as necessary to inspect for wear, defects, and overheating.

4.2.6 Test report. A qualification test report is required and shall be prepared in accordance with MIL-sTD-831.

4.3 Individual inspection. Each unit produced under this specification will be accepted if:

a. Qualified to this specification in conformance to 4.2.

b. Individual tests of Table II are successfully completed.

c. Installation instructions approved by the qualifying activity are securely attached to each system component in such a way that they need not be removed for check out of the component pAAW. -w A-u ..t.tlnt+nn ~g ~hp airrr$lft.

4.3.1 Relection and retest of units submitted for individual inspection. Units that have been rejected may be reworked or have parts replaced to correct the defects and resubmitted for Individual inspection. Before resubmitting, full particulars concerning previous rejection and the action taken to correct the defects found in the original shall be furnished the Government Inspector.

4.4 Test conditions. Unless othewise specified in this specification and the specification sheet, all tests shall be conducted at an ambient temperature range of 50° -120°F (10° -49°C), at rated air inlet conditions as specified on the specification sheet, and with the exhaust conditions at the prevailing laboratory atmospheric pressure.

4.4.1 Test apparatus.

4.4.1.1 Airflow. Airflow measurements shall be made using a flowmeter conforming to ASME report: Fluid Meters, Their Theory and Applications, Sixth Edition.

Source: https://assist.dla.mil -- Downloaded: 2026-11-23T14:17Z
Check the source to verify that this is the current version before use.

4.4.1.2 Temperature. All temperature measurements shall be reported in degrees Fahrenheit and Celsius with an accuracy of +5°F and +30C .

4.4.1.3 Pressure. All air and gas pressures shall be reported in inches of mercury absolute or pounds per square inch absolute and shall be accurate within +1 percent.

4.4.2 Instrumentation. Instrumentation shall be provided during qualification and quality conformance tests to observe or determine the following values:

a. Airflow
b. Inlet air total pressure
c. Inlet air total temperature
*d. Outlet air total pressure
*e. Outlet air static pressure
*f. Outlet air total temperature

*NOTE : These items need not be instrumented during the individual inspection test unless specifically required to determine acceptable performance.

4.5 Tests.

4.5.1 Calibration. The valve shall be subjected to four cycles at each of the following inlet air conditions:

Pressure	Temperature	Flow
Rated	Rated	Rated
Maximum	Rated	Rated
Minimum	Rated	Rated
Maximum	Maximum	Rated
Rated	Maximum	Rated

Two cycles at each condition shall be conducted using 21 volts do and two cycles using 28 volts do applied to the valve electrical connector. Inlet pressure and temperature limits shall be + 1 psia and + 15°F (±8°C) . Airflow through the valve shall be controlled by an-orifice or nozzle downstream as defined in the specification sheet. Individual test valves shall be rejected if performance is not within the limits defined in the specification sheet for regulating pressure. In addition, it shall be demonstrated that the valve will open (timing requirements need not be met) with rated inlet conditions and 12 volt do power.

Source: https://assist.dla.mil -- Downloaded: 2026-11-23T14:17Z
Check the source to verify that this is the current version before use.

4.5.2 Cycling and endurance. Including the calibration cycles, the valve shall be subjected to a total of 10,000 endurance cycles at the conditions specified in Table III. Airflow through the valve shall be controlled as specified in 4.5.1 and electric power shall be 28 volts do The valve shall remain in the open and closed positions for a minimum of 5 seconds during each cycle throughout this test except during period II when the cycling rate shall be 60 seconds open followed by 60 seconds closed and during period III when the cycling rate shall be 2 minutes open followed by 5 minutes closed. Data shall be recorded to first, midway and last cycle during each period of testing to show compliance with the opening and closing the requirements of this specification, (see 4.5.3) and internal and total leakage shall be measured (see 4.5.4) after every period. Failure of the valve to meet operation and leakage requirements throughout the test shall be cause for rejection.

Table 111. Endurance cycles

PERIOD	TIME (SEC) ON	TIME (SEC) OFF	NO. OF CYCLES	INLET AIR CONDITION	TEMPERATURE
I	5	5	2500	Max Pressure and Rated Temperature	Ambient
II	60	60	900	Max Temperature and Rated Pressure	Maximum Operating
111	120	300	100	Max Temperature and Max Pressure	Maxi.mum Operating
Iv	5	5	5000	Rated Temperature and Rated Pressure	Ambient
v	5	5	1500	Max Temperature and Interbreed Pressure	Maximum Operating

4.5.3 Opening-closing time. With the inlet side of the valve pressurized to any inlet condition specified in the specification sheet, the valve shall move from the full closed position to the required regulating position, when the electrical circuit to the valve is energized within the time specified in the specification sheet. With the valve inlet pressurized to the maximum pressure inlet condition, the rate of pressure rise shall not exceed that specified in the specification sheet at any ambient temperature or inlet air conditions within its operating range. Zero time is considered to be coincident with actuation of the switch which either energizes or deenergizes the control circuit. The valve electrical circuit shall be deenergized and the closing time shall be within the time specified in the specification sheet.

Source: https://assist.dla.mil -- Downloaded: 2026-11-23T14:17Z
Check the source to verify that this is the current version before use.

4.5.4 Leakage. With the valve in the closed position and with upstream air pressure and temperature specified in the specification sheet, internal air leakage from the inlet port to the outlet port and total leakage (internal plus external) shall not exceed the limits specified in the specification sheet.

4.5.5 Proof pressure. With the valve in the closed position and the outlet port open to atmospheric pressure, an air pressure equal to two times the maximum inlet air pressure as specified in the specification sheet, shall be applied to the inlet port of the valve for a period of 10 minutes. This test shall be repeated except that the valve shall be in the open position and the outlet port shall be capped. Following these tests, the valve shall function properly and leakage shall not exceed the values specified in the specification sheet.

4.5.6 Vibration. The vibration test shall be conducted in accordance with the method and procedure as follows:

4.5.6.1 Method. The valve shall be tested as a complete assembly. Before and after this test, a calibration shall indicate that no component subject to calibration has changed its calibration beyond the design tolerance range. All components not subject to calibration shall be operated and shall not have had any part of their function impaired by the test.

4.5.6.2 Procedure. The following procedure shall apply:

4.5.6.2.1 Test installation. The valve shall be mounted on a test fixture to simulate aircraft installed position. If the aircraft installation requires that the starter control valve be mounted directly on the pneumatic inlet flange of the starter, the vibration test shall be conducted with the applicable control valve mounted on a test fixture simulating the starter as in the aircraft installation. To more closely simulate the aircraft installation, the aircraft pneumatic duct may be attached to the valve and supported as in the aircraft. If the starter control valve is mounted remotely in the aircraft installation, the valve shall be vibrated as a separate unit. The test fixture shall be as rigid as possible and designed to eliminate or minimize fixture resonances in the test frequency range. The test configuration shall be such that rotational motion of the fixture is not induced due to any unsymmetrical weight or stiffness distribution of the equipment. Measurements of vibratory accelerations or displacements shall be made at the mounting base of the valve. All frequency measurements shall be accurate within +5 percent. All displacement or acceleration measurements shall be accurate within + 5 percent. The motion of the vibrator table shall be simple harmonic motion with not more than 10 percent distortion.

Source: https://assist.dla.mil -- Downloaded: 2026-11-23T14:17Z
Check the source to verify that this is the current version before use.

4.5.6.2.2 Frequency scan. The equipment shall be vibrated with essentially simple harmonic motion in each of three mutually perpendicular directions to explore for resonant frequencies of component parts over the ranges or frequencies required in the specification sheet. Frequency scans shall be made very slowly and carefully. The frequency range shall be broken into small convenient intervals and each interval scanned at a constant applied force amplitude which produces approximately the fixture displacement or acceleration amplitude defined in the specification sheet. The fixture motion shall be observed closely during the frequency scans to detect the frequencies of minimum fixture motion which defines the frequencies at which major components of the unit are in resonance. These frequencies are quite sharply tuned and do not necessarily coincide with the frequencies at which maximum component amplitudes or noises occur when scanning at constant applied force amplitude. When the resonant components are small, the reduction of fixture motion at resonance may not be discernible, in which case the resonant frequencies may be determined from observations of maximum component amplitudes or noises, phase shift between fixture motion, and motion of a resonant part. In all cases the resonant frequencies shall be verified, if possible, by checking for minimum fixture motion. The test report must contain complete descriptions of all resonances, including the resonant frequencies, parts in resonance, and modes of vibration.

4.5.6.2.3 Resonance endurance tests. After completion of the frequency scan, resonance endurance tests shall be conducted at all resonant frequencies of the components, with the applied force adjusted as necessary to obtain the applicable fixture displacements or accelerations specified in the specification sheet." The vibrator and power supply must produce the prescribed fixture motions at all frequencies. Endurance tests shall not be conducted at any frequency at which the fixture amplitude abruptly increases when scanning at a constant applied force amplitude. Endurance tests shall be interrupted periodically to rescan for resonance. If a change in resonant frequency occurs during endurance testing at resonance, the frequency of vibration shall be adjusted to follow the resonance. However, if large or abrupt resonant frequency shifts occur, the item shall be examined for component failures. Resonance endurance tests shall be conducted for one million cycles or 8 hours, whichever occurs first, at each resonance. If the same resonance is excited by vibration applied in more than one direction, the endurance test for that resonance shall be accomplished with vibration applied in the direction which produces the greatest response. If no resonances are found, the unit shall be vibrated at 100 hertz and the corresponding amplitude as specified in the specification sheet for one million cycles in each of three mutually perpendicular directions.

Source: https://assist.dla.mil -- Downloaded: 2026-11-23T14:17Z
Check the source to verify that this is the current version before use.

4.5.6.2.4 Cycling endurance test. The valve shall be subjected to the following cycling tests at room temperatures in addition to the frequency scan and resonance endurance tests. The valve shall be mounted as specified in 4.5.6.2.1 and shall be vibrated at the displacements and accelerations defined in the specification sheet with the frequency continuously varied between the specified limits in a cycle of approximately 15 minutes. The rate of change of frequency shall be proportional to the frequency. The total test time shall be 1-1/2 hours. This test shall be repeated along each of three mutually perpendicular axes. The cycling test may be broken into convenient frequency ranges, provided the cycling rates and test times for each range are not changed.

4.5.7 Recalibration. The valve shall be subjected to a calibration as specified in 4.5.1. Failure of the unit to meet performance requirements of the specification sheet shall be cause for rejection.

4.5.8 Teardown and inspection. The valve shall be completely disassembled for examination and measurements of all parts. The qualification test shall be considered complete when every component of the valve has been subjected to and has satisfactorily completed the specified amount of qualification testing without disclosing excessively worn, distorted or damaged parts which would prohibit satisfactory operation of the unit.

4.5.9 Dust t. . The valve shall he subjected to dust tests in both operating and nonoperating conditions. Leakage shall be measured both before and after the test. All cycles shall be conducted using maximum engine interbleed conditions. Failure of the valve to meet the performance requirements of the specification sheet shall be cause for rejection.

4.5.9.l Part I, Nonoperating. The valve shall be subjected to a dust test in accordance with Method 510, Procedure I, of MIL-STD-810 while the valve is inoperative.

4.5.9.2 Part II, Operating. The valve shall be cycled 50 times while being supplied with contaminated air in accordance with Method 51O, Procedure I, of MIL-STD-81O, except the air shall be supplied at maximim inlet conditions.

4.5.10 Rain. The valve shall be subjected to a rain test In accordance with M~d 506, Procedure I, of F!IL-STD-81O. Rated inlet conditions shall be used for the test cycles.

4.5.11 ‘,, Low temperature. The valve shall be subjected to a low temperature test in accordance with Table IV.

4.5.12 !&!i&* The valve shall be subjected to a fungus test In accordance with Method 508, Procedure I, of KIL-STD-81O. The valve shall be operated before and after the test at rated inlet conditions.

Source: https://assist.dla.mil -- Downloaded: 2026-11-23T14:17Z
Check the source to verify that this is the current version before use.

4.5.13 Salt fog. The valve shall be subjected to a 50-hour salt fog test in accordance with Method 509, Procedure I, of MIL-STD-810. The valve shall be operated before and after the test period as specified in MIL-STD-810. Rated inlet conditions shall be used for all cycles.

Table IV. Low temperature test procedure

STEP	SOAK PERIOD HOURS	TEMP °F (°C)	OPERATION
1	8	-65±5 (-54±3)	One cycle at normal rated inlet conditions
2	1/2	-65±5 (-54±3)	One cycle at normal rated inlet conditions
3	5	-65±5 (-54±3)	One cycle at normal rated inlet conditions
4	1/2	-65±5 (-54±3)	One cycle at normal rated inlet conditions
5	5	-65±5 (-54±3)	One cycle at normal rated inlet conditions
6	1/2	-65±5 (-54±3)	One cycle at normal rated inlet conditions

4.5.14 Humidity. The valve shall be subjected to a humidity test consisting of 50 cycles (each cycle shall consist of varying the humidity from 40 to 95 to 40 percent within 30 minutes while maintaining a temperature of 125° + 25°F) (52° + 140C). The equipment specified in MIL-STB810, Method 50~ shall be ut~lized. The valve shall be operated before and after the test. At the end of the test the valve shall be subjected to an ambient temperature of -650 + 5oF (-54° + 3°C) for 5 hours without drying, shaking, or othe~ise =emoving con~ensed water from the valve. At the end of the 5-hour cold soak period, the valve shall be operated for one cycle. Rated inlet air conditions shall be used for all cycles. The valve shall be mounted in the actual aircraft orientation during this test to allow for normal drainage.

Source: https://assist.dla.mil -- Downloaded: 2026-11-23T14:17Z
Check the source to verify that this is the current version before use.

4.5.15 High temperature. The valve shall be soaked at maximum nonoperating temperature for 8 hours. Upon completion of the soak, the valve inlet shall be conditioned to maximum conditions where leakage shall be measured and the valve shall be subjected to 10 continuous cycles of 60 seconds open followed by 60 seconds closed. The valve shall then be subjected to 10 continuous cycles at 2 minutes open followed by 5 minutes closed. All cycles shall be conducted using maximum inlet conditions.

4.5.16 Dielectric strength. The electrical circuit of the valve shall be subjected to a dielectric strength test in accordance with MIL-E-25499.

4.5.17 Pressure drop. Loss in static pressure from inlet to outlet port of the valve shall be determined for a range of conditions so that a plot of W T/P versus WP/P on logarithmic (log-log) graph paper can be made where:

w = Actual weight flow, PPUI

T = Valve inlet air temperature, degrees Rankine

P = Valve upstream air pressure, psia

WP = Pressure drop, psi

Pressure drop (WP) in excess of that specified in the specification sheet shall be cause for rejection.

4.5.18 External load. The valve shall be mounted by one of its connecting flanges and the external loads specified in the specification sheet applied at the opposite flange. Bending moment loads shall be applied in both directions in each of two mutually perpendicular planes whose intersection falls on the centerline of the connecting flanges. The test shall be repeated with the valve mounted on the opposite flange. There shall be no evidence of damage or permanent deformation to the valve as a result of the applied loads.

4.5.19 Burst pressure. With the valve in the closed position and the outlet port open to atmospheric pressure, an air pressure equal to the minimum burst pressure specified in 3.7.5 (three times the maximum inlet air pressure specified in the specification sheet), shall be applied to the inlet port of the valve for a period of 10 minutes. The test shall be repeated with the valve in the open position and the outlet port capped. The unit shall show no evidence of structural failure upon completion of this test.

Source: https://assist.dla.mil -- Downloaded: 2026-11-23T14:17Z
Check the source to verify that this is the current version before use.

4.5.20 Individual inspection tests.

4.5.20.1 Examination. Each valve shall be subjected to a careful inspection to insure all external dimensional tolerances are within specification and drawing limits and that all parts are correctly assembled.

4.5.20.2 Dielectric strength. The valve's electrical circuit shall be subjected to a dielectric strength test which meets the requirements of MIL-G21480.

4.5.20.3 Proof pressure for quality conformance. With the valve in the closed position and the outlet port open to atmospheric pressure, apply an air pressure equal to two times the maximum inlet air pressure, as specified in the specification sheet, to the inlet port of the valve for a period of 1 minute Repeat this test except that the valve shall be in the open position and the outlet port shall be capped.

4.5.20.4 cycling. The valve shall be operated for 5 cycles at ambient temperature using air at rated inlet pressure and temperature and 14-volt do electrical power applied to the receptacle terminal.

4.5.20.5 Actuation. The valve shall be connected to a 28-volt do electrical power source and actuated twice at each of the inlet conditions specified in the specification sheet, Valve operation shall be smooth and the opening and closing rates shall be within the limits specified herein and in the specification sheet. Current draw shall not exceed that specified in 3.6.10.

4.5.20.6 Leakage for quality conformance. Internal and total leakage shall be measured with the valve in the closed position and with the valve inlet air at ambient temperature and minimum pressure and then at maximum temperature and maximum pressure specified in the specification sheet and shall not exceed the limits specified in the specification sheet.

5. PACKAGING

5.1 Application. The requirements specified herein apply only to direct purchases by or direct shipments to the Government.

5.2 Presentation. All ports shall be sealed by closures conforming to MIL-C-5501. All exterior surfaces of the component shall be protected by corrosion-preventative compounds conforming to MIL-C-11796 or MIL-C-16173. The component shall then be wrapped or bagged in Grade A greaseproof paper conforming to MIL-B-l2l and sealed with tape conforming to PPP-T-600

Source: https://assist.dla.mil -- Downloaded: 2026-11-23T14:17Z
Check the source to verify that this is the current version before use.

5.3 Packaging.

5.3.1 Level A. Unless otherwise specified, each valve shall be packaged for shipment in accordance with MIL-P-116. Method IIb of MIL-P-116 shall be employed for all valves designated as installation valves. Method IId of MIL-P-116 shall be employed for all valves designated as spare valves.

5.3.2 Level B. Valves shall be packaged in accordance with standard commercial practice.

5.4 _ " Shipping containers insofar as practicable shall contain an identical number of articles, shall be of a uniform size, and shall be designed to enclose the contents in a snug, tight-fitting manner. When packed for shipment, the gross weight of the exterior container shall not exceed 200 pounds. The above applies to 5.3.1 and 5.3.2.

5.4.1 Level A. Valves packaged in accordance with 5.3.1 shall be packed in an exterior shipping container in accordance with PPP-B-601 (overseas type) or PPP-B-621 (overseas type).

5.4.2 Level B. Valves packaged as specified in 5,3.1 shall be packed in an exterior shipping container conforming to PPP-B-601 (domestic type) or PPP-B-585.

5.4.3 Level C. The interior packages shall be placed in substantial commercial exterior shipping containers constructed to insure acceptance by common or other carrier for safe transportation at the lowest rate to the point of delivery. Except as specified herein, the container shall conform to the requirements of the Uniform Freight Classification Rules in effect at the time of shipment.

5*5 Marking. Each package and exterior shipping container shall be marked to comply with MIL-STD-129 and to include the following:

VALVE, STARTER CONTROL, AiRCRAFT ENGINE, MODEL _____
Specification: MIL-V-81995(AS)
M81995/*
Manufacturer's part number _____
Manufacturer's serial number _____
Government order or contract number _____
Federal Stock Number _____

NOTE : *Complete the part number by inserting applicable specification sheet slash number.

Source: https://assist.dla.mil -- Downloaded: 2026-11-23T14:17Z
Check the source to verify that this is the current version before use.

6. NOTES

6.1 Intended use. The valves covered by this specification are intended for use in aircraft for controlling pneumatic starters used for starting turbine engines.

6.2 Ordering data.

6.2.1 Procurement requirements. Contracts or orders should specify the following:

a. Title, number, and date of this specification.

b. The military part number.

c. The levels of preservation, packaging, and packing (see Section 5).

d. The activity responsible for sampling test (see 4.2.3) for government procurement the Naval Air Propulsion Center, Trenton, NJ 08628 (Attn: PE-62).

e. The cost of sampling tests as fixed by the price list issued by the Government qualifying activity of the issue in effect on the date of the invitation for the bid which led to the production associated with the test sample. If the test sample is selected from a group of production units involving more than one contract, the price for testing will be determined by the date of the bid associated with the oldest of these contracts. A certified check (made payable to Commander, Naval Air Propulsion Center) for the full amount of the test is to be submitted with each unit.

6.2.2 Data requirement. When this specification is used in a procurement which incorporates a DD Form 1423 and invokes the provisions of 7-104.9(n) of the Armed Services Procurement Regulations, the data requirements identified below will be developed as specified by an approved Date Item Description (DD Form 1664) and delivered in accordance with the approved Contract Data Requirements List (DD Form 1423) incorporated into the contract. When the provisions of ASPR-7-104.9(n) are not invoked, the data specified below will be delivered by the contractor in accordance with the contract requirements. Deliverable data required by this specification is cited in the following paragraphs:

Paragraph	Data Requirement	Applicable DID
4.2.4	Report of' failure of sampling tests	DI-R-5299A
4.3.2	Report of failure of individual inspection	DI-R-5299A

Source: https://assist.dla.mil -- Downloaded: 2026-11-23T14:17Z
Check the source to verify that this is the current version before use.

(Copies of data item descriptions required by the contractors in connection with specific procurement functions should be obtained from the procuring activity or as directed by the contracting officer).

6.3 Definitions and symbols. The applicable definitions and symbols used herein and in the specification sheet are as specified in the following paragraphs.

6.3.1 Proof pressure. Proof pressure is that internal pressure to which all high pressure valve parts are pressure tested to prove their structural integrity without causing damage.

6.3.2 Minimum burst pressure. Minimum burst pressure is the greatest applied internal pressure to which the valve can be subjected before ultimate strength of the valve is exceeded.

6.3.3 Symbols.

Symbol	Quantity	Unit
A	Acceleration	g (= 32.2 ft/sec2)
T	Temperature	oF, oC
W	Total Weight of the Valve	lb
P	Pressure	psi
Wa	Airflow	ppm

6.4 Qualification. With respect to products requiring qualification, awards will be made only for such products as have, prior to the time set for opening of bids, been tested and approved for inclusion in the applicable Qualified Products List whether or not such products have actually been so listed by that date. The attention of the suppliers is called to this requirement, and manufacturers are urged to arrange to have the products that they propose to offer to the Federal Government tested for qualification, in order that they may be eligible to be awarded contracts or orders for the products covered by this specification. The activity responsible for the Qualified Products List is the Naval AIr Systems Command, Attn: AIR-53641, Department of the Navy, Washington, D.C. 20360; however, information pertaining to qualification of products may be obtained from the Commanding Officer, Naval Air Propulsion Center, Attn: PE-62 Trenton, New Jersey 08628.

Preparing activity:

Navy - AS

(Project No. 2995-N030)

Source: https://assist.dla.mil -- Downloaded: 2026-11-23T14:17Z
Check the source to verify that this is the current version before use.

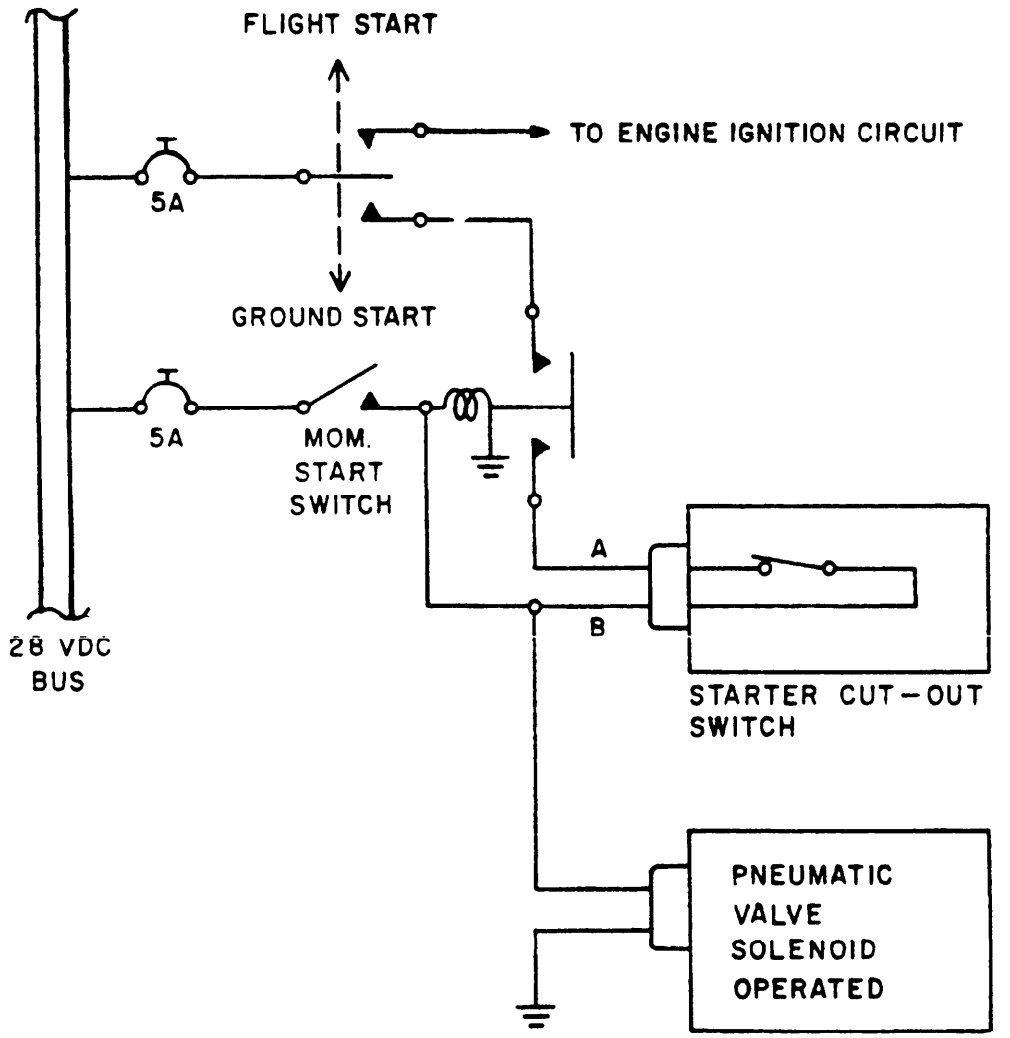

FIGURE 1. Wiring diagram for typical aircraft starting system

Source: https://assist.dla.mil -- Downloaded: 2026-11-23T14:17Z
Check the source to verify that this is the current version before use.

Table of Contents

Section	Title	Page
1	SCOPE	1
1.1	Scope	1
2.	APPLICABLE DOCUMENTS	1
2.1	Issues of documents	1
2.2	Other publications	4
3.	REQUIREMENTS	5
3.1	Precedence	5
3.2	Qualification	5
3.3	Dimensions	5
3.4	Data	5
3.5	Materials and parts	5
3.5.1	Materials	5
3.5.1.1	Toxic products	5
3.5.1.2	Non-metals	6
3.5.1.3	Metals	6
3.5.1.3.1	Steels (except corrosion-resistant)	6
3.5.1.3.2	Corrosion-resistant steels	8
3.5.1.3.3	Magnesium alloy	8
3.5.1.3.4	Castings	8
3.5.1.3.5	Stress corrosion embrittlement factors	8
3.5.1.3.6	Fatigue factors	9
3.5.1.3.7	Heat treatment	9
3.5.1.3.8	Welding	10
3.5.10309	Corrosion protection	10
3.5.1.4	Finish	10
3.5.1.4.1	Aluminum alloy parts	10
3.5.2	Parts	11
3.5.2.1	Standard parts	11
3.5.2.2	Thraded parts	11
3.5.2.2.1	Straight screw threads	11
3.5.2.2.2	Tapered pipe threads	11
3.5.2.2.3	Threaded inserts	11
3.5.2.2.4	Safetying	11
3.5.2.3	Packings	11
3.5.2.4	Filter	11
3.5.2.5	Snapring retainer	11
3.6	General design and construction requirement	12
3.6.1	Acceptable design	12
3.6.2	Interchangeability	12
3.6.3	Components	12
3.6.4	Fail-safe features	12
3.6.5	External openings	12
3.6.6	Adjustments	12
3.6.7	Drainage	12
3.6.8	Direction of flow	12

Source: https://assist.dla.mil -- Downloaded: 2026-11-23T14:17Z
Check the source to verify that this is the current version before use.

Table of Contents (Continued)

Section	Title	Page
3.6.9	Pneumatic bleed	12
3.6.9.1	Continuous bleed	13
3.6.10	Electrical requirements	13
3.6.10.1	Connectors	13
3.6,10.2	Internal electric connections	13
3.6.11	Position indicator	13
3.6.12	Color	13
3.6.13	Lubrication	13
3.6.14	Weight	13
3.7	Performance	13
3.7.1	Valve operation	13
3.7.1.1	Open-closing time and regulation	14
3.7.2	Duty cycles	14
3.7.3	Pressure drop	14
3.7.4	Leakage	14
3.7*5	Proof and minimum burst pressure	14
3.7.6	Operating service time	15
3.7.7	Performance tunes	15
3.7.7.1	Maximum pressure rise	15
3.7.7.2	Maximum peak pressure	15
3.7.7.3	Pressure vs. altitude and temperature	15
3.7.8	Altitude	15
3.7.9	Temperature	15
3.7.10	Acceleration forces	15
3.7.11	Vibration	15
3.8	Installation	15
3.8.1	Installation drawing	15
3.8.2	Air inlet and outlet connections	16
3.8.2.1	Mechanical loads and moments	16
3.8.2.2	Air inlet pressure loads	16
3.8.2.3	Extraneous loads and moments	16
3.9	Reliability and maintainability	16
3.10	Marking	16
3.10.1	Identification of product	16
3.10.2	Marking of product	17
3.10.3	Marking of parts	17
3.10.4	Part number	17
3.11	Part number and parts list	17
3.11.1	Part numbers	17
3.11.2	Parts list	17
3.11.3	Design and construction changes	18
3.11.3.1	Changes in design	18
3.11.3.2	Changes in part numbers	18

Source: https://assist.dla.mil -- Downloaded: 2026-11-23T14:17Z
Check the source to verify that this is the current version before use.

Table of Contents (Continued)

Section	Title	Page
3.11.3.3	Changes in the parts list	18
3.11.3.4	Changes in vendors	18
3.11.3.5	Responsibility for changes	18
4	QUALITY ASSURANCE PROVISIONS	18
4.1	Classification of tests	18
4.1.1	Responsibility for inspection	19
4.2	Qualification	19
4.2.1	Qualification test samples	19
4.2.2	Qualification testing	21
4.2.2.1	Retention	21
4.2.3	Sampling tests	21
4.2.4	Rejection and retest of qualification and sampling tests samples	22
4.2.5	Disassembly and inspection	22
4.2.6	Test report	22
4.3	Individual inspection	22
4.3.1	Rejection and retest of units submitted for acceptance	23
4.4	Test conditions	23
4.4.1	Test apparatus	23
4.4.1.1	Airflow	23
4.4.1.2	Temperature	23
4.4.1.3	Pressure	23
4.4.2	Instrumentation	23
4.5	Tests	23
4.5.1	Calibration	23
4.5.2	Cycling and endurance	24
4.5.3	Opening-closing time	25
4*5.4	Leakage	25
4.5.5	Proof pressure	25
4.5.6	Vibration	25
4.5.6.1	Method	25
4.5.6.2	Procedure	25
4.5.6.2.1	Test installation	25
4.5.6.2.2	Frequency scan	26
4.5.6.2.3	Resonance endurance tests	26
4.5,6.2.4	Cycling endurance test	27
4.5.7	Recalibration	27
4.5.8	Teardown and inspection	27
4.5.9	Dust	27
4.5.9.1	Part I, Nonoperating	27
4.5.9.2	Part II, Operating	27
4.5.10	Rain	27

Source: https://assist.dla.mil -- Downloaded: 2026-11-23T14:17Z
Check the source to verify that this is the current version before use.

Table of Contents (Continued)

Section	Title	Page
4.5.11	Low temperature	28
4.5.12	Fungus	28
4.5.13	Salt fog	28
4.5.14	Humidity	28
4.5.15	High temperature	29
4.5.16	Dielectric strength	29
4.5.17	Pressure drop	29
4.5.18	External load	29
4.5.19	Burst pressure	29
4.5.20	Individual inspection tests	30
4.5.20.1	Examination	30
4.5.20.2	Dielectric strength	30
4.5.20.3	Proof pressure	30
4.5.20.4	Cycling	30
4.5.20.5	Actuation	30
4.5.20.6	Leakage	39
5.	PACKAGING	30
5.1	Application	30
5.2	Preservation	30
5.3	Packaging	31
.5.3.1	Level A	31
5.3.2	Level B	31
5.4	Packing	31
5.4.1	Level A	31
5.4.2	Level B	31
5.4.3	Level C	31
5.5	Marking	31
6.	NOTES	32
6.1	Intended use	32
6.2	Ordering data	
6.2.1	Procurement requirements	32
6.2.2	Contract data requirements	32
6.3	Definitions and symbols	32
6.3.1	Proof pressure	32 ~
6.3.2	Minimum burst pressure	32
6.3.3	Symbols	33
6.4	Qualification	33

Source: https://assist.dla.mil -- Downloaded: 2026-11-23T14:17Z
Check the source to verify that this is the current version before use.

Table of Contents (Continued)

	Title	Page
	FIGURES	
Figure 1.	Wiring diagram for typical aircraft starting system	34
	TABLES	
Table I.	Qualification sample data summary sheet	14
11.	Test plans	20
III.	Endurance cycles	24
IV.	Low temperature test procedure	28

Source: https://assist.dla.mil -- Downloaded: 2026-11-23T14:17Z
Check the source to verify that this is the current version before use.

Source: https://assist.dla.mil -- Downloaded: 2026-11-23T14:17Z
Check the source to verify that this is the current version before use.

INSTRUCTIONS: In a continuing effort to make our standardization documents better, the DoD provides this form for use in submitting comments and suggestions for improvements. All users of military standardization documents are invited to provide suggestions. This form may be detached, folded along the lines indicated, taped along the loose edge *(DO NOT STAPLE)*, and mailed. In block 5, be as specific as possible about particular problem areas such as wording which required interpretation, was too rigid, restrictive, loose, ambiguous, or was incompatible, and give proposed wording changes which would alleviate the problems. Enter in block 6 any remarks not related to a specific paragraph of the document. If block 7 is filled out, an acknowledgement will be mailed to you within 30 days to let you know that your comments were received and are being considered.

NOTE. This form may not be used to request copies of documents, nor to request waivers, deviations, or clarification of specification requirements on current contracts. Comments submitted on this form do not constitute or imply authorization to waive any portion of the referenced document(s) or to amend contractual requirements.

(Fold along this line)

(Fold along this line)

DEPARTMENT OF THE NAVY
Commanding Officer
Naval Air Engineering Center
Systems Engineering Standardization Department
(SESD), Code 93
Lakehurst, NJ 08733

OFFICIAL BUSINESS
PENALTY FOR PRIVATE USE $300

NO POSTAGE NECESSARY IF MAILED IN THE UNITED STATES

BUSINESS REPLY MAIL
FIRST CLASS PERMIT NO 12503 WASHINGTON D C

POSTAGE WILL BE PAID BY THE DEPARTMENT OF THE NAVY

Commanding Officer
Naval Air Engineering Center
Systems Engineering Standardization Department
(SESD). Code 93
Lakehurst, NJ 08733

ATTN: TJM (9322)

Source: https://assist.dla.mil -- Downloaded: 2026-11-23T14:17Z
Check the source to verify that this is the current version before use.

(TO DETACH THIS FORM, CUT ALONG THIS LINE.)

STANDARDIZATION DOCUMENT IMPROVEMENT PROPOSAL

(See Instructions – Reverse Side)

1. DOCUMENT NUMBER	2. DOCUMENT TITLE

3a. NAME OF SUBMITTING ORGANIZATION	4. TYPE OF ORGANIZATION *(Mark one)*
	☐ VENDOR ☐ USER ☐ MANUFACTURER ☐ OTHER *(Specify)*: _____
b. ADDRESS *(Street, City, State, ZIP Code)*	

5. PROBLEM AREAS

a. Paragraph Number and Wording:

b. Recommended Wording:

c. Reason/Rationale for Recommendation:

6. REMARKS

7a. NAME OF SUBMITTER *(Last, First, MI)* – Optional	b. WORK TELEPHONE NUMBER *(Include Area Code)* – Optional
c. MAILING ADDRESS *(Street, City, State, ZIP Code)* – Optional	8. DATE OF SUBMISSION *(YYMMDD)*

DD FORM 82 MAR 1426 PREVIOUS EDITION IS OBSOLETE.

Source: https://assist.dla.mil -- Downloaded: 2026-11-23T14:17Z
Check the source to verify that this is the current version before use.

Source: https://assist.dla.mil -- Downloaded: 2026-11-23T14:17Z
Check the source to verify that this is the current version before use.

Source: https://assist.dla.mil -- Downloaded: 2026-11-23T14:17Z
Check the source to verify that this is the current version before use.