INCH-POUND
MIL-DTL-7823F
9 June 2020
SUPERSEDING
MIL-J-7823E(AS)
AMENDMENT 3
18 October 1984
MIL-J-7823E(AS)
15 January 1971

DETAIL SPECIFICATION

JACKET, FLYER'S, INTERMEDIATE, TYPE G-1

This specification is approved for use by all Departments and Agencies of the Department of Defense.

1. SCOPE

1.1 Scope. This specification covers the requirements for one type of leather jacket, fifteen sizes and two lengths of an intermediate, flyer's jacket designated as Type G-1.

1.2 Classification. The jacket is available in the following sizes and lengths.

Sizes: 32, 34, 36, 38, 40, 42, 44, 46, 48, 50, 52, 54, 56, 58, and 60
Lengths: Regular and Long

2. APPLICABLE DOCUMENTS

2.1 General. The documents listed in this section are specified in sections 3 and 4 of this document. This section does not include documents cited in other sections of this specification or recommended for additional information or as examples. While every effort has been made to ensure the completeness of this list, document users are cautioned that they must meet all specified requirements of documents cited in sections 3 and 4 of this specification, whether or not they are listed.

Comments, suggestions, or questions on this document should be addressed to Commanding Officer, Naval Air Warfare Center Aircraft Division Lakehurst, Systems Standardization and PHS&T Branch, Code BL32600, Mail Stop 120-3, Route 547, Joint Base MDL, NJ 08733-5100 or emailed to frank.magnifico@navy.mil. Since contact information can change, you may want to verify the currency of this address information using the ASSIST online database at https://assist.dla.mil.

DISTRIBUTION STATEMENT A. Approved for public release; distribution is unlimited.

AMSC N/A FSC 8415

Source: https://assist.dla.mil -- Downloaded: 2026-11-23T00:01Z
Check the source to verify that this is the current version before use.

2.2 Government documents.

2.2.1 Specifications, standards and handbooks. The following specifications and standards form a part of this document to the extent specified herein. Unless otherwise specified, the issues of these documents are those cited in the solicitation or contract (see 6.2).

FEDERAL SPECIFICATIONS

JJ-W-155 - Webbing, Textile (Cotton, Elastic)
KK-L-170 - Leather, Kidskin, or Goatskin, Chrome-Tanned

COMMERCIAL ITEM DESCRIPTIONS

A-A-50198 - Thread, Gimp, Cotton, Buttonhole
A-A-52106 - Cloth, Twill or Plain Weave, Polyester and Polyester Blend
A-A-55634 - Zipper (Fasteners, Slide Interlocking)
A-A-59826 - Thread, Nylon
A-A-59992 - Cloth, Interfacings: Woven, Cotton and Synthetic
A-A-59994 - Button, Sewing Hole, and Button, Staple (Plastic)

DEPARTMENT OF DEFENSE SPECIFICATIONS

MIL-DTL-508	-	Cloth, Oxford, Nylon, 3 Ounce
MIL-C-6590	-	Cloth, Pile (Synthetic Mouton, Knitted)
MIL-DTL-10884	-	Fasteners, Snap
MIL-DTL-32075	-	Label: For Clothing, Equipage, and Tentage (General Use)
MIL-DTL-32092	-	Leather, Cattlehide, Deerskin and Horsehide, Chrome Tanned
MIL-C-43665	-	Cloth, Wool: Mothproofing Treatment of

(Copies of these documents are available online at https://quicksearch.dla.mil.)

2.3 Non-Government publications. The following documents form a part of this document to the extent specified herein. Unless otherwise specified, the issues of the documents are those listed cited in the solicitation or contract (see 6.2).

AEROSPACE INDUSTRIES ASSOCIATION

NASM27980 - Fasteners, Snap, Style 2 (Regular Wire Spring Clamp Type)

(Copies of this document are available from http://www.aia-aerospace.org.)

AMERICAN ASSOCIATION OF TEXTILE CHEMISTS AND COLORISTS (AATCC)

AATCC Evaluation Procedure 1, Gray Scale for Color Change
AATCC Evaluation Procedure 2, Gray Scale for Staining
AATCC Evaluation Procedure 9 - Visual Assessment of Color Difference of Textiles
AATCC Test Method 8 - Colorfastness to Crocking: AATCC Crockmeter Method
AATCC Test Method 15 - Colorfastness to Perspiration

Source: https://assist.dla.mil -- Downloaded: 2026-11-23T00:01Z
Check the source to verify that this is the current version before use.

AATCC Test Method 16 - Colorfastness to Light (Xenon-Arc)
AATCC Test Method 20 - Fiber Analysis Qualitative
AATCC Test Method 61 - Colorfastness to Laundering: Accelerated
AATCC Test Method 81 - pH of the Water-Extract from Wet Processed Textiles
AATCC Test Method 99 - Dimensional Changes of Woven or Knitted Wool Textiles; Relaxations, Consolidation and Felting
AATCC Test Method 132 - Colorfastness to Dry Cleaning

(Copies of these documents are available from https://www.aatcc.org.)

AMERICAN SOCIETY FOR QUALITY

ASQ-Z1.4 - Procedures, Sampling and Tables for Inspection by Attributes

(Copies of this document are available from https://www.asq.org.)

ASTM INTERNATIONAL

ASTM D276 - Identification of Fibers in Textiles
ASTM D1814 - Standard Test Method for Measuring Thickness of Leather Units
ASTM D2594 - Standard Test Method for Stretch Properties of Knitted Fabrics Having Low Power
ASTM D3776/D3776M - Standard Test Method for Mass per Unit Area (Weight) of Fabric
ASTM D3787 - Standard Test Method for Bursting Strength of Textiles – Constant Rate of Traverse (CRT) Ball Burst Test
ASTM D3990 - Standard Technology Relating to Fabric Defects
ASTM D6193 - Standard Practices for Stitches and Seams

(Copies of these documents are available from https://www.astm.org.)

INFORMA HEALTHCARE

Repeat Insult Patch Test, Modified Draize Method, Principles and Methods of Toxicity

(Copies of this document are available online at http://www.crcpress.com.)

2.4. Order of precedence. Unless otherwise noted herein or in the contract, in the event of a conflict between the text of this document and the references cited herein, the text of this document takes precedence. Nothing in this document, however, supersedes applicable laws and regulations unless a specific exemption has been obtained.

Source: https://assist.dla.mil -- Downloaded: 2026-11-23T00:01Z
Check the source to verify that this is the current version before use.

3. REQUIREMENTS

3.1 First article. Unless otherwise specified, the Type G-1 intermediate, the flyer's jacket furnished under this specification shall be a product that has been inspected and has passed the first article inspections specified in 4.1a, 4.2 and 4.2.1.

3.2 Recycled, recovered, environmentally preferable or biobased materials. Recycled, recovered, environmentally preferable or bio-based materials should be used to the maximum extent possible, provided that the material meets or exceeds the operational and maintenance requirements, and promotes economically advantageous life cycle costs.

3.3 Design. The jacket shall consist of a leather outershell, with knit cuffs and waistband. The collar shall have a mouton top collar and leather under collar. The jacket shall be lined through the body and sleeves. The front closure shall have a slide fastener closure and protective flap with the letters USN perforated on the flap. The front opening shall be even in length at the neck and the bottom of the jacket when slide fastener is closed. There shall be two lower patch pockets with flaps. The back of the jacket shall be gusseted with bellows on each side. The top and bottom edges shall be equidistant on either side. The jacket shall conform in appearance to figures 1 and 2 and are furnished for informational purposes only and for general reference. They shall not be used in place of government patterns. Figures 3 thru 17 shall apply for construction and inspection purposes. When inconsistencies exist between the specification and the figures, the specification shall govern.

3.4 Materials and components. The materials and components shall conform to the applicable specifications and standards and figures 1 through 17, as listed or required herein.

3.4.1 Leather.

3.4.1.1 Basic material. The basic material used as the outershell of the jacket shall be fabricated from leather 2½ ounces thick, conforming to Class 2, Type I of MIL-DTL-32092, with the exceptions listed below. The leather shall be dyed brown to match Navy Shade 3756. The leather shall be drum dyed and the dye shall completely penetrate the leather from grain to flesh side. The leather shall have a light application of finish and dye containing only sufficient pigment to assist in making the color uniform. The finish shall not crack, flake, part from the leather, or become tacky. The cattle hide leather shall have a goatskin grain finish. As an alternate, the Class 2 of KK-L-170 may be used with the exceptions listed below:

These exceptions apply to MIL-DTL-32092 and KK-L-170:

a. Shrinkage temperature - the average shrinkage temperature shall be 94 degrees Celsius with minimum value of 90 degrees Celsius for any specimen.

b. Elongation - at least 80 percent of the specimens tested shall have a minimum elongation of 20.0 percent and a maximum elongation of 60.0 percent at a load of 25 pounds.

c. The requirements for pH, chrome and ash content are deleted.

Source: https://assist.dla.mil -- Downloaded: 2026-11-23T00:01Z
Check the source to verify that this is the current version before use.

3.4.1.2 Pockets, flaps, facings, belt, reinforcement, undercollar and hanger. The pockets, flaps, facings, belt, reinforcement, undercollar and hanger shall be fabricated from the outer shell leather (see 3.4.1.1). The finished pockets with flaps shall be horizontally and vertically aligned with lower side pocket edges mitered on the front of the jacket. The finished collar shall be uniform in shape, centered, with the even rounded corners.

3.4.2 Lining.

3.4.2.1 Jacket. The lining for the jacket shall be fabricated from the nylon oxford cloth conforming to MIL-DTL-508, Type I, Class 2. The color of the cloth shall approximate the color of the leather outershell when inspected as specified in 4.5.2, Table VII.

3.4.2.2 Pockets.

3.4.2.2.1 Outer. The outer pocket lining shall be fabricated from the twill cloth conforming to A-A-52106, color black. As an alternate cloth conforming to A-A-52106, Class 1 may be used.

3.4.2.2.2 Inner. The inner pocket shall be fabricated from the jacket lining cloth (see 3.4.2.1).

3.4.3 Interlining. The collar and pocket flap interlining shall be fabricated from the buckram cloth conforming to A-A-59992, Type II, natural or undyed. Color is optional.

3.4.3.1 Hanger reinforcement. The hanger reinforcement shall be fabricated from the interlining cloth in accordance with 3.4.3, and shall be located under the hanger, between the lining and leather outershell.

3.4.4 Mouton. The mouton for the top portion of the collar shall conform to MIL-C-6590, Type II, except that the weight shall be 24 ounces per square yard minimum. The mouton shall be dyed brown to match Navy shade 3755, when inspected as specified in 4.5.2 Table VII.

3.4.5 Knit components. The wool cuffs and waistband knit components of the jacket, shall be capable of excellent stretch and recovery and shall meet the physical requirements listed in Table I. Elastic shall be incorporated into the components to aid in meeting the stretch and recovery requirement. When tested, there shall be sufficient elastic in the components to ensure the components meet the knit stretch and recovery requirements. The elastic used shall not be visually noticeable in the finished component. The use of reprocessed, reused or waste wool shall be prohibited.

Source: https://assist.dla.mil -- Downloaded: 2026-11-23T00:01Z
Check the source to verify that this is the current version before use.

TABLE I. Knit component requirements.

Characteristic	Requirement
Fiber content	Wool (see 3.4.5)
Waistband weight	11 oz./sq. yd. (minimum)
Weight per dozen pairs of cuffs	11 ounces (minimum)
Bursting strength	80 lbs. (minimum)
Stretch	90 percent (minimum)
Recovery	85 to 100 percent
pH (wool only)	4.0 to 8.0
Mothproofing (wool only)	Pass
Shrinkage, length or width (including relaxation shrinkage) (wool only)	13 percent
Colorfastness (minimum): Light - Laundering Perspiration, acid and alkali Wet-dry cleaning Crocking	Rating 3 3 3 3 3

3.4.5.1 Waistband. The jacket's knit waistband shall be a 1 x 1 rib and conform to the requirements in 3.4.5.

3.4.5.2 Cuffs. The wrist cuffs shall conform to the requirements in 3.4.5. The cuffs shall have a 1 x 1 rib in its middle section and its ends shall be tapered with a tuck or expanding stitch. The finished cuff shall have a circular seamless construction. The cuffs dimensions and configuration shall conform to figure 16.

3.4.5.3 Color. When available, the knit components shall match the standard sample. When no standard is available, the color of the knit components shall be a good match to the jacket's basic leather material in 3.4.1.1.

3.4.6 Thread. The sewing thread shall conform to A-A-59826, Type II class A or B, Tex E (70). As an alternate, the thread for the jacket lining parts may conform to Class B of A-A-59826, Type II, Tex 70. The thread shall have at least "good" (3-4 minimum) rating for colorfastness to dry cleaning, perspiration, and light. The color of the thread shall match the color of the leather outershell, 3.4.1.1, when inspected as specified in 4.5.2, Table VII.

3.4.7 Gimp. The gimp thread for reinforcing the buttonhole shall conform to A-A-50198, soft finish, Tex 210 or glazed finish Tex 180. The color of the gimp thread shall approximate the basic material in 3.4.1.1, when inspected as specified in 4.5.2, Table VII. The gimp thread approximate of the basic material" shall have at least "good" 3-4 (minimum) colorfastness to dry cleaning.

3.4.8 Buttons. The buttons shall conform to A-A-59994, Type I, Class 1, Style 20 or 21, Size 30 Line, Dull Finish. The color of the buttons shall approximately match the color of the

Source: https://assist.dla.mil -- Downloaded: 2026-11-23T00:01Z
Check the source to verify that this is the current version before use.

leather outershell, 3.4.1.1, when inspected as specified in 4.5.2, Table VII.

3.4.9 Elastic webbing. The elastic webbing shall conform to JJ-W-155, Type I, Class 3. The elastic webbing shall be ¾-inch wide, natural color. The length of the elastic webbing shall conform to the patterns.

3.4.10 Slide fastener. The slide fastener shall conform to A-A-55634, Type III, Style 8 and Table II. The chain endurance inspection of A-A-55634 shall apply. The chain and all other metal components shall be a commercially available brass alloy 230 or 268 with a brass natural finish except for the slider's lock pin and/or spring, which shall be made of stainless steel material. The slider shall be a non-reversible, automatic, locking, single pull and may be fabricated from a zinc alloy, brass plated. The slider shall be a size 10 (heavy) and shall measure 1¼-inch long. The slider shall be wide enough to accommodate a leather thong and pull tab (see 3.4.11). The tape of the slide fastener shall be woven from yarns of 100 percent textured polyester, spun polyester, 100 percent cotton warp with nylon fill, or intimate blends of nylon/cotton, polyester/cotton, or 100 percent spun aramid. The tape's color shall be a "good" 3-4 minimum match to the basic material (see 3.4.1.1) with "good" colorfastness to laundering and wet-dry cleaning. The slider shall close the slide in the upward direction.

TABLE II. Slide fastener lengths.

Jacket Size	**Slide fastener length (inches)**	
	Regular	Long
32	20 ¼	21 ¾
34	20 ¼	21 ¾
36	21 ¼	22 ¾
38	21 ¼	22 ¾
40	22 ¼	23 ¾
42	22 ¼	23 ¾
44	22 ¼	23 ¾
46	22 ½	24 ¼
48	22 ½	24 ¼
50	23	24 ½
52	23	24 ½
54	23	24 ½
56	23 ½	25
58	23 ½	25
60	23 ½	25
Tolerance	+/-½	+/-½

Source: https://assist.dla.mil -- Downloaded: 2026-11-23T00:01Z
Check the source to verify that this is the current version before use.

3.4.11 Thong. The thong shall be fabricated from the basic material (leather) material in 3.4.1.1 and shall be looped through and securely knotted to the pull, approximately at the center of the thong length. The width of the thong shall be 5/16 (±1/16) inch. The free finished length of the thong shall be 2½ (±¼) inches long. The end of the thong shall be cut on an angle of approximately 60 degrees.

3.4.12 Snap fasteners. The snap fasteners shall conform to MIL-DTL-10884, Style 2, Finish 2 or 5, and NASM27980-1B, -2B, -6B, -7B, and -8B.

3.4.13 Eyelets. The eyelets shall be made of brass with a black chemical finish and shall conform to Figure 17.

3.5 Construction.

3.5.1 Cutting. The leather and the lining shall be cut in strict accordance with the furnished patterns (see 3.5.1.1). The knitted material for the waistband shall be cut in the wale direction of the knit. The lining gussets may be cut from the ends. The construction of the Type G-1 intermediate, flyer's jacket shall conform to Figures 1 through 17.

3.5.1.1 Patterns. The government will furnish a complete set of patterns, which provides for a ½-inch seam allowance for all seams. The pattern contains markings for eyelet, pocket, flap, and welt placements. The government patterns shall be used to create the contractor's working patterns. Minor modifications are permitted to the contractor's working pattern where necessary when using automatic equipment or to accommodate the manufacturer's production process. These modifications shall not alter the appearance, serviceability or dimensional requirements cited in this specification. The jacket shall be constructed from the pattern pieces listed in Table III.

Source: https://assist.dla.mil -- Downloaded: 2026-11-23T00:01Z
Check the source to verify that this is the current version before use.

TABLE III. Pattern parts list.

Material	Piece Nomenclature 1/	Specification Nomenclature	Cut #
Leather	1-L-FRONT	Front	2
	1-L-BACK	Back	1
	1-L-BACK-SIDE	Side Back	2
	1-L-SLEEVE-TOP	Top Sleeve	2
	1-L-UND-SLEEVE	Under sleeve	2
	1-L-FRT-FAC-RT	Right front facing	1
	1-L-FRT-FAC-LEFT	Left front facing	1
	1-L-FRONT-FLAP	Front flap	1
	1-L-COLLAR-UNDER	Under collar	1
	1-L-COLLAR-UNDER-ALT	Under collar alternate	2
	1-L-BACK-BELT	Belt	1
	1-L-BACK-SKIRT	Skirt	1
	1-L-GUSSET	Gusset	2
	1-L-PATCH_PKT	Patch pocket	2
	1-L-PATCH-FLAP-TOP	Top flap	2
	1-L-PATCH-FLAP-UNDER	Under flap	2
	1-L-PKT-INSD-WELT	Welt inside pocket	1
	1-L-PKT-INSD-FAC	Facing inside pocket	1
	1-L-PNCL-PKT-WELT	Pencil pocket (welt and facing)	2
	1-L-COLLAR-TAB	Collar tab	2
	1-L-FRONT-ALT	Front alternate	2
	1-L-FRT-FAC-RT-ALT	Right front facing alternate	1
	1-L-FRT-FAC-LFT-ALT	Left front facing alternate	1
	1-LA-FR)NT-EXT-ALT	Alternate front extension	2
	1-LA-FRT-FAC-RT-ALT	Alternate facing extension right	1
	1-LA-FRT-FAC-LF-ALT	Alternate facing extension left	1
Lining, nylon	1-N-FRT-LINING	Front lining	2
	1-N-BACK-LINING	Back lining	1
	1-N-BACK-SIDE-LIN	Side back lining	2
	1-N-SLEEVE-TOP-LIN	Top sleeve lining	2
	1-N-SLEEVE-UNDR-LIN	Under sleeve lining	2
	1-N-BACK-SKIRT-LIN	Skirt lining	1
	1-N-GUSSET-LINING	Gusset lining	2
	1-N-PATCH-PKT-LIN	Patch pocket lining	2
	1-N-PNCL-PKT-LIN	Pencil pocket lining	1

Source: https://assist.dla.mil -- Downloaded: 2026-11-23T00:01Z
Check the source to verify that this is the current version before use.

TABLE III. Pattern parts list – Continued.

Buckram interlining, cotton	1-I-COLLAR-UNDER	Under collar interlining	1
	1-I-COLLAR-UNDR-ALT	Alternate undercollar interlining	2
	1-I-PATCH-FLAP-UNDR	Under flap interlining	2
Mouton (fur)	1-M-COLLAR-TOP	Top collar mouton (fur)	1
Knit cloth	1-K-WAISTBAND	Waistband knit	1
Webbing, elastic	1-T-ELASTIC-WEBBING	Elastic webbing	4
Twill cloth	1-W-INS-PKTG-OUTR	Inside pocketing outer	1
	1-W-INS-PKTG-INNR	Inside pocketing inner	1
Templates	1-T-FRONT-LEFT	Front template	-
	1-T-FRONT-LEFT-ALT	Front temp alt template	-
	1-T-COLLAR-UNDR-ST	Collar under stitch template	-
	1-T-COLLAR-TAB-TEMP	Collar tab template	-
	1-T-ELASTIC-WEBBING	Elastic webbing (4) template	-
	1-T-FRT-FAC-LEFT	Front facing left template	-
	1-T-FRT-FAC-LFT-ALT	Font facing left alternate template	-
	1-T-FRT-PROP-MRKR	Property marker USN template	-
	1-T-GUSSET	Gusset template	-
	1-T-PATCH-FLAP-TEMP	Patch flap template	-
	1-T-PATCH-PKT-LEFT	Patch pocket left template	-

1/ There are no pattern pieces for the knitted cuffs, leather hanger, hanger reinforcement and the leather reinforcement for the eyelet associated with the welt pocket.

3.5.2 Shade and size marking. Except for the lining gusset, cut from the ends (see 3.4.1), all the component parts of the leather outershell and the jacket lining shall be marked or ticketed to ensure a uniform shade, grain pattern, and proper assembly throughout the jacket. The bundling method may be used for the leather skins provided they conform to 3.5.3. No metal fastening device or sewn-on ticket shall be used. The shade and size markings shall be accomplished by the use of an ink pad numbering machine, rubber stamp, or pencil provided the markings do not show through to the outerside of the jacket or the jacket lining and shall not be deleterious to the leather or the cloth. The markings, which are placed on the seam allowance, shall not be visible in the assembled garment. The adhesive type shade and size marking tickets may be used for the shade and size markings provided they conform to 3.5.3.1. The assembled jacket shall not contain any shade or size marking tickets.

3.5.3 Bundling method. The leather skins shall be segregated into groups of the various shades to assure a uniform shade and grain pattern throughout the outershell of the jacket. The color of the skins shall conform to 3.4.1.1. Sufficient component parts shall be cut from each group for as many complete jacket outershells as possible. The component parts of each individual group shall be assembled into a bundle and the top ply of each individual component

Source: https://assist.dla.mil -- Downloaded: 2026-11-23T00:01Z
Check the source to verify that this is the current version before use.

part shall be marked with a bundle number and size of the jacket. The manner of the markings shall comply with 3.5.2. The component parts cut from various groups shall not be joined together to construct a jacket outershell.

3.5.3.1 Adhesive shade and size marking tickets. The adhesive shade and size marking tickets shall be fabricated from paper with a thermo-activated adhesive applied on one side. The adhesive shall not discolor or damage the cloth or leather and the adhesive mass shall not adhere to the cloth or leather upon removal of the ticket. The heat used to attach the thermo-activated adhesive tickets shall not stiffen, harden, scorch, or damage the leather or cloth, as applicable in any manner. The jackets with the tickets shall be visually inspected to ensure no residue remains on the jacket after removal of the ticket (see 4.5.4, Table VIII).

3.5.4 Seams and stitching. All the seams used in the fabrication of the jacket shall conform to Figures 1 through 11 and unless otherwise specified, shall be accomplished with Stitch Type 301. All the sections of the lining, when sewn to each other, shall be joined together with overedge stitching, Stitch Type 602, ¼ inch wide overcasting the edge, and Stitch Type 401, 1/2 inch from the edge, forming a seam similar to Seam Type SSa-2. The stitch Types 602 and 401 may be accomplished simultaneously or individually. The Stitch Type 401 looper thread shall not be visible in the assembled jacket. As an alternate, overedge Stitch Type 504, 505, or 506 may be substituted for stitch Type 602 and stitch Type 301 may be substituted for Stitch Type 401.The cut edges, of the lining sections, that are not sewn to each other shall be overedge stitched individually with 504, 505, or 506. In the formation of the armhole, shoulder, sleeve outseams, and side seams, of the jacket outershell, the top (outer) ply shall be turned back and stitched down (top stitched) with Stitch Type 301 or 401, 1/4 inch from the turned edge, forming Seam Type LSq-2. There shall be 8 to 10 stitches per inch for all the types of stitching. All the double rows of stitching shall be 3/16 to 1/4 apart. The types of the stitching and seams shall conform to ASTM D6193. Except for the collar closing tab, hanger, and the top edge of the pocket flaps, which are turned under, no cut or raw edges shall be visible. All the seam edges shall be properly forced out and shall not contain any folds. No seam or component shall be twisted, puckered, or pleated and no part of the jacket shall be caught in an unrelated operation or seam. The slide fastener's retainer shall be placed ½ to ¾ inch from the bottom of the jacket. The construction of the jacket shall not interfere with the movement of the slider.

3.5.4.1 Sewing. Each row of stitching shall be straight and parallel to the seam edge. The straightness of the stitching in any row shall be maintained within a tolerance of plus or minus 1/32 inch. The same tolerance for spacing and parallelism shall be applicable for the double rows of stitches. The ends of all the Stitch Type 301 stitching, that are not caught in other seams or stitches shall be securely backstitched by overlapping on themselves for at least ½-inch. The thread breaks, skips, and run-offs shall be overstitched not less than one inch. The thread tension shall be maintained so that there shall not be any loose or tight stitching and the lock shall be embedded in the materials sewn together. All the thread ends shall be trimmed to ¼ inch or less.

3.5.4.2 Attaching of the buttons. The pocket buttons shall be sewn through the pocket patch and lining. The buttons, for the collar, shall be sewn through the undercollar and interlining only. The buttons shall be attached either by hand or machine sewing.

3.5.4.2.1 Hand sewing. The buttons shall be attached, by hand sewing, with a minimum of

Source: https://assist.dla.mil -- Downloaded: 2026-11-23T00:01Z
Check the source to verify that this is the current version before use.

four double strands of the thread through each sewing hole. The thread shall then be wound around the attaching threads, a minimum of four times to form a hand wrapped shank 1/8 to 3/16 inch long. The threads shall be passed through the shank at least four times to secure the loose ends.

3.5.4.2.2 Machine sewing. The buttons shall be attached by machine sewing with Stitch Type 101, 20 to 24 stitches per button, or with Stitch Type 301, 14 to 16 stitches per button. Each machine sewn button shall have a securely machine wrapped shank, 1/8 to 3/16 inch long.

3.5.4.3 Buttonholes. All the buttonholes shall be clean cut and uniform in appearance. The buttonholes shall be of the eyelet end taper-bar type and worked over gimp. The leather shall be securely caught and the ends of the buttonholes shall be tacked. The purling and gimp shall be on the outer-side of the jacket. Each buttonhole shall contain a minimum of 46 stitches including the tacking. Each buttonhole shall have a cut opening of 3/4 to 7/8 inch. The center of each button shall be properly aligned with the eyelet of the corresponding pocket flap of the collar closing tab buttonhole, as applicable.

3.5.4.3.1 Pocket flap. Each pocket flap shall have a centered vertical buttonhole 5/8 ±1/8 inch from the bottom edge.

3.5.4.3.2 Collar closing tab. The collar closing tab shall have a buttonhole 3/4 inch, 1/8 inch from the furthest point of the outer free edge. The location and angle of the buttonhole shall be as indicated by the patterns. The tab shall be turned back and held in position by a button.

3.6. Dimensions. The jackets shall be full cut and after assembly shall conform to the dimensions for the different sizes specified in Table IV and V when measured as specified in 4.5.5. The variation in length between the left and right sleeve inseams shall not exceed ½ inch in any jacket.

TABLE IV. Finished jacket measurements (in inches).

SIZE	1/2 Chest (A)	1/2 Waist (B)	Back Length (C)		Sleeve Inseam Length (D)		Collar Length (E)	Collar Height (F)
			Regular	Long	Regular	Long		
32	18 1/2	16 1/2	20 1/4	21 3/4	14 3/4	16	15 3/4	2 3/4
34	19 1/2	17 1/2	20 3/4	22 1/4	14 3/4	16	16 1/2	2 3/4
36	20 1/2	18 1/2	21 1/4	22 3/4	15 3/4	17	17 3/8	2 3/4
38	21 1/2	19 1/2	21 3/4	23 1/4	15 3/4	17	18 1/4	2 3/4
40	22 1/2	20 1/2	22 1/4	23 3/4	16 3/4	18	19	2 3/4
42	23 1/2	21 1/2	22 1/2	24	16 3/4	18	19 1/2	2 3/4
44	24 1/2	22 1/2	22 3/4	24 1/4	17 3/4	19	20 1/8	2 3/4
46	25 1/2	23 1/2	22 7/8	24 3/8	17 3/4	19	20 1/2	2 3/4
48	26 1/2	24 1/2	23	24 1/2	18 3/4	20	20 7/8	2 3/4
50	27 1/2	25 1/2	23 1/8	24 5/8	18 3/4	20	21 1/4	2 3/4
52	28 1/2	26 1/2	23 1/4	24 3/4	19 3/4	21	21 5/8	2 3/4
54	29 1/2	27 1/2	23 3/8	24 7/8	19 3/4	21	22	2 3/4
56	30 1/2	28 1/2	23 1/2	25	20 3/4	22	22 1/2	2 3/4

Source: https://assist.dla.mil -- Downloaded: 2026-11-23T00:01Z
Check the source to verify that this is the current version before use.

TABLE IV. Finished jacket measurements (in inches) – Continued.

58	31 1/2	29 1/2	23 5/8	25 1/8	20 3/4	22	23	2 3/4
60	32 1/2	30 1/2	23 3/4	25 1/4	21 3/4	23	23 3/8	2 3/4
TOL.	± 1/2	± 1/2	+3/4 -1/2	+3/4 -1/2	±1/2	± 1/2	± 1/2	+1/4 -1/8

TABLE V. Finished jacket pocket measurements (inches).

Finished Jacket Pocket Parts	Finished dimensions	Tolerance
Patch pocket length (G)	8	± 1/8
Patch pocket width (H)	7	± 1/8
Pocket flap, length at center (J)	2 ¾	+1/4 - 1/8
Pocket flap, length at sides (K)	2 ¼	+1/4 - 1/8
Pocket flap, width (L)	7 ¼	± 1/8
Pencil pocket welt, length (M)	1	± 1/8
Pencil pocket welt, width (N)	½	± 1/8
Pencil pocket, depth (P)	6	± 1/4
Inside pocket welt, length (R)	7	+ 1/8 - 1/4
Inside pocket welt, width (T)	7/8	± 1/8
Inside pocket, depth (U)	8 ½	± 1/8

3.7 Property markings. The flap, which extends down the front of the jacket beneath the slide fastener, shall be perforated with the letters “USN”. The letters shall be placed in the center of the width of the flap, and in the direction axis of the flap. The perforations shall be in the upper portion of the flap, above the horizontal seam. The letters shall be 1 inch high and 1 inch wide and shall be evenly spaced so that the total width is approximately 1 inch. The letters “USN” shall be perforated through both thicknesses of the leather in the flap and so spaced that these perforations shall not propagate a tear m the leather, pull out, or cut any portion of any seam in the facing.

3.8 Label. A combination, identification and size label shall be centered (±½ inch) below the hanger tape and edge stitched on all four sides to the lining only. The label shall conform to Type VI, Classes 1 and 2 of MIL-DTL-32075. The label shall contain the following inscription:

NOMENCLATURE: JACKET, FLYER’S INTERMEDIATE, TYPE G-1
SIZE: 40 (EXAMPLE)
SPECIFICATION: MIL-DTL-7823F
NAME OF MANUFACTURER: XYZ COMPANY (EXAMPLE)
NSN: 8415-00-000-0000 (EXAMPLE)
OUTERSHELL: 100% LEATHER
KNIT CUFF AND WAISTBAND: 98% WOOL 2% ELASTIC (EXAMPLE)
LINING: 100 % NYLON
MOUTON: 100% MOD ACRYLIC

Source: https://assist.dla.mil -- Downloaded: 2026-11-23T00:01Z
Check the source to verify that this is the current version before use.

CONTRACT NUMBER: SPM1C1-10-D-0000 (EXAMPLE)
LOT #
MFR DATE

3.8.1. Label, barcode. The jacket shall be individually bar-coded with a paper tag for personal clothing items in accordance with MIL-DTL-32075, type VIII, class 17 label/tag. The paper used for the tags shall be standard bleached sulfate having a basis weight of 100 pounds with a smooth finish to accept thermal transfer and direct printing. The tags shall have a hole and shall be attached to each jacket by a fastener, clearly legible and readable by scanner. The label/tag shall be located on the end item so that it is completely visible when it is folded or packaged as specified. The bar coding element shall be legible and readable by scanner. The bar code element shall be a 13 digit national stock number (NSN). There shall be a 12-digit Universal Product Code (UPC) assigned for all NSNs by the government. The initial "UPC" shall appear beneath the code. The bar codes for the NSN and UPC shall be medium to high density and shall be located so that they are completely visible on the item. When it is folded and/or packaged as specified. The label shall not cause any damage to the jacket such as a spot or stain or damage due to the location on the garment. If the jacket is placed in a plastic bag, use Type VII (pressure sensitive label) of MIL-STD-32075. If the jacket is tied in a bundle or left as an individual item, use Type VIII (Tag, Paper) of MIL-STD-32075.

3.9. Toxicity. The finished jacket shall not present a health hazard and shall show compatibility with prolonged direct skin contact, when tested as specified in 4.5. Chemicals recognized by the Environmental Protection Agency (EPA) as human carcinogens shall not be used.

3.10 Workmanship. After completion of the final assembly, the finished jackets shall be thoroughly cleaned and all loose thread, lint, and foreign matter shall be completely removed. The snap fasteners and the metal eyelets and washers shall be securely clinched without distortion, cracking, splitting, or cutting of the leather. The snap fastener stud and socket shall be properly aligned so that when snapped together shall not cause a noticeable bulge or twist to the inner pocket. The jackets shall not contain any non-specified hole, tear, cut, burn, needle chew, spot, stain, or weakening defect. The metal components shall not be misaligned or distorted nor contain any corrosion, scale, cut, dent, nick, burr, sliver, crack or sharp edge. The collar shall be uniform in shape, centered, with even rounded edges and shall match the collar template. The patch pockets and pocket flap shall be uniform in shape and conform to their respective templates. The finished pockets and flaps shall be horizontally and vertically aligned on the front of the jacket. The jacket sleeves shall be equal in length. The bellows folded edge shall be equal distance at the shoulders for the jacket and the lining. The bellows folded edge at the bottom shall be equal distance for the jacket and the lining. The front opening shall be even in length at the neck and bottom of the jacket when slide fastener is closed. The construction of the jacket shall not interfere with the movement of the slider. The left and right edges of the jacket shall meet and not overlap when slide fastener is closed. The jackets shall be uniform in quality and shall be free from irregularities or defects which could adversely affect performance, reliability or durability. The jackets shall conform to the quality and grade of product established by this specification. The occurrence of defects shall not exceed the acceptance criteria established herein.

Source: https://assist.dla.mil -- Downloaded: 2026-11-23T00:01Z
Check the source to verify that this is the current version before use.

3.11 Bagging preparation. Each jacket's slide fastener shall be fully closed, the snap fastener shall be snapped together, the pocket flaps shall be buttoned, and the collar closing tab shall be folded back and buttoned. Each jacket shall be prepared as follows:

a. Place the jacket face down and fold the sleeves across the back.
b. Fold in half by bringing the bottom up to the top.

4. VERIFICATION

4.1 Classification of inspection. The examination and the testing of the Type G-1 intermediate, flyer's jacket shall be classified as follows:

a. First article inspection
b. Conformance inspection
c. In-process inspection

4.2 First article inspection. First article inspection consists of examinations and tests performed on samples which are representative of the production item after award of a contract to determine that the production item conforms to the requirements of this document. (see 3.1, 4.2, and 4.2.1). The first article inspection of the type G-1 intermediate, flyer's jacket shall be performed on completed end items. The first article inspection shall consist of examinations and tests for all the requirements of this document and shall be unacceptable if the requirements are not met.

4.2.1 First article samples. Unless otherwise specified, as soon as practicable after the award of the contract or purchase order, the manufacturer shall submit two jackets of any size specified in the contract or order. The samples shall be representative of the construction, workmanship, components, and materials to be used during production.

4.3 Conformance inspection. Conformance inspection shall consist of examinations and tests on completed jackets in accordance with ASQ Z1.4 to ensure all the requirements of this document are met. The presence of any nonconformance shall be cause to reject any production lot. The conformance inspection shall consist of the following:

Visual examination of the jacket
Dimensional check of the jacket

4.3.1 Conformance inspection samples. Unless otherwise specified, sampling for inspection shall be performed in accordance with ASQ Z1.4. The sample unit shall be one completed jacket and the lot size shall be expressed in units of jackets made under the same conditions and from the same materials and components.

4.4 In-process inspection. Visual and dimensional examinations of each end item shall be made at any point or during any phase of the manufacturing process to determine whether construction details that cannot be examined in the finished product are in accordance with requirements specified. Materials and components, which can be classified as a defect in accordance with Tables IV, V, VIII and IX shall be removed from production.

Source: https://assist.dla.mil -- Downloaded: 2026-11-23T00:01Z
Check the source to verify that this is the current version before use.

4.5 Inspection methods.

4.5.1 Knit component tests. The characteristics specified in 3.4.5 shall be tested in accordance with the test methods specified in Table VI. Unless otherwise specified, the tests shall apply to both the cuffs and the waistband.

TABLE VI. Knit component verification.

Property	Verification method
Weight for waistband	ASTM D3776/D3776M, Option C
Weight per dozen pairs of cuffs	See 4.5.1.1
Bursting strength	ASTM D3787
Stretch and recovery	ASTM D2594
pH	AATCC 81
Mothproofing (wool only)	See 4.5.1.2
Shrinkage, length or width (including relaxation shrinkage) (wool only)	1/ AATCC 99
Knit type	See 4.5.1.3
Colorfastness to light	AATCC 16.3, Option 3
Colorfastness to laundering	AATCC 61, Test 2A
Colorfastness to perspiration	AATCC 15
Colorfastness to crocking	AATCC 8
Color	See 4.5.3
Fiber Content	AATCC TM 20 or ASTM D276

1/ AATCC 99 (2004), paragraph 7 for 1 cycle

4.5.1.1 Weight per dozen pairs test for cuffs. Twelve pairs of cuffs shall be weighted on any scale that can be calibrated to the nearest ounce. The results shall be recorded as pass or fail (see 3.4.5, Table I).

4.5.1.2 Mothproofing test. When wool is used, all testing specified in MIL-C-43665 shall be performed. The contractor shall identify the mothproofing treatment used.

4.5.1.3 Knit stitch verification. One cuff and one waistband shall be visually examined for conformance to the required knit stitches. The results shall be recorded as pass or fail.

4.5.2 Component and material testing. The characteristics shall be tested in accordance with Table VII.

Source: https://assist.dla.mil -- Downloaded: 2026-11-23T00:01Z
Check the source to verify that this is the current version before use.

TABLE VII. Component and material testing.

Material	Characteristic	Requirement	Test Method
Leather	All	3.4.1.1	1/ MIL-DTL-32092 1/ KK-L-170
	Thickness	3.4.1.1	ASTM D1814
	Color	3.4.1.1	Visual (4.5.3)
Lining	All	3.4.2.1	1/ MIL-DTL-508
Mouton	All	3.4.4	1/ MIL-C-6590
	Weight	3.4.4	ASTM D3776/D3776M 2/
	Color	3.4.4	Visual (4.5.3)
Thread	All	3.4.6	1/ A-A-59826
Gimp	All	3.4.7	1/ A-A-50198
	Colorfastness to dry cleaning	3-4 min	3/, 4/ AATCC 132
	Color	3.4.7	Visual (4.5.3)
Buttons	All	3.4.8	1/ A-A-59994
	Color	3.4.8	Visual (4.5.3)
Slide fastener tape	Colorfastness: - Laundering	3-4 min	3/, 4/ AATCC 61 (3a)
	-Wet-dry cleaning	3-4 min	3/, 4/ AATCC 132
	Color	3.4.10	Visual (4.5.3)
Slide Fastener	Metal Composition		5/
Interlining	All	3.4.3, 3.4.3.1	1/ A-A-59992
Eyelet	All	3.4.13	Figure 16
Lining, Pocket	All	3.4.2.2.1, 3.4.2.2.2	1/ A-A-52106
Snap fastener	All	3.4.12	1/ MIL-DTL-10884 NASM 27980-1B, 2B, 6B, 7B, 8B.
Webbing, Elastic	All	3.4.9	1/ JJ-W-155

1/ Test for all characteristics in the document.

Source: https://assist.dla.mil -- Downloaded: 2026-11-23T00:01Z
Check the source to verify that this is the current version before use.

2/ Except that a specimen size cannot be less than 4 +/- inches.
3/ AATCC Evaluation Procedure 1, Gray Scale for Color Change.
4/ AATCC Evaluation Procedure 2, Gray Scale for Staining
5/ The slide fastener's metal composition, brass and stainless steel, and the eyelets brass shall be verified by X-ray Fluorescence (XRF), Energy Dispersive X-ray Spectroscopy (EDS, EDX, EDXS, or XEDS) Energy Dispersive X-Ray Analysis (EDXA), or Energy Dispersive X-ray Microanalysis (EDXMA). One slide fastener and eyelet/washer shall be tested. The results shall be recorded as pass or fail.

4.5.3 Visual shade matching. The color and appearance of the finished materials/components shall be viewed using AATCC Evaluation Procedure 9, Option C, with a light source simulating artificial daylight (illuminant D75), a color temperature of 7500 °K (±200 °K), and an illumination of 100 (±20) foot candles. Also, under incandescent lamplight (illuminant A) at a color temperature of 2856 °K (±200 °K), the color and appearance shall be a good match to the standard sample.

4.5.4 Jackets. Each of the jackets selected as a sample unit from the lot shall be thoroughly checked dimensionally and examined visually to determine conformance to the specification. The classification and list of defects, Tables VIII and IX, as applicable, shall be used to classify and enumerate the defects found.

TABLE VIII. Classification of defects for the visual examination of the jacket. 1/

Defect	Critical	Major	Minor
Material Defects and Workmanship Damages			
General			
a. Any non-specified hole, scissors or knife cut, tear, mend, burn, or weakening defect, such as a smash, multiple float, loose slub, needle chew, or abraded area 2/	1		
b. Any portion of the cloth or leather stiffened, hardened, or scorched by any process of manufacturing		101	
c. Any lining, facing, or interlining pleated, short, tight, or twisted causing puckers or twist on any part of the jacket			201
d. Any elastic webbing strip causing puckers or twist on the outerside of the jacket			202
Metallic Components			
a. Any metallic surface unclean or contains embedded foreign matter			203
b. Any malformed, corroded, fractured, broken, chipped, or bent		102	

Source: https://assist.dla.mil -- Downloaded: 2026-11-23T00:01Z
Check the source to verify that this is the current version before use.

Defect	Critical	Major	Minor
c. Slide fastener: 3/			
1. Not specified type, size, pull, or style; movement of the slider interfered with or scoops of the chain do not mesh or interlock		103	
2. Any portion of the jacket or slide fastener tape puckered, twisted, or pleated at the slide fastener tape joining seam, when the slide fastener is open or closed			204
3. Slider does not close the slide fastener upwards		104	
4. Thong omitted, assembled length less than 2¼ inches or more than 2¾ inches			205
5. Thong not securely knotted to the pull 4/			206
6. Retainer portion is less than ½ inch or more than ¾ inch from the bottom of the jacket (see Figure 11)			207
d. Snap fastener or eyelet and washer:			
1. Any snap fastener mismated or any portion of the snap fastener assembly missing		105	
2. Any improperly clinched resulting in cutting of the leather		106	
3. Snap fastener stud not aligned with the socket causing a noticeable bulge or twist to the inner pocket, when snapped together 5/		107	
4. Snap fastener off-center by:			
(a) ½ inch or less			208
(b) More than ½ inch		108	
5. Any eyelet and washer or the snap fastener not black chemically finished, finish missing, or not uniformly finished.		109	
6. One eyelet missing			209
7. Two or more eyelets missing		110	
Leather			

Source: https://assist.dla.mil -- Downloaded: 2026-11-23T00:01Z
Check the source to verify that this is the current version before use.

Defect	Critical	Major	Minor
a. Not full grain, soft, or flexible 2/	2		
b. Fat wrinkles, loose, spongy, boardy, or flaky leather 2/	3		
c. Any grain cut, slaughter cut, cockle, open scar or scratch, brittle or bony area, or thin spot		111	
d. Any healed scar or brand, open tick mark or fly bite, or excessive large hair cells 2/		112	
e. Flesh side not smooth		113	
f. Any portion of the cloth or leather stiffened, hardened, or scorched by any process of manufacturing	4		
Mouton			
a. Any portion, stiff or boardy, bare spot, or lack of flexibility		114	
b. Any matted or knotted pile 6/		115	
Knitted cuffs and waistband			
a. Any run, dropped stitch, snag, pull, or slubby yarn		116	
b. Lacking elasticity, too tight or loose		117	
c. Wales in any cuff or waistband not in the vertical direction (see Figure 1)	5		
d. Dimensions of cuff not in accordance with Figure 15		118	
e. Elastic grinning through component		119	
Shaded Parts			
a. Any part shaded or any shade bar		120	
b. Color of any component not as specified or not uniform		121	
Cleanness			
a. Any unsightly slub, adhesive shade or size marking ticket adhesive mass, spot, or stain on the outerside of the jacket		122	
b. Two or more thread ends not trimmed to ¼ inch or less or two or			210

Source: https://assist.dla.mil -- Downloaded: 2026-11-23T00:01Z
Check the source to verify that this is the current version before use.

Defect	Critical	Major	Minor
more loose thread scraps not removed			
c. Any shade or size marking ticket not removed or any shade or size identification marking stamping visible on the assembled jacket			211
d. Any metal fastening device or sewn on shade or size marking ticket		123	
e. Any portion of the assembled jacket discolored, where the adhesive shade or size marking ticket was attached causing stiffening, hardening, scorching or damage to the leather or cloth.		124	
Components and Assembly			
a. Any component not as specified or any defect of a component or defect of assembly, not herein classified		125	
b. Any component, component part, or required operation omitted, or any operation improperly performed, not herein classified		126	
c. Any component part not cut in accordance with the patterns, not herein classified		127	
Seams and Stitching			
a. Accuracy of seaming:			
1. Any seam, hem, or attachment of any component twisted, puckered, pleated; any part of the jacket or component caught in an unrelated operation or stitching, any seam edge not properly forced out or contains any fold			212
2. Ends of stitching that are not caught in other seams or stitching:			
(a) Any not securely backstitched		128	
(b) Any secure but backstitched for a distance less than ½ inch or the backstitching is not overlapped on itself			213
3. Thread breaks:			
(a) Any not securely overstitched		129	

Source: https://assist.dla.mil -- Downloaded: 2026-11-23T00:01Z
Check the source to verify that this is the current version before use.

Defect	Critical	Major	Minor
(b) Any secure but overstitched for a distance less than one inch			214
b. Gage of stitching5:			
1. Any stitching irregular, unevenly gaged, or various stitchings not uniform 7/			215
c. Open seams: 8/			
1. Outside of the jacket:			
(a) Any ¼ inch or less			216
(b) Any more than ¼ inch but not more than one inch		130	
(c) Any more than one inch	6		
2. Inside of the jacket:			
(a) Any 1 inch or less			217
(b) Any more than 1 inch		131	
d. Raw edges: 9/			
1. Outside of the jacket:			
(a) Any more than 1/8 inch but not more than ¼ inch			218
(b) Any more than ¼ inch but not more than one inch		132	
(c) Any more than one inch	7		
2. Inside of the jacket:			
(a) Any more than ¼ inch but not more than one inch			219
(b) Any more than one inch		133	
e. Run-offs, skipped, or broken stitches:			
1. Joining seams - when resulting in an open seam use “Open Seam” classification		134	
2. Topstitching when not resulting in an open seam:			

Source: https://assist.dla.mil -- Downloaded: 2026-11-23T00:01Z
Check the source to verify that this is the current version before use.

Defect	Critical	Major	Minor
(a) Outerside of the jacket:			
(i) Any ½ inch or less			220
(ii) Any more than ½ inch		135	
(b) Innerside of the jacket:			
(i) Any one inch or less			221
(ii) Any more than one inch		136	
f. Seam and stitch type:			
1. Not specified seam or stitch		137	
2. Any looper thread visible on the assembled jacket when stitch type 401 is used			222
g. Stitch tension 10/			
1. Any loose stitching or tight stitching, resulting in breaking of the stitches, when normal pull is applied		138	
h. Stitches per inch: 11/			
1. Stitches more or less than specified:			
(a) Jacket (excluding label):			
(i) One but no more than three			223
(ii) More than 3		139	
(b) Label:			
(i) One but no more than three			224
(ii) More than 3		140	
i. Buttonholes			
1. Any omitted, not specified type, size, uncut, purling on the underside, or not securely caught in the jacket stitching pulling away		141	

Source: https://assist.dla.mil -- Downloaded: 2026-11-23T00:01Z
Check the source to verify that this is the current version before use.

Defect	Critical	Major	Minor
2. Skipped or broken stitches:			
(a) In one buttonhole			225
(b) In two buttonholes		142	
3. Stitches less than specified			
(a) One to three			226
(b) Four to seven		143	
(c) More than seven	8		
4. Any end not securely tacked:			
(a) In one buttonhole			227
(b) In two buttonholes		144	
5. Gimp omitted in one or more buttonholes or on the underside		145	
j. Buttons			
1. Any missing, loose, malformed, fractured, or broken		146	
2. Not specified in size or style 2/		147	
3. Stitches more or less than specified: (a) One but less than three		148	
(b) Three or more			228
(c) Shank missing on one or more buttons			229
4. Any surface rough, misaligned, distorted or contains any nick, burr, sharp edge, or crack		149	
Collar			
a. Top collar or undercollar twisted, any collar edge curled or any collar end not securely tacked to the jacket		150	
b. Any edge crooked, undercollar edge exposed, or any corner not uniform in shape		151	
c. Collar closing tab bulging, twisted or distorted when buttoned			230

Source: https://assist.dla.mil -- Downloaded: 2026-11-23T00:01Z
Check the source to verify that this is the current version before use.

Defect	Critical	Major	Minor
d. Off center			
1. ½ inch or less		152	
2. More than ½ inch			231
e. Rounded corners uneven in length:			
1. 3/8 inch or less			232
2. More than 3/8 inch		153	
f. Star stitching points are less than 1½ inches or more than 2½ inches apart			233
g. Center of the collar closing tab buttonhole eyelet less than 5/8 inch or more than 7/8 inch from the point of the outer free edge			234
Front Opening			
a. Fronts uneven in length at the neck or at the bottom, when the slide fastener is closed:			
1. More than 1/8 inch but not more than 3/8 inch			235
2. More than 3/8 inch		154	
b. Edges of the opening overlapped more than 1/8 inch or open more than 1/8 inch, when the side fastener is closed.		155	
c. Any facing short, tight, or twisted causing puckers or twist on the outerside of the fronts			236
d. Flap not on right side		156	
Pockets and Flaps			
a. Any pocket out of horizontal or vertical alignment by:			
1. More than 1/8 inch but not more than 3/8 inch			237
2. More than 3/8 inch but not more than ½ inch		157	
3. More than ½ inch	9		
b. Lower side edges of the pockets not mitered		158	
c. Any portion of the jacket, pocket, or flap puckered or pleated at		159	

Source: https://assist.dla.mil -- Downloaded: 2026-11-23T00:01Z
Check the source to verify that this is the current version before use.

Defect	Critical	Major	Minor
the pocket or flap joining seam or at the pencil compartment			
d. Pocket flap side edges are not even with the side edges of the pockets by more than ¼ inch or corners of the pockets and flaps not securely tacked			238
e. Pocket or flap bulging, twisted, or distorted when buttoned.			239
f. Flap buttonhole:			
1. Center of the eyelet less than ½ inch or more than 3/4 inch from the edge of the flap			240
2. More than ¼ inch off the center of the flap			241
Jacket and lining bellows			
a. Any noticeable bulge in any outer folded edge or the back does not lie smoothly			242
b. Top end of any outer folded edge, at the shoulder, unequal distance by more than ¼ inch for the jacket and ½ inch for the lining from any armhole seam		160	
c. Lower end of any outer folded edge unequal distance by more than ¼ inch for the jacket and ½ inch for the lining from any side seam		161	
Sleeves			
a. Right sleeve in the left armhole or left sleeve in the right armhole or any sleeve, in its proper armhole, installed in a reverse position		162	
b. Any pleats at any armhole or any tightness at any armhole seam causing puckers on any front or back			243
c. Any sleeve lapped on the top of any front or the back at any armhole or undersleeve overlapping any top sleeve at any back arm seam		163	
Label and property markings			
a. Identification label:			

Source: https://assist.dla.mil -- Downloaded: 2026-11-23T00:01Z
Check the source to verify that this is the current version before use.

Defect	Critical	Major	Minor
1. Size missing, incorrect, or illegible		164	
2. Other than size information incomplete, incorrect, or illegible			244
3. Misplaced, off center of the back by more than ½ inch, stitching omitted on one or more edges or appear on the exterior of the jacket			245
b. Property markings:			
1. Missing, incorrect, incomplete, or illegible	10		
2. Letters less than one inch in height or width			246
3. Perforation so closely spaced as to result in a tear in the leather or perforations cut any flap seam		165	
4. Letters are off center by more than ½ inch		166	
c. Bar code labels/markings 1. Bar code omitted, incorrect, illegible, not attached where specified.		167	
2. Bar code not visible on folded, packaged item.		168	
3. Bar code attachment causes damage to the item.		169	
4. Bar code not readable by scanner.			247
5. Human readable interpretation (HRI) omitted or illegible.			248
<u>Hanger</u> a. Ends not securely attached or not attached as specified.			249
b. Less than 3-7/8 inches or more than 4-1/8 inches long or width less than 5/16 inch or more than 7/16 inch.			250
c. Not stitched together along each edge or insecurely formed.			251
d. Located more than 1-1/8 inches or less than 7/8 inch below the collar seam			252
e. Misplaced, off center of the back by more than ½ inch			253

Source: https://assist.dla.mil -- Downloaded: 2026-11-23T00:01Z
Check the source to verify that this is the current version before use.

1/ ASTM D3990 shall be used to aid in identifying defects when needed. Any defect that is not identified in Table IX but is on the finished jacket and is cited under ASTM D3990 shall be classified as a defect. The defect classification of critical, major or minor shall be at the discretion of the government.
2/ The defect shall be classified as critical when it seriously affects the serviceability or appearance, otherwise it is to be classified as a major defect.
3/ The slide fastener shall be checked for proper function by opening and closing the slide fattener at least three times along its full length.
4/ With the slide fastener fully open, one end of the thong shall be grasped by one hand, and normal hand force shall be applied, causing the slider to move, closing the slide fastener along its entire length.
5/ The snap fastener shall be checked for proper function and attachment by snapping closed and unsnapping the snap fastener at least three times.
6/ The defect shall be classified major, when it seriously affects the serviceability or appearance, otherwise it is to be classified as a minor defect.
7/ The gage of stitching defect shall be classified only when the condition exists for more than 2 inches on any row of stitching.
8/ A seam shall be classified as open when one or more stitches joining a seam are broken, or when two or more continuous skipped stitches or run-offs occur. On double stitched seams, a seam shall be classified as open when either one or both sides of the seam contain any of the aforementioned for a single stitched seam.
9/ Any edge that should be turned under and is not, but is securely caught in the stitching, shall be classified as a raw edge. Any raw edge that is not securely caught in the stitching shall be classified as an open seam.
10/ Puckering is evidence of tight tension or gathering of the material. When puckering is evident, and is not caused by the gathering of the material, the stitching shall be inspected by exerting normal pull in the lengthwise direction of the stitching, by pulling taut to straighten out the seam. The gathering of the material shall be classified as an accuracy of seaming defect.
11/ The stitches per inch defect shall be classified only when the condition exists for more than 3 inches on any row of stitching.

4.5.5 Dimensional examination. The slide fastener of each jacket to be measured shall be fully closed. The pocket flaps shall be buttoned, the snap fastener shall be snapped closed, and the collar closing tab shall be folded back and buttoned. The jacket shall be laid flat, without tension on a smooth, flat surface so that any creases and wrinkles shall not affect the measurement. The bellows shall be flat and in the closed position. The inside pocket measurements shall be taken with the jacket open. Refer to figures 13 to 15 when taking measurements for A through U. The jacket shall be measured as follows:

A. 1/2 Chest - Measurement shall be taken on a closed jacket across the front at the base of the armhole from folded edge to folded edge to seam line of gusset, not including gusset.

B. 1/2 Waist - Measurement shall be taken across front of closed jacket above ribbing seam line at bottom of jacket.

C. Back Length - Center back length shall be taken down center from center back of the undercollar seam to bottom of jacket at seam line to ribbing.

Source: https://assist.dla.mil -- Downloaded: 2026-11-23T00:01Z
Check the source to verify that this is the current version before use.

D. Sleeve Inseam - Measurement shall be taken from base of armhole seam, from center of the gusset, along underarm to bottom edge of leather at seam line to knitted wristlet.

E. Undercollar length - Measurement shall be taken along base of the undercollar at neckline from collar edge to collar edge, with collar in flat position.

F. Undercollar height - Measurement shall be taken at center back from neckline seam to finished edge of collar.

G. Patch pocket, length - Measurement shall be taken at center of finished pocket from top edge to bottom edge including the flap (see Figure 14).

H. Patch pocket, width - Measurement shall be taken at center of finished pocket from side edge to side edge.

J. Pocket flap, at center - Measurement shall be taken at center of finished pocket flap from top edge to bottom edge.

K. Pocket flap, length, at sides - Measurement shall be taken at each side of finished pocket flap from top edge to bottom edge.

L. Pocket flap, width - Measurement shall be taken at top of finished pocket flap from side edge to side edge.

M. Pencil pocket welt, length - Measurement shall be taken at center of welt from seam to seam.

N. Pencil pocket welt, width - Measurement shall be taken at center from top edge of welt to bottom welt seam.

P. Pencil pocket, depth - Measurement shall be taken from the welt opening to the bottom of the finished pocket.

R. Inside pocket welt, length - Measurement shall be taken from seam to seam.

T. Inside pocket welt, width - Measurement shall be taken from top edge of welt to welt seam.

U. Inside pocket, depth - Measurement shall be taken from the top of welt opening, including the welt, to the bottom of the pocket.

4.5.6 Classification of defects for the dimensional examination of the jackets.

Source: https://assist.dla.mil -- Downloaded: 2026-11-23T00:01Z
Check the source to verify that this is the current version before use.

TABLE IX. Dimensional defects for finished jacket.

Assembled Measurements	**Defect**	Major
Finished Jacket	Any measurement deviating from the measurements specified in 3.6, Table V and Table VI, and applicable tolerances, shall be identified as a dimension defect. Dimensional defects shall be categorized as Major defects.	101
Equal Length for Sleeve	The variation in length between the left and right sleeve inseams shall be identified as a dimensional defect when it exceeds ½ inch. This defect shall be categorized a Major defect.	102

4.5.7 Toxicity test. When required (see 6.2), an acute dermal irritation study and a skin sensitization study shall be conducted on laboratory animals. When the results of these studies indicate material is not a sensitizer or irritant, a Repeat Insult Patch Test shall be performed in accordance with the Modified Draize Procedure (see 2.3). If the toxicity requirement (see 3.9) can be demonstrated with historical use data, toxicity testing may not be required (see 6.2).

5. PACKAGING

5.1 Packaging. For acquisition purposes, the packaging requirements shall be as specified in the contract or order (see 6.2). When actual packaging of materiel is to be performed by DoD or in-house contractor personnel, these personnel need to contact the responsible packaging activity to ascertain packaging requirements. Packaging requirements are maintained by Inventory Control Point's packaging activities within the Military Service or Defense Agency, or within the military service's system commands. Packaging data retrieval is available from the managing Military Department's or Defense Agency's automated packaging files, CD-ROM products, or by contacting the responsible packaging activity.

6. NOTES

6.1 Intended use. The jacket covered by this specification is intended to be worn in the intermediate temperature range by flight personnel.

6.2 Acquisition requirements. Acquisition documents should specify the following:

a. Title, number, and date of this specification, including any amendments.
b. Applicable Government documents including any revisions and non-government documents cited under Section 2.
c. Sizes and lengths, quantity desired (see 1.2).
d. National stock number.
e. Applicable Government patterns, including revisions.
f. First article and conformance inspection requirements (4.1 through 4.5.5.1).
g. Name and address of the first article inspection facility; and the name and address of the Government activity responsible for conducting the first article inspection program.

Source: https://assist.dla.mil -- Downloaded: 2026-11-23T00:01Z
Check the source to verify that this is the current version before use.

h. Packaging requirements (see 5.1).
i. Toxicity testing (see 2.3, 3.9 and 4.5.7).

6.3 Information requests. For access to information such as patterns, drawings, standard shade samples of cloth etc. go to Defense Supply Center Philadelphia's website for their Specification/Pattern/Drawing Request form http://www.dla.mil/TroopSupport/ClothingandTextiles/SpecRequest.aspx. Complete the request form and then submit. Requests to use equivalent materials and/or components or to make changes to the pattern should be sent to the contracting officer for approval by the military services.

6.4 Changes from previous issue. Marginal notations are not used in this revision to identify changes with respect to the previous issue due to the extent of the changes.

6.5 Subject term (key word) listing.

Apparel	Knit cuffs and waistband
Mouton	Patterns
Textiles	

Source: https://assist.dla.mil -- Downloaded: 2026-11-23T00:01Z
Check the source to verify that this is the current version before use.

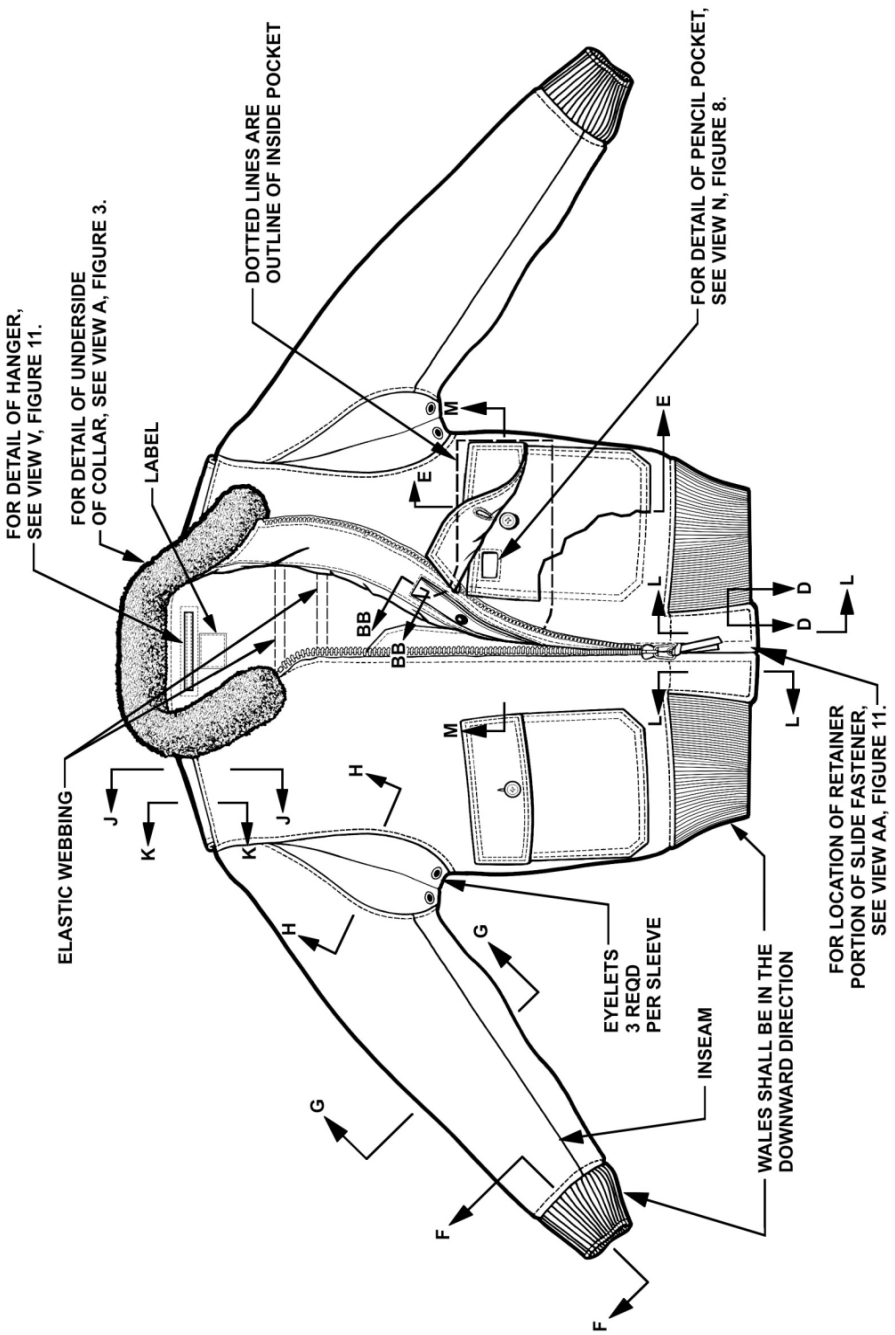

FIGURE 1. Front view.

Source: https://assist.dla.mil -- Downloaded: 2026-11-23T00:01Z
Check the source to verify that this is the current version before use.

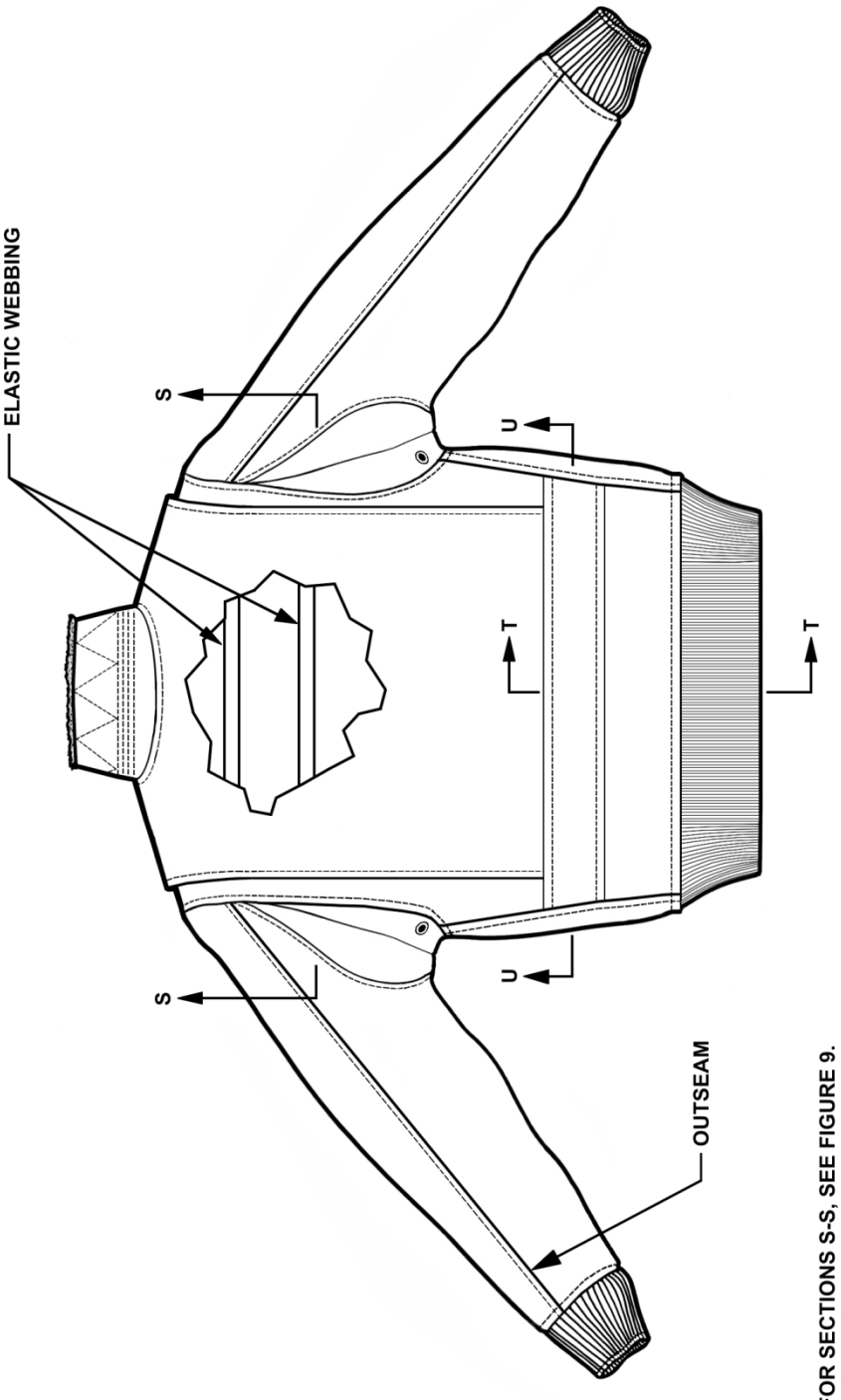

FIGURE 2. Back view.

Source: https://assist.dla.mil -- Downloaded: 2026-11-23T00:01Z
Check the source to verify that this is the current version before use.

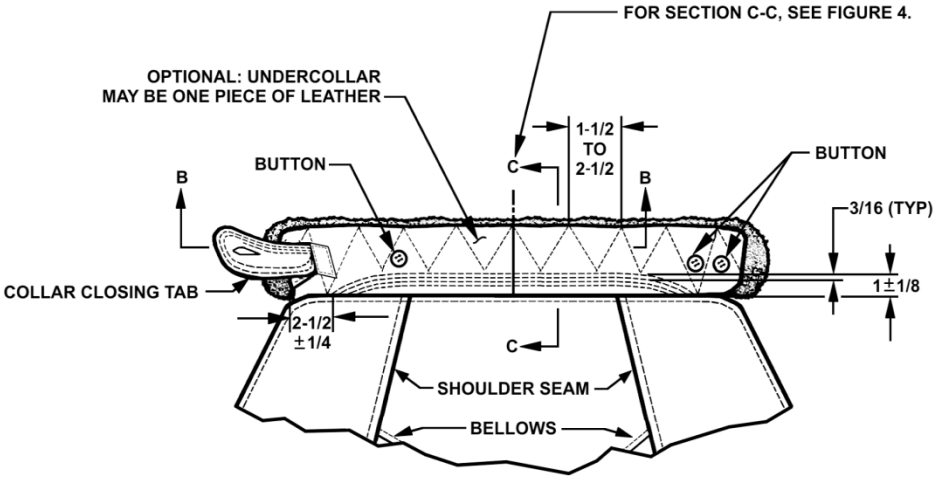

UNDERSIDE OF COLLAR
VIEW A

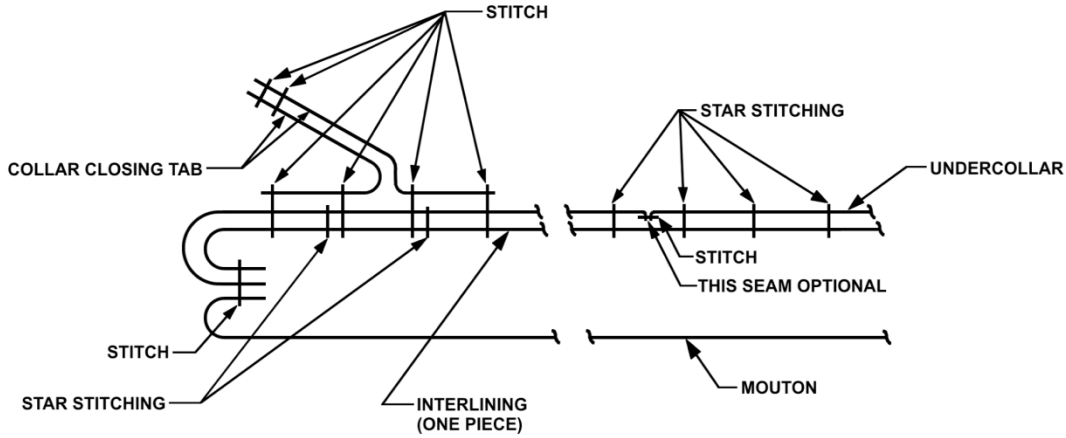

SECTION B-B

DIMENSIONS IN INCHES

FIGURE 3. Collar sections.

Source: https://assist.dla.mil -- Downloaded: 2026-11-23T00:01Z
Check the source to verify that this is the current version before use.

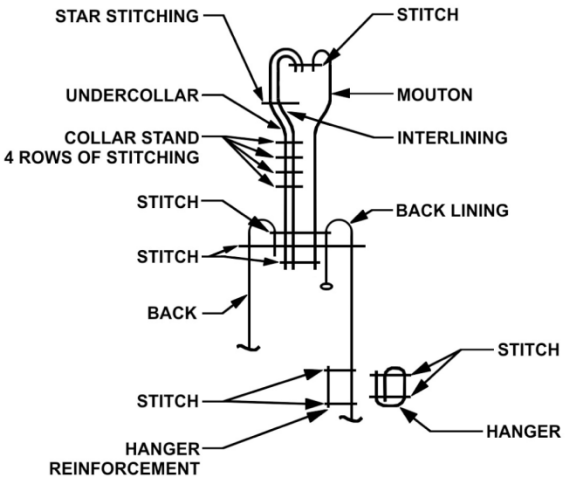

SECTION C-C

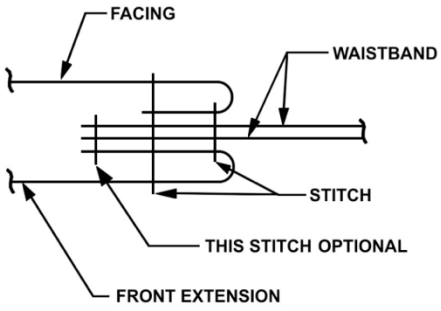

SECTION D-D

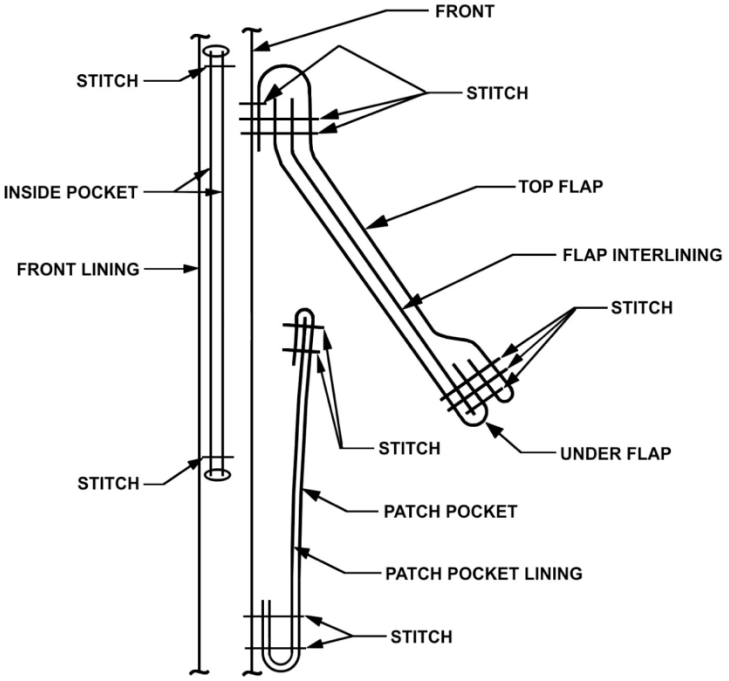

SECTION E-E

⬭ = OVEREDGE STITCHING

FIGURE 4. Collar and jacket sections.

Source: https://assist.dla.mil -- Downloaded: 2026-11-23T00:01Z
Check the source to verify that this is the current version before use.

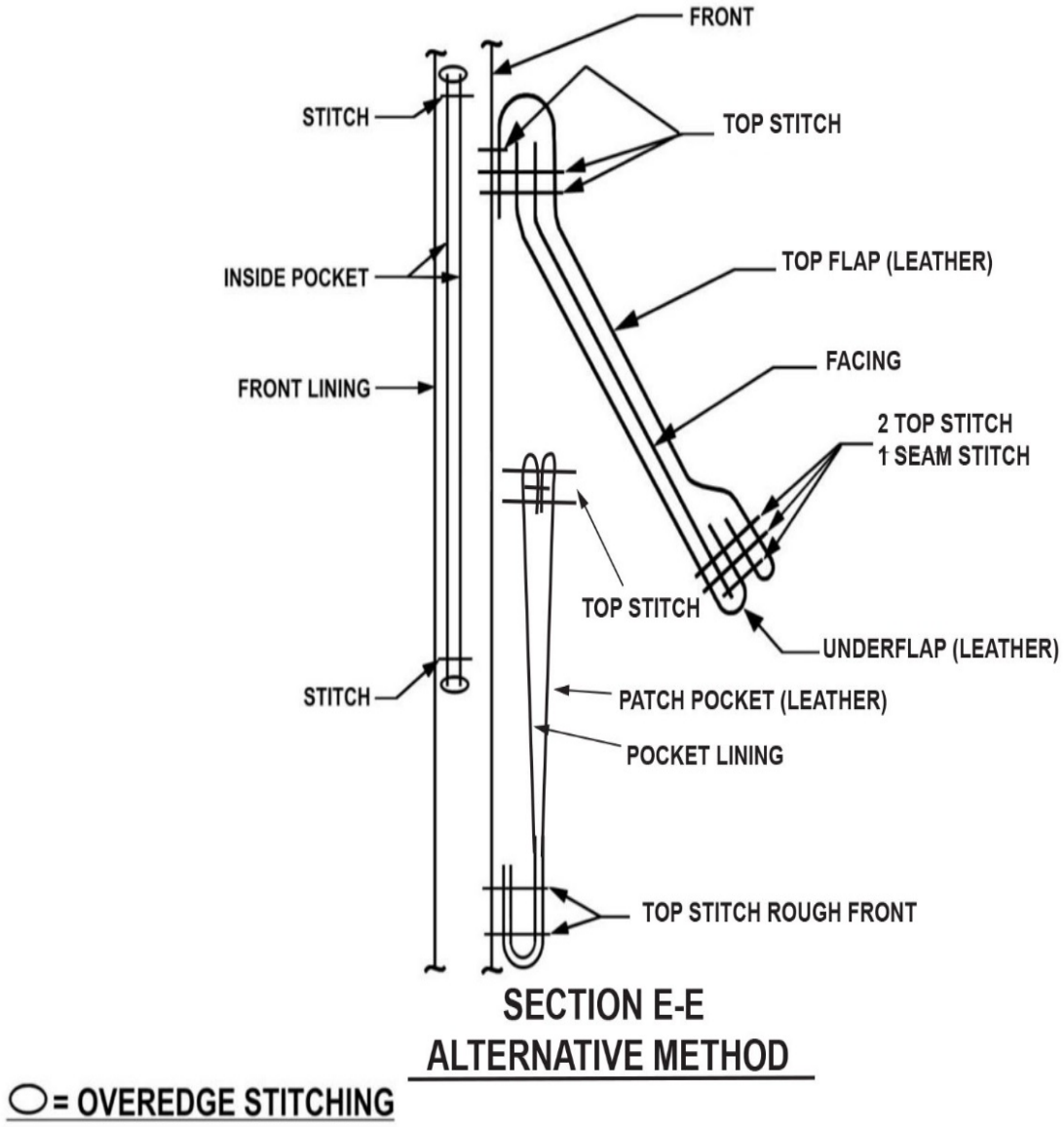

FIGURE 5. Alternate patch pocket.

Source: https://assist.dla.mil -- Downloaded: 2026-11-23T00:01Z
Check the source to verify that this is the current version before use.

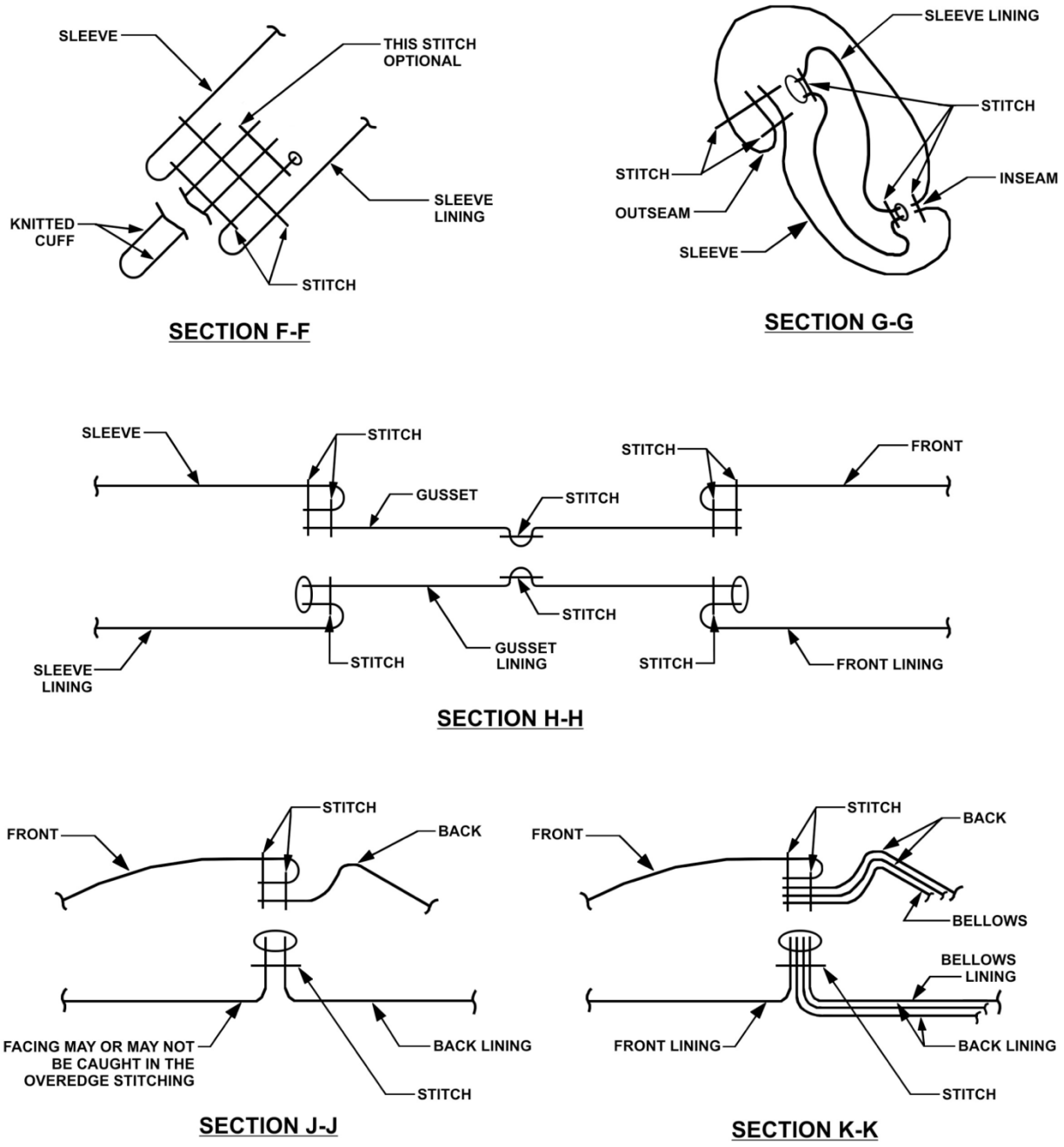

FIGURE 6. Jacket sections.

Source: https://assist.dla.mil -- Downloaded: 2026-11-23T00:01Z
Check the source to verify that this is the current version before use.

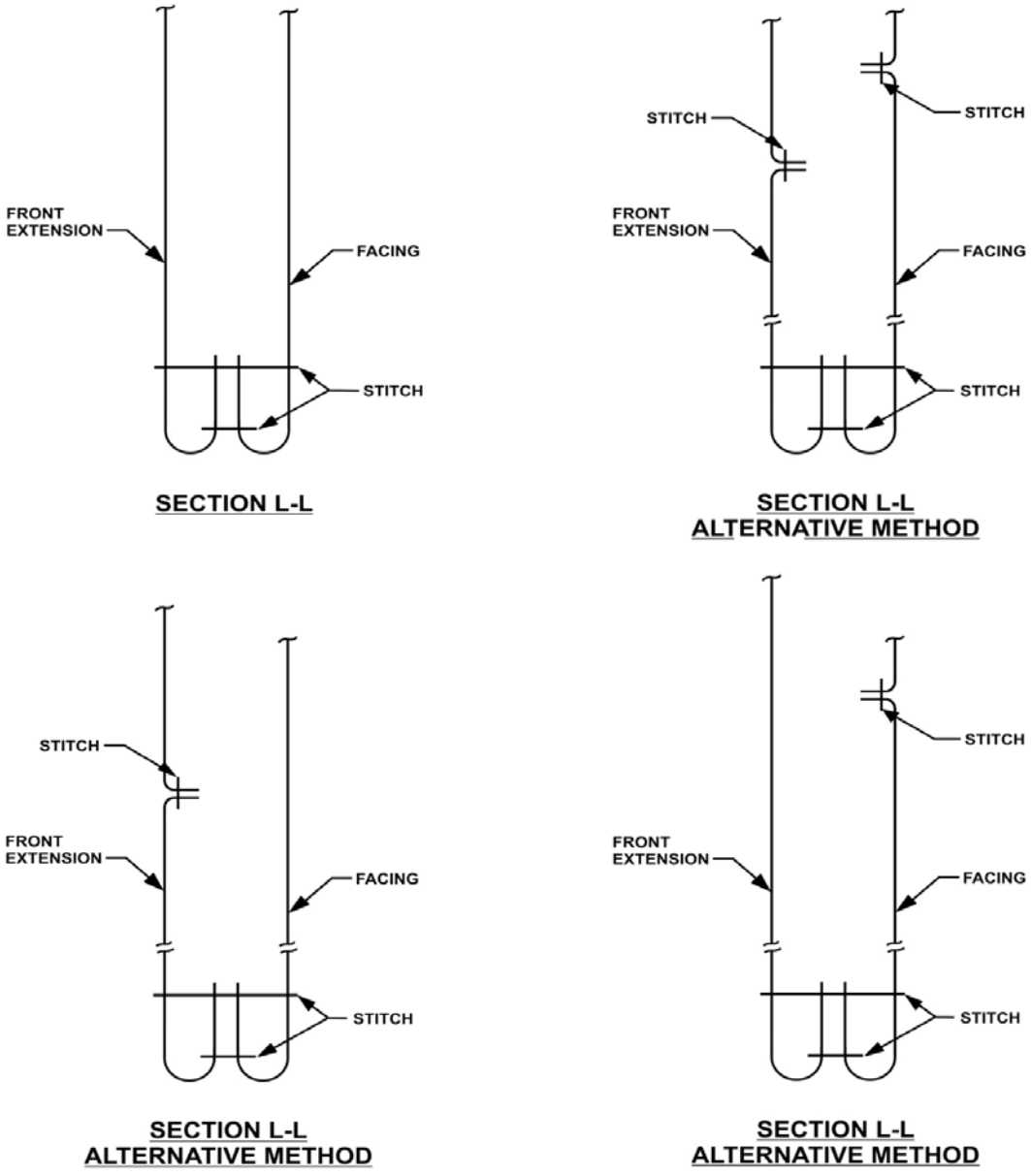

FIGURE 7. Four methods of section L-L construction.

Source: https://assist.dla.mil -- Downloaded: 2026-11-23T00:01Z
Check the source to verify that this is the current version before use.

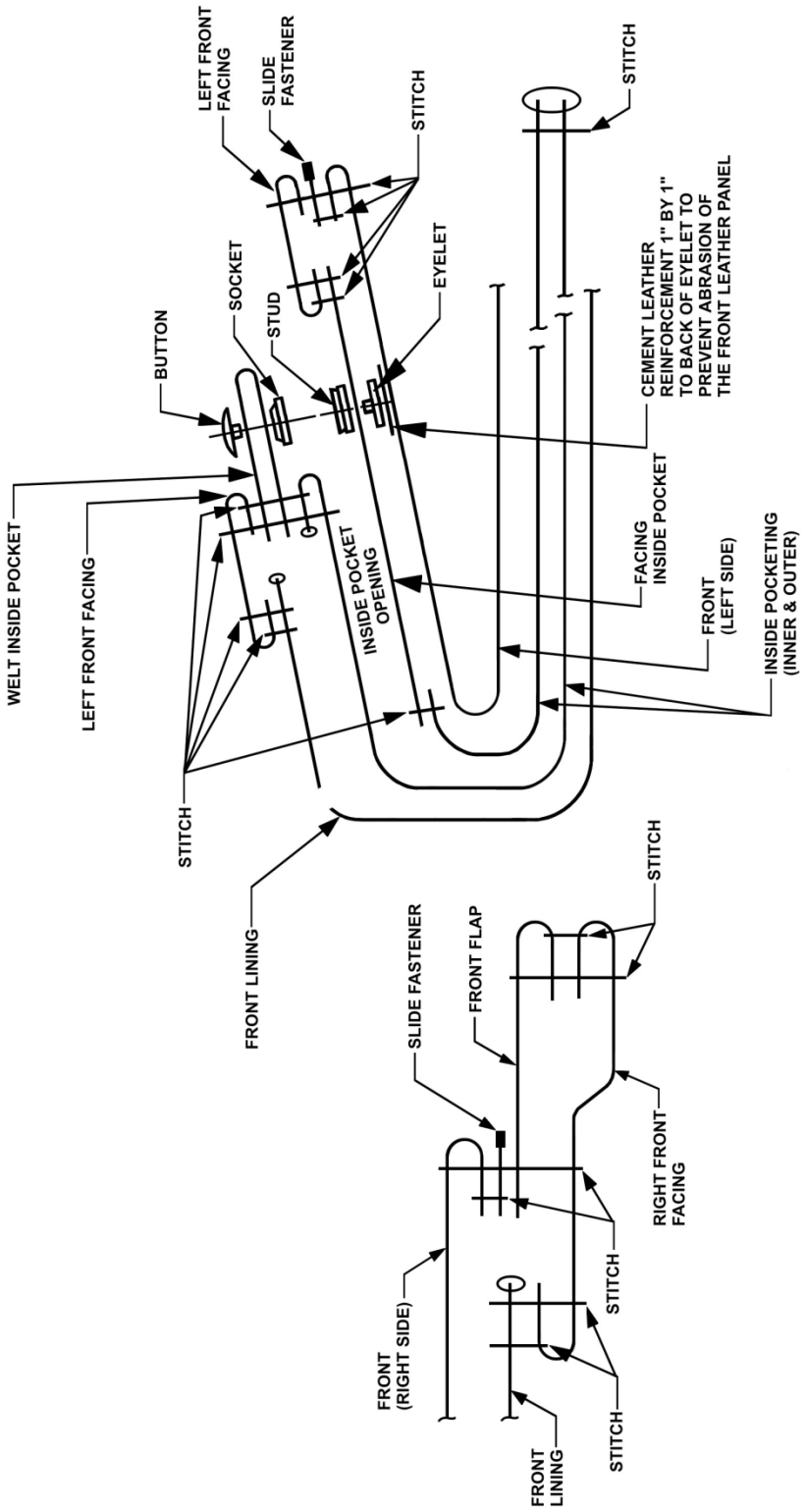

FIGURE 8. Jacket section.

Source: https://assist.dla.mil -- Downloaded: 2026-11-23T00:01Z
Check the source to verify that this is the current version before use.

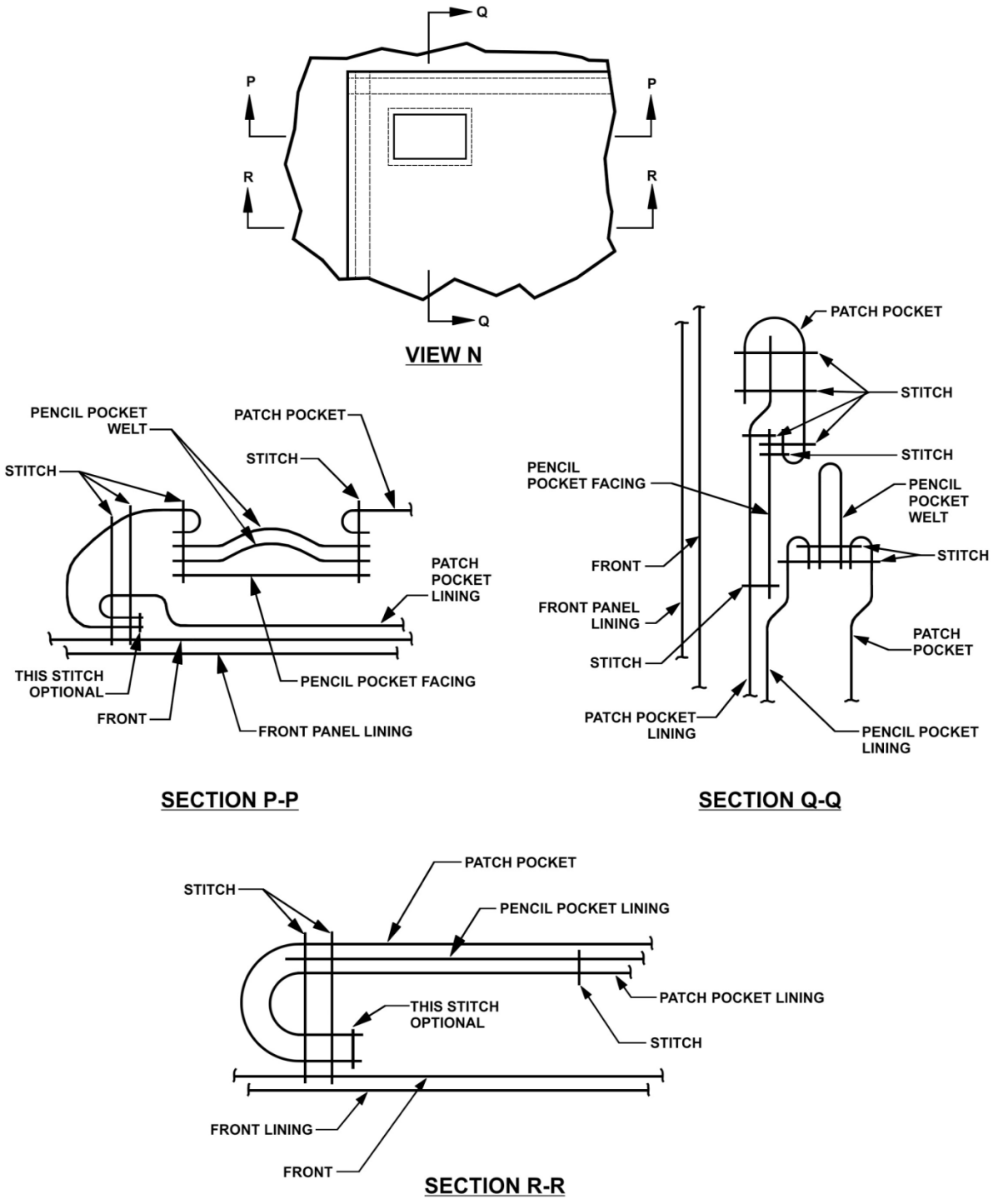

FIGURE 9. Pencil pocket sections.

Source: https://assist.dla.mil -- Downloaded: 2026-11-23T00:01Z
Check the source to verify that this is the current version before use.

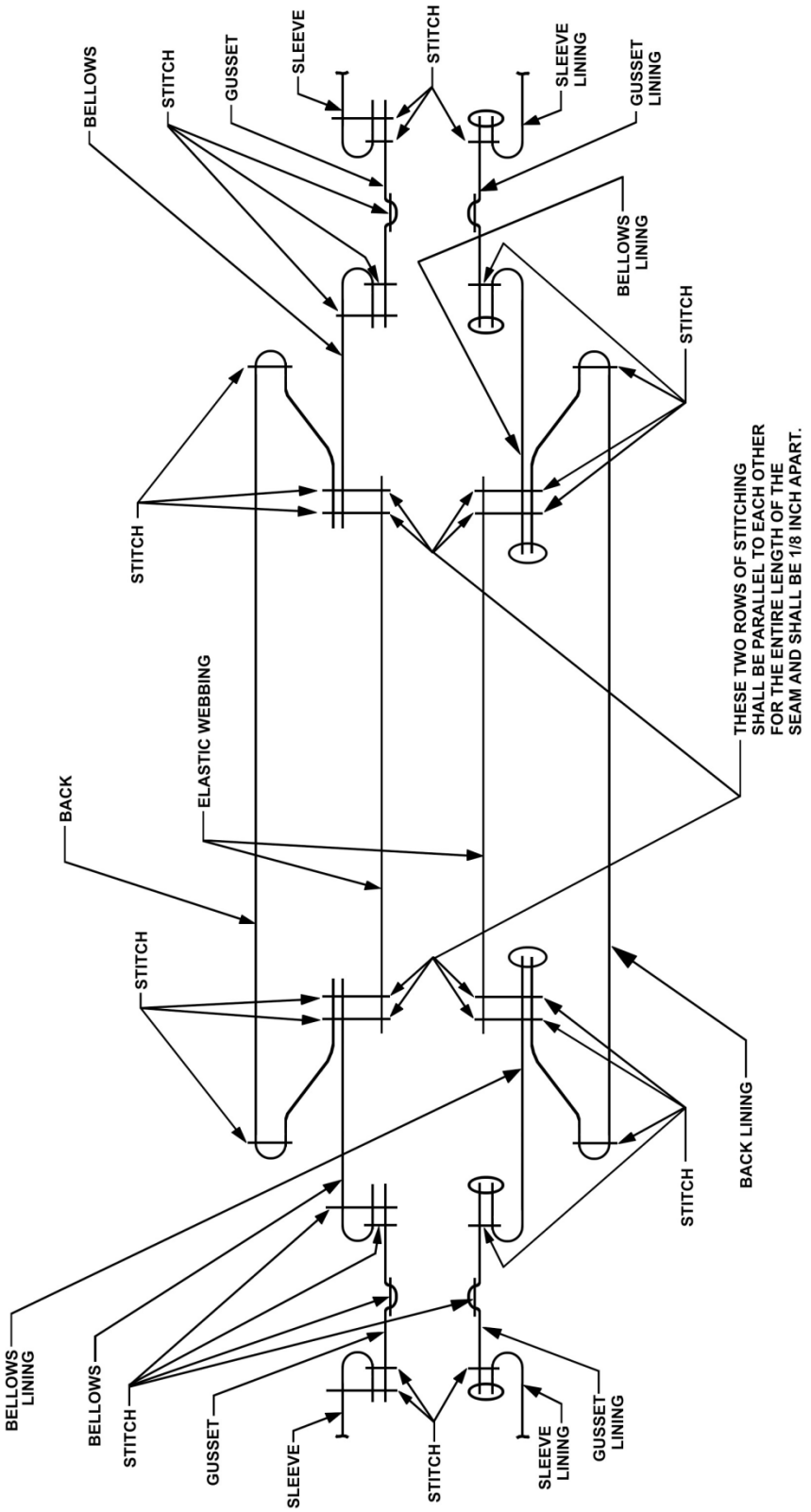

SECTION S-S

○ = OVEREDGE STITCHING

FIGURE 10. Jacket section.

Source: https://assist.dla.mil -- Downloaded: 2026-11-23T00:01Z
Check the source to verify that this is the current version before use.

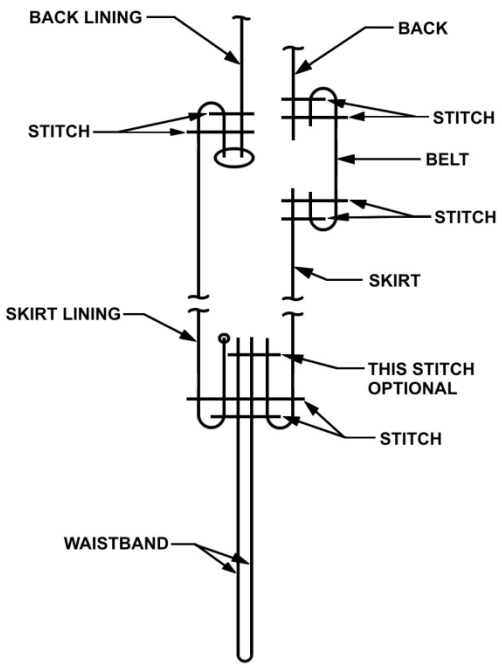

SECTION T-T

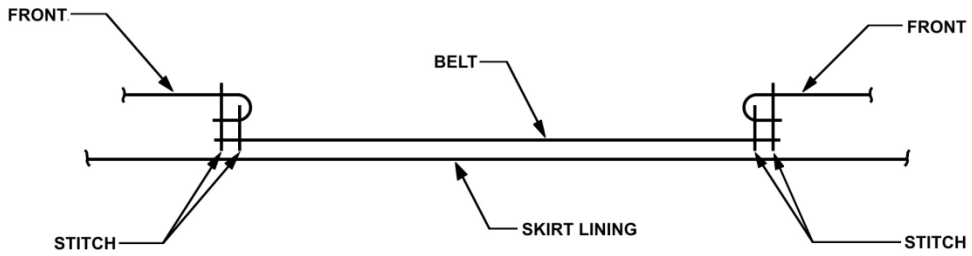

SECTION U-U

⬭ = OVEREDGE STITCHING

FIGURE 11. Jacket sections.

Source: https://assist.dla.mil -- Downloaded: 2026-11-23T00:01Z
Check the source to verify that this is the current version before use.

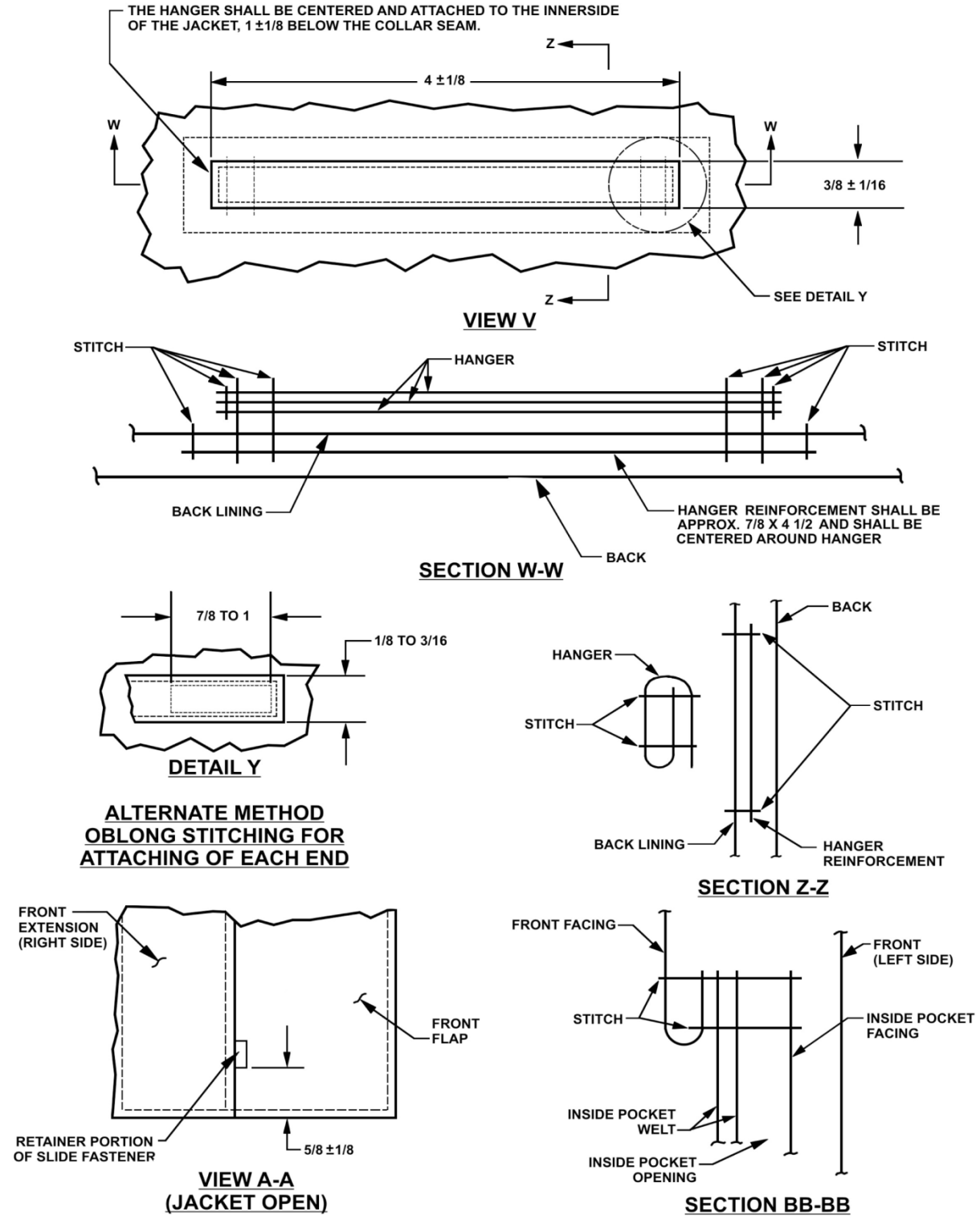

FIGURE 12. Hanger and jacket sections and view locating retainer portion of the slide fastener.

Source: https://assist.dla.mil -- Downloaded: 2026-11-23T00:01Z
Check the source to verify that this is the current version before use.

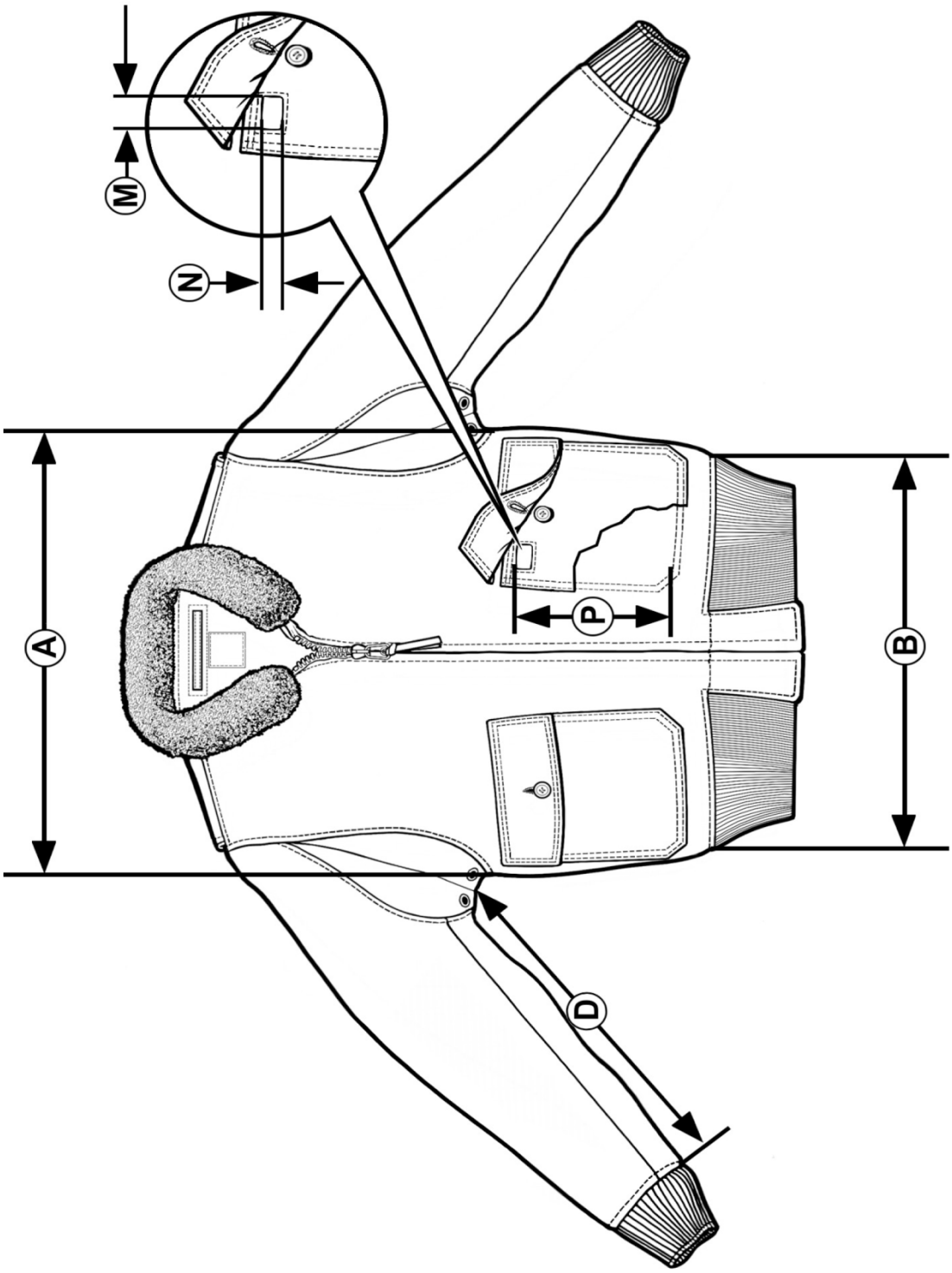

FIGURE 13. Front jacket view and pencil pocket.

Source: https://assist.dla.mil -- Downloaded: 2026-11-23T00:01Z
Check the source to verify that this is the current version before use.

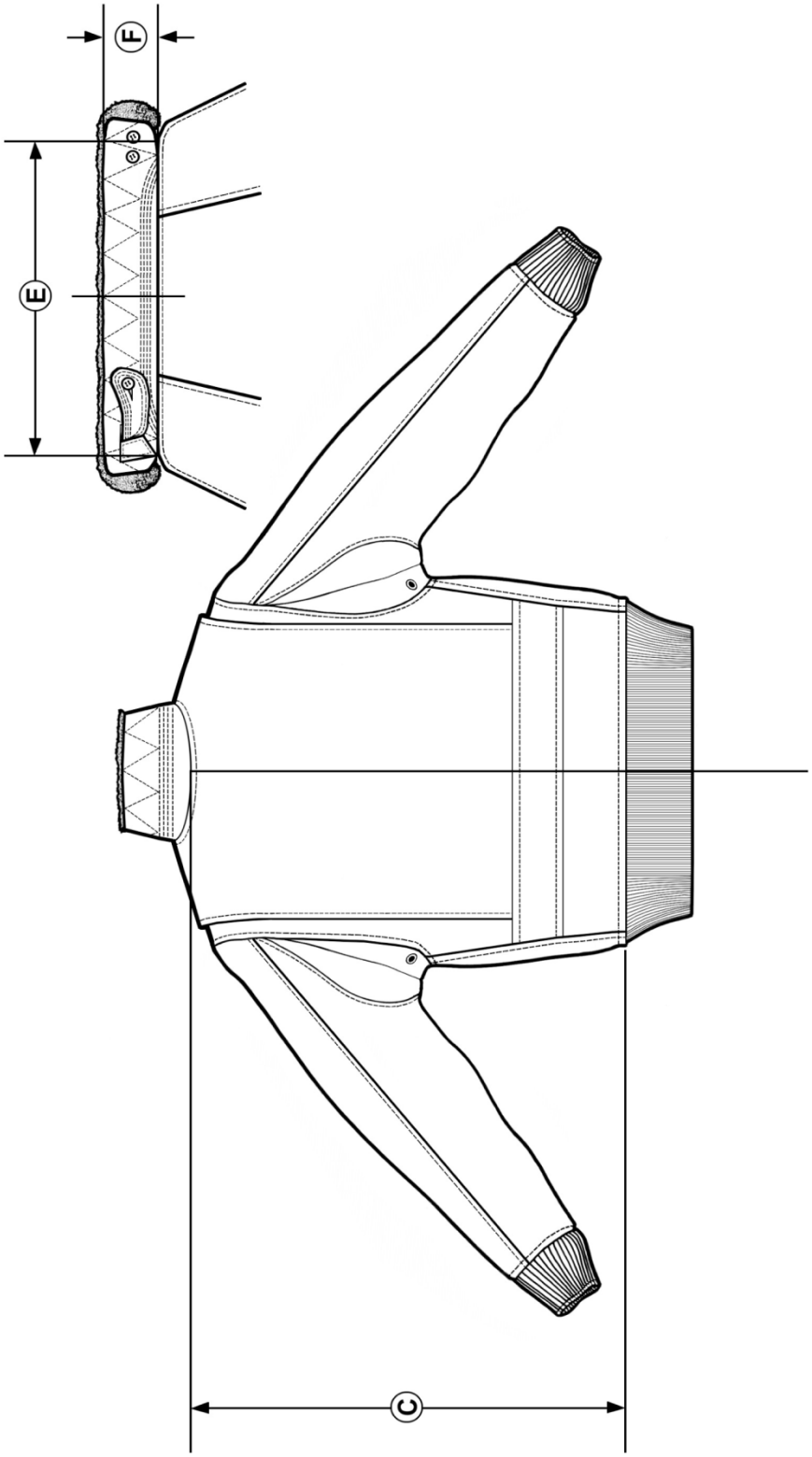

FIGURE 14. Back jacket view and back collar view.

Source: https://assist.dla.mil -- Downloaded: 2026-11-23T00:01Z
Check the source to verify that this is the current version before use.

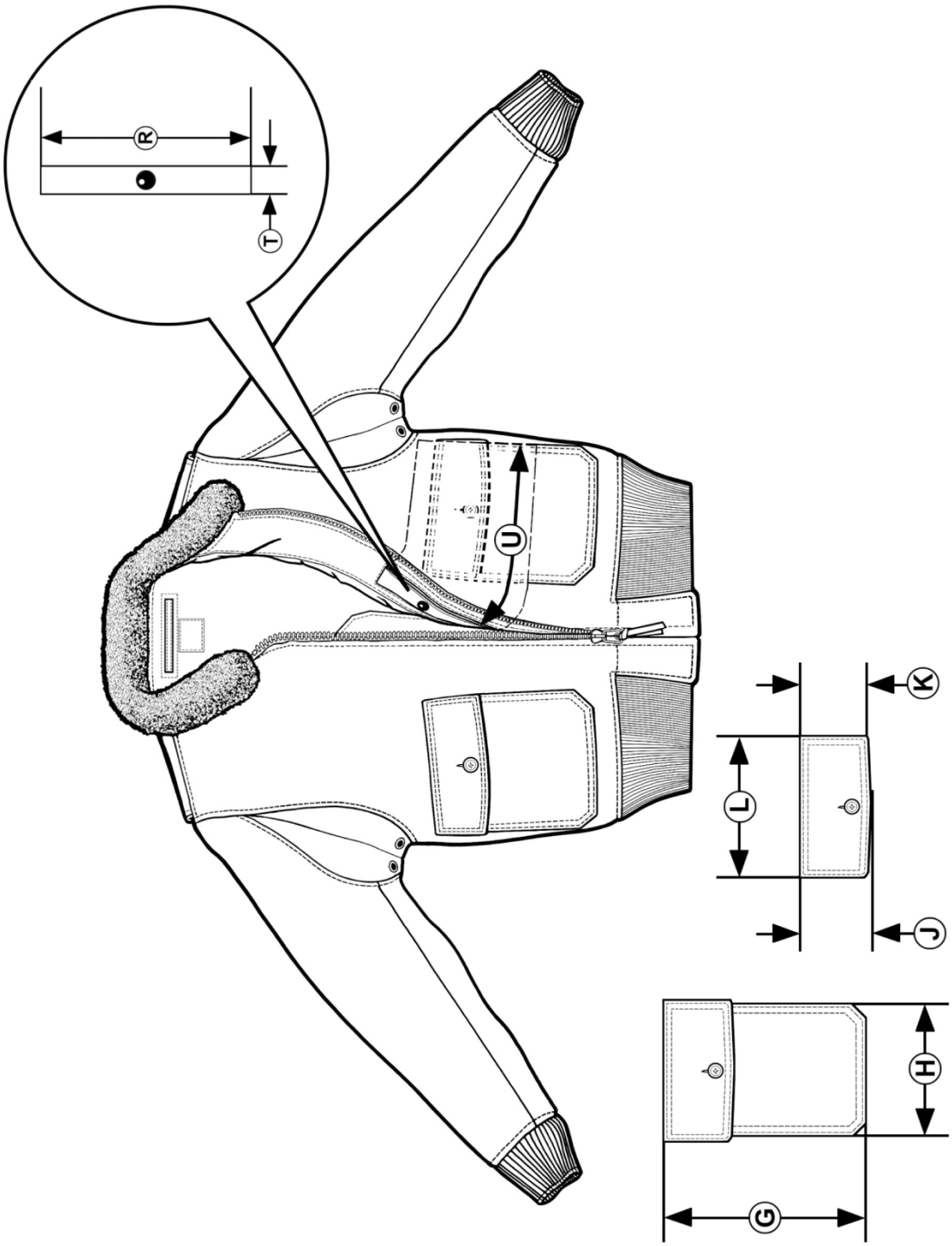

FIGURE 15. Front jacket, patch pocket, pocket flap and inside welt views.

Source: https://assist.dla.mil -- Downloaded: 2026-11-23T00:01Z
Check the source to verify that this is the current version before use.

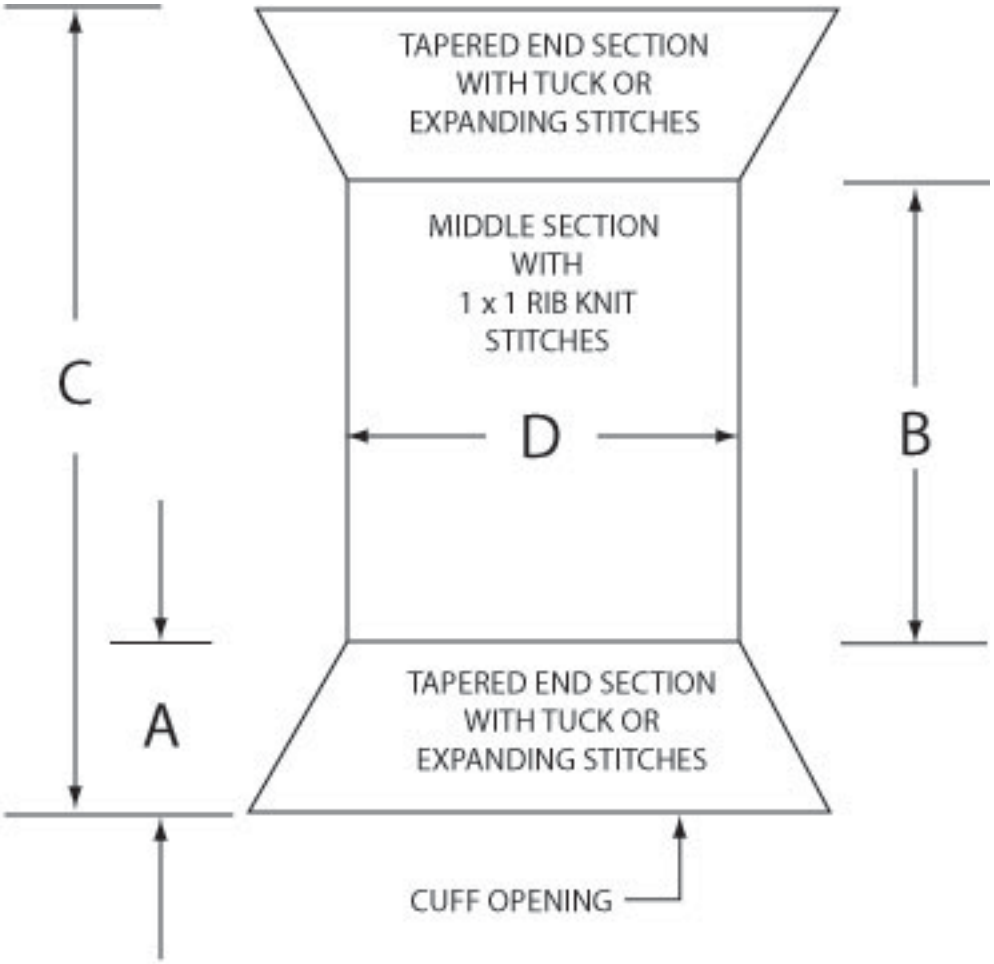

KNIT CUFF FINISHED DIMENISONS:

A. Tapered end cuff length:	2 inches (minimum)
B. Middle cuff length:	4-1/2 inches (minimum)
C. Overall cuff length:	8-3/4 to 9-1/2 inches
D. Half cuff width:	2-1/4 to 2-3/4 inches

NOTES:

1. The above dimensions represent the cuff prior to attachment to the jacket.
2. The measurements shall be taken with the cuff laid on a flat surface.

FIGURE 16. Knit cuff.

Source: https://assist.dla.mil -- Downloaded: 2026-11-23T00:01Z
Check the source to verify that this is the current version before use.

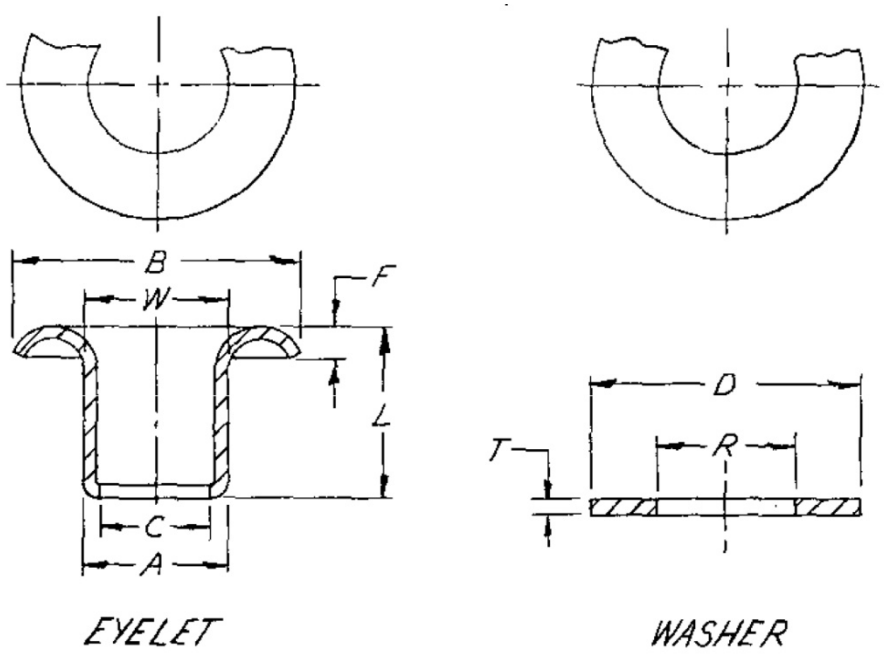

REQUIREMENTS:

Dimensions and weight for eyelet:

A = 0.200 (± 0.004) INCH
B = 0.300 (± 0.007) INCH
C = 0.177 (± 0.003) INCH
F = 0.026 (± 0.026) INCH
W = 0.205 (± 0.005) INCH
L = 0.213 (± 0.005) INCH
WT LB/1000 (MINIMUM) = 0.591

Dimensions for washer:

T = 0.020 (+ 0.004, -0.002) INCH
D = 0.450 (± 0.003) INCH
R = 0.220 (± 0.002) INCH

Material for eyelet and washer shall be brass.

Eyelet and washer shall have a black chemical finish.

FIGURE 17. Eyelet and washer.

Source: https://assist.dla.mil -- Downloaded: 2026-11-23T00:01Z
Check the source to verify that this is the current version before use.

CONCLUDING MATERIAL

Custodians:
Navy - AS
DLA - CT

Preparing activity:
Navy - AS

Review activity:
Navy - NU

Project 8415-2020-018

NOTE: The activities listed above were interested in this document as of the date of this document. Since organizations can change, you should verify the currency of the information above using the ASSIST Online database at https://assist.dla.mil.

Source: https://assist.dla.mil -- Downloaded: 2026-11-23T00:01Z
Check the source to verify that this is the current version before use.