INCH-POUND

MIL-DTL-85731/1C
05 October 2017
SUPERSEDING
MIL-F-85731/1B
w/AMENDMENT 2
26 June 1995

DETAIL SPECIFICATION SHEET

FASTENER, ELECTRONIC EQUIPMENT, POSITIVE SELF-LOCKING

This specification is approved for use by all
Departments and Agencies of the Department of Defense.

The requirements for acquiring the product described herein shall consist of this specification sheet and MIL-F-85731.

PERFORMANCE REQUIREMENTS:

1. The fastener shall lock in increments of not more than 30° (for dash numbers -1 through -4; see table I) and 15° (for dash numbers -5 through -10; see table II).

2. The fastener shall tighten by turning the knob clockwise. It shall unlock by pulling and turning, or in some fasteners just turning the knob counter-clockwise. No tool shall be required to tighten, lock or unlock the fastener.

3. The fastener shall not unlock when a torque of 125 inch-pounds is applied to dash numbers -1 and -2, or when 75 inch-pounds is applied to dash numbers -3 and -4.

4. The fastener shall meet the loads specified in tables I, II, III and IV. Orientation shall be such that the load line (the line from the pin center to the contact point between the locking collar and the equipment hook) is at an approximate angle of 45º (see figure 1).

DESIGN REQUIREMENTS:

1. The configuration of the fastener shall permit the latch assembly to remain oriented in a position so as not to interfere with the installation or removal of the weapon replaceable assembly (wra).

Source: https://assist.dla.mil -- Downloaded: 2026-11-28T07:23Z
Check the source to verify that this is the current version before use.

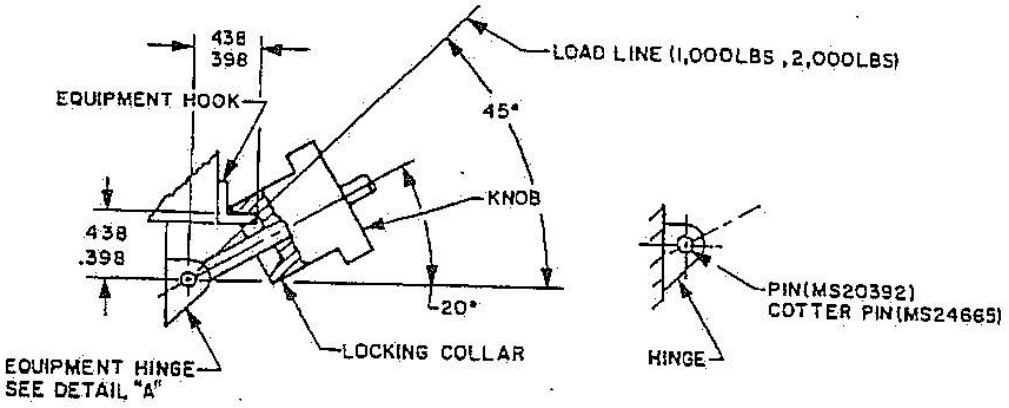

Detail "A"

FIGURE 1. Fastener loads.

Threads shall be in accordance with MIL-S-7742 or SAE AS8879, UNF-2A, UNF-3A, or UNJF-3A and heat treated.

Materials:

Screw	Corrosion Resistant Steel (CRES) 316 (UNS S31600) in accordance with SAE AMS-QQ-S-763 condition A, or 17-4 PH (UNS S17400) in accordance with SAE AMS5643 condition H1025.
Washer	Nylon 6/6 in accordance with L-P-410; NAS 1515 H5H Plastic or synthetic rubber.
Knob	
CRES	CRES 316 (UNS S31600) in accordance with SAE AMS-QQ-S-763 condition A or PM SS316L.
Aluminum	Aluminum Alloy 2024 T4 (UNS A92024) in accordance with SAE AMS-QQ-A-225/6 and ASTM B211 or Aluminum Alloy 2024 T3511 (UNS A92024) in accordance with SAE AMS-QQ-A-200/3.
Washer stop	CRES 301 (UNS S30100) or 302 (UNS S30200) in accordance with SAE AMS5901 or SAE AMS5516 respectively.
Locking collar	CRES 316 (UNS S31600) or CRES 304 (UNS S30400) in accordance with SAE AMS-QQ-S-763 condition A. Optional material: CRES 15-5PH in accordance with SAE AMS5357, condition H1000 Rockwell Hardness 33 to 39 HRC or PM SS316L-R.

Source: https://assist.dla.mil -- Downloaded: 2026-11-28T07:23Z
Check the source to verify that this is the current version before use.

Retaining Ring	PH15-7 Mo in accordance with SAE AMS5520.
Hook Alloy Steel:	4130 Alloy Steel (UNS G41300) in accordance with SAE AMS-S-6758, or SAE AMS6350, SAE AMS6351 or SAE AMS6345; or 4140 Alloy Steel (UNS G41400) (investment casting) in accordance with SAE AMS6382 and SAE AMS6349 . Heat treat in accordance with SAE AMS-H-6875 to Rockwell Hardness 39 to 43 HRC.
Corrosion Resistant Steel (CRES):	CRES 410 (UNS S41000) condition T, in accordance with SAE AMS-QQ-S-763 or ASTM A240/A240M, class 410; CRES 17-4PH (UNS S17400) in accordance with SAE AMS5343, SAE AMS5643 or MIL-S-81591; or CRES 17-7PH (UNS S17700) in accordance with SAE AMS5528 or SAE AMS5529. Heat treat in accordance with SAE AMS-H-6875 as follows: CRES 410 Rockwell Hardness 39 HRC minimum; CRES 17-4PH (wrought) – to condition H1025, Rockwell Hardness 34 to 42 HRC; or CRES 17-4PH (cast) – to condition H1000, Rockwell Hardness 36 to 43 HRC; or CRES 17-7PH – to condition H1000 or TH1050 in accordance with SAE AMS2759, SAE AMS5528 or SAE AMS5529.
Spacer stop	CRES 303S (UNS S30300), or 303SE (UNS S30323) in accordance with ASTM A582/A582M, condition A or ASTM A484/A484M; CRES 304 (UNS S30400) in accordance with ASTM A269/A269M.
Hinge Alloy Steel:	4140 Alloy Steel (UNS G41400) (investment casting) in accordance with SAE AMS6349 and SAE AMS6382. Heat treat in accordance with SAE AMS-H-6875 Rockwell Hardness 39 to 43 HRC.
CRES:	CRES 17-4PH (UNS S17400) in accordance with SAE AMS5643 or SAE AMS5343. Heat treat in accordance with SAE AMS-H-6875 to condition H1025 (wrought – Rockwell Hardness 34 to 42 HRC) or condition H1000 (cast – Rockwell Hardness 36 to 43 HRC).

Finish:

All CRES Components (except sintered [power metal] parts)	Passivate in accordance with ASTM A967/A967M
Aluminum Components:	Anodize in accordance with MIL-A-8625, Type II, Class 1 or Type III, Class 1 or 2.

Source: https://assist.dla.mil -- Downloaded: 2026-11-28T07:23Z
Check the source to verify that this is the current version before use.

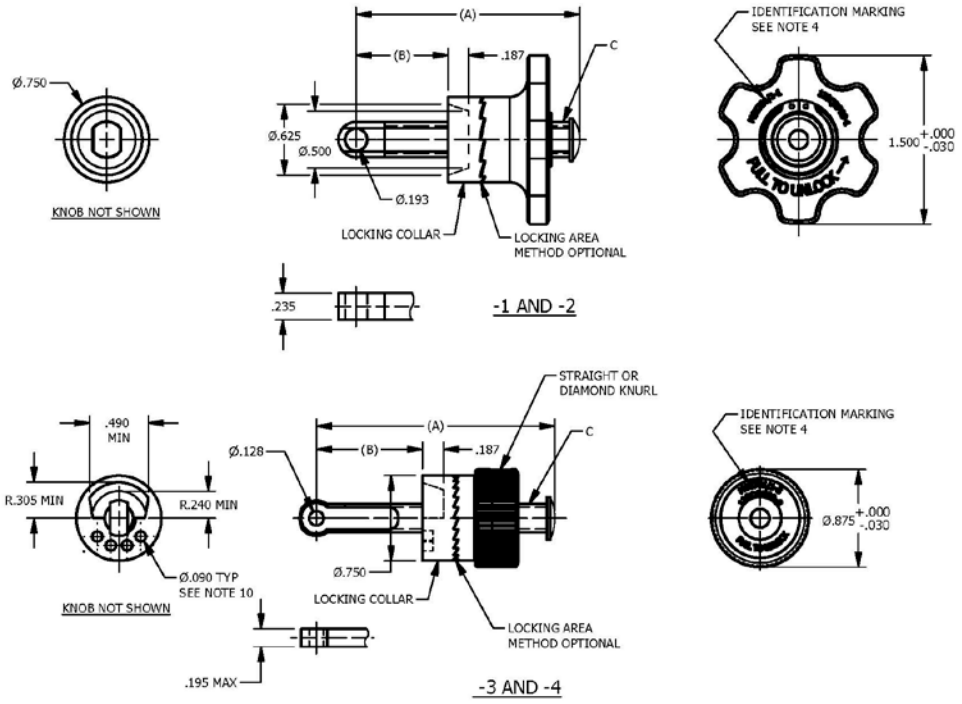

FIGURE 2. DASH NUMBERS 1 THROUGH 4
UNLOCK BY TURNING AND PULLING KNOB

FIGURE 2. Dash numbers -1 through -4.

TABLE I. Fasteners.

Dash no.	A (ref)	B (ref)	C threads	Load (lbs min)	Max wt (ounces)
-1	1.88	1.00	0.312-24	2,000	3
-2	2.75	1.88	0.312-24	2,000	3
-3	1.88	1.00	0.250-28	1,000	2.5
-4	2.75	1.88	0.250-28	1,000	2.5

Source: https://assist.dla.mil -- Downloaded: 2026-11-28T07:23Z
Check the source to verify that this is the current version before use.

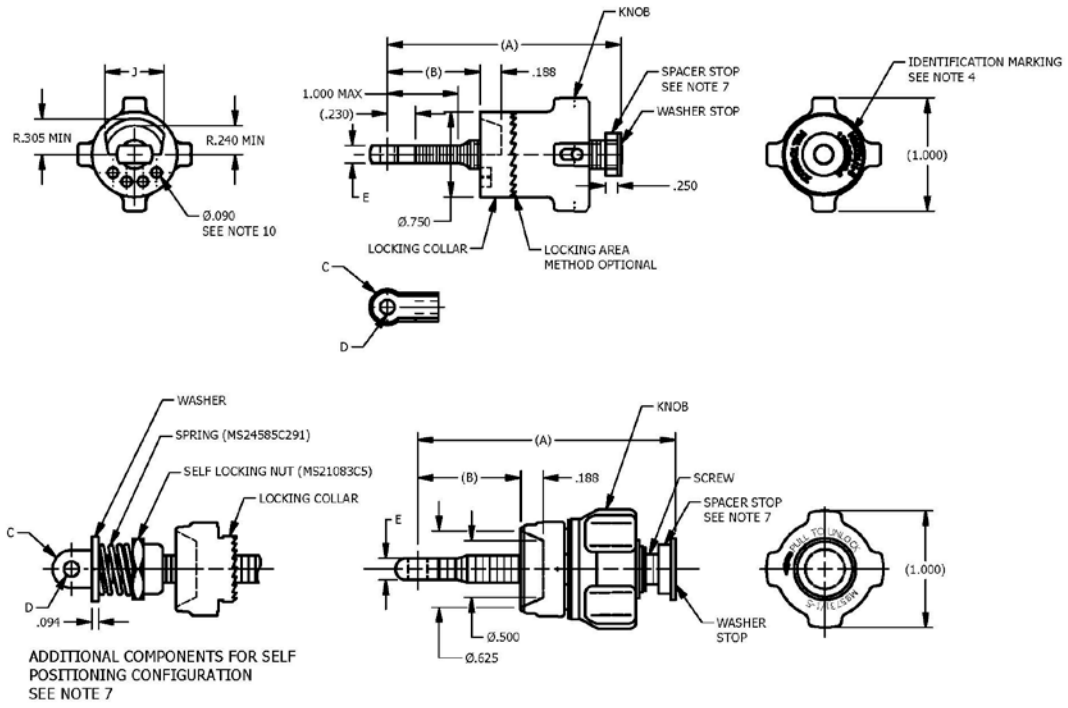

FIGURE 3. DASH NUMBERS -5 THROUGH 10
UNLOCK BY PULLING AND TURNING KNOB
OPTIONAL KNOBS AND LOCKING COLLARS SHOWN

FIGURE 3. Dash numbers 5 through 10.

TABLE II. Fasteners.

Dash no.	A	B (ref)	Threads (ref)	C Rad	D +.003 -.000	E	J Flat min	Load (lbs)
-5	2.03	1.000	0.250-28 1/	0.156	0.128	0.156	0.490	1,000
-6	2.41	1.375	0.250-28 1/	0.156	0.128	0.156	0.490	1,000
-7	2.91	1.875	0.250-28 1/	0.156	0.128	0.156	0.490	1,000
-8	2.03	1.000	0.312-24	0.190	0.160	0.183	0.490	2,000
-9	2.41	1.375	0.312-24	0.190	0.160	0.183	0.490	2,000
-10	2.91	1.875	0.312-24	0.190	0.160	0.183	0.490	2,000

1/ 0.312-24 threads shall be optional for -5, -6, and -7.

Source: https://assist.dla.mil -- Downloaded: 2026-11-28T07:23Z
Check the source to verify that this is the current version before use.

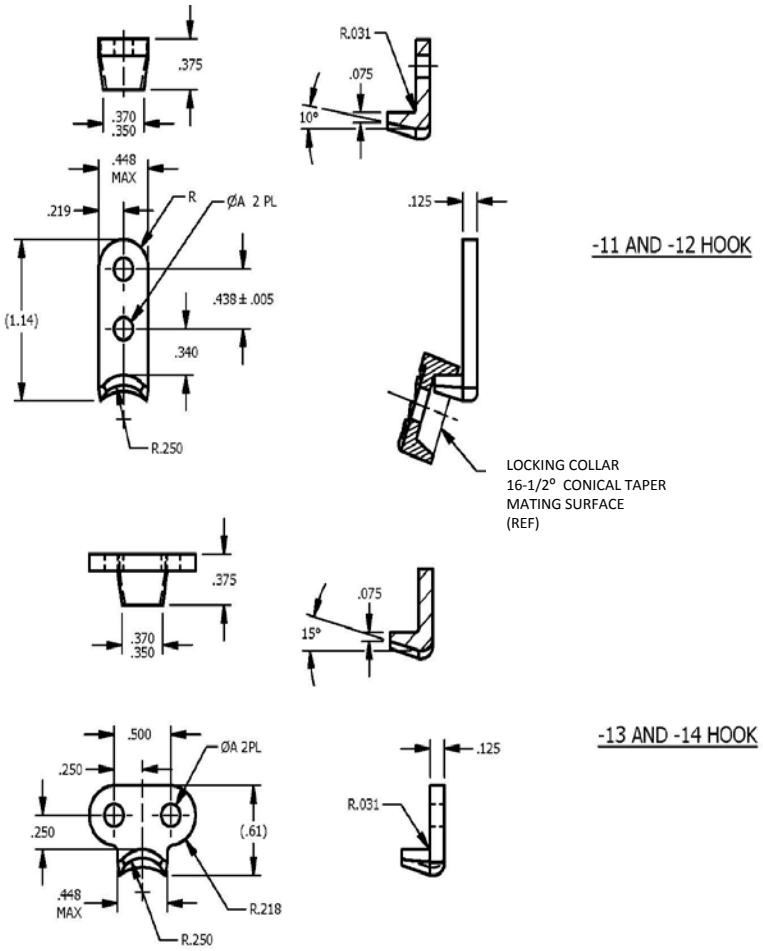

FIGURE 4. Dash numbers 11 through 14.

TABLE III. Hooks.

Dash no.		A	Load (lbs min)	Mating latch assy
Steel	CRES			
-11	-11C	0.167-0.172	1,000	-3, -4, -5, -6, -7
-12	-12C	0.193-0.198	2,000	-1, -2, -8, -9, -10
-13	-13C	0.167-0.172	1,000	-3, -4, -5, -6, -7
-14	-14C	0.193-0.198	2,000	-1, -2, -8, -9, -10

Source: https://assist.dla.mil -- Downloaded: 2026-11-28T07:23Z
Check the source to verify that this is the current version before use.

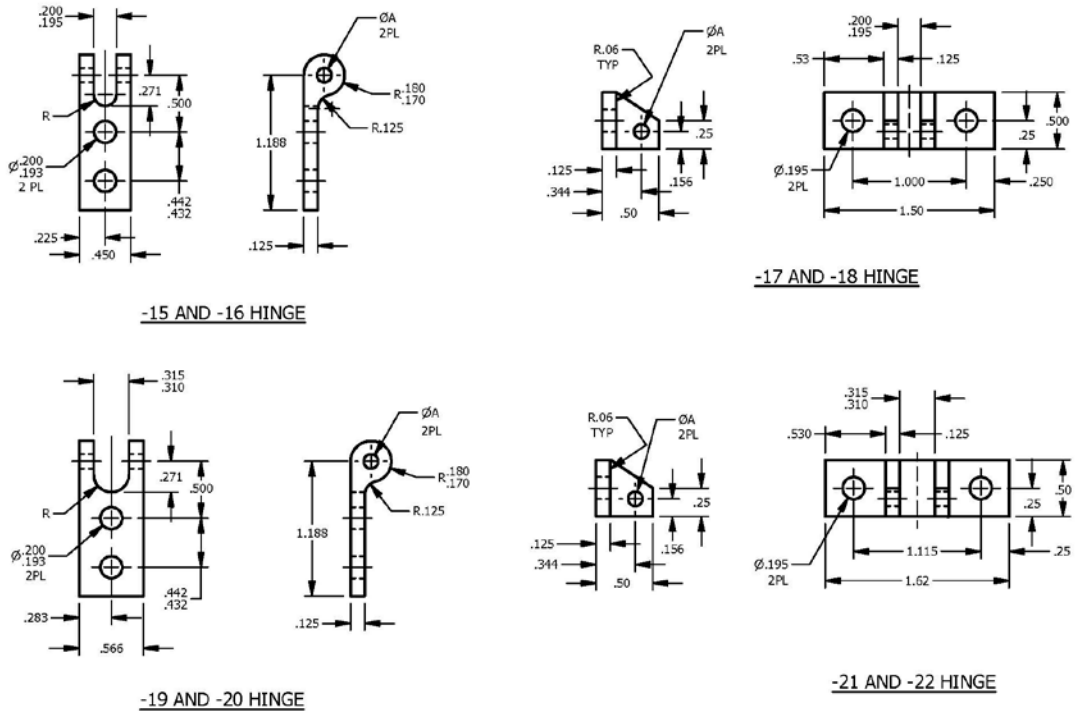

FIGURE 5. Dash numbers 15 through 22.

TABLE IV. Hinges.

Dash no.		A	Load (lbs min)	Mating latch assy
Steel	CRES			
-15	-15C	0.128-0.133	1,000	-3, -4, -5, -6, -7
-16	-16C	0.160-0.165	2,000	-8, -9, -10
-17	-17C	0.128-0.133	1,000	-3, -4, -5, -6, -7
-18	-18C	0.160-0.165	2,000	-8, -9, -10
-19	-19C	0.128-0.133	1,000	-3, -4, -5, -6, -7
-20	-20C	0.160-0.165	2,000	-1, -2, -8, -9, -10
-21	-21C	0.128-0.133	1,000	-3, -4, -5, -6, -7
-22	-22C	0.160-0.165	2,000	-1, -2, -8, -9, -10

Source: https://assist.dla.mil -- Downloaded: 2026-11-28T07:23Z
Check the source to verify that this is the current version before use.

Alloy Steel Components	Cadmium plate in accordance with SAE AMS-QQ-P-416, Type II, Class 2. Bake within 2 hours after plating for 23 hours at 375 ºF ±25 ºF.
Lubricant:	Dry film lubricant in accordance with the MIL-PRF-46010, Type I.

When special hooks are required to meet design requirements, the tip configuration shall be in accordance with MIL-DTL-85731/1-11.

NOTES:

1. Remove burrs, slivers and break sharp edges.

2. Dimensions are in inches.

3. Unless otherwise specified, tolerances: 2 place decimal ±03, 3 place decimal ±010.

4. Identification (MIL-DTL-85731/1) and other markings shall be permanent. Method of application is optional as long as the identification is not destroyed through normal use. Manufacturer's name and part number may appear elsewhere on the item supplied.

5. Suffix "A" Following dash number (-5 through -10) designates spacer stop feature.

   Suffix " " No suffix following dash number (-5 through -10) designates no spacer stop feature.

   Suffix "ACP" Following dash number (-5 through -10) designates self positioning and stop feature.

   Suffix "CP" Following dash number (-5 through -10) designates self positioning feature.

   Suffix "C" Following dash number (-11 through -22) designates corrosion resistant steel material.

6. Example of part number:

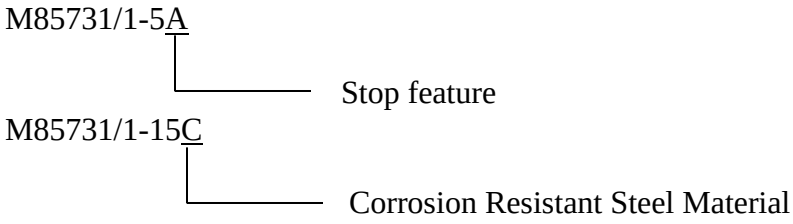

Source: https://assist.dla.mil -- Downloaded: 2026-11-28T07:23Z
Check the source to verify that this is the current version before use.

7. The self-positioning configuration of this fastener will allow the latch assembly to remain oriented in any desired position after equipment removal. This configuration should be utilized where the unattached latch assembly will hang in a position that would interfere with the installation or removal of other equipment. The spacer stop configuration reduces "B" dimension (at maximum open position) by 0.250 (see table II).

8. Referenced documents shall be the issue in effect on date of invitations for bids or request for proposal, except that referenced DoD adopted non-Government documents shall give the date of the issue adopted.

9. For design feature purposes, this specification sheet takes precedence over procurement documents referenced herein.

10. The 0.090 inch diameter surface holes do not affect the function of the part. The number of holes may vary from the designated four and six (see figures 2 and 3 respectively).

11. Alloy steel parts shall be magnetic particle inspected in accordance with ASTM E1444.

12. Corrosion resistant steel parts shall be liquid penetrant inspected in accordance with ASTM E1417. Sintered metal parts shall be exempt from this inspection.

13. Changes from previous issue. The margins of this specification sheet are marked with vertical lines to indicate where changes from the previous issue were made. This was done as a convenience only and the government assumes no liability whatsoever for an inaccuracies in these notations. Bidders and contractors are cautioned to evaluate the requirements of this document based on the entire content irrespective of the marginal notations and relationship to the previous issue.

Custodians:
Army – AV
Navy – AS
Air Force – 99
DLA – IS

Review activities:
Army – AR, CR, MI

Preparing activity:
Navy - AS
(Project 5340-2017-009)

NOTE: The activities listed above were interested in this document as of the date of this document. Since organizations and responsibilities can change, you should verify the currency of the information above using the ASSIST Online database at https://assist.dla.mil.

Source: https://assist.dla.mil -- Downloaded: 2026-11-28T07:23Z
Check the source to verify that this is the current version before use.