MILITARY SPECIFICATION

JACKETS, FLYER'S, INTERMEDIATE, TYPE G-1

This specification has been approved by the Naval Air Systems Command, Department of the Navy.

1. SCOPE

1.1 Scope - This specification covers the requirements for one type and seven sizes of an intermediate, flyer's jacket designated as Type G-1.

1.2 Classification - The Type G-1 intermediate, flyer's jackets shall be furnished in the following sizes, as specified (see 6.2 (b)).

SIZE 1/

36	40	44	48
38	42	46	

1/ Patterns, for these jacket sizes, are available (see 6.3).

2. APPLICABLE DOCUMENTS

2.1 The following documents of the issue in effect on date of invitation for bids or request for proposal, form a part of this specification to the extent specified herein:

SPECIFICATIONS

Federal

V-B-871	Button, Sewing Hole, and Button, Staple (Plastic)
V-F-106	Fasteners, Slide, Interlocking
V-T-280	Thread, Cotton Gimp, Buttonhole
V-T-295	Thread, Nylon

FSC 8415

Source: https://assist.dla.mil -- Downloaded: 2026-11-23T00:01Z
Check the source to verify that this is the current version before use.

SPECIFICATIONS

Federal (Continued)

JJ-W-155	Webbing, Textile (Cotton, Elastic)
KK-L-170	Leather, Kidskin, or Goatskin, Chrome Tanned
UU-P-268	Paper, Kraft, Untreated, Wrapping
CCC-C-438	Cloth, Buckram, Cotton
PPP-B-636	Box, Fiberboard
PPP-T-45	Tape, Gummed, Paper, Reinforced and Plain, For Sealing and Securing

Military

MIL-C-326	Cloth, Silesia, Cotton
MIL-C-508	Cloth, Oxford, Nylon, 3 Ounce
MIL-C-3735	Cuffs, Knit, Wrist and Ankle, and Cloth, Knitted
MIL-M-5631	Mouton (For Flight Clothing)
MIL-C-6590	Cloth, Pile (Synthetic Mouton, Knitted)
MIL-F-10884	Fasteners, Snap
MIL-L-15040	Labels, Garment (Woven, Rayon)
MIL-E-20652	Eyelets, Metallic, With Washers

STANDARDS

Federal

FED-STD-751	Stitches, Seams, and Stitching

Military

MIL-STD-105	Sampling Procedures and Tables for Inspection by Attributes

Source: https://assist.dla.mil -- Downloaded: 2026-11-23T00:01Z
Check the source to verify that this is the current version before use.

STANDARDS

Military (Continued)

MIL-STD-129	Marking for Shipment and Storage
MS27980	Fasteners, Snap, Style 2 (Regular Wire Spring Clamp Type)
MS63033	Eyelets, Metallic, Rolled Deep Flange, With Washer, Style A

(When requesting any of the applicable documents, refer to both title and number. All requests should be made via the cognizant Government quality assurance representative. Copies of this specification and other unclassified specifications and standards required by contractors in connection with specific procurement functions should be obtained upon application to the Commanding Officer, Naval Publications and Forms Center (Code 1051), 5801 Tabor Avenue, Philadelphia, Pennsylvania 19120. All other documents should be obtained from the procuring activity or as directed by the contracting officer.)

3. REQUIREMENTS

3.1 First article - Unless otherwise specified, the Type G-1 intermediate, flyer's jackets furnished under this specification shall be a product which has been inspected and has passed the first article inspection specified in 4.3 through 4.3.2.

3.2 Materials and components - The materials and components shall conform to the applicable specifications and standards as listed or required herein.

3.2.1 Leather -

3.2.1.1 Outershell - The outershell, of the jacket, shall be fabricated from the leather conforming to KK-L-170, Type I, Class 2, 2/64 to 3/64 inch thick. The leather shall be dyed brown and the color shall match the following Munsell Color Notation, Hue 10R to 5YR, Value 2 to 3, Chroma 0.2 to 2, when inspected as specified in 4.5.1.

3.2.1.2 Pockets, flaps, facings, belt, reinforcement, undercollar, and hanger - The pockets, flaps, facings, belt, reinforcement, undercollar, and hanger shall be fabricated from the outershell leather, 3.2.1.1.

Source: https://assist.dla.mil -- Downloaded: 2026-11-23T00:01Z
Check the source to verify that this is the current version before use.

3.2.2 Lining -

3.2.2.1 Jacket - The lining, for the jacket, shall be fabricated from the nylon oxford cloth conforming to MIL-C-508, Type I, Class 2. The color of the cloth shall match the color of the leather outershell, when inspected as specified in 4.5.1.

3.2.2.2 Pockets -

3.2.2.2.1 Outer - The outer pocket lining shall be fabricated from the silesia cloth conforming to MIL-C-326, Type I, color black.

3.2.2.2.2 Inner - The inner pocket shall be fabricated from the jacket lining cloth, 3.2.2.1.

3.2.2.3 Interlining - The collar and pocket flap interlining shall be fabricated from the buckram cloth conforming to CCC-C-438, Type II, Class 2, color optional.

3.2.2.4 Hanger reinforcement - The hanger reinforcement shall be fabricated from the interlining cloth, 3.2.2.3, and shall be located under the hanger, between the lining and leather outershell.

3.2.3 Mouton - The mouton, for the top portion of the collar, shall conform to MIL-M-5631, Type I, Class 1 or MIL-C-6590, Type II. The mouton shall be dyed brown and shall match the following Munsell Color Notation, Hue 10R to 5YR, Value 2 to 3, Chroma 0.2 to 2, when inspected as specified in 4.5.1. The mothproofing treatment of MIL-M-5631 is not applicable.

3.2.4 Knit wrist cuffs and waistband - The knit wrist cuffs and waistband shall conform to MIL-C-3735, Type I, Class 2, for the cuffs, and Class 3, for the waistband, except that the shrink resistant treatment is not applicable and that the width and length of the waistband shall conform to the patterns. The color of the knit wrist cuffs and waistband shall match the color of the leather outershell, 3.2.1.1, when inspected as specified in 4.5.1.

3.2.5 Thread - The sewing thread shall conform to V-T-295, Type I or II, Class 1 or 2, Size E, except that the jacket lining parts may be joined together with Size B. The thread shall have at least "good" colorfastness to dry cleaning, perspiration, and light. The color of the thread shall match the color of the leather outershell, 3.2.1.1, when inspected as specified in 4.5.1.

3.2.6 Gimp - The gimp thread, for reinforcing the buttonholes, shall conform to V-T-280, Type I or II, Size Number 8. The color of the gimp thread shall approximately match the color of the leather outershell, 3.2.1.1, when inspected as specified in 4.5.1. The gimp thread shall have at least "good" colorfastness to dry cleaning.

Source: https://assist.dla.mil -- Downloaded: 2026-11-23T00:01Z
Check the source to verify that this is the current version before use.

3.2.7 Buttons - The buttons shall conform to V-B-871, Type II, Class D, Style 20 or 21, Size 30 Line, Dull Finish. The color of the buttons shall approximately match the color of the leather outershell, 3.2.1.1, when inspected as specified in 4.5.1.

3.2.8 Elastic webbing - The elastic webbing shall conform to JJ-W-155, Type I, Class 3, 3/4 inch wide, natural color. The length of the elastic webbing shall conform to the patterns.

3.2.9 Slide fastener - The slide fastener shall conform to V-F-106 and Tables I and II. The chain endurance inspection of V-F-106 is applicable. The chain and all the other metal components shall be brass with a natural finish, except that the slider may be fabricated from a zinc alloy, brass plated. The slide fastener tapes shall be nylon, dyed to approximately match the color of the leather outershell, 3.2.1.1, when inspected as specified in 4.5.1, and shall have at least "good" colorfastness to laundering and wet dry cleaning. A thong, fabricated from the leather outershell, 5/16 ±1/16 inch wide, shall be looped through and securely knotted to the pull, approximately at the center of the thong length. The free finished length of the thong shall be 2-1/2 ±1/4 inches. The ends of the thong shall be cut on an angle of approximately 60 degrees. The slider shall close the slide fastener in the upward direction.

TABLE I

SLIDE FASTENER PROPERTIES

CHARACTERISTICS	REQUIREMENTS
Type	IV
Style	8
Size	MH
Type of pull	Wire stirrup, 1-1/4 inches long

TABLE II

SLIDE FASTENER LENGTHS

JACKET SIZE	SLIDE FASTENER LENGTH INCHES
36 and 38	21-1/4
40, 42, and 44	22
46 and 48	22-1/2

Source: https://assist.dla.mil -- Downloaded: 2026-11-23T00:01Z
Check the source to verify that this is the current version before use.

3.2.10 Snap fasteners - The snap fasteners shall conform to MIL-F-10884, Style 2, Finish 2 or 5, and MS27980-1B, -2B or -3B, -6B, -7B, and -8B.

3.2.11 Eyelets - The eyelets shall conform to MIL-E-20652, Style A, and MS63033-3-1563.

3.3 Design - The jacket shall consist essentially of a leather outershell, lined throughout the body and sleeves with the nylon cloth, and a top collar of mouton. The jacket shall conform in appearance to Figures 1 and 2.

3.4 Construction - The construction of the Type G-1 intermediate, flyer's jacket shall conform to Figures 1 through 11

3.4.1 Cutting - The leather and the lining shall be cut in strict accordance with the furnished patterns which show seam allowance, size, shape, and placement of all the pockets and notches for the assembling of all the parts. The knitted material, for the waistband, shall be cut so that the wales direction shall be in the nine inch dimension (see the patterns). The lining gussets may be cut from the ends.

3.4.2 Shade and size marking - Except for the lining gussets, cut from the ends (see 3.4.1), all the component parts of the leather outershell and the jacket lining shall be marked or ticketed to insure a uniform shade, grain pattern, and proper assembly throughout the jacket. The bundling method may be used for the leather skins provided, they conform to 3.4.2.1. No metal fastening device or sewn-on ticket shall be used. The shade and size markings shall be accomplished by the use of an ink pad numbering machine, rubber stamp, or pencil, provided the markings do not show through to the outerside of the jacket or the jacket lining and are not deleterious to the leather or the cloth. The markings, which are placed on the seam allowance, shall not be visible in the assembled garment. The adhesive type shade and size marking tickets may be used, for the shade and size markings provided, they conform to 3.4.2.2. The assembled jacket shall not contain any shade or size marking tickets.

3.4.2.1 Bundling method - The skins shall be segregated, into groups of the various shades, to assure a uniform shade and grain pattern throughout the outershell of the jacket The color of the skins shall conform to 3 2 1 1 Sufficient component parts shall be cut, from each group, for as many complete jacket outershells as possible. The component parts, of each individual group, shall be assembled into a bundle and the top ply of each individual component part shall be marked with the bundle number and size of the jacket. The manner of the marking shall comply with 3.4.2. The component parts, cut from various groups, shall not be joined together to construct a jacket outershell.

3.4.2.2 Adhesive shade and size marking tickets - The adhesive shade and size marking tickets shall be fabricated from paper with a thermo-activated

Source: https://assist.dla.mil -- Downloaded: 2026-11-23T00:01Z
Check the source to verify that this is the current version before use.

adhesive applied on one side. The adhesive shall not discolor or damage the cloth or leather and the adhesive mass shall not adhere to the cloth or leather, upon removal of the ticket. The heat used to attach the thermo-activated adhesive tickets shall not stiffen, harden, scorch, or damage the leather or cloth, as applicable, in any manner.

3.4.3 Seams and stitching - All the seams used in the fabrication of the jacket shall conform to Figures 1 through 11 and unless otherwise specified, shall be accomplished with Stitch Type 301. All the sections of the lining, when sewn to each other, shall be joined together with overedge stitching, Stitch Type 602, 1/4 inch wide overcasting the edge, and Stitch Type 401, 1/2 inch from the edge, forming a seam similar to Seam Type SSa-2. The Stitch Types 602 and 401 may be accomplished simultaneously or individually. The Stitch Type 401 looper thread shall not be visible in the assembled jacket. As an alternate, overedge Stitch Type 504, 505, or 506 may be substituted for Stitch Type 602 and Stitch Type 301 may be substituted for Stitch Type 401. The cut edges, of the lining sections, that are not sewn to each other, shall be overedged stitched, individually, with Stitch Type 504, 505, or 506. In the formation of the armhole, shoulder, sleeve outseams, and side seams, of the jacket outershell, the top (outer) ply shall be turned back and stitched down (top stitched) with Stitch Type 301 or 401, 1/4 inch from the turned edge, forming Seam Type LSq-2. There shall be 8 to 10 stitches per inch for all the types of stitching. The types of the stitching and seams shall conform to FED-STD-751. Except for the collar closing tab, hanger, and the top edge of the pocket flaps, which are turned under, no cut or raw edges shall be visible. All the seam edges shall be properly forced out and shall not contain any folds. No seam or component shall be twisted, puckered, or pleated and no part of the jacket shall be caught in an unrelated operation or seam. The construction of the jacket shall not interfere with the movement of the slider.

3.4.3.1 Sewing - Each row of stitching shall be straight and parallel to the seam edge. The straightness of the stitching, in any row, shall be maintained within a tolerance of plus or minus 1/32 inch. The same tolerance for spacing and parallelism shall be applicable for the double rows of stitches. All the double rows of stitching shall be 3/16 to 1/4 inch apart. The ends of all the Stitch Type 301 stitching, that are not caught in other seams or stitching, shall be securely back-stitched, by overlapping on themselves, for at least 1/2 inch. The thread breaks, skips, and run-offs shall be overstitched not less than one inch. The thread tension shall be maintained so that there shall not be any loose or tight stitching and the lock shall be embedded in the materials sewn together. All the thread ends shall be trimmed.

3.4.3.2 Attaching of the buttons - The pocket buttons shall be sewn through the pocket patch and lining. The buttons, for the collar, shall be sewn through the undercollar and interlining only. The buttons shall be attached either by hand or machine sewing

Source: https://assist.dla.mil -- Downloaded: 2026-11-23T00:01Z
Check the source to verify that this is the current version before use.

3.4.3.2.1 Hand sewing - The buttons shall be attached, by hand sewing, with a minimum of four double strands, of the thread, through each sewing hole. The thread shall then be wound around the attaching threads, a minimum of four times, to form a hand wrapped shank 1/8 to 3/16 inch long. The threads shall be passed through the shank, at least four times, to secure the loose ends.

3.4.3.2.2 Machine sewing - The buttons shall be attached, by machine sewing, with Stitch Type 101, 20 to 24 stitches per button, or with Stitch Type 301, 14 to 16 stitches per button. Each machine sewn button shall have a securely machine wrapped shank, 1/8 to 3/16 inch long.

3.4.3.3 Buttonholes - All the buttonholes shall be clean cut and uniform in appearance. The buttonholes shall be of the eyelet end taper-bar type and worked over the gimp. The leather shall be securely caught in the stitching and the ends of the buttonholes shall be tacked. The purling and the gimp shall be on the outer-side of the jacket. Each buttonhole shall contain a minimum of 46 stitches, including the tacking. Each buttonhole shall have a cut opening of 3/4 to 7/8 inch. The center of each button, shall be properly aligned with the eyelet of the corresponding pocket flap or the collar closing tab buttonhole, as applicable.

3.4.3.3.1 Pocket flap - Each pocket flap shall have a centered vertical buttonhole 5/8 ±1/8 inch from the bottom edge.

3.4.3.3.2 Collar closing tab - The collar closing tab shall have a buttonhole 3/4 ±1/8 inch from the furthest point of the outer free edge. The location and angle of the buttonhole shall be as indicated by the patterns. The tab shall be turned back and held in position by a button.

3.5 Dimensions - The jackets shall be full cut and after assembly shall conform to the dimensions, for the different sizes, specified in Table III, when measured as specified in 4.5.3 through 4.5.3.4. The variation in length between the left and right sleeve inseams shall not exceed 1/2 inch in any jacket.

TABLE III

JACKET DIMENSIONS

LOCATION	BREAST	WAIST	BACK LENGTH	SLEEVE INSEAM LENGTH
TOLERANCE	INCHES ±1/2	INCHES ±1/2	INCHES +1, -1/2	INCHES +1, -1/4
SIZE				
36	20-1/2	18-1/2	21-1/4	15-3/4
38	21-1/2	19-1/2	21-3/4	15-3/4
40	22-1/2	20-1/2	22-1/4	16-3/4

Source: https://assist.dla.mil -- Downloaded: 2026-11-23T00:01Z
Check the source to verify that this is the current version before use.

TABLE III (Continued)

LOCATION	BREAST	WAIST	BACK LENGTH	SLEEVE INSEAM LENGTH
TOLERANCE	INCHES ±1/2	INCHES ±1/2	INCHES +1, -1/2	INCHES +1, -1/4
42	23-1/2	21-1/2	22-1/2	16-3/4
44	24-1/2	22-1/2	22-3/4	17-3/4
46	25-1/2	23-1/2	22-7/8	17-3/4
48	26-1/2	24-1/2	23	18-3/4

3.6 Property markings - The flap, which extends down the front of the jacket beneath the slide fastener, shall be perforated with the letters "USN". The letters shall be placed in the center, of the width, of the flap, and in the direction of the long axis of the flap. The perforations shall be in the upper portion, of the flap, above the horizontal seam. The letters shall be 1 inch high and 1 inch wide and shall be evenly spaced so that the total width is approximately 4 inches The letters "USN" shall be perforated through both thicknesses of the leather in the flap and so spaced that these perforations shall not propagate a tear in the leather, pull out, or cut any portion of any seam in the facing.

3.7 Label - The identification label shall be centered, within 1/2 inch, and sewn on all the four sides to only the lining, just below the hanger. The label shall conform to MIL-L-15040, Size A. The label shall contain the following information:

JACKET, FLYER'S, INTERMEDIATE, TYPE G-1
SIZE
MIL-J-7823E(AS)
CONTRACT OR ORDER NUMBER
NAME OF MANUFACTURER
DATE OF MANUFACTURE (Month and Year)
FSN

3.8 Workmanship - After completion of the final assembly, the jackets shall be thoroughly cleaned and all loose thread, lint, and foreign matter shall be completely removed. The snap fasteners and the metal eyelets and washers shall be securely clinched without distortion, cracking, splitting, or cutting of the leather. The snap fastener stud and socket shall be properly aligned so that, when snapped together shall not cause a noticeable bulge or twist to the inner pocket. The jackets shall not contain any non-specified hole, tear, cut, burn, needle chew, spot, stain, or weakening defect. The metal components shall not be misaligned or distorted nor contain any corrosion, scale, pit, dent, nick, burr, sliver, crack, or sharp edge.

Source: https://assist.dla.mil -- Downloaded: 2026-11-23T00:01Z
Check the source to verify that this is the current version before use.

The jackets shall be uniform in quality and shall be free from irregularities or defects which could adversely affect performance, reliability, or durability. The jackets shall conform to the quality and grade of product established by this specification. The occurrence of defects shall not exceed the acceptance criteria established herein.

4. QUALITY ASSURANCE PROVISIONS

4.1 Responsibility for inspection - Unless otherwise specified in the contract or purchase order, the supplier is responsible for the performance of all inspection requirements as specified herein. Except as otherwise specified in the contract or order, the supplier may use his own or any other facilities suitable for the performance of the inspection requirements specified herein, unless disapproved by the Government. The Government reserves the right to perform any of the inspections set forth in the specification where such inspections are deemed necessary to assure supplies and services conform to prescribed requirements.

4.2 Classification of inspection - The examination and testing of the Type G-1 intermediate, flyer's jackets shall be classified as follows

(a) First article inspection - First article inspection consists of examinations and tests performed on samples which are representative of the production item after award of a contract to determine that the production item conforms to the requirements of this specification (see 3.1 and 4.3 through 4.3.2).

(b) Quality conformance inspection - Quality conformance inspection consists of examinations and tests performed on individual products or lots to determine conformance of the products or lots with the requirements set forth in this specification (see 4.4 through 4.4.1.2).

4.3 First article inspection - The first article inspection of the Type G-1 intermediate, flyer's jackets shall consist of examinations and tests for all of the requirements of this specification.

4.3.1 First article samples - Unless otherwise specified, as soon as practicable after the award of the contract or order, the manufacturer shall submit two jackets of any size specified in the contract or order. The samples shall be representative of the construction, workmanship, components, and materials to be used during production. When a contractor is in continuous production of these jackets from contract to contract, submission of further first article inspection samples, on the new contract, may be waived at the discretion of the procuring activity (see 6.2(c)). Approval of the first article inspection samples or the waiving

Source: https://assist.dla.mil -- Downloaded: 2026-11-23T00:01Z
Check the source to verify that this is the current version before use.

of the first article inspection does not preclude the requirements for performing the quality conformance inspection. The first article inspection samples shall be furnished to the Government as directed by the contracting officer (see 6.2 (d)).

4.3.2 Upon completion of the first article inspection, all the applicable inspection reports and when applicable, recommendations and comments pertinent for use in monitoring production will be forwarded to the cognizant Government activity. One of the approved first article inspection sample jackets will be returned to the manufacturer for use in monitoring production. The other jacket will be destroyed in the first article inspection and shall not be considered as part of the quantity to be delivered under the contract or order.

4.4 Quality conformance inspection - The sampling and inspection levels shall conform to MIL-STD-105. The quality conformance inspection shall consist of the following:

Visual examination of the jackets
Dimensional check of the jackets
Preparation for delivery

4.4.1 Sampling -

4.4.1.1 Inspection lot -

4.4.1.1.1 Jackets - An inspection lot size shall be expressed in units of one jacket made essentially under the same conditions and from the same materials and components. The sample unit shall be one jacket.

4.4.1.1.2 Preparation for delivery - An inspection lot size shall be expressed in units of one fully prepared shipping container, containing jackets of one size, fully prepared for delivery from essentially the same materials and components. The sample unit shall be one shipping container, containing jackets of one size, fully prepared for delivery with the exception that it need not be sealed.

4.4.1.2 Sampling for examinations and tests of the jackets and preparation for delivery - The sample size, acceptance criteria, examinations, and tests for the jackets or the preparation for delivery shall be as specified in Table IV.

4.5 Inspection methods -

4.5.1 Color matching - The color of the leather outershell, jacket lining cloth, mouton, knit wrist cuffs and waistband, thread, gimp, buttons, and slide fastener tapes shall be compared to the approved standard shade under natural (north sky) daylight or artificial daylight having a color temperature of 7500 degrees Kelvin.

Source: https://assist.dla.mil -- Downloaded: 2026-11-23T00:01Z
Check the source to verify that this is the current version before use.

TABLE IV

SAMPLE SIZE, ACCEPTANCE CRITERIA, EXAMINATIONS, AND TESTS OF THE JACKETS AND PREPARATION FOR DELIVERY

INSPECTION	PARAGRAPH		SAMPLE SIZE	ACCEPTANCE CRITERIA
	REQUIREMENT	METHOD		
Visual examination	3.3 through 3.4.3.3.2, 3.6 through 3.8, and Figures 1 through 11, as applicable	4.5.2.1 and Table V	Inspection Level II	An acceptable quality level of 2.5 defects per 100 units for major defects, 15.0 defects per 100 units for major plus minor A defects, and 25.0 defects per 100 units for total (major plus minor A and minor B) defects
Dimensional check	3.5 and Table III	4.5.2.1, Table VI, and 4.5 3 through 4.5.3.4	Inspection Level S-3	An acceptable quality level of 4.0 defects per 100 units
Preparation for delivery	Section 5	4.5.2.2	Inspection Level S-2	An acceptable quality level of 2.5 defects per 100 units

4.5.2 Visual examination -

4.5.2.1 Jackets - Each of the jackets, selected as a sample unit from the lot, shall be thoroughly checked dimensionally and examined visually to determine conformance to this specification. The classification and list of defects, Tables V and VI, as applicable, shall be used to classify and enumerate the defects found.

Source: https://assist.dla.mil -- Downloaded: 2026-11-23T00:01Z
Check the source to verify that this is the current version before use.

TABLE V

CLASSIFICATION OF DEFECTS FOR THE VISUAL EXAMINATION OF THE JACKETS

DEFECT	MAJOR	MINOR	
		A	B
MATERIAL DEFECTS AND WORKMANSHIP DAMAGES			
GENERAL			
a. Any non-specified hole, scissors or knife cut, tear, mend, burn, or weakening defect, such as a smash, multiple float, loose slub, needle chew, or abraded area	1/		
b. Any portion of the cloth or leather stiffened, hardened, or scorched by any process of manufacturing	X		
c. Any lining, facing, or interlining pleated, short, tight, or twisted causing puckers or twist on any part of the jacket		X	
d. Any pocket, flap, or collar closing tab bulging, twisted, or distorted, when buttoned		X	
e. Any elastic webbing strip causing puckers or twist on the outerside of the jacket		X	
METALLIC COMPONENTS			
a. Any surface rough, misaligned, distorted or contains any nick, sliver, burr, sharp edge, scale, pit, dent, or crack	X		
b. Any loose, detached, or otherwise not securely retained		X	
c. Any metallic surface unclean or contains embedded foreign matter			X
d. Any malformed, corroded, fractured, broken, chipped, or bent	X		
e. Slide fastener 2/:			
1. Not specified type, size, pull, or style; movement of the slider interfered with or scoops of the chain do not mesh or interlock	X		

Source: https://assist.dla.mil -- Downloaded: 2026-11-23T00:01Z
Check the source to verify that this is the current version before use.

TABLE V (Continued)

DEFECT	MAJOR	MINOR A	MINOR B
METALLIC COMPONENTS (Continued)			
2. Any portion of the jacket or slide fastener tape puckered, twisted, or pleated at the slide fastener tape joining seam, when the slide fastener is open or closed		X	
3. Slider does not close the slide fastener upwards	X		
4. Thong omitted, assembled length less than 2-1/4 inches or more than 2-3/4 inches			X
5. Thong not securely knotted to the pull 3/			X
6. Retainer portion is less than 1/2 inch or more than 3/4 inch from the bottom of the jacket (see Figure 11)		X	
f. Snap fastener or eyelet and washer:			
1. Any snap fastener mismated or any portion of the snap fastener assembly missing		X	
2. Any improperly clinched resulting in cutting of the leather	X		
3. Snap fastener stud not aligned with the socket causing a noticeable bulge or twist to the inner pocket, when snapped together 4/		X	
4. Snap fastener:			
(a) Off center by:			
(1) 1/2 inch or less			X
(2) More than 1/2 inch		X	
5. Any eyelet and washer or the snap fastener not black chemically finished, finish missing, or not uniformly finished		X	

Source: https://assist.dla.mil -- Downloaded: 2026-11-23T00:01Z
Check the source to verify that this is the current version before use.

TABLE V (Continued)

DEFECT	MAJOR	MINOR	
		A	B
METALLIC COMPONENTS (Continued)			
6. One eyelet missing			X
7. Two or more eyelets missing		X	
LEATHER			
a. Not full grain, soft, or flexible	1/		
b. Fat wrinkles, loose, spongy, boardy, or flanky leather	1/		
c. Any broken or grain cut, slaughter cut, cockle, open scar or scratch, brittle or bony area, or thin spot	X		
d. Any healed scar or brand, open tick mark or fly bite, or excessive large hair cells	1/		
e. Flesh side not smooth or free from coarse loose fiber or surface contains unremoved hair		X	
MOUTON			
a. Not dressed correctly (coarse, hard, or brittle)	1/		
b. Any portion rotted, stiff or boardy, bare spot, or lack of flexibility	X		
c. Any matted or knotted hair or pile		5/	
KNITTED WRIST CUFFS AND WAISTBAND			
a. Any run, dropped stitch, snag, pull, or slubby yarn	1/		
b. Lacking elasticity, too tight or loose		X	
c. Wales in any cuff or waistband not in the vertical direction (see Figure 1)	X		

Source: https://assist.dla.mil -- Downloaded: 2026-11-23T00:01Z
Check the source to verify that this is the current version before use.

TABLE V (Continued)

DEFECT	MAJOR	MINOR	
		A	B
SHADED PARTS			
a. Any part shaded or any shade bar		X	
b. Color of any component not as specified or not uniform		X	
CLEANNESS			
a. Any unsightly slub, adhesive shade or size marking ticket adhesive mass, spot, or stain on the outerside of the jacket		X	
b. Two or more thread ends not trimmed or two or more loose thread scraps not removed			X
c. Any shade or size marking ticket not removed or any shade or size identification marking stamping visible on the assembled jacket			X
d. Any metal fastening device or sewn on shade or size marking ticket	X		
e. Any portion of the assembled jacket discolored, where the adhesive shade or size marking ticket was attached		X	
COMPONENTS AND ASSEMBLY			
a. Any component not as specified or any defect of a component or defect of assembly, not herein classified	1/		
b. Any component, component part, or required operation omitted, or any operation improperly performed, not herein classified	1/		
c. Any component part not cut in accordance with the patterns, not herein classified	1/		

Source: https://assist.dla.mil -- Downloaded: 2026-11-23T00:01Z
Check the source to verify that this is the current version before use.

TABLE V (Continued)

DEFECT	MAJOR	MINOR	
		A	B
SEAMS AND STITCHING			
a. Accuracy of Seaming:			
1. Any seam, hem, or attachment of any component twisted, puckered, pleated; any part of the jacket or component caught in an unrelated operation or stitching, any seam edge not properly forced out or contains any fold		X	
2. Ends of stitching that are not caught in other seams or stitching:			
(a) Any not securely backstitched	X		
(b) Any secure but backstitched for a distance less than 1/2 inch or the backstitching is not overlapped on itself			X
3. Thread breaks:			
(a) Any not securely overstitched	X		
(b) Any secure but overstitched for a distance less than one inch		X	
b. Gage of stitching 6/:			
1. Any stitching irregular, unevenly gaged, or various stitchings not uniform		X	
c. Open seams 7/:			
1. Outerside of the jacket:			
(a) Any 1/4 inch or less			X
(b) Any more than 1/4 inch but not more than one inch		X	
(c) Any more than one inch	X		

Source: https://assist.dla.mil -- Downloaded: 2026-11-23T00:01Z
Check the source to verify that this is the current version before use.

TABLE V (Continued)

DEFECT	MAJOR	MINOR	
		A	B
SEAMS AND STITCHING (Continued)			
2. Innerside of the jacket:			
(a) Any 1/2 inch or less			X
(b) Any more than 1/2 inch		X	
d. Raw edges 8/:			
1. Outerside of the jacket:			
(a) Any more than 1/8 inch but not more than 1/4 inch			X
(b) Any more than 1/4 inch but not more than one inch		X	
(c) Any more than one inch	X		
2. Innerside of the jacket			
(a) Any more than 1/4 inch but not more than one inch			X
(b) Any more than one inch		X	
e. Run-offs, skipped, or broken stitches			
1. Joining seams - when resulting in an open seam use "Open Seam" classification			
2. Top stitching, when not resulting in an open seam:			
(a) Outerside of the jacket			
(1) Any 1/2 inch or less			X
(2) Any more than 1/2 inch		X	

Source: https://assist.dla.mil -- Downloaded: 2026-11-23T00:01Z
Check the source to verify that this is the current version before use.

TABLE V (Continued)

DEFECT	MAJOR	MINOR A	MINOR B
SEAMS AND STITCHING (Continued)			
(b) Innerside of the jacket:			
(1) Any one inch or less			X
(2) Any more than one inch		X	
f. Seam and stitch type:			
1. Not specified seam or stitch	1/		
2. Any looper thread visible on the assembled jacket, when Stitch Type 401 is used		X	
g. Stitch tension 9/			
1. Any loose stitching or tight stitching, resulting in breaking of the stitches, when normal pull is applied	X		
h. Stitches per inch 10/			
1. Stitches more or less than specified:			
(a) Jacket (excluding label):			
(1) One or 2			X
(2) Three		X	
(3) More than 3	X		
(b) Label:			
(1) One to 3			X
(2) More than 3		X	

Source: https://assist.dla.mil -- Downloaded: 2026-11-23T00:01Z
Check the source to verify that this is the current version before use.

TABLE V (Continued)

DEFECT	MAJOR	MINOR A	MINOR B
SEAMS AND STITCHING (Continued)			
1. Buttonholes:			
1. Any omitted, not specified type, size, uncut, purling on the underside, or not securely caught in the jacket, stitching pulling away	X		
2. Skipped or broken stitches:			
(a) In one buttonhole			X
(b) In two buttonholes		X	
3. Stitches less than specified:			
(a) One to three			X
(b) Four to seven		X	
(c) More than seven	X		
4. Any end not securely tacked:			
(a) In one buttonhole			X
(b) In two buttonholes		X	
5. Gimp omitted in one or more buttonholes or on the underside		X	
3. Buttons			
1. Any missing, loose, malformed, fractured, or broken	X		
2. Not specified size or style	1/		
3. Stitches more or less than specified:			
(1) One			X

Source: https://assist.dla.mil -- Downloaded: 2026-11-23T00:01Z
Check the source to verify that this is the current version before use.

TABLE V (Continued)

DEFECT	MAJOR	MINOR A	MINOR B
SEAMS AND STITCHING (Continued)			
(b) Two		X	
(c) Three or more	X		
4. Shank missing on one or more buttons			X
5. Any surface rough, misaligned, distorted or contains any nick, burr, sharp edge, or crack	X		
DETAILED DEFECTS APPLICABLE TO SPECIFIC PARTS OF THE JACKET			
COLLAR			
a. Top collar or undercollar twisted, any collar edge curled or any collar end not securely tacked to the jacket		X	
b. Any edge crooked, undercollar edge exposed, or any corner not uniform in shape		X	
c. Off center:			
1. 1/2 inch or less			X
2. More than 1/2 inch		X	
d. Rounded corners uneven in length:			
1. 3/8 inch or less			X
2. More than 3/8 inch		X	
e. Star stitching points are less than 1-1/2 inches or more than 2-1/2 inches apart			X
f. Center of the collar closing tab buttonhole eyelet less than 5/8 inch or more than 7/8 inch from the point of the outer free edge			X

Source: https://assist.dla.mil -- Downloaded: 2026-11-23T00:01Z
Check the source to verify that this is the current version before use.

TABLE V (Continued)

DEFECT	MAJOR	MINOR A	MINOR B
FRONT OPENING			
a. Fronts uneven in length at the neck or at the bottom, when the slide fastener is closed:			
1. 1/4 inch or less			X
2. More than 1/4 inch		X	
b. Edges of the opening overlapped more than 1/8 inch or open more than 1/8 inch, when the slide fastener is closed		X	
c. Any facing short, tight, or twisted causing puckers or twist on the outerside of the fronts		X	
d. Flap not on right side		X	
POCKETS AND FLAPS			
a. Any pocket out of horizontal or vertical alignment by:			
1. 3/8 inch or less			X
2. More than 3/8 inch but not more than 1/2 inch		X	
3. More than 1/2 inch	X		
b Lower side edges of the pockets not mitered		X	
c. Any portion of the jacket, pocket, or flap puckered or pleated at the pocket or flap joining seam or at the pencil compartment	1/		
d. Pocket flap side edges are not even with the side edges of the pockets by more than 1/4 inch or corners of the pockets and flaps not securely tacked		X	
e. Flap buttonhole:			
1. Center of the eyelet less than 1/2 inch or more than 3/4 inch from the edge of the flap			X

Source: https://assist.dla.mil -- Downloaded: 2026-11-23T00:01Z
Check the source to verify that this is the current version before use.

TABLE V (Continued)

DEFECT	MAJOR	MINOR	
		A	B
POCKETS AND FLAPS (Continued)			
2. More than 1/4 inch off center of the flap		X	
JACKET AND LINING BELLOWS			
a. Any noticeable bulge in any outer folded edge or the back does not lie smoothly		X	
b. Top end of any outer folded edge, at the shoulder, unequal distance by more than 1/4 inch for the jacket and 1/2 inch for the lining from any armhole seam		X	
c. Lower end of any outer folded edge unequal distance by more than 1/4 inch for the jacket and 1/2 inch for the lining from any side seam		X	
SLEEVES			
a. Right sleeve in the left armhole or left sleeve in the right armhole or any sleeve, in its proper armhole, installed in a reverse position	X		
b. Any pleated at any armhole or any tight at any armhole seam causing puckers on any front or back		X	
c. Any sleeve lapped on the top of any front or the back at any armhole or undersleeve overlapping any top sleeve at any backarm seam		X	
LABEL AND PROPERTY MARKINGS			
a. Identification label:			
1. Size missing, incorrect, or illegible	X		
2. Other than size information incomplete, incorrect, or illegible		X	
3. Misplaced, off center of the back by more than 1/2 inch, stitching omitted on one or more edges or appear on the exterior of the jacket		X	

Source: https://assist.dla.mil -- Downloaded: 2026-11-23T00:01Z
Check the source to verify that this is the current version before use.

TABLE V (Continued)

DEFECT	MAJOR	MINOR	
		A	B
LABEL AND PROPERTY MARKINGS (Continued)			
b. Property markings:			
1. Missing, incorrect, incomplete, or illegible		X	
2. Letters less than one inch in height or width			X
3. Perforation so closely spaced as to result in a tear in the leather or perforations cut any flap seam		X	
4. Letters are off center by more than 1/2 inch		X	
HANGER			
a. Ends not securely attached or not attached as specified		X	
b. Less than 3-7/8 inches or more than 4-1/8 inches long or width less than 5/16 inch or more than 7/16 inch			X
c. Not stitched together along each edge or insecurely formed		X	
d. Located more than 1-1/8 inches or less than 7/8 inch below the collar seam		X	
e. Misplaced, off center of the back by more than 1/2 inch		X	

1/ The defect shall be classified major, when it seriously affects the serviceability or appearance, otherwise it is to be classified as a minor A defect.

2/ The slide fastener shall be checked for proper function, by opening and closing the slide fastener, at least three times, along its full length.

3/ With the slide fastener fully open, one end of the thong shall be grasped, by one hand, and normal hand force shall be applied, causing the slider to move, closing the slide fastener along its entire length.

4/ The snap fastener shall be checked for proper function and attachment by snapping closed and unsnapping the snap fastener at least three times.

Source: https://assist.dla.mil -- Downloaded: 2026-11-23T00:01Z
Check the source to verify that this is the current version before use.

5/ The defect shall be classified minor A, when it seriously affects the serviceability or appearance, otherwise it is to be classified as a minor B defect.

6/ The gage of stitching defect shall be classified only, when the condition exists for more than 2 inches on any row of stitching.

7/ A seam shall be classified as open, when one or more stitches, joining a seam, are broken or when two or more continuous skipped stitches or run-offs occur. On double stitched seams, a seam shall be classified as open, when either one or both sides of the seam contain any of the aforementioned for a single stitched seam.

8/ Any edge that should be turned under and is not, but is securely caught in the stitching, shall be classified as a raw edge. Any raw edge, that is not securely caught in the stitching, shall be classified as an open seam.

9/ Puckering is evidence of tight tension or gathering of the material. When puckering is evident, and is not caused by the gathering of the material, the stitching shall be inspected, by exerting normal pull in the lengthwise direction of the stitching, by pulling taut, to straighten out the seam. The gathering of the material shall be classified as an accuracy of seaming defect.

10/ The stitches per inch defect shall be classified only, when the condition exists for more than 3 inches on any row of stitching.

TABLE VI

LIST OF DEFECTS FOR THE DIMENSIONS OF THE ASSEMBLED JACKET

ASSEMBLED MEASUREMENTS	DEFECT
Breast Waist Back length Sleeve inseam length	Any measurement deviating from the measurements specified in 3.5 and Table III, and applicable tolerances, shall be enumerated as a dimensional defect.
Equal Length	
Sleeve	The variation in length between the left and right sleeve inseams shall be enumerated as a dimensional defect, when it exceeds 1/2 inch.

4.5.2.2 Preparation for delivery - Each of the fully prepared shipping containers, containing jackets of one size, selected as a sample unit from the lot, shall be visually examined to determine that the packaging, packing, and marking conform to this specification. The list of defects, Table VII, shall be used to enumerate the defects found.

Source: https://assist.dla.mil -- Downloaded: 2026-11-23T00:01Z
Check the source to verify that this is the current version before use.

TABLE VII

LIST OF DEFECTS FOR PREPARATION FOR DELIVERY

ITEM	DEFECT
Exterior and Interior Markings	Missing, incorrect, incomplete, illegible; of improper size, location, sequence, or method of application, size shown on the jackets, exterior containers, or on the paper label not the same, information on the paper label in the polyethylene bag not readable through the film or no paper label in the film bag.
Materials	Any nonconforming component; any component missing, damaged, or otherwise defective.
Workmanship	Inadequate application of the components, such as incomplete closure of the polyethylene bag or the container flaps, or loose strapping, bulging or distortion of any container, shipping container contains any metal fastening or stitches, polyethylene bag damaged, any vent hole missing, or any open or non-continuous heat sealed seam.
Exterior and Interior Weight or Content	Gross or net weight exceeds the requirement, number per container, as applicable, more or less than specified, more than one size jacket in the same container; any jacket not folded as specified, deformed, distorted, or bent, any portion of the jacket caught in any heat seal seam, not individually packaged within the polyethylene bag.

4.5.3 Procedure for measuring - The slide fastener, of each jacket to be measured, shall be fully closed. The pocket flaps shall be buttoned, the snap fastener shall be snapped closed, and the collar closing tab shall be folded back and buttoned. The jacket shall be laid flat, without tension, on a smooth, flat surface so that any creases and wrinkles shall not affect the measurement. The bellows shall be flat and in the closed position. The jacket shall be measured as follows:

4.5.3.1 Breast - Measure across the chest area, from side fold to side fold, at the bottom of the armholes.

4.5.3.2 Waist - Measure across the top edge of the half belt, from side fold to side fold.

4.5.3.3 Back length - Measure from the center point, where the body of the jacket joins the collar, to the seam attaching the knitted waistband.

Source: https://assist.dla.mil -- Downloaded: 2026-11-23T00:01Z
Check the source to verify that this is the current version before use.

4.5.3.4 Sleeve inseam length - Measure, along the inseam of the sleeve, from the center of the gusset to the seam attaching the knitted wristlet.

5. PREPARATION FOR DELIVERY

5.1 Packaging - Packaging shall be Level A or C, as specified (see 6.2(e)).

5.1.1 Level A - The slide fastener shall be fully closed, the snap fastener shall be snapped together, the pocket flaps shall be buttoned, and the collar closing tab shall be folded back and buttoned. Each jacket shall be folded as follows:

(a) Place the jacket face down and fold the sleeves across the back.

(b) Fold in half by bringing the bottom up to the top.

A paper label shall be inserted (see 5.3.1) and each folded jacket shall be individually heat sealed within a clear polyethylene bag of 0.00125 ±20 percent inch gage film. The heat seal seams shall be straight, continuous, and parallel to each other and the edges of the polyethylene bag. The closing heat seal seam, of the bag, shall be as close as possible to the edge of the bag. No jacket shall be deformed, distorted, or bent in the bagged condition nor shall the polyethylene bag be damaged. No part of any jacket shall be caught in any heat sealed seam. One corner of each bag shall contain a hole, 1/4 inch in diameter, to allow the excess air to escape. As an alternate, the final closure of the bag may be accomplished by use of a tuck or reverse flaps. The approximate flat size of the polyethylene bag shall be 16 by 26 inches.

5.1.2 Level C - The jackets shall be folded and packaged to afford the minimum degree of protection necessary to prevent deterioration or damage during shipment under normal environmental conditions and commercial modes of transportation.

5.2 Packing - Packing shall be Level A, B, or C, as specified (see 6.2(e)). Each shipping container shall contain jackets of only one size.

5.2.1 Level A - Ten jackets, packaged as specified in 5.1.1, shall be packed as specified in 5.2.2, except that the fiberboard container shall be Weather Resistant Class, Variety SW, Grade V3c or V3s. In addition, each container shall be reinforced with flat steel strapping or tape banding in accordance with the appendix to PPP-B-636.

5.2.2 Level B - Ten jackets, packaged as specified in 5.1.1, shall be packed, in two equal tiers, within a fiberboard container, approximately 23-1/2 by 15 by 15 inches, conforming to PPP-B-636, Style CSSC, Type CF or SF, Domestic

Source: https://assist.dla.mil -- Downloaded: 2026-11-23T00:01Z
Check the source to verify that this is the current version before use.

Class, Variety SW, Grade 275. The top and bottom of the contents of each shipping container shall be completely covered with a sheet of 30 pound minimum basis weight kraft paper conforming to UU-P-268, Grade B. The body joint and the top and bottom flaps shall be firmly glued together as specified in PPP-B-636. The fiberboard container shall not contain any metal fastenings or stitches. All the seams and joints shall be sealed with 3 inch minimum wide tape conforming to PPP-T-45, Class 2, Type III, Grade A, B, or C. Each container shall be constructed and closed in accordance with the appendix to PPP-B-636. Toward the end of the contract or when there are less than the specified amount for the same size per container, mixed sizes may be packed within the same shipping container (see 5.3.2).

5.2.3 Level C - The jackets, packaged as specified in 5.1, shall be packed within exterior type shipping containers in a manner that shall insure safe transportation, at the lowest rate, to the point of delivery. The shipment shall conform to the minimum requirements, of the rules and regulations, applicable to the mode of transportation selected.

5.3 Marking - In addition to any special marking required by the contract or order, (see 6.2 (f)), the exterior fiberboard containers shall be marked in accordance with MIL-STD-129 and shall include the date of manufacture (month and year).

5.3.1 Polyethylene bag - Prior to heat sealing, a white paper label, with legible and durable black letters and numerals, shall be placed inside each polyethylene bag. The label shall be placed so that the information, on the label, shall be capable of being read through the bag. The paper label shall contain the same information as specified in 5.3.

5.3.2 Mixed sizes container - A white paper label, with legible black letters and numerals, approximately 5 by 4 inches, shall be securely attached to the end and side of each container, containing mixed sizes of the jackets. The label shall contain the following information:

MIXED SIZES
Sizes and quantity of each size

6. NOTES

6.1 Intended use - The jackets covered by this specification are intended to be worn in the intermediate temperature range by flight personnel.

6.2 Ordering data - Procurement documents shall specify the following:

Source: https://assist.dla.mil -- Downloaded: 2026-11-23T00:01Z
Check the source to verify that this is the current version before use.

(a) Title, number and date of this specification.

(b) Size and quantity desired (see 1.2).

(c) Whether first article inspection is waived (see 4.3.1).

(d) Name and address of the first article inspection laboratory (see 4.3.1).

(e) Selection of applicable levels of packaging and packing (see 5.1 through 5.1.2 and 5.2 through 5.2.3).

(f) Whether any special markings are required (see 5.3).

6.3 Patterns - Patterns, for the jackets, will be furnished by the contracting officer, to the contractor, for use in cutting working patterns. The working patterns shall be identical to the Government patterns. Neither the Government patterns nor the working patterns shall be altered in any manner.

6.4 Data - For the information of contractors and contracting officers, any of the data, specified in the applicable documents, listed in Section 2 of this specification, or any referenced lower-tier documents, need not be prepared for the Government and shall not be furnished to the Government, unless specified in the contract or order. The data, to be furnished, shall be listed on DD Form 1423 (Contractor Data Requirements List), which shall be attached to and made a part of the contract or order. NavWeps Form 4200/25 (Drawings, Lists, and Specifications Required) shall be attached, where applicable.

Preparing activity:
Navy - AS
(Project No. 8415-N645)

Source: https://assist.dla.mil -- Downloaded: 2026-11-23T00:01Z
Check the source to verify that this is the current version before use.

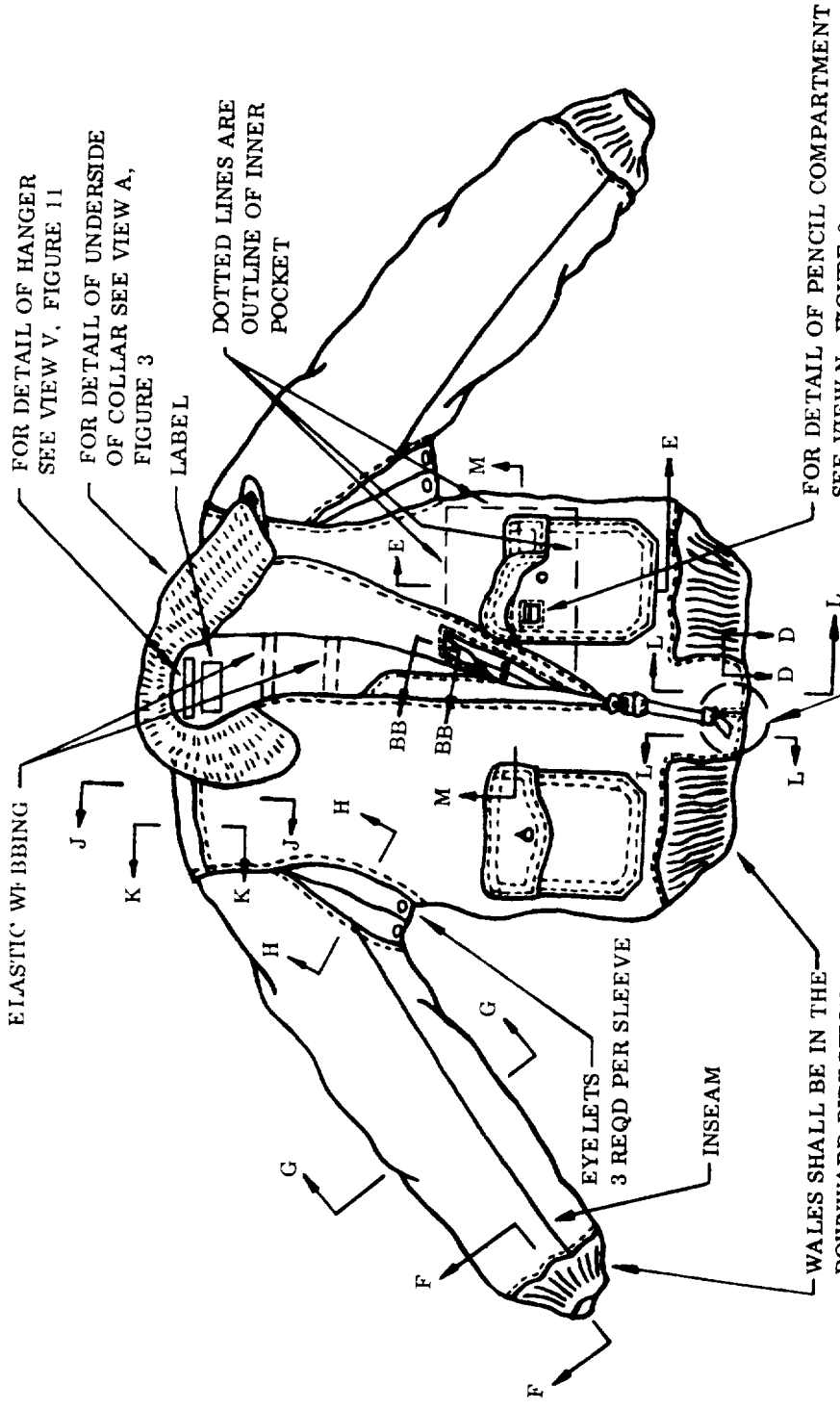

FOR SECTIONS D-D AND E-E, SEE FIGURE 4
FOR SECTIONS F-F, G-G, H-H, J-J, AND K-K, SEE FIGURE 5.
FOR SECTION L-L, SEE FIGURE 6.
FOR SECTION M-M, SEE FIGURE 7.
FOR SECTION BB-BB, SEE FIGURE 11.

FIGURE 1. FRONT VIEW

Source: https://assist.dla.mil -- Downloaded: 2026-11-23T00:01Z
Check the source to verify that this is the current version before use.

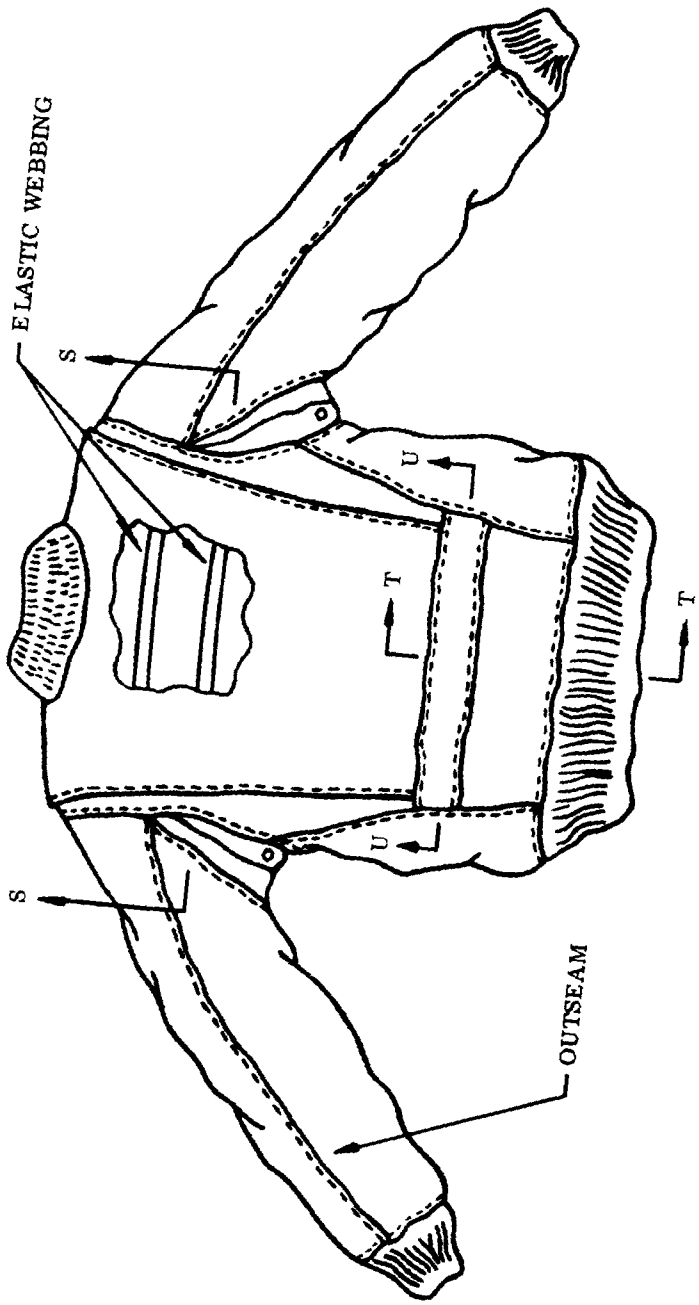

FOR SECTION S-S, SEE FIGURE 9.
FOR SECTIONS T-T AND U-U, SEE FIGURE 10.

FIGURE 2. BACK VIEW

Source: https://assist.dla.mil -- Downloaded: 2026-11-23T00:01Z
Check the source to verify that this is the current version before use.

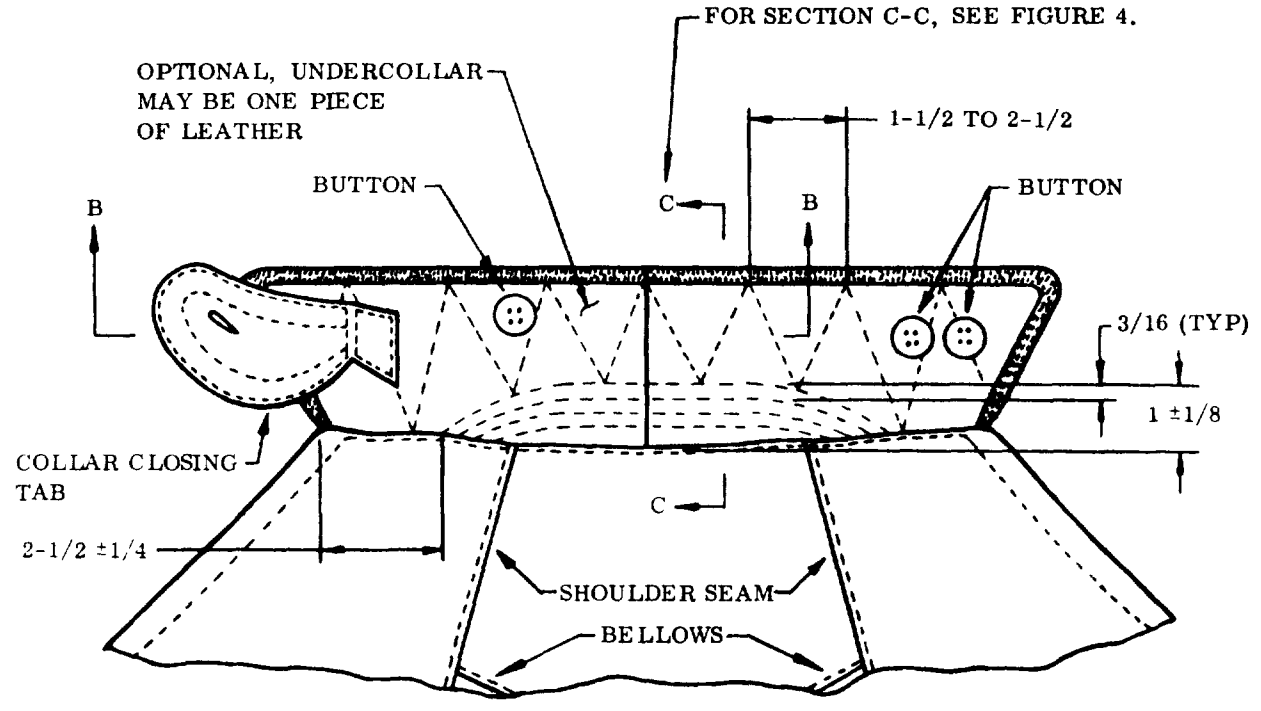

UNDERSIDE OF COLLAR
VIEW A

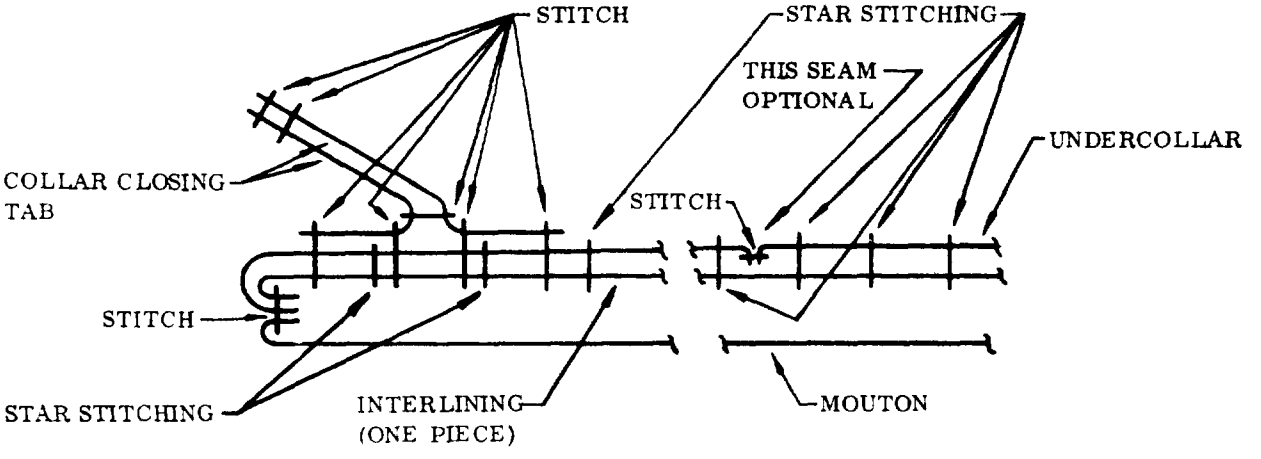

SECTION B-B

DIMENSIONS IN INCHES

FIGURE 3. COLLAR SECTIONS

Source: https://assist.dla.mil -- Downloaded: 2026-11-23T00:01Z
Check the source to verify that this is the current version before use.

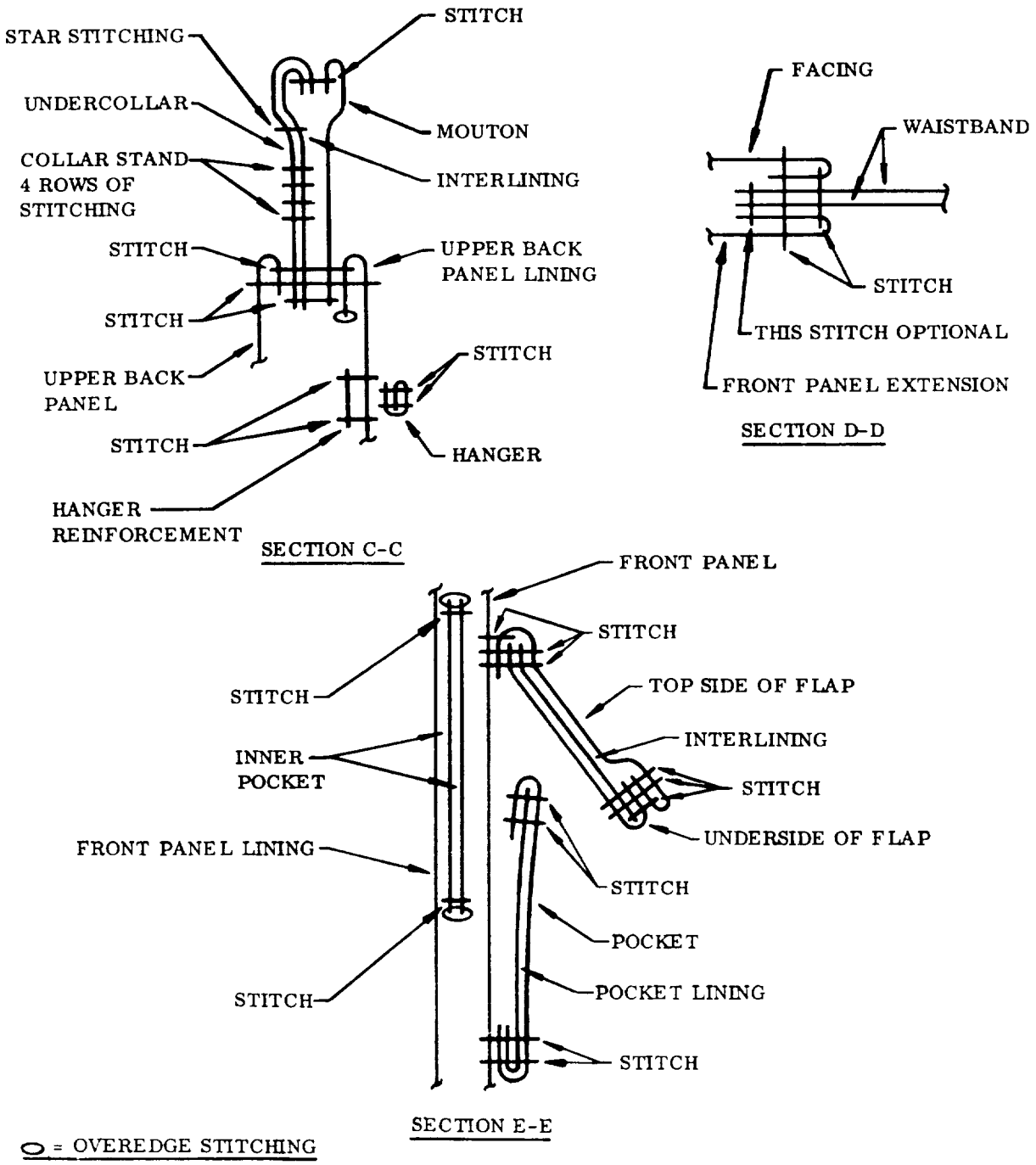

FIGURE 4. COLLAR AND JACKET SECTIONS

Source: https://assist.dla.mil -- Downloaded: 2026-11-23T00:01Z
Check the source to verify that this is the current version before use.

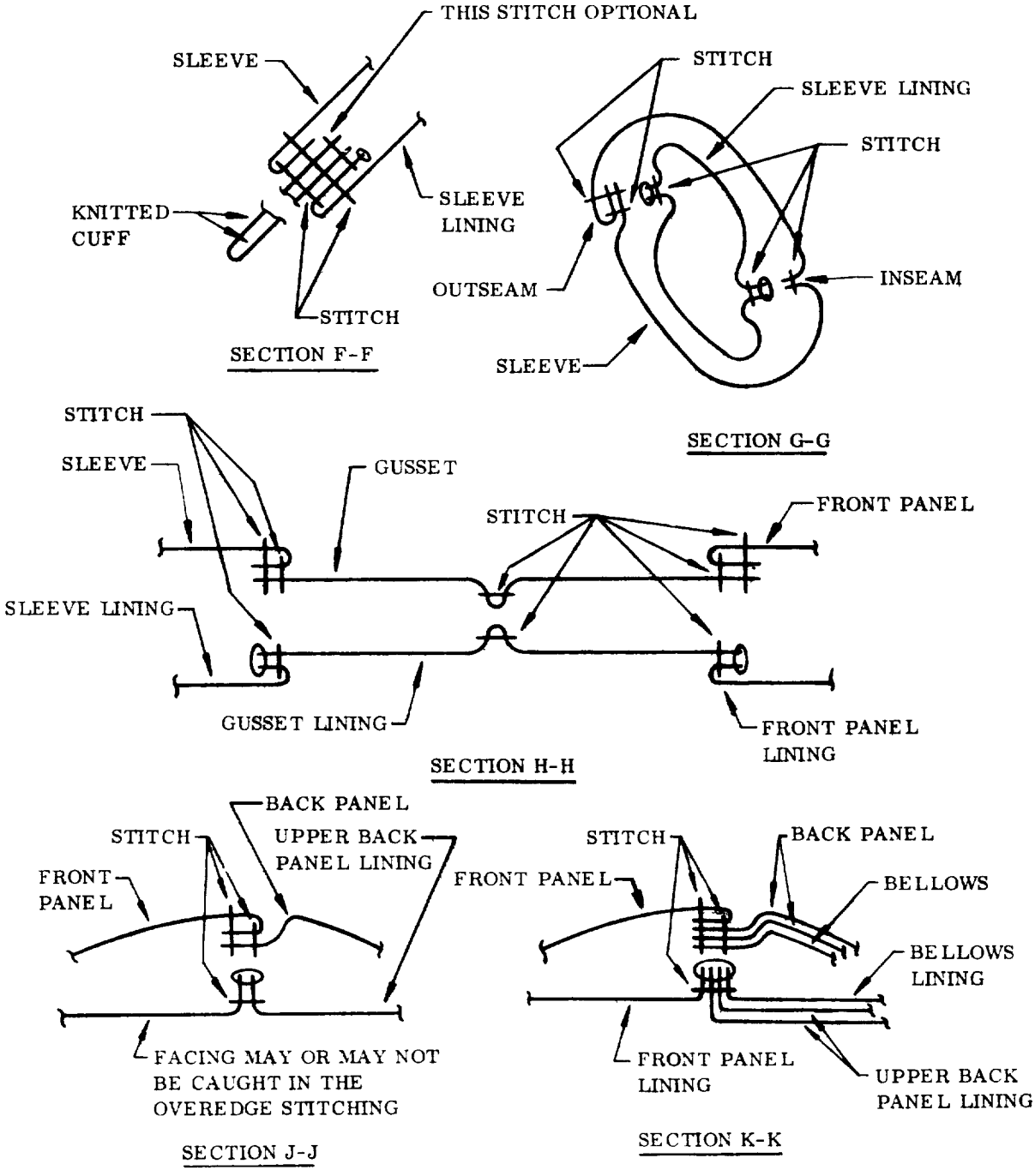

O = OVEREDGE STITCHING

FIGURE 5. JACKET SECTIONS

Source: https://assist.dla.mil -- Downloaded: 2026-11-23T00:01Z
Check the source to verify that this is the current version before use.

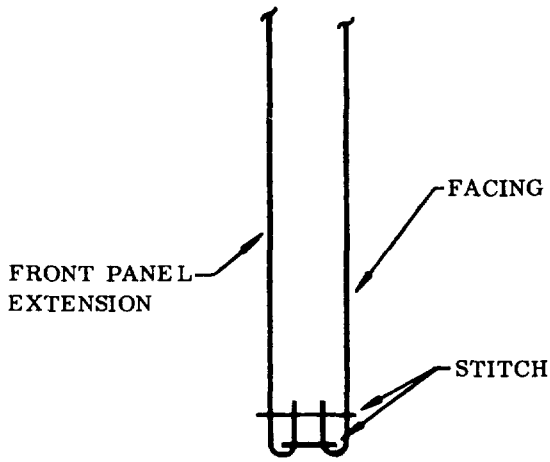

SECTION L-L

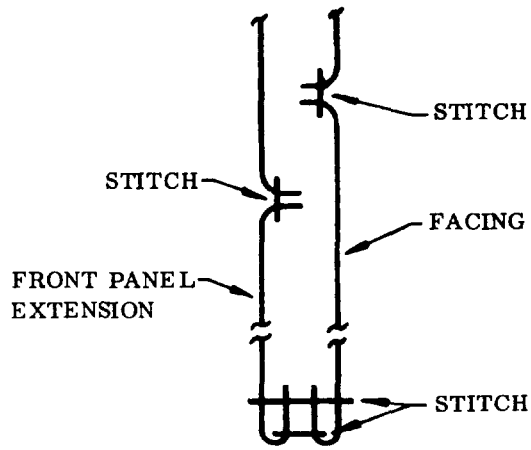

SECTION L-L
ALTERNATE METHOD

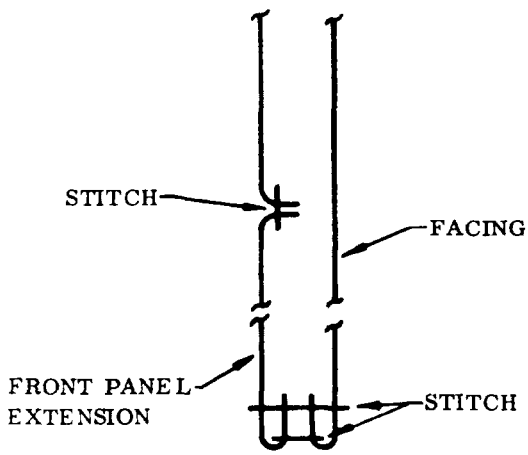

SECTION L-L
ALTERNATE METHOD

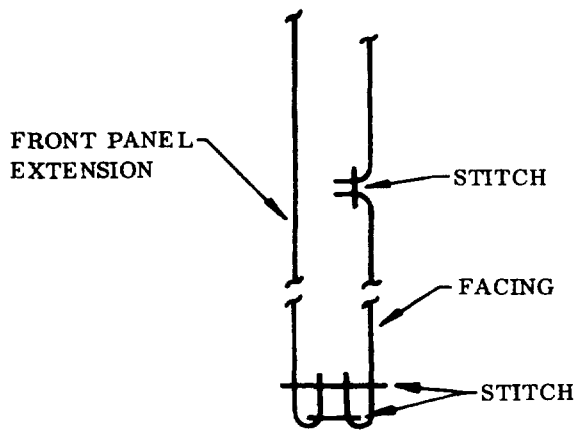

SECTION L-L
ALTERNATE METHOD

FIGURE 6. FOUR METHODS OF SECTION L-L CONSTRUCTION

Source: https://assist.dla.mil -- Downloaded: 2026-11-23T00:01Z
Check the source to verify that this is the current version before use.

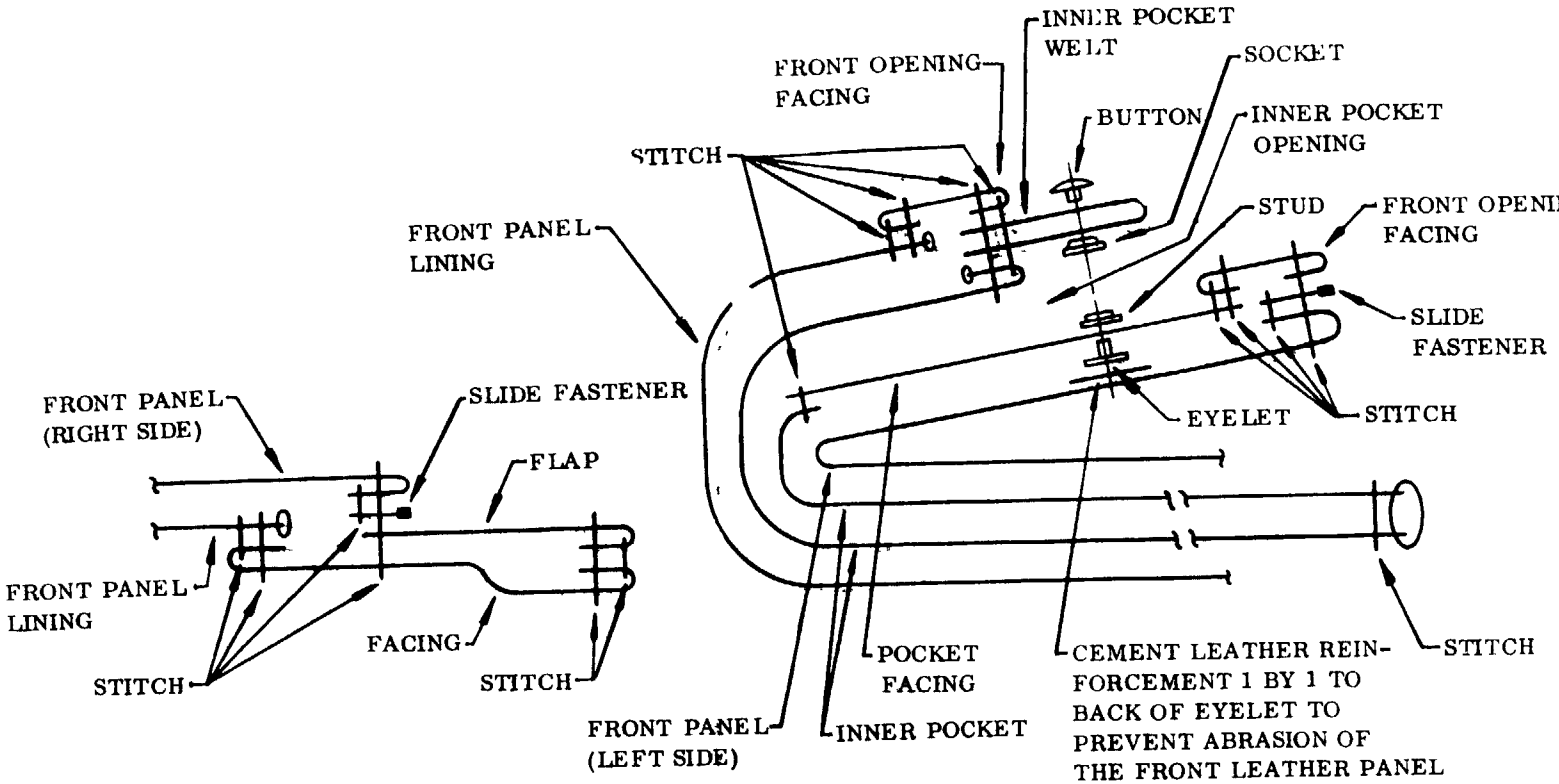

SECTION M-M
(OUTER POCKET NOT SHOWN)

O = OVEREDGE STITCHING

FIGURE 7. JACKET SECTION

Source: https://assist.dla.mil -- Downloaded: 2026-11-23T00:01Z
Check the source to verify that this is the current version before use.

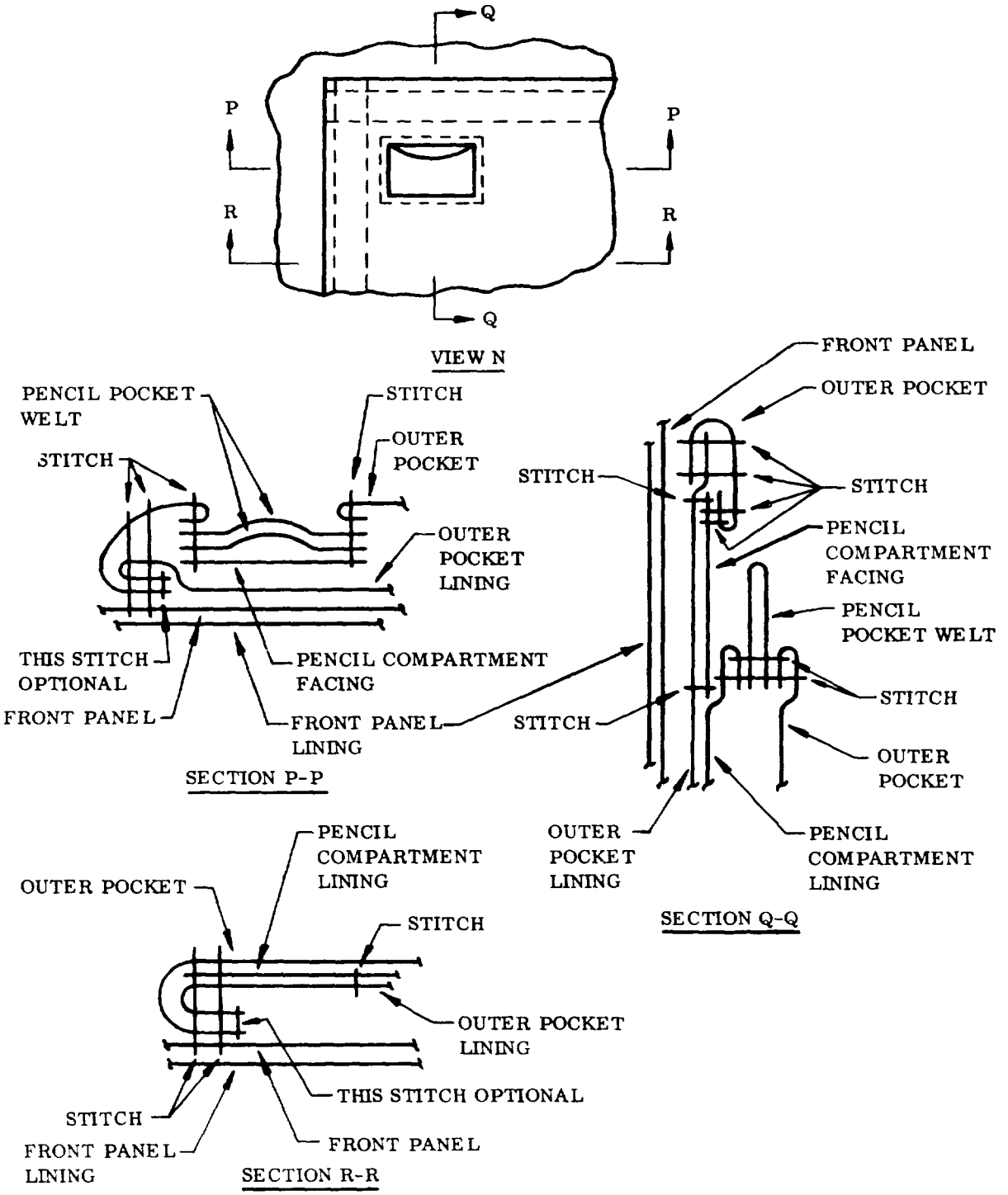

FIGURE 8. PENCIL COMPARTMENT SECTIONS

Source: https://assist.dla.mil -- Downloaded: 2026-11-23T00:01Z
Check the source to verify that this is the current version before use.

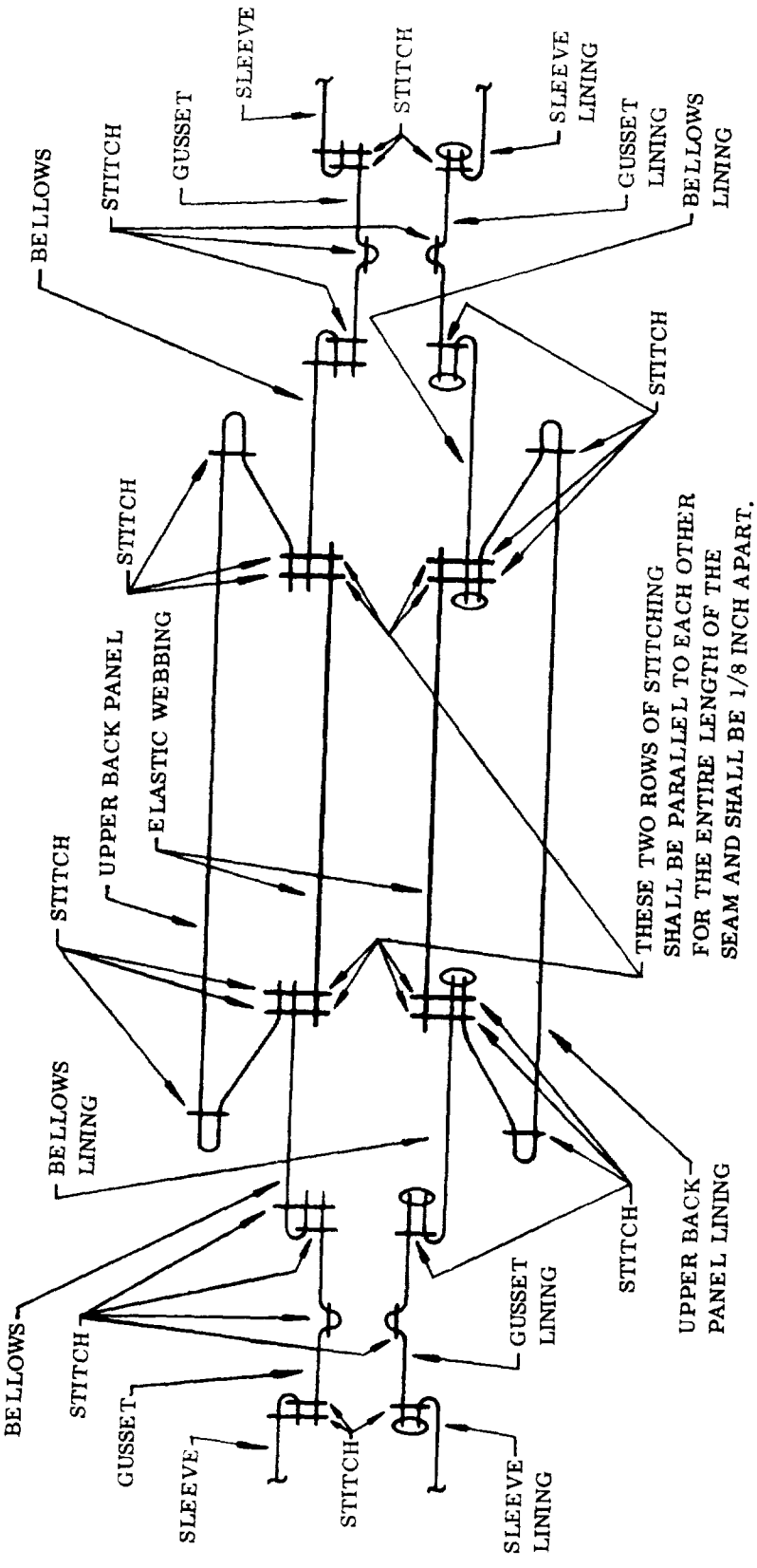

FIGURE 9. JACKET SECTION

Source: https://assist.dla.mil -- Downloaded: 2026-11-23T00:01Z
Check the source to verify that this is the current version before use.

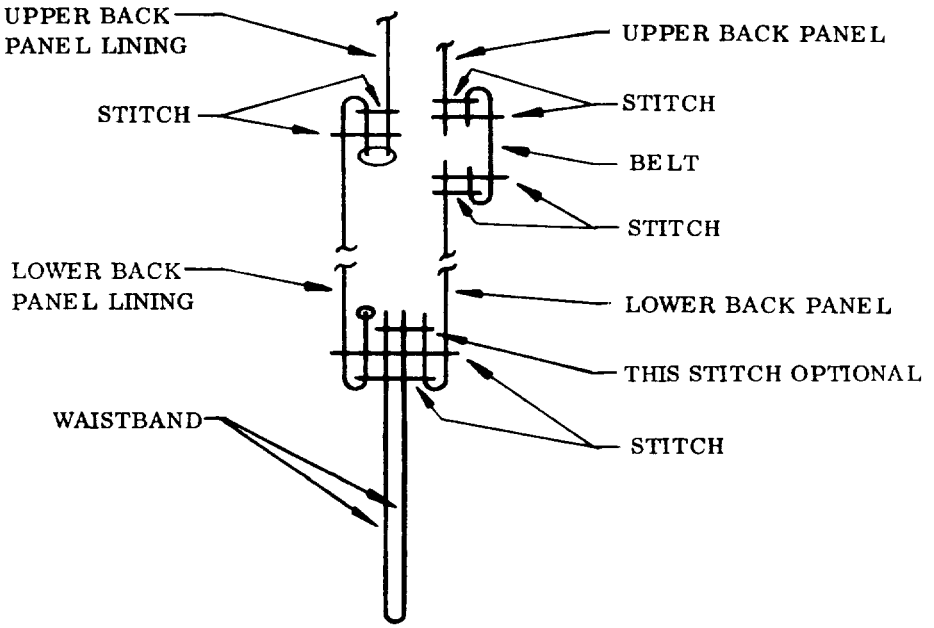

SECTION T-T

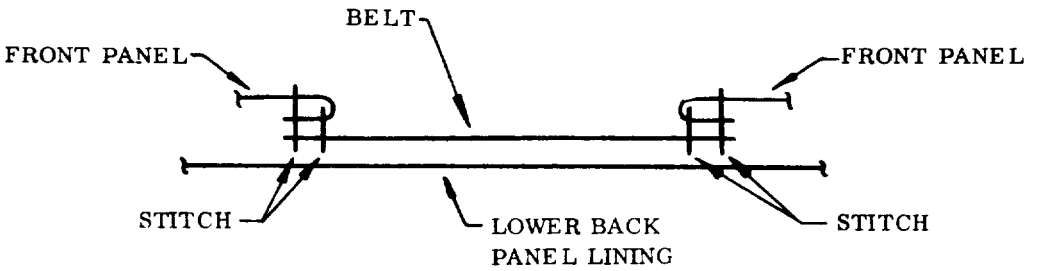

SECTION U-U

⬭ = OVEREDGE STITCHING

FIGURE 10. JACKET SECTIONS

Source: https://assist.dla.mil -- Downloaded: 2026-11-23T00:01Z
Check the source to verify that this is the current version before use.

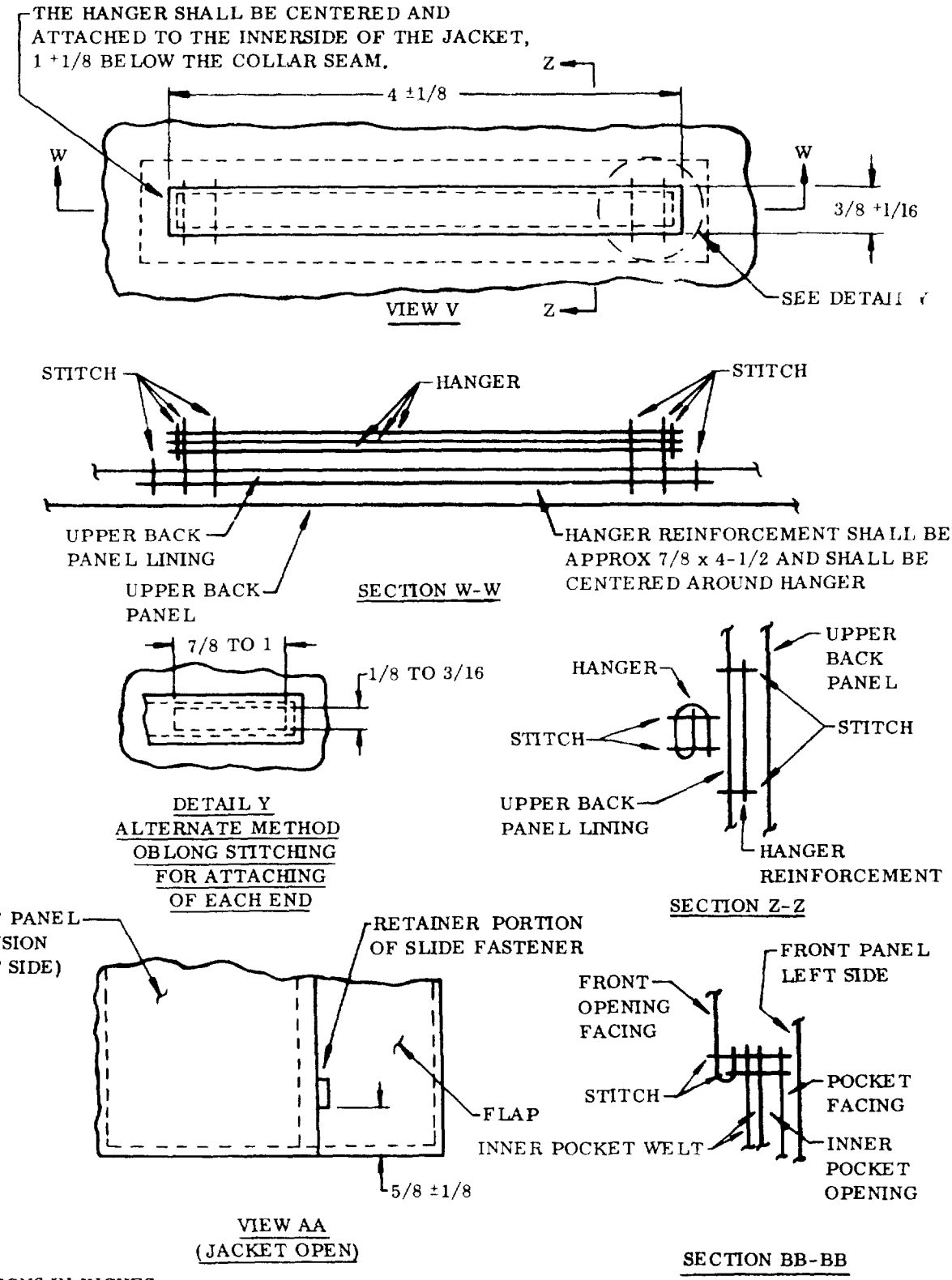

DIMENSIONS IN INCHES

FIGURE 11 HANGER AND JACKET SECTIONS AND VIEW LOCATING RETAINER PORTION OF THE SLIDE FASTENER.

Source: https://assist.dla.mil -- Downloaded: 2026-11-23T00:01Z
Check the source to verify that this is the current version before use.

INDEX

CONTENTS	PARAGRAPH	PAGE
APPLICABLE DOCUMENTS	2.	1
CLASSIFICATION	1.2	1
Size	1.2	1
CLASSIFICATION AND LIST OF DEFECTS		
Assembled dimensions	Table VI	25
Preparation for delivery	Table VII	26
Visual examination of the jackets	Table V	13
Detailed defects applicable to specific parts·	Table V	21
Collar	Table V	21
Front opening	Table V	22
Hanger	Table V	24
Jacket and lining bellows	Table V	23
Label and property markings	Table V	23
Pockets and flaps	Table V	22
Sleeves	Table V	23
Material defects and workmanship damages:	Table V	13
Cleanness	Table V	16
Components and assembly	Table V	16
General	Table V	13
Knitted wrist cuffs and waistband	Table V	15
Leather	Table V	15
Metallic components	Table V	13
Mouton	Table V	15
Seams and stitching	Table V	17
Accuracy of seaming	Table V	17
Buttons	Table V	20
Buttonholes	Table V	20
Gage of stitching	Table V	17
Open seams	Table V	17
Raw edges	Table V	18
Run-offs, skipped, or broken stitches	Table V	18
Seam and stitch type	Table V	19
Stitch tension	Table V	19
Stitches per inch	Table V	19
Shaded parts	Table V	16

Source: https://assist.dla.mil -- Downloaded: 2026-11-23T00:01Z
Check the source to verify that this is the current version before use.

INDEX (Continued)

	PARAGRAPH	PAGE
CLASSIFICATION OF INSPECTION	4.2	10
First article inspection	4.2(a)	10
Quality conformance inspection	4.2(b)	10
CONSTRUCTION	3.4	6
Cutting	3.4.1	6
Seams and stitching:	3.4.3	7
Attaching of the buttons:	3.4.3.2	7
Hand sewing	3.4.3.2.1	8
Machine sewing	3.4.3.2.2	8
Buttonholes:	3.4.3.3	8
Collar closing tab	3.4.3.3.2	8
Pocket flap	3.4.3.3.1	8
Sewing	3.4.3.1	7
Shade and size marking:	3.4.2	6
Adhesive shade and size marking tickets	3.4.2.2	6
Bundling method	3.4.2.1	6
DATA	6.4	29
DESIGN	3.3	6
DIMENSIONS	3.5	8
FIGURES	1 to 11	30 through 40
FIRST ARTICLE		
Inspection	4.3	10
Requirements	3.1	3
Samples	4.3.1	10
INSPECTION METHODS	4.5	11
Color matching	4.5.1	11
Procedure for measuring	4.5.3 through 4.5.3.4	26 and 27
Visual examination:	4.5.2	12
Jackets	4.5.2.1	12
Preparation for delivery	4.5.2.2	25

Source: https://assist.dla.mil -- Downloaded: 2026-11-23T00:01Z
Check the source to verify that this is the current version before use.

INDEX (Continued)

CONTENTS	PARAGRAPH	PAGE
INTENDED USE	6.1	28
LABEL	3.7	9
MATERIALS AND COMPONENTS	3.2	3
Buttons	3.2.7	5
Elastic webbing	3.2.8	5
Eyelets	3.2.11	6
Gimp	3.2.6	4
Hanger reinforcement	3.2.2.4	4
Knit wrist cuffs and waistband	3.2.4	4
Leather:	3.2.1	3
Outershell	3.2.1.1	3
Pockets, flaps, facings, belt, reinforcement, undercollar, and hanger	3.2.1.2	3
Lining:	3.2.2	4
Interlining	3.2.2.3	4
Jacket	3.2.2.1	4
Pockets:	3.2.2.2	4
Inner	3.2.2.2.2	4
Outer	3.2.2.2.1	4
Mouton	3.2.3	4
Slide fastener	3.2.9	5
Snap fasteners	3.2.10	6
Thread	3.2.5	4
ORDERING DATA	6.2	28
PATTERNS	6.3	29
PREPARATION FOR DELIVERY	5.	27
Marking:	5.3	28
Mixed sizes	5.3.2	28
Polyethylene bag	5.3.1	28
Packaging:	5.1	27
Level A	5.1.1	27
Level C	5.1.2	27
Packing:	5.2	27
Level A	5.2.1	27
Level B	5.2.2	27
Level C	5.2.3	28

Source: https://assist.dla.mil -- Downloaded: 2026-11-23T00:01Z
Check the source to verify that this is the current version before use.

INDEX (Continued)

CONTENTS	PARAGRAPH	PAGE
PROPERTY MARKINGS	3.6	9
QUALITY CONFORMANCE INSPECTION	4.4	11
Sampling:	4.4.1	11
Inspection lot:	4.4.1.1	11
Jackets	4.4.1.1.1	11
Preparation for delivery	4.4.1.1.2	11
Sampling for examinations and tests of the jackets and preparation for delivery	4.4.1.2	11
RESPONSIBILITY FOR INSPECTION	4.1	10
SCOPE	1.1	1
WORKMANSHIP	3.8	9

Source: https://assist.dla.mil -- Downloaded: 2026-11-23T00:01Z
Check the source to verify that this is the current version before use.

SPECIFICATION ANALYSIS SHEET

Form Approved
Budget Bureau No 22-R255

INSTRUCTIONS This sheet is to be filled out by personnel, either Government or contractor, involved in the use of the specification in procurement of products for ultimate use by the Department of Defense This sheet is provided for obtaining information on the use of this specification which will insure that suitable products can be procured with a minimum amount of delay and at the least cost Comments and the return of this form will be appreciated Fold on lines on reverse side, staple in corner, and send to preparing activity Comments and suggestions submitted on this form do not constitute or imply authorization to waive any portion of the referenced document(s) or serve to amend contractual requirements

SPECIFICATION

MIL-J-7823E(AS) JACKETS, FLYER'S, INTERMEDIATE, TYPE G-1

ORGANIZATION

CITY AND STATE

CONTRACT NUMBER

MATERIAL PROCURED UNDER A

☐ DIRECT GOVERNMENT CONTRACT ☐ SUBCONTRACT

1 HAS ANY PART OF THE SPECIFICATION CREATED PROBLEMS OR REQUIRED INTERPRETATION IN PROCUREMENT USE?

A GIVE PARAGRAPH NUMBER AND WORDING

B RECOMMENDATIONS FOR CORRECTING THE DEFICIENCIES

2 COMMENTS ON ANY SPECIFICATION REQUIREMENT CONSIDERED TOO RIGID

3 IS THE SPECIFICATION RESTRICTIVE?

☐ YES ☐ NO *(If "yes", in what way?)*

4 REMARKS *(Attach any pertinent data which may be of use in improving this specification If there are additional papers, attach to form and place both in an envelope addressed to preparing activity)*

SUBMITTED BY *(Printed or typed name and activity - Optional)*

DATE

DD FORM 1 JAN 66 1426

REPLACES EDITION OF 1 OCT 64 WHICH MAY BE USED

Source: https://assist.dla.mil -- Downloaded: 2026-11-23T00:01Z
Check the source to verify that this is the current version before use.

FOLD

DEPARTMENT OF THE NAVY
Naval Air Engineering Center
Philadelphia, Pennsylvania 19112

POSTAGE AND FEES PAID
NAVY DEPARTMENT

OFFICIAL BUSINESS

Weapons Engineering Standardization Office (Code X)
Naval Air Engineering Center
Philadelphia, Pennsylvania 19112

FOLD

Source: https://assist.dla.mil -- Downloaded: 2026-11-23T00:01Z
Check the source to verify that this is the current version before use.