INCH-POUND

MIL-STD-1913 (AR)
3 FEBRUARY 1995

MILITARY STANDARD

DIMENSIONING OF ACCESSORY MOUNTING RAIL FOR SMALL ARMS WEAPONS

AMSC N/A

FSC 1005

DISTRIBUTION STATEMENT A. Approved for public release; distribution is unlimited.

Source: https://assist.dla.mil -- Downloaded: 2026-11-25T15:30Z
Check the source to verify that this is the current version before use.

Source: https://assist.dla.mil -- Downloaded: 2026-11-25T15:30Z
Check the source to verify that this is the current version before use.

FOREWORD

1. This military standard is approved for use by all Departments and Agencies of the Department of Defense.

2. Beneficial comments (recommendations, additions, deletions) and any pertinent data which may be of use in improving this document should be addressed to: Commander, U.S. Army Armament Research, Development and Engineering Center, Attn: SMCAR-QAF-S, Picatinny Arsenal, NJ 07806-5000, by using the Standardization Document Improvement Proposal (DD Form 1426) appearing at the end of this document or by letter.

Source: https://assist.dla.mil -- Downloaded: 2026-11-25T15:30Z
Check the source to verify that this is the current version before use.

C O N T E N T S

PARAGRAPH		PAGE
1.	SCOPE	1
1.1	Scope	1
2.	APPLICABLE DOCUMENTS	1
2.1	Government documents	1
2.1.1	Specifications, standards and handbooks	1
2.2	Non-Government publications	1
2.3	Order of precedence	2
3.	DEFINITIONS	2
3.1	Accessory	2
3.2	Accessory mounting rail	2
3.3	Dovetail	2
3.4	Recoil groove	2
3.5	Profile	2
3.6	Small arms	2
4.	GENERAL REQUIREMENTS	2
4.1	Dimensioning and Tolerancing	2
4.1.1	Edge break	2
4.1.2	Fillet radii	2
5.	DETAILED REQUIREMENTS	3
5.1	Accessory mounting rail profile	3
5.2	Recoil groove	3
5.3	Length of accessory mounting rail	3
6.	NOTES	3
6.1	Intended use	3
6.2	Issue of DODISS	3
6.3	Application	3
6.4	Subject term (key word) listing	3

LIST OF FIGURES

Figure		
1	Accessory mounting rail profile	4
2	Recoil groove	5
	CONCLUDING MATERIAL	6

Source: https://assist.dla.mil -- Downloaded: 2026-11-25T15:30Z
Check the source to verify that this is the current version before use.

1. SCOPE

1.1 Scope. This document establishes standard methods of dimensioning accessory mounting rails for small arms weapon systems. It also establishes uniform accessory mounting rails and requirements that are interchangeable among the different units of the Defense Department. Adherence to this standard is mandatory in the preparation of drawings, specifications or technical data packages for the accessory mounting rail used for small arms weapons.

2. APPLICABLE DOCUMENTS

2.1 Government documents.

2.1.1 Specifications, standards, and handbooks. The following specifications, standards, and handbooks form a part of this document to the extent specified herein. Unless otherwise specified, the issues of these documents are those listed in the issue of the Department of Defense Index of Specifications and Standards (DODISS) and supplement thereto, cited in the solicitation (see 6.2)

SPECIFICATIONS

MILITARY

MIL-W-13855 - Weapons, Small Arms and Aircraft Armament Subsystems, General Specification for

(Unless otherwise indicated, copies of federal and military specifications, standards and handbooks are available from the DODSSP - Customer Service, Standardization Documents Order Desk, Bldg. 4D, 700 Robbins Avenue, Philadelphia, PA 19111-5094.)

2.2 Non-Government publications. The following documents form a part of this military standard to the extent specified herein. Unless otherwise specified, the issues of the documents which are DOD adopted are those listed in the issue of the DODISS cited in the solicitation. Unless otherwise specified, the issues of documents not listed in the DODISS are the issues of the documents cited in the solicitation (see 6.2).

AMERICAN NATIONAL STANDARDS INSTITUTE

ANSI Y14.5M - Dimensioning and Tolerancing

(Application for copies should be addressed to the American National Standards Institute, 1430 Broadway, New York, NY 10018)

Source: https://assist.dla.mil -- Downloaded: 2026-11-25T15:30Z
Check the source to verify that this is the current version before use.

2.3 Order of precedence. In the event of a conflict between the text of this document and the references cited herein, the text of this document takes precedence. Nothing in this document, however, supersedes applicable laws and regulations unless a specific exemption has been obtained.

3. DEFINITIONS

3.1 Accessory. In this document, accessory refers to items which can be attached to the accessory mounting rails such as laser pointers, fire control devices, night vision devices, grenade launchers, optics, thermal weapon sights etc.

3.2 Accessory mounting rail. A grooved dovetail feature that serves as a mounting platform used to mount accessories.

3.3 Dovetail. The wedge shaped cross-section of the accessory mounting rail.

3.4 Recoil groove. Recoil groove is a groove on the accessory mounting rail that prevents forward and aft movement of an accessory.

3.5 Profile. In this document, profile refers to the cross sectional outline as depicted in Figure 1 which establishes a dimensional tolerance zone extending the length, width and depth of the considered feature.

3.6 Small arms. Small arms as used in this document is defined as man-portable individual and crew-served weapon systems used against protected and unprotected personnel and light/unarmored vehicles. Included among these weapon systems are ballistic and non-ballistic systems and associated munitions, aiming, powering, storage and other ancillary items.

4. GENERAL REQUIREMENTS

4.1 Dimensioning and tolerancing. Dimensioning and tolerancing of the accessory mounting rail for small arms shall be in accordance with MIL-W-13855, ANSI Y14.5M (using inch-pound units in lieu of metric.) and Figures 1 and 2.

4.1.1 Edge break. Edge break on the accessory mounting rail shall be .002 inch + .010 inch.

4.1.2 Fillet radii. Fillet radii on the accessory mounting rail shall be .020 inch + .015 inch.

Source: https://assist.dla.mil -- Downloaded: 2026-11-25T15:30Z
Check the source to verify that this is the current version before use.

5. DETAILED REQUIREMENTS

5.1 Accessory mounting rail profile. Standard dimensioning and tolerancing for the profile of the accessory mounting rail for small arms weapons shall be as shown in Figure 1.

5.2 Recoil groove. The standard dimensions of the recoil groove of the accessory mounting rail for small arms weapons shall be as shown in Figure 2.

5.3 Length of accessory mounting rail. The length of the accessory mounting rail is dependent upon the particular application of small arms weapon it is to be mounted on.

6. NOTES

(This section contains information of a general or explanatory nature which may be helpful, but is not mandatory.)

6.1 Intended use. This standard contains requirements for the dimensioning and tolerancing of Accessory Mounting Rails for Small Arms Weapons.

6.2 Issue of DODISS. When this standard is used in acquisition, the issue of the DODISS must be cited in the solicitation (see 2.1.1 and 2.2).

6.3 Application. The location of the mounting rail and its features are dependent upon the particular application. Careful consideration should be given to the following:

a. Available areas to place the mounting rail on a small arm.
b. The length of the mounting rail.
c. The number of grooves on the mounting rail.
d. The relationship of the mounting rail location to that which is required by the accessory.
e. The effect on the arms user (i.e., eye relief, safe eye distance, etc.)

6.4 Subject term (key word) listing.

Accessory	Machine Gun	Carbine
Dovetail	Modular Weapon	Rifle
M4 Modular Weapon	Mounting Rail	Small arms
M16 Modular Weapon	Rail	Small arms weapons

Source: https://assist.dla.mil -- Downloaded: 2026-11-25T15:30Z
Check the source to verify that this is the current version before use.

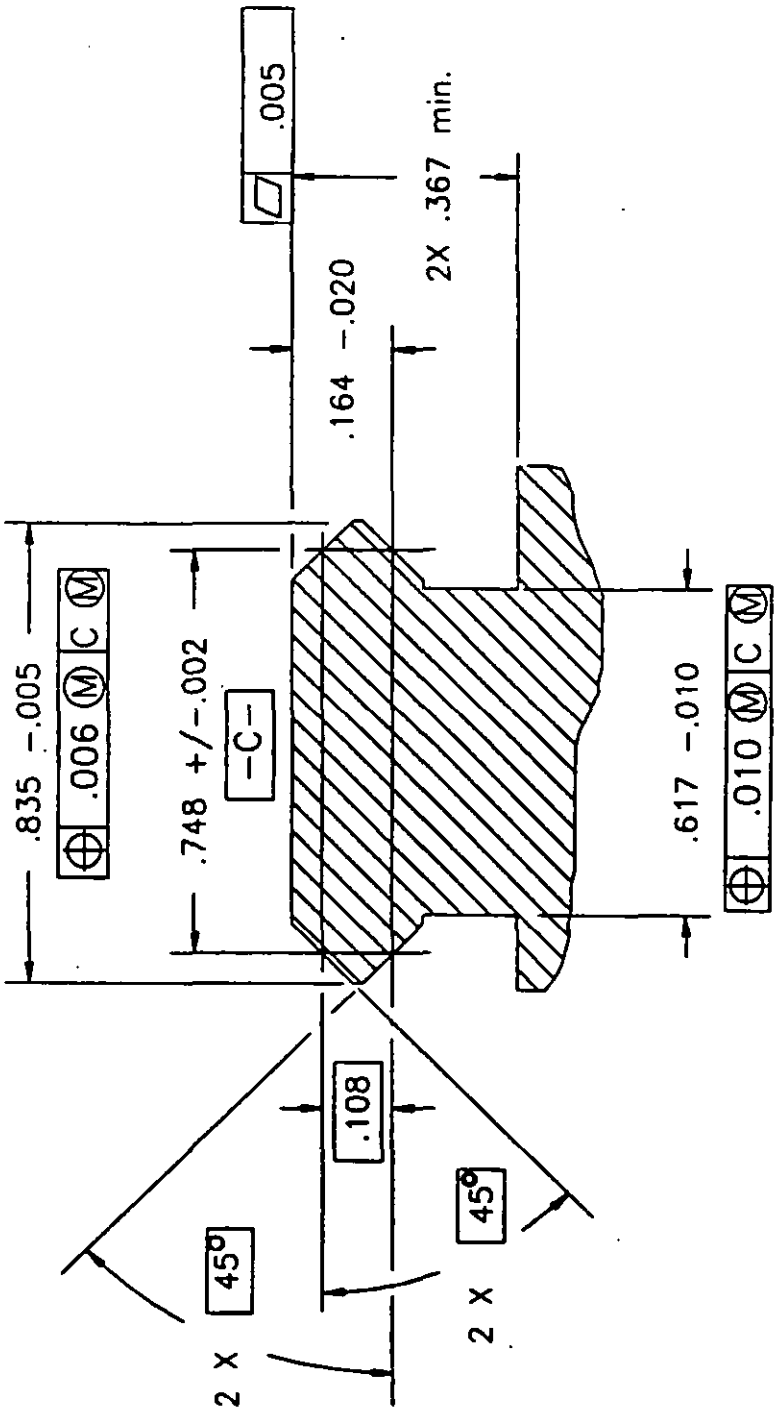

FIGURE 1. Accessory mounting rail profile

Source: https://assist.dla.mil -- Downloaded: 2026-11-25T15:30Z
Check the source to verify that this is the current version before use.

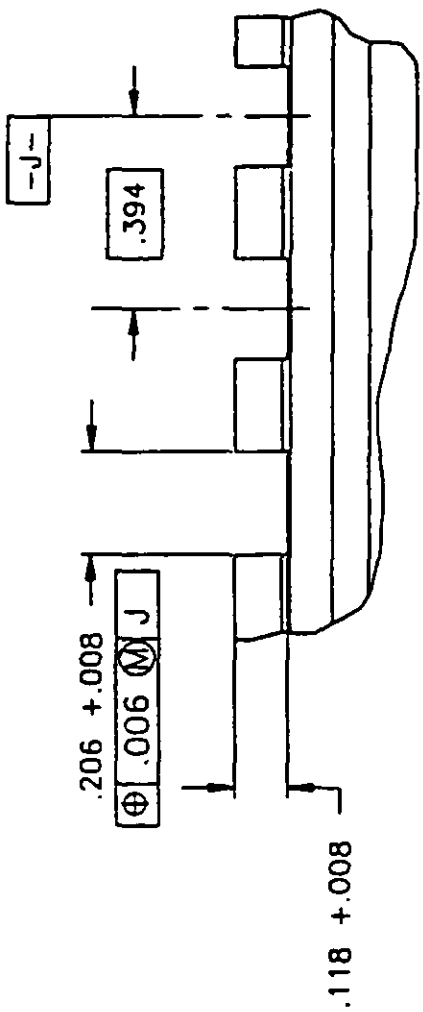

Note

1. Groove dimensions apply to all grooves. The number of grooves are dependant on application.
2. Center to center dimension applies between adjacent grooves.

FIGURE 2. Recoil groove

Source: https://assist.dla.mil -- Downloaded: 2026-11-25T15:30Z
Check the source to verify that this is the current version before use.

CONCLUDING MATERIAL

Custodian:
ARMY-AR

Preparing activity:
ARMY-AR

(Project 1005-0825)

Source: https://assist.dla.mil -- Downloaded: 2026-11-25T15:30Z
Check the source to verify that this is the current version before use.

STANDARDIZATION DOCUMENT IMPROVEMENT PROPOSAL

INSTRUCTIONS

1. The preparing activity must complete blocks 1, 2, 3, and 8. In block 1, both the document number and revision letter should be given.
2. The submitter of this form must complete blocks 4, 5, 6, and 7.
3. The preparing activity must provide a reply within 30 days from receipt of the form.

NOTE: This form may not be used to request copies of documents, nor to request waivers, or clarification of requirements on current contracts. Comments submitted on this form do not constitute or imply authorization to waive any portion of the referenced document(s) or to amend contractual requirements.

I RECOMMEND A CHANGE:	1. DOCUMENT NUMBER	2. DOCUMENT DATE (YYMMDD)
	MIL-STD-1913	9502083

3. DOCUMENT TITLE: DIMENSIONING OF ACCESSORY MOUNTING RAIL FOR SMALL ARMS WEAPONS

4. NATURE OF CHANGE (Identify paragraph number and include proposed rewrite, if possible. Attach extra sheets if needed.)

5. REASON FOR RECOMMENDATION

6. SUBMITTER

a. NAME (Last, First, Middle Initial)	b. ORGANIZATION	
c. ADDRESS (Include Zip Code)	d. TELEPHONE (Include Area Code) (1) Commercial (2) AUTOVON (If applicable)	7. DATE SUBMITTED (YYMMDD)

8. PREPARING ACTIVITY

a. NAME	b. TELEPHONE (Include Area Code)	
U.S. ARMY ARDEC STANDARDIZATION OFFICE	(1) Commercial 201-724-6675	(2) AUTOVON DSN-880-6675
c. ADDRESS (Include Zip Code) ATTN: SMCAR-BAC-S PICATINNY ARSENAL, NJ 07806-5000	IF YOU DO NOT RECEIVE A REPLY WITHIN 45 DAYS, CONTACT: Defense Quality and Standardization Office 5203 Leesburg Pike, Suite 1403, Falls Church, VA 22041-3466 Telephone (703) 756-2340 AUTOVON 289-2340	

DD Form 1426, OCT 89 — *Previous editions are obsolete.* — 198 290

Source: https://assist.dla.mil -- Downloaded: 2026-11-25T15:30Z
Check the source to verify that this is the current version before use.