INCH-POUND

MS35489K
20 June 2012
SUPERSEDING
MS35489J
17 February 1989

DETAIL SPECIFICATION SHEET

GROMMETS, SYNTHETIC AND SILICONE RUBBER, HOT-OIL AND COOLANT RESISTANT

This specification is approved for use by all Departments and Agencies of the Department of Defense.

The requirements for acquiring the product described herein shall consist of this specification sheet and procurement specification NASM3036.

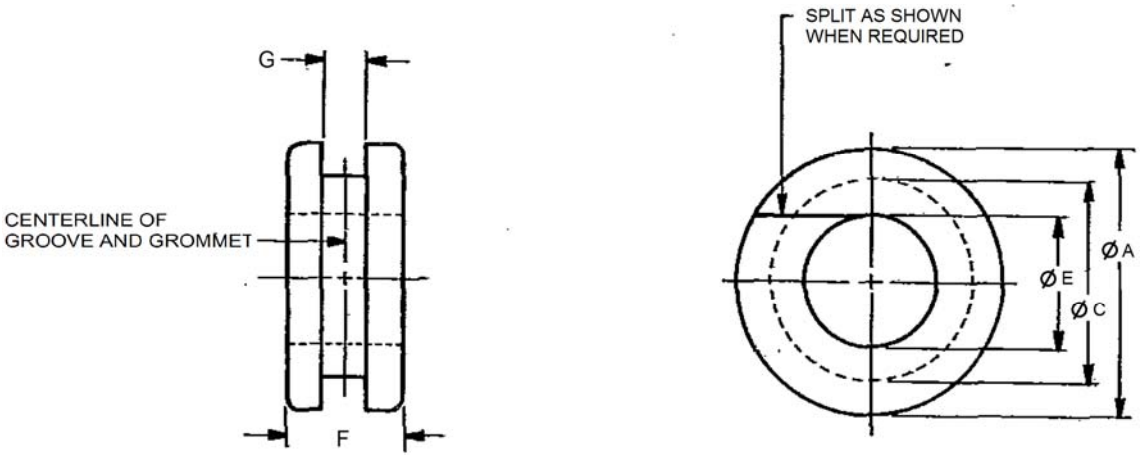

FIGURE 1. GROMMET.

Table I. Dash Numbers and Dimensions.

ØE Hole	ØC Groove	ØA Outside	Groove Width G									
			.062		.094		.125		.188		.250	
			Dash No.	F	Dash No.	F	Dash No.	F	Dash No.	F	Dash No.	F
.125	.188	.312	140	.188								
.125	.250	.344	1	.188	142	.218						
.125	.375	.500			143	.312						
.125	.562	.750	2	.188			31	.250	60	.312	89	.375
.125	1.000	1.250	3	.250			32	.312	61	.375	90	.438
.188	.312	.438	4	188	144	.250	33	.250	62	.312	91	.375
.188	.562	.750	134	.188	145	.468	137	.250	138	.312	139	.375
.188	.625	.875	5	.188			34	.250	63	.312	92	.375
.250	.438	.562			146	.219						
.250	.438	.625	6	.188			35	.250	64	.312	93	.375
.250	.750	1.000	7	.250			36	.312	65	.375	94	.438
.250	1.000	1.250	8	.250			37	.312	66	.375	95	.438
.312	.562	.812	9	.312			38	.375	67	.438	96	.500
.312	.750	1.000	10	.312			39	.375	68	.438	97	.500
.312	.812	1.062	118	.312			122	.375	136	.438	130	.500
.375	.500	.641			147	.250						
.375	.500	.656	141	.250								
.375	.625	.875	11	.312			40	.375	69	.438	98	.500
.375	1.000	1.250	12	.250	148	.281	41	.312	70	.375	99	.438
.438	.688	.938	13	.312			42	.375	71	.438	100	.500
.500	.750	1.000	149	.250	150	.281						
.500	.812	1.062	14	.312			43	.375	72	.438	101	.500
.500	1.250	1.500	15	.250			44	.312	73	.375	102	.438
.562	.812	1.062	16	.312			45	.375	74	.438	103	.500
.625	.875	1.125	17	.312	151	.344	46	.375	75	.438	104	.500
.625	.969	1.250			152	.438						
.625	1.250	1.500	18	.250			47	.312	76	.375	105	.438
.688	1.000	1.312	19	.375	153	.406	48	.438	77	.500	106	.562
.750	1.062	1.375	20	.375	154	.312	49	.438	78	.500	107	.562
.750	1.250	1.625	135	.250			123	.312	127	.375	131	.438
.750	1.438	1.812	21	.375			50	.438	79	.500	108	.562
.750	1.625	2.000	120	.375			124	.438	128	.500	132	.562
.875	1.125	1.500			155	.344						
.875	1.250	1.625	22	.438			51	.500	80	.562	109	.625
.875	1.625	2.000	121	.438			125	.500	129	.562	133	.625
1.000	1.375	1.750	23	.438	156	.375	52	.500	81	.562	110	.625
1.000	1.875	2.250	24	.438			53	.500	82	.562	111	.625
1.250	2.375	2.750	25	.438			54	.500	83	.562	112	.625
1.250	2.500	2.875	26	.438			55	.500	84	.562	113	.625
1.500	1.750	2.125	27	.438			56	.500	85	.562	114	.625
1.500	2.750	3.250	28	.438			57	.500	86	.562	115	.625
1.750	3.250	3.750	29	.500			58	.562	87	.625	116	.688
2.000	3.500	4.000	30	.500			59	.562	88	.625	117	.688

Requirements:

1. MATERIAL: Rubber, synthetic, composition A, in accordance with procurement document, rubber, silicone, composition B, in accordance with procurement document, NASM3036.

2. COLOR: Black (composition A), red or orange (composition B).

3. PART NUMBER: The part number consists of the basic MS number. Followed by a dash number from table I, plus a material code letter "X" for silicone rubber, no code letter for synthetic rubber.

Example: MS35489-14 X.

Material code
"X" – Silicone rubber
No Code = Synthetic rubber

Dash number

Basic MS number

MS35489-14x INDICATES - Grommet, silicone rubber, hot-oil and coolant resistant; groove width .062; hole diameter .500; groove diameter .812; outside diameter 1.062; thickness .312.

4. TOLERANCE: Tolerances shall be ±.031 inch for thickness (F) and outside diameter (ØA); ±.016 inch for all other dimensions.

Notes:

1. All dimensions are in inches unless otherwise specified.

2. Supersession: Replacement part number relationships shall be in accordance with table II. Cancelled MS35490 grommets may be used to replace MS35490 grommets until existing stocks are depleted. Do not use MS35490 grommets to replace MS35489 or AN931 grommets. AN931 grommets and superseding MS35489 grommets are universally, functionally and dimensionally interchangeable.

3. In the event of a conflict between the text of this standard and the references cited herein, the text of this standard shall take precedence.

4. Grommets previously procured with a split (suffix "S") are no longer procured or stocked by services. For replacement use solid grommets, and split at assembly.

Table II. Replacement Part Numbers.

Part Number			Part Number			Part Number			Part Number		
Canceled AN931	Canceled MS35490 1/	Superseded by MS35489	Canceled AN931	Canceled MS35490 1/	Superseded by MS35489	Canceled AN931	Canceled MS35490 1/	Superseded by MS35489	Canceled AN931	Canceled MS35490 1/	Superseded by MS35489
	1	1									
2-9	2	2	A2-9	25	31	B2-9	48	60	C2-9	71	89
2-16	3	3	A2-16	26	32	B2-16	49	61	C2-16	72	90
3-5	4	4	A3-5	27	33	B3-5	50	62	C3-5	73	91
3-9	5	134	A3-9	28	137	B3-9	51	138	C3-9	74	139
3-10		5	A3-10		34	B3-10		63	C3-10		92
4-7	6	6	A4-7	29	35	B4-7	52	64	C4-7	75	93
4-12	7	7	A4-12	30	36	B4-12	53	65	C4-12	76	94
4-16	8	8	A4-16	31	37	B4-16	54	66	C4-16	77	95
5-9	9	9	A5-9	32	38	B5-9	55	67	C5-9	78	96
5-12	10	10	A5-12	33	39	B5-12	56	68	C5-12	79	97
5-13		118	A5-13		122	B5-13		136	C5-13		130
6-10	11	11	A6-10	34	40	B6-10	57	69	C6-10	80	98
6-16	12	12	A6-16	35	41	B6-16	58	70	C6-16	81	99
7-11	13	13	A7-11	36	42	B7-11	59	71	C7-11	82	100
8-13	14	14	A8-13	37	43	B8-13	60	72	C8-13	83	101
8-20	15	15	A8-20	38	44	B8-20	61	73	C8-20	84	102
9-13	16	16	A9-13	39	45	B9-13	62	74	C9-13	85	103
10-14	17	17	A10-14	40	46	B10-14	63	75	C10-14	86	104
10-20	18	18	A10-20	41	47	B10-20	64	76	C10-20	87	105
11-16	19	19	A11-16	42	48	B11-16	65	77	C11-16	88	106
12-17	20	20	A12-17	43	49	B12-17	66	78	C12-17	89	107
12-20		135	A12-20		123	B12-20		127	C12-20		131
12-23	21	21	A12-23	44	50	B12-23	67	79	C12-23	90	108
12-26		120	A12-26		124	B12-26		128	C12-26		132
14-20	22	22	A14-20	45	51	B14-20	68	80	C14-20	91	109
14-26		121	A14-26		125	B14-26		129	C14-26		133
16-22	23	23	A16-22	46	52	B16-22	69	81	C16-22	92	110
16-30		24	A16-30		53	B16-30		82	C16-30		111
20-38		25	A20-38		54	B20-38		83	C20-38		112
20-40		26	A20-40		55	B20-40		84	C20-40		113
24-28	24	27	A24-28	47	56	B24-28	70	85	C24-28	93	114
24-44		28	A24-44		57	B24-44		86	C24-44		115
28-52		29	A28-52		58	B28-52		87	C28-52		116
32-56		30	A32-56		59	B32-56		88	C32-56		117

1/ MS35489 solid grommets should be split at assembly when necessary for replacement of MS35490 split grommets.

5. CHANGES FROM PREVIOUS ISSUE. Marginal notations are not used in this revision to identify changes with respect to the previous issue due to the extent of the changes.

MILITARY INTEREST

Custodians:
Army - AR
Navy - OS
Air Force - 99

Preparing activity:
DLA - IS

(Project 5325-2012-009)

Review activities:
Army - CR, GL, MI
Navy – AS, EC, MC, SA
Other - NS

NOTE: The activities listed above were interested in this document as of the date of this document. Since organizations and responsibilities can change, you should verify the currency of the information above using the ASSIST Online database at https://assist.dla.mil.