INCH-POUND

MIL-STD-1625D(SH)
27 August 2009

SUPERSEDING
MIL-STD-1625C(SH)
25 August 1987

DEPARTMENT OF DEFENSE
STANDARD PRACTICE

SAFETY CERTIFICATION PROGRAM FOR DRYDOCKING FACILITIES AND SHIPBUILDING WAYS FOR U.S. NAVY SHIPS

AMSC N/A

FSC 1950

FOREWORD

1. This standard is approved for use by the Naval Sea Systems Command, Department of the Navy, and is available for use by all Departments and Agencies of the Department of Defense.

2. The Safety Certification Program (SCP) for drydocking facilities and shipbuilding ways, including transfer facilities, has been established to ensure the safety of U.S. Navy ships listed in the Naval Vessel Register that are to be drydocked or built on these facilities. The certification procedures include an evaluation and approval of data associated with the design, material condition, and operation of the facilities. These procedures are described in detail in this Military Standard (hereinafter referred to as the "standard").

3. The certification procedures, contents of certification reports, and technical requirements for certification are described in this standard. The scope of the SCP and general certification requirements are provided in sections 1 through 4. Detailed technical requirements are described in section 5.

4. This document is applicable for certifying both Navy-operated and commercially-operated drydocking, building, transferring and launching facilities for ships; but does not necessarily reflect all of the design requirements of dry docks, vertical lifts, marine railways, building and transfer ways or launch ways that are required by new design ship specifications.

5. Certification of a facility is based upon the evaluation of the facility data provided by the operating activity. The operating activity remains solely responsible for maintaining and operating the facility in a safe manner and condition.

6. The operator will obtain certification of leased U.S. Navy dry docks prior to docking U.S. Navy ships. The Navy is not responsible for providing or preparing certification data. Certification of the dock is not required for docking non-Navy ships.

7. Training programs will ensure that dry dock personnel are adequately qualified to perform their assigned functions and that every person has a sound knowledge of how their workstation interacts with others. Training programs will also provide for qualified personnel to periodically review the responsibilities of their workstations, and for retraining or re-qualification whenever new procedures or operations are introduced.

8. Where terms are used herein such as "submitted," "submitted to the Navy," "provided to the Navy," or "made available for Navy review," the recipient is intended to be:

a. The Naval Sea Systems Command (Logistics, Maintenance, and Industrial Operations Directorate (SEA 04)) when a Navy shore or fleet activity is submitting the certification report for its own drydocking facility.

b. The cognizant Supervisor of Shipbuilding (SUPSHIP), Regional Maintenance Center (RMC), or other designated Navy representative, when a U.S. Navy contractor is submitting the certification report for its own or leased drydocking facility.

9. Comments, suggestions, or questions on this document should be addressed to Commander, Naval Sea Systems Command, ATTN: SEA 05B5, 1333 Isaac Hull Avenue, SE, Stop 5160, Washington Navy Yard DC 20376-5160 or emailed to CommandStandards@navy.mil, with the subject line "Document Comment." Since contact information can change, you may want to verify the currency of this address information using the ASSIST Online database at http://assist.daps.dla.mil.

CONTENTS

PARAGRAPH PAGE
1. SCOPE 1
1.1 Scope of the safety certification program (SCP) 1
1.1.1 Purpose 1
1.1.2 Limitations of SCP scope 1
1.2 Facilities included in SCP. 1
1.2.1 Non-permanent facilities or facilities of unusual design 1
1.2.2 Facilities located abroad 1
1.2.3 Facilities for nuclear-powered ships 1
1.3 Applicability of the SCP 1
2. APPLICABLE DOCUMENTS 1
2.1 General 1
2.2 Government documents 2
2.2.1 Other Government documents, drawings, and publications 2
2.3 Non-Government publications 2
2.4 Order of precedence 3
3. DEFINITIONS 3
3.1 Acronyms and abbreviations 3
3.1.1 CRC 3
3.1.2 DDS 3
3.1.3 FCR 3
3.1.4 FOS 3
3.1.5 GM 3
3.1.6 KG 3
3.1.7 LCB 3
3.1.8 LCG 3
3.1.9 LT 3
3.1.10 MSC 3
3.1.11 NAVFAC 3
3.1.12 NAVSEA 3
3.1.13 NDT 3
3.1.14 NSN 3
3.1.15 NSTM 3
3.1.16 RMC 3
3.1.17 SCP 3
3.1.18 SUPSHIP 3
3.1.19 UFC 3
3.1.20 VCG 3
3.2 Definitions of special terms 3
3.2.1 Baseline certification 3
3.2.2 Configuration control procedures 4
3.2.3 Control inspection 4
3.2.4 Correction of deficiencies 4
3.2.5 Deviation 4
3.2.6 Facility 4

PARAGRAPH PAGE

3.2.7 Facility operations supervisor 4
3.2.8 Fleet 4
3.2.9 Graving dock launch pontoon 4
3.2.10 Lay period 4
3.2.11 Light dock operating condition 4
3.2.12 Margin line 4
3.2.13 Operator 4
3.2.14 Preventive maintenance 4
3.2.15 Seismic hazard maps 4
3.2.16 Sill of the stern (or bow) gate of a closed-ended floating dry dock 4
3.2.17 Survey 4
3.2.18 Surveyor 4
3.2.19 Ton 4
4. GENERAL REQUIREMENTS 5
4.1 General 5
4.2 SCP overview 5
4.2.1 Certification process 5
4.2.2 Maintenance program 5
4.2.3 Key items in certification capacity, limitations, and duration 5
4.2.3.1 Certified rated capacity 5
4.2.3.2 Operational limitations for a particular ship docking, building, transferring, or launching 5
4.2.3.3 Sustaining certification 5
4.2.3.4 Certification period 5
4.2.4 Changes affecting certification status 5
4.2.4.1 Policy 5
4.2.4.2 Suspension and rescission of certification 5
4.2.4.3 Suspension of certification 5
4.2.4.3.1 Suspension of certification of a moved facility 6
4.2.4.3.2 Suspension of certification of a repaired or modified facility 6
4.2.5 Facility modifications after certification 6
4.2.6 Reporting requirements 6
4.2.7 Key personnel changes 6
4.2.8 Changes in operating procedures 7
4.2.9 Certification alteration 7
4.3 Facility certification reports 7
4.3.1 Types 7
4.3.2 Preliminary FCR 7
4.3.2.1 Purpose 7
4.3.2.2 Content 7
4.3.2.3 Format 7
4.3.3 FCR 7
4.3.3.1 Format and content 7
4.3.3.2 Responsibility 7
4.3.3.3 Preparation 7
4.3.3.4 Proprietary data 7
4.3.3.5 FCR submission 7

PARAGRAPH PAGE

4.3.3.6 Revisions 7
4.3.3.7 Retention 7
4.4 Surveys 7
4.4.1 Requirements for surveys 7
4.4.1.1 Responsibilities of the operator 8
4.4.2 Surveyor 8
4.4.2.1 Selection 8
4.4.2.2 Tasks 8
4.4.2.3 Qualifications of surveyor 8
4.4.3 Evaluation of survey results 8
4.4.3.1 Classification of items surveyed 8
4.4.3.2 Surveyor reporting responsibilities 9
4.4.4 Documentation of survey results 9
4.5 Design data and calculations 9
4.5.1 General 9
4.5.1.1 Deviations 9
4.5.2 FCR content 9
4.5.3 Seismic requirements 9
4.5.3.1 Seismic analysis 9
4.5.3.2 Design earthquake levels 10
4.5.3.3 Design performance limit states 10
4.5.4 Material strength criteria 10
4.6 Manning procedures and personnel qualification criteria 10
4.6.1 Manning procedure 10
4.6.2 Personnel qualification criteria 11
4.6.2.1 Facility operations supervisor 11
4.6.2.2 Qualifications and certification of a facility operations supervisor 11
4.6.2.3 Training requirements 11
4.7 Operating procedures 11
4.7.1 General 11
4.7.1.1 Emergency procedures 12
4.7.2 Requirements for operation 12
4.7.2.1 Certified rated capacity 12
4.7.2.2 Requirements for operational limitations and stability considerations for a particular ship 12
4.7.2.3 Planning 12
4.7.2.4 Normal operation 13
4.7.2.5 Emergency operation 13
4.7.3 Accident and incident reports 13
4.7.3.1 Requirements 13
4.7.3.2 Submission 13
4.8 Protection of a ship during the lay period 13
4.8.1 Applicability 13
4.8.2 Security patrol and fire watch during the lay period 13
4.8.3 Systems for the prevention of unauthorized operation and flooding 14
4.8.4 Disaster planning 14
4.9 Maintenance program 14

PARAGRAPH PAGE

4.9.1 Purpose 14
4.9.2 General requirements 14
4.9.3 Detailed requirements 14
4.9.3.1 Preventive maintenance 15
4.9.3.2 Control inspections 15
4.9.3.2.1 SUPSHIP/RMC oversight of commercial activity control inspections 15
4.9.3.2.2 SUPSHIP/RMC notification 16
4.9.3.3 Correction of deficiencies 16
4.9.3.4 Configuration control procedures 16
4.9.3.5 Operating procedure changes 16
4.9.3.6 Hydrographic survey 16
4.9.3.7 Fire protection system 16
4.9.4 Triennial audits 16
4.9.4.1 Overview 16
4.9.4.2 Scope 17
4.9.4.3 Maintenance program documentation 17
4.9.4.4 Evaluation of audit findings 17
5. DETAILED REQUIREMENTS 17
5.1 Floating dry docks 17
5.1.1 Facility types 17
5.1.2 Certified rated capacity 18
5.1.2.1 Blocking capacity 18
5.1.2.2 Available buoyancy 18
5.1.2.3 Stability 18
5.1.3 Design data and physical characteristics 18
5.1.3.1 FCR content 18
5.1.3.2 General description 18
5.1.3.3 Stability and buoyancy 18
5.1.3.3.1 Stability and buoyancy criteria 18
5.1.3.3.2 Design data 20
5.1.3.3.3 Present stability and buoyancy condition 20
5.1.3.4 Structure 20
5.1.3.4.1 Structural design data 20
5.1.3.4.1.1 Material strength criteria 21
5.1.3.4.1.2 Docked ship's hull girder 21
5.1.3.4.2 Evaluation of present structural condition 21
5.1.3.4.3 Structural repairs or replacements during ship lay period 21
5.1.3.5 Ballasting and deballasting systems 21
5.1.3.5.1 Ballasting and deballasting time 21
5.1.3.5.2 Arrangement 21
5.1.3.5.3 Piping systems 21
5.1.3.5.4 Reliability 21
5.1.3.5.5 Ballast and deballast control 21
5.1.3.6 Electrical power systems 22
5.1.3.6.1 Independently-powered docks 22
5.1.3.6.2 Shore-dependent docks 22

PARAGRAPH PAGE

5.1.3.6.3 Distribution 22
5.1.3.7 Indicators 22
5.1.3.7.1 Draft indicators and boards 22
5.1.3.7.2 Trim and list indicators 22
5.1.3.7.3 Ballast tank level indicators 22
5.1.3.7.4 Dry dock deflection indicators 22
5.1.3.7.5 Ballast system valve position indicators 22
5.1.3.8 Communication systems and alarms 22
5.1.3.9 Essential lighting systems 22
5.1.3.10 Mooring and anchoring 23
5.1.3.10.1 Seismic characteristics 23
5.1.3.10.2 Seismic analysis 23
5.1.3.11 Closures 23
5.1.3.12 Blocking 23
5.1.3.13 Fire protection systems 23
5.1.3.13.1 Requirements 23
5.1.3.13.1.1 Backup pumping capability 24
5.1.3.13.2 Fire stations 24
5.1.3.13.3 Liquid fuel and electrical fires 24
5.1.3.14 Ship transfer system 24
5.1.3.15 Crane securing system 24
5.1.3.16 Working plane 24
5.1.4 Operational limitations 24
5.1.5 Calculations for drydocking a particular ship 24
5.1.6 Surveys 25
5.1.6.1 Checklist 25
5.1.6.2 Light dock weight determination 25
5.1.6.3 Submergence test 25
5.1.6.4 Leakage 25
5.1.6.5 Structural survey 25
5.1.6.5.1 Underwater hull survey 25
5.1.6.5.2 Visual inspection 25
5.1.6.5.3 Gauging 25
5.1.6.5.3.1 Periodic gauging of pontoon deck 26
5.1.6.5.3.2 Periodic gauging of other dock plating 26
5.1.6.5.3.3 Periodic gauging of internal dock structure 26
5.1.6.5.3.4 Documentation and reporting of gauging results 26
5.1.6.5.4 Corrosion criteria 26
5.1.6.5.5 Temporary use of doubler plates 26
5.1.6.6 Inspection of blocking 27
5.1.6.7 Inspection of electrical and mechanical systems 27
5.1.6.7.1 Ballasting and deballasting systems and gauges 27
5.1.6.7.2 Detailed examination 27
5.1.6.7.3 Controls 27
5.1.6.7.4 Communication systems and alarms 27
5.1.6.7.5 Fire protection equipment 27

PARAGRAPH PAGE

5.1.6.7.6 Crane stops, rails, supports, and securing systems 27
5.1.6.7.7 Mooring, anchoring and translation systems 27
5.1.6.7.8 Electric power systems 27
5.1.6.7.9 Stern or bow closures 28
5.1.6.7.10 Ship positioning gear 28
5.1.6.8 Site survey 28
5.1.6.9 Hydrographic survey 28
5.1.6.10 Observation of docking or undocking operation 28
5.1.6.11 Sectional dry docks 28
5.1.7 Operating procedures 28
5.1.7.1 Detailed requirements for floating dry docks 28
5.1.7.2 Flooding precautions during the lay period 29
5.2 Graving docks 29
5.2.1 Facility types 29
5.2.2 Certified rated capacity 29
5.2.3 Design data and physical characteristics of the facility 29
5.2.3.1 FCR content 29
5.2.3.2 General description 29
5.2.3.3 Site characteristics 29
5.2.3.3.1 General geology 29
5.2.3.3.2 Soil characteristics 29
5.2.3.3.3 Results of soil surveys 29
5.2.3.3.4 Results of special geotechnical studies 29
5.2.3.3.5 Seismic characteristics 29
5.2.3.3.6 Seismic analysis 29
5.2.3.4 Structural analyses 30
5.2.3.4.1 Applied loads 30
5.2.3.4.2 General analysis methods 30
5.2.3.4.3 Dock walls 30
5.2.3.4.4 Uplift stability 31
5.2.3.5 Flooding systems 31
5.2.3.6 Dewatering and drainage systems 31
5.2.3.6.1 Water level sensing systems 31
5.2.3.6.2 Draft indicators 33
5.2.3.7 Electrical power systems 33
5.2.3.8 Flooding protection systems 33
5.2.3.8.1 Flooding protection for graving docks flooded through sluice gates 33
5.2.3.8.2 Flooding protection for graving docks flooded through the caisson 34
5.2.3.9 Fire protection systems 34
5.2.3.9.1 Requirements 34
5.2.3.9.2 Fire stations 34
5.2.3.9.3 Liquid fuel and electrical fires 35
5.2.3.10 Communication systems and alarms 35
5.2.3.11 Essential lighting systems 35
5.2.3.12 Caisson or entrance closure gate 35
5.2.3.12.1 Caisson or entrance closure gate information 35

PARAGRAPH PAGE

5.2.3.12.2 Caisson or closure gate in-place inspection, maintenance and overhaul....35
5.2.3.13 Blocking....36
5.2.3.14 Graving dock launch pontoon....36
5.2.3.14.1 Graving dock launch pontoon information....36
5.2.3.14.2 Graving dock launch pontoon structural repairs or modifications....36
5.2.4 Operational limitations....36
5.2.4.1 Pre-docking calculations....36
5.2.5 Surveys....36
5.2.5.1 Checklist....36
5.2.5.2 Observation of docking or undocking operation....36
5.2.5.3 Examination of operating logs....37
5.2.5.4 Basic dock, concrete caisson and pump house structure....37
5.2.5.4.1 Pressure relief system....37
5.2.5.4.2 Steel caisson or entrance closure gate....37
5.2.5.4.3 Caisson hull or entrance closure gate underwater survey....37
5.2.5.4.4 Periodic gauging of steel caisson or entrance closure gate plating....37
5.2.5.4.5 Periodic gauging of steel caisson or entrance closure gate structure....38
5.2.5.4.6 Periodic gauging of steel sheet pile structures....38
5.2.5.4.7 Documentation and reporting of gauging results....38
5.2.5.5 Soil borings and piezometric surveys....38
5.2.5.6 Inspection of blocking....38
5.2.5.7 Inspection of electrical and mechanical systems....38
5.2.5.7.1 Detailed examination....38
5.2.5.7.2 Controls....38
5.2.5.7.3 Fire protection equipment....38
5.2.5.7.4 Communication systems and alarms....39
5.2.5.7.5 Flooding and pumping systems....39
5.2.5.7.6 Electric power systems....39
5.2.5.7.7 Draft indicators and boards....39
5.2.5.7.8 Ship positioning gear....39
5.2.5.7.9 Ventilation systems....39
5.2.5.8 Hydrographic survey....39
5.2.6 Operating procedures....39
5.2.6.1 Detailed requirements for graving docks....39
5.2.6.2 Flooding precautions during the lay period....40
5.2.6.3 Flooding drills....40
5.3 Marine railways....40
5.3.1 Facility types....40
5.3.2 Certified rated capacity....40
5.3.3 Design data and physical characteristics of the facility....40
5.3.3.1 FCR content....40
5.3.3.2 Site characteristics....40
5.3.3.2.1 Seismic characteristics....40
5.3.3.2.2 Seismic analysis....40
5.3.3.3 General description....40
5.3.3.4 Cradle weight....40

PARAGRAPH PAGE

5.3.3.5 Stability 41
5.3.3.6 Blocking 41
5.3.3.7 Cradle structure 41
5.3.3.7.1 Structural calculations for steel structural members 41
5.3.3.8 Rollers, wheels and bearings 41
5.3.3.8.1 Draft indicators 41
5.3.3.9 Groundways structure 41
5.3.3.10 Essential lighting systems 41
5.3.3.11 Fire protection systems 41
5.3.3.11.1 Requirements 41
5.3.3.11.2 Fire stations 41
5.3.3.11.3 Liquid fuel and electrical fires 41
5.3.3.12 Inhaul chains or wire rope 42
5.3.3.13 Cradle securing method 42
5.3.3.14 Inhaul machinery 42
5.3.3.15 Electrical power systems 42
5.3.3.16 Communication systems and alarms 42
5.3.3.17 Bilge block handling systems 42
5.3.3.18 Equipment for ship handling 42
5.3.3.19 Transfer system 42
5.3.4 Operational limitations 42
5.3.5 Pre-docking calculations 42
5.3.6 Surveys 42
5.3.6.1 Checklist 42
5.3.6.2 Observation of marine railway in operation 42
5.3.6.3 Line, gauge, and grade survey 43
5.3.6.4 Structural survey 43
5.3.6.4.1 Groundways 43
5.3.6.4.2 Underwater survey and special inspection of steel cradle structure 43
5.3.6.4.3 Underwater survey and special inspection of timber cradle structure 43
5.3.6.4.4 Periodic gauging of steel cradle and cradle support structure 43
5.3.6.4.5 Periodic inspection of timber cradle and cradle support structure and gauging of steel components 44
5.3.6.4.6 Documentation and reporting of gauging results 44
5.3.6.5 Inspection of blocking 44
5.3.6.6 Inspection of electrical and mechanical systems 44
5.3.6.6.1 Wheels, rollers and roller frames 44
5.3.6.6.2 Chains and wire ropes 44
5.3.6.6.3 Hauling gear 44
5.3.6.6.4 Fire protection equipment 45
5.3.6.6.5 Block handling systems 45
5.3.6.6.6 Electric power systems 45
5.3.6.6.7 Communication systems and alarms 45
5.3.6.7 Draft boards 45
5.3.6.8 Mooring equipment and fittings 45
5.3.6.9 Hydrographic survey 45

PARAGRAPH PAGE

5.3.7 Operating procedures 45
5.3.7.1 Detailed requirements for marine railways 45
5.4 Vertical lifts 45
5.4.1 Facility types 45
5.4.2 Certified rated capacity 45
5.4.3 Design data and physical characteristics of the facility 45
5.4.3.1 FCR content 46
5.4.3.2 Site characteristics 46
5.4.3.2.1 Seismic characteristics 46
5.4.3.2.2 Seismic analysis 46
5.4.3.3 General arrangement 46
5.4.3.4 Blocking 46
5.4.3.5 Platform 46
5.4.3.5.1 Structural calculations 46
5.4.3.6 Hoists 46
5.4.3.7 Wire rope and chains 46
5.4.3.8 Braking system 46
5.4.3.9 Structure supporting hoists 46
5.4.3.10 Transfer system 46
5.4.3.11 Control systems 46
5.4.3.12 Electrical power systems 46
5.4.3.13 Communication systems and alarms 47
5.4.3.14 Essential lighting systems 47
5.4.3.15 Fire protection systems 47
5.4.3.15.1 Requirements 47
5.4.3.15.2 Fire stations 47
5.4.3.15.3 Liquid fuel and electrical fires 47
5.4.3.16 Deflection measuring system 47
5.4.3.17 Equipment for ship handling 47
5.4.4 Operational limitations 47
5.4.5 Pre-docking calculations 47
5.4.6 Surveys 47
5.4.6.1 Checklist 48
5.4.6.2 Observation of vertical lift in operation 48
5.4.6.3 Hoists 48
5.4.6.4 Platform 48
5.4.6.5 Controls 48
5.4.6.6 Inspection of blocking 48
5.4.6.7 Electrical power systems 48
5.4.6.8 Communication systems and alarms 48
5.4.6.9 Fire protection equipment 48
5.4.6.10 Deflection measuring system 48
5.4.6.11 Hydrographic survey 48
5.4.6.12 Periodic gauging of steel platform and cradle structure 49
5.4.6.12.1 Documentation and reporting of gauging results 49
5.4.7 Operating procedures 49

PARAGRAPH PAGE

5.4.7.1 Detailed requirements for operating vertical lifts 49
5.5 Transfer and launch ways 49
5.5.1 Facility types 49
5.5.2 Certified rated capacity 49
5.5.3 Design data and physical characteristics of the facility 49
5.5.3.1 FCR content 49
5.5.3.2 General description 50
5.5.3.3 Site characteristics 50
5.5.3.3.1 General geology 50
5.5.3.3.2 Soil characteristics 50
5.5.3.3.3 Results of special geotechnical studies 50
5.5.3.3.4 Seismic characteristics 50
5.5.3.3.5 Seismic analysis 50
5.5.3.4 Structural analyses 50
5.5.3.4.1 Loads 50
5.5.3.4.2 Properties of structural materials 50
5.5.3.4.3 Acceptance criteria 50
5.5.3.5 Keel tracks, transfer rails, blocks and bilge cribbing 50
5.5.3.6 Ground ways and launch ways 50
5.5.3.6.1 Transfer rails 50
5.5.3.7 Release mechanisms 51
5.5.3.8 Equipment for ship and module transfer 51
5.5.3.9 Fire protection systems 51
5.5.3.9.1 Requirements 51
5.5.3.9.2 Fire stations 51
5.5.3.9.3 Liquid fuel and electrical fires 51
5.5.3.10 Communication systems and alarms 51
5.5.3.11 Essential lighting systems 51
5.5.3.12 Electrical power systems 51
5.5.3.13 Drainage system 51
5.5.3.14 Dry dock landing grid 51
5.5.4 Operational limitations 51
5.5.5 Pre-transfer calculation 52
5.5.6 Surveys 52
5.5.6.1 Checklist 52
5.5.6.2 Observation of launching or transfer 52
5.5.6.3 Structural survey 52
5.5.6.3.1 Slabs 52
5.5.6.3.2 Tracks 52
5.5.6.3.3 Inspection of blocking 52
5.5.6.3.4 Survey of dry dock landing grid 52
5.5.6.4 Survey of electrical and mechanical systems 52
5.5.6.4.1 Detailed examination 52
5.5.6.4.2 Fire protection equipment 52
5.5.6.4.3 Communication systems and alarms 52
5.5.6.4.4 Electric power systems 52

PARAGRAPH PAGE

5.5.6.4.5 Transfer systems 52
5.5.6.4.6 Launching mechanism 52
5.5.6.5 Hydrographic survey 52
5.5.6.6 Periodic gauging of steel sheet pile structures 53
5.5.6.7 Documentation and reporting of gauging results 53
5.5.7 Operating procedures 53
6. NOTES 53
6.1 Intended use 53
6.2 Acquisition requirements 53
6.3 Guidance documents 53
6.4 FCR submission 55
6.5 Subject term (key word) listing 55
6.6 Changes from previous issue 55

FIGURES PAGE

1. Sample facility operations supervisor certificate 56
2. Minimum pontoon freeboard versus rated lifting capacity for floating dry docks and graving dock launch pontoons 57
3. Phases in the docking evolution for stability calculations for floating dry docks 58
4. Minimum GM versus certified capacity of floating dry docks 59
5. Sail area moment due to the ship and floating dry dock used for heeling arm due to wind calculation 60
6. Ballast distribution for lifting floating dock without ship 61
7. Limiting curve of ship's adjusted VCG versus lifting capacity for floating dry docks 62
8. Ship's adjusted VCG 63
9. Floating dry dock lifting capacity variation with ship location 64
10. Example of two independent power sources for water level sensing systems and alarms for graving docks 65
11. Example of single power source with battery backup for water level sensing systems and alarms for graving docks 66
12. Forces on cradle during docking for marine railways 67
A-1. Facility certification report contents 70
A-2. Sample cover sheet for FCRs 71
A-3. Sample cover letter for a Navy operated facility 72
A-4. Sample cover letter for a commercially operated facility 73
A-5. Sample proprietary data list 74
A-6. Sample of surveyor's endorsement 75
A-7. Sample list of revised pages 76
D-1. Distribution of ship weight by trapezoidal loading conditions 83

APPENDIX PAGE

A FORMAT AND CONTENTS OF THE FACILITY CERTIFICATION REPORT (FCR) 68
B SUMMARY OF STEPS LEADING TO FACILITY CERTIFICATION 77
C FACILITY OPERATIONS SUPERVISOR QUALIFICATIONS DOCUMENTATION 79
D PUMPING PLAN FOR FLOATING DRY DOCKS 81
E INSPECTION CHECKLIST FOR FLOATING DRY DOCKS 84

APPENDIX PAGE

F INSPECTION CHECKLIST FOR GRAVING DOCKS 92
G INSPECTION CHECKLIST FOR MARINE RAILWAYS 110
H INSPECTION CHECKLIST FOR VERTICAL LIFTS 115
I INSPECTION CHECKLIST FOR TRANSFER AND LAUNCH WAYS 120
J ACCIDENT AND INCIDENT REPORT FORM 124
K BLOCK RATING CRITERIA 128

1. SCOPE

1.1 Scope of the safety certification program (SCP). The scope of the SCP is as follows:

1.1.1 Purpose. The purpose of the SCP is to ensure the safety of U.S. Navy ships during docking and undocking operations, while in dock, while under construction, and during launching and transfer operations. The designed capacity of the drydocking facility is to be determined, as well as its current material condition with regard to its foundations, structure, and supporting auxiliary systems, including those for ship protection. Also included is an assessment of operating procedures, manning and personnel qualification procedures, and maintenance procedures supporting operational reliability.

1.1.2 Limitations of SCP scope. There are many applicable federal and state laws, as well as ordinances and regulations; compliance in these areas may be under the cognizance of other Government agencies. The scope of the SCP excludes the following:

a. Personnel safety. Requirements of agencies, such as the Occupational Safety and Health Administration (OSHA). Radiological controls are to be implemented using separate programmatic requirements.

b. Mechanical handling system. Safety requirements in the design and operation of equipment such as cranes.

c. Service systems. Facility subsystems that are installed solely to provide habitability and housekeeping services to the ship, such as potable water and steam for heating and galley. The facility subsystems, such as raw and salt water and compressed air, are included in the scope of the SCP to the extent that they support ship protection systems.

d. Industrial systems. Systems used in industrial services, such as welding or abrasive blasting.

e. Labor and environment. All labor and environmental issues, such as those required by the Department of Labor and the Environmental Protection Agency, including hazardous material issues and pollution control systems.

1.2 Facilities included in SCP. Floating dry docks, graving docks, marine railways, vertical lifts, launch ways, and transfer ways are included in the SCP.

1.2.1 Non-permanent facilities or facilities of unusual design. Non-permanent facilities or facilities of unusual design used for performing functions similar to those of the facilities referenced in 1.2 are also covered by the SCP. The process leading to certification of non-permanent facilities or unusual facilities will normally be conducted more expeditiously and economically by submission and review of a preliminary facility certification report (FCR), as indicated in 4.3.2.

1.2.2 Facilities located abroad. Facilities located outside the U.S. are included in the SCP only if they are operated by the U.S. Navy.

1.2.3 Facilities for nuclear-powered ships. This document applies to the drydocking of all U.S. Navy ships. Additional requirements that apply solely to drydocking nuclear-powered ships will be invoked by the Navy to supplement these requirements.

1.3 Applicability of the SCP. The SCP is applicable to evolutions involving U.S. Navy ships as defined by the Naval Vessel Register (http://www.nvr.navy.mil) under the status categories of Active, Under Construction, and Naval Reserve Force, Active, and is also applicable to Military Sealift Command (MSC) ships under construction. This standard may be invoked for other ships, service craft, and small boats on a case basis when it is determined to be in the best interest of the Navy.

2. APPLICABLE DOCUMENTS

2.1 General. The documents listed in this section are specified in sections 3, 4, or 5 of this standard. This section does not include documents cited in other sections of this standard or recommended for additional information or as examples. While every effort has been made to ensure the completeness of this list, document users are cautioned that they must meet all specified requirements of documents cited in sections 3, 4, or 5 of this standard, whether or not they are listed.

2.2 Government documents.

2.2.1 Other Government documents, drawings, and publications. The following other Government documents, drawings, and publications form a part of this document to the extent specified herein. Unless otherwise specified, the issues of these documents are those cited in the solicitation or contract.

NAVAL FACILITIES ENGINEERING COMMAND (NAVFAC)

NAVFAC P-307 - Management of Weight Handling Equipment

(Copies of this document are available from the Naval Facilities Engineering Command, 1322 Patterson Avenue, SE, Suite 1000, Washington Navy Yard, DC 20374-5065 or online at http://www.navfac.navy.mil.)

UFC 4-152-01 - Design: Piers and Wharves

(Copies of this document are available from The Whole Building Design Guide, National Institute of Building Sciences (NIBS), 1090 Vermont Avenue, NW, Suite 700, Washington, DC 20005 or online at http://www.wbdg.org/index.php.)

NAVAL SEA SYSTEMS COMMAND (NAVSEA)

NAVSEA Instruction 9997.3 - Docking Officer Minimum Qualification Requirements

S9086-C6-STM-010/CH096 - NSTM Chapter 096, Weights and Stability

S9086-7G-STM-010/CH997 - Docking Instructions and Routine Work in Dry Dock

(Copies of these documents are available from the Naval Logistics Library, 5450 Carlisle Pike, Mechanicsburg, PA 17055 or online at http://nll.ahf.nmci.navy.mil.)

2.3 Non-Government publications. The following documents form a part of this document to the extent specified herein. Unless otherwise specified, the issues of these documents are those cited in the solicitation or contract.

AMERICAN CONCRETE INSTITUTE

ACI-318 - Building Code Requirements for Structural Concrete and Commentary

(Copies of this document are available from the American Concrete Institute, 38800 Country Club Dr., Farmington Hills, MI 48331 or online at http://www.concrete.org/general/home.asp.)

AMERICAN FOREST AND PAPER ASSOCIATION

ANSI/AF&PA NDS - National Design Specification (NDS) for Wood Construction

(Copies of this document are available from the American Wood Council, 1111 Nineteenth Street, NW, Suite 800, Washington, DC 20036 or online at http://www.awc.org.)

AMERICAN INSTITUTE OF STEEL CONSTRUCTION

AISC 325 - Steel Construction Manual

(Copies of this document are available from the American Institute of Steel Construction, One East Wacker Drive, Suite 700, Chicago, IL 60601-1802 or online at http://www.aisc.org.)

AMERICAN SOCIETY OF CIVIL ENGINEERS

ASCE-7 - Minimum Design Loads for Buildings and Other Structures

(Copies of this document are available from the American Society of Civil Engineers, 1801 Alexander Bell Drive, Reston, VA 20191 or online at http://www.asce.org/asce.cfm.)

INTERNATIONAL CODE COUNCIL

International Building Code

(Copies of this document are available from the International Code Council, 500 New Jersey Avenue, NW, 6th Floor, Washington, DC 20001-2070 or online at http://www.iccsafe.org/.)

2.4 Order of precedence. Unless otherwise noted herein or in the contract, in the event of a conflict between the text of this document and the references cited herein, the text of this document takes precedence. Nothing in this document, however, supersedes applicable laws and regulations unless a specific exemption has been obtained.

3. DEFINITIONS

3.1 Acronyms and abbreviations. The acronyms and abbreviations listed in this standard are defined as follows:

3.1.1 CRC. Certified Rated Capacity

3.1.2 DDS. Design Data Sheet

3.1.3 FCR. Facility Certification Report

3.1.4 FOS. Facility Operations Supervisor

3.1.5 GM. Metacentric Height

3.1.6 KG. Height of the Center of Gravity above the Keel

3.1.7 LCB. Longitudinal Center of Buoyancy

3.1.8 LCG. Longitudinal Center of Gravity

3.1.9 LT. Long Ton (2240 lbs)

3.1.10 MSC. Military Sealift Command

3.1.11 NAVFAC. Naval Facilities Engineering Command

3.1.12 NAVSEA. Naval Sea Systems Command (NAVSEA 04, Logistics, Maintenance, and Industrial Operations Directorate)

3.1.13 NDT. Non-Destructive Testing

3.1.14 NSN. National Stock Number

3.1.15 NSTM. Naval Ships' Technical Manual

3.1.16 RMC. Regional Maintenance Center

3.1.17 SCP. Safety Certification Program

3.1.18 SUPSHIP. Supervisor of Shipbuilding, Conversion, and Repair

3.1.19 UFC. Unified Facilities Criteria

3.1.20 VCG. Vertical Center of Gravity

3.2 Definitions of special terms. The following terms are used in this standard:

3.2.1 Baseline certification. The certification for a facility is granted based on a report that includes design data, system descriptions, material condition, operating procedures, maintenance procedures, and other documentation. This documentation establishes the baseline certification for the facility.

3.2.2 Configuration control procedures. The procedures used to systematically evaluate, coordinate, approve (or disapprove), and accomplish changes after the baseline certification.

3.2.3 Control inspection. An inspection comprised of planned and scheduled examinations and tests to determine the condition of a facility and its equipment with respect to its ability to perform all functions for which it was designed and to determine the need for repairs, alterations, or changes to ensure the material readiness of a facility to carry out its designed functions and evaluate the effectiveness of the maintenance program.

3.2.4 Correction of deficiencies. The act of restoring a facility to its original baseline or design function, capacity, and efficiency by repair, overhaul, replacement, or alteration.

3.2.5 Deviation. The departure from a specific requirement of this standard when adequate compensating features, as determined by the U.S. Navy, are provided in lieu of meeting the requirement.

3.2.6 Facility. A physical plant for drydocking, building, launching, or transferring ships.

3.2.7 Facility operations supervisor. A designated dockmaster, docking officer, launching superintendent, or other title used to indicate an individual responsible for supervising the operations of a facility covered by this standard.

3.2.8 Fleet. A ship is floated and re-landed without leaving a facility for purposes of docking or undocking other vessels or for shifting the position of the ship on the blocks for underbody coating system application or other production work.

3.2.9 Graving dock launch pontoon. A pontoon used to launch or lift a vessel that is captive in a graving dock and never leaves this protective location.

3.2.10 Lay period. The period between the docking and undocking evolution, during which a ship is in the facility.

3.2.11 Light dock operating condition. The condition for a floating dry dock when the dock has all of the ballast tanks pumped down to the residual water level. The dock weight in this condition includes the weight of the keel and bilge blocking system up to a horizontal plane formed by the top of the keel blocks at the standard height used for the maximum ship intact stability calculations.

3.2.12 Margin line. A line 3 inches below the top wingwall deck or the lowest non-watertight wingwall penetration of a floating dry dock, defining the highest permissible location of any waterplane in the final condition of sinkage, trim, and heel following damage.

3.2.13 Operator. A commercial activity, naval shipyard, or naval activity which operates a facility and applies for certification.

3.2.14 Preventive maintenance. Maintenance consisting of periodic examination, lubrication, minor adjustment, and minor repair of items to ensure the continuous operation and safety of a facility and its equipment.

3.2.15 Seismic hazard maps. Maps produced by the U.S. Geological Survey and the Building Seismic Safety Council (BSSC) of the National Institute of Building Sciences (NIBS) that shows Maximum Considered Earthquake (MCE) for ground motion with a 2 percent probability of exceedance in 50 years. These maps are available online at: http://earthquake.usgs.gov/research/hazmaps/.

3.2.16 Sill of the stern (or bow) gate of a closed-ended floating dry dock. The sill of a gate is the upper surface of the dock structure against which the bottom of the gate makes contact.

3.2.17 Survey. The thorough evaluation of the material condition and operational capability of a facility.

3.2.18 Surveyor. The engineering firm or classification society selected by an operator to perform surveys, tests, and trials of the facility.

3.2.19 Ton. The weight unit used interchangeably with long ton (LT) in the field of naval architecture; equal to 2,240 pounds.

4. GENERAL REQUIREMENTS

4.1 General. This section provides an overview of the SCP general requirements for certification of drydocking facilities and building ways, as well as operation of certified facilities.

4.2 SCP overview. The SCP is described in 4.2.1 through 4.2.9.

4.2.1 Certification process. The certification process is initiated by submission of an FCR to the Navy by an operator. Based on an evaluation of the data submitted and an on-site pre-certification inspection including operational tests, the Navy decides whether or not to certify the facility and so advises the operator. Requirements for the format and contents of an FCR are described in Appendix A. These requirements include historical data, design data, maintenance procedures, manning and operating procedures, material condition survey results, and proposed repairs. If the Navy's pre-certification inspection and review of the FCR supports certification, a facility certification will be issued stating the maximum docking capacity for which the facility is certified, loading limitations, duration of the certification period and the conditions for sustaining certification.

4.2.2 Maintenance program. All activities shall implement a maintenance program prepared in accordance with 4.9 and shall demonstrate during Navy audits that the facility is properly maintained and operated.

4.2.3 Key items in certification capacity, limitations, and duration. Capacity, limitations, and duration shall be as follows:

4.2.3.1 Certified rated capacity. This capacity is the maximum allowable displacement for a Navy ship on a certified facility. Facilities shall be described by total displacement in long tons, and by allowable line loading, such as tons per unit length, or area loading, such as tons per square foot.

4.2.3.2 Operational limitations for a particular ship docking, building, transferring, or launching. In conjunction with the CRC, the Navy may impose additional operational limitations on a certified facility to ensure the safety of the ship.

4.2.3.3 Sustaining certification. All activities shall implement a maintenance program in accordance with 4.9. The activity shall demonstrate that the facility is satisfactory to sustain certification during Navy maintenance audits and inspections. The Navy may require certain facility repairs or modifications to be completed within a specified time frame as a condition for sustaining certification. The Navy retains the right to inspect the facility at any time.

4.2.3.4 Certification period. The certification period is the duration for which certification remains valid.

4.2.4 Changes affecting certification status. Changes affecting certification status are as follows:

4.2.4.1 Policy. The Navy reserves the right to suspend or cancel a facility's certification or to alter it by revising items listed in 4.2.3.1 through 4.2.3.4 under any one of the following conditions:

a. The facility is damaged or significantly altered to such an extent that safety is impaired or the physical dimensions are modified.

b. New information emerges that shows that the facility is unsafe.

c. Conditions described in 4.2.3.1 through 4.2.3.3 are violated.

d. Manning or operating procedures specified in the approved FCR are violated.

e. The reporting requirements of 4.2.6 are not met.

f. A qualified Facility Operations Supervisor is not available, see 4.2.7.

4.2.4.2 Suspension and rescission of certification. Suspension is a temporary revocation of certification; rescission is a final revocation of certification. The Navy will advise a facility operator if it determines that there is cause to suspend or rescind certification. Certification will be rescinded when the operator fails to comply with certification requirements for a period of more than a year following suspension of certification. After certification is rescinded, reinstatement of certification will require the submission of a new FCR.

4.2.4.3 Suspension of certification. Certification will be suspended if a facility is moved from the site where it was originally certified or if it undergoes major repairs or modifications.

4.2.4.3.1 Suspension of certification of a moved facility. If a facility is moved from its certified site, it will be suspended from the time it is moved until it is relocated to a site that has been approved by the Navy. The following shall apply:

a. If a facility is moved and is returned to its approved site, a post-transit hull inspection shall be conducted, with the results submitted to the Navy for review and approval. In addition, an operational test witnessed by the Navy, including a submergence test to the maximum dock draft, shall be conducted prior to reinstatement of certification.

b. If a facility is relocated to a new site, certification data for the new site shall be submitted to the Navy for approval prior to reinstatement of certification. This data shall include the following: a post-transit hull inspection, an operational test including a submergence test to the maximum dock draft and a revision to the FCR. Examples that require a revision to the FCR include, but are not limited to, changes in manning procedures and personnel qualification criteria, operating procedures, protection of a ship during the lay period, electrical power systems, communications systems and alarms, mooring and anchoring, fire protection systems, and hydrographic survey.

4.2.4.3.2 Suspension of certification of a repaired or modified facility. Certification will be suspended from the commencement of a major repair or modification until Navy approval of a post-repair report. A major repair consists of repairs to the extent that a facility will be out of operation for over 90 calendar days. A major modification consists of altering the baseline certification to such an extent that the certified capacity is changed or the physical dimensions of the facility are modified. A post-repair report shall be submitted to the Navy for approval and shall confirm the following:

a. The material condition is satisfactory to drydock ships within the certification limitations.

b. The personnel qualification procedures and manning procedures are adequate and the assigned personnel are trained.

c. The operating procedures are valid.

d. The methods and procedures for protection of a ship during the lay period are current and adequate.

4.2.5 Facility modifications after certification. If an operator modifies a facility, the following shall be submitted for Navy approval:

a. A design change report approved by the Configuration Control Board that includes a description of the proposed change, updated design calculations including wastage criteria for steel structure, a schedule for completion of the modification, and the effect of this change on the facility's capacity. The design change report shall be approved by the Navy prior to the operator implementing the change. An independent survey of the modifications may be required.

b. A revision to the FCR after completion of the modification containing updated design data, the new capacity of the facility, revised manning, operational limitations, and operating procedures (as appropriate).

4.2.6 Reporting requirements. The operator of a certified facility shall make a report to the Navy if:

a. The facility is modified to the extent that the basic design or capacity is changed (4.2.5).

b. Key personnel changes occur (4.2.7).

c. The operating procedures are modified or the manning is revised (4.2.8).

d. The operator drydocks a non-Navy vessel that exceeds the facility's certified line load (4.7.2.1).

e. An accident or incident occurs (4.7.3).

4.2.7 Key personnel changes. The operator shall report key personnel changes to the Navy within 10 working days, prior to any dockings or immediately when there is a Navy ship in dock, or when there is a change of status of any individual to whom a facility operations supervisor certificate has been issued. If a qualified facility operations supervisor is no longer employed by the activity, capable, or available to dock U.S. Navy ships, certification of the facility will be suspended automatically until the Navy has reviewed and approved the qualifications of a new facility operations supervisor in accordance with Appendix C and 4.6.2.2.

4.2.8 Changes in operating procedures. Changes in operating procedures (other than administrative) shall be approved by the activity's configuration control board and provided to the Navy for review and approval before the changes are put into effect for docking a Navy ship. Changed operating procedures shall contain a revision record sheet as shown on figure A-7.

4.2.9 Certification alteration. After reviewing any change report, the Navy may alter or suspend certification as indicated in 4.2.4.

4.3 Facility certification reports. FCRs shall be as described in 4.3.1 through 4.3.3.7.

4.3.1 Types. There are two types of FCRs:

a. A preliminary FCR as defined in 4.3.2.

b. An FCR submitted for certification of a facility.

4.3.2 Preliminary FCR. A preliminary FCR shall be as described in 4.3.2.1 through 4.3.2.3:

4.3.2.1 Purpose. A preliminary FCR may be submitted to obtain concurrence from the Navy on certification requirements proposed by the operator for certification of nonpermanent facilities, facilities under construction, or facilities of unusual design. A preliminary FCR may also be submitted to obtain a ruling from the Navy on requested deviations that the operator considers necessary and justified as specified in 4.3.2.2. Additionally, a preliminary FCR may be submitted for guidance from the Navy on the contents of the design data package to be generated and included in the FCR when a significant portion of the facility's original design data is missing.

4.3.2.2 Content. The preliminary FCR shall be written in the form of a concise self-contained proposal, providing the necessary background information and justification for the proposed requirement changes and FCR content. The initial submittal of the document to the Navy shall be as complete as possible in order to keep the time required for a complete review to a minimum. In the case of nonpermanent facilities or facilities with unusual design, the operator shall propose certification criteria that reflect the special design and operating conditions of the facility. If deviations are requested, the operator shall demonstrate in the preliminary FCR the necessity for the deviation, shall thoroughly describe compensating design and operating features, and shall demonstrate that safety will be preserved.

4.3.2.3 Format. For format requirements, see Appendix A.

4.3.3 FCR. The FCR shall be as described in 4.3.3.1 through 4.3.3.7:

4.3.3.1 Format and content. Format and content requirements are described in Appendix A.

4.3.3.2 Responsibility. The operator is responsible for the preparation and accuracy of the FCR.

4.3.3.3 Preparation. Typical steps leading to certification are described in Appendix B.

4.3.3.4 Proprietary data. Data submitted by a contractor solely for Government use in the certification review shall not be made available to anyone else not having a legitimate interest.

4.3.3.5 FCR submission. FCRs shall be submitted as specified (see 6.2).

4.3.3.6 Revisions. The operator is required to respond to Navy requests for additional data during FCR review. Additional data shall be submitted to the Navy in a form that can be inserted into the FCR and shall include a list of revised pages as described in Appendix A.

4.3.3.7 Retention. A copy of the FCR shall be retained at the facility at all times and shall be available for use by the facility operations supervisor, other personnel, and Navy inspectors.

4.4 Surveys. Surveys shall be conducted in accordance with 4.4.1 through 4.4.4.

4.4.1 Requirements for surveys. The survey requirements shall include:

a. Surveys of structural components, including soil and foundations, where necessary. The acceptance criteria for corroded steel structure shall be established in accordance with 4.5.2c.

b. Hydrographic surveys conducted within one year of submittal of FCR.

c. Surveys of site characteristics and land-based support systems for electrical power supply and fire protection.

d. Tests and component surveys of:

(1) Electrical and mechanical systems including pumps, valve mechanisms, closures, and ship handling equipment.

(2) Control systems including gauges, indicators, alarms, and communication systems.

(3) Ship transfer systems.

e. Observation of the facility in operation during docking, undocking, launching, or ship transfer.

4.4.1.1 Responsibilities of the operator. The operator shall be responsible for:

a. Preparing and making available all spaces to be inspected to enable the survey team to carry out its task efficiently and safely. For floating dry docks, regardless of the size, bottom plating in every ballast tank and buoyancy chamber shall be exposed for thorough visual inspection and NDT thickness measurement.

b. Including the survey report in the initial FCR submittal, the maximum allowable time period between the survey and the issue date of certification shall be 2 years.

4.4.2 Surveyor. Requirements for the surveyor shall be as follows:

4.4.2.1 Selection. The facility operator shall choose an engineering firm or classification society (hereinafter referred to as the "surveyor") to conduct surveys. If an engineering firm is chosen, the firm and its personnel shall be unaffiliated with the facility operator.

4.4.2.2 Tasks. The surveyor's tasks are summarized in Appendix B. In addition to conducting surveys, the surveyor shall be responsible for:

a. Evaluating the results of surveys.

b. Recommending corrective actions.

c. Recommending a Certified Rated Capacity.

4.4.2.3 Qualifications of surveyor. The qualifications of the surveyor and the members of the survey team shall be stated in the FCR. An individual team member surveying a floating dry dock shall have experience in the design and operation of floating dry docks or in ship surveying. An individual team member surveying a graving dock, marine railway, vertical lift, transfer way, or launch way shall have experience in the design, operation, or surveying of that type of facility or similar type of structure. An individual with experience in soil mechanics shall be a member of a team surveying a graving dock. An individual team member for the underwater portion of the survey shall have experience in at least two of the following areas: underwater salvage work, ship surveying, and underwater maintenance and repair of materials appropriate to the facility. A diver meeting the requirements of a recognized classification society for similar underwater inspection shall be considered to be qualified to perform the underwater portion of the survey. The team shall be comprised of at least one member with experience in at least two of the previously mentioned appropriate areas. The surveyor shall be experienced, qualified, staffed, and equipped to perform tasks described in 4.4.2.2 on facilities of the type to be surveyed. The surveyor may use services of subcontractors specializing in areas such as soil mechanics or underwater surveys. Qualifications of any subcontractor utilized shall be listed in the FCR.

4.4.3 Evaluation of survey results. Survey reports shall be evaluated as follows:

4.4.3.1 Classification of items surveyed. The results of a facility survey shall appear in Enclosure VIII (see A.3.5.8 of Appendix A) of the FCR. Each item listed therein shall be given a classification rating. The items surveyed shall be classified as follows:

a. Satisfactory. The condition of the item will not result in system damage and, based on measured or estimated deterioration rate, it may be expected to remain satisfactory during the specified certification period.

b. Unsatisfactory. The condition of the item may cause system damage or loss and shall be corrected, repaired, or replaced prior to handling a Navy ship in the facility.

c. Marginal. The condition of the item will not result in major damage nor, by itself, will it make the facility unsafe to dock a ship of the Certified Rated Capacity, provided it is corrected, repaired, or replaced during the certification period in a timely manner. A number of such items as a group can make the facility unsafe.

4.4.3.2 Surveyor reporting responsibilities. The surveyor shall provide a descriptive comment regarding items classified as marginal or unsatisfactory. The surveyor's recommendations for corrective action regarding each of these items and the CRC shall be provided. The surveyor's reports shall also include a list of major equipment that was inoperative at the time of the survey. All survey reports shall contain an executive summary of key points and a summary evaluation of the material condition of the dock and a statement indicating whether the facility is considered safe or unsafe to dock ships of the recommended CRC. In making this determination, items having a material rating of marginal shall be considered as a group to determine if, collectively, the items constitute an unsafe condition. The material condition of a facility shall not be evaluated as safe or satisfactory if any unsatisfactory items appear in the inspection checklists.

4.4.4 Documentation of survey results. Survey results shall be documented as indicated in Appendix A.

4.5 Design data and calculations. Design data and calculations shall be in accordance with 4.5.1 and 4.5.2. Calculations shall be presented in a neat manner, shall demonstrate generally accepted engineering methodology and level of detail, and shall include assumptions, approach, statement of formulas or theoretical basis, assignment of symbols, citation of data sources, and step-by-step calculations. Locally produced (non-commercial) computer-aided methodologies, including spreadsheet versions of accepted manual methodologies, shall demonstrate validation. Calculations which include computer analysis programs shall have explanations of input and output data which includes sketches or diagrams of computer models showing elements and node numbering, loading, and restraint data. An executive summary of key points shall be provided.

4.5.1 General. Detailed requirements are specified as follows:

a.	Floating dry docks	5.1
b.	Graving docks	5.2
c.	Marine railways	5.3
d.	Vertical lifts	5.4
e.	Transfer and launch ways	5.5

4.5.1.1 Deviations. Deviations from the criteria set forth in this document will be considered on a case basis. If deviations are requested, justification shall be provided that includes compensating features ensuring that safety will be preserved. Deviations will be re-evaluated during each Navy on-site audit.

4.5.2 FCR content. Design data and calculations submitted for certification shall be as indicated in Appendix A and shall include the following:

a. A general description and history of the facility.

b. Drawings, sketches, descriptions, and calculations that describe the facility shall be included as enclosures. The scope of the data depends upon the requirements of 5.1, 5.2, 5.3, 5.4, or 5.5 (as applicable) and evaluation of survey results as specified in 4.4.3.

c. Structural calculations shall be provided. Allowable wastage for steel plating and structural members from original design shall be included in the calculations. The amount of reduction in thickness shall define the repair criteria for the steel structure. Calculations for local strength shall also consider non-uniform wastage such as deck or bulkhead plating reduced in thickness with the stiffening and framing at full thickness and vice versa. Calculations shall show allowable stresses are not exceeded.

4.5.3 Seismic requirements.

4.5.3.1 Seismic analysis. A new seismic analysis is required for the following facilities:

a. Existing U.S. Navy and commercially operated activities with floating docks, graving docks, and transfer and launch ways that are capable of drydocking, transferring, and launching nuclear powered ships.

b. All floating docks, graving docks, and transfer and launch ways structures that apply for certification after the effective date of this document.

c. Existing floating docks, graving docks, and transfer and launch ways structures modified after the effective date of this document.

d. If it is determined that the existing or modified structure does not meet the seismic requirements specified herein, the seismic acceleration that the existing or modified structure can withstand shall be determined and reported to NAVSEA, along with a plan describing the structural modifications that would be required in order to fully comply with the seismic provisions.

4.5.3.2 Design earthquake levels. Seismic analysis for drydocking facilities and ship transfer and launch ways shall be based on both of the following design earthquake levels:

a. Level 1. An earthquake with a 10 percent probability of exceedance in 50 years exposure. This event has a return time of 475 years and is considered a major event.

b. Level 2. An earthquake with a 2 percent probability of exceedance in 50 years exposure. This event has a return time of 2373 years and is considered a very rare event.

4.5.3.3 Design performance limit states. All structures and their foundations shall be capable of resisting design earthquake levels as follows:

a. Level 1. No damage requiring post earthquake remedial action.

b. Level 2. No collapse with repairable damage, while maintaining the safety of any ship in the facility during the earthquake. Repairable damage to structure and/or foundation, and limited permanent deformation are expected under this level of earthquake. The facility shall remain operational such that a ship in dock during an earthquake could be safely undocked after the earthquake, but prior to repairing the facility.

4.5.4 Material strength criteria. The design and analysis of structural members shall be in accordance with an approved industry standard applicable to the material being considered. Allowable Stress Design (ASD) or Load and Resistance Factor Design (LRFD) (also referred to as strength design) may be used for design and analysis. The following are examples of approved industry standards for common structural materials:

a. Steel – American Institute of Steel Construction, AISC 325, Manual of Steel Construction.

b. Concrete – American Concrete Institute, ACI-318, Building Code Requirements for Structural Concrete.

c. Timber – American Forest and Paper Association, ANSI/AF&PA NDS, National Design Specification (NDS) for Wood Construction.

The current edition or revision of the applicable standard shall be used. Load combinations shall be in accordance with the applicable material standard or other building code such as American Society of Civil Engineers, ASCE-7 or the International Building Code, IBC. The load combinations shall be modified as required to ensure that all of the loads for the various drydocking facilities are included. Load combinations shall be applied to produce the most unfavorable loading conditions possible.

4.6 Manning procedures and personnel qualification criteria. Manning procedures and personnel qualification criteria shall be in accordance with 4.6.1 through 4.6.2.3.

4.6.1 Manning procedure. A manning procedure shall be prepared for the facility. The procedure shall be available to the facility operations supervisor and shall describe the stations to be manned, the functions to be performed, and the qualification criteria for personnel manning those stations during all operations. The procedure shall include personnel required for casualties described in 4.7.1.1.

4.6.2 Personnel qualification criteria. The operator shall ensure that personnel are qualified through training and experience. The operator shall provide the qualification criteria required for an individual to man the stations described in the procedure required by 4.6.1 including the person(s) responsible for certifying that the individual is qualified. As an alternative qualification method, an operator may provide documented qualification criteria by referencing recognized standards, such as personnel qualification standards in the case of Navy operators. Personnel qualification and training shall be documented and recorded to reflect completeness of all requirements. These records, including the periodic re-training of qualified personnel, shall be maintained in a condition that can be easily audited. Personnel who qualify individuals must be trained to evaluate and certify the abilities of the operator.

4.6.2.1 Facility operations supervisor. Each operator shall designate at least one facility operations supervisor who is qualified to conduct docking, transfer, or launching operations as applicable on each facility for which certification is requested. The facility operations supervisor shall be at the facility or available for immediate recall within one hour by automobile while a Navy ship is in the facility. This recall requirement does not apply to building ways or transfer facilities when the ship is on the land level ground ways and is not susceptible to an unplanned float off.

4.6.2.2 Qualifications and certification of a facility operations supervisor. A facility operations supervisor shall be professionally qualified through training and experience to conduct all evolutions in a safe, proper, and reliable manner. Navy docking officers shall be qualified in accordance with NAVSEA Instruction 9997.3. A commercial operator shall provide a certificate of qualification and designation for each facility operations supervisor for review and approval by the Navy. The facility operations supervisor certificate, which meets the requirements of Appendix C, and is approved by the operator's top management, provides the means for making the operator's facility operations supervisor qualification a matter of record. A sample form for a commercial facility operations supervisor certification is shown on figure 1. In addition to the certificate of qualification, the operator shall provide a résumé of the training and qualifications for each individual designated as a commercial facility operations supervisor. An outline for the requirements of a commercial facility operations supervisor is presented in Appendix C.

4.6.2.3 Training requirements. Training for facility operations supervisors, docking officers, and docking observers shall include satisfactory completion of the NAVSEA Dry Dock Safety and Certification Program Course exam. Course and exam are available from NAVSEA headquarters.

4.7 Operating procedures. Operating procedures shall be in accordance with 4.7.1 through 4.7.3.2.

4.7.1 General. Complete operating procedures for the facility shall be prepared and included in the FCR. These procedures, or related portions thereof, shall be available at the appropriate stations and to the facility operations supervisor. Typical requirements for these procedures are as follows:

a. Procedures for operating the facility shall be prepared and made available in writing to the facility operations supervisor. They shall include a plan for operation and shall assign responsibilities for each phase of the operation.

b. Facility operating procedures shall be in step-by-step detail. These procedures shall include checklists for use in prerequisite status checks of dock systems before facility operations are initiated. Additionally, formal prerequisite checks are required for critical ship interface items, such as underwater appendages and hull fittings. Checklists shall also be used to ensure that facility systems are properly secured and that ship protection systems are prepared for the ship's lay period.

c. The requirement for independent verification (two signatures required) shall be included for critical steps in the operating procedures and prerequisite checklists for docking, undocking, transferring, or launching operations.

d. Calculations of ship line loads and ship stability prior to docking, undocking, or launching operations.

e. Operating procedures shall ensure the provision of vital dockside services that shall include, but shall not be limited to, continuous fire protection of the ship.

f. When divers are used to complete block builds and to verify the locations of hauled side blocks, the requirement for independent verification by two divers shall be incorporated into operating procedures and checklists (two signatures required by the divers). In addition, procedures and checklists shall also include the requirement that divers have been properly trained and qualified for their assigned duties in accordance with 4.6.2.

g. Additional requirements for operating procedures which cover various facility types are specified as follows:

(1) Floating dry docks (see 5.1.7)

(2) Graving docks (see 5.2.6)

(3) Marine railways (see 5.3.7)

(4) Vertical lifts (see 5.4.7)

(5) Transfer and launch ways (see 5.5.7)

4.7.1.1 Emergency procedures. Emergency operating procedures for casualty and damage control during the operation of the facility shall be specified in advance. These procedures are written for conceivable events or series of events that may cause damage to equipment unless correct procedural steps are taken immediately. These procedures shall limit damage to the facility and prevent or minimize damage to the ship. The procedures for the following events shall be included in the FCR as a minimum for each facility:

a. Fire.

b. Flooding.

c. Loss of communication.

d. Power loss situation.

e. System or component failure.

f. Severe weather develops during docking or undocking.

These procedures shall clearly state for each casualty event the initial response actions and the individual operating station responsible. The appropriate emergency operating procedures shall be posted or readily available at the applicable operating station.

4.7.2 Requirements for operation. The requirements for operation of a certified facility are as follows:

4.7.2.1 Certified rated capacity. A certified facility shall not be used for docking or building Navy ships whose weights, block loadings, or stability calculations exceed the limiting values specified for certification. Also, the operational limitations applied to the facility during certification (see 4.2.3.2) shall not be violated. If an operator uses its facility to accommodate a non-Navy vessel that exceeds the facility's certified line load, the certification shall be automatically suspended pending Navy approval that the facility is undamaged and safe for Navy ships. The operator shall provide calculations demonstrating that the structural limitations of the facility have not been exceeded along with the results of a 100 percent structural inspection of the facility.

4.7.2.2 Requirements for operational limitations and stability considerations for a particular ship. In addition to the requirements for an FCR, operational limitations and stability data shall be determined and made available to the Navy, or documented and submitted when requested, prior to a particular ship being docked, undocked, constructed, fleeted, transferred, or launched. The documentation shall demonstrate that the particular ship and facility are within the constraints imposed as a result of this standard. These requirements vary by type of facility as detailed in subsequent paragraphs. The documentation shall include the principal dimensions of the facility and the ship, loading conditions of the facility and the ship, blocking loads, high block build-up considerations, clearance over the blocks, intact and damaged stability, and other pertinent data as required to demonstrate that the ship's safety will not be impaired. For floating dry docks, buoyancy and stability limitations including the GM of the ship and dock system shall be included.

4.7.2.3 Planning. Using the operating procedures specified in the certification report and the pre-docking surveys as a guide, the following shall be prepared for use during drydocking, transferring, or launching operations for each Navy ship:

a. Sequence and description of important steps.

b. Pumping and flooding plan (where applicable).

c. Docking logs and checklists showing required data entries and verification signatures for the evolution to be performed.

d. Calculations for long ton per foot linear loading, timber bearing stresses, knuckle block loading, wind and seismic overturning moments, and local concentrated block loads. See D.3.4 and NSTM Chapter 997 for ship load distribution and trapezoidal loading calculation procedures that are applicable to all types of facilities.

e. Calculations for the linear block loading shall assume that the keel blocks support the entire weight of the vessel, except for ships assumed to be flat bottomed (see NSTM Chapter 997). Facilities that drydock ships off centerline shall compare the calculated ship loading to linear loading limits based on calculations for the off-centerline position.

4.7.2.4 Normal operation. The following requirements shall be met under normal operation of a facility:

a. The facility shall be operated in strict compliance with the approved written operating procedures.

b. The completed and signed logs (see 4.7.2.3.c) shall be filed and maintained for a period of 5 years.

4.7.2.5 Emergency operation. Emergency operations shall be carried out as follows:

a. Emergency operations for which procedures have been defined in the FCR (see 4.7.1.1) shall be carried out in accordance with these procedures.

b. Emergency actions undertaken for the first time and for which procedures have not been developed in advance shall be analyzed and recorded. The FCR shall be revised to include these procedures.

4.7.3 Accident and incident reports. Accident and incident reports shall be as follows:

4.7.3.1 Requirements. The operator shall submit a report to the Navy in the format shown in Appendix J under any of the following circumstances:

a. The facility is damaged to such an extent that its ability to operate safely is diminished. This report shall be required whether or not a ship is in the facility at the time damage occurs and whether or not the cause of the damage was natural or man-made.

b. The ship or facility is damaged during operations or the lay period.

c. For any incident where unplanned flooding occurs beyond the control of normal drainage procedures with or without a ship in dock.

d. For any operation that is not accomplished according to predetermined plans and procedures (e.g., any unplanned event for which contingencies have not been developed).

e. Any accident that occurs during an operation that results in serious injury or death.

4.7.3.2 Submission. A preliminary written report describing the extent of damage shall be submitted within 24 hours of the incident. Within one month after the incident, a detailed written report shall be submitted and shall contain the information required by Appendix J. Activities shall include a copy of the Critique Report, if a Critique was conducted. Reports prepared by a Naval Shipyard or a Naval Shipyard & Intermediate Maintenance Facility shall be submitted to the cognizant NAVSEA Shipyard Representative's Office (NSRO) for concurrence and forwarding to NAVSEA. Failure to meet these reporting requirements may result in suspension of certification. NAVSEA 04XQ will distribute Accident/Incident Reports.

4.8 Protection of a ship during the lay period. The requirements for protection of a ship during the lay period shall be in accordance with 4.8.1 through 4.8.4.

4.8.1 Applicability. This portion of the standard is concerned with the capabilities of and planning by the operator to protect a ship in the facility during the lay period. For the purposes of this SCP, protection of a ship during operations is specified in 4.7.

4.8.2 Security patrol and fire watch during the lay period. The operator shall provide adequate security and fire watch patrols for protection of the ship. The method of manning these patrols, the frequency of such patrols, the equipment available for emergencies, and the written procedures for these patrols (including their responsibilities) shall be furnished as part of the FCR. Alarms, communications, and facility lighting shall be included in this list of equipment and their use addressed in the procedures. The patrols shall have at their disposal a means for contacting the designated personnel in the event of an emergency.

4.8.3 Systems for the prevention of unauthorized operation and flooding. These systems shall have a positive means of security to prevent unauthorized operations. The operator shall provide a description of these systems and include the equipment in the maintenance program. Where flooding may occur, a system description shall also be provided showing the standby systems for the removal of water that may accumulate in the tanks, compartments, pumphouses, caisson, dock basin, and other places in the facility or in the docked vessel during the lay period. Standby systems include installed systems with the same functional capability as the primary system or portable and emergency systems. The system description for standby systems shall include the number of units available, individual unit capacities, duration of operating time for available fuel (if applicable), and instructions for their operation and deployment.

4.8.4 Disaster planning. Disaster plans shall be furnished in the FCR for the protection of the ship during the lay period. For the SCP, disasters are defined as total shore-power blackouts, floods, storms, fires, hurricanes or typhoons, and earthquakes. These situations necessitate the development of specific actions to prevent or minimize damage to the ship. Disaster plans shall include, but not be limited to the following:

a. Plans for providing adequate backup or emergency power for the operation of vital ship and dock systems in the event of a total shore-power blackout. The detailed requirements in 5.1 through 5.5 outline various backup or emergency power requirements for different types of facilities.

b. Plans for securing the facility and protecting a Navy ship that cannot be undocked in the event of floods, storms, typhoons, or hurricanes.

c. Plans for combating a fire in the facility.

d. Plans for ensuring the ship and dock system can withstand winds of the most severe weather and ground motion from a seismic event at the site. Applicable NAVFAC documents or local building codes where NAVFAC information is not available shall be used for guidance in preparation of these calculations.

4.9 Maintenance program. Maintenance programs shall be in accordance with 4.9.1 through 4.9.4.4.

4.9.1 Purpose. The maintenance program provides a means to ensure the dock is in satisfactory condition to safely operate at the CRC. The maintenance program is mandatory.

4.9.2 General requirements. An operator shall implement a maintenance program subject to Navy external audits at three year intervals with the following stipulations:

a. A formalized maintenance program exists, is implemented, and is shown to be effective through documentation and verification.

b. Operating procedures are maintained and documented, with all changes formally controlled, and submitted to the Navy for approval before implemented.

c. Preventive maintenance is implemented and documented on all items vital to the operation of the facility.

d. Control inspections are performed by qualified individuals at the required frequencies and inspection results are documented.

e. A system for documenting, tracking, and correcting deficiencies reported from all sources (e.g., maintenance personnel, control inspections, operators) is implemented and effective.

f. Configuration control of design and other system changes is implemented through a formalized change control board made up of individuals qualified in their respective roles.

g. Personnel qualification data records are maintained.

h. Records of accidents or incidents reported in accordance with 4.7.3 are maintained.

4.9.3 Detailed requirements. Maintenance programs shall include the following:

4.9.3.1 Preventive maintenance. Preventive maintenance shall be implemented on all items including standby equipment that, if inoperative, would interfere with the operation of the facility or would endanger property. Manufacturer's instructions shall be utilized for equipment maintenance procedures and frequencies when available. For Navy facilities, the criteria established by a planned maintenance system (PMS), if invoked, has precedence. These procedures and frequencies shall be adhered to and shall be performed by qualified personnel. Activities may deviate from planned preventive maintenance intervals to accommodate operations or other significant conflicts that prevent accomplishment on schedule. Deferred preventive maintenance shall be documented immediately and shall be accomplished at the first opportunity. When appropriate, preventive maintenance should be performed before the scheduled time instead of being deferred, to avoid conflicts with dock operations or other significant conflicts.

4.9.3.2 Control inspections. Control inspections shall be performed to record the condition of the facility, identify deficiencies, and to evaluate the effectiveness of preventive maintenance and deficiency correction procedures. Control inspections as specified herein shall be performed as follows:

a. Frequency. Activities may deviate from the control inspection intervals specified below to accommodate drydock operations or other significant conflicts that prevent accomplishment on schedule. Deferred control inspections shall be documented immediately and shall be accomplished at the first opportunity. When appropriate, control inspections should be performed before the scheduled time instead of being deferred, to avoid conflicts with dock operations or other significant conflicts.

(1) Structures shall be inspected at 2-year intervals.

(2) Mechanical and electrical systems, equipment, and components shall be inspected and operationally tested annually. Cathodic protection systems shall be inspected where applicable.

(3) It is not necessary that all parts be inspected simultaneously.

(4) Structures and equipment that are inaccessible for inspection shall not be assumed satisfactory. A basis for acceptance of these areas, such as metrics or historical data, shall be established or the activity shall make them accessible for inspection. For example, structural members in the upper wingwall of a floating dry dock may need to be staged in order to provide for an effective inspection.

b. Inspection personnel. Control inspections may be conducted by the operator's personnel, who shall be individually qualified for their respective roles in such inspections. Control inspections shall be performed by personnel such as maintenance supervisors, engineers, technicians, or independent surveyors who are not accomplishing the routine maintenance of the facility. Qualifications of inspectors shall be in accordance with 4.4.2.3.

c. Forms. Records, schedules, and other associated documentation shall be maintained. Inspection checklists similar to those illustrated in Appendices E through I, as applicable, shall be used to record inspection results. The checklists shall be modified to suit each facility and shall have sufficient detail to ensure 100 percent inspection of all structure and mechanical and electrical equipment. Structural members such as transverse and longitudinal strength members and plating and framing for decks, bulkheads, and shells shall be listed individually by ballast tank, compartment, frame number, or other identifier. Mechanical and electrical equipment such as valves, pumps, and sluice gates shall also be listed individually. The grouping of items for an entire facility such as "pontoon structure," "marine railway cradle structure," or "ballast valves" is insufficient. The necessity or urgency for correcting deficiencies shall be explained on the checklists. Material condition ratings as specified in 4.4.3.1 shall be utilized.

4.9.3.2.1 SUPSHIP/RMC oversight of commercial activity control inspections. SUPSHIP/RMC shall provide oversight for commercial activity control inspections as follows:

a. SUPSHIP/RMC personnel, such as docking observers, surveyors, engineers, or other qualified individuals shall accompany commercial activities during control inspections.

b. SUPSHIP/RMC shall review the activity's control inspection results for accuracy and completeness and concur with the results based on their observations during the inspections. If the inspection results are determined to be inaccurate or incomplete, the activity shall be required to determine the reason for the discrepancies and to implement corrective action by modifying their inspection procedures or inspector qualifications as applicable to correct the inspection results.

c. SUPSHIP/RMC shall verify the qualifications of the activity's control inspection personnel, including divers that conduct underwater inspections, and that the inspection personnel qualification records required by 4.9.2g are maintained by the activity.

d. SUPSHIP/RMC shall review the inspection instructions for divers and be present during the briefing of the divers to ensure that divers understand their inspection responsibilities. SUPSHIP/RMC shall be present (topside) during diver inspections to monitor the extent of the underwater inspection and note the results reported by divers.

e. SUPSHIP/RMC shall maintain records of the control inspection reviews and inspector qualifications for the triennial Navy maintenance audit.

4.9.3.2.2 SUPSHIP/RMC notification. The operator shall notify SUPSHIP/RMC 30 days prior to control inspections in order to permit arrangement for the Docking Observer or other qualified SUPSHIP/RMC personnel to accompany the contractor.

4.9.3.3 Correction of deficiencies. Deficiencies found during control inspections, preventive maintenance, operations, or from any other source shall be reported to the authority responsible for facility maintenance. Conditions or deficiencies that interfere with the operation of the facility or that endanger property shall be corrected immediately, the limitation identified, or operations discontinued. Records shall be maintained of all reported deficiencies and corrective action taken. For uncorrected deficiencies, the records shall indicate when corrective action will be taken or the reason for not taking corrective action. Continuation of drydocking, transfer, or launching operations prior to the correction of deficiencies requires the evaluation and approval of the responsible engineering and operating authorities. This evaluation shall include mitigating actions, compensating features, and modified operating and emergency procedures, as applicable.

4.9.3.4 Configuration control procedures. Changes that affect the baseline certification shall be submitted to the configuration control board. Configuration control board membership shall include personnel knowledgeable in the design, maintenance, and operation of the facility. Only after changes are approved by the configuration control board and the Navy are the changes to be made to the facility. If applicable, these changes shall also be made to the operating procedures and other documentation as specified in 4.2.4. Documentation shall be maintained describing the configuration control procedures being followed. Records, drawings, and sketches shall also be maintained of all changes submitted and the disposition of these changes.

4.9.3.5 Operating procedure changes. Changes that affect operating procedures shall be formally implemented and controlled as specified in 4.2.8. Records shall be maintained describing the process being followed, changes requested and disposition of all changes.

4.9.3.6 Hydrographic survey. Hydrographic surveys shall be conducted underneath floating dry docks and vertical lifts, at launch sites, entrances, and approach channels to all facilities at least every 5 years. Areas where high siltation occurs may require more frequent surveys. A record of the most recent survey results shall be maintained.

4.9.3.7 Fire protection system. A flow and pressure test of the fire protection system described in the FCR shall be conducted every 5 years. The test data shall be described, indicating where and under what conditions pressure and flow were measured. A record of the most recent test shall be maintained. The test shall include pumps, piping, and hoses. In addition, the capability of the system shall be demonstrated during triennial audits.

4.9.4 Triennial audits. Triennial audits shall be as follows:

4.9.4.1 Overview. An audit shall be performed by a Navy team every 3 years. Audits of commercially operated facilities will be scheduled by consultation with the operator via the cognizant SUPSHIP/RMC. Transfer and launch ways shall be audited prior to transferring the load to the ways in preparation for transfer or launch, with a general audit conducted at least every 5 years if there is no transfer or launch operation during this time. The operator shall prepare all spaces of the facility to be inspected to enable the audit team to carry out its task efficiently and safely. The Navy reserves the right to conduct audits more frequently if a particular situation warrants this action. Participants in the Navy audit team will be designated by NAVSEA. This team will conduct a complete review and audit of the existing facility and related documentation. Identified deficiencies will be discussed at an exit brief and formalized in a written report that NAVSEA will forward to the operator.

4.9.4.2 Scope. The scope of the audit will include selected items from the survey requirements and shall be sufficient to evaluate the effectiveness of the maintenance program. It shall include:

a. Examination of the facility, facility certification report, maintenance program documentation, and operational records.

b. Observation of a docking or undocking operation, whenever possible. In the case of a floating dry dock, this operation shall include a submergence test to the maximum dock draft.

c. Evaluation of the control inspection, operating, and maintenance procedures.

d. Examination of the actions to resolve deficiencies.

4.9.4.3 Maintenance program documentation. Documentation required to evaluate an activity's maintenance program shall contain a brief written description of the following:

a. The activity's system for formally controlling and implementing changes to facility operating procedures and instructions, along with documentation showing the disposition of any implemented or proposed changes.

b. The activity's preventive maintenance system and associated maintenance records for each system or equipment including:

(1) Maintenance schedules and frequencies.

(2) Maintenance procedures for each system or equipment.

(3) Maintenance responsibilities (department or shop).

(4) Personnel qualifications required for maintenance evolutions.

c. The activity's control inspection program that includes inspection responsibilities and qualification criteria for inspection personnel. Control inspection documentation shall include:

(1) Inspection results (including underwater hull survey, if applicable). Preventive maintenance records shall not be used as documentation for control inspections.

(2) Material condition checklists similar to those in Appendices E through I, as applicable, with the material condition of each item inspected rated as specified in 4.4.3.1.

d. The system used for reporting deficiencies, including records showing all reported deficiencies and methods used for their prioritization, correction or disposition, and tracking. Related documentation shall include samples of the methods used for reporting deficiencies observed by:

(1) Maintenance personnel.

(2) Operating personnel.

(3) Control inspections.

(4) Other sources.

e. The configuration control procedure being followed, which includes qualification criteria for configuration control board members; methods of submission, coordination, and approval or disapproval of proposed changes; and documentation showing the disposition of any proposed changes. A configuration control procedure and qualification criteria for control board members shall be developed by all participating activities, regardless of whether any changes to the facility have been proposed or effected.

4.9.4.4 Evaluation of audit findings. Based on an evaluation of the audit findings, the certification of a facility may be continued, suspended, or altered as specified in 4.2.4.

5. DETAILED REQUIREMENTS

5.1 Floating dry docks.

5.1.1 Facility types. Requirements of this section apply to single section, open and closed-ended docks, multi-section docks, docks or graving dock launch pontoons that are used for ship transfer, and other special cases or unusual floating facilities.

5.1.2 Certified rated capacity. The CRC shall be substantiated by selecting the largest ship, actual or maximum theoretical, that can be accommodated in the facility and demonstrating by calculations that the supporting structure, including blocking, is adequate to support that capacity. The CRC may be limited by available blocking capacity, buoyancy, or stability conditions.

5.1.2.1 Blocking capacity. The blocking capacity, normally specified or described in tons per linear foot of blocking, shall be based on the load bearing capacity of the blocks and the dock structure supporting the blocks.

5.1.2.2 Available buoyancy. The available buoyancy is the difference between displacement of the floating dry dock at rated freeboard when deballasted (see 5.1.3.3.1.a) and the displacement at the light dock operating condition (see 3.2.11).

5.1.2.3 Stability. The CRC may be limited by stability considerations, as indicated in 5.1.3.3.1.b and 5.1.3.3.1.c. Limiting values of vertical moment of weight and sail area moment may also be an operational limitation.

5.1.3 Design data and physical characteristics. Design data and physical characteristics of the facility shall be in accordance with 5.1.3.1 through 5.1.3.16.

5.1.3.1 FCR content. The design data described in the following paragraphs shall be included in the FCR as specified in 4.5 and Appendix A.

5.1.3.2 General description. A site plan shall be provided showing the location of the dry dock and its orientation. A brief description of the facility shall be provided. Drawings and sketches shall show the watertight compartmentation of the dock, including the vertical extent of the watertight bulkheads. Sketches shall also include the dimensional clearances, arrangement of flying bridges, outrigger platforms, deck heights, tank vent arrangement, buoyancy chambers and locked-in ballast arrangement, and arrangement and dimensions for sonar, rudder, or propeller pits in the pontoon deck.

5.1.3.3 Stability and buoyancy. The calculated stability and buoyancy characteristics shall be provided as part of the initial facility certification and need only be updated in the case of changes. The principal dimensions, displacement, and centers of gravity of the assumed "maximum ship" used in the calculations shall be provided. These calculations shall be by an approved method, such as the Ship Hull Characteristics Program (SHCP), ASSET, or other approved program. Maximum ship calculations do not preclude the preparation of stability calculations and a pumping plan for docking a particular ship. When preparing individual U.S. Navy ship pumping plans where the blocking heights differ from the standard, the light dock weight and center of gravity shall be modified as necessary in the calculations. Procedures for preparation of a pumping plan, required to ensure the stability of the ship-dock combination, and a sample format shall be included in the certification document. Guidance for preparation of a pumping plan is provided in Appendix D.

5.1.3.3.1 Stability and buoyancy criteria. The floating dry dock shall meet the intact and damaged stability and reserve buoyancy criteria specified below:

a. Buoyancy requirements. The available buoyancy shall be determined on the basis of the rated freeboard requirements:

(1) Open-ended docks. The minimum rated freeboard at the lowest point of the pontoon deck of the dock (excluding pits) with the ship lifted shall be as graphically depicted on figure 2 and described as follows:

(a) For docks of 12,000 LT capacity or less, 12 inches of freeboard.

(b) For docks of 18,000 LT capacity or more, 18 inches of freeboard.

(c) For docks with capacities of between 12,000 and 18,000 LT, defined by a linear progression of between 12 and 18 inches of freeboard.

(2) Closed-ended docks. Minimum freeboard with the ship lifted shall be 12 inches, measured from the sill of the stern (or bow) gates.

(3) Docks in the fully ballasted-down condition. Minimum freeboard (measured from the top deck at side) in the fully ballasted-down condition shall be 3.25 feet. If the wingwalls are not watertight to the top deck, then the minimum freeboard shall not be less than 3.25 feet from the bottom of the lowest non-watertight opening to the waterline. "Fully ballasted-down" shall mean:

(a) Tanks 100 percent full in docks where the bottom of the tank vent terminates at the level of the top of the tank.

(b) In docks designed on the isothermal compression principle, to the ballast free surface level in the compressed state. Calculations shall be provided to prove the setting of the vent bottoms will limit submergence. Condition of maximum submergence shall be verified during the submergence test required by 5.1.6.3.

b. Intact stability requirements. The intact stability shall be determined for all modes of operation, including the five critical phases of stability shown on figure 3. Longitudinal stability shall be included for phases 3 and 4. Free surface effects shall be determined and included in the calculations. Intact stability shall meet the requirements stated below:

(1) GM in the phase of minimum stability shall meet the requirement shown on figure 4.

(2) The dock shall withstand the effects of beam winds stated below without heeling more than 15 degrees.

(a) Determine the angle of heel under a 100-knot beam wind, when the ship is fully docked, ship and dock system in phase 5 shown on figure 3.

(b) Determine the angle of heel under 20-knot beam wind, when the ship and dock system is in its minimum-stability phase.

(c) Determine the wind that would cause 15-degree heel when the ship and dock system is in its minimum-stability phase.

The heeling arm shall be calculated as follows:
Heeling Arm due to Wind (FT) = $(0.004\ V^2\ A\ L \cos^2\theta) / (2240\ \Delta)$
Where (referring to figure 5):
A = combined projected sail area of ship and dock (FT^2)
L = lever arm measuring up from half draft of dry dock to the centroid of the sail area (FT)
V = nominal wind velocity (knots)
θ = angle of heel (degrees)
Δ = displacement of ship/dock combination (LT)

c. Damaged stability and reserve buoyancy requirements. The intent of the damaged stability and reserve buoyancy requirements is to provide the dry dock with the capability to withstand a moderate level of damage and resultant flooding, such as could be the result of improper operation, system failure, physical injury from external hazards, etc., without unduly endangering the ship. The dry dock shall withstand the following damage and resultant flooding for the worst combination of sinkage, heel, and trim without heeling more than 15 degrees, trimming more than the lesser of 3 degrees or 20 feet, submerging the margin line (see 3.2.12) or exceeding the maximum allowable differential heads provided under 5.1.3.4.1.h and 5.1.3.4.1.i.

(1) In the fully ballasted condition, phase 1 shown on figure 3, the following two types of casualties and resultant flooding shall be assumed:

(a) Side shell damage: Damage shall be assumed to occur between main transverse bulkheads with penetration up to but not through the inner wing wall. The safety deck shall be assumed to be ruptured.

(b) Bottom shell damage: Damage shall be assumed to occur between main and transverse bulkheads such that the complete space between main transverse bulkheads floods. The safety deck may be assumed to remain watertight.

(2) In the deballasted condition with the ship on the blocks, phase 5 shown on figure 3, the following two types of casualties and resultant flooding shall be assumed:

(a) Side shell damage: Damage shall be assumed to occur on the side shell at a main transverse bulkhead such that the two adjacent tanks or spaces are flooded. Damage shall be assumed to penetrate up to but not through the inner wing wall. The safety deck shall be assumed to be ruptured. For closed-ended docks, the basin shall be assumed flooded.

(b) Bottom shell damage: Damage shall be assumed to occur on the dock bottom at the intersection of a main transverse watertight bulkhead and a main longitudinal watertight bulkhead such that all tanks or spaces adjacent to the intersection are flooded. The safety deck shall be assumed to be undamaged. For closed-ended docks, the basin shall be assumed flooded.

If access openings, tank air vents, or other openings that would allow unrestricted flooding into undamaged spaces are below the final damaged waterline, flooding of these spaces shall be taken into account. Utilization of pumping, grounding of the dock, or any contribution of the mooring system to limit sinkage, heel, or trim shall not be considered. When assessing the flooding of a damaged tank (in the deballasted condition), the tank level shall be assumed to be at the residual level. The buoyancy of the docked ship shall not be considered.

Dry docks previously certified to stability and buoyancy requirements shall continue to be certified to those requirements and shall not be required to meet the above requirements. Dry docks constructed prior to November 2, 1984 for which initial certification is being requested shall meet stability and buoyancy requirements consistent with those applied to certified docks of similar age. As specified in 4.5.2 and 5.1.3.3.2, calculations and other pertinent design and construction data that demonstrate the ability of the dock to meet the above requirements shall be submitted. The calculations shall be made on the premise that the basin depth is sufficient to allow the maximum calculated sinkage, heel, and trim. If basin depths limit the sinkage or angle of heel or trim, it shall be reported.

5.1.3.3.2 Design data. The following design data shall be provided for the facility as designed, if new, or for the facility in its present material condition:

a. A light dock weight determination shall show the dry dock in the light operating condition with all ballast tanks at the residual water levels. A correction shall be added for silt accumulation in the tanks.

b. Curves of form.

c. Tank capacity tables or curves as shown on figure 6, which show the water levels required in each tank to maintain the dock at a given draft. These items shall be developed to ensure that the LCB and LCG of the ballasted dock coincide. A combined set of curves that relates the water levels and tank capacities to the external draft of the dry dock may be presented.

d. Stability calculations to substantiate that the dry dock meets all intact and damaged stability criteria of 5.1.3.3.1. A lifting capacity curve of ship's adjusted VCG versus lifting capacity (see figure 7) shall be presented based on the dock in the phase of minimum intact stability with the rated minimum GM from figure 4 and on damaged stability for the dock in phase 5 with a ship on the dock. The ship's adjusted VCG is defined on figure 8.

e. Buoyancy calculations to determine the maximum lift capacity based on the minimum freeboard criteria of 5.1.3.3.1.a(1) and 5.1.3.3.1.a(2), the light dock weight determination, and the longitudinal distance between the docked ship's LCG and dry dock's LCB. The results shall be presented in graphical (see figure 9) or tabular form.

5.1.3.3.3 Present stability and buoyancy condition. The weight estimate and VCG used in the calculations for maximum lifting capacity, buoyancy, and stability shall be verified by the deadweight survey required by 5.1.6.2.

5.1.3.4 Structure. The dry dock structure shall be as follows:

5.1.3.4.1 Structural design data. The following structural data shall be provided for the facility as designed, if new, or for the facility in its present material condition:

a. Maximum allowable longitudinal bending moment calculation.

b. Transverse strength calculation substantiating the maximum allowable pontoon deck loading in long tons (LT) per linear foot.

c. Longitudinal deflection calculation corresponding to maximum allowable bending moment.

d. Maximum keel block, side block, and hauling block loading calculations including local pontoon deck structure under docking blocks.

e. Maximum pontoon deck loading at other than keel block and side block locations, if different than that of the blocking area.

f. Structural arrangement and scantlings.

g. Longitudinal and transverse watertight bulkhead design calculations.

h. Maximum allowable differential head between adjacent tanks.

i. Maximum allowable differential head between tanks and exterior dry dock draft.

j. Data and calculations substantiating adequacy of connections between sections of multi-section docks.

k. Data and calculations substantiating adequacy of mooring attachments on the dock's structure.

l. Maximum allowable differential head between adjacent tanks (or group of adjacent tanks) to produce a bending moment equal to the maximum allowable value.

5.1.3.4.1.1 Material strength criteria. The material strength criteria shall be in accordance with 4.5.4. The allowable longitudinal and transverse bending stress for steel floating dry docks shall not exceed 0.60 F_y (for allowable stress design). Buckling of compression members shall be considered.

5.1.3.4.1.2 Docked ship's hull girder. Longitudinal transmission of the pontoon deck loads by the docked ship's hull girder shall not be considered. Thus, rigid connections are required between sections in sectional floating dry docks. These rigid connections shall be comparable in strength to the dock's wingwall structure with sufficient reinforcing of the dry dock structure for the rigid connection. The hull girder of the docked ship shall not be considered as a means for connection or alignment of sections in multi-sectioned docks.

5.1.3.4.2 Evaluation of present structural condition. Structural calculations shall be provided for the facility based on its present condition. Corrosion allowances and age effects used during preparation of calculations shall be identified. The operator shall submit corrosion acceptance criteria with supporting calculations for the minimum size or thickness of strength members and plating after wastage due to corrosion (see 4.5.2.c).

5.1.3.4.3 Structural repairs or replacements during ship lay period. There shall be no repairs or replacements that involve the removal of plating, framing, truss members and scantlings of the longitudinal dock structure, transverse dock structure, local structural elements and watertight decks, bulkheads, and shell of a floating dry dock while a ship is in dock. Drydocking of a ship in a dry dock with removed structure is also prohibited.

5.1.3.5 Ballasting and deballasting systems. Ballasting and deballasting systems shall be as follows:

5.1.3.5.1 Ballasting and deballasting time. The time required for ballasting and deballasting the dry dock shall be listed. Actual and design times shall be included.

5.1.3.5.2 Arrangement. Sketches and diagrams shall be provided that describe the number and arrangement of pumps, piping, valves, indicators, and other aspects of the ballasting and deballasting system.

5.1.3.5.3 Piping systems. Piping system design data shall be provided showing that the following requirements are satisfied on those dry docks designed to have such features:

a. The ballast and deballast piping shall be arranged to permit unrestricted flow.

b. Each inlet and outlet ballasting and deballasting system piping shall be provided with two-valve protection. One of the valves in each line shall be located near the shell. Inlets shall be protected by a strainer.

c. Cross-connecting ballasting and deballasting piping shall be arranged so that stability is not impaired.

5.1.3.5.4 Reliability. The data shall demonstrate that failure of a single pump or valve will neither put the dry dock out of operation nor cause damage to the dry dock or a ship in dry dock.

5.1.3.5.5 Ballast and deballast control. System descriptions shall be provided showing valve and pump control systems for normal and emergency operations. It is preferred that valves and pumps be controlled remotely from a central control station. Control of pumps and/or valves may be exercised locally if sufficient qualified personnel are available to maintain control of the drydock and good communications with the control station exists. Valves shall have a manual method of operation in addition to any method of remote operation.

5.1.3.6 Electrical power systems. The electric power system shall support a maximum load, developed during simultaneous operation of the dry dock's dewatering pumps, fire protection pumps, valve opening and closing mechanisms, communication equipment, lighting, alarms, and any other support equipment or systems necessary for the safe operation of the dry dock. An adequate alternate power source shall be immediately available to complete critical docking operations and to operate alarms, lighting, and fire protection equipment in case the primary power system fails. Docking operations using the alternate power source may be accomplished at a reduced rate. The dry dock shall have a lighting system in vital spaces which is automatically actuated in case of main electric power failure. System descriptions and diagrams shall be provided that include a single-line diagram of the power distribution for equipment operation from both the primary and alternate electric power sources.

5.1.3.6.1 Independently-powered docks. Dry docks that are independent of shoreside power shall be provided with multiple electric power generating units. The generating capacity shall be such that, with one unit inoperable, the dock shall be safe while docking or undocking at a reduced rate, and still provide power for alarms, essential lighting, and fire protection equipments. Fuel available for the generating units shall be sufficient for more than one complete docking and undocking cycle.

5.1.3.6.2 Shore-dependent docks. Dry docks dependent on shoreside electric power for the primary source of power shall be provided with an alternate source of power. This alternate power may be provided by an onboard generator or from a separate shore-side feeder line. Shore-side feeder lines shall be separated as far as practicable, fully insulated and shall flex from tidal action. The alternate power source shall have sufficient capability to maintain safe conditions while docking or undocking.

5.1.3.6.3 Distribution. Power distribution shall be arranged so that fire protection and dewatering systems may be operated directly from the primary and alternate power sources. Fused service-disconnect switches or circuit breakers shall be provided for each feeder line in a readily accessible location. These protective devices shall open safely under load or close safely into a fault, either manually or by automatic switching control.

5.1.3.7 Indicators. Indicators shall be as follows:

5.1.3.7.1 Draft indicators and boards. Draft indicators shall be provided at the control station showing the external draft of the dry dock through the full range of operation at the four corners and at the mid-length on the port and starboard sides. Draft boards that show the depth of water over the pontoon deck, shall be located on the wingwalls near the four inboard corners and at the mid-length on the port and starboard sides.

5.1.3.7.2 Trim and list indicators. Indicators shall be provided so that the FOS may be informed continuously of the trim and list during operations.

5.1.3.7.3 Ballast tank level indicators. Ballast tank level indicators shall be provided for controlling ballasting and deballasting. Their accuracy shall be adequate to ensure compliance with the pumping plan and to prevent accidental overstressing of tank bulkheads by excessive differential heads and accidental overstressing of the overall dry dock structure in shear and bending.

5.1.3.7.4 Dry dock deflection indicators. Dry dock deflection indicators shall be used on each wingwall. Their accuracy shall be adequate to prevent accidental overstressing of dock and ship structure. The deflection indicators shall be calibrated to zero as described in 5.1.3.16. Draft boards are not a satisfactory deflection indicator.

5.1.3.7.5 Ballast system valve position indicators. Ballast system valves shall have position indicators. If local and remote indicators are installed, their accuracy shall be calibrated within ±5 percent.

5.1.3.8 Communication systems and alarms. System diagrams and descriptions shall be provided showing that the system is adequate for bringing the ship in and out of the dry dock, aligning the ship in the docking position, controlling ballasting, and deballasting operations and emergency situations. The communications systems shall include primary and alternate systems that have two-way communications capability between all manned stations (dry dock stations, ship, pilot, tugs, security, and fire personnel). The FCR shall include a list of the types and locations of all installed alarms and shall describe how they are monitored.

5.1.3.9 Essential lighting systems. System descriptions shall be provided for installed lighting systems essential for the safe operation and security of the facility.

5.1.3.10 Mooring and anchoring. Drawings and a description of the mooring arrangement shall be provided including details of the mooring pier, quay wall, or other structures used to secure the dry dock at its mooring or operating location. The operator shall describe the most severe weather and seismic conditions that the facility is likely to encounter and shall demonstrate by calculations that the mooring system will hold the dry dock in place when a maximum ship is in dry dock. If a dry dock is equipped with a translation system, the method by which the dry dock is translated to and from the submergence site shall be described and it shall be demonstrated by calculations that its components are adequate for the maximum wind and current listed in the operational limitations. It shall be demonstrated that the dry dock mooring system can operate at the maximum allowed list and trim without binding or interfering with adjacent structures. If anchors are used for heavy-weather mooring, calculations shall be provided showing the adequacy of the system with one anchor missing. Wind speeds published by NAVFAC or ASCE-7 where NAVFAC information is not available shall be used for the design of moorings. The wind speed shall be based on gust duration of 30 seconds. Corrosion and wear criteria for chain and wire rope shall be established.

5.1.3.10.1 Seismic characteristics. The following information shall be provided:

a. Listing of seismic events withstood by the facility in the past.

b. Active faults within a radius of 1 mile of the facility.

5.1.3.10.2 Seismic analysis. Seismic analysis shall be in accordance with the guidance in UFC 4-152-01 for Seismic Use Group III (equivalent to Occupancy Category IV) as modified by 4.5.3. For floating dry docks that are moored by rigid shore or pier connections, such as spud mooring, seismic analysis shall include the mooring components, the dry dock mooring attachment structure, and the mooring pier or quay wall structure. A floating dry dock may be designed to break free of its rigid mooring at a predetermined seismic load to reduce exposure to the seismic accelerations. The mooring component that is designed to fail shall be identified and have supporting calculations. However, the mooring system shall have sufficient strength to withstand the design wind forces. Floating dry docks at transfer ways that are ballasted onto a support grid shall have the supporting structure analyzed for seismic effects. Soil liquefaction shall be considered in the analysis of the mooring structure foundation.

5.1.3.11 Closures. In the case of floating dry docks equipped with watertight stern closures, the structural and mechanical details and analysis, which demonstrate their structural adequacy and reliability, shall be included.

5.1.3.12 Blocking. Descriptions of the docking blocks, block securing systems, shores, and block hauling system shall be provided that show their physical characteristics, including material and dimensions. Calculations shall be provided that demonstrate the blocking system is stable and structurally adequate (including adequate fastening) to resist ship landing, ship dead weight, hurricane, and seismic loads as specified in NSTM Chapter 997. Methodology on use of high blocks and cribbing shall also be provided.

5.1.3.13 Fire protection systems. The fire protection systems installed to combat fire in all areas of the dry dock shall be described and a diagram provided. This description and system diagram shall include minimum available water pressure, location of connections, location and size of fire stations and pumps, total available pump capacity, redundancies, and backup features. The number, type, location, and capacity of portable extinguishers shall be described. A flow and pressure test of the fire protection system described in the FCR shall be conducted every 5 years. The test data shall be described, indicating where and under what conditions pressure and flow were measured. A record of the most recent test shall be maintained. The test shall include pumps, piping, and hoses. In addition, the capability of the system shall be demonstrated during triennial audits.

5.1.3.13.1 Requirements. The minimum available capacity for supplying a surface ship or submarine firemain (either permanently installed or temporary) shall be at least 300 gallons per minute (gal/min) per 100 feet of maximum docked ship length, except that only 300 gal/min are required for submarines less than 500 feet in length. The capacity available to serve a ship's firemain (either permanent or temporary) may also serve the fire stations in the dry dock, but in no case shall the total capacity be less than 1,000 gal/min. Where the fire protection water supplies to a submarine and the dry dock are separate, at least 300 gal/min of water shall be supplied to the submarine firemain and a minimum of 1,000 gal/min of water shall be supplied to the dock. Hull insulation fires can best be extinguished with water, preferably applied as a fog. Either of the following shall be available for fire watches assigned to hot work in areas where hull insulation on submarines is endangered:

a. A portable fresh water extinguisher of either pressure type or pump with a 2.5 gallon minimum capacity; or

b. A minimum ¾-inch hose fitted with a fog nozzle supplied from a fresh water source.

Application of a given extinguishing agent to a shipboard fire shall conform to restrictions specified in the current contract or specifications. Fresh water supply and adequate hoses for complete coverage shall be available for use in the event a reactor compartment fire cannot be controlled by carbon dioxide extinguishers. Hose lines for fighting fires in way of the reactor compartment shall be restricted to fresh water sources. The pressure at the fireplug outlets shall provide a minimum nozzle pressure of 60 lbs/in^2 when supplying fire nozzles at the specified capacities at the most remote and highest elevation hose connections. Booster pumps may be used at the dry dock outlets to boost pressure to a ship's firemain (either permanently installed or temporary).

5.1.3.13.1.1 Backup pumping capability. A backup pumping capability shall be provided to ensure that the full water capacity for fire protection is available within 15 minutes, following the loss of the largest pumping source in the system.

5.1.3.13.2 Fire stations. Dry dock fire stations shall consist of 2½-inch hose valves with 2½-inch supply outlets and 1½-inch hose outlets. Fire stations shall be equipped with hoses and nozzles so that any area can be reached with a 20-foot fog stream from 100 feet of hose. Fire stations serving the bottom of the dry dock shall preferably be hard piped from the water supply sources. However, portable stations that are securely lashed down and supplied by jumper hoses will be considered satisfactory in meeting this requirement.

5.1.3.13.3 Liquid fuel and electrical fires. Means shall be provided for combating liquid fuel and electrical fires in the dry dock. This requirement may be met by providing portable extinguishers or by installed systems. As a minimum, a 15-pound CO_2 extinguisher shall be located in pump rooms and other spaces having electrical equipment, and a dry chemical extinguisher (18 or 27 pound type) shall be provided at locations subject to liquid fuel fires (e.g., fueling stations and diesel-engine driven equipment).

5.1.3.14 Ship transfer system. The system for moving a ship between a transfer way and a floating dry dock and the method by which dry dock stability and ship alignment are maintained shall be described. The design calculations and load carrying capacity of the system shall be provided.

5.1.3.15 Crane securing system. The forces on the crane securing systems shall be calculated to verify that these systems are adequate to hold under conditions of maximum list, trim, seismic, and wind loading.

5.1.3.16 Working plane. A pontoon working plane shall be established to average out the irregularities in the level of the pontoon deck. This optical plane shall be used for setting the heights of the blocks. This working plane shall be established with the dock in an unstressed condition and shall be reestablished after each drydocking of the dry dock, joining sections afloat or any time the pontoon working plane may have changed. The dry dock longitudinal deflection detection system shall be calibrated to zero each time the working plane is reestablished.

5.1.4 Operational limitations. Enclosure III of the FCR, described in Appendix A, shall contain the following information:

a. Wind, tide, and current conditions under which operations are permitted.

b. Maximum block loads in long tons per block and long tons per linear foot of blocking length.

c. Maximum longitudinal hull deflection.

d. Maximum allowable differential head between adjacent tanks.

e. Minimum GM required for ship-dock combination together with a curve of ship's adjusted VCG versus lifting capacity.

f. Minimum ballasted and deballasted freeboard.

g. Maximum list and trim of dry dock.

h. Maximum allowable differential head between tanks and exterior dry dock draft.

5.1.5 Calculations for drydocking a particular ship. In addition to the calculations required by NSTM Chapter 997, the following calculations and data shall be available prior to each individual ship docking or undocking.

a. Calculation for the ship's stability.

b. A check to ensure the ship's adjusted VCG is within the allowed area of the intact stability curve of figure 7.

c. A pumping plan (see Appendix D).

d. A check to ensure block loadings are within the limits of 5.1.3.4.1.b and 5.1.3.4.1.d (see D.3.4 of Appendix D).

e. A check to ensure differential heads are within the limits of 5.1.3.4.1.h and 5.1.3.4.1.i.

5.1.6 Surveys. Surveys shall be in accordance with 5.1.6.1 through 5.1.6.11.

5.1.6.1 Checklist. A summary checklist shall be included in the FCR. A sample checklist for material surveys is provided in Appendix E.

5.1.6.2 Light dock weight determination. The light dock operating condition (see 3.2.11) shall be verified by a deadweight survey and the results shall be included in the survey results. NAVSEA S9086-C6-STM-010/CH096 provides the procedures for performing deadweight surveys. The deadweight survey shall be used to verify the maximum lifting capacity of the dry dock at its rated freeboard and its stability (see 5.1.3.3.3).

5.1.6.3 Submergence test. A submergence test shall be conducted and documented in the survey results. The dry dock shall be ballasted down to determine the maximum draft of the dock, to verify the minimum freeboard in the submerged condition, and to check the watertight integrity of the dry dock. In the case of docks designed to attain the maximum allowable design draft by means of an air cushion system under the safety deck, the distance of the ballast tank vents below the safety deck and the location of these vents with respect to the center of area of the tank top shall be recorded and made a matter of record in the FCR. For dry docks that can submerge beyond the minimum freeboard requirement of 3.25 feet by design, the tank levels at which the dock attains 3.25 feet of freeboard shall be recorded and made a matter of record in the FCR (see 5.1.3.3.1). If the maximum submerged draft cannot be attained because of a limited basin depth, it shall be reported in the FCR. After determining the maximum draft, the dry dock shall be partially deballasted and all ballast system valves and pumps secured for 45 minutes to check watertight integrity. The initial and final tank and draft levels shall be reported in the survey results.

5.1.6.4 Leakage. Surveys for leaks shall be conducted to determine the watertight integrity of the shell plating, decks, and transverse and longitudinal bulkheads. Tests may be accomplished by visual inspection, air tests, water tests, or as conditions warrant.

5.1.6.5 Structural survey. Structural surveys shall be conducted in accordance with the requirements listed herein. Regardless of the size of the facility, the surveyor shall conduct an inspection of 100 percent of the facility, including all ballast and buoyancy tanks and voids.

5.1.6.5.1 Underwater hull survey. An underwater hull survey shall be conducted every 5 years by drydocking or careening the dock or by using qualified divers. As part of the survey, all flood water sea chests, intakes, and strainers shall be examined and any intakes with 25 percent or greater restriction shall be cleaned out and reported. After the dry dock is 10 years old and every 10 years thereafter, a thorough inspection of the entire underwater portion of the hull shall be conducted by drydocking or complete careening the dock. The date of the most recent drydocking or complete careening shall be reported.

5.1.6.5.2 Visual inspection. All structure including plating, structural members, joints, foundations, sea chests, areas under blocks, crane rails, and structure associated with mooring shall be checked. If the preservative coating appears to be blistering, flaking, or peeling, the coating shall be removed, exposing the steel for inspection to determine the extent of corrosion, pitting, thinning of edges, loose rivets, cracked welding, and elongation of bolt holes. Bent, buckled, torn, or otherwise damaged structural elements shall be identified. All doubler plates shall be identified by size and location.

5.1.6.5.3 Gauging. Gauging shall be accomplished in accordance with 5.1.6.5.3.1 through 5.1.6.5.3.3. Additional measurements shall be taken to identify the full extent of unacceptable plating and members in areas found to have excessive wastage or areas that are suspected to be deficient by visual inspection. The surveyor shall demonstrate that the ultrasonic testing procedures employed meet Navy requirements.

5.1.6.5.3.1 Periodic gauging of pontoon deck. When a dock is 10 years old and every 5 years thereafter, thickness measurements shall be taken every 8 feet on one transverse belt for each 50-foot length of pontoon deck. The belts shall be equally spaced and located at different positions along the deck for each 5-year inspection. Keel blocks in way of and adjacent to the belts shall be moved and measurements taken at those locations.

5.1.6.5.3.2 Periodic gauging of other dock plating. When a dock is 20 years old and every 5 years thereafter, thickness measurements shall be taken as follows:

a. Top wingwall decks and safety decks shall have one thickness measurement taken for every 8 feet of dock length. If the deck width is greater than 12 feet, two measurements shall be taken in the transverse direction. Different locations shall be measured for each 5-year inspection.

b. Inboard and outboard wingwall shell plating above the normal waterline shall have measurements taken every 8 feet on one vertical belt for each 100-foot length of the wingwall. The belts shall be equally spaced and located at different positions along the wingwall for each 5-year inspection.

c. Thickness measurements of one complete belt for each 100-foot length of the dry dock underwater hull shall be taken, utilizing a process that is acceptable to the Navy. The belts shall be equally spaced, but located at different places along the dock for each survey. For each belt, a minimum of two readings shall be taken on each plate if the plates are longitudinally oriented; three on each if transversely oriented. Additional thickness readings between belts shall be taken on locations found or suspected to be deficient by visual inspection. The results shall be included in the survey results.

5.1.6.5.3.3 Periodic gauging of internal dock structure. When a dock is 20 years old and every 10 years thereafter, thickness measurements shall be taken as follows:

a. Ballast tank, void and buoyancy chamber internal structural members such as plate stiffeners and truss frame members shall have measurements taken on one-third of the members and seachests/ballast piping seaward of the first closure valve. Measurements shall be taken on the webs and flanges at a maximum spacing of 6 feet along the members. A different one-third of the members shall be measured for each 10-year inspection.

b. Ballast tank, void and buoyancy chamber watertight and structural non-watertight bulkhead plating shall have three measurements taken every 20 feet along pontoon bulkheads and up wingwall bulkheads. Two of the measurements shall be taken within 2 feet of the top and bottom (or inboard and outboard edges in the case of wingwall bulkheads) and one in the middle portion of the bulkhead. Different locations shall be measured for each 10-year inspection.

5.1.6.5.3.4 Documentation and reporting of gauging results. Drawings showing the positions of the measurements, tables showing original (designed) and current (measured) thicknesses, and percentages of wastage shall be maintained for review during the NAVSEA maintenance audits. A report shall be made to the Navy of any deficient structure found during the inspections. The report shall include a corrective action plan, a schedule for the repairs, and the safety factor (referenced to yield or buckling stress) for structural members and plating that are corroded beyond the repair criteria. Gauging results shall be included in the initial certification report as applicable.

5.1.6.5.4 Corrosion criteria. The repair criteria to determine how much material loss is acceptable shall be determined as described in 5.1.3.4.2.

5.1.6.5.5 Temporary use of doubler plates. The use of doubler plates is not permitted for the repair of wasted plating, however, they may be used as a temporary repair not to exceed 6 months in accordance with the following criteria:

a. The doubler plate shall be of the same material and not less than the thickness of the original design plate.

b. The doubler plate shall be seal welded to prevent seepage of water or moisture between the two plates.

c. The corners of doubler plates shall be radii.

d. Where doubler plate dimensions exceed four square feet, plug welds are required. Plug welds shall be spaced two feet on centers on all intermediate framing.

5.1.6.6 Inspection of blocking. The type of blocking, bearing area, means of buildup, cribbing, and shoring shall be reported. Hauling blocks, if used, shall be checked to see that the hauling mechanism ensures freedom and is adequately supported by the substructure. Specific requirements used for fasteners and methods of fastening timber blocks, soft cap material, and/or the timber portion of composite blocks shall be in accordance with Appendix K.

5.1.6.7 Inspection of electrical and mechanical systems. Electrical and mechanical systems shall be inspected in accordance with 5.1.6.7.1 through 5.1.6.7.10.

5.1.6.7.1 Ballasting and deballasting systems and gauges. The surveyor shall observe at least one complete ballasting and deballasting cycle and provide a report on the following:

a. Actual ballasting and deballasting times. If times are markedly different from ballasting and deballasting times for which the system was originally designed, reasons for this variation shall be explained in the survey results (see Appendix A).

b. Adequacy of the power supply, determined by operating all applicable pumps (and the fire pump, if installed on dock) at the same time.

c. Smoothness of the operation of all pumps, motors, valves, and generators by remote as well as local control.

d. The accuracy and reliability of water level indicators when compared with actual soundings of the water level in each tank. Variations shall be included in survey results.

e. The existence of a deflection detection system for both wingwalls. If deflection targets are used, they shall be calibrated to zero when the dry dock is in the unstressed condition. After the working plane has been established with the dry dock in an unstressed condition (see 5.1.3.16), a permanent reference mark to zero on each target shall be measured and recorded.

f. Tightness of air-cushioned boundaries, if they are required, in the tanks.

5.1.6.7.2 Detailed examination. Generators, pumps, motors, and other systems shall be opened for inspection only if, after observing them in operation, abnormal behavior is noted that justifies this action. The tests and inspections shall follow criteria and procedures furnished by the original equipment manufacturers or technical manuals.

5.1.6.7.3 Controls. The control systems shall be inspected as follows:

a. Control panel. Check wiring, relays, bulbs, and lenses for dust collection and abrasion of wires.

b. Motor controls. Check contactors, relays, electrical and mechanical interlocks, and manual overrides.

c. Limit switches. Check panel limit switches and switch actuator mechanisms.

5.1.6.7.4 Communication systems and alarms. Primary and alternate communications systems and alarms shall be checked thoroughly and tested for proper operation.

5.1.6.7.5 Fire protection equipment. The fire protection equipment shall be checked for conformance with the requirements of 5.1.3.13. A flow and pressure test shall be conducted and data submitted. The test data shall be described, indicating where and under what conditions pressure and flow were measured.

5.1.6.7.6 Crane stops, rails, supports, and securing systems. The crane rails, supports, stops, and securing systems shall be inspected for structural soundness. The forces on the crane securing systems shall be calculated to verify that these systems are adequate to hold under conditions of maximum list, trim, seismic, and wind loading.

5.1.6.7.7 Mooring, anchoring and translation systems. The mooring and anchoring system shall be examined thoroughly for adequacy and for signs of local buckling and excessive loading. Mooring, translation chains, and wire ropes shall be gauged at 10 foot intervals for wear and corrosion every 5years.

5.1.6.7.8 Electric power systems. The primary and alternate electric power systems shall be inspected and their adequacy determined.

5.1.6.7.9 Stern or bow closures. In the case of docks that have stern or bow closures, the operation of the closures shall be observed and the structure and machinery shall be inspected.

5.1.6.7.10 Ship positioning gear. Bitts, bollards, winches, capstans, and cleats shall be inspected for fatigue, looseness, or other signs of deterioration or excessive loading. Hauling chains and wire rope shall be gauged at 10 foot intervals for wear and corrosion every 5 years.

5.1.6.8 Site survey. The site survey shall include inspection of pier and mooring attachments, electrical power supply feeders, and fire protection system interfaces.

5.1.6.9 Hydrographic survey. A hydrographic survey shall be conducted underneath the dock and in the approach channel referenced to Mean Low Water on the Atlantic coast and Mean Lower Low Water on the Pacific coast at least every 5 years, and a sounding chart shall be included in the survey results. Complete tidal ranges, approach channel widths and depths, dredging frequency, and any irregularities indicative of soil movement in or out of the dock areas shall be noted. Where a history of hydrographic data is available, rates of siltation shall be noted.

5.1.6.10 Observation of docking or undocking operation. The surveyor shall observe at least one complete docking or undocking operation to determine the effectiveness of the equipment, personnel, and procedures. Electrical, mechanical, control, and communications systems shall be observed and any malfunctions shall be identified.

5.1.6.11 Sectional dry docks. If it can be scheduled, the surveyor should observe the assembling and disassembling process of dry dock sections. The connections shall be examined for structural soundness.

5.1.7 Operating procedures. In addition to the general requirements specified in 4.7.1, the operating procedures shall set forth, in sequence, the actions required by each manned operating station during the docking or ship transfer cycle. The procedures shall list events in step-by-step detail, commencing with prerequisite checks of dock systems, prior to ballasting for entry of the ship, and continuing with the events through the drydocking of the ship until the ship is secure on the blocks, the pontoon deck dry with required freeboard, pumping secured, and ship and dry dock ready for industrial work. The procedures shall also list events, commencing with prerequisite checks prior to the undocking operation and continuing until the dock has been deballasted and secured. Single line diagrams of the piping and electrical systems shall be provided in the procedures. These procedures shall describe the methods of communications used between personnel at various docking stations of the dry dock, ship, pilot, and tugs. Information shall be provided describing alternate communication systems used in case of primary system failure.

5.1.7.1 Detailed requirements for floating dry docks. The detailed requirements for floating dry docks specified in the following paragraphs shall be incorporated into operating procedures and checklists. The operator of a floating dry dock shall establish procedures which include:

a. Instructions for the preparation and implementation of a pumping plan with or without a ship in dock.

b. Lineup checklist for use at the completion of docking and undocking shall include the requirement for independent checks of the valve and control positions by two individuals for the dewatering and flooding system valves.

c. Instructions for obtaining and monitoring deflection readings taken during docking and undocking evolutions.

d. Instructions for diver-completed block builds and diver-verified hauled block locations. The instructions shall include the requirement to properly mark blocks so that divers can easily identify them and their required orientation underwater. The instruction shall include the independent verification by two divers.

e. Instructions for the hauling of blocks during docking evolutions. The instructions shall include the requirement to properly mark hauling blocks or chains so that the marks are visible to the dockmaster when blocks are in the inboard and outboard positions.

5.1.7.2 Flooding precautions during the lay period. The operator shall prepare a written procedure and shall have qualified personnel readily available to maintain the proper list and trim of the dry dock during the lay period. The procedure shall list the sequence of events; equipment to be used; personnel designated to respond immediately to control potentially hazardous flooding situations on board the dock and the ship in dock; alarms, communications and facility lighting; methods for recording valve lineup and tank level changes; and descriptions of the systems and equipment available for removal of water from the dry dock ballast tanks, compartments, and the ship in the dock.

5.2 Graving docks.

5.2.1 Facility types. The requirements of this section apply to graving docks.

5.2.2 Certified rated capacity. The CRC shall be substantiated for the maximum theoretical loading that can be accommodated in the facility and demonstrating by calculations that the supporting structure, including blocking, is adequate to carry that capacity. The CRC may be limited by available blocking capacity.

5.2.3 Design data and physical characteristics of the facility. Design data and physical characteristics shall be in accordance with 5.2.3.1 through 5.2.3.14.

5.2.3.1 FCR content. The design data described in the following paragraphs shall be included in the FCR as indicated in 4.5 and Appendix A.

5.2.3.2 General description. Drawings and sketches shall be provided showing the graving dock as it is presently constructed. Plan views and sections through the dock that show the arrangement and structural characteristics of the dock shall be provided. The structural sections shall show dimensions, including water levels, concrete thicknesses, reinforcement locations and sizes, foundation details including description, and location of piles and pressure-relief systems.

5.2.3.3 Site characteristics. The following site characteristics shall be provided with the design data.

5.2.3.3.1 General geology. A brief description shall be provided of the site's geology and geological formations.

5.2.3.3.2 Soil characteristics. A general description of the predominant soil types shall be provided. Where boring logs (soil profiles and laboratory test data) are available, they shall be included in the FCR. Groundwater elevations shall be noted.

5.2.3.3.3 Results of soil surveys. Where detailed structural analyses are necessary for certification purposes (due to absence of adequate historical data), and where the material condition survey shows signs of distress, survey results and associated laboratory analyses shall be included.

5.2.3.3.4 Results of special geotechnical studies. Results of past geotechnical studies, conducted to determine reasons for settlement, voids, or excessive seepage, shall be provided. The Navy may require additional geotechnical studies and surveys prior to certification if the survey results presented by the surveyor indicate the necessity for these studies.

5.2.3.3.5 Seismic characteristics. The following information shall be provided:

a. Listing of seismic events withstood by the facility in the past.

b. Active faults within a radius of 1 mile of the facility.

5.2.3.3.6 Seismic analysis. Seismic analysis shall be in accordance with the guidance in UFC 4-152-01 for Seismic Use Group III (equivalent to Occupancy Category IV) as modified in 4.5.3.

a. Graving docks that have walls that are supported by a moment resisting connection at the dock floor slab shall include seismic effects in determining the floor slab ship loading capacity and when analyzing the various conditions such as flooded or dewatered with no ship. Dock walls that do not have sufficient reinforcement at the connection with the floor slab shall be analyzed for overturning stability using the applicable load combinations in which the dead load is reduced by a factor of 0.9 for LRFD or 0.6 for ASD. Fluid loads and earth pressure loads acting on the dock walls shall be included in all of the applicable load combinations except when those loads counteract the seismic or ship live loads. Load combinations shall be applied to produce the most unfavorable loading conditions possible.

b. Graving docks shall be analyzed for all loading conditions, including basin empty with maximum ship, basin flooded, and basin superflooded (if applicable). Analysis shall consider the effects of extreme low water (ELW) and extreme high water (EHW) tides.

c. Mechanical and electrical components, including pump house and service gallery equipment foundations and cable and pipe supports, shall be analyzed for seismic performance. Caissons and entrance closure gates shall be analyzed for seismic performance and shall include the effects of the inertial force of the mass of the displaced water on the outer face of the closure. Soil liquefaction shall be considered in the analysis of the graving dock and pump house foundations.

d. Under Level 1, earthquake loading deformations resulting in damage to the structure and ancillary components (e.g., pipes and utility lines, pavements, conveyance equipment) shall be precluded. Ground and structural deformations may occur during a Level 2 earthquake as long as they are limited to insure operability of critical functions in the facility. This includes utility lines associated with the structure and flooding and dewatering systems. No uncontrolled flooding of the graving dock is permissible. The ability to safely undock a vessel following both Level 1 and Level 2 events is required.

5.2.3.4 Structural analyses. Calculations made as a part of the FCR or a summary of the original calculations shall be appended to document the structural capacity of the dock. The following paragraphs describe the evaluation criteria and the structural analysis required. Also, any deterioration noted during the material condition survey that will affect the capacity of a component shall be considered in the analysis.

5.2.3.4.1 Applied loads. Drawings and other documentation shall be provided that indicate values used for lateral earth and hydrostatic pressure, hydrostatic uplift pressures, and earthquake loads. These values shall be based on parameters presented in site characteristics (see 5.2.3.3), but any other data necessary to develop and substantiate these values shall be presented. If values are based on tests, there will be sufficient variance to warrant use of a maximum and a minimum value for lateral and uplift pressures. The estimate of lateral earth pressures shall consider the rigidity of the graving dock walls (consider at-rest lateral earth pressures for rigid type docks where wall rotation is negligible). Ship loading shall be based on the structural capacity of the dock. The largest line loads not exceeding the structural capacity of the dock shall be used in the analysis. These loads may include any special situation docking such as off-centerline docking, tandem docking, or multi-line blocking (aircraft carrier, tandem hull). Note: The heaviest ship that is to be docked in the facility may not develop the largest line loads to be analyzed. Documentation shall state how ship weight is distributed to the blocks, magnitude and spacing of actual line loads used in dock analysis, and what portion of blocking arrangement is represented by line loads. Localized forces, such as block storage, moving loads or cranes and truck, shall be based on the structural capacity of the dock.

5.2.3.4.2 General analysis methods. The method used to determine the structural capacity of the dock and its components shall be in accordance with approved industry standards applicable to the material being analyzed (see 4.5.4). The method used shall be described. The structural capacity of preexisting components and construction material, such as piles, shall be identified and discussed, including basis for these values (assumed, original drawings, specifications, sample tests, etc.). For most docks, the analysis shall consider a typical transverse section. For unusual loading conditions (such as an intermediate caisson) a longitudinal analysis may also be necessary. The analysis of the dock floor would normally be based on classical elastic foundation techniques. Foundation pressure distributions could be assumed, but it shall be demonstrated that assumptions are conservative for all dock loading cases.

5.2.3.4.3 Dock walls. The critical loading combinations and resultant factors of safety provided by the floor slab, or comparison of actual stresses with allowable stresses, including a statement concerning adequacy of walls shall be discussed. Since wall thickness and reinforcing typically vary, a number of critical locations throughout the height of the wall shall be investigated.

5.2.3.4.4 Uplift stability. Calculations shall be provided that demonstrate the uplift resistance furnished by the dock, including how resistance supplied by adjacent soil was determined. Uplift resistance of piles and how tension capacity was determined shall be indicated. Total uplift pressure that can be resisted and factor of safety provided against actual uplift pressure shall be noted. Adequacy of uplift resistance shall be discussed. If seismic events are considered significant, how uplift resistance is determined for this condition shall be discussed and its adequacy demonstrated.

5.2.3.5 Flooding systems. The following information shall be provided:

a. Designed flooding time.

b. Flooding tunnels. Arrangement of tunnels, air vents, and access.

c. Stop logs or other features that serve as backup to flooding valves or gates. Arrangement, structure, calculations showing structural adequacy, method of operation, corrosion protection, and seals.

d. Flooding valves and gates. Arrangement, structure, calculations showing structural adequacy, operation, corrosion prevention, seals, and adequacy of stems. Power required for operation of sluice valves or gates and the ability to manually operate in the event of power or equipment failure.

e. Superflooding and buoyancy assistance features, if applicable.

f. A one-line diagram of the flooding system.

5.2.3.6 Dewatering and drainage systems. Drawings or sketches shall be provided that show pump house configuration with equipment, piping and valve arrangement, discharge tunnel, and controls. A one-line diagram of the entire system shall be provided. If the system serves several docks, the entire system shall be described. Dewatering and drainage systems shall be in accordance with the following:

a. Pumps and piping. For dewatering, drainage, and sump pumps, provide the number and types of pumps, their capacity and head rating, lubrication systems, power requirements, and controls. Valves and piping shall be described by type, size, function, and how and where controlled. There shall be at least two drainage pumps available whenever a Navy ship is in graving dock. They can be permanent or portable. Each drainage pump alone shall have sufficient capacity for the removal of drainage water.

b. Discharge tunnels. The size, number, and arrangement shall be provided for tunnels, grated inlets and the discharge end of the tunnels. A description of backup or redundant features shall be provided.

c. Controls. A description of primary and backup controls shall be provided.

d. Alarms. A description of alarm systems shall be provided.

5.2.3.6.1 Water level sensing systems. U.S. Navy and commercially operated graving docks that are capable of drydocking nuclear powered ships shall have two independent water level sensing systems. The primary sensing system shall operate from station power and be designed to activate the pumps and the alarm. A backup or secondary sensing system shall have an independent power source and operate the alarm only. Both systems shall announce locally and at a central location that is continuously manned.

a. Figures 10 and 11 are examples of water level sensing systems that meet the requirements.

(1) Figure 10 is an example of a system with an independent power source for the secondary water level sensor and alarm with an optional battery backup (battery backup is recommended) and is the preferred configuration. Note: Power sources are considered independent when the failure of any single component, power line, or other utility or the tripping of a single circuit breaker will not cause both systems to malfunction. The independent power lines shall extend outside the pump house to a substation or other power source such that failure of the power to the pump house automatically results in the notification of the central monitoring station. The secondary power source for the drainage pumps may also be a standby diesel generator set that will operate in the event of power failure to the pump house. If a battery backup system is provided for the water level sensors, it shall be monitored as described in 5.2.3.6.1.a(2).

(2) Figure 11 is an example of a common power source for both primary and secondary sensing systems and alarms with a mandatory battery backup for the secondary system. Note: the battery backup system for the secondary water level sensing system shall be provided with instruments to indicate proper battery charge and function. A procedure to routinely monitor and record the battery condition shall be established and approved by the Navy. An engineering analysis shall be conducted to ensure that the installed battery backup is adequate for use in an industrial environment (e.g., temperature and humidity) and manufacturer's maintenance requirements (including replacement intervals) are incorporated into the graving dock facilities preventive maintenance program.

b. A system diagram of the drainage pump and water level sensor and high water alarm including arrangement of power sources and distribution systems and alarm circuitry shall be provided for each graving dock. Figures 10 and 11 show typical systems and the level of detail desired. The sketch and an accompanying description shall include the following information:

(1) Primary electrical power source (name of public utility and number of main lines entering the activity) for the drainage pumps and primary water level sensor and high water.

(2) Secondary electrical power source for backup drainage pump power.

(3) Electrical power source for secondary water level sensor and high water alarm.

(4) Additional electrical power sources for the drainage pumps and/or water level sensors and high water alarms not included in items a and b above (i.e., battery backup, stand-by generator, etc.).

(5) The water levels at which drainage pumps are automatically started and the high water alarms sound. Reference the water levels to the floor elevations of the graving docks connected to the drainage pump suction chamber. List the number and capacities of the drainage pumps at each level of automatic operation and additional drainage pumps, if any, that are not normally set for automatic operation but are available for manual operation to control flooding.

(6) The normal drainage rate in gallons per minute for the graving dock based on historical data (i.e., dock and ship). Provide the estimated time for the water level to rise to the graving dock floor elevation if drainage pumping is lost and the initial water level in the suction chamber is at the lower level for automatic operation of drainage pumps (initial elevation of –10 feet is used on figures 10 and 11).

(7) The junctions and common circuits for the primary and secondary power distribution systems for the drainage pumps and the water level sensors and high water alarms. This includes the junctions and common circuits at the pump house and any junction toward the power source if a second public utility line or other remote power generator is used for secondary power.

(8) The electrical circuits that are monitored and that will alarm at the central monitoring station if they lose power locally.

(9) The physical location, type, and number of high water alarms both local and remote.

(10) The physical location, type, and number of water level sensors.

(11) Description of applicable systems other than electrical power that are used for water level sensors such as compressed air. Include descriptions of system alarms and redundancies. The failure of an air supply due to a single point failure in non-redundant air systems for bubbler type water level sensors shall be addressed. Sufficient redundancies to preclude single point failures affecting both sensing systems shall be provided or there shall be alarm systems that indicate failure of the air supply. Any alarms for the air supply system shall have two air pressure sensors with independent power sources and alarm circuits to the central monitoring station similar to the requirements for the water level sensing system and high water alarm power requirements.

(12) The length of time that a battery backup will power the water level sensing system and alarm circuit in the event of power failure.

(13) The type of instruments that are installed locally to indicate the proper charge and function of any battery backup system for the water level sensors.

(14) The frequency and brief description of the graving dock watch patrols including the specific procedures for monitoring and recording the condition of battery backup systems for water level sensors.

c. Graving docks that have water level sensors for high water alarms located in pumpwell suction chambers that are interconnected with other graving docks, such that a graving dock is isolated from its sensors during dewatering or other pumping operations for the interconnected graving docks, shall have provisions in their operating procedures to continuously monitor the water level. Adequate drainage pumping capacity with redundancies in equipment and power sources shall be provided for graving docks similarly isolated from their normal drainage systems.

5.2.3.6.2 Draft indicators. Draft indicators, if installed at the control station, shall be described. Draft boards, which show the depth of the water in the basin, shall be provided.

5.2.3.7 Electrical power systems. Sketches, diagrams, and descriptions shall be provided showing that the primary power supply is adequate for normal operation and that adequate alternate power capacity is available for the operation of all essential equipment including communications, alarms, lights, fire protection systems, drainage systems, and vital shipboard equipment. Alternate power for drainage systems shall be available within 30 minutes.

5.2.3.8 Flooding protection systems. While a Navy ship is in graving dock, the graving dock shall be isolated from all potential flooding sources, such as flooding and dewatering systems, by two methods of protection. On flooding systems, one of these protective methods shall be a positive means of closure that can be operated under dynamic or static conditions. When the operational means of closure is temporarily out of service for maintenance or repair, two static methods of protection are acceptable until the operational barrier is returned to service. Both methods shall be utilized (except on those systems necessary for normal operations, such as the removal of drainage and underdrainage water, of the graving dock or interconnecting docks). The systems without two methods of protection in place at all times while a Navy ship is in graving dock shall be provided with a constant monitoring capability, along with provisions for a quick emergency-response capability to combat a system casualty.

5.2.3.8.1 Flooding protection for graving docks flooded through sluice gates. Graving docks flooded through sluice gates shall have a backup sluice gate installed in each flooding tunnel. If the design of the facility precludes the installation of backup sluice gates, stop logs, or similar closure devices shall be installed over the inlet of each flooding tunnel. Locks shall be provided and shall be used to secure sluice gate operators or controllers upon the completion of each docking evolution. Operators or controllers shall be locked or electrically isolated in the closed or off position and shall be tagged out until the next scheduled flooding operation, controlled maintenance operation, or inspection. Qualified operating personnel shall be present during maintenance operations or inspections of the flooding protection systems while a Navy ship is in dock. Use of a single isolation barrier should be minimized with a Navy ship in the dry dock. Prior to establishing this configuration, concurrence is required from the commander of the Navy ship (if a ship is in the dry dock) and approval is required from the commander/president (or a senior manager designated to represent the commander/president) of the shipyard/activity/company. Spaces containing secured flooding systems may be entered without qualified operators if there are securing devices such as locks which prevent the closing of breakers or the operation of handwheels or other operators. Individual control functions and positions shall be identified and clearly labeled on control consoles and other operating stations. Activities shall exercise discretion in the distribution and stowage of keys to locks securing any of the above systems or controllers or operators. The installation or operation and securing of flooding protection systems shall be reflected in the operating and maintenance procedures.

5.2.3.8.2 Flooding protection for graving docks flooded through the caisson. Graving docks flooded through the caisson shall utilize a secondary method to ensure isolation of the dock from each flooding source. Secondary or backup flood valves shall be installed in each flooding tube. If the design of the facility precludes the installation of secondary flood valves, blank covers, drop gates, or other suitable means shall be installed in or over each flooding tube. Locks shall be provided for controls or disconnects to the flooding valves and caisson dewatering pumps. Prior to the completion of each docking operation, the controls or disconnects shall be locked or electrically isolated in the closed or off position, and shall be tagged out until the next flooding operation, controlled maintenance operation, or inspection. Qualified operating personnel shall be present during maintenance operations or inspections of the flooding protection systems while a Navy ship is in dock. Spaces containing secured flooding systems may be entered without qualified operators if there are securing devices such as locks which prevent the closing of breakers or the operation of handwheels or other operators. Individual control functions and positions shall be identified and clearly labeled on control console and other operating stations. Activities shall exercise discretion in the distribution and stowage of keys to locks securing any of the above systems, controllers, or operators. The installation or operation and securing of flooding protection systems shall be reflected in the operating and maintenance procedures.

5.2.3.9 Fire protection systems. The fire protection systems installed in the graving dock, including the pump room and control station, shall be described and a system diagram provided. This description and system diagram shall include the minimum available water pressure, location of connections, location and size of fire stations and pumps, total available pump capacity, redundancies and backup features, and number, type, location, and capacity of portable extinguishers. A flow and pressure test of the fire protection system described in the FCR shall be conducted every 5 years. The test data shall be described, indicating where and under what conditions pressure and flow were measured. A record of the most recent test shall be maintained. The test shall include pumps, piping, and hoses. In addition, the capability of the system shall be demonstrated during triennial audits.

5.2.3.9.1 Requirements. The minimum available capacity for supplying a surface ship or submarine firemain (either permanently installed or temporary) shall be at least 300 gallons per minute (gal/min) per 100 feet of maximum docked ship length, except that only 300 gal/min are required for submarines less than 500 feet in length. The capacity available to serve a ship's firemain (either permanent or temporary) may also serve the fire stations in the graving dock, but in no case shall the total capacity be less than 1,000 gal/min. Where the fire protection water supplies to a submarine and the graving dock are separate, at least 300 gal/min of water shall be supplied to the submarine firemain and a minimum of 1,000 gal/min of water shall be supplied to the dock. Hull insulation fires can best be extinguished with water, preferably applied as a fog. Either of the following shall be available for fire watches assigned to hot work in areas where hull insulation on submarines is endangered.

a. A portable fresh water extinguisher of either pressure type or pump with a 2.5 gallon minimum capacity; or

b. A minimum ¾-inch hose fitted with a fog nozzle supplied from a fresh water source.

Application of a given extinguishing agent to a shipboard fire shall conform to restrictions specified in the current contract or specifications. Fresh water supply and adequate hose for complete coverage shall be available for use in the event a reactor compartment fire cannot be controlled by carbon dioxide extinguishers. Hose lines for fighting fires in way of the reactor compartment shall be restricted to fresh water sources. The pressure at the fireplug outlets shall provide a minimum nozzle pressure of 60 lbs/in^2 when supplying fire nozzles at the specified capacities at the most remote and highest elevation hose connections. Booster pumps may be used at the graving dock outlets to boost pressure to a ship's firemain (either permanently installed or temporary). A backup pumping capability shall be provided to ensure that the full water capacity for fire protection is available within 15 minutes, following the loss of the largest pumping source in the system.

5.2.3.9.2 Fire stations. Graving dock fire stations shall consist of 2½-inch hose valves with 2½-inch supply outlets and 1½-inch hose outlets. If fire protection is supplied to aircraft carriers through hoses to the carriers' salt water systems, then 4-inch outlets are required. Fire stations shall be equipped with hoses and nozzles so that any area can be reached with a 20-foot fog stream from 100 feet of hose. Fire stations serving the bottom of the graving dock shall preferably be hard piped from the water supply sources. However, portable stations that are securely lashed down and supplied by jumper hoses will be considered satisfactory in meeting this requirement.

5.2.3.9.3 Liquid fuel and electrical fires. Means shall be provided for combating liquid fuel and electrical fires in the graving dock. This requirement may be met by providing portable extinguishers or by installed systems. As a minimum, a 15-pound CO_2 extinguisher shall be located in pump rooms and other spaces having electrical equipment and a dry chemical extinguisher (18 or 27 pound type) shall be provided at locations subject to liquid fuel fires (e.g., near diesel-engine driven equipment).

5.2.3.10 Communication systems and alarms. System diagrams and descriptions shall be provided showing that the system is adequate for bringing the ship in and out of the dock, aligning the ship in the docking position, controlling flooding and dewatering, and dealing with emergency situations. The communications systems shall include both primary and alternate systems, both of which have two-way communications capability between all manned stations (dock stations, ship, pilot, tugs, security, and fire personnel). The FCR shall include a list of the types and locations of all installed alarms and shall describe how they are monitored.

5.2.3.11 Essential lighting systems. Descriptions shall be provided for lighting systems essential for the safe operation and security of the facility.

5.2.3.12 Caisson or entrance closure gate.

5.2.3.12.1 Caisson or entrance closure gate information. The following information shall be provided:

a. Drawings showing general arrangement and structure.

b. Structural calculations for steel plating and structural members shall be provided. Allowable wastage from original design shall be included in the calculations. The amount of reduction in thickness shall define the repair criteria for the steel structure. Calculations for local strength shall also consider non-uniform wastage such as deck or bulkhead plating reduced in thickness with the stiffening and framing at full thickness and vice versa.

c. Ballast-deballast systems, including pumps, piping, valves, and valve operating mechanisms. A line diagram of the pumps, valves, and piping system shall be provided.

d. Power supply.

e. Systems for through-the-caisson flooding, flooding protection, and super flooding.

f. Seals.

g. Controls, indicators, alarms (including the types and location of high and low water enunciator alarms), and communication systems.

h. Systems for removing and positioning the caisson or systems for raising or lowering the gate.

i. Backup and redundant features shall be described.

j. Corrosion protection system (both protective coating and cathodic protection, if applicable).

5.2.3.12.2 Caisson or closure gate in-place inspection, maintenance and overhaul. Caissons may have ballast tanks dewatered, while the caisson is in its seat, for inspection, maintenance, and non-structural repairs. This practice is permissible with or without a ship in the graving dock provided that the procedures and calculations are approved by the Navy and the following criteria is followed:

a. Caissons, while in place in the graving dock seat, shall contain enough water in the ballast and trim tanks so the caisson maintains negative buoyancy. Calculations proving that negative buoyancy is maintained shall be prepared and kept on file prior to dewatering caisson ballast and trim tanks with the caisson in place in the graving dock seat.

b. Written, detailed instructions or standard operating procedures have been issued by the operator for this scenario.

c. Operators shall pay close attention to maintaining double-barrier protection, in accordance with 5.2.3.8 and other safety procedures to minimize the possibility of uncontrolled flooding.

d. Ballast tanks are filled prior to flooding the graving dock.

e. There shall be no structural repairs or replacements that involve the removal of structural members of a graving dock's entrance closure while it is under load (entrance closure seated with the graving dock dewatered). This structure includes the plating, framing, truss members, breasthooks, scantlings, and support struts of a caisson or entrance closure gate.

5.2.3.13 Blocking. Descriptions of the docking blocks, block securing systems, shores, and block hauling system shall be provided that show their physical characteristics, including material and dimensions. Calculations shall be provided that demonstrate the blocking system is stable and structurally adequate (including adequate fastening) to resist ship landing, ship dead weight, wind, and seismic loads as specified in NSTM Chapter 997. Methodology on use of high blocks and cribbing shall also be provided.

5.2.3.14 Graving dock launch pontoon.

5.2.3.14.1 Graving dock launch pontoon information. The following information shall be provided:

a. Drawings showing general arrangement and structure.

b. Applicable floating dry dock structural calculations as described in 5.1.3.4.1 and complying with the material strength criteria of 5.1.3.4.1.1. The structural analysis shall include the various load cases during ship transfer and float-off and an analysis of the graving dock pontoon support structures. Analysis shall address pontoon support structure in both the raised position (supports in/near dock walls) and lowered position (supports in dock floor). Allowable wastage from original design shall be included in the calculations. The amount of reduction in thickness shall define the repair criteria for the steel structure. Calculations for local strength shall also consider non-uniform wastage such as deck or bulkhead plating reduced in thickness with the stiffening and framing at full thickness and vice versa.

c. Corrosion protection system.

d. Ballast/deballast systems.

e. Systems for movement of the pontoon within the graving dock.

f. Stability and buoyancy calculations. The minimum GM of the ship and pontoon combination shall meet the requirement shown on figure 4. The minimum operating freeboard shall be 12 inches to the lowest point on the pontoon top deck.

5.2.3.14.2 Graving dock launch pontoon structural repairs or modifications. There shall be no repairs or modifications that involve the removal of plating, framing, truss members, or scantlings while a ship is on the pontoon or the pontoon is in the raised position (supported by dock walls). Repairs or modifications shall be accomplished with the structure in an unstressed condition.

5.2.4 Operational limitations. Enclosure III of the FCR, described in Appendix A, shall contain the following information:

a. Wind, tide, and current conditions under which operations are permitted.

b. Limits of local, concentrated block loads in long tons per linear foot of blocking length, or long tons per square foot if applicable.

5.2.4.1 Pre-docking calculations. Procedures for stability and block loading calculations shall be developed in accordance with NSTM Chapter 997.

5.2.5 Surveys. Surveys shall be in accordance with 5.2.5.1 through 5.2.5.8.

5.2.5.1 Checklist. A summary checklist shall be included in the FCR. A sample checklist for material surveys is provided in Appendix F.

5.2.5.2 Observation of docking or undocking operation. The surveyor shall observe at least one complete flooding and dewatering evolution during a docking or undocking operation to determine the effectiveness of the equipment and procedures. The operation of the caisson, flooding and dewatering of the dock, and use of capstans and fittings in moving and positioning the ship shall be observed. The time required for flooding and dewatering the graving dock shall be recorded. Operation of electrical, mechanical, control, and communications systems shall be observed and any malfunctions identified.

5.2.5.3 Examination of operating logs. The operating logs shall be examined to determine if there has been an increase in pumping requirements for removal of drainage water.

5.2.5.4 Basic dock, concrete caisson and pump house structure. The walls, floor, concrete caisson, caisson seat, tunnels, altars, pump house, and other concrete work shall be inspected for the following:

a. Significant cracks. Estimate size, depth, location, and probable cause (e.g., shrinkage, structural, etc.).

b. Leakage estimate. Estimate flow rate gal/min and location, note evidence of silt or sediment in seepage.

c. Spalling. Estimate depth and area, note lack of density, exposure, and condition of structural steel and reinforcing bars.

d. Veritcal surfaces. Evidence of inward or outward movement of vertical surfaces.

e. Upward displacement. Evidence of upward displacement or settlement of floor.

f. Settlement. Evidence of settlement of soil around dock.

g. Possible voids. Evidence of possible voids under dock floor.

5.2.5.4.1 Pressure relief system. The number of relief wells and estimated flow rate of underdrainage water shall be indicated. In docks with separate underdrainage pumps, actual flow rate shall be determined and history of underdrainage flow shall be studied. If this flow has increased over the years, the cause of the increase shall be searched for and possible cavities under the dock floor shall be looked for. Sediment content of underdrainage water shall be estimated and clogged holes reported.

5.2.5.4.2 Steel caisson or entrance closure gate. The caisson or entrance closure gate shall be visually inspected for the following:

a. Structure. All structure including plating, structural members, joints, foundations, and sea chests shall be inspected. If the preservative coating appears to be blistering, flaking, or peeling, the coating shall be removed exposing the steel for inspection to determine the extent of corrosion, pitting, thinning of edges, loose rivets, cracked welding, and elongation of bolt holes. Bent, buckled, torn, or otherwise damaged structural elements shall be identified. All doubler plates shall be identified by size and location.

b. Fixed ballast. Type of material and general condition.

c. Seals. Facing condition, gasket material type and condition and backing material type and condition.

d. Deck and catwalk. General condition.

e. Gratings, vents, inclinometers, water level indicators, and other fittings. General condition.

5.2.5.4.3 Caisson hull or entrance closure gate underwater survey. A caisson underwater hull survey shall be conducted every 5 years by drydocking, diver inspection, or by inspecting the dry side and rotating the caisson and inspecting the other side. A closure gate survey shall be conducted every 5 years by lifting the gate or by diver inspection. As part of the survey, all flood water seachests, intakes and strainers shall be examined and any intakes with 25 percent or greater restriction shall be cleaned out and reported. In addition, after a caisson or closure gate is 10 years old and every 10 years thereafter, a thorough inspection of the entire hull shall be conducted by drydocking the caisson or lifting the closure gate onto dry land. If the condition of the closure rubber seal does not require replacement, the area under the seal shall be inspected from the opposite side where accessible. Inaccessible areas under the seal shall be inspected when the seal is replaced. The date of the most recent drydocking or lifting shall be reported.

5.2.5.4.4 Periodic gauging of steel caisson or entrance closure gate plating. Thickness measurements shall be taken when a caisson or closure gate is 20 years old and every 5 years thereafter. The plating of the entire hull, top deck, machinery deck, internal strength decks and bulkheads, including breast hooks, and closure gate plating and buoyancy chambers shall have measurements taken on an 8-foot grid pattern. Different locations shall be measured for each 5-year inspection. Additional measurements shall be taken to identify the full extent of unacceptable plating in areas found to have excessive wastage or areas that are suspected to be deficient by visual inspection.

5.2.5.4.5 Periodic gauging of steel caisson or entrance closure gate structure. Thickness measurements shall be taken when a caisson or closure gate is 20 years old and every 10 years thereafter. The ballast tank and machinery deck internal structural members such as plate stiffeners and truss frame members and closure gate plate stiffeners, frames and supporting members and seachests/ballast piping seaward of the first closure valve shall have measurements taken on one-third of the members. Measurements shall be taken on the webs and flanges at a maximum spacing of 6 feet along the members. A different one-third of the members shall be measured for each 10-year inspection. Additional measurements shall be taken on other members to identify the full extent of unacceptable structure in areas found to have excessive wastage or areas that are suspected to be deficient by visual inspection.

5.2.5.4.6 Periodic gauging of steel sheet pile structures. Thickness measurements shall be taken every 5 years of accessible graving dock wall, pumpwell wall or other sheet pile structures. Measurements shall be taken on an 8-foot grid pattern over the entire accessible structure. Where graving dock integrity depends upon the integrity of cellular cofferdams, inspections shall include the accessible sheet pile surfaces on the outside of the graving dock, including submerged surfaces. Different locations shall be measured for each 5-year inspection. Additional measurements shall be taken to identify the full extent of unacceptable sheet pile thickness in areas found to have excessive wastage or areas that are suspected to be deficient by visual inspection. The documentation and reporting requirements of paragraph 5.2.5.4.7 shall apply.

5.2.5.4.7 Documentation and reporting of gauging results. Drawings showing the positions of the measurements, tables showing original (designed) and current (measured) thicknesses, and percentages of wastage shall be maintained for review during the NAVSEA maintenance audits. A report shall be made to the Navy of any deficient structure found during the inspections. The report shall include a corrective action plan, a schedule for the repairs, and the safety factor (referenced to yield or buckling stress) for structural members and plating that are corroded beyond the repair criteria. Gauging results shall be included in the initial certification report as applicable.

5.2.5.5 Soil borings and piezometric surveys. Soil borings shall be carried out if either the visual inspections or records of past structural repairs indicate a significant likelihood of major structural damage, or if the design data and records of past dockings are inadequate to justify facility certification for the rated capacity desired by the operator. The piezometric survey shall be carried out in partially relieved and fully relieved graving docks. Water levels in all piezometers, when dock is dry and when it is wet shall be recorded. Standpipes may also be used to measure the water table. Water levels in floor vent holes when the dock is dry shall be recorded. If these surveys are carried out for obtaining certification, the planning, techniques and results of the surveys shall be summarized in the FCR.

5.2.5.6 Inspection of blocking. The type of blocking, bearing area, means of buildup, cribbing, and shoring shall be reported. Hauling blocks, if used, shall be checked to see that the hauling mechanism ensures freedom and is adequately supported by the substructure. Specific requirements used for fasteners and methods of fastening timber blocks, soft cap material and/or the timber portion of composite blocks shall be in accordance with Appendix K.

5.2.5.7 Inspection of electrical and mechanical systems. Electrical and mechanical systems shall be inspected in accordance with 5.2.5.7.1 through 5.2.5.7.9.

5.2.5.7.1 Detailed examination. Generators, pumps, motors, and other systems shall be opened for inspection only if, after observing them in operation, abnormal behavior is noted that justifies this action. The tests and inspections shall follow criteria and procedures furnished by the original equipment manufacturers (OEM) or technical manuals.

5.2.5.7.2 Controls. The control systems shall be inspected as follows:

a. Control panel. Check wiring, relays, bulbs, and lenses for dust collection and abrasion of wires.

b. Motor controls. Check contactors, relays, electrical and mechanical interlocks, and manual overrides.

c. Limit switches. Check panel limit switches and switch activator mechanisms.

5.2.5.7.3 Fire protection equipment. The fire protection equipment shall be checked for conformance with the requirements of 5.2.3.9. A flow and pressure test shall be conducted and data submitted. The test data shall be described, indicating where and under what conditions pressure and flow were measured.

5.2.5.7.4 Communication systems and alarms. Primary and alternate communications systems and alarms shall be checked thoroughly and tested for proper operation.

5.2.5.7.5 Flooding and pumping systems. Pumps, valves, sluice gates, sluice valves, check valves, and stop logs or gates shall be inspected and tested for proper operation. Trash racks and intake screens shall be inspected.

5.2.5.7.6 Electric power systems. The primary and alternate electric power systems shall be inspected to validate that they function as designed.

5.2.5.7.7 Draft indicators and boards. The legibility and accuracy of the draft indicators and boards shall be determined.

5.2.5.7.8 Ship positioning gear. Bitts, bollards, winches, capstans, and cleats shall be inspected for fatigue, looseness, or other signs of deterioration or excessive loading. Capstans and winches shall be checked for proper operation in all directions and speeds and for proper engagement of brakes.

5.2.5.7.9 Ventilation systems. The adequacy of the ventilation system shall be determined.

5.2.5.8 Hydrographic survey. A hydrographic survey shall be conducted in the approach channel referenced to Mean Low Water on the Atlantic coast and Mean Lower Low Water on the Pacific coast at least every 5 years and a sounding chart shall be included in the survey results. Complete tidal ranges, approach channel widths and depths, dredging frequency and any irregularities indicative of soil movement in or out of the dock areas shall be noted. Where a history of hydrographic data is available, rates of siltation shall be noted.

5.2.6 Operating procedures. In addition to the general requirements specified in 4.7.1, the operating procedures shall set forth, in sequence, the actions required by each manned operating station during the docking cycle. The procedures shall list events in step-by-step detail, commencing with prerequisite checks of dock systems, prior to flooding the dock and continuing with the events through the drydocking of the ship until the ship is secure on the blocks, the dock floor dry, pumping secured, and ship and graving dock ready for industrial work. The procedures shall also list events, commencing with prerequisite checks prior to the undocking operation and continuing until the graving dock has been pumped dry and secured. Specific flooding and dewatering procedures described herein shall be keyed to a one-line diagram of the piping and electrical systems. These operating procedures shall describe the methods of communications used between personnel at various docking stations on the dock, ship, pilot, and tugs, as applicable. Information shall also be provided describing alternate communication systems used in case of primary system failure.

5.2.6.1 Detailed requirements for graving docks. The detailed requirements for graving docks specified in the following paragraphs shall be incorporated into operating procedures and checklists. The operator of a graving dock shall establish procedures that include:

a. Lineup checklists for use at the completion of docking and undocking and throughout the lay period shall be prepared, and shall include the requirement for independent checks of the valve position by two individuals for the dewatering, flooding, and drainage systems valves. Valves or sluice gates interconnecting graving docks and valves utilized for ballasting or deballasting the caisson shall be included in these checklists.

b. Qualified personnel shall be stationed at the sluice gate operator while opening or closing the sluice gate.

c. Instructions for diver-completed block builds and diver-verified hauled block locations. The instructions shall include the requirement to properly mark blocks so that divers can easily identify them and their required orientation underwater. The instruction shall include the independent verification by two divers.

d. Instructions for the hauling of blocks during docking evolutions. The instructions shall include the requirement to properly mark hauling blocks or chains so that the marks are visible to the FOS when blocks are in the inboard and outboard positions.

5.2.6.2 Flooding precautions during the lay period. The operator shall prepare a written procedure and shall have qualified personnel readily available to maintain the dry condition of the ship and dock during the lay period. The procedure shall list the sequence of events; equipment to be used; personnel designated to respond immediately to control potentially hazardous flooding situations in the dock and aboard ship; alarms, communications and facility lighting; methods for recording valve lineup; and descriptions of the systems and equipment available for removal of water from the graving dock basin, caisson, pump house, and the ship in the dock. All equipment is to be included in the maintenance program.

5.2.6.3 Flooding drills. U.S. Navy and commercial activities with graving docks that are capable of drydocking nuclear powered ships shall conduct flooding drills every six months, simulating the failure of permanently installed drainage pump capability. Drills shall be as realistic as possible to test and assess the adequacy of response personnel and equipment. To the extent practicable, different scenarios shall be used for each drill (i.e., different graving docks, yard wide power outage, drain pump controller failure, etc.). A critique shall be conducted at the conclusion of each drill to evaluate and optimize the activity's response. Records of the drills and critiques shall be maintained and made available for review during maintenance audits.

5.3 Marine railways.

5.3.1 Facility types. Requirements of this section apply to side-haul and end-haul marine railways and associated transfer systems as applicable.

5.3.2 Certified rated capacity. The CRC shall be substantiated by selecting the largest ship, actual or maximum theoretical, that can be accommodated in the facility and demonstrating by calculations that the supporting structure, including blocking, is adequate to carry that capacity. The CRC may be limited by capacity of the weakest component, whether piles, groundways, cradle, chain, wheels, rollers, or hauling machinery.

5.3.3 Design data and physical characteristics of the facility. Design data and physical characteristics shall be in accordance with 5.3.3.1 through 5.3.3.19.

5.3.3.1 FCR content. The design data described in the following paragraphs shall be included in the FCR as specified in 4.5 and Appendix A.

5.3.3.2 Site characteristics. The following site characteristics shall be included in the FCR:

a. A general layout drawing showing tracks, water depth, and associated structures.

b. Silt accumulation rates at the rails and under the cradle.

c. Soil profiles.

5.3.3.2.1 Seismic characteristics. The following information shall be provided:

a. Listing of seismic events withstood by the facility in the past.

b. Active faults within a radius of 1 mile of the facility.

5.3.3.2.2 Seismic analysis. Seismic analysis shall be in accordance with the guidance in UFC 4-152-01 for Seismic Use Group III (equivalent to Occupancy Category IV) as modified by 4.5.3. Marine railways shall be analyzed for overturning stability using the applicable load combinations in which the dead load is reduced by a factor of 0.9 for LRFD or 0.6 for ASD. The ship weight shall be combined with the dead weight of the cradle in determining the total lateral seismic overturning moment. The piles, groundways, tracks, wheels, and cradle structure shall be analyzed for seismic performance to ensure adequacy in resisting the lateral seismic shearing forces between each of these components. Soil liquefaction shall be considered in the analysis of the groundways foundation. Mechanical and electrical components, including winch house equipment foundations and cable and pipe supports, shall be analyzed for seismic performance.

5.3.3.3 General description. Drawings and sketches shall be provided showing the structure and arrangement of groundways and their foundations, structural arrangement of cradle and equipment for block handling, rollers, chain guides, and machinery room.

5.3.3.4 Cradle weight. Cradle and blocking weight estimate shall be provided.

5.3.3.5 Stability. The stability calculations for the maximum ship shall be submitted. For the ship-cradle system shown on figure 12, the maximum wind load (F) and current load (P) shall be calculated. Stability calculations with the ship in the docked position under maximum wind conditions shall also be performed. The overturning moment shall be less than the stabilizing moment with a safety factor of 1.25.

5.3.3.6 Blocking. Descriptions of the docking blocks, block securing systems, shores, and block hauling system shall be provided that show their physical characteristics, including material and dimensions. Calculations shall be provided that demonstrate the blocking system is stable and structurally adequate (including adequate fastening) to resist ship landing, ship dead weight, hurricane, and seismic loads as specified in NSTM Chapter 997. Methodology on use of high blocks and cribbing shall also be provided.

5.3.3.7 Cradle structure. Calculations shall be provided showing the structural adequacy of the cradle and trusses to transmit the loads caused by maximum ship, via blocking, to the rollers or wheels; the adequacy of the wing structure to withstand wind and current loads on the maximum ship transmitted via the breast lines; and loads that might be caused as the maximum ship is being positioned over the blocks. The cradle structural connection to the inhaul chains or cables shall be shown.

5.3.3.7.1 Structural calculations for steel structural members. Structural calculations for steel structural members shall be provided. Allowable wastage from original design shall be included in the calculations. The amount of reduction in thickness shall define the repair criteria for the steel structure.

5.3.3.8 Rollers, wheels and bearings. Calculations shall be provided demonstrating that the rollers or wheels and bearings are adequate to carry the weight of the cradle and maximum ship.

5.3.3.8.1 Draft indicators. Draft boards shall be located on the cradle.

5.3.3.9 Groundways structure. Calculations shall be provided for the groundways structure and foundations, taking into account any deterioration of structure or foundations noticed during the material condition survey. Allowable line and grade deviation for the rails from as-designed condition shall be provided.

5.3.3.10 Essential lighting systems. System descriptions shall be provided for installed lighting systems essential for the safe operation and security of the facility.

5.3.3.11 Fire protection systems. The fire protection systems installed to combat fire in all areas of the marine railway shall be described and a diagram provided. This description and system diagram shall include minimum available water pressure; location of connections; location, and size of fire stations and pumps; total available pump capacity; redundancies and backup features and number, type, location and capacity of portable extinguishers. A flow and pressure test of the fire protection system described in the FCR shall be conducted every 5 years. The test data shall be described, indicating where and under what conditions pressure and flow were measured. A record of the most recent test shall be maintained. The test shall include pumps, piping, and hoses. In addition, the capability of the system shall be demonstrated during triennial audits.

5.3.3.11.1 Requirements. The minimum available capacity for supplying firemain shall be at least 300 gallons per minute (gal/min) per 100 feet of maximum docked ship length. The pressure at the fireplug outlets shall provide a minimum nozzle pressure of 60 lbs/in^2 when supplying fire nozzles at the specified capacities at the most remote and highest elevation hose connections. A backup pumping capability shall be provided to ensure that the full water capacity for fire protection is available within 15 minutes, following the loss of the largest pumping source in the system.

5.3.3.11.2 Fire stations. Fire stations shall be equipped with hoses and nozzles so that any area can be reached with a 20-foot fog stream from 100 feet of hose.

5.3.3.11.3 Liquid fuel and electrical fires. Means shall be provided for combating liquid fuel and electrical fires near the marine railway and in the machinery room. This requirement may be met by providing portable extinguishers or by installed systems. As a minimum, a 15-pound CO_2 extinguisher shall be located in machinery rooms and other spaces having electrical equipment and a dry chemical extinguisher (18 or 27 pound type) shall be provided at locations subject to liquid fuel fires (e.g., near diesel-engine driven equipment).

5.3.3.12 Inhaul chains or wire rope. Calculations shall be provided showing that the inhaul chains or wire rope are adequate to withstand the imposed loads. Corrosion and wear replacement criteria shall be established. The safety factor for the ultimate strength to working strength shall not be less than 2.0 for inhaul chains.

5.3.3.13 Cradle securing method. A secondary method shall be provided for securing the cradle in its normal position. This method shall be adequate to secure the cradle and docked vessel in position without relying on the inhaul system. This method shall be used in combination with the inhaul system whenever a Navy ship is on the railway.

5.3.3.14 Inhaul machinery. The operator shall provide adequate information on the inhaul machinery and controls to demonstrate that it can safely haul the maximum ship under normal conditions. The behavior of the machinery under overloading, power failure, and voluntary or involuntary sudden stops shall be described.

5.3.3.15 Electrical power systems. Sketches, diagrams, and descriptions shall be provided showing that the primary power supply is adequate for normal operation and that adequate alternate power capacity is available for the operation of all essential equipment; that is, power-operated communications, alarms, lights, fire protection systems, and vital shipboard equipment (where applicable).

5.3.3.16 Communication systems and alarms. System diagrams and descriptions shall be provided showing that the system is adequate for hauling the ship in and out of the railway dock, aligning the ship in the docking position, and dealing with emergency situations. The communications systems shall include both a primary and alternate system, both of which have two-way communications capability between all manned stations (railway stations, ship, pilot, tugs, security, and fire personnel). The FCR shall include a list of the types and locations of all installed alarms and shall describe how they are monitored.

5.3.3.17 Bilge block handling systems. The design and operation of the block handling systems shall be described.

5.3.3.18 Equipment for ship handling. The equipment used for aligning and moving the ship (before docking occurs) shall be described. Any fittings, structures, or foundations associated with this equipment that are located on the carriage shall be shown to be structurally adequate. The structure and associated fitting of transfer cradles and carriages shall be shown to be structurally adequate. The transfer towing equipment shall also be described.

5.3.3.19 Transfer system. The design and load carrying capacity of the system used for transferring a ship from railway to the work site and vice versa, shall be provided, if applicable.

5.3.4 Operational limitations. Enclosure III of the FCR, described in Appendix A, shall contain the following information:

a. Wind, tide, and current conditions under which operations are permitted. Conditions shall include any stability limitations as determined in accordance with 5.3.3.5.

b. Limits of local, concentrated block loads in long tons (LT) per linear foot of blocking length.

c. Limits of cradle travel on tracks.

5.3.5 Pre-docking calculations. Procedures for stability and block loading calculations shall be developed in accordance with 5.3.3.5 and 5.3.3.6 and NSTM Chapter 997.

5.3.6 Surveys. Surveys shall be performed in accordance with 5.3.6.1 through 5.3.6.9.

5.3.6.1 Checklist. A summary checklist shall be included in the FCR. A sample checklist for material surveys is provided in Appendix G.

5.3.6.2 Observation of marine railway in operation. The surveyor shall observe one inhaul operation and ship transfer, if applicable. The following items shall be surveyed to determine adequacy:

a. Movement of carriage on tracks.

b. Positioning and placement of rollers.

c. Movement of chains and wire rope.

d. Movement, positioning, and securing of blocks.

e. Inhaul machinery.

f. Braking systems.

g. Controls and communication systems.

5.3.6.3 Line, gauge, and grade survey. The surveyor shall conduct a line, gauge, and grade survey and inspect all underwater components of the rails. Measurements shall be taken at intervals of not more than ten feet along the entire length of all rails. Tables or drawings comparing measurements taken with as-designed line, gauge and grade will be maintained for review during NAVSEA maintenance audits. At a minimum, line, gauge, and grade survey and underwater rail survey shall be conducted every 5 years.

5.3.6.4 Structural survey. Structural surveys shall be conducted in accordance with the following requirements:

5.3.6.4.1 Groundways. Items to be inspected include:

a. Piles and caps. Check above-water portion, splash zone, and underwater portion. Check type, size, and spacing. Determine soundness of basic structure and connections.

b. Stringers. Check above-water portion, splash zone, and underwater portion.

c. Tracks and rail plate. Check general condition, measure to determine deterioration, check condition of fasteners, check track gauge, and identify variations.

d. Cross bracing. Check material condition and condition of fasteners.

e. Chain paths and guides. Check spacing and material condition.

f. Clearance under cradle. Check area under cradle for full length of cradle travel to ensure adequate clearance to ensure that it is free from obstruction.

5.3.6.4.2 Underwater survey and special inspection of steel cradle structure. When a steel cradle structure is 20 years old and every 10 years thereafter, a thorough inspection of the structure shall be conducted by lifting the entire cradle out of the water. The structure shall have thickness measurements taken in accordance with 5.3.6.4.4. If the steel cradle has timber decking, one-tenth of the decking shall be removed at equally spaced intervals and in way of structure supporting docking blocks and the condition of the fasteners and the structure beneath shall be inspected. If deficient conditions are found, additional decking shall be removed to determine the extent of the unacceptable structure. Qualified divers shall visually inspect underwater cradle structure every 2 years during the structural control inspection.

5.3.6.4.3 Underwater survey and special inspection of timber cradle structure. When a timber cradle structure is 10 years old and every 10 years thereafter, a thorough inspection of the structure shall be conducted by lifting the entire cradle out of the water. Steel connectors and other structure shall have thickness measurements taken in accordance with 5.3.6.4.5. Ten percent of the steel bolts and fasteners shall be removed for inspection. If the cradle has timber decking, it shall be removed in way of structure supporting docking blocks and the condition of the fasteners and the structure beneath shall be inspected. If deficient conditions are found, additional disassembly shall be accomplished. Qualified divers shall visually inspect underwater cradle structure every 2 years during the structural control inspection.

5.3.6.4.4 Periodic gauging of steel cradle and cradle support structure. When a steel cradle is 20 years old and every 10 years thereafter, thickness measurements shall be taken on one-third of structural members including elevated walkways. Measurements shall be taken on the webs, flanges, and on two faces of structural tubing at a maximum spacing of 6 feet along the members. A different one-third of the members shall be measured for each 10-year inspection. Additional measurements shall be taken on other members to identify the full extent of unacceptable structure in areas found to have excessive wastage or areas that are suspected to be deficient by visual inspection.

5.3.6.4.5 Periodic inspection of timber cradle and cradle support structure and gauging of steel components. When a timber cradle is 10 years old and every 10 years thereafter, 5 percent of the steel bolts and fasteners shall be removed for inspection. If the cradle has timber decking, one-tenth of the decking shall be removed at equally spaced intervals and in way of structure supporting keel blocks and the condition of the fasteners and the structure beneath shall be inspected. If deficient conditions are found, additional decking and fasteners shall be removed to determine the extent of the unacceptable structure. Thickness measurements shall be taken on one-third of steel plates and gussets connecting timber members and other steel structural members including elevated walkways as specified in 5.3.6.4.4. Steel plate and gusset connectors less than 6 feet long shall have a minimum of 2 measurements taken on each gauged element. Additional measurements shall be taken to identify the full extent of unacceptable structure in areas found to have excessive wastage or areas that are suspected to be deficient by visual inspection.

5.3.6.4.6 Documentation and reporting of gauging results. Drawings showing the positions of the measurements, tables showing original (designed) and current (measured) thicknesses, and percentages of wastage shall be maintained for review during the maintenance audits. A report shall be made to the Navy of any deficient structure found during the inspections. The report shall include a corrective action plan, a schedule for the repairs, and the safety factor (referenced to yield or buckling stress) for structural members and plating that are corroded beyond the repair criteria. Gauging results shall be included in the initial certification report as applicable.

5.3.6.5 Inspection of blocking. The type of blocking, bearing area, means of buildup, cribbing, and shoring shall be reported. Hauling blocks, if used, shall be checked to see that the hauling mechanism ensures freedom and is adequately supported by the substructure. Specific requirements used for fasteners and methods of fastening timber blocks, soft cap material and/or the timber portion of composite blocks shall be in accordance with Appendix K.

5.3.6.6 Inspection of electrical and mechanical systems. Electrical and mechanical systems shall be inspected in accordance with 5.3.6.6.1 through 5.3.6.6.7.

5.3.6.6.1 Wheels, rollers and roller frames. Wheels, rollers, and roller frames shall be inspected as follows:

a. Check lubrication, axle diameter, wheel diameter and flange size, bearings, and grease grooves or oil lines.

b. Check roller size and diameter and determine evidence of uneven wear and other defects.

c. Inspect material condition of frames and spacers.

5.3.6.6.2 Chains and wire ropes. Inhaul and outhaul chains and wire rope shall be inspected to determine the status of cleaning, lubrication, fit, and percentage wear. The inhaul and transfer sheaves shall be checked for defects and deterioration. The condition of bearings and the means of anchoring shall also be inspected. Inhaul and outhaul chains shall be gauged for wear and corrosion every 5 years. The cradle sheaves and inhaul and outhaul attachments shall be visually inspected during the annual control inspection. Wire rope shall be thoroughly inspected prior to initial certification and every 5 years thereafter and shall meet the requirements of NAVFAC P-307.

5.3.6.6.3 Hauling gear. The hauling machinery shall be inspected for condition, lubrication, fit, and method of anchoring. Items to be inspected shall include:

a. Electric motor. Note horsepower, amperage, voltage, phases, revolutions per minute, and compare with manufacturer's design parameters.

b. Diesel or gasoline engine.

c. Steam or compressed air drives.

d. Gears.

e. Wildcat. Check for sprocket wear, chain slippage, and other defects.

f. Wire rope drum. Check wire rope lay and defects in spool flange.

g. Locking pawls. Check pin connection.

h. Speed controllers, circuit breakers, and switches. Check wiring, watertightness, and evidence of overheating.

i. Electric and hand brakes. Check shoe lining and drum.

5.3.6.6.4 Fire protection equipment. The fire protection equipment shall be checked for conformance with the requirements of 5.3.3.11. A flow and pressure test shall be conducted and data submitted. The test data shall be described, indicating where and under what conditions pressure and flow were measured.

5.3.6.6.5 Block handling systems. The block handling systems shall be observed in operation and shall be inspected.

5.3.6.6.6 Electric power systems. The primary and alternate electric power systems shall be inspected and their adequacy determined.

5.3.6.6.7 Communication systems and alarms. Primary and alternate communications systems and alarms shall be checked thoroughly and tested for proper operation.

5.3.6.7 Draft boards. The legibility and accuracy of the draft boards shall be checked.

5.3.6.8 Mooring equipment and fittings. The adequacy of mooring equipment and fittings shall be determined.

5.3.6.9 Hydrographic survey. A hydrographic survey shall be conducted in the approach channel referenced to Mean Low Water on the Atlantic coast and Mean Lower Low Water on the Pacific coast at least every 5 years and a sounding chart shall be included in the survey results. Complete tidal ranges, approach channel widths and depths, dredging frequency and any irregularities indicative of soil movement into or out of the railway area shall be noted. Where a history of hydrographic data is available, rates of siltation shall be noted.

5.3.7 Operating procedures. In addition to the general requirements specified in 4.7.1, the operating procedures shall set forth, in sequence, the actions required by each manned operating station during the docking cycle. The procedures shall list events in step-by-step detail, commencing with prerequisite checks of railway subsystems, prior to outhauling the cradle for receiving the ship, and continuing with the events through landing of the ship and inhaul until the ship is secured on the marine railway and ready for industrial work. The procedures shall also list events, commencing with prerequisite checks prior to the outhaul operation and continuing until the empty cradle has been retrieved. These operating procedures shall describe the methods of communications used between personnel at various stations on the marine railway, ship, pilot, and tugs. Information shall be provided describing alternate communication systems used in case of primary system failure.

Operating procedures for transferring a ship onto or off of the railway cradle shall be provided, if applicable.

5.3.7.1 Detailed requirements for marine railways. The detailed requirements for marine railways specified in the following paragraphs shall be incorporated into operating procedures and checklists. The operator of a marine railway shall establish procedures that include:

a. Instructions for diver-completed block builds and diver-verified hauled block locations. The instructions shall include the requirement to properly mark blocks so that divers can easily identify them and their required orientation underwater.

b. Instructions for the hauling of blocks during docking evolutions. The instructions shall include the requirement to properly mark hauling blocks or chains so that the marks are visible to the FOS when blocks are in the inboard and outboard positions.

5.4 Vertical lifts.

5.4.1 Facility types. Requirements of this section apply to facilities that lift a ship vertically by mechanical means rather than buoyancy.

5.4.2 Certified rated capacity. The CRC shall be substantiated by selecting the largest ship, actual or maximum theoretical, that can be accommodated in the facility and demonstrating by calculations that the platform, blocking, and hoist mechanisms are adequate for lifting, and the ship transfer system is adequate for hauling and supporting that capacity.

5.4.3 Design data and physical characteristics of the facility. Design data and physical characteristics shall be in accordance with 5.4.3.1 through 5.4.3.17.

5.4.3.1 FCR content. The design data described in the following paragraphs shall be included in the FCR as specified in 4.5 and Appendix A.

5.4.3.2 Site characteristics. A general layout of the site shall be provided that shows the water depth, vertical lift, and land structures.

5.4.3.2.1 Seismic characteristics. The following information shall be provided:

a. Listing of seismic events withstood by the facility in the past.

b. Active faults within a radius of 1 mile of the facility.

5.4.3.2.2 Seismic analysis. Seismic analysis shall be in accordance with the guidance in UFC 4-152-01 for Seismic Use Group III (equivalent to Occupancy Category IV) as modified by 4.5.3. The platform portion of a vertical lift will generally not be subjected to seismic loading. The winch hoists and their support structure shall be analyzed for seismic performance. Soil liquefaction shall be considered in the analysis of the support structure foundation.

5.4.3.3 General arrangement. Drawings and sketches shall be provided showing the platform, hoist, structure, foundations supporting the hoists, blocks and equipment for block handling, and control stations.

5.4.3.4 Blocking. Descriptions of the docking blocks, block securing systems, shores, and block hauling system shall be provided that show their physical characteristics, including material and dimensions. Calculations shall be provided that demonstrate the blocking system is stable and structurally adequate (including adequate fastening) to resist ship landing, ship dead weight, hurricane, and seismic loads as specified in NSTM Chapter 997. Methodology on use of high blocks and cribbing shall also be provided.

5.4.3.5 Platform. Drawings shall be furnished showing the material and dimensions of platform structure. Calculations shall be submitted showing the load that the platform can carry per foot of length. This value shall be compared with the maximum load per foot of length exerted by the maximum ship.

5.4.3.5.1 Structural calculations. Structural calculations for steel structural members shall be provided. Allowable wastage from original design shall be included in the calculations. The amount of reduction in thickness shall define the repair criteria for the steel structure.

5.4.3.6 Hoists. The design of the hoist system shall be described, including the following characteristics:

a. Lifting capacity.

b. Lifting speed.

c. Method of synchronization of lifting speeds of all motors.

d. Overload protection.

5.4.3.7 Wire rope and chains. The strength of the wire rope and chains shall be defined in terms of their adequacy to withstand dynamic loading caused by sudden changes in speed.

5.4.3.8 Braking system. The design and capabilities of the braking system shall be described.

5.4.3.9 Structure supporting hoists. Drawings shall be provided that shows the structure supporting the hoists, including foundations.

5.4.3.10 Transfer system. The design and load carrying capacity of the system used for transferring a ship from platform to the work site and vice versa, shall be provided, if applicable.

5.4.3.11 Control systems. The control systems shall be described.

5.4.3.12 Electrical power systems. Sketches, diagrams, and descriptions shall be provided showing that the primary power supply is adequate for normal operation and that adequate alternate power capacity is available for the operation of all essential equipment; that is, power-operated communications, alarms, lights, fire protection systems, auxiliary drainage systems, and vital shipboard equipment (where applicable).

5.4.3.13 Communication systems and alarms. System diagrams and descriptions shall be provided showing that the system is adequate for bringing the ship in and out of the lift, aligning the ship in the docking position, controlling both lifting and lowering, and dealing with emergency situations. The communications systems shall include both primary and alternate systems, both of which have two-way communications capability between all manned stations (lift stations, ship, pilot, tugs, security, and fire personnel). The FCR shall include a list of the types and locations of all installed alarms and shall describe how they are monitored.

5.4.3.14 Essential lighting systems. Descriptions shall be provided for lighting systems essential for the safe operation and security of the facility.

5.4.3.15 Fire protection systems. The fire protection systems installed to combat fire in all areas of the vertical lift shall be described and a diagram provided. This description and system diagram shall include minimum available water pressure; location of connections; location and size of fire stations and pumps; total available pump capacity; redundancies and backup features and number, type, location, and capacity of portable extinguishers. A flow and pressure test of the fire protection system described in the FCR shall be conducted every 5 years. The test data shall be described, indicating where and under what conditions pressure and flow were measured. A record of the most recent test shall be maintained. The test shall include pumps, piping, and hoses. In addition, the capability of the system shall be demonstrated during triennial audits.

5.4.3.15.1 Requirements. The minimum available capacity for supplying firemain shall be at least 300 gallons per minute (gal/min) per 100 feet of maximum docked ship length. The pressure at the fireplug outlets shall provide a minimum nozzle pressure of 60 lbs/in^2 when supplying fire nozzles at the specified capacities at the most remote and highest elevation hose connections. A backup pumping capability shall be provided to ensure that the full water capacity for fire protection is available within 15 minutes, following the loss of the largest pumping source in the system.

5.4.3.15.2 Fire stations. Fire stations shall be equipped with hoses and nozzles so that any area can be reached with a 20-foot fog stream from 100 feet of hose.

5.4.3.15.3 Liquid fuel and electrical fires. Means shall be provided for combating liquid fuel and electrical fires on the platform. This requirement may be met by providing portable extinguishers or by installed systems. As a minimum, a 15-pound CO2 extinguisher shall be located in spaces having electrical equipment and a dry chemical extinguisher (18 or 27 pound type) shall be provided at locations subject to liquid fuel fires (e.g., near diesel engine-driven equipment).

5.4.3.16 Deflection measuring system. A description of the platform deflection measuring system, if applicable, shall be provided.

5.4.3.17 Equipment for ship handling. The equipment used for aligning the ship on the platform shall be described. The structure and associated fittings of the transfer cradle and carriage shall be shown to be structurally adequate. The transfer towing equipment shall also be described.

5.4.4 Operational limitations. Enclosure III of the FCR, described in Appendix A, shall contain the following information:

a. Wind, tide, and current conditions under which operations are permitted.

b. Limits of local, concentrated block loads in long tons (LT) per linear foot of blocking length.

c. Limits on platform deflection, if applicable.

d. Limits on electrical current being drawn by machinery.

e. Limits on individual hoist loading.

5.4.5 Pre-docking calculations. Procedures for stability and block loading calculations shall be developed in accordance with NSTM Chapter 997. The stability calculations for the maximum ship shall be submitted. For the ship-platform system, the maximum wind load and current load shall be calculated. The overturning moment shall be less than the stabilizing moment.

5.4.6 Surveys. Surveys shall be performed in accordance with 5.4.6.1 through 5.4.6.12.

5.4.6.1 Checklist. A summary checklist shall be included in the FCR. A sample checklist for material surveys is provided in Appendix H.

5.4.6.2 Observation of vertical lift in operation. One complete docking or undocking and ship transfer cycle, if applicable, shall be observed by the surveyor to determine the effectiveness of the equipment, personnel and procedures.

5.4.6.3 Hoists. Unusual running noises, status of means for corrosion prevention, lubrication and damage or misaligned parts shall be noted. Wire rope with two or more broken wires shall be considered unsatisfactory. Wire rope from the same lot and with the same environmental exposure as the wire rope used for all hoists shall be pull tested until it breaks. This test is required for initial certification and every 10 years thereafter. If it breaks at 90 percent or less of the designed breaking strength, it and all wire rope of equal age shall be considered unsatisfactory. Bearings, pawl mechanisms, brakes, and gears shall be inspected. Soundness of bolts and foundation shall be checked. Wire rope shall be thoroughly inspected prior to initial certification and every 5 years thereafter and shall meet the requirements of Appendix D of NAVFAC P-307.

5.4.6.4 Platform. Soundness of basic structure and effectiveness of means for corrosion prevention shall be checked. A test of 110 percent of the CRC of the facility through the full range of operation shall be observed by the surveyor. The requested CRC may need to be reduced in order to perform this test. Cradle load testing shall be conducted every 5 years.

5.4.6.5 Controls. The control systems shall be inspected as follows:

a. Control panel. Check wiring, relays, bulbs, and lenses for dust collection and abrasion of wires.

b. Motor controls. Check contacts, relays, electrical and mechanical interlocks, and manual overrides.

c. Limit switches. Check panel limit switches and switch actuators.

5.4.6.6 Inspection of blocking. The type of blocking, bearing area, means of buildup, cribbing, and shoring shall be reported. Hauling blocks, if used, shall be checked to see that the hauling mechanism ensures freedom and is adequately supported by the substructure. Specific requirements used for fasteners and methods of fastening timber blocks, soft cap material, and/or the timber portion of composite blocks shall be in accordance with Appendix K.

5.4.6.7 Electrical power systems. The primary and alternate electric power systems shall be inspected and their adequacy determined.

5.4.6.8 Communication systems and alarms. Primary and alternate communications systems and alarms shall be checked thoroughly and tested for proper operation.

5.4.6.9 Fire protection equipment. The fire protection equipment shall be checked for conformance with the requirements of 5.4.3.15. A flow and pressure test shall be conducted and data submitted. The test data shall be described, indicating where and under what conditions pressure and flow were measured.

5.4.6.10 Deflection measuring system. If installed, the deflection measuring system shall be inspected and its accuracy shall be determined.

5.4.6.11 Hydrographic survey. A hydrographic survey shall be conducted underneath the platform and in the approach channel referenced to Mean Low Water on the Atlantic coast and Mean Lower Low Water on the Pacific coast at least every 5 years and a sounding chart shall be included in the survey results. Complete tidal ranges, approach channel widths and depths, dredging frequency, and any irregularities indicative of soil movement in or out of the platform areas shall be noted. Where a history of hydrographic data is available, rates of siltation shall be noted.

5.4.6.12 Periodic gauging of steel platform and cradle structure. When a platform is 20 years old and every 10 years thereafter, thickness measurements of the steel shall be taken on one-third of structural members including elevated walkways. Measurements shall be taken on the webs and flanges of structural members at a maximum spacing of 6 feet along the members. A different one-third of the members shall be measured for each 10-year inspection. Additional measurements shall be taken on other members to identify the full extent of unacceptable structure in areas found to have excessive wastage or areas that are suspected to be deficient by visual inspection.

5.4.6.12.1 Documentation and reporting of gauging results. Drawings showing the positions of the measurements, tables showing original (designed) and current (measured) thicknesses, and percentages of wastage shall be maintained for review during the NAVSEA maintenance audits. A report shall be made to the Navy of any deficient structure found during the inspections. The report shall include a corrective action plan, a schedule for the repairs, and the safety factor (referenced to yield or buckling stress) for structural members and plating that are corroded beyond the repair criteria. Gauging results shall be included in the initial certification report as applicable.

5.4.7 Operating procedures. In addition to the general requirements specified in 4.7.1, the operating procedures shall set forth, in sequence, the actions required by each manned operating station during the docking cycle. The procedures shall list events in step-by-step detail, commencing with prerequisite checks of the vertical lift subsystems prior to lowering the platform for receiving the ship and continuing with the events through landing the ship, lifting the platform, transferring the ship to the work berth, and securing the operation for industrial work. The procedures shall also list events, commencing with prerequisite checks prior to the undocking operation and continuing through transfer, lowering the platform to refloat the ship and raising the platform to its secured position. These procedures shall describe the methods of communications used between personnel at various docking stations of the vertical lift, ship, pilot, and tugs, as applicable. Information shall be provided describing alternate communication systems used in case of primary system failure.

5.4.7.1 Detailed requirements for operating vertical lifts. The detailed requirements for vertical lifts specified in the following paragraphs shall be incorporated into operating procedures and checklists. The operator of a vertical lift shall establish procedures which include:

a. Instructions for diver-completed block builds and diver-verified hauled block locations. The instructions shall include the requirement to properly mark blocks so that divers can easily identify them and their required orientation underwater.

b. Instructions for the hauling of blocks during docking evolutions. The instructions shall include the requirement to properly mark hauling blocks or chains so that the marks are visible to the FOS when blocks are in the inboard and outboard positions.

5.5 Transfer and launch ways.

5.5.1 Facility types. Requirements of this section apply to inclined ways for end or side launching and to transfer ways that utilize floating dry docks, marine railways, vertical lifts, or graving dock launch pontoons. For transfer ways employing modular construction methods, only that area where the final assembly of the ship takes place prior to launching including the transfer system used to move the ship to the launching area or launch ways (if applicable) is subject to the requirements of this document.

5.5.2 Certified rated capacity. The CRC shall be determined by the load bearing capability of the blocks and the supporting structure. The load bearing capability shall be substantiated by calculations and historical data. In the case of launch ways, the capacity may be stated in terms of the permissible load in long tons per linear foot of the launch ways. In the case of transfer ways, the capacity may be stated in terms of permissible load per square foot of area or in long tons per linear foot of transfer rails.

5.5.3 Design data and physical characteristics of the facility. Design data and physical characteristics shall be in accordance with 5.5.3.1 through 5.5.3.14.

5.5.3.1 FCR content. The design data described in the following paragraphs shall be included in the FCR as specified in 4.5 and Appendix A.

5.5.3.2 General description. Drawings and sketches shall be provided showing the structural arrangement and layout of the facility, including arrangement of tracks for cranes and ship and module transfer systems, if applicable. The structural arrangement descriptions shall include information on concrete slab thickness, reinforcement locations and sizes, foundation details on type and sizes, location of piles, and the inclination or camber of ways, if applicable.

5.5.3.3 Site characteristics. The following site characteristics shall be provided with the design data.

5.5.3.3.1 General geology. A brief description shall be provided of the geology and geological formations of the site.

5.5.3.3.2 Soil characteristics. A general description of the predominant soil types shall be provided. Boring logs (soil profiles and laboratory test data) shall be included.

5.5.3.3.3 Results of special geotechnical studies. Results of past geotechnical studies, conducted to determine reasons for settlement or voids, shall be provided. The Navy may require additional geotechnical studies and surveys prior to certification if the survey results presented by the surveyor indicate the necessity for these studies.

5.5.3.3.4 Seismic characteristics. The following information shall be provided:

a. Listing of seismic events withstood by the facility in the past.

b. Active faults within a radius of 1 mile of the facility.

5.5.3.3.5 Seismic analysis. Seismic analysis shall be in accordance with the guidance in UFC 4-152-01 for Seismic Use Group III (equivalent to Occupancy Category IV) as modified by 4.5.3. The groundways of inclined and level building and launch ways shall be analyzed for seismic performance. Soil liquefaction shall be considered in the analysis of the groundways foundation.

5.5.3.4 Structural analyses. Structural analyses that show that the facility is certifiable in its present state shall be included.

5.5.3.4.1 Loads. Load estimates used in analyses shall be documented. Special loads, such as the pivoting loads on the transfer or launch ways, shall be defined.

5.5.3.4.2 Properties of structural materials. Properties of structural materials used in analyses shall be included.

5.5.3.4.3 Acceptance criteria. Justification shall be provided for the allowable stresses and deflections used in evaluating results of analyses.

5.5.3.5 Keel tracks, transfer rails, blocks and bilge cribbing. Calculations shall be provided that demonstrate the blocking system is stable and structurally adequate (including adequate fastening) to resist ship dead weight, hurricane, and seismic loads as specified in NSTM Chapter 997. Methodology on use of high blocks and cribbing shall also be provided. Information on keel tracks, transfer rails, blocks, and bilge cribbing shall be submitted as follows:

a. Typical designs of keel tracks, blocks, and bilge cribbing.

b. Load-bearing capabilities of keel tracks, transfer rails, blocks, and bilge cribbing.

c. Typical arrangement of these ship supports in relation to pile locations and pivot loads.

d. Systems for settlement detection.

5.5.3.6 Ground ways and launch ways. Typical designs of ground ways and launch ways shall be provided, including ship weight transfer systems such as sand blocks or companion wedges in bilge cribs. Specific information on the kinds and amounts of lubricants, method of application, and estimated coefficients of static and sliding friction shall also be submitted.

5.5.3.6.1 Transfer rails. Typical design of transfer rails shall be provided including alignment and elevation tolerances for the rails on the transfer way and other system components including floating dry docks, lift platforms, marine railways, and graving dock launch pontoons.

5.5.3.7 Release mechanisms. The design and arrangement of triggers or burn-off plates shall be provided. Safety features shall be described.

5.5.3.8 Equipment for ship and module transfer. The structure and associated fittings of the transfer cradle and carriage shall be shown to be structurally adequate. The transfer towing equipment shall also be described. The design of carriages shall be described and their load-bearing capabilities substantiated.

5.5.3.9 Fire protection systems. The fire protection systems installed to combat fire in all areas of the transfer and launch ways shall be described and a diagram provided. This description and system diagram shall include minimum available water pressure; location of connections; location and size of fire stations and pumps; total available pump capacity; redundancies and backup features and number, type, location, and capacity of portable extinguishers. A flow and pressure test of the fire protection system described in the FCR shall be conducted every 5 years. The test data shall be described, indicating where and under what conditions pressure and flow were measured. A record of the most recent test shall be maintained. The test shall include pumps, piping and hoses. In addition, the capability of the system shall be demonstrated during triennial audits.

5.5.3.9.1 Requirements. The minimum available capacity for supplying a surface ship's or submarine's firemain shall be at least 300 gallons per minute (gal/min) per 100 feet of maximum ship length. The pressure at the fireplug outlets shall provide a minimum nozzle pressure of 60 lbs/in^2 when supplying fire nozzles at the specified capacities at the most remote and highest elevation hose connections. A backup pumping capability shall be provided to ensure that the full water capacity for fire protection is available within 15 minutes, following the loss of the largest pumping source in the system.

5.5.3.9.2 Fire stations. Fire stations shall be equipped with hoses and nozzles so that any area of the building way can be reached with a 20-foot fog stream from 100 feet of hose.

5.5.3.9.3 Liquid fuel and electrical fires. Means shall be provided for combating liquid fuel and electrical fires in the facility. This requirement may be met by providing portable extinguishers or by installed systems. As a minimum, a 15-pound CO_2 extinguisher shall be located in spaces having electrical equipment and a dry chemical extinguisher (18 or 27 pound type) shall be provided at locations subject to liquid fuel fires (e.g., diesel engine-driven equipment).

5.5.3.10 Communication systems and alarms. System diagrams and descriptions shall be provided showing that the system is adequate for all normal transfer and launch way operations and emergency situations. The communications systems shall include both primary and alternate systems, both of which have two-way communications capability between all manned stations (control stations, ship, pilot, tugs, security, and fire personnel). The FCR shall include a list of the types and locations of all installed alarms and shall describe how they are monitored.

5.5.3.11 Essential lighting systems. Descriptions shall be provided for lighting systems essential for the safe operation and security of the facility.

5.5.3.12 Electrical power systems. Sketches, diagrams, and descriptions shall be provided showing that the primary power supply is adequate for normal operation and that adequate alternate power capacity is available for the operation of all essential equipment; that is, power-operated communications, alarms, lights, fire protection systems, auxiliary drainage systems, and vital shipboard equipment (where applicable).

5.5.3.13 Drainage system. The drainage system and its capabilities shall be described.

5.5.3.14 Dry dock landing grid. Design data and description shall be provided for dry dock landing grid.

5.5.4 Operational limitations. Enclosure III of the FCR, described in Appendix A shall contain the following information:

a. Wind, tide, and current conditions under which operations are permitted.

b. Safe carriage speeds for ship transfer, if applicable.

c. Deceleration systems, such as drag chains, if applicable.

d. Limits of local, concentrated block loads in long tons (LT) per linear foot of blocking length.

5.5.5 Pre-transfer calculation. Procedure for stability and block loading calculations shall be developed in accordance with NSTM Chapter 997.

5.5.6 Surveys. Surveys shall be in accordance with 5.5.6.1 through 5.5.6.7.

5.5.6.1 Checklist. A summary checklist shall be included in the FCR. A sample checklist for material surveys is provided in Appendix I.

5.5.6.2 Observation of launching or transfer. If it can be scheduled, the surveyor should observe a ship launching or transfer to determine the effectiveness of the equipment and procedures.

5.5.6.3 Structural survey. Structural surveys shall be conducted in accordance with 5.5.6.3.1 through 5.5.6.3.4.

5.5.6.3.1 Slabs. Slabs, including inclined ways, shall be checked for evidence of cracking, spalling, settlement, or upward movement. Causes shall be investigated and the need for detailed examination of soil and foundations shall be assessed. A declivity survey of inclined ways shall be conducted every 5 years.

5.5.6.3.2 Tracks. Split rails, head separation, and soundness of joints shall be checked. Deflections and settlement of tracks and pavement shall be examined. A line and grade survey shall be conducted every 5 years.

5.5.6.3.3 Inspection of blocking. The type of blocking, bearing area, means of buildup, cribbing, and shoring shall be reported. Specific requirements used for fasteners and methods of fastening timber blocks, soft cap material, and/or the timber portion of composite blocks shall be in accordance with Appendix K.

5.5.6.3.4 Survey of dry dock landing grid. Dry dock landing grid shall be visually inspected for adequacy. The inspection of the landing grid shall be conducted for initial certification and every 5 years thereafter.

5.5.6.4 Survey of electrical and mechanical systems. Electrical and mechanical systems shall be inspected in accordance with 5.5.6.4.1 through 5.5.6.4.6.

5.5.6.4.1 Detailed examination. Generators, pumps, motors, and other systems shall be opened for inspection only if, after observing them in operation, abnormal behavior is noted that justifies this action. The tests and inspections shall follow criteria and procedures furnished by the original equipment manufacturers (OEM) or technical manuals.

5.5.6.4.2 Fire protection equipment. The fire protection equipment shall be checked for conformance with the requirements of 5.5.3.9. A flow and pressure test shall be conducted and data submitted. The test data shall be described, indicating where and under what conditions pressure and flow were measured.

5.5.6.4.3 Communication systems and alarms. Communications systems and alarms shall be checked thoroughly and tested for proper operation.

5.5.6.4.4 Electric power systems. Electrical equipment shall be observed in operation. The adequacy of power supply and distribution systems shall be determined.

5.5.6.4.5 Transfer systems. Carriage, frames, wheels, rollers, and propulsion systems shall be checked for adequacy, if applicable.

5.5.6.4.6 Launching mechanism. Connections to the shipway and the trigger assemblies or burn-off plates shall be inspected.

5.5.6.5 Hydrographic survey. A hydrographic survey shall be conducted at the launch site and in the approach channel referenced to Mean Low Water on the Atlantic coast and Mean Lower Low Water on the Pacific coast at least every 5 years and a sounding chart shall be included in the survey results. Complete tidal ranges, approach channel widths and depths, dredging frequency, and any irregularities indicative of soil movement into or out of the launching area shall be noted. For inclined ways for end or side launching, the water depth at the launch site shall be verified and compared to the most recent hydrographic survey to ensure adequate water depth prior to each launching. For transfer ways that utilize floating dry docks, graving dock launch pontoons, marine railways, or vertical lifts, the hydrographic survey requirements are specified 5.1, 5.2, 5.3, and 5.4 respectively for each type of facility.

5.5.6.6 Periodic gauging of steel sheet pile structures. Thickness measurements shall be taken every 5 years of building way walls or other sheet pile structures. Measurements shall be taken on an 8-foot grid pattern over the entire structure. Different locations shall be measured for each 5-year inspection. Additional measurements shall be taken to identify the full extent of unacceptable sheet pile thickness in areas found to have excessive wastage or areas that are suspected to be deficient by visual inspection.

5.5.6.7 Documentation and reporting of gauging results. Drawings showing the positions of the measurements, tables showing original (designed) and current (measured) thicknesses, and percentages of wastage shall be maintained for review during the NAVSEA maintenance audits. A report shall be made to the Navy of any deficient structure found during the inspections. Gauging results shall be included in the initial certification report as applicable.

5.5.7 Operating procedures. In addition to the general requirements specified in 4.7.1, the operating procedures shall set forth, in sequence, the actions required by each manned station during the operation. The procedures shall list events in step-by-step detail, commencing with prerequisite checks and continuing through the launching or transfer of the ship. These operating procedures shall describe the methods of communications used between personnel at various stations on the ways, ship, pilot, and tugs, as applicable. Information shall also be provided describing alternate communication systems used in case of primary system failure. They shall also include procedures for removing blocks and shores, for removing grease irons, for wedging up, and for letting go, as applicable.

6. NOTES

(This section contains information of a general or explanatory nature that may be helpful, but is not mandatory.)

6.1 Intended use. The criteria covered in this standard are intended to determine the suitability of a facility for docking, launching, or transferring U.S. Navy ships. The criteria is military unique in that there is no commercial equivalent.

6.2 Acquisition requirements. Acquisition documents should specify the following:

a. Title, number, and date of this standard.

b. FCR submission as required (see 4.3.3.5 and 6.4).

6.3 Guidance documents. The documents listed below provide useful information on facility design, maintenance, and operation. This information may be utilized in preparing the FCRs and defining survey requirements.

DEPARTMENT OF DEFENSE (DOD)

UFC 1-200-01	-	General Building Requirements
UFC 3-220-01A	-	Deep Foundations
UFC 3-220-01N	-	Geotechnical Engineering Procedures for Foundation Design of Buildings and Structures
UFC 3-220-03FA	-	Soils and Geology Procedures for Foundation Design of Buildings and Other Structures
UFC 3-220-04FA	-	Backfill for Subsurface Structures
UFC 3-220-05	-	Dewatering and Groundwater Control
UFC 3-220-06	-	Grouting Methods and Equipment
UFC 3-220-10N	-	Soil Mechanics
UFC 3-300-10N	-	Structural Engineering, with Changes 1&2
UFC 3-310-01	-	Structural Load Data, with Change 2

UFC 3-310-02A	-	Structural Design Criteria for Buildings
UFC 3-310-04	-	Seismic Design for Buildings
UFC 3-320-01A	-	Welding -- Design Procedures and Inspections
UFC 3-320-05A	-	Structural Design Criteria for Structures Other Than Buildings
UFC 3-320-06A	-	Concrete Floor Slabs on Grade Subjected to Heavy Loads
UFC 3-501-03N	-	Electrical Engineering Preliminary Considerations
UFC 3-550-03N	-	Power Distribution Systems
UFC 3-570-02A	-	Cathodic Protection
UFC 3-570-02N	-	Electrical Engineering Cathodic Protection
UFC 3-570-06	-	O&M: Cathodic Protection Systems
UFC 3-600-01	-	Fire Protection Engineering for Facilities
UFC 3-600-02	-	O&M: Inspection, Testing, and Maintenance of Fire Protection Systems
UFC 4-150-02	-	Dockside Utilities for Ship Service, with Change 3
UFC 4-150-06	-	Military Harbors and Coastal Facilities
UFC 4-150-07	-	Maintenance and Operation: Maintenance of Waterfront Facilities
UFC 4-150-08	-	Inspection of Mooring Hardware
UFC 4-151-10	-	General Criteria for Waterfront Construction
UFC 4-152-01	-	Design: Piers and Wharves
UFC 4-159-02	-	Engineering and Design of Military Ports
UFC 4-159-03	-	Design: Moorings
UFC 4-213-10	-	Design: Graving Drydocks
UFC 4-213-12	-	Drydocking Facilities Characteristics

NAVAL FACILITIES ENGINEERING COMMAND (NAVFAC)

NAVFAC P-307	-	Management of Weight Handling Equipment
NCEL TR-939	-	Seismic Design of Waterfront Retaining Structures
NCEL TR-2039-OCN	-	Design Guide for Pile Driven Plate Anchors
NCEL TR-6012-OCN Rev B	-	U.S. Navy Heavy Weather Mooring Safety Requirements

NAVAL SEA SYSTEMS COMMAND (NAVSEA)

NAVSEA DDS 100-1	-	Strength of Structural Members
NAVSEA DDS 582-1	-	Calculations for Mooring Systems

6.4 FCR submission. The operator of a Navy facility should submit three copies of the FCR to NAVSEA. The operator of a commercial facility should submit four copies of the FCR to the cognizant SUPSHIP/RMC, who will retain one copy and forward three copies to NAVSEA. All FCRs, drawings and other required data should be submitted to NAVSEA by paper copy. For planning purposes, it may be estimated that the Navy review process of an FCR will require four months. The three NAVSEA copies should be sent to the following offices:

a. One copy should be mailed to the following address:
Department of the Navy
Naval Sea Systems Command
Attn: Mr. Rick Weiser (SEA 04XQ21)
1333 Isaac Hull Avenue, SE Stop 4051
Washington Navy Yard, DC 20376-4051

b. Two copies should be mailed to the following address:
NAVSEA Programs Field Office
Attn: Mr. George Ruple (SEA 04XQ2X)
1661 Redbank Rd., Suite 202
Goose Creek, SC 29445-6511

6.5 Subject term (key word) listing.

Certified Rated Capacity (CRC)

Dockmaster

Floating dock

Graving dock

Launching pontoon

Launch way

Maintenance program

Marine railway

Transfer way

Vertical lift

6.6 Changes from previous issue. Marginal notations are not used in this revision to identify changes with respect to the previous issue due to the extent of the changes.

FACILITY OPERATIONS SUPERVISOR CERTIFICATION

I,_____(Authorized Management Representative)_____, hereby certify that _____(Name)_____, the facility operations supervisor in charge of transferring, launching, or docking operations (as appropriate), is professionally qualified, through training and experience, to conduct these operations in a safe and reliable manner. Attachment (1) is a résumé of the facility operations supervisor's training and experience, fulfilling the requirements of Appendix C of MIL-STD-1625D(SH), upon which I have based my certification.

_____ _____

(Signature of Authorized Representative) Date of Signature

_____ _____

(Typed Name of Authorized Representative) (Title of Authorized Representative)

FIGURE 1. Sample facility operations supervisor certificate.

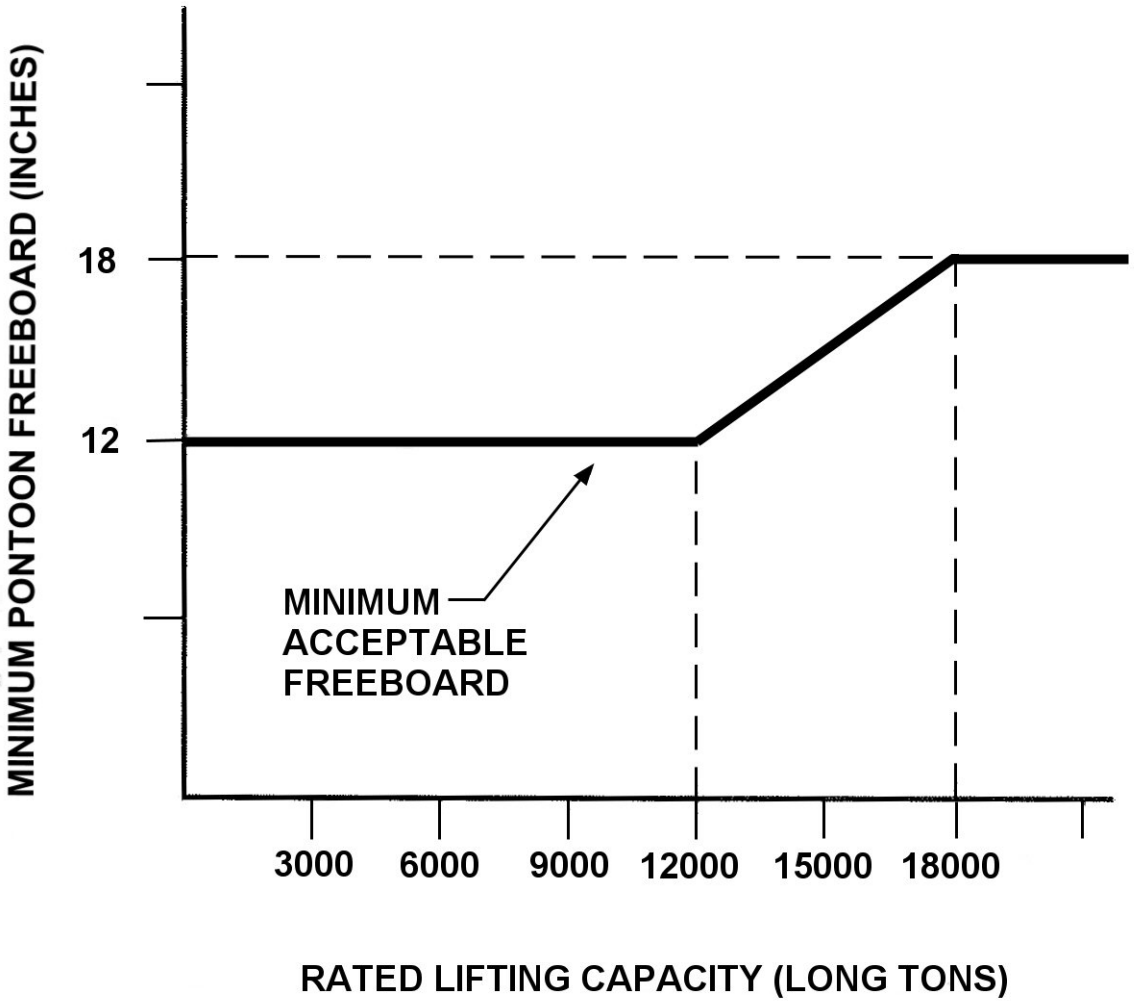

FIGURE 2. Minimum pontoon freeboard versus rated lifting capacity for floating dry docks and graving dock launch pontoons.

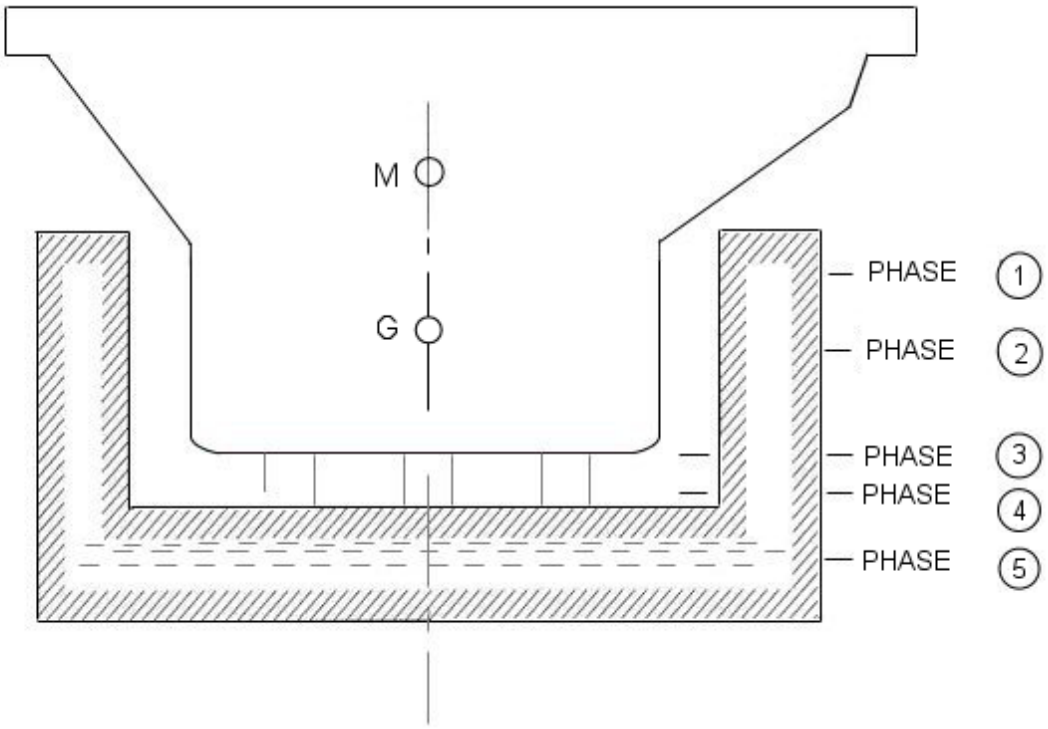

Phase 1 - Fully ballasted-down condition. The ship is floating independently and the dry dock is in the submerged condition before the ship bears on the blocks.

Phase 2 - Partial liftoff. The ship starts bearing on the blocks and one-half of the ship's weight is supported by the floating dock.

Phase 3 - Ship keel at water level. The ship's keel is about to leave the waterplane.

Phase 4 - Top of pontoon at water level. The water level between the wingwalls is just above the top of the pontoon.

Phase 5 - Normal-operating condition. Top of pontoon is at or above the minimum freeboard.

FIGURE 3. Phases in the docking evolution for stability calculations for floating dry docks.

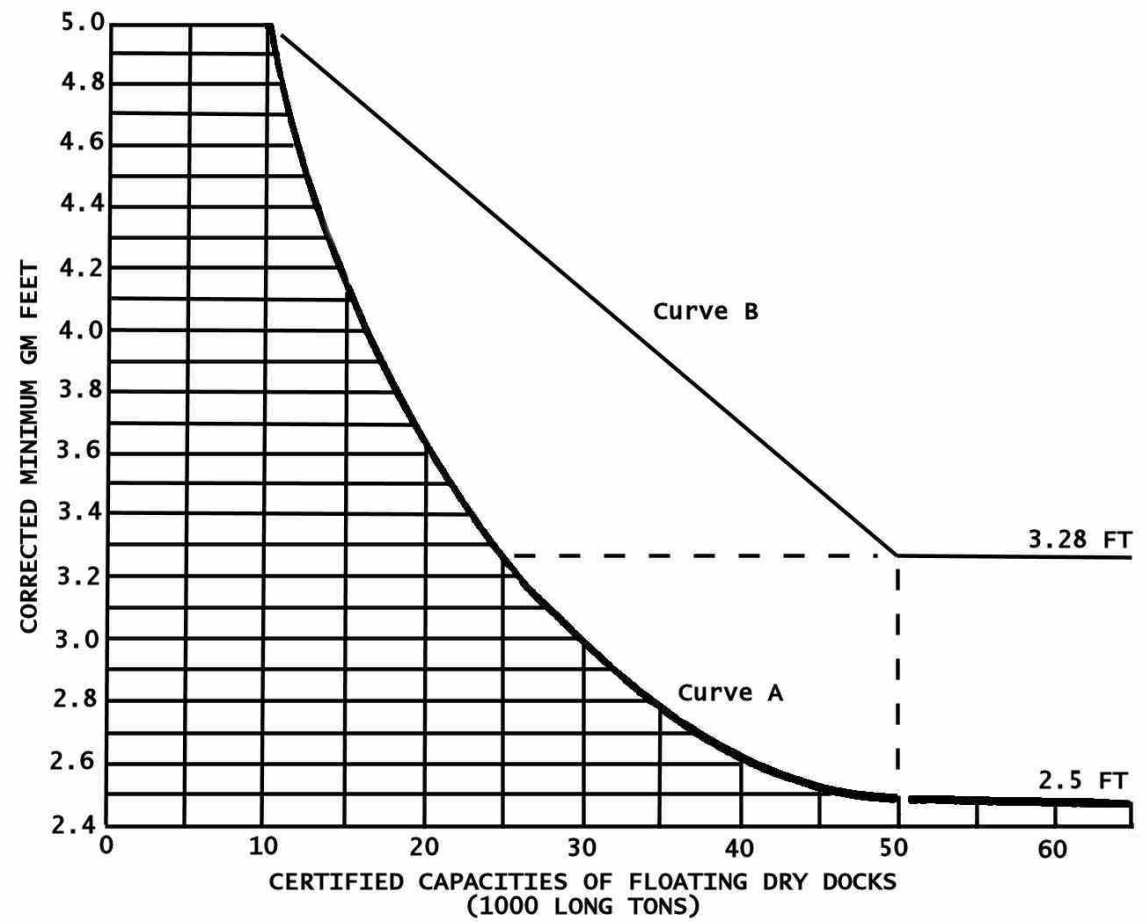

Curve A - Applies to all floating dry docks placed in operation on or before MIL-STD-1625C(SH) dated 25 August 1987.

Curve B - Applies to all floating dry docks placed in operation after MIL-STD-1625C(SH) dated 25 August 1987.

FIGURE 4. Minimum GM versus certified capacity of floating dry docks.

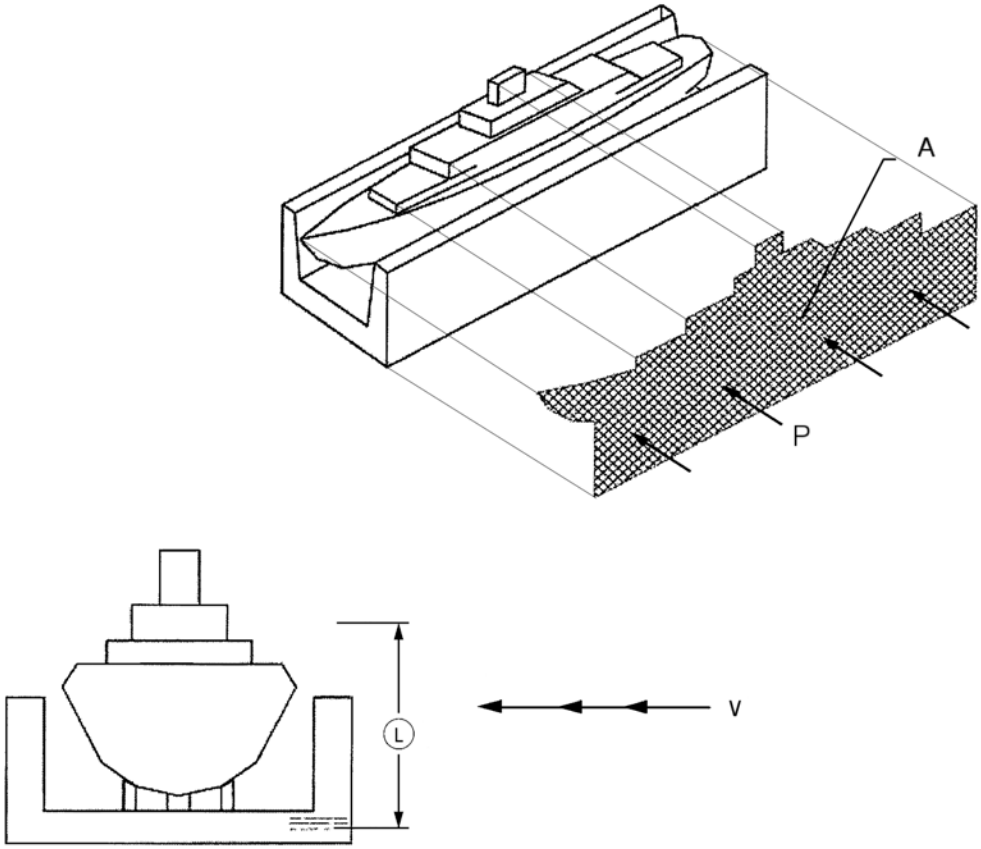

A - Projected sail area of ship and dock exposed to the wind, ft^2 (SHADED AREA)

L - Lever arm from half draft to centroid of sail area, feet.

p - Unit pressure due to wind, $lb/ft^2 = 0.004\ V^2$

V - Wind velocity, knots

Sail area moment = A * L * p (ft-lbs)

FIGURE 5. Sail area moment due to the ship and floating dry dock used for heeling arm due to wind calculation.

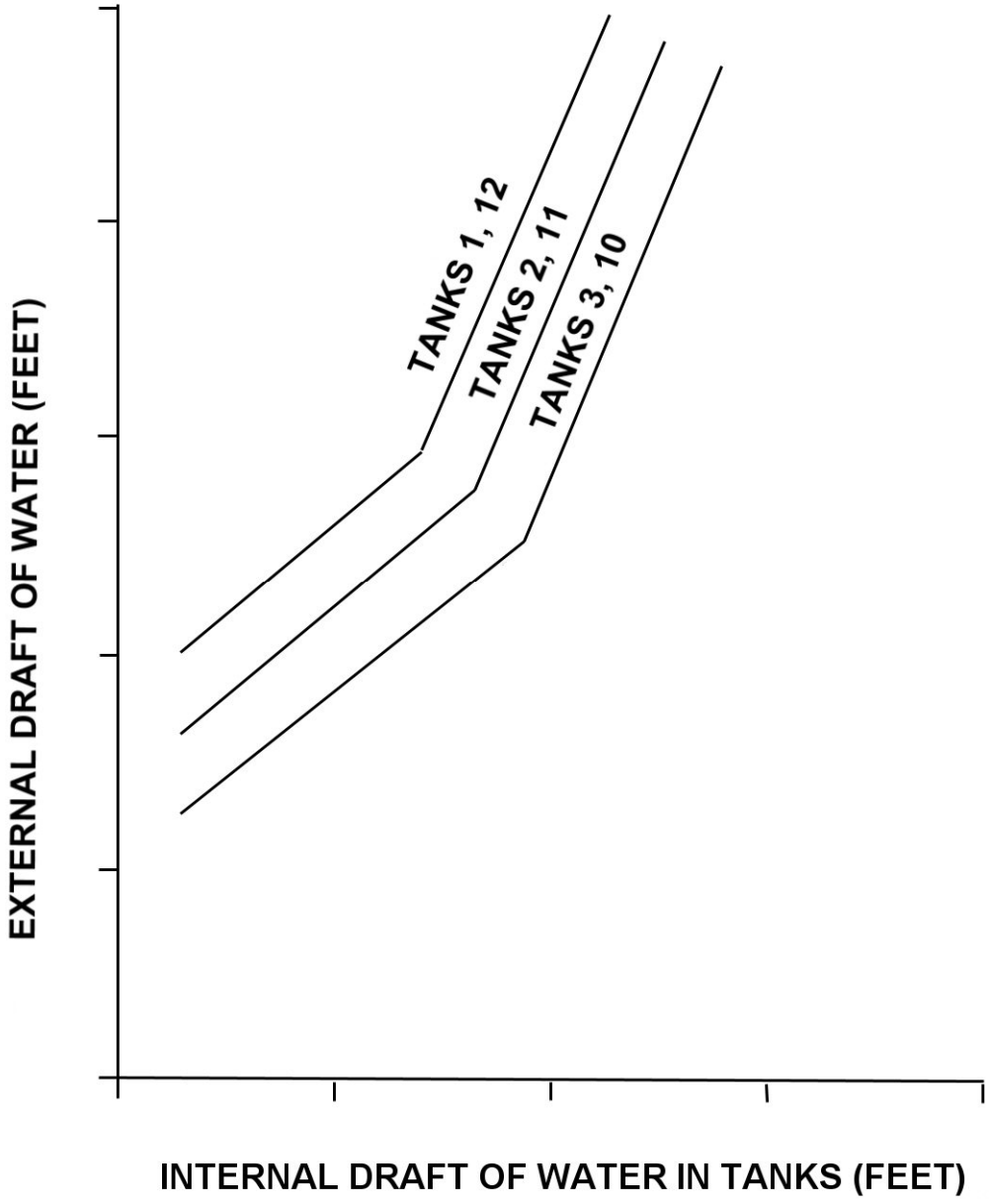

FIGURE 6. Ballast distribution for lifting floating dock without ship.

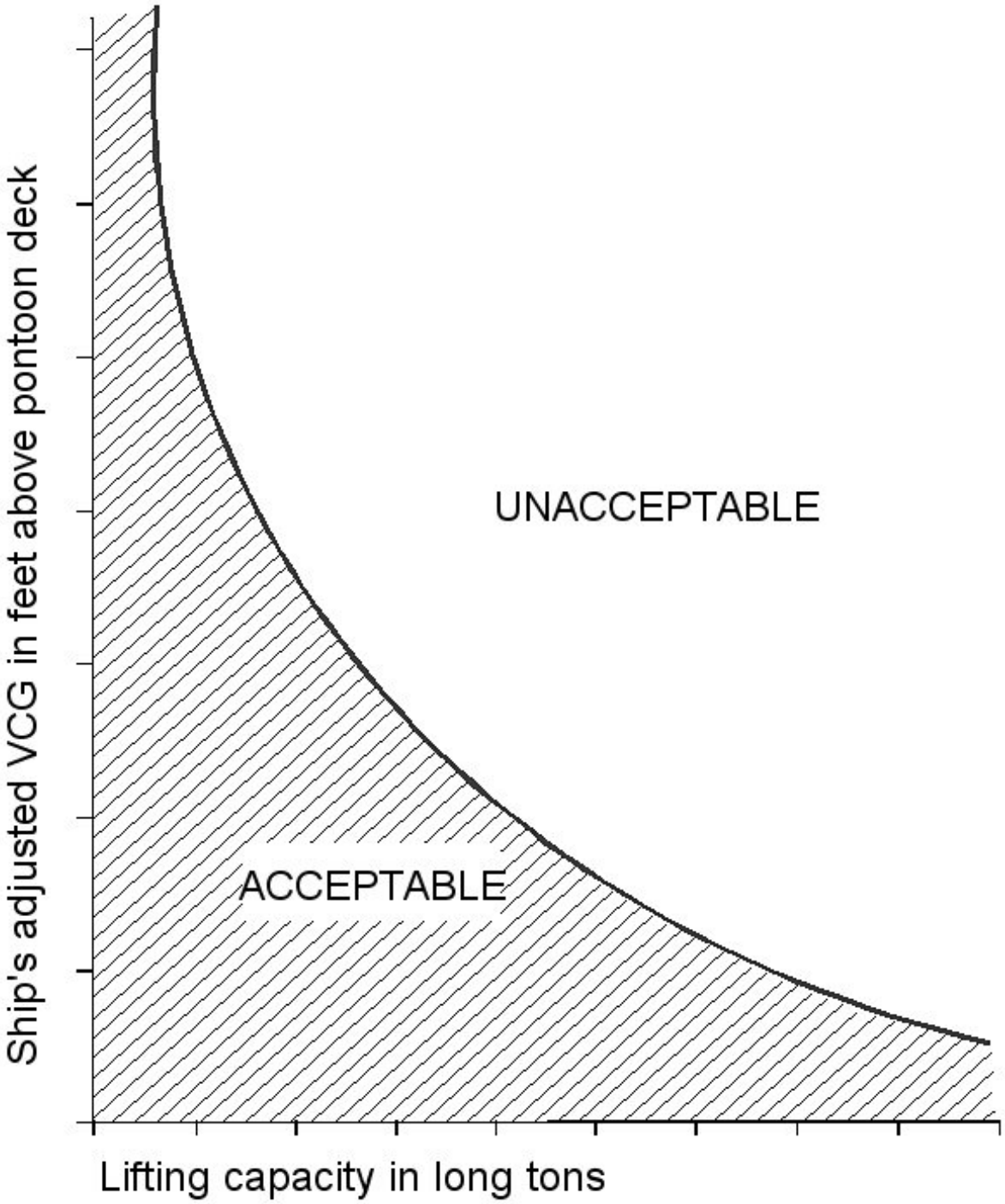

FIGURE 7. Limiting curve of ship's adjusted VCG versus lifting capacity for floating dry docks.

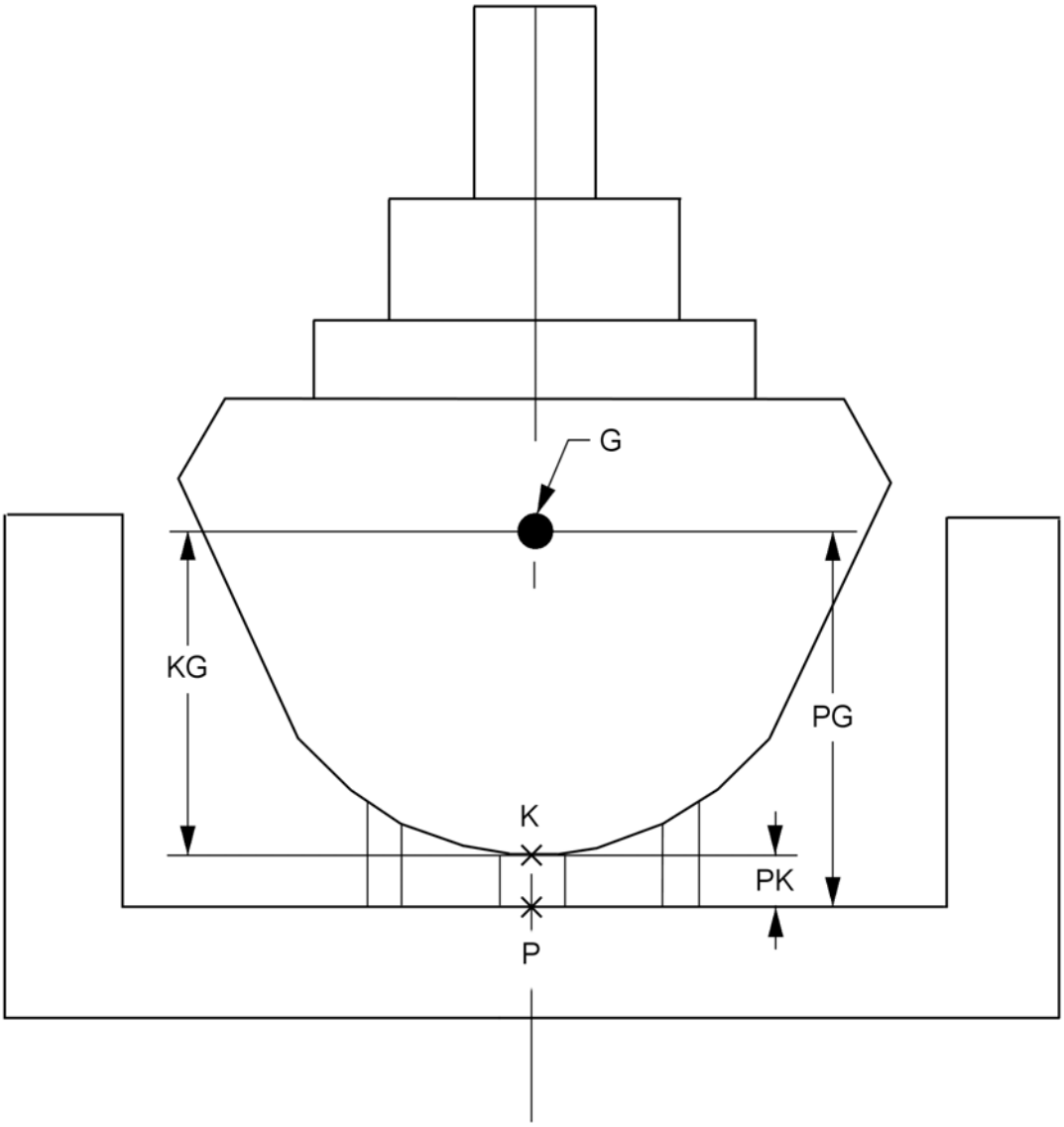

G	-	Vertical Center of Gravity
KG	-	Height of vertical center of gravity for ship's weight above the keel (K) of ship in feet.
PK	-	Height of keel blocks in feet above pontoon (P).
PG	-	Ship's adjusted VCG in feet above pontoon deck (PG = PK + KG).

FIGURE 8. Ship's adjusted VCG.

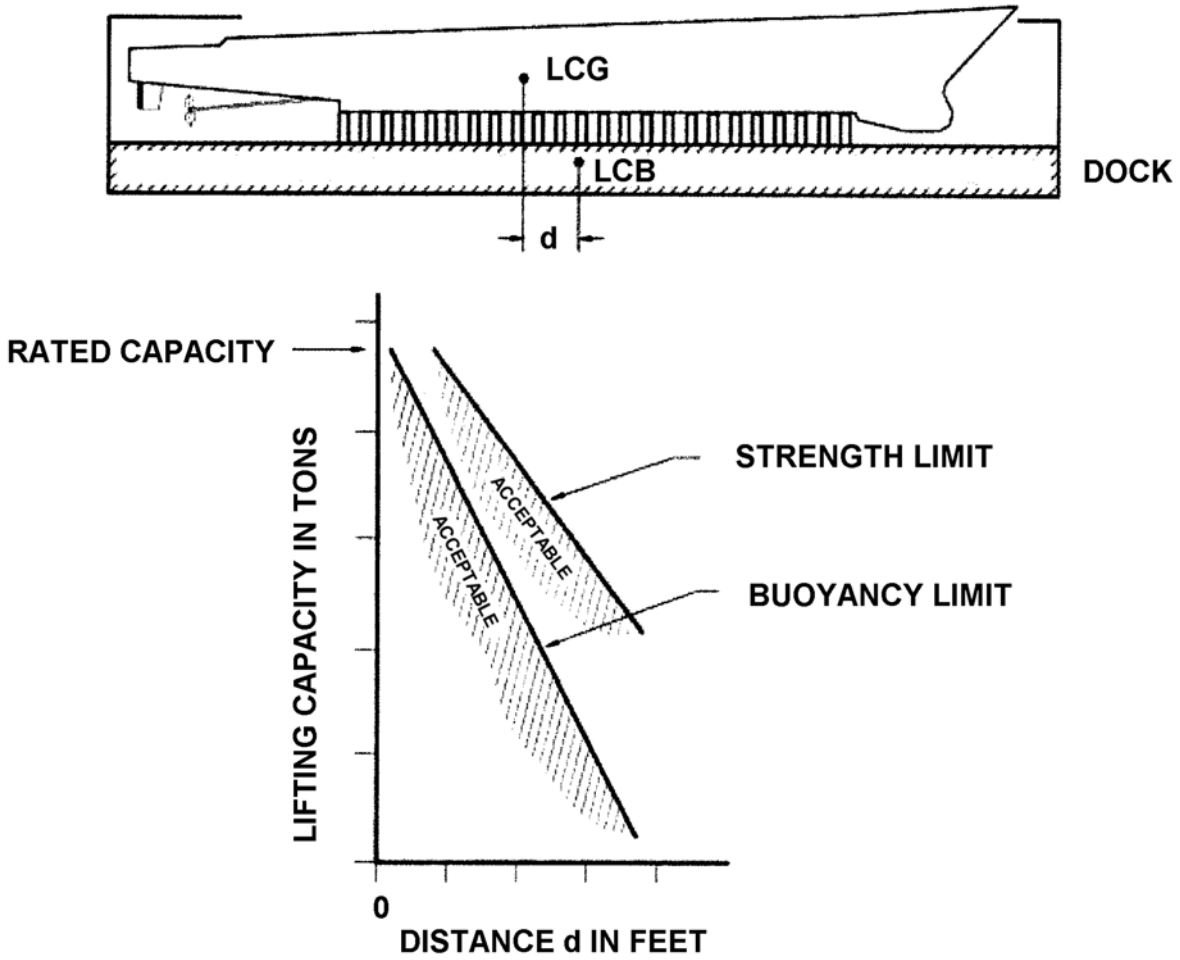

LCB - Dock longitudinal center of buoyancy

LCG - Ship longitudinal center of gravity

d - Longitudinal distance between dock's LCB and ship's LCG

FIGURE 9. Floating dry dock lifting capacity variation with ship location.

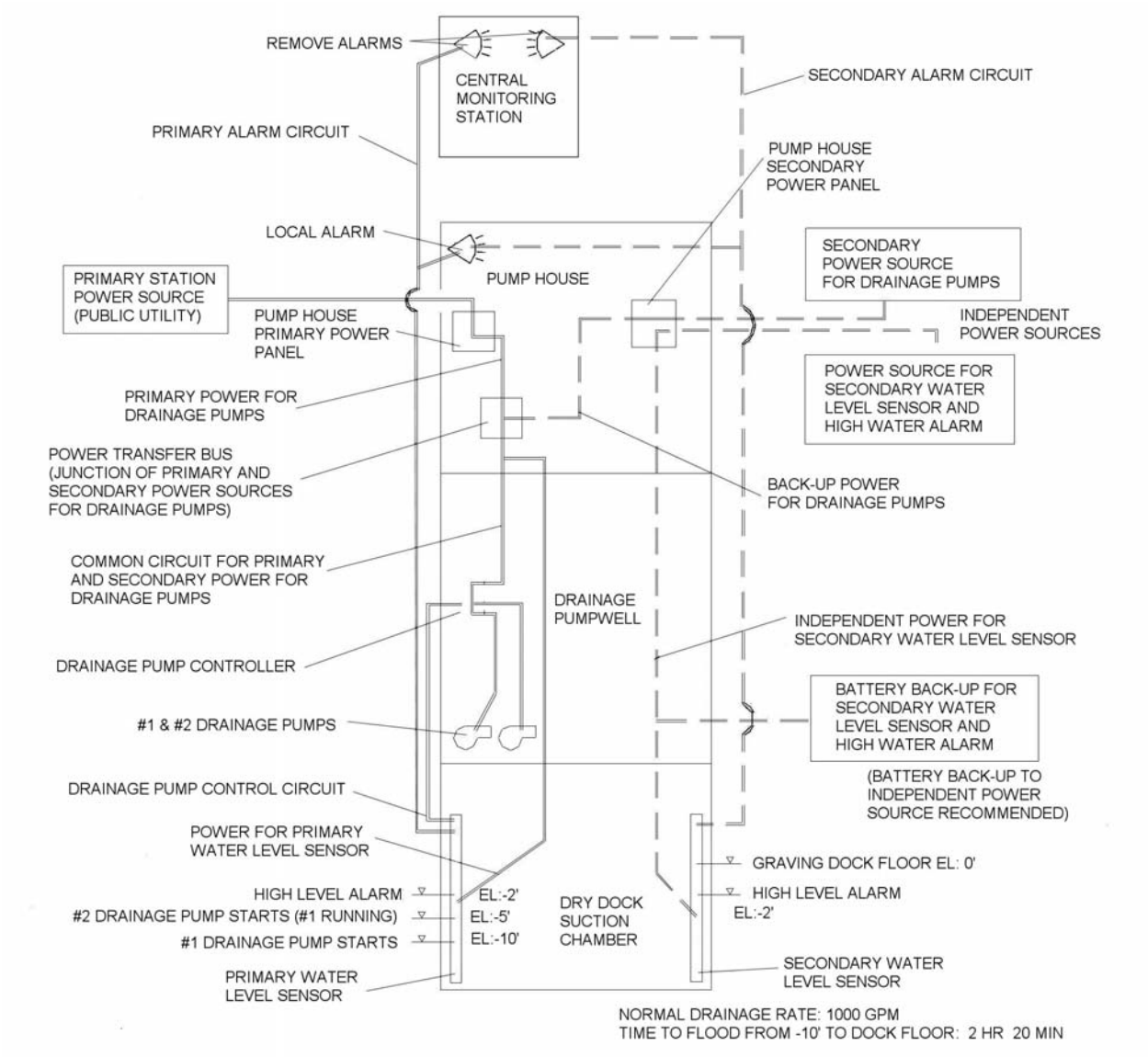

FIGURE 10. Example of two independent power sources for water level sensing systems and alarms for graving docks.

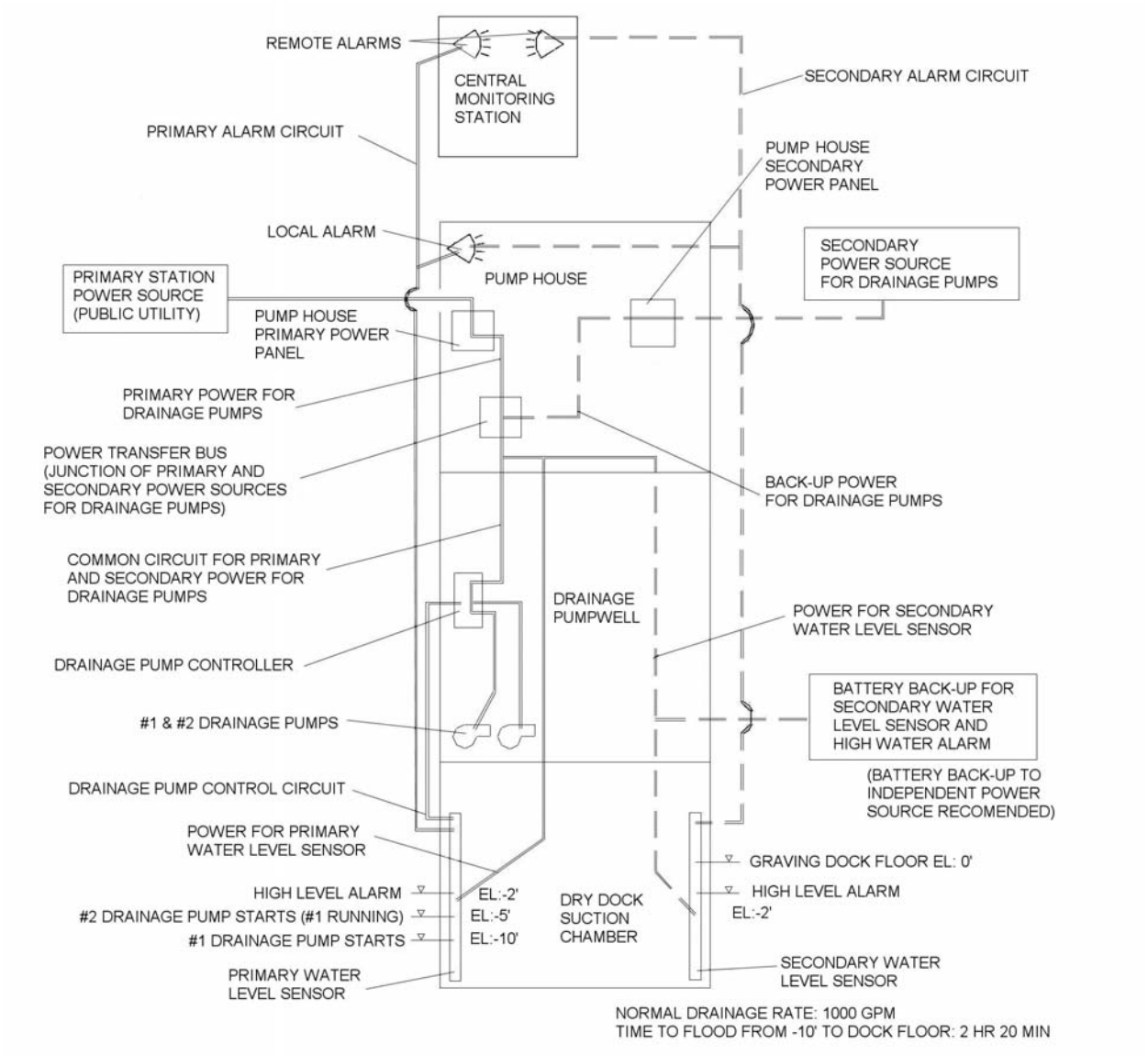

FIGURE 11. Example of single power source with battery backup for water level sensing systems and alarms for graving docks.

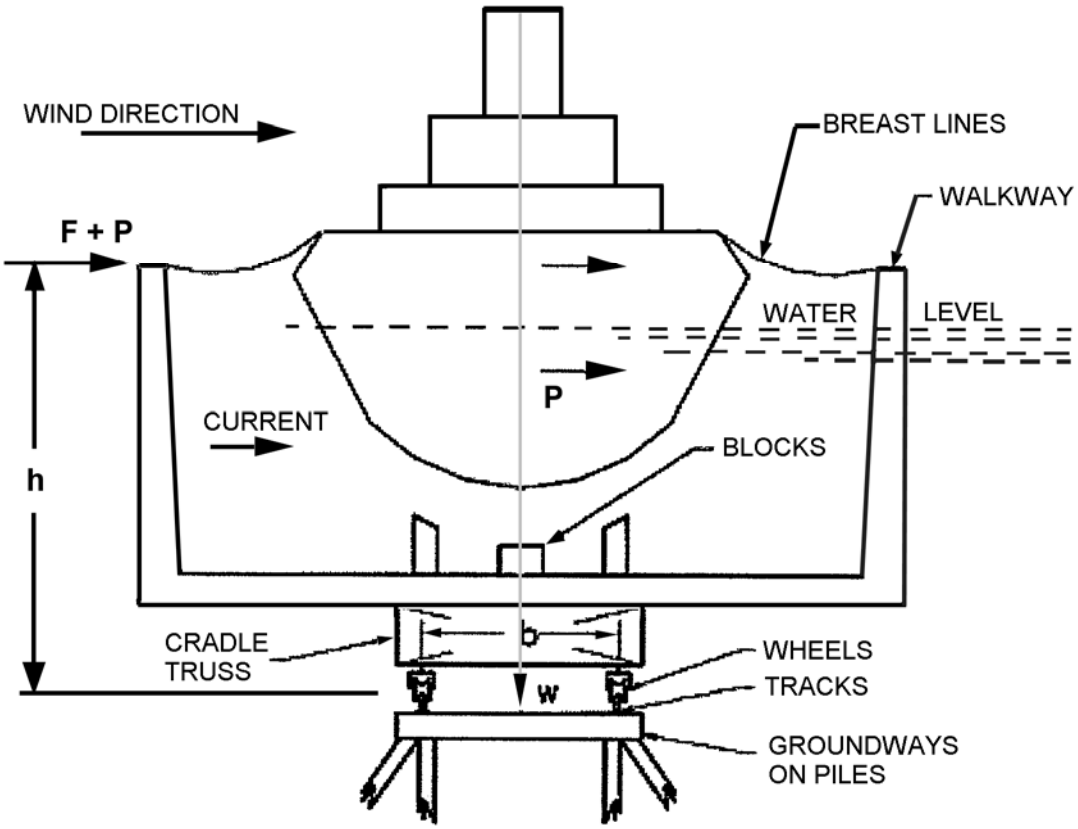

h	-	Height of breast lines above top of tracks
b	-	Width of track
M_o	-	Overturning moment
M_s	-	Stabilizing Moment
F	-	Wind load
P	-	Current load
W	-	Weight of cradle
F + P	-	Total load, assumed to be acting at the breast line

$M_o = h (F + P)$

$M_s = (W * b) / 2$

FIGURE 12. Forces on cradle during docking for marine railways.

FORMAT AND CONTENTS OF THE FACILITY CERTIFICATION REPORT (FCR)

A.1. SCOPE

A.1.1 Scope. This appendix describes the format and contents of the facility certification report (FCR). This appendix is a mandatory part of the standard. The information contained herein is intended for compliance.

A.2. DEFINITIONS

A.2.1 Definitions. The definitions in section 3 of this document apply to this appendix.

A.3. REQUIREMENTS

A.3.1 General. The paragraphs below describe the format for the general requirements explained in section 4. These requirements are amplified by facility type in 5.1 through 5.5.

A.3.2 Format. The FCR and enclosures shall be submitted in 8½- by 11-inch size, three ring binders. Drawings may be folded and packeted together at the end of the report, or reduced in size, if detail is not obliterated, and presented as foldouts in the binders.

A.3.2.1 Changes and additions. Changes and additions that are made in the FCR, after Navy review, shall be documented as a FCR change and shall be prepared as inserts in the three-ring binders.

A.3.2.2 Uniformity of style. Uniformity of style for enclosures shall not be required. Thus in the case of items such as operating procedures, if one has an existing document that contains the required information, the document may be included in the enclosure without its having to be retyped. This document shall be cross-referenced to the requirements of this document.

A.3.2.3 Typing. Text in the FCR and enclosures shall be typed in the English language. Typed or neatly handwritten calculations shall be provided in English units.

A.3.2.4 Sketches and drawings. Sketches and drawings shall be of professional quality; blueprints and reproductions shall be clear and legible.

A.3.2.5 Numbering. Sections, paragraphs, figures, tables, and enclosures shall be numbered. Pages shall be numbered either sequentially or separately for each section (for example, 2-1, 2-2, 2-3, for section 2). Pages inserted after each revision may be numbered as follows: 25a, 25b, 25c, etc., if inserted after page 25. All revised pages shall indicate the date of revision.

A.3.3 Contents. Contents shall be in accordance with A.3.3.1 and A.3.3.2.

A.3.3.1 General organization. The contents shall be organized in three parts, as shown on figure A-1. The contents of each part are described in the following paragraphs.

A.3.3.2 Front matter. Front matter shall be in accordance with A.3.3.2.a through A.3.3.2.f.

a. Cover sheet. The cover sheet shall be prepared as illustrated on figure A-2.

b. Cover letter. A cover letter, similar to those illustrated on figures A-1 and A-2 (as applicable), shall follow the cover sheet.

c. Proprietary data list (optional). If the report contains data considered proprietary by the operator, the sheet following the cover letter shall contain a notation similar to that shown on figure A-5 listing the sections or pages of the FCR that contain proprietary data.

d. Surveyor's endorsement. The next sheet in the FCR shall contain a surveyor's endorsement similar to that shown on figure A-6. If personnel from two or more firms carry out the surveys, officials of each firm shall sign the endorsement.

e. List of revised pages/enclosures. The surveyor's endorsement sheet shall be followed by a list of revised pages as shown on figure A-7.

f. Table of contents. The table of contents shall list sections and paragraphs, figures, tables, and enclosures.

A.3.4 General description. The FCR shall describe the facility and its intended use, and shall demonstrate that the facility is certifiable in its present condition, provided that the proposed repairs are carried out and the facility is operated in accordance with the stated operating procedures. A brief description of the facility and its site shall be provided; including plan view, elevations, and sections showing dimensions, docking block arrangements, and any other pertinent features. Note that detailed facility data items shall be provided in the enclosures.

A.3.5 Enclosures. Enclosures described below shall be provided.

A.3.5.1 Enclosure I: historical data. The historical data shall contain the following information:

a. Dates of initial design and construction.

b. Role of classification societies in design approval, or surveys, if any.

c. Nature, dates, and drawings of facility modifications that have affected the capacity of the facility.

d. Major storms and earthquakes and their effects as experienced by the facility, including maximum water levels, maximum wind experienced, and maximum seismic intensity.

e. Nature and dates of incidents that resulted in a change to the facility and that affected its capability for safe operation. Technical drawings that depict the repairs or modifications of the facility as a result of the incident shall be provided. Steps taken to prevent recurrence of these incidents shall be described.

f. Past use of the facility, dates, and displacement or docking weight and type of ships docked or built.

A.3.5.2 Enclosure II: design data. Design data shall substantiate that the facility has the capability to safely handle a ship with a displacement equal to the CRC as specified in 4.5. An executive summary of the analysis results shall be provided.

A.3.5.3 Enclosure III: operational limitations. Operational limitations that are necessary for safe operation of the facility shall be listed as specified in 4.7. Appropriate operational limitations shall be posted at the control station.

A.3.5.4 Enclosure IV: manning procedures and personnel qualification criteria. This enclosure shall contain information as specified in 4.6.

A.3.5.5 Enclosure V: maintenance program. A brief description of the maintenance program shall be provided as specified in 4.9.

A.3.5.6 Enclosure VI: operating procedures. The operating procedures shall be provided as specified in 4.7 and as amplified by the applicable detailed requirements sections. The procedures described in this enclosure shall be consistent with the operational limitations specified in enclosure III and with the manning described in enclosure IV.

A.3.5.7 Enclosure VII: protection of a ship during the lay period. This enclosure shall be provided as specified in 4.8.

A.3.5.8 Enclosure VIII: survey results. This enclosure shall be prepared on company letterhead, signed by the chief surveyor or the chief executive of the surveying firm(s) and shall contain the following information:

a. Executive summary of the survey results.

b. Experience and qualifications of organizations that conducted the surveys.

c. Experience and qualifications of surveyors and divers in areas of specialty as related to the task.

d. Dates and major milestones in surveys.

e. Scope of the survey effort; reasons for this choice.

f. Conclusions drawn from the survey results, supported by inclusion of the relevant survey data and evaluation of survey results. A summary evaluation of the material condition of the facility and a recommended CRC shall be included.

g. Recommendations on required repairs, facility modifications, changes in operational limitations, and changes in the operating procedures and supporting rationale.

h. List of items that were not surveyed or tested and recommended actions concerning these items.

i. Summary checklists with a description of marginal and unsatisfactory items.

Note that this enclosure is not a repository for raw survey data. The raw data shall be maintained by the facility operator.

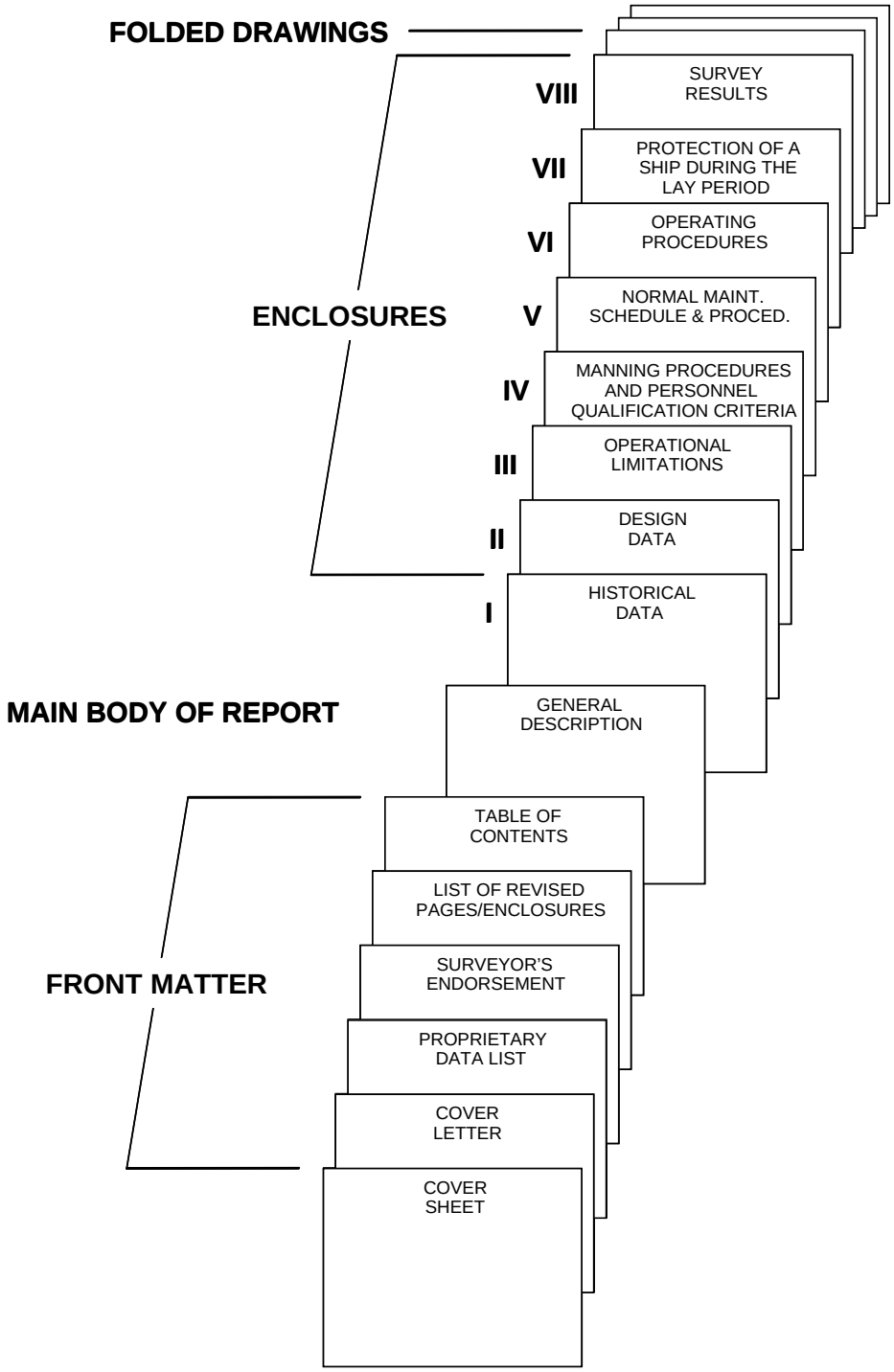

FIGURE A-1. Facility certification report contents.

FACILITY CERTIFICATION REPORT

For

DRY DOCK NO. 3

Operated by

XYZ Shipbuilding Corp.
12 Washington Blvd
Smalltown, AB 12345

Leased from
U.S. Navy
For period (if applicable)
1 January 2003 to 31 December 2007

Submitted
1 June 2003

FIGURE A-2. Sample cover sheet for FCRs.

From: Commander, Sometown Naval Shipyard

To: Commander, Naval Sea Systems Command (SEA 04XQ2)

Subj: FACILITY CERTIFICATION REPORT FOR DRY DOCK NO. 3

Ref: (a) MIL-STD-1625D (SH) Safety Certification Program for Drydocking Facilities and Shipbuilding Ways for U.S. Navy Ships

1. This Facility Certification Report is submitted in accordance with reference (a) for certification of Dry Dock No. 3 for a certification capacity of 10,000 long tons.

2. The historical data and design data for Dry Dock No. 3 are included as enclosures I and II. Enclosures III through VII describe Sometown Naval Shipyard's operational limitations, manning procedures and personnel qualification criteria, maintenance program, operating procedures, and methods for protecting a ship during the lay period. The material condition survey results are provided in enclosure VIII.

3. Reports of accidents or incidents, changes in design, manning or operating procedure revisions, and completion of repairs that are specifically required by the Navy will be submitted in accordance with reference (a).

//S// John Smith

FIGURE A-3. Sample cover letter for a Navy operated facility.

XYZ Shipbuilding Corp.
12 Washington Blvd.
Smalltown, AB 12345

Supervisor of Shipbuilding, Conversion and Repair, U.S. Navy

Smalltown, AB 12345

Subj: FACILITY CERTIFICATION REPORT FOR DRY DOCK NO. 3

Sir:

1. This Facility Certification Report is submitted in accordance with MIL-STD-1625D (SH) Safety Certification Program for Drydocking Facilities and Shipbuilding Ways for U.S. Navy Ships for certification of Dry Dock No. 3 for a certification capacity of 10,000 long tons.

2. The historical data and design data for Dry Dock No. 3 are included as enclosures I and II. Enclosures III through VII describe XYZ Shipbuilding Corp's operational limitations, manning procedures and personnel qualification criteria, maintenance program, operating procedures, and methods for protecting a ship during the lay period. The material condition survey results are provided in enclosure VIII.

3. Reports of accidents or incidents, changes in design, manning or operating procedure revisions, and completion of repairs that are specifically required by the Navy will be submitted in accordance with MIL-STD-1625D (SH).

//S// John Smith
President
XYZ Shipbuilding Corp.

FIGURE A-4. Sample cover letter for a commercially operated facility.

PROPRIETARY DATA LIST

Pages 25 – 26, II.5 – II.6 and VI.1 – VI.27 contain proprietary data.

FIGURE A-5. Sample proprietary data list.

ALPHA ENGINEERING, INC.
5 River Drive
Forestville, ST 54321

SURVEYOR'S ENDORSEMENT

1. Dry Dock No. 3, operated by XYZ Shipbuilding Corporation, was surveyed between January and March 2003. Results of the survey are provided in Enclosure VIII of this report.

2. We endorse XYZ Shipbuilding Corporation's request for certification of this facility for a rated capacity of 10,000 long tons and block loading of 50 long tons per foot.

3. We recommend certification of the facility.

//S// James Jones
President
Alpha Engineering, Inc.

FIGURE A-6. Sample of surveyor's endorsement.

List of Revised Pages/Enclosures			
Pages/enclosures	**Effective date of revision**	**Description of revision**	**Date entered**
3-16 through 3-22	01 Mar 1999	Added disaster plan for earthquake	10 Mar 1999
2-8	03 May 1999	Revised manning procedures to include line handler qualifications	01 Jun 1999
2-2, 2-4, 2-5, 3-1 through 3-20, Fig 2-1, Fig. 3-1, Fig. 3-2	01 Mar 2000	New data for facility certification	05 Mar 2000
Enclosure I	04 Apr 2000	Facility certification new Enclosure I, Historical Data	10 Apr 2000
Enclosure VIII	04 Apr 2000	New Enclosure VIII, Survey Results	10 Apr 2000
Provide purpose of revision.			

FIGURE A-7. Sample list of revised pages.

SUMMARY OF STEPS LEADING TO FACILITY CERTIFICATION

B.1. SCOPE

B.1.1 Scope. This appendix describes the facility certification process. This appendix is a mandatory part of the standard. The information contained herein is for compliance.

B.2. DEFINITIONS

B.2.1 Definitions. The definitions in section 3 of this document apply to this appendix.

B.3. REQUIREMENTS

B.3.1 General. Typical steps leading to certification of a facility are listed in the following paragraphs.

B.3.2 Preliminary FCR. When the operator desires to obtain Navy guidance on the necessary content of the design data package, the following steps shall be taken:

a. The facility operator assembles available facility data to satisfy Appendix A requirements.

b. A surveyor reviews facility data and conducts a preliminary survey.

c. The facility operator proposes the CRC and also specifies deviations considered necessary. The operator shall then forward the preliminary FCR package to the Navy.

d. The Navy will review the preliminary FCR, rule upon the deviation requests or requirement changes, and respond to the operator.

B.3.3 FCR preparation. When the operator desires to obtain certification, the following steps shall be taken:

a. The facility operator assembles the necessary facility data to satisfy Appendix A requirements.

b. A surveyor conducts the necessary surveys of the facility (e.g., site, soil, hydrographic, structural, mechanical, electrical, etc.).

c. A surveyor conducts tests, observes operation of the facility, and evaluates the survey results. A summary evaluation of the material, mechanical, and electrical condition of the facility shall be included in the survey report.

d. The operator reviews the survey results, defines operational limitations, and prepares operating procedures.

e. The operator assembles the certification package and forwards it to the Navy.

B.3.4 FCR review and certification. When the Navy receives a certification request, the following steps are taken:

a. The Navy reviews the request packages for completeness and requests the operator to provide any omitted or incomplete data.

b. The Navy evaluates the FCR with special regard to CRC, operational limitations, operating procedures, maintenance program, manning, and surveyor recommendations.

c. The Navy conducts a precertification inspection.

d. The Navy issues a facility certification to the operator, which defines CRC, the certification period, and the conditions for sustaining certification.

B.3.5 Operation of a certified facility. The operator shall:

a. Complete repairs and modifications as necessary to maintain certification.

b. Operate the facility in accordance with procedures described in the FCR.

c. Report to the Navy when any of the following occurs: accidents or incidents, operating outside certified limits, facility design changes, key personnel changes, operating procedure or manning revisions, and prescribed repair completions. Facility modifications and operating procedure changes require advance Navy approval and an update to the FCR upon their completion.

FACILITY OPERATIONS SUPERVISOR QUALIFICATIONS DOCUMENTATION

C.1. SCOPE

C.1.1 Scope. This appendix establishes the minimum qualifications for facility operations supervisors. This appendix is a mandatory part of the standard. The information contained herein is intended for compliance.

C.2. DEFINITIONS

C.2.1 Definitions. The definitions in section 3 of this document apply to this appendix.

C.3. REQUIREMENTS

C.3.1 General. As specified in 4.6.2.2, the operator shall provide a résumé of the training and experience of each individual designated as a facility operations supervisor. This appendix outlines the requirements for such a résumé.

C.3.2 Training. It shall be demonstrated that the FOS has received formal schooling in the mathematics of stability calculations within the previous 3 years or has utilized such mathematics within the previous year. As an alternative, evidence shall be provided that the FOS has the support of an individual or agent who meets either of the above criteria. In addition, it shall be demonstrated that either of the above can perform the calculations required by 5.1.5 of this document and NSTM Chapter 997. All facility operations supervisors shall show evidence of having passed the NAVSEA Dry Dock Safety and Certification Program Course Examination.

C.3.3 Work experience. It shall be demonstrated that the FOS meets one of the following criteria:

a. Served as a qualified dockmaster on the same type of facility for a period during which a total of at least 10 ship dockings were accomplished, one of which shall have been conducted within the previous six months. The "same type of facility" means that if the individual is the designated facility operations supervisor for a graving dock, they shall have the requisite experience in graving docks. Likewise for marine railways, vertical lifts, and floating dry docks. Additionally, in the case of floating dry docks, they shall be of similar size or design (e.g., single or multiple sections). Supervised or assisted in the docking of at least two ships with large deadrises (e.g., CG-47, FFG-7, YTB) and two using keel blocks at least eight feet high.

b. Serving under a dockmaster in an apprentice or assistant role, operated a facility for a period of time during which a total of at least 20 ship dockings were accomplished, 10 of which shall have been completed in the same type of facility (with comparable or greater size and similar methods of operation, i.e., single or multiple-section floating dry dock, graving dock, marine railway, vertical lift, etc.) in which the designee is seeking qualification. One docking shall have been conducted within the previous six months. Additionally, assisted in the docking of at least two ships with large deadrises and two using keel blocks at least eight feet high.

c. Served as a launch supervisor or assistant supervisor, for at least two previous successful launchings of ships, with comparable or greater tonnage, prior to supervising the launching of a Navy ship. One launching shall have been conducted within the previous 5 years.

d. Served as a transfer supervisor or assistant supervisor, for at least two previous successful transfers of ships, with comparable or greater tonnage, prior to supervising the transfer of a Navy ship. One transfer shall have been conducted within the previous 5 years.

C.3.4 Retaining qualifications. Retaining qualification shall require the following:

a. Floating dry dock, graving dock, marine railway, or vertical lift Facility Operations Supervisors shall participate in at least one docking every year on the type of facility for which they are qualified. This qualification requires the review of a docking drawing and checking corresponding block build-up requirements, as well as active involvement in the actual docking operation. An FOS who fails to maintain their qualification in accordance with the requirements of this document shall requalify prior to docking a Navy ship by assisting in the docking of a minimum of two ships in the type of facility for which they are being requalified.

b. Launch Facility Operations Supervisors shall participate in at least one launching every 5 years on the type of facility for which they are qualified. Launching supervisors who fail to maintain their qualifications in accordance with the requirements of this document shall requalify prior to launching a Navy ship by assisting in the launching of a ship.

c. Transfer Facility Operations Supervisors shall participate in at least one transfer every 5 years on the type of facility for which they are qualified. Transfer supervisors who fail to maintain their qualifications in accordance with the requirements of this document shall requalify prior to transferring a Navy ship by assisting in the transferring of a ship.

C.3.5 Operational experience. Designated Facility Operations Supervisors shall provide a list of ships that they have docked or assisted in docking, launched or assisted in launching, transferred or assisted in transferring, including dates, facility and ship displacement, and in the case of dockings, whether any included ships with large deadrises or the use of high keel blocking.

C.3.5.1 Evolution credit. For each evolution (docking and undocking, launching, or transfer), no more than one person may be credited for serving as the FOS, and no more than one person may be credited for serving as the assistant FOS. When the evolution extends over multiple shifts, an FOS and an assistant for each shift may be credited.

C.3.5.2 Docking log. Each activity shall maintain a log indicating the FOS, and assistant, if applicable, of record.

PUMPING PLAN FOR FLOATING DRY DOCKS

D.1. SCOPE

D.1.1 Scope. This appendix describes the elements of a pumping plan. This appendix is a mandatory part of the standard. The information contained herein is for compliance.

D.2. DEFINITIONS

D.2.1 Definitions. The definitions in section 3 and on figure 3 of this document apply to this appendix.

D.3. REQUIREMENTS

D.3.1 General. Preparation of a pumping plan is a prerequisite for each docking of a Navy ship in a floating dry dock and for every evolution of a Navy-owned floating dry dock, burdened or unburdened. The facility operations supervisor shall monitor allowable differential head between adjacent tanks, allowable differential head between tanks and exterior dock drafts, deflection, list, trim, and drafts of the dock to ensure that they are within the operational limitations and are appropriate for the phase of the operation. Observations always take precedence over calculations. If there is an excessive deviation from the plan, the operation should be stopped and the situation evaluated to determine the reason for the discrepancy. A properly prepared pumping plan should consistently result in actual tank levels that approximate calculated tank levels. The difference between the actual and calculated tank levels should be within 20 percent. Procedures for preparation of a pumping plan shall be included in the FCR. These procedures shall include, but are not limited to, the items described in this appendix.

D.3.2 Objectives. The pumping plan shall be prepared to satisfy the following objectives:

a. Ensure that the dock has the lifting capacity to lift the ship in the desired longitudinal position with respect to the dock, taking into account the residual silt and water in the tanks.

b. Ensure that the dock, the ship, and the ship-dock combination will remain stable during operations.

c. Ensure that the structural integrity of the dock will be maintained during operations:

(1) The longitudinal bending moment and deflection remain within the acceptable range.

(2) The connections in multi-sectional docks are not overstressed.

(3) The bulkheads forming tank boundaries will not be overstressed because of excessive differential head between adjacent tanks.

(4) The shell plating will not be overstressed because of excessive differential head between tanks and exterior dock drafts.

(5) The dock blocking is not overloaded.

D.3.2.1 Plan content. In order to satisfy these objectives, the pumping plan shall define:

a. Water levels in the tanks at the critical stages.

b. Water levels in the tanks when the ship's status is checked.

D.3.2.2 Critical stages. When developing a pumping plan, determine the tank levels for the five phases of operations shown on figure 3 and for any planned stops. The critical stages for docking a Navy ship in a floating dry dock are as follows:

Phase 1 - The dock is fully ballasted down.

Phase 2 - The ship starts bearing on the blocks and one-half of the ship's weight is supported by the floating dock.

Phase 3 - The water level is at the top of the keel blocks.

Phase 4 - The water level is at the top of the pontoon deck. Ensure that the dock has minimum list prior to reaching phase 4.

Phase 5 - The dock's normal operating draft.

D.3.3 Planning. The following steps precede the preparation of a pumping plan:

a. Examination of the ship data, including the docking drawing, the curves of form, and the light ship weight distribution.

b. Ship survey, including information on variable weights, ship's drafts, and abnormalities such as heavy list, trim, or hull damage.

c. Calculation of the ship's displacement and LCG at the time of the docking or undocking, using the current ship's draft readings using the Displacement and Other Curves of Form drawing for the ship. Calculations of the required changes in the variable weights in the ship to correct list, trim, and excessive free-surface effects. Calculations shall include stability calculations as described in 5.1.5 and line loads as described in D.3.4.

d. Dock surveys to determine the effects of accumulated silt in the tanks on the available lifting capacity.

e. Examination of the required blocking that determines the longitudinal location of the ship with respect to the dock and its center of gravity above the pontoon deck.

D.3.4 Determining ship line loads. The ship line load, in long tons per foot, shall be determined and compared to the certified line load limit of the facility to ensure that the CRC is not violated. If strength and stability requirements are not violated, the line load can be calculated by the following methods:

a. If keel bearing is uniform and continuous, the distribution of ship's weight may be calculated by the simple trapezoidal method. Figure D-1 depicts a ship load distribution on a dry dock along with some general definitions and equations. For this very general case, the blocking is assumed to be continuous and uniform, and the load distribution may be assumed to be trapezoidal (i.e., $A<L_K/6$) and may be approximated as follows:

$$Load_{max} = W/L_K + 6WA/L_K^2$$

$$Load_{min} = W/L_K - 6WA/L_K^2$$

$$Slope = (Load_{max} - Load_{min})/L_K$$

b. For situations where the keel bearing is not uniform or continuous (varying block width, interrupted keel, flat bottom) ships line loads may be calculated by more detailed trapezoidal method described in NSTM Chapter 997.

c. If keel weight is non-uniform, such as a ship with long overhangs or highly concentrated weight, a more rigorous analysis is required. Some examples include CG, DD, and DDG ship classes.

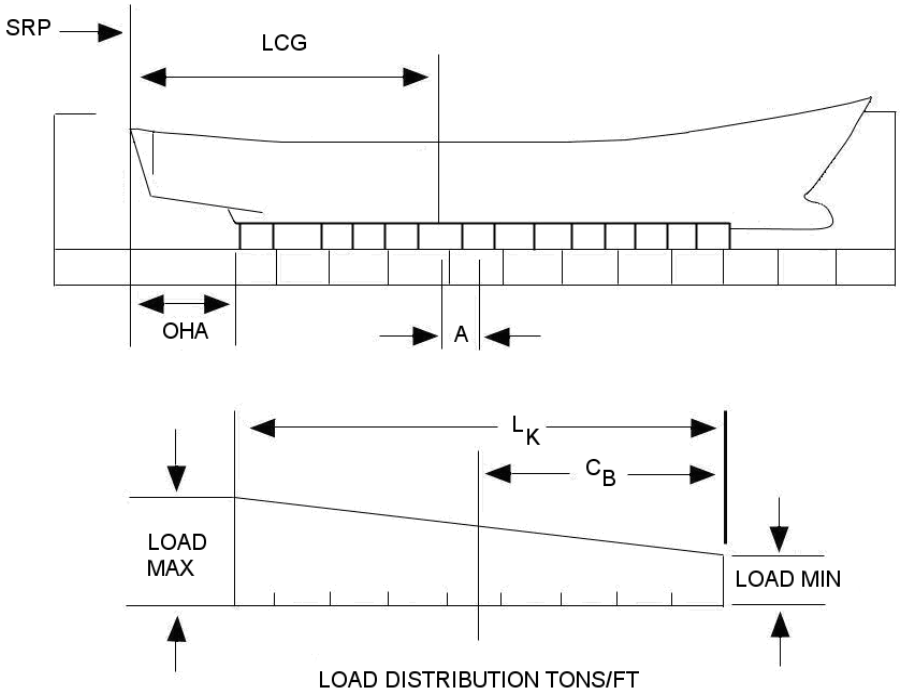

SRP	-	Stern reference point - the point from which distance to keel blocks is measured
LCG	-	Distance from SRP to ship's longitudinal center of gravity
OHA	-	Length of overhang from SRP to first after keel block
W	-	Displacement of ship
L_K	-	Length of keel blocking
C_B	-	Distance from the end of keel blocking to the center of blocking ($C_B = L_K/2$)
A	-	Distance from ship's LCG to the center of blocking ($A = C_B + OHA - LCG$)

FIGURE D-1. Distribution of ship weight by trapezoidal loading conditions.

INSPECTION CHECKLIST FOR FLOATING DRY DOCKS

E.1. SCOPE

E.1.1 Scope. This appendix provides a sample inspection checklist for floating dry docks. This appendix is a mandatory part of the standard. The information contained herein is intended for compliance.

E.2. DEFINITIONS

E.2.1 Definitions. The definitions in section 3 of this document apply to this appendix.

E.3. REQUIREMENTS

E.3.1 General requirements. Checklists shall be developed from the provided samples and expanded or modified to address all structures and systems applicable to the facility.

E.3.2 Mechanical/electrical system requirements. Systems shall be visually inspected and operationally tested in order for the inspection to be considered complete.

NOTE: In the checklists where a "*" appears, this indicates that items shall be listed individually. In the case where UTs on individual beams are required, the individual beams shall be identified. This identification is not required for individual beams during visual inspections.

NOTE: The following is a sample checklist that is to be used for guidance only and should be expanded or modified to address all structures and systems applicable to the facility.

Sheet No._____of_____

Date_____

FACILITY ID. _____

ITEMS INSPECTED	CONDITION			REMARKS
	S	U	M	
1. STRUCTURE				
1.1 Exterior structure				
Pontoon deck plating (top side)				
Pontoon deck hauling block support runners				
Pontoon end plating fwd (above WL)				
Pontoon end plating aft (above WL)				
Pontoon outrigger decking fwd & aft				
Outrigger framing/trusses				
Outrigger attachment to dock				
Wingwall top deck plating port (top side)				
Wingwall top deck plating stbd (top side)				
Wingwall inboard plating port				
Wingwall inboard plating stbd				
Wingwall outboard plating port				
Wingwall outboard plating stbd				
Connection between dock sections *				
Wingwall crane rails/supports port & stbd				
Crane securing devices				
Crane rail stops				
Flying bridge structure fwd & aft				
Flying bridge attachment to wingwall				
Mooring attachments at dry dock *				
Attachments at pier *				
Spud rails/chains *				
Spud shoes & pins *				
Anchor chains *				

S-Satisfactory U-Unsatisfactory M-Marginal
All marginal and unsatisfactory items shall be described in the remarks.

* Indicates items that must be listed individually

_____
Signature of Inspector

_____
Firm

Sheet No._____of_____
Date_____

FACILITY ID. _____

ITEMS INSPECTED	CONDITION			REMARKS
	S	U	M	
Fittings, cleats, bollards port & stbd				
Ship handling gear, guide rails port & stbd				
Entrance and wing wall fenders port & stbd				
Preservative coatings - exterior structure				
1.2 Interior structure – Safety decks				
Wingwall top deck plating & stiffeners port				
Top deck reinforcement at attachments				
Wingwall top deck plating & stiffeners stbd				
Top deck reinforcement at attachments				
Safety deck side plating & stiffeners port				
Side reinforcement at attachments				
Condition of WT penetrations				
Safety deck side plating & stiffeners stbd				
Side reinforcement at attachments				
Condition of WT penetrations				
Safety deck transverse frames port				
Safety deck transverse frames stbd				
Safety deck WT bulkheads port *				
Plating & framing				
Condition of WT doors & penetrations				
Safety deck WT bulkheads stbd *				
Plating & framing				
Condition of WT doors & penetrations				
Safety deck plating port (top side)				
Condition of WT penetrations				
Safety deck plating stbd (top side)				
Condition of WT penetrations				
Misc structure (list by operating station/comp)				
Ballast pump foundations				

S-Satisfactory U-Unsatisfactory M-Marginal
All marginal and unsatisfactory items shall be described in the remarks.
* Indicates items that must be listed individually

_____
Signature of Inspector

_____
Firm

Sheet No._____of_____
Date_____

FACILITY ID. _____

ITEMS INSPECTED	CONDITION			REMARKS
	S	U	M	
Valve operator foundations				
Diesel generator foundations				
Electrical panel foundations				
Fire pump foundations				
Pipe hangers & supports				
Wire way hangers & supports				
Machinery foundations *				
1.3 Interior structure – Wing walls				
TANK NO. 1WW (list each tank, port & stbd)*				Staged to inspect?
Safety deck plating & stiffeners				
Safety deck reinforcement at machinery fdns				
Outbd side plating & stiffeners				
Outbd side reinforcement at moorings				
Inbd side plating & stiffeners				
Bottom hull plating & stiffeners				
Transverse frames, trusses, swash bulkheads				
WT Longitudinal bulkhead plating & stiffeners				
WT transverse bulkhead plating & stiffeners *				
Seachests, discharges, vents, & WT penetrations				
Pump shaft and valve reach rod supports				
Pump and valve foundations				
Ballast piping hangers & supports				
Access hatches & gaskets				
Preservative coating/cathodic protection				
TANK NO. 2WW				Staged to inspect?
Safety deck plating & stiffeners				
Safety deck reinforcement at machinery fdns				
Outbd side plating & stiffeners				

S-Satisfactory U-Unsatisfactory M-Marginal
All marginal and unsatisfactory items shall be described in the remarks.

* Indicates items that must be listed individually

_____
Signature of Inspector

_____
Firm

Sheet No._____of_____
Date_____

FACILITY ID. _____

ITEMS INSPECTED	CONDITION			REMARKS
	S	U	M	
Outbd side reinforcement at moorings				
Inbd side plating & stiffeners				
Bottom hull plating & stiffeners				
Transverse frames, trusses, swash bulkheads				
WT Longitudinal bulkhead plating & stiffeners				
WT transverse bulkhead plating & stiffeners *				
Seachests, discharges, vents, & WT penetrations				
Pump shaft and valve reach rod supports				
Pump and valve foundations				
Ballast piping hangers & supports				
Access hatches & gaskets				
Preservative coating/cathodic protection				
1.4 Interior structure – Pontoon				
TANK NO. 1 (list each tank/void, port, stbd, CL)*				
Pontoon deck plating & stiffeners				
Bottom hull plating & stiffeners				
Transverse frames, trusses, swash bulkheads				
WT Longitudinal bulkhead plating & stiffeners*				
Vertical keel bulkhead/keel block supports				
WT transverse bulkhead plating & stiffeners *				
WT penetrations & vents				
Ballast piping hangers & supports				
Access hatches & gaskets				
Preservative coating/cathodic protection				
TANK NO. 2				
Pontoon deck plating & stiffeners				
Bottom hull plating & stiffeners				

S-Satisfactory U-Unsatisfactory M-Marginal
All marginal and unsatisfactory items shall be described in the remarks.
* Indicates items that must be listed individually

_____
Signature of Inspector

_____
Firm

Sheet No._____of_____
Date_____

FACILITY ID. _____

ITEMS INSPECTED	CONDITION			REMARKS
	S	U	M	
Transverse frames, trusses, swash bulkheads				
WT Longitudinal bulkhead plating & stiffeners*				
Vertical keel bulkhead/keel block supports				
WT transverse bulkhead plating & stiffeners *				
WT penetrations & vents				
Ballast piping hangers & supports				
Access hatches & gaskets				
Preservative coating/cathodic protection				
2. BALLAST SYSTEM				
2.1 Control station				
Console controls				
Valve position indicators				
Tank level indicators				
Draft level indicators				
Wing wall draft boards – corners & mid-dock				
Inclinometers				
Deflection indicators				
Pump ammeters				
2.2 Safety deck equipment (port & stbd)				
Ballast pump motors and controllers *				
Flooding valve operators *				
Dewatering valve operators *				
Cross-connecting valve operators *				
Local valve position indicators *				
2.3 Ballast tank equipment				
TANK NO. 1WW (list each tank)*				
Ballast pump casing & piping flanges				
Shafts & bearings				
Lubricating lines/tubing				

S-Satisfactory U-Unsatisfactory M-Marginal
All marginal and unsatisfactory items shall be described in the remarks.

* Indicates items that must be listed individually

_____
Signature of Inspector

_____
Firm

Sheet No. _____ of _____
Date_____

FACILITY ID. _____

ITEMS INSPECTED	CONDITION			REMARKS
	S	U	M	
Flooding valves & reach rods				
Dewatering valves & reach rods				
Cross-connecting valves & reach rods				
Ballast piping				
Vent piping				
Tank level indicator piping/floats/sensors				
TANK NO. 2WW				
Ballast pump casing & piping flanges				
Shafts & bearings				
Lubricating lines/tubing				
Flooding valves & reach rods				
Dewatering valves & reach rods				
Cross-connecting valves & reach rods				
Ballast piping				
Vent piping				
Tank level indicator piping/floats/sensors				
3. FIRE PROTECTION SYSTEM				
Fire pumps, motors, and controllers *				
Fire main piping and isolation valves				
Fire station hoses, nozzles, valves, fittings				
CO_2/dry chemical extinguishers				
Fire main pressure gauge				
Flow and pressure				
4. MISCELLANEOUS MECHANICAL SYSTEMS				
Capstans *				
Control air compressors and piping				
Mooring translation system winches *				
Mooring translation system chains/wire ropes				

S-Satisfactory U-Unsatisfactory M-Marginal
All marginal and unsatisfactory items shall be described in the remarks.
* Indicates items that must be listed individually

_____
Signature of Inspector

_____
Firm

Sheet No. _____ of _____
Date_____

FACILITY ID. _____

ITEMS INSPECTED	CONDITION			REMARKS
	S	U	M	
Ship handling system winches *				
Ship handling system wire ropes, sheaves, & guides				
Diesel generator engines and starting systems *				
5. ELECTRICAL POWER SYSTEMS				
Shore power system				
Diesel generator power system				
Shore power cables and supports				
Electrical panels and distribution system				
Electrical switch gear from primary to secondary				
Backup power system				
Security lighting				
6. COMMUNICATION SYSTEMS				
Primary				
Secondary				
Alarms (list type and function)*				

S-Satisfactory U-Unsatisfactory M-Marginal
All marginal and unsatisfactory items shall be described in the remarks.
* Indicates items that must be listed individually

_____
Signature of Inspector

_____
Firm

INSPECTION CHECKLIST FOR GRAVING DOCKS

F.1. SCOPE

F.1.1 Scope. This appendix provides a sample inspection checklist for graving docks. This appendix is a mandatory part of the standard. The information contained herein is intended for compliance.

F.2. DEFINITIONS

F.2.1 Definitions. The definitions in section 3 of this document apply to this appendix.

F.3. REQUIREMENTS

F.3.1 General requirements. Checklists shall be developed from the provided samples and expanded or modified to address all structures and systems applicable to the facility.

F.3.2 Mechanical/electrical system requirements. Systems shall be visually inspected and operationally tested in order for the inspection to be considered complete.

NOTE: In the checklists where a "*" appears, this indicates that items shall be listed individually. In the case where UTs on individual beams are required, the individual beams shall be identified. This identification is not required for individual beams during visual inspections.

NOTE: The following is a sample checklist that is to be used for guidance only and should be expanded or modified to address all structures and systems applicable to the facility.

Sheet No. _____ of _____

Date_____

FACILITY ID. _____

ITEMS INSPECTED	CONDITION			REMARKS
	S	U	M	
1. GRAVING DRY DOCK				
1.1 Dock Basic Structure				
Walls				
Floor				
Coping				
Altar				
Galleries				
Service tunnel				
Apron				
Outer caisson seat				
Inner caisson seat				
Middle caisson seat				
Drainage culverts				
Cross-dock drainage tunnels				
Flooding inlets				
Flooding/drainage tunnel				
Discharge tunnel				
General appearance				
Starboard flooding pit				
Port flooding pit				
1.2 Dock Fittings				
Roller chocks				
Portable guard rails				
Cleats				
Bollards				
Draft gages				
Stairs & handrails				
Gratings				

S-Satisfactory U-Unsatisfactory M-Marginal

All marginal and unsatisfactory items shall be described in the remarks.

* Indicates items that must be listed individually

_____
Signature of Inspector

_____
Firm

Sheet No. _____ of _____
Date_____

FACILITY ID. _____

ITEMS INSPECTED	CONDITION			REMARKS
	S	U	M	
Crane tracks				
1.3 Dock Mechanical Equipment				
Capstan No. 1 * (list each capstan)				
Capstan				
Motor				
Controller				
Brakes				
Capstan No. 2				
Capstan				
Motor				
Controller				
Brakes				
Port Flooding Sluice Gate *				
Gate leaf				
Gate guides				
Operator				
Controller				
Shaft				
Seal strips				
Wedges and dogs				
Thrust nut				
Pressure plate				
Packing gland				
Lubrication system				
Preservation				
Starboard Flooding Sluice Gate				
Gate leaf				
Gate guides				
Operator				

S-Satisfactory U-Unsatisfactory M-Marginal
All marginal and unsatisfactory items shall be described in the remarks.
* Indicates items that must be listed individually

_____
Signature of Inspector

_____
Firm

Sheet No. _____ of _____
Date_____

FACILITY ID. _____

ITEMS INSPECTED	CONDITION			REMARKS
	S	U	M	
Controller				
Shaft				
Seal strips				
Wedges and dogs				
Thrust nut				
Pressure plate				
Packing gland				
Lubrication system				
Preservation				
Port Stoplog				
Body				
Guide slot				
Hoisting equipment				
Gasket & seat				
Preservation				
Starboard Stoplog				
Body				
Guide slot				
Hoisting equipment				
Gasket & seat				
Preservation				
Port trash screen				
Starboard trash screen				
1.4 Dock Services				
Potable water				
Salt water				
Compressed air				
Steam				
CHT				

S-Satisfactory U-Unsatisfactory M-Marginal
All marginal and unsatisfactory items shall be described in the remarks.

* Indicates items that must be listed individually

_____
Signature of Inspector

_____
Firm

Sheet No. _____ of _____
Date_____

FACILITY ID. _____

ITEMS INSPECTED	CONDITION			REMARKS
	S	U	M	
Electrical shore power				
1.5 Dock Fire Protection System				
Fire pumps, motors, and controllers *				
Fire main piping and isolation valves				
Fire station hoses, nozzles, valves, fittings				
CO_2/dry chemical extinguishers				
Fire main pressure gauge				
Flow and pressure				
2. CAISSON NO.1 (list spare caissons separately)				
2.1 Caisson Exterior Structure				
Top deck plating (top side)				
Top Deck Covering				
Shell plating (dry-side)				
Shell plating (river-side above WL)				
Rubber gasket seal				
Timber seal backing				
Exterior preservation & cathodic protection				
Portable guard rails				
Fittings, cleats & chocks				
Hatches				
Fenders				
Air ports & manholes				
2.2 Caisson Interior Structure–Machinery deck				
Top deck plating & stiffeners				
Top deck reinforcement at attachments				
Side shell plating & stiffeners				
Transverse frames and truss members				
Bulkheads, breast hooks at each end				
Misc structure				

S-Satisfactory U-Unsatisfactory M-Marginal
All marginal and unsatisfactory items shall be described in the remarks.
* Indicates items that must be listed individually

_____
Signature of Inspector

_____
Firm

Sheet No. _____ of _____
Date_____

FACILITY ID. _____

ITEMS INSPECTED	CONDITION			REMARKS
	S	U	M	
Ballast pump foundations				
Valve operator foundations				
Electrical panel foundations				
Pipe hangers & supports				
Wire way hangers & supports				
Machinery foundations				
Stairs, ladders, grating, handrails				
Interior preservation				
2.3 Caisson Interior Structure–Ballast tanks				
MAIN BALLAST TANK (list each tank)*				
Machinery deck plating & stiffeners				
Side shell plating & stiffeners				
Transverse frames, trusses, swash bulkheads				
WT bulkhead plating & stiffeners* (each end)				
WT penetrations & vents				
Ballast piping hangers & supports				
Access hatches & gaskets				
Ladders and grating				
Preservative coating/cathodic protection				
Fixed ballast				
TRIM TANK NO. 1				
Machinery deck plating & stiffeners				
Side shell plating & stiffeners				
Transverse frames, trusses, swash bulkheads				
WT bulkhead plating & stiffeners				
Breast hook plating and stiffeners				
WT penetrations & vents				
Ballast piping hangers & supports				

S-Satisfactory U-Unsatisfactory M-Marginal
All marginal and unsatisfactory items shall be described in the remarks.
* Indicates items that must be listed individually

_____
Signature of Inspector

_____
Firm

Sheet No. _____ of _____
Date_____

FACILITY ID. _____

ITEMS INSPECTED	CONDITION			REMARKS
	S	U	M	
Access hatches & gaskets				
Ladders and grating				
Preservative coating/cathodic protection				
TRIM TANK NO. 2				
Machinery deck plating & stiffeners				
Side shell plating & stiffeners				
Transverse frames, trusses, swash bulkheads				
WT bulkhead plating & stiffeners				
Breast hook plating and stiffeners				
WT penetrations & vents				
Ballast piping hangers & supports				
Access hatches & gaskets				
Ladders and grating				
Preservative coating/cathodic protection				
2.4 Caisson Mechanical Equipment				
Dewatering Pump No. 1 * (List each pump)				
Pump				
Motor				
Controller				
Shaft, couplings & bearings				
Impeller				
Lubrication				
Preservation				
Discharge Valve No. 1 * (List each valve)				
Operator				
Valve body and flanges				
Reach rod & couplings				
Guide bearings				

S-Satisfactory U-Unsatisfactory M-Marginal
All marginal and unsatisfactory items shall be described in the remarks.

* Indicates items that must be listed individually

_____
Signature of Inspector

_____
Firm

Sheet No. _____ of _____
Date_____

FACILITY ID. _____

ITEMS INSPECTED	CONDITION			REMARKS
	S	U	M	
Guide bearings				
Lubrication				
Preservation				
Check Valve No. 1				
Dewatering Pump No. 2				
Pump				
Motor				
Controller				
Shaft, couplings, & bearings				
Impeller				
Lubrication				
Preservation				
Discharge Valve No. 2				
Operator				
Valve body and flanges				
Reach rod & couplings				
Guide bearings				
Lubrication				
Preservation				
Check Valve No. 2				
Main Tank Flood Valve No. 1				
Operator				
Valve body and flanges				
Reach rod & couplings				
Guide bearings				
Lubrication				
Preservation				
Main Tank Flood Valve No. 2				
Operator				

S-Satisfactory U-Unsatisfactory M-Marginal
All marginal and unsatisfactory items shall be described in the remarks.
* Indicates items that must be listed individually

_____
Signature of Inspector

_____
Firm

Sheet No. _____ of _____
Date_____

FACILITY ID. _____

ITEMS INSPECTED	CONDITION			REMARKS
	S	U	M	
Valve body and flanges				
Reach rod & couplings				
Guide bearings				
Lubrication				
Preservation				
Trim Tank-1 Equalizer Valve				
Operator				
Valve body and flanges				
Reach rod & couplings				
Guide bearings				
Lubrication				
Preservation				
Trim Tank-1 Flood Valve				
Operator				
Valve body and flanges				
Reach rod & couplings				
Guide bearings				
Lubrication				
Preservation				
Trim Tank-2 Equalizer Valve				
Operator				
Valve body and flanges				
Reach rod & couplings				
Guide bearings				
Lubrication				
Preservation				
Trim Tank-2 Flood Valve				
Operator				
Valve body and flanges				

S-Satisfactory U-Unsatisfactory M-Marginal
All marginal and unsatisfactory items shall be described in the remarks.
* Indicates items that must be listed individually

_____
Signature of Inspector

_____
Firm

Sheet No. _____ of _____
Date_____

FACILITY ID. _____

ITEMS INSPECTED	CONDITION			REMARKS
	S	U	M	
Reach rod & couplings				
Guide bearings				
Lubrication				
Preservation				
Ballast piping				
Flange connections at pumps and valves				
Seachests and discharges				
Hangers and supports				
Vent piping				
2.5 Caisson Electrical Equipment				
Shore power cables				
Shore power connection box				
Electrical panels and distribution system				
Security lighting				
2.6 Misc Caisson systems/equipment				
Tank level indicators				
High/low ballast water alarms				
Ventilation system				
Fire extinguishers				
List & trim indicators				
Communications system				
Primary				
Secondary				
3. PUMP HOUSE NO. 1				
3.1 Pump House Basic Structures				
Pump house walls				
Pump house floors				
Ladders and grating				
Roof				

S-Satisfactory U-Unsatisfactory M-Marginal
All marginal and unsatisfactory items shall be described in the remarks.
* Indicates items that must be listed individually

_____
Signature of Inspector

_____
Firm

Sheet No. _____ of _____
Date_____

FACILITY ID. _____

ITEMS INSPECTED	CONDITION			REMARKS
	S	U	M	
Pump pit				
Suction chamber				
General preservation				
3.2 Pump House Mechanical Equipment				
Main Dewatering Pump No. 1 *				
Pump motor				
Motor controller				
Shaft, couplings, & bearings				
Impeller				
Wearing ring				
Suction bell				
Pump casing				
Packing gland				
Flanges & gaskets				
Lubrication system				
Preservation				
Main Dewatering Pump No. 2				
Pump motor				
Motor controller				
Shaft, couplings & bearings				
Impeller				
Wearing ring				
Suction bell				
Pump casing				
Packing gland				
Flanges & gaskets				
Lubrication system				
Preservation				
MDP-1 Discharge Valve 1 *				

S-Satisfactory U-Unsatisfactory M-Marginal
All marginal and unsatisfactory items shall be described in the remarks.
* Indicates items that must be listed individually

_____
Signature of Inspector

_____
Firm

Sheet No. _____ of _____

Date_____

FACILITY ID. _____

ITEMS INSPECTED	CONDITION			REMARKS
	S	U	M	
Valve				
Motor controller				
Operator				
Housing				
Disc and wedges				
Flanges & gaskets				
Packing Gland				
Piping				
Reach rod				
Preservation				
MDP-1 Discharge Check Valve 1 *				
Valve				
Housing				
Flanges & gaskets				
Non-slam mechanism				
MDP-2 Discharge Valve 2				
Valve				
Motor controller				
Operator				
Housing				
Disc and wedges				
Flanges & gaskets				
Packing Gland				
Piping				
Reach rod				
Preservation				
MDP-2 Discharge Check Valve 2				
Valve				

S-Satisfactory U-Unsatisfactory M-Marginal

All marginal and unsatisfactory items shall be described in the remarks.

* Indicates items that must be listed individually

_____
Signature of Inspector

_____
Firm

Sheet No. _____ of _____
Date_____

FACILITY ID. _____

ITEMS INSPECTED	CONDITION			REMARKS
	S	U	M	
Housing				
Flanges & gaskets				
Non-slam mechanism				
Discharge Flap Valves at River Quay Wall*				
Seal				
Hinge pin				
Drainage Pump No. 1 *				
Pump motor				
Motor controller				
Shaft & couplings				
Guide bearings				
Impeller				
Wearing ring				
Suction bell				
Pump casing				
Packing gland				
Flanges & gaskets				
Lubrication system				
Preservation				
Drainage Pump No. 2				
Pump motor				
Motor controller				
Shaft, couplings, & bearings				
Guide bearings				
Impeller				
Wearing ring				
Suction bell				
Pump casing				
Packing gland				

S-Satisfactory U-Unsatisfactory M-Marginal
All marginal and unsatisfactory items shall be described in the remarks.

* Indicates items that must be listed individually

_____
Signature of Inspector

_____
Firm

Sheet No. _____ of _____
Date_____

FACILITY ID. _____

ITEMS INSPECTED	CONDITION			REMARKS
	S	U	M	
Flanges & gaskets				
Lubrication system				
Preservation				
DP-1 Suction Valve *				
Valve				
Motor controller				
Operator				
Housing				
Flanges & gaskets				
Packing Gland				
Piping				
Reach rod				
Preservation				
DP-2 Suction Valve				
Valve				
Motor controller				
Operator				
Housing				
Flanges & gaskets				
Packing Gland				
Piping				
Reach rod				
Preservation				
DP Common Suction Valve from pump house				
Valve				
Motor controller				
Operator				
Housing				
Flanges & gaskets				

S-Satisfactory U-Unsatisfactory M-Marginal
All marginal and unsatisfactory items shall be described in the remarks.
* Indicates items that must be listed individually

_____
Signature of Inspector

_____
Firm

Sheet No. _____ of _____
Date_____

FACILITY ID. _____

ITEMS INSPECTED	CONDITION			REMARKS
	S	U	M	
Packing Gland				
Piping				
Reach rod				
Preservation				
DP Common Suction Valve from Suction Chamber				
Valve				
Motor controller				
Operator				
Housing				
Flanges & gaskets				
Packing Gland				
Piping				
Reach rod				
Preservation				
DP-1 Discharge Valve				
Valve				
Motor controller				
Operator				
Housing				
Flanges & gaskets				
Packing Gland				
Piping				
Reach rod				
Preservation				
DP-2 Discharge Valve				
Valve				
Motor controller				
Operator				
Housing				

S-Satisfactory U-Unsatisfactory M-Marginal
All marginal and unsatisfactory items shall be described in the remarks.
* Indicates items that must be listed individually

_____
Signature of Inspector

_____
Firm

Sheet No. _____ of _____

Date_____

FACILITY ID. _____

ITEMS INSPECTED	CONDITION			REMARKS
	S	U	M	
Flanges & gaskets				
Packing Gland				
Piping				
Reach rod				
Preservation				
DP-1 Discharge Check Valve				
Valve				
Housing				
Flanges & gaskets				
Non-slam mechanism				
DP-2 Discharge Check Valve				
Valve				
Housing				
Flanges & gaskets				
Non-slam mechanism				
Sump Pump A *				
Pump Motor				
Controller				
Float Switch				
Discharge Valve				
Check Valve				
Lubrication System				
Preservation				
Sump Pump B				
Pump Motor				
Controller				
Float Switch				
Discharge Valve				
Check Valve				

S-Satisfactory U-Unsatisfactory M-Marginal

All marginal and unsatisfactory items shall be described in the remarks.

* Indicates items that must be listed individually

_____
Signature of Inspector

_____
Firm

Sheet No. _____ of _____
Date_____

FACILITY ID. _____

ITEMS INSPECTED	CONDITION			REMARKS
	S	U	M	
Lubrication System				
Preservation				
Suction Chamber Sump Pump No. 1 *				
Pump				
Motor/controller				
Valves				
Piping				
Lubrication System				
Preservation				
Suction Chamber Sump Pump No. 2				
Pump				
Motor/controller				
Valves				
Piping				
Lubrication System				
Preservation				
3.3 Pump House Electrical Equipment				
Primary power panel				
Secondary power for drainage system				
Diesel Generator Operation				
Transfer bus				
Electrical panels and distribution system				
Security lighting				
Feeders/Controls				
Main Circuit Breaker				
Branch Circuit Breakers				
Transformers				
Main Control Panel				
Selector Switches				

S-Satisfactory U-Unsatisfactory M-Marginal
All marginal and unsatisfactory items shall be described in the remarks.
* Indicates items that must be listed individually

_____
Signature of Inspector

_____
Firm

Sheet No. _____ of _____
Date_____

FACILITY ID. _____

ITEMS INSPECTED	CONDITION			REMARKS
	S	U	M	
Indicator Lights				
Valve Indicators				
Power Disconnect Switches				
Trouble Indicator/horn				
Reset Buttons				
Relays				
Voltmeters				
Ammeters				
3.4 Pump House Misc Systems/Equipment				
Air compressors				
Air Flasks				
Control air piping and fittings				
Fire Extinguishers				
Fire Alarm Boxes				
Communications systems				
Primary				
Secondary				
Water Level Indicators				
Primary sensor/high water alarm				
Secondary sensor/high water alarm				
Backup power for secondary sensor/alarm				
Other alarms (list type and function)*				

S-Satisfactory U-Unsatisfactory M-Marginal
All marginal and unsatisfactory items shall be described in the remarks.

* Indicates items that must be listed individually

_____
Signature of Inspector

_____
Firm

INSPECTION CHECKLIST FOR MARINE RAILWAYS

G.1. SCOPE

G.1.1 Scope. This appendix contains a sample checklist for material surveys to be included in the certification report. This appendix is a mandatory part of the standard. The information contained herein is intended for compliance.

G.2. DEFINITIONS

G.2.1 Definitions. The definitions in section 3 of this document apply to this appendix.

G.3. REQUIREMENTS

G.3.1 General requirements. Checklists shall be developed from the provided samples and expanded or modified to address all structures and systems applicable to the facility.

G.3.2 Mechanical/electrical system requirements. Systems shall be visually inspected and operationally tested in order for the inspection to be considered complete.

NOTE: In the checklists where a "*" appears, this indicates that items shall be listed individually. In the case where UTs on individual beams are required, the individual beams shall be identified. This identification is not required for individual beams during visual inspections.

NOTE: The following is a sample checklist that is to be used for guidance only and should be expanded or modified to address all structures and systems applicable to the facility.

Sheet No. _____ of _____

Date_____

FACILITY ID. _____

ITEMS INSPECTED	CONDITION			REMARKS
	S	U	M	
1. STRUCTURE				
1.1 Cradle structure				
General condition				
Longitudinal beams/frames (timber or steel)*				
Steel splice plates (on timber)				
Fasteners				
Bottom chord				
Wheel bearing supports				
Transverse beams (timber or steel)*				
Steel splice plates (on timber)				
Fasteners				
Cradle section connections*				
Under-deck framework				
Block bearers				
Cradle decking				
Drawhead bridle				
Cradle shoe plate				
Wood/steel preservation				
Elevated walkways*				
Connection at cradle deck				
Supporting framework				
Cleats and shiphandling fittings				
1.2 Groundways and rails				
General condition				
Rails free of debris, silt, blast grit, etc.				
Cradle travel path free of debris				
Piles				

S-Satisfactory U-Unsatisfactory M-Marginal

All marginal and unsatisfactory items shall be described in the remarks.

* Indicates items that must be listed individually

_____
Signature of Inspector

_____
Firm

Sheet No. _____ of _____

Date_____

FACILITY ID. _____

ITEMS INSPECTED	CONDITION			REMARKS
	S	U	M	
Pile caps				
Steel/concrete track sections				
Track cross bracing				
Rail plates and fasteners				
Rail grade				
Rail alignment				
Roller system				
Rollers				
Spindles				
Bushings				
Spacers				
Roller frames				
Connections between roller frame sections				
Chain paths and guides				
Attachments at pier *				
Spud rails/chains *				
Spud shoes & pins *				
Wood/steel preservation				
1.3 Winch house/foundation				
General condition of winch house				
Lighting				
Security				
Condition of winch foundation				
Foundation anchor bolts				
Winch foundation structure bearing on groundways				
2. MECHANICAL EQUIPMENT				
2.1 Chains & sheaves				
Inhaul chain				

S-Satisfactory U-Unsatisfactory M-Marginal

All marginal and unsatisfactory items shall be described in the remarks.

* Indicates items that must be listed individually

_____
Signature of Inspector

_____
Firm

Sheet No. _____ of _____
Date_____

FACILITY ID. _____

ITEMS INSPECTED	CONDITION			REMARKS
	S	U	M	
Outhaul chain				
Chain connecting links				
Chain slack and fit				
Inhaul sheave on cradle*				
Sheave fasteners and attachment to cradle				
Outhaul sheaves on cradle*				
Sheave fasteners and attachment to cradle				
Sheave and chain preservation and wash down				
2.2 Hauling machinery				
Gearing				
Shafting				
Bearings				
Chain sprockets				
Locking pawl				
Winch motor				
Motor controller				
Electric brake				
Hand clutch				
Limit switches				
Voltmeter				
Ammeter				
Lubrication				
Preservation				
3. FIRE PROTECTION SYSTEM				
Fire pumps, motors, and controllers *				
Fire main piping and isolation valves				
Fire station hoses, nozzles, valves, fittings				
CO_2/dry chemical extinguishers				
Fire main pressure gauge				

S-Satisfactory U-Unsatisfactory M-Marginal
All marginal and unsatisfactory items shall be described in the remarks.
* Indicates items that must be listed individually

_____
Signature of Inspector

_____
Firm

Sheet No. _____ of _____
Date_____

FACILITY ID. _____

ITEMS INSPECTED	CONDITION			REMARKS
	S	U	M	
Flow and pressure				
4. MISCELLANEOUS MECHANICAL SYSTEMS				
Secondary method for securing cradle				
Capstans *				
Control air compressors and piping				
Ship handling system winches *				
Diesel generator engines and starting systems *				
5. ELECTRICAL POWER SYSTEMS				
Shore power system				
Diesel generator power system				
Shore power cables and supports				
Electrical panels and distribution system				
Backup power system				
Security lighting				
6. COMMUNICATION SYSTEMS				
Primary				
Secondary				
Alarms (list type and function)*				

S-Satisfactory U-Unsatisfactory M-Marginal
All marginal and unsatisfactory items shall be described in the remarks.
* Indicates items that must be listed individually

_____
Signature of Inspector

_____
Firm

INSPECTION CHECKLIST FOR VERTICAL LIFTS

H.1. SCOPE

H.1.1 Scope. This appendix contains a sample checklist for material condition surveys to be included in the certification report. This appendix is a mandatory part of the standard. The information contained herein is intended for compliance.

H.2. DEFINITIONS

H.2.1 Definitions. The definitions in section 3 of this document apply to this appendix.

H.3. REQUIREMENTS

H.3.1 General requirements. Checklists shall be developed from the provided samples and expanded or modified to address all structures and systems applicable to the facility.

H.3.2 Mechanical/electrical system requirements. Systems shall be visually inspected and operationally tested in order for the inspection to be considered complete.

NOTE: In the checklists where a "*" appears, this indicates that items shall be listed individually. In the case where UTs on individual beams are required, the individual beams shall be identified. This identification is not required for individual beams during visual inspections.

NOTE: The following is a sample checklist that is to be used for guidance only and should be expanded or modified to address all structures and systems applicable to the facility.

Sheet No. _____ of _____

Date_____

FACILITY ID. _____

ITEMS INSPECTED	CONDITION			REMARKS
	S	U	M	
1. STRUCTURE				
1.1 Platform structure				
General condition				
Main transverse beams				
Stiffeners				
Secondary transverse beams				
Stiffeners				
Longitudinal beams				
Connection between longitudinal sections				
Stiffeners				
Transfer rails				
Alignment & elevation				
Attachment to platform				
Decking				
Hoist sheaves				
Housing				
Bearings				
Lubrication				
Steel preservation				
1.2 Cradle structure				
General condition				
Main transverse beams				
Stiffeners				
Secondary transverse beams				
Stiffeners				
Longitudinal beams				

S-Satisfactory U-Unsatisfactory M-Marginal

All marginal and unsatisfactory items shall be described in the remarks.

* Indicates items that must be listed individually

_____
Signature of Inspector

_____
Firm

Sheet No. _____ of _____

Date_____

FACILITY ID. _____

ITEMS INSPECTED	CONDITION			REMARKS
	S	U	M	
Connection between longitudinal sections				
Stiffeners				
Wheels/rollers				
Spindles/axles				
Wheel blocks, shims, & fasteners				
Block bearers				
Steel preservation				
1.3 Hoist structure *				
General condition				
Concrete platform				
Piles				
Foundation anchors				
1.4 Basin/apron structure				
General condition				
Piles				
Pile caps				
Apron slab				
Cleats, bollards, fittings				
Sheet pile basin walls				

S-Satisfactory U-Unsatisfactory M-Marginal

All marginal and unsatisfactory items shall be described in the remarks.

* Indicates items that must be listed individually

_____
Signature of Inspector

_____
Firm

Sheet No. _____ of _____
Date_____

FACILITY ID. _____

ITEMS INSPECTED	CONDITION			REMARKS
	S	U	M	
Steel preservation				
2. MECHANICAL EQUIPMENT				
2.1 Hoists*				
Motor				
Gears				
Brakes				
Limit switches				
Load monitoring system				
Motor control system				
Wire rope				
Bearings				
Drum				
Pawls				
Lubrication				
Steel preservation				
2.2 Transfer system				
Hauling device *				
3. FIRE PROTECTION SYSTEM				
Fire pumps, motors, and controllers *				
Fire main piping and isolation valves				
Fire station hoses, nozzles, valves, fittings				
CO_2/dry chemical extinguishers				
Fire main pressure gauge				
Flow and pressure				
4. MISCELLANEOUS MECHANICAL SYSTEMS				
Capstans *				
Control air compressors and piping				
Ship handling system winches *				

S-Satisfactory U-Unsatisfactory M-Marginal
All marginal and unsatisfactory items shall be described in the remarks.
* Indicates items that must be listed individually

_____
Signature of Inspector

_____
Firm

Sheet No. _____ of _____
Date_____

FACILITY ID. _____

ITEMS INSPECTED	CONDITION			REMARKS
	S	U	M	
Diesel generator engines and starting systems *				
5. ELECTRICAL POWER SYSTEMS				
Shore power system				
Diesel generator power system				
Shore power cables and supports				
Electrical panels and distribution system				
Backup power system				
Security lighting				
6. COMMUNICATION SYSTEMS				
Primary				
Secondary				
Alarms (list type and function)*				

S-Satisfactory U-Unsatisfactory M-Marginal
All marginal and unsatisfactory items shall be described in the remarks.
* Indicates items that must be listed individually

_____
Signature of Inspector

_____
Firm

INSPECTION CHECKLIST FOR TRANSFER AND LAUNCH WAYS

I.1. SCOPE

I.1.1 Scope. This appendix includes a sample checklist for transfer and launch ways. This appendix is a mandatory part of the standard. The information contained herein is intended for compliance.

I.2. DEFINITIONS

I.2.1 Definitions. The definitions in section 3 of this document apply to this appendix.

I.3. REQUIREMENTS

I.3.1 General requirements. Checklists shall be developed from the provided samples and expanded or modified to address all structures and systems applicable to the facility.

I.3.2 Mechanical/electrical system requirements. Systems shall be visually inspected and operationally tested in order for the inspection to be considered complete.

NOTE: In the checklists where a "*" appears, this indicates that items shall be listed individually. In the case where UTs on individual beams are required, the individual beams shall be identified. This identification is not required for individual beams during visual inspections.

NOTE: The following is a sample checklist that is to be used for guidance only and should be expanded or modified to address all structures and systems applicable to the facility.

Sheet No. _____ of _____

Date_____

FACILITY ID. _____

ITEMS INSPECTED	CONDITION			REMARKS
	S	U	M	
1. STRUCTURE				
1.1 Land level transfer way no. 1				
Piling				
Pile caps/grade beams				
Track plate/rails				
Alignment and elevation (settlement)				
Fasteners				
Concrete slab				
Cross-over beams to dry dock/railway/lift				
Connections to land/dock structure				
System for securing/positioning dry dock in place				
Landing grid for dry dock				
1.2 Inclined launch way no. 2				
Piling				
Pile caps/grade beams				
Inboard concrete slab				
Elevated groundways				
Concrete slab				
Support columns				
Support beams				
Concrete sliding ways				
Concrete slab				
Ribbands				
Sliding surface				
Cross-members between sliders				
Launch mechanism				
Connections to launch way				
Trigger assembly				

S-Satisfactory U-Unsatisfactory M-Marginal

All marginal and unsatisfactory items shall be described in the remarks.

* Indicates items that must be listed individually

_____
Signature of Inspector

_____
Firm

Sheet No. _____ of _____
Date_____

FACILITY ID. _____

ITEMS INSPECTED	CONDITION			REMARKS
	S	U	M	
Burn-off plates				
Closure Gate				
Gate structure and plating				
Gate seal and sealing surface on ways				
Flooding valve(s) in gate				
Secondary valve closure method (blanks)				
Gate lifting system (slings, eyes)				
1.3 Blocking				
Longitudinal shoring on inclined ways				
Fore poppet				
Aft poppet				
Sliding ways timbers and fasteners				
Wedges				
2. TRANSFER SYSTEM				
Carriage frame				
Steel strong backs/cradles				
Blocking				
Wheels, rollers, and roller frames				
Wheel bearings				
Carriage propulsion system and controls				
Lubrication				
3. FIRE PROTECTION SYSTEM				
Fire pumps, motors, and controllers *				
Fire main piping and isolation valves				
Fire station hoses, nozzles, valves, fittings				
CO_2/dry chemical extinguishers				
Fire main pressure gauge				
Flow and pressure				

S-Satisfactory U-Unsatisfactory M-Marginal
All marginal and unsatisfactory items shall be described in the remarks.
* Indicates items that must be listed individually

_____
Signature of Inspector

_____
Firm

Sheet No. _____ of _____

Date_____

FACILITY ID. _____

ITEMS INSPECTED	CONDITION			REMARKS
	S	U	M	
4. MISCELLANEOUS MECHANICAL SYSTEMS				
Capstans *				
Control air compressors and piping				
Ship handling system winches *				
Diesel generator engines and starting systems *				
5. ELECTRICAL POWER SYSTEMS				
Shore power system				
Diesel generator power system				
Shore power cables and supports				
Electrical panels and distribution system				
Backup power system				
Security lighting				
6. COMMUNICATION SYSTEMS				
Primary				
Secondary				
Alarms (list type and function)*				

S-Satisfactory U-Unsatisfactory M-Marginal

All marginal and unsatisfactory items shall be described in the remarks.

* Indicates items that must be listed individually

_____
Signature of Inspector

_____
Firm

ACCIDENT AND INCIDENT REPORT FORM

J.1. SCOPE

J.1.1 Scope. This appendix establishes the accident and incident report format. This appendix is a mandatory part of the standard. The information contained herein is for compliance.

J.2. DEFINITIONS

J.2.1 Definitions. The definitions in section 3 of this document apply to this appendix.

J.3. REQUIREMENTS

J.3.1 General requirements. This appendix contains a sample format for reporting accidents and incidents as required by 4.7.3.

ACTIVITY_____ DATE OF REPORT_____

REPORT NO._____ DATE OF ACCIDENTAL/INCIDENT_____

DRY DOCK I.D._____ TIME OF ACCIDENT/INCIDENT_____

SHIP INVOLVED_____ FINAL_____

PRELIMINARY_____

1. SUMMARY OF ACCIDENT/INCIDENT:

2. DESCRIPTION OF ACCIDENT/INCIDENT, GENERAL DESIGNATION AND DISCUSSION OF NATURE AND APPARENT CAUSE:

(DESIGN _____ MATERIAL _____ PERSONNEL _____ PROCEDURE _____)

A. DESCRIPTION OF ACCIDENT/INCIDENT:

B. DISCUSSION OF APPARENT CAUSE:

3. OPERATING CONDITIONS OF DOCK AND/OR SHIP IN DOCK OR BEING DOCKED AND/OR STATUS OF SYSTEM OR COMPONENT AT TIME OF ACCIDENT/INCIDENT:

4. IMMEDIATE TEMPORARY CORRECTIVE ACTION TAKEN AND RESULTS:

5. PERMANENT CORRECTIVE ACTION:

6. EFFECT ON FACILITY'S CAPACITY AND CAPABILITY FOR SAFE OPERATION:

7. AREAS REQUIRING FURTHER EVALUATION:

8. FOLLOW-UP ACTIONS TO BE TAKEN TO ENSURE PERMANENT CORRECTIVE ACTIONS ARE IMPLEMENTED AND EFFECTIVE:

9. SIMILAR ACCIDENTS/INCIDENTS AT THIS ACTIVITY/DOCK:

10. OUTSTANDING DEFICIENCIES:

11. PERSONNEL INJURIES:

12. COST OF REPAIRS:

REPORT ORIGINATED BY:

TITLE/ORIGINATING ACTIVITY/DATE:

REPORT APPROVED BY:

TITLE/ORIGINATING ACTIVITY/DATE:

BLOCK RATING CRITERIA

K.1. SCOPE

K.1 Scope. Docking blocks used in block builds for Navy ships shall meet the requirements of this appendix. This appendix is a mandatory part of the standard. The information contained herein is intended for compliance.

K.2. DEFINITIONS

K.2.1 Concrete defect definitions.

K.2.1.1 Delamination. Splitting or separation of laminated layers of composite materials. For docking blocks, delamination will be visually apparent on the block surface.

K.2.1.2 Diagonal cracking. Cracks in the concrete structures that do not run vertically or horizontally.

K.2.1.3 Hairline cracking. Cracks in concrete structures that have widths that are barely visible.

K.2.1.4 Horizontal cracking. Cracks in a concrete structure that run perpendicular to the main reinforced steel (vertical rebar). These cracks can occur over horizontal rebar that ties the vertical rebar together.

K.2.1.5 Pattern cracking. Cracks on the surface of concrete structures that follow a pattern (usually over the top of corroded reinforced steel) that occurs due to the expansion of the inner volume of the concrete structure.

K.2.1.6 Spalling. A fragment of the concrete that has broken off due to weather, pressure, and/or expansion of the inner volume of the concrete structure.

K.2.1.7 Vertical cracking. Cracks in a concrete structure that run in line with the main reinforced steel (vertical rebar) in the concrete.

K.2.2 Timber defect definitions.

K.2.2.1 Checks. A separation of the wood occurring across or through the annual growth rings and usually the result of seasoning.

K.2.2.2 Decay. A disintegration of the wood substance due to action of wood destroying fungi, also known as rot.

K.2.2.3 Knots. A portion of a branch or limb that has become incorporated in a piece of lumber. Knots may result in void spaces in the timber that reduce the cross-section of the timber.

K.2.2.4 Permanent deformation or crushing. An inelastic reduction in the cross-section of the timber due to loading that exceeds the proportional limit of the wood.

K.2.2.5 Shake. A lengthwise separation of the wood fibers parallel to the grain that occurs between annual growth rings.

K.2.2.6 Splits. A separation of the wood that extends between the faces of a piece of timber.

K.2.3 Qualified engineer. Structural Engineer or Naval Architect who has experience performing structural calculations with the materials being evaluated (i.e., concrete, steel, and timber).

K.2.4 Qualified inspector. Individual meeting formal qualification requirements established by the engineering authority for the drydocking activity. The individual may be qualified by postion such as docking officer, dockmaster or dry dock engineering technician provided that the position qualifications include block inspection.

K.3. REQUIREMENTS

K.3.1 General requirements. Docking blocks shall be inspected by a qualified inspector prior to constructing the block build for each Navy ship. If the block has no obvious defects, it will be considered satisfactory and will not need to be inspected in detail. If there are cracks or other defects, the block shall be inspected in detail to determine if it is satisfactory or unsatisfactory. If the concrete, timber, fasteners, or steel are determined to be unsatisfactory according to the criteria of this appendix, the component shall be replaced or a qualified engineer shall provide an evaluation or calculations to demonstrate that the component has a satisfactory safety factor for its intended purpose in order to use the block for docking Navy ships. Documentation showing that the blocks are satisfactory for each docking shall be retained by the activity. Blocks that are not being used for docking Navy ships do not need to be inspected.

a. The evaluation or calculations performed by a commercial activity shall be approved by the SUPSHIP/RMC engineering representative.

b. For a naval shipyard, maintenance repair facility or other naval activity with engineering support, the evaluation or calculations shall be provided by the shipyard and approved by the shipyard local engineering authority and Docking Officer.

c. For a naval activity that does not have local engineering support, the evaluation or calculations shall be approved by a senior member of the docking organization and the Docking Officer. If the Docking Officer or shipyard engineering authority determines that further engineering assistance is required, it shall be obtained from the appropriate planning yard.

d. Blocks shall be inspected at least every two years if they are used for a ship that has a lay period longer than two years or if a ship is docked immediately after one is undocked and the same block build is used. Blocks that are inspected during the lay period in order to meet the two year maximum inspection period and that are determined to be unsatisfactory shall be evaluated by the engineering authority as to whether immediate replacement is warranted. The evaluation shall consider that the wedging of a replacement block under the drydocked ship may be less desirable than leaving the block in place. Block loading calculations that omit unsatisfactory blocks found during the lay period shall be performed to justify leaving the blocks in place. The calculations shall demonstrate that the dry dock block loading capacity and the allowable block stresses are within allowable limits. Blocks may be added where space and work requirements permit in order to mitigate the unsatisfactory conditions.

K.3.2 Dry dock block evaluation. The paragraphs below describe how to evaluate the blocks of the drydock. Docking blocks do not need to be disassembled for inspection. Butted blocks do not need to be inspected between dockings of the same ship class. In addition, only surfaces that are visible on composite blocks shall be inspected. However, docking blocks that will be in use for extended lay periods lasting over eighteen months shall be rigorously examined in order to assure that the blocks will remain acceptable for the time they are in use. If the visible surfaces of the butted blocks exhibit unsatisfactory conditions, the blocks shall be separated and the remainder of the blocks shall be evaluated.

K.3.2.1 Unsatisfactory concrete. An unsatisfactory concrete portion of the block will show very advanced damage or deterioration. More widespread failures are likely to occur. Advanced damage or deterioration includes the defects described below. If there is exposed reinforced steel bars (rebar), the block shall be replaced or evaluated by a qualified engineer for its intended use. A block that deteriorates and becomes unsatisfactory while in use shall be evaluated by a qualified engineer to determine its adequacy for use until the ship undocks. Appropriate action shall be taken to mitigate any loss in capacity as determined by the engineer. Concrete will be given a rating of unsatisfactory if two of the four following conditions are observed:

a. Vertical cracks, horizontal cracks, and diagonal cracks having fine to medium widths greater than the following:

(1) One crack greater than ⅜-inch thick and greater than 50 percent of the block's length, width, or height.

(2) Two cracks greater than ¼-inch thick and greater than 50 percent of the block's length, width, or height.

(3) Three cracks or more, greater than ⅛-inch thick and greater than 50 percent of the block's length, width, or height.

b. Pattern cracking on the concrete portion has an accumulated coverage of greater than 60 percent of one side of the concrete block.

c. Spalling is greater than 10 percent of the concrete volume. This includes spalling at the corners.

d. There are portions where the spalling/loss of section have caused the rebar to be exposed. The inspector shall note if the rebar shows moderate to advanced signs of corrosion.

K.3.2.2 Unsatisfactory fasteners. Unsatisfactory fasteners show severe deterioration and loss in cross-section to the point that the fasteners no longer fulfill their intended use. There are fasteners missing in critical places on the block structure. These places include where the soft cap or oak is being attached to concrete or each other. Fasteners that are in unsatisfactory condition shall be replaced or evaluated by a qualified engineer for their intended use. Fasteners that are sealed for corrosion protection need not be exposed for inspection unless the blocks show signs that the fastened elements are separating. The clearance between the ship's hull and the soft cap fasteners and batten strips shall be checked for adequacy. The engineering authority shall establish the required clearance based on the soft cap thickness and expected amount of deflection or crush. The fasteners will be given a rating of unsatisfactory if both of the following conditions are observed:

a. More than 10 percent of the fasteners show moderate to severe signs of deterioration, corrosion or loss in cross-section. Moderate deterioration or corrosion would be if a spike head was almost completely corroded away or a portion of a lag screw head was corroded away.

b. More than 5 percent of the fasteners are missing.

K.3.2.3 Unsatisfactory timber. Unsatisfactory timber sections of the block display very advanced deterioration. There are localized to widespread areas where sections of timber are missing. More widespread failures are possible or likely to occur. Unsatisfactory timber structures shall be replaced or evaluated by a qualified engineer for their intended use. If a timber on a composite block is determined to be unsatisfactory, the composite block shall be acceptable for use as long as the unsatisfactory timber is not loaded. Very advanced deterioration is described in detail through the below defects. A block that deteriorates and becomes unsatisfactory while in use shall be assessed by a qualified engineer to determine its adequacy for use until the ship undocks. Appropriate action shall be taken to mitigate any loss in capacity as determined by the engineer. Timber will be given a rating of unsatisfactory if two of the five following conditions are observed:

a. Large checks and cracks present. Some splits are also noticed throughout the timber. At ends of timbers, one can see visible light through the crack.

(1) One crack greater than ⅝-inch thick and length greater than 50 percent of the log's length.

(2) Two cracks greater than ½-inch thick and lengths greater than 50 percent of the log's length.

(3) Three cracks or more greater than ⅜-inch thick and lengths greater than 50 percent of the log's length.

b. Shakes having widths greater than ¾-inch and lengths greater than 33 percent of the log's length.

c. Decay identified beyond the knots of the timbers. Decay is not permissible in the timber within six inches of the loaded area of the soft cap.

d. Timber sections show signs of visual permanent deformation.

e. There is a reduction in the cross-sectional area of the timber due to deterioration greater than 15 percent.

K.3.2.3.1 Unsatisfactory soft cap timber. Unsatisfactory soft cap timber sections of the block display advanced deterioration. There are areas where sections of soft cap timber are missing or deformed. More widespread failures are possible or likely to occur. These soft cap timber structures shall be replaced or evaluated by a qualified engineer for their intended use. Soft cap timber will be given a rating of unsatisfactory if any of the following conditions are observed:

a. Checks, shakes, and cracks present (greater than ⅛-inch wide). Some splits are also noticed throughout the timber.

b. Decay found in localized to major portions of the timber soft caps. Any decay found in timber soft caps is a serious condition.

c. After the crushed portions of the soft cap are removed, the soft cap does not remain at least 2 inches thick. Soft cap timber sections show signs of visual permanent deformation.

K.3.2.4 Unsatisfactory steel. Unsatisfactory steel sections or blocks show excessive corrosion of the steel beams, steel structure or welds have fatigue cracks, or structure has permanent deformation or buckling due to loading beyond the elastic limit. The corrosion repair criteria shall be determined for steel structure as described in 4.5.2.c.

K.3.3 Checklist. The following is a sample inspection checklist for docking blocks for use by the qualified inspector to be included in the certification report and can be used to document satisfactory blocks prior to each Navy ship docking. One checklist may be used for the entire set of blocks in the certification report since the blocks will also be inspected prior to each Navy ship docking. One checklist may be used to document satisfactory blocks prior to each Navy ship docking. This checklist shall also be used to identify unsatisfactory blocks or components that require evaluation by a qualified engineer prior to being used to drydock Navy ships. This checklist is a material condition checklist and does not replace the block build check performed by the Facility Operations Supervisor. Blocks that are removed from service need not be documented.

Sheet No. ___ of ____

Date_____

FACILITY ID. _____

ITEMS INSPECTED	CONDITION			REMARKS
	S	U	NA	
BLOCK TYPE				
1. COMPOSITE BLOCK				
1.1 Concrete				
Vertical, horizontal, and diagonal cracks				
Pattern cracking				
Spalling				
1.2 Fasteners				
1.3 Timber				
Cracks, checks and splits				
Shakes				
Decay				
Deformation				
Reduction in cross-sectional area				
1.4 Soft Cap Timber				
1.5 Steel sections				
2. CONCRETE BLOCK				
3. TIMBER BLOCK				
4. STEEL BLOCK				
5. CRIBBING METHOD				
6. CONNECTIONS TO HAULING CHAINS				

S-Satisfactory U-Unsatisfactory

All unsatisfactory items shall be described in the remarks.

_____
Signature of Inspector

_____
Firm

Preparing Activity:
Navy – SH
(Project 1950-2009-001)

NOTE: The activities listed above were interested in this document as of the date of this document. Since organizations and responsibilities can change, you should verify the currency of the information above using the ASSIST Online database at http://assist.daps.dla.mil.