INCH-POUND
MIL-STD-202G
w/CHANGE 2
28 June 2013
SUPERSEDING
MIL-STD-202G
NOTICE 1
18 July 2003

DEPARTMENT OF DEFENSE

TEST METHOD STANDARD

ELECTRONIC AND ELECTRICAL COMPONENT PARTS

AMSC N/A

FSC 59GP

FOREWORD

1. This military standard is approved for use by all Departments and Agencies of the Department of Defense.

2. Comments, suggestions, or questions on this document should be addressed to DLA Land and Maritime, ATTN: VAT, Post Office Box 3990, Columbus, OH 43218-3990 or emailed to capacitorfilter@dla.mil. Since contact information can change, you may want to verify the currency of this address information using the ASSIST Online database at https://assist.dla.mil.

SUMMARY OF CHANGE 2 MODIFICATIONS

1. Removed the distribution statement from the title page.

2. Updated contact information in the foreword.

3. Incorporated modifications from notice 1.

4. Changed the Uniform Resource Locator (URL) for the Acquisition Streamlining and Standardization Information System (ASSIST) database throughout the standard.

5. Added “of this standard” to 2.1 for clarification.

6. Updated 2.2 and 2.3 in accordance with MIL-STD-962 (Standard Practice, Defense Standards Format and Content) and updated the referenced documents throughout the standard.

7. Changed 2.4 to include the words “unless otherwise noted herein or in the contract” in the first sentence.

8. Updated 6.5 to indicate that the margins of this standard are marked with vertical lines to indicate modifications generated by this change.

9. Added an allowance to use reagent grade hydrochloric acid to adjust the pH of the salt solution in paragraph 3 of method 101 (Salt Atmosphere (corrosion)).

10. Corrected the metric conversion for .625 inch in method 111, page 3, figure 111-1.

11. Corrected the metric conversion for .94 inch in method 203, page 5, figure 203-3.

12. Added “Dimensions are given in inches” and “and are given for general information only” to note 1 of method 203, page 6, figure 203-4.

13. Added “Dimensions are given in inches” to note 1 and “and are given for general information only” to note 2 of method 206, page 2, figure 206-1.

14. Corrected the metric conversion for 26.50 inches in method 207, page 15, figure 207-6.

15. Added “Dimensions are given in inches” to note 1 and “and are given for general information only” to note 2 of method 211, page 6, figure 211-4.

16. Updated “Air Force-11” to “Air Force-85” in the concluding material.

17. Added an advisory note underneath the concluding material cautioning that the information in the concluding material may have changed since the date of this document.

18. Deleted DD Form 1426 from the end of this standard.

CONTENTS

PARAGRAPH		Page
1.	SCOPE	1
1.1	Purpose	1
1.2	Test method numbering system	1
1.3	Method of reference	1
2.	APPLICABLE DOCUMENTS	2
2.1	General	2
2.2	Government documents	2
2.3	Non-Government publications	3
2.4	Order of precedence	3
3.	DEFINITIONS	3
4.	GENERAL REQUIREMENTS	4
4.1	Test requirements	4
4.2	Test conditions	4
4.3	Reference conditions	4
4.4	Calibration requirements	4
5.	DETAILED REQUIREMENTS	4
6.	NOTES	4
6.1	Intended use	4
6.2	Sequence of tests	5
6.3	Chemical listing	5
6.4	Subject term (key word) listing	6
6.5	Change notations	6
	NUMERICAL INDEX OF TEST METHODS	7

1. SCOPE

1.1 Purpose. This standard establishes uniform methods for testing electronic and electrical component parts, including basic environmental tests to determine resistance to deleterious effects of natural elements and conditions surrounding military operations, and physical and electrical tests. For the purpose of this standard, the term "component parts" includes such items as capacitors, resistors, switches, relays, transformers, inductors, and others. This standard is intended to apply only to small component parts, weighing up to 300 pounds or having a root mean square test voltage up to 50,000 volts unless otherwise specifically invoked. The test methods described herein have been prepared to serve several purposes:

a. To specify suitable conditions obtainable in the laboratory that give test results equivalent to the actual service conditions existing in the field, and to obtain reproducibility of the results of tests. The tests described herein are not to be interpreted as an exact and conclusive representation of actual service operation in any one geographic location, since the only true test for operation in a specific location is an actual service test at that point.

b. To describe in one standard (1) all of the test methods of a similar character which appeared in the various joint or single-service electronic and electrical component parts specifications, (2) those test methods which are feasible for use in several specifications, and (3), the recognized extreme environments, particularly temperatures, barometric pressures, etc., at which component parts will be tested under some of the presently standardized testing procedures. By so consolidating, these methods may be kept uniform and thus result in conservation of equipment, man-hours, and testing facilities. In achieving these objectives, it is necessary to make each of the general tests adaptable to a broad range of electronic and electrical component parts.

c. The test methods described herein for environmental, physical, and electrical tests shall also apply, when applicable, to parts not covered by an approved military specification, military sheet form standard, specification sheet, or drawing.

1.2 Test method numbering system. The test methods are designated by numbers assigned in accordance with the following system:

1.2.1 Class of tests. The tests are divided into three classes: Test methods numbered 101 to 199 inclusive, cover environmental tests; those numbered 201 to 299 inclusive, cover physical characteristics tests; and those numbered 301 to 399 inclusive, cover electrical characteristics tests. Within each class, test methods are serially numbered in the order in which they are introduced into this standard.

1.2.2 Revision of test methods. Revisions of test methods are indicated by a letter following the method number. For example, the original number assigned to the moisture resistance test method is 106; the first revision of that method is 106A, the second revision, 106B, etc.

1.3 Method of reference. When applicable, test methods contained herein shall be referenced in the individual specification by specifying this standard, the method number, and the details required in the summary paragraph of the referenced method. To avoid the necessity for changing specifications which refer to this standard, the revision letter following the method number shall not be used when referencing test methods. For example, use “Method 106”, not “Method 106A”.

2. APPLICABLE DOCUMENTS

2.1 General. The documents listed in this section are specified in sections 3, 4, 5, and individual test methods of this standard. This section does not include documents cited in other sections of this standard or recommended for additional information or as examples. While every effort has been made to ensure the completeness of this list, document users are cautioned that they must meet all specified requirements documents cited in sections 3, 4, 5, and the individual test methods of this standard, whether or not they are listed.

2.2 Government documents.

2.2.1 Specifications, standards, and handbooks. The following specifications, standards, and handbooks form a part of this document to the extent specified herein. Unless otherwise specified, the issues of these documents are those cited in the solicitation or contract.

FEDERAL SPECIFICATIONS

QQ-B-654	-	Brazing Alloys, Silver
QQ-S-698	-	Steel, Sheet and Strip, Low Carbon
TT-I-735	-	Isopropyl Alcohol

DEPARTMENT OF DEFENSE SPECIFICATIONS

MIL-PRF-680	-	Degreasing Solvent
MIL-S-901	-	Shock Tests, H.I. (High Impact), Shipboard Machinery, Equipment, and Systems, Requirements For
MIL-DTL-1222	-	Studs, Bolts, Screws and Nuts for Applications Where a High Degree Of Reliability Is Required; General Specification For
MIL-I-24768/14	-	Insulation, Plastic, Laminated, Thermosetting, Cotton-Fabric-Base, Phenolic-Resin (FBG)

(Copies of these documents are available online at http://quicksearch.dla.mil or from the Standardization Document Order Desk, 700 Robbins Avenue, Building 4D, Philadelphia, PA 19111-5094.)

2.2.2 Other government documents, drawings, and publications. The following other government documents, drawings, and publications form a part of this document to the extent specified herein. Unless otherwise specified, the issues are those cited in the solicitation.

CODE OF FEDERAL REGULATIONS (CFR)

10 CFR 20	-	Standards For Protection Against Radiation
10 CFR 30	-	Rules of General Applicability to Domestic Licensing of Byproduct Material
10 CFR 31	-	General Domestic Licenses For Byproduct Material
10 CFR 32	-	Specific Domestic Licenses to Manufacture or Transfer Certain Items Containing Byproduct Material

(Copies of these documents are available online at www.nrc.gov or from the Public Document Room, Nuclear Regulatory Commission, PDR, O1F13, Washington DC 20555.)

2.3 Non-Government publications. The following documents form a part of this document to the extent specified herein. Unless otherwise specified, the issues of these documents are those cited in the solicitation or contract.

ACOUSTICAL SOCIETY OF AMERICA (ASA)

ASA S2.2	-	Methods for the Calibration of Shock and Vibration Pickups

(Copies of this document are available online at http://asa.aip.org or from ASA - Acoustical Society of America, 2 Huntington Quadrangle, Suite 1NO1, Melville, NY 11747.)

ASSOCIATION CONNECTING ELECTRONIC INDUSTRIES (IPC)

IPC 4101	-	Specification For Base Materials For Rigid and Multilayer Printed Boards
J-STD-002	-	Solderability Tests For Component Leads, Terminations, Lugs, Terminals and Wires
J-STD-004	-	Requirements For Soldering Fluxes
J-STD-005	-	Requirements For Soldering Pastes
J-STD-006	-	Requirements For Electronic Grade Solder Alloys and Fluxed and Non-Fluxed Solid Solders For Electronic Soldering Applications

(Copies of these documents are available online at www.IPC.org or from IPC, 3000 Lakeside Drive, Suite 309 S, Bannockburn, IL 60015.)

ASTM INTERNATIONAL (ASTM)

ASTM A519	-	Standard Specification For Seamless Carbon and Alloy Steel Mechanical Tubing

(Copies of this document are available online at www.astm.org or from ASTM, 100 Barr Harbor Drive, West Conshohocken, PA 19428-2959.)

NATIONAL CONFERENCE OF STANDARDS LABORATORIES (NCSL)

NCSL Z540.3	-	Requirements for the Calibration of Measuring and Test Equipment

(Copies of this document are available online at www.ncsli.org or from NCSL International, 1800 30th Street, Suite 305, Boulder, CO 80701-1026.)

2.4 Order of precedence. Unless otherwise noted herein or in the contract, in the event of a conflict between the text of this document and the references cited herein, the text of this document takes precedence. Nothing in this document, however, supersedes applicable laws and regulations unless a specific exemption has been obtained.

3. DEFINITIONS

This section is not applicable to this standard.

4. GENERAL REQUIREMENTS

4.1 Test requirements. The requirements which must be met by the component parts subjected to the test methods described herein are specified in the individual specifications. Whenever this standard conflicts with the individual specification, the latter shall govern.

4.2 Test conditions. Unless otherwise specified herein, or in the individual specification, all measurements and tests shall be made at temperatures of 15°C to 35°C (59°F to 95°F) and at ambient air pressure and relative humidity. Whenever these conditions must be closely controlled in order to obtain reproducible results, for referee purposes, a temperature of 25°C, +0°C, -2°C (77°F, +0°F, -3.6°F), relative humidity of 50 ±2 percent, and atmospheric pressure of 650 to 800 millimeters of mercury shall be specified.

4.2.1 Permissible temperature variation in environmental chambers. When chambers are used, specimens under test shall be located only within the working area defined as follows:

a. Temperature variation within working area: The controls for the chamber shall be capable of maintaining the temperature of any single reference point within the working area within ±2°C (3.6°F).

b. Space variation within working area: Chambers shall be so constructed that, at any given time, the temperature of any point within the working area shall not deviate more than 3°C (5.4°F) from the reference point except for the immediate vicinity of specimens generating heat.

4.3 Reference conditions. Reference conditions as a base for calculations shall be 25°C (77°F) for temperature, or an alternate temperature of 20°C (68°F), 760 millimeters of mercury for air pressure, and a relative humidity of 50 percent.

4.4 Calibration requirements. Calibration shall be applied to those items of measuring and test equipment used to assure product compliance with specifications and contractual requirements. Calibration shall be performed in accordance with the requirements of NCSL Z540.3 or equivalent. Calibrated items shall be controlled, used, and stored in a manner suitable to protect calibration integrity. Test equipment requiring calibration shall be identified and labeled in accordance with NCSL Z540.3 or equivalent.

5. DETAILED REQUIREMENTS

This section is not applicable to this standard.

6. NOTES

(This section contains information of a general or explanatory nature which may be helpful, but is not mandatory).

6.1 Intended use. This test method standard specifies uniform procedures for the environmental, physical, and electrical testing of electronic and electrical component piece parts. It is intended as a reference document for test requirements called out in military component specifications and when specified, in other procurement specifications and drawings.

6.2 Sequence of tests. The sequence of tests that follow is provided for guidance to specification writers to emphasize the philosophy that parts be mechanically and thermally stressed prior to being subjected to a moisture resistance test. Within any of the three groups and subgroups, the order is preferred but not mandatory. It is recommended that this sequence be followed in all new specifications and when feasible, in revisions of existing specifications. In the case of hermetically sealed parts, when a moisture resistance test is not required, a high sensitivity seal test may be used in lieu of the moisture resistance test.

Group I (all samples)
- Visual inspection
- Mechanical inspection
- Electrical measurements
- Hermetic seal test (if applicable)

Group IIa (part of a sample)
- Shock
- Acceleration
- Vibration

Group IIb (part of a sample)
- Resistance to soldering heat
- Terminal Strength
- Thermal Shock

Group III (all units which have passed group II tests)
- Moisture resistance or seal test on hermetically sealed parts

6.3 Chemical listing. The following is a list of chemicals and their chemical abstracts service (CAS) registry number identified for use in MIL-STD-202 test methods:

Material	CAS number	Test method
ethylbenzene	100-41-4	215
fluorocarbon/perfluorocarbon	----------	107, 112, 210
helium	7440-59-7	112
hydrochloric acid	47-01-0	101
isopropyl alcohol	67-63-0	215
kerosene	8008-20-6	215
krypton-85	13983-27-2	112
mineral oil	8012-95-1	112
mineral spirits	8052-41-3	215
monoethanolamine	141-43-5	215
n-hexane	110-54-3	109
peanut oil	8002-03-7	112
propane	74-98-6	111
propylene glycol monomethylether	107-98-2	215
silicone oil	63148-58-3	112
sodium chloride	7647-14-5	104
sodium hydroxide	1310-73-2	101
terpene	----------	215

6.4 Subject term (key word) listing.

Acceleration
Barometric pressure
Capacitance
Contact chatter/resistance
Current noise
Current switching
DC resistance
Dielectric withstanding voltage
Explosion
Flammability
Humidity
Immersion
Insulation resistance
Life
Moisture resistance
PIND
Quality factor
Radiographic inspection
Random drop
Resistance-temperature characteristic
Resistance to soldering heat
Resistance to solvents
Salt atmosphere
Sand and dust
Shock
Solderability
Terminal strength
Thermal shock
Vibration
Voltage coefficient

6.5 Changes from previous issue. The margins of this standard are marked with vertical lines to indicate where changes from the previous issue were made. This was done as a convenience only and the Government assumes no liability whatsoever for any inaccuracies in these notations. Bidders and contractors are cautioned to evaluate the requirements of this document based on the entire content irrespective of the marginal notations.

NUMERICAL INDEX OF TEST METHODS

Test Method Number	Date	Title	
		Environmental tests (100 class)	
101E	8 February 2002	Salt atmosphere (corrosion)	(formerly called salt spray)
102A	Cancelled	Superseded by Method 107	(see note on Method 102)
103B	12 September 1963	Humidity (steady state)	
104A	24 October 1956	Immersion	
105C	12 September 1963	Barometric pressure (reduced)	
106G	8 February 2002	Moisture resistance	
107G	28 March 1984	Thermal shock	
108A	12 September 1963	Life (at elevated ambient temperature)	
109C	8 February 2002	Explosion	
110A	16 April 1973	Sand and dust	
111A	16 April 1973	Flammability (external flame)	
112E	11 October 1988	Seal	
		Physical characteristics tests (200 class)	
201A	24 October 1956	Vibration	
202D	Cancelled	Superseded by Method 213	(see note on Method 202)
203C	8 February 2002	Random drop	
204D	1 April 1980	Vibration, high frequency	
205E	Cancelled	Superseded by Method 213	(see note on Method 205)
206	12 September 1963	Life (rotational)	
207B	8 February 2002	High-impact shock	
208H	31 January 1996	Solderability	
209	18 May 1962	Radiographic inspection	
210F	8 February 2002	Resistance to soldering heat	
211A	14 April 1969	Terminal strength	
212A	16 April 1973	Acceleration	
213B	16 April 1973	Shock (specified pulse)	
214A	28 March 1984	Random vibration	
215K	8 February 2002	Resistance to solvents	
216	Cancelled	Superseded by Method 210	(see note on Method 216)
217A	8 February 2002	Particle impact noise detection (PIND)	
		Electrical characteristics tests (300 class)	
301	6 February 1956	Dielectric withstanding voltage	
302	6 February 1956	Insulation resistance	
303A	18 July 2003	DC resistance	
304	24 October 1956	Resistance temperature characteristic	
305A	18 July 2003	Capacitance	
306	24 October 1956	Quality factor (Q)	
307	24 October 1956	Contact resistance	
308	29 November 1961	Current-noise test for fixed resistors	
309	27 May 1965	Voltage coefficient of resistance determination procedure	
310	20 January 1967	Contact-chatter monitoring	
311	14 April 1969	Life, low level switching	
312	16 April 1973	Intermediate current switching	

CLASS 100

ENVIRONMENTAL TESTS

METHOD 101E

SALT ATMOSPHERE (CORROSION)
(formerly Salt Spray (Corrosion))

1. PURPOSE. The salt-spray test, in which specimens are subjected to a fine mist of salt solution, has several useful purposes when utilized with full recognition of its deficiencies and limitations. Originally proposed as an accelerated laboratory corrosion test simulating the effects of seacoast atmospheres on metals, with or without protective coatings, this test has been erroneously considered by many as an all-purpose accelerated corrosion test, which if "withstood successfully" will guarantee that metals or protective coatings will prove satisfactory under any corrosive condition. Experience has since shown that there is seldom a direct relationship between resistance to salt atmosphere corrosion and resistance to corrosion in other media, even in so-called "marine" atmospheres and seawater. However, some idea of the relative service life and behavior of different samples of the same (or closely related) metals or of protective coating-base metal combinations in marine and exposed seacoast locations can be gained by means of the salt atmosphere test, provided accumulated data from correlated field service tests and laboratory salt atmosphere tests show that such a relationship does exist, as in the case of aluminum alloys. (Such correlation tests are also necessary to show the degree of acceleration, if any, produced by the laboratory test). The salt atmosphere test is generally considered unreliable for comparing the general corrosion resistance of different kinds of metals or coating-metal combinations, or for predicting their comparative service life. The salt atmosphere test has received its widest acceptance as a test for evaluating the uniformity (specifically, thickness and degree of porosity) of protective coatings, metallic and nonmetallic, and has served this purpose with varying amounts of success. In this connection, the test is useful for evaluating different lots of the same product, once some standard level of performance has been established. The salt atmosphere test is especially helpful as a screening test for revealing particularly inferior coatings. When used to check the porosity of metallic coatings, the test is more dependable when applied to coatings that are cathodic rather than anodic toward the basic metal. This test can also be used to detect the presence of free iron contaminating the surface of another metal, by inspection of the corrosion products.

2. APPARATUS. Apparatus used in the salt atmosphere test shall include the following:

a. Exposure chamber with racks or fixtures for supporting specimens.

b. Salt-solution reservoir with means for monitoring an adequate level of solution.

c. Means for atomizing the salt solution, including suitable nozzles and compressed air supply.

d. Chamber-heating means and controls.

e. Means for humidifying the air at a temperature above the chamber temperature.

2.1 Chamber. The chamber and all accessories shall be made of material that will not affect the corrosiveness of the salt atmosphere, such as glass, hard rubber, or plastic. All parts of the test setup that come in contact with test specimens shall be of materials that will not cause electrolytic corrosion. The chamber and accessories shall be so constructed and arranged that there is no direct impinging of the spray or dripping of the condensate on the specimens, so that the atmosphere circulates freely about all specimens to the same degree, and so that no liquid which has come in contact with the test specimens returns to the salt-solution reservoir. The chamber shall be properly vented to prevent pressure build up and allow uniform distribution of salt spray. The chamber shall have a suitable means of heating and maintaining the required test temperature.

2.2 Salt solution reservoir. The salt solution reservoir shall be made of material that is non-reactive with the salt solution, e.g., glass, hard rubber, or plastic. The reservoir shall be adequately protected from the surrounding environment and shall have a means to monitor the solution level. The reservoir shall include a means to filter the salt solution in the supply line to the atomizers. When long duration test conditions are specified (e.g. test condition D), the reservoir may be refilled via auxiliary reservoirs so that the test cycle shall not be interrupted.

2.3 Air supply. The compressed air entering the atomizers shall be free from all impurities such as oil and dirt. Means shall be provided to humidify and warm the compressed air as required to meet the operating conditions. The air pressure shall be suitable to produce a finely divided dense fog with the atomizer(s) used. To insure against clogging the atomizers by salt deposition, the air should have a relative humidity of 95 to 98 percent at the point of release from the nozzle. A satisfactory method is to pass the air in very fine bubbles through a tower containing heated water. The temperature of the water should be 95°F (35°C) or higher. The permissible temperature increases with increasing volume of air and with decreasing heat insulation of the chamber and temperature of its surroundings. It should not exceed a value above which an excess of moisture is introduced into the chamber (e.g. 110°F (43.3°C) at an air pressure of 12 pounds psi), or a value that makes it impossible to meet the requirement for operating temperature.

3. SALT SOLUTION. The salt used shall be sodium chloride (NaCl) containing on the dry basis not more than 0.1 percent of sodium iodide, and not more than 0.5 percent of total impurities. Do not use sodium chloride (NaCl) containing anti-caking agents because such agents may act as corrosion inhibitors. Unless otherwise specified, the salt solution concentration shall be 5 ±1 percent. The 5 percent solution shall be prepared by dissolving 5 ±1 parts by weight of salt in 95 parts by weight of distilled or deionized water. Water used in the preparation of solutions shall contain not more than 200 parts per million of total solids. The salt solution shall be kept free from solids by filtration. The solution shall be adjusted to and maintained at a specific gravity in accordance with figure 101-1. The pH shall be maintained between 6.5 and 7.2 when measured at a temperature of 95°F ±5°F (35°C ±3°C). Only dilute cp grade hydrochloric acid, reagent grade hydrochloric acid, or sodium hydroxide shall be used to adjust the pH.

4. PREPARATION OF SPECIMENS. Specimens shall be given a minimum of handling, particularly on the significant surfaces, and shall be prepared for test immediately before exposure. Unless otherwise specified, uncoated metallic or metallic-coated specimens shall be thoroughly cleaned of oil, dirt, and grease as necessary until the surface is free from water break. The cleaning methods shall not include the use of corrosive solvents nor solvents which deposit either corrosive or protective films, nor the use of abrasives other than a paste of pure magnesium oxide. Specimens having an organic coating shall not be solvent cleaned. Those portions of specimens which come in contact with the support and, unless otherwise specified in the case of coated specimens or samples, cut edges and surfaces not required to be coated, shall be protected with a suitable coating of wax or similar substance impervious to moisture.

5. PROCEDURE.

5.1 Maintenance and conditioning of test chamber. The chamber shall be cleaned each time the salt solution in the reservoir has been used up to assure that all materials that could adversely affect the results of subsequent tests are removed. However, no test shall be interrupted for the purpose of chamber cleaning. After the cleaning cycle, upon restarting the chamber, the reservoir shall be filled with salt solution and the chamber shall be stabilized by operating it until the temperature comes to equilibrium, see 5.3. Intermittent operation of the chamber is acceptable, provided the pH and concentration of the salt solution are kept within limits, see 3.

5.2 Location of specimens. Unless otherwise specified, flat specimens and, where practicable, other specimens shall be supported in such a position that the significant surface is approximately 15 degrees from the vertical and parallel to the principal direction of horizontal flow of the fog through the chamber. Other specimens shall be positioned so as to insure most uniform exposure. Whenever practicable, the specimens shall be supported from the bottom or from the side. When specimens are suspended from the top, suspension shall be by means of glass or plastic hooks or wax string; if plastic hooks are used, they shall be fabricated of material that is non-reactive to the salt solution such as lucite. The use of metal hooks is not permitted. Specimens shall be positioned so that they do not contact each other, so that they do not shield each other from the freely settling fog, and so that corrosion products and condensate from one specimen do not fall upon another.

5.3 Chamber operation. A salt fog having a temperature of 95°F minimum (35°C minimum) shall be passed through the chamber for the specified test duration (see 5.4). The exposure zone of the chamber shall be maintained at a temperature of 95°F ±5°F (35°C ±3°C). The conditions maintained in all parts of the exposure zone shall be such that a suitable receptacle placed at any point in the exposure zone will collect from 0.5 to 3.0 milliliters of solution per hour for each 80 square centimeters (0.5-3ml/hr/80cm^2) of horizontal collecting area (10 centimeters diameter). At least two clean fog-collecting receptacles shall be used; one placed at the perimeter of the test specimens nearest to the (any) nozzle, and the other at the perimeter of the test specimens farthest from the nozzle(s). Receptacles shall be fastened in such a manner that they are not shielded by specimens and so that no drops of solution from specimens or other sources will be collected. The 5 percent solution thus collected shall have a sodium chloride (NaCl) content of from 4 to 6 percent (specific gravity in accordance with figure 101-1) when measured at a temperature of 95°F ±5°F (35°C ±3°C). The specific gravity and quantity of the solution collected shall be checked following each salt atmosphere test. Suitable atomization has been obtained in boxes having a volume of less than 12 cubic feet with the following conditions:

a. Nozzle pressure of from 12 to 18 pounds psi.

b. Orifices of from 0.02 to 0.03 inch in diameter.

c. Atomization of approximately 3 quarts of the salt solution per 10 cubic feet of box volume for each 24 hour period of test.

When using large-size boxes having a volume considerably in excess of 12 cubic feet, the above conditions may have to be modified in order to meet the requirements for operating conditions.

5.4 Length of test. The length of the salt atmosphere test shall be that indicated in one of the following test conditions, as specified:

Test condition	Length of test
A	96 hours
B	48 hours
C	24 hours
D	240 hours

Unless otherwise specified, the test shall be run continuously for the time indicated or until definite indication of failure is observed, with no interruption except for adjustment of the apparatus and inspection of the specimen.

6. MEASUREMENTS. Upon completion of the salt exposure, the test specimens shall be immediately washed with free flowing deionized water (not warmer that 100°F (38°C)) for at least 5 minutes to remove salt deposits from their surface after which they shall be dried with air or inert gas. As an option, the test specimens may be subjected to a gentle wash or dip in running water (not warmer than 100°F (38°C)) and a light brushing, using a soft hair brush or plastic bristle brush, after which they shall be dried with air or inert gas. The test specimens shall then be subjected to the inspections specified.

7. SUMMARY. The following details are to be specified in the individual specification:

a. Special mounting and details, if applicable (see 5.2).

b. Test condition letter (see 5.4).

c. Measurements after exposure (see 6).

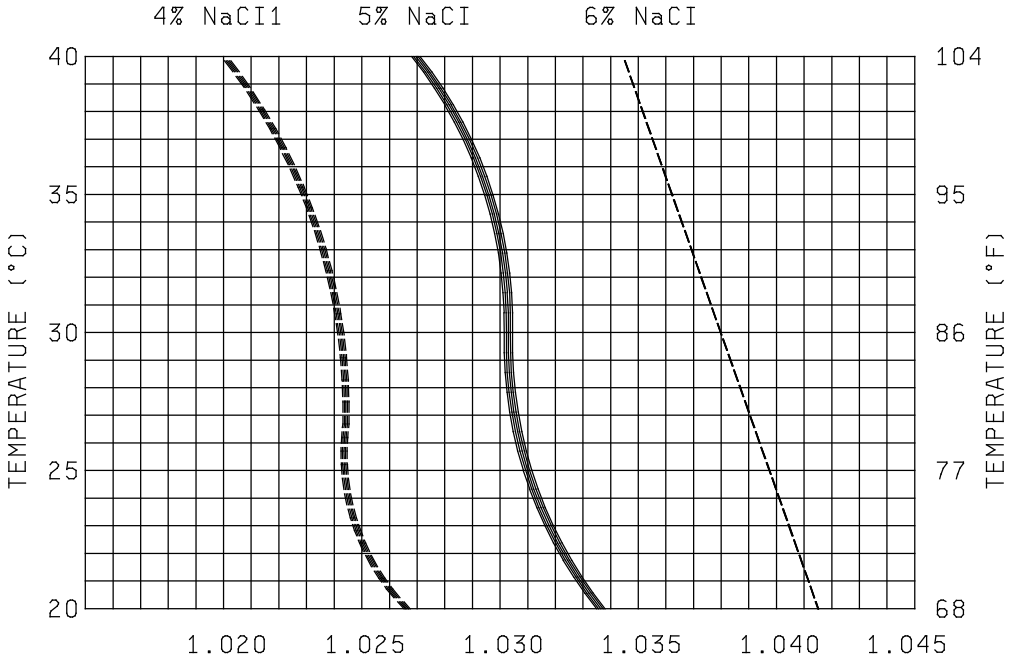

FIGURE 101-1. Variations of specific gravity of salt (NaCl) solution with temperature.

METHOD 102A

TEMPERATURE CYCLING
(CANCELED)

When Method 102 Is specified	Use Method 107
Test condition	Test condition
A, B and D	A
C	B

METHOD 103B

HUMIDITY (STEADY STATE)

1. PURPOSE. This test is performed to evaluate the properties of materials used in components as they are influenced by the absorption and diffusion of moisture and moisture vapor. This is an accelerated environmental test, accomplished by the continuous exposure of the specimen to high relative humidity at an elevated temperature. These conditions impose a vapor pressure on the material under test which constitutes the force behind the moisture igration and penetration. Hygroscopic materials are sensitive to moisture, and deteriorate rapidly under humid conditions. Absorption of moisture by many materials results in swelling, which destroys their functional utility, and causes loss of physical strength and changes in other important mechanical properties. Insulating materials that absorb moisture may suffer degradation of their electrical properties. This method, while not necessarily intended as a simulated tropical test, is of use in determining moisture absorption of insulating materials.

2. PROCEDURE.

2.1 Conditioning. The specimens shall be conditioned in a dry oven at a temperature of 40° ±5°C for a period of 24 hours. At the end of this period, measurements shall be made as specified.

2.2 Chamber. The chamber and accessories shall be constructed and arranged in such a manner as to avoid condensate dripping on the specimens under test, and such that the specimens shall be exposed to circulating air.

2.3 Exposure. The specimens shall be placed in a chamber and subjected to a relative humidity of 90 to 95 percent and a temperature of 40° ±2°C for the period of time indicated in one of the following test conditions, as specified:

Test condition	Length of test
A	240 hours
B	96 hours
C	504 hours
D	1,344 hours

When specified, a direct-current potential of 100 volts or as specified shall be applied to the specimens during the exposure period. The length of time for the application of voltage and the points of application shall be as specified.

3. FINAL MEASUREMENTS

3.1 At high humidity. Upon completion of the exposure period, and while the specimens are still in the chamber, the specified measurements shall be performed. These measurements may be compared to the initial measurements (see 2.1), when applicable.

3.2 After drying period. Upon completion of the exposure period or following measurements at high humidity if applicable, the specimens shall be conditioned at room ambient conditions for not less than 1 hour, nor more than 2 hours unless otherwise specified, after which the specified measurements shall be performed at room ambient conditions.

4. SUMMARY. The following details are to be specified in the individual specification:

a. Measurements after conditioning (see 2.1).

b. Test condition letter (see 2.3).

c. The length of time and points of application of polarizing voltage, if applicable (see 2.3).

d. Final measurements:

(1) At high humidity, if applicable (see 3.1).

(2) After drying period (see 3.2).

METHOD 104A

IMMERSION

1. PURPOSE. This test is performed to determine the effectiveness of the seal of component parts. The immersion of the part under evaluation into liquid at widely different temperatures subjects it to thermal and mechanical stresses which will readily detect a defective terminal assembly, or a partially closed seam or molded enclosure. Defects of these types can result from faulty construction or from mechanical damage such as might be produced during physical or environmental tests. The immersion test is generally performed immediately following such tests because it will tend to aggravate any incipient defects in seals, seams, and bushings which might otherwise escape notice. This test is essentially a laboratory test condition, and the procedure is intended only as a measurement of the effectiveness of the seal following this test. The choice of fresh or salt water as a test liquid is dependent on the nature of the component part under test. When electrical measurements are made after immersion cycling to obtain evidence of leakage through seals, the use of a salt solution instead of fresh water will facilitate detection of moisture penetration. This test provides a simple and ready means of detection of the migration of liquids. Effects noted can include lowered insulation resistance, corrosion of internal parts, and appearance of salt crystals. The test described is not intended as a thermal shock or corrosion test, although it may incidentally reveal inadequacies in these respects.

2. PROCEDURE. This test consists of successive cycles of immersions, each cycle consisting of immersion in a hot bath of fresh (tap) water at a temperature of 65° +5°, -0 °C (149° +9°, -0 °F) followed by immersion in a cold bath. The number of cycles, duration of each immersion, and the nature and temperature of the cold bath shall be as indicated in the applicable test condition listed in table 104-1, as specified.

TABLE 104-1 Immersion test conditions.

Test condition	Number of cycles	Duration of each immersion	Immersion bath (cold)	Temperature of cold bath
		Minutes		°C
A	2	15	Fresh (tap) water	25 (+10,-5)
B	2	15	Saturated solution of sodium chloride and water	25 (+10,-5)
C	5	60	Saturated solution of sodium chloride and water	0 ±3

The transfer of specimens from one bath to another shall be accomplished as rapidly as practicable. After completion of the final cycle, specimens shall be thoroughly and quickly washed and all surfaces wiped or air-blasted clean and dry.

3. MEASUREMENTS. Unless otherwise specified, measurements shall be made at least 4 hours, but not more than 24 hours, after completion of the final cycle. Measurements shall be made as specified.

4. SUMMARY. The following details are to be specified in the individual specification:

a. Test condition letter (see 2).

b. Time after final cycle allowed for measurements, if other than that specified (see 3).

c. Measurements after final cycle (see 3).

METHOD 105C

BAROMETRIC PRESSURE (REDUCED)

1. PURPOSE. The barometric pressure test is performed under conditions simulating the low atmospheric pressure encountered in the nonpressurized portions of aircraft and other vehicles in high altitude flight. This test is intended primarily to determine the ability of component parts and materials to avoid dielectric-withstanding-voltage failures due to the lowered insulating strength of air and other insulating materials at reduced pressures. Even when low pressures do not produce complete electrical breakdown, corona and its undesirable effects, including losses and ionization, are intensified. Low barometric pressures also serve to decrease the life of electrical contacts, since intensity of arcing is increased under these circumstances. For this reason, endurance tests of electro-mechanical component parts are sometimes conducted at reduced pressures. Low-pressure tests are also performed to determine the ability of seals in component parts to withstand rupture due to the considerable pressure differentials which may be developed under these conditions. The simulated high altitude conditions of this test can also be employed to investigate the influence on component parts operating characteristics, of other effects of reduced pressure, including changes in dielectric constants of materials; reduced mechanical loading on vibrating elements, such as crystals; and decreased ability of thinner air to transfer heat away from heat-producing components.

2. APPARATUS. The apparatus used for the barometric pressure test shall consist of a vacuum pump and a suitable sealed chamber having means for visual observation of the specimen under test when necessary. A suitable pressure indicator shall be used to measure the simulated altitude in feet in the sealed chamber.

3. PROCEDURE. The specimens shall be mounted in the test chamber as specified and the pressure reduced to the value indicated in one of the following test conditions, as specified. Previous references to this method do not specify a test condition; in such cases, test condition B shall be used. While the specimens are maintained at the specified pressure, and after sufficient time has been allowed for all entrapped air in the chamber to escape, the specimens shall be subjected to the specified tests.

Test condition	Pressure - Maximum		Altitude	
	Inches of mercury	Millimeters of mercury	Feet	Meters
A	8.88	226.00	30,000	9,144
B	3.44	87.00	50,000	15,240
C	1.31	33.00	70,000	21,336
D	0.315	8.00	100,000	30,480
E	0.043	1.09	150,000	45,720
F	17.3	439.00	15,000	4,572
G	9.436×10^{-8}	2.40×10^{-6}	656,000	200,000

4. SUMMARY. The following details are to be specified in the individual specification:

a. Method of mounting (see 3).

b. Test condition letter (see 3).

c. Tests during subjection to reduced pressure (see 3).

d. Tests after subjection to reduced pressure, if applicable.

e. Exposure time prior to measurements, if applicable.

METHOD 106G

MOISTURE RESISTANCE

1. PURPOSE. The moisture resistance test is performed for the purpose of evaluating, in an accelerated manner, the resistance of component parts and constituent materials to the deteriorative effects of the high-humidity and heat conditions typical of tropical environments. Most tropical degradation results directly or indirectly from absorption of moisture vapor and films by vulnerable insulating materials, and from surface wetting of metals and insulation. These phenomena produce many types of deterioration, including corrosion of metals, physical distortion and decomposition of organic materials, leaching out and spending of constituents of materials; and detrimental changes in electrical properties. This test differs from the steady-state humidity test (method 103 of this standard) and derives its added effectiveness in its employment of temperature cycling, which provides alternate periods of condensation and drying essential to the development of the corrosion processes and, in addition, produces a "breathing" action of moisture into partially sealed containers. Increased effectiveness is also obtained by use of a higher temperature, which intensifies the effects of humidity. The test includes low temperature and vibration subcycles (when applicable, see 3.4.2) that act as accelerants to reveal otherwise indiscernible evidence of deterioration since stresses caused by freezing moisture and accentuated by vibration tend to widen cracks and fissures. As a result, the deterioration can be detected by the measurement of electrical characteristics (including such tests as dielectric withstanding voltage and insulation resistance) or by performance of a test for sealing. Provision is made for the application of a polarizing voltage across insulation to investigate the possibility of electrolysis, which can promote eventual dielectric breakdown. This test also provides for electrical loading of certain components, if desired, in order to determine the resistance of current-carrying components, especially fine wires and contacts, to electro-chemical corrosion. Results obtained with this test are reproducible and have been confirmed by investigations of field failures. This test has proven reliable for indicating those parts which are unsuited for tropical field use.

2. APPARATUS.

2.1 Chamber. A test chamber shall be used which can meet the temperature and humidity cycling specified on figure 106-1. The material used to fabricate the platforms and standoffs, which support the specimens, shall be non-reactive in high humidity. Wood or plywood shall not be used because they are resiniferous. Materials shall not be used if they contain formaldehyde or phenol in their composition. Provisions shall be made to prevent condensate from the chamber ceiling dripping onto the test specimens.

2.1.1 Opening of the chamber door. During the periods when the humidity is ascending or descending, the chamber door should not be opened. If the chamber door must be opened, it should be opened during the 16th hour through the 24th hour of an individual cycle. While the chamber is at 25°C (77°F), and the relative humidity tolerance must be maintained, the chamber door should be opened only for a short period of time.

2.1.2 Water. Steam, or distilled and demineralized, or deionized water, having a pH value between 6.0 and 7.2 at 23°C (73.4°F) shall be used to obtain the specified humidity. No rust or corrosive contaminants shall be imposed on the test specimens by the test facility.

3. PROCEDURE.

3.1 Mounting. Specimens shall be mounted by their normal mounting means, in their normal mounting position, but shall be positioned so that they do not contact each other, and so that each specimen receives essentially the same degree of humidity.

3.2 Initial measurements. Prior to step 1 of the first cycle, the specified initial measurements shall be made at room ambient conditions, or as specified.

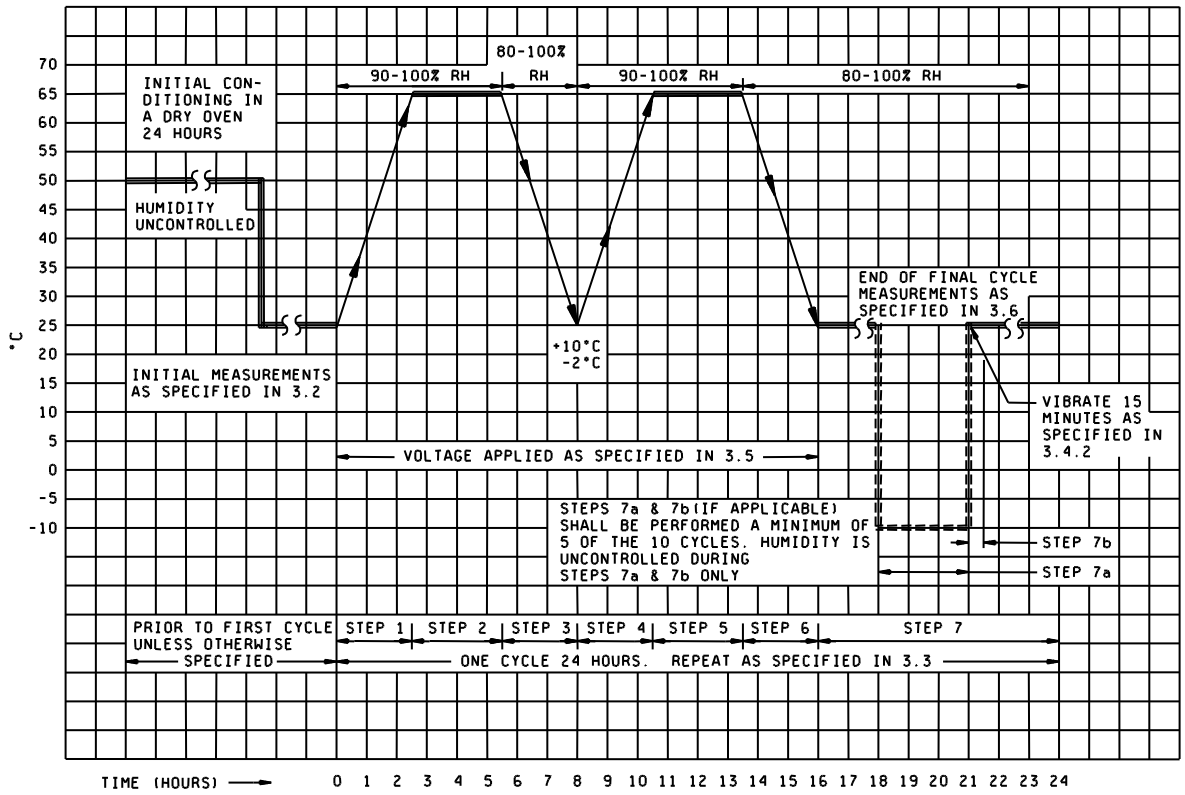

NOTES:

1. Allowance of 100 percent RH is intended to avoid problems in reading values close to 100 percent RH, but actual chamber operation shall be such so as to avoid condensation.
2. Unless otherwise specified, the steady state temperature tolerance is ±2°C at all points within the immediate vicinity of the specimens and the chamber surfaces.
3. Rate of change of temperature is unspecified; however, specimens shall not be subjected to radiant heat from chamber-conditioning processes.
4. Circulation of air in the chamber shall be at a minimum cubic rate per minute equivalent to 5 times the volume of the chamber.

FIGURE 106-1. Graphical representation of moisture-resistance test.

3.3 Number of cycles. Specimens shall be subjected to 10 continuous cycles, each as shown on figure 106-1. In the event of no more than one unintentional test interruption (power interruption or equipment failure) prior to the completion of the specified number of cycles (except for the last cycle), the cycle shall be repeated and the test may continue. Unintentional interruptions occurring during the last cycle require a repeat of the cycle plus an additional uninterrupted cycle. Any intentional interruption, or any unintentional interruption of greater than 24 hours requires a complete retest.

3.4 Subcycle of step 7. During at least 5 of the 10 cycles, a low temperature subcycle and, if applicable, a vibration subcycle shall be performed.

3.4.1 Step 7a. At least 1 hour but not more than 4 hours after step 7 begins, the specimens shall be either removed from the humidity chamber, or the temperature of the chamber shall be reduced. Specimens shall then be conditioned at -10°C ±2°C (14°F ±3.6°F) with humidity not controlled, for 3 hours minimum as indicated on figure 106-1. When a separate cold chamber is not used, care should be taken to assure that the specimens are held at -10°C ±2°C (14°F ±3.6°F) for the full 3 hour period. (If step 7b is not applicable, the specimens shall be returned to 25°C (77°F) at 80 percent relative humidity minimum and kept there until the next cycle begins.)

3.4.2 Step 7b (when applicable). Within 15 minutes after completion of step 7a and with humidity not controlled and temperature at room ambient, specimens shall be vibrated for 15 minutes, using a simple harmonic motion having an amplitude of 0.03 inch (0.76 mm), (0.06 inch (1.52 mm) maximum total excursion), the frequency being varied uniformly between the approximate limits of 10 and 55 hertz (Hz). The entire frequency range, from 10 to 55 Hz and return to 10 Hz, shall be traversed in approximately 1 minute. After step 7b, the specimens shall be returned to 25°C (77°F) at 80 percent relative humidity minimum and kept there until the next cycle begins.

NOTE: Step 7b is not applicable to parts that include test schedules with vibration requirements (such as method 201 or method 204 of this standard). These parts must routinely be subjected to, and pass, these requirements.

NOTE: Allowance of 100 percent RH is intended to avoid problems in reading values close to 100 percent, but actual chamber operation shall be such so as to avoid condensation.

3.5 Polarization and load. When applicable, polarization voltage shall be 100 volts dc, or as specified. The loading voltage shall be as specified.

3.6 Final measurements.

3.6.1 At high humidity. Upon completion of step 6 of the final cycle (or step 7 if the subcycle of 3.4 is performed during the tenth cycle), when measurements at high humidity are specified, the specimens shall be maintained at a temperature of 25°C ±2°C (77°F ±3.6°F), and a RH of 80 percent minimum for a period of 1½ to 3½ hours, after which the specified measurements shall be made. Due to the difficulty in making measurements under high humidity conditions, the individual specification shall specify the particular precautions to be followed in making measurements under such conditions.

(NOTE: Allowance of 100 percent RH is intended to avoid problems in reading values close to 100 percent, but actual chamber operation shall be such so as to avoid condensation.)

3.6.2 After high humidity. Upon removal from humidity chamber, final measurements shall be made within a period of 1 to 2 hours after the final cycle. During final measurements, specimens shall not be subjected to any means of artificial drying.

3.6.3 After drying period. Following step 6 of the final cycle (or step 7 if the subcycle of 3.4 is performed during the tenth cycle), or following measurements at high humidity, if applicable, specimens shall be conditioned for 24 hours at the ambient conditions specified for the initial measurements (see 3.2) after which the specified measurements shall be made. Measurements may be made during the 24 hour conditioning period; however, any failures which occur shall be considered as failures and shall not be retested later for the purpose of obtaining an acceptable result.

4. SUMMARY: The following details are to be specified in the individual specification:

a. Initial measurements and conditions, if other than room ambient (see 3.2).

b. When applicable, the polarization voltage if other than 100 volts (see 3.5).

c. Loading voltage (see 3.5).

d. Final measurements and measurement conditions (see 3.6).

METHOD 107G

THERMAL SHOCK

1. PURPOSE. This test is conducted for the purpose of determining the resistance of a part to exposures at extremes of high and low temperatures, and to the shock of alternate exposures to these extremes, such as would be experienced when equipment or parts are transferred to and from heated shelters in arctic areas. These conditions may also be encountered in equipment operated noncontinuously in low-temperature areas or during transportation. Although it is preferred that the specimen reach thermal stability during the exposure specified, in the interest of saving time, parts may be tested at the minimum exposure durations specified, which will not insure thermal stability but only an approach thereto. Permanent changes in operating characteristics and physical damage produced during thermal shock result principally from variations in dimensions and other physical properties. Effects of thermal shock include cracking and delamination of finishes, cracking and crazing of embedding and encapsulating compounds, opening of thermal seals and case seams, leakage of filling materials, rupturing, or cracking of hermetic seals and vacuum glass to metal seals, and changes in electrical characteristics due to mechanical displacement or rupture of conductors or of insulating materials.

2. APPARATUS. Suitable temperature controlled systems shall be used to meet the temperature requirements and test conditions specified in table 107-I or table 107-III. The liquid method is more severe and may damage some components that might not be degraded by the air method. It is not intended for use on nonhermetically sealed components.

2.1 Environmental chambers. A system of sufficient thermal capacity shall be used to change ambient chamber conditions to meet test requirements and to reach specified temperature conditions of steps 1 and 3 of table 107-I. The supply air temperature of the chambers shall reach the specified temperature within a recovery time of 5 minutes after the specimens have been transferred to the appropriate chamber.

2.2 Liquid baths. Suitable temperature controlled baths containing liquids (see table 107-IV) shall be chosen to maintain the specified test conditions (see table 107-III) within the indicated tolerances. A liquid media shall not be used without prior approval of the qualifying activity.

3. PROCEDURE.

3.1 Environmental chambers. Specimens shall be placed so that there is substantially no obstruction to the flow of air across and around the specimen. When special mounting is required, it shall be specified. The specimen shall be subjected to the specified test condition of table 107-I. The first five cycles shall be run continuously. After five cycles, the test may be interrupted after the completion of any full cycle, and the specimens allowed to return to room ambient temperature before testing is resumed. One cycle consists of steps 1 through 4 of the applicable test condition. Specimens shall not be subjected to forced circulating air while being transferred from one chamber to another. Whether single or multiple chambers are used, the effective total transfer time from the specified low temperature to the specified high temperature, or the reverse, shall not exceed 5 minutes. Direct heat conduction to the specimen should be minimized. In the case of multiple chambers, the transfer time shall be defined as the time between withdrawal from the low temperature chamber and introduction into the high temperature chamber or the reverse.

NOTE: In single compartment chambers, in which the temperature extremes of steps 1 and 3 are achieved without physical movement of the specimens, steps 2 and 4 are not applicable.

3.2 Liquid baths. Specimens shall be immersed in a suitable liquid that shall be approved by the qualifying activity (see table 107-IV), at the temperature in step 1 of the specified test condition (see table 107-III) for the time specified in table 107-V. Immediately upon the conclusion of step 1, the device shall be transferred to a suitable liquid at the temperature specified in step 2 of the specified test condition. The device shall remain at the high temperature for the time specified in table 107-V. These two steps, step 1 and 2, constitute one cycle of the applicable test condition. Repeat the required number of cycles without interruption as specified in table 107-III. Transfer time from low to high temperature and from high to low temperature shall be less than 10 seconds.

TABLE 107-I. Thermal shock test conditions (air).

Step	Test condition	Number of cycles		Test condition	Number of cycles		Test condition	Number of cycles
	A	5		B	5		C	5
	A-1	25		B-1	25		C-1	25
	A-2	50		B-2	50		C-2	50
	A-3	100		B-3	100		C-3	100
	Temperature	Time		Temperature	Time		Temperature	Time
	°C			°C			°C	
1	-55 +0, -3	See table 107-II		-65 +0, -5	See table 107-II		-65 +0, -5	See table 107-II
2	25 +10, -5	5 minutes maximum		25 +10, -5	5 minutes maximum		25 +10, -5	5 minutes maximum
3	85 +3, -0	See table 107-II		125 +3, -0	See table 107-II		200 +5, -0	See table 107-II
4	25 +10, -5	5 minutes maximum		25 +10, -5	5 minutes maximum		25 +10, -5	5 minutes maximum

Step	Test condition	Number of cycles		Test condition	Number of cycles		Test condition	Number of cycles
	D	5		E	5		F	5
	D-1	25		E-1	25		F-1	25
	D-2	50		E-2	50		F-2	50
	D-3	100		E-3	100		F-3	100
	Temperature	Time		Temperature	Time		Temperature	Time
	°C			°C			°C	
1	-65 +0, -5	See table 107-II		-65 +0, -5	See table 107-II		-65 +0, -5	See table 107-II
2	25 +10, -5	5 minutes maximum		25 +10, -5	5 minutes maximum		25 +10, -5	5 minutes maximum
3	350 +5, -0	See table 107-II		500 +5, -0	See table 107-II		150 +3, -0	See table 107-II
4	25 +10, -5	5 minutes maximum		25 +10, -5	5 minutes maximum		25 +10, -5	5 minutes maximum

TABLE 107-II. Exposure time in air at temperature extremes.

Weight of specimen	Minimum time (for steps 1 and 3)
	Hours
1 ounce (28 grams and below)	1/4 (or as specified)
Above 1 ounce (28 grams) to .3 pound (136 grams), inclusive	½
Above .3 pounds (136 grams) to 3 pounds (1.36 kilograms), inclusive	1
Above 3 pounds (1.36 kilograms) to 30 pounds (13.6 kilograms), inclusive	2
Above 30 pounds (13.6 kilograms) to 300 pounds (136 kilograms), inclusive	4
Above 300 pounds (136 kilograms)	8

TABLE 107-III. Thermal shock conditions (liquid).

Step	Test condition	Number of cycles		Test condition	Number of cycles		Test condition	Number of cycles		Test condition	Number of cycles
	AA	5		BB	5		CC	5		DD	5
	AA-1	15		BB-1	15		CC-1	15		DD-1	15
	AA-2	25		BB-2	25		CC-2	25		DD-2	25
	Temperature	Time		Temperature	Time		Temperature	Time		Temperature	Time
	°C			°C			°C			°C	
1	-0 +2, -10	See table 107-V		-65 +0, -10	See table 107-V		-65 +0, -10	See table 107-V		-65 +0, -10	See table 107-V
2	100 +10, -2	See table 107-V		125 +10, -0	See table 107-V		150 +10, -0	See table 107-V		200 +10, -0	See table 107-V

TABLE 107-IV. Suggested thermal fluids. 1/ 2/

Test condition	AA, AA-1, AA-2 fluids	BB, BB-1, BB-2 Fluids	CC, CC-1, CC-2 fluids	DD, DD-1, DD-2 fluids
Step 1	FC40 4/ or Water 3/ D02, D02-TS, D/80 } 6/	FC77 4/ D02, D02-TS, D/80 } 6/	FC77 4/ D02, D02-TS, D/80 } 6/	FC77 4/ D02, D02-TS, D/80 } 6/
Step 2	FC40 4/ Water 3/ D02, D02-TS, D03 } 6/	FC70, FC40 } 4/ UCON-WS 5/ D02, D02-TS, D03 } 6/	FC70, FC40 } 4/ UCON-WS 5/ D02, D02-TS, D03 } 6/	FC70 4/ UCON-WS } 5/ D05, LS/230, LS/215 } 6/

1/ See 2.2.

2/ Ethylene glycol shall not be used as a thermal shock test fluid.

3/ Tap water is indicated as an acceptable fluid for this temperature range. Its suitability chemically shall be established prior to use. A mixture of water and alcohol may be used to prevent freezing at the low temperature extreme. The water shall not be allowed to boil at the upper temperature extreme.

4/ FC77, FC70, FC40 are the registered trademark of 3M.

5/ UCON-WS process fluid is the registered trademark of Union Carbide Corporation.

6/ D02, D02-TS, D03, D05, D/80, LS/215 and LS/230 are the registered trademark of Ausimont (Division of Montedison).

TABLE 107-V. Exposure time in liquid at temperature extremes.

Weight of specimen	Minimum time (for steps 1 and 2)
	Minutes
.05 ounce (1.4 grams) and below	½
Above .05 ounce (1.4 grams) to .5 ounce (14 grams)	2
Above .5 ounce (14 grams) to 5 ounces (140 grams)	5

4. MEASUREMENTS. Specified measurements shall be made prior to the first cycle and upon completion of the final cycle, except that failures shall be based on measurements made after the specimen has stabilized at room temperature following the final cycle.

5. SUMMARY. The following details are to be specified in the individual specification:

a. Recovery time if other than 5 minutes (see 2.1).

b. Special mounting, if applicable (see 3).

c. Type test (air or liquid) and test condition (see 3).

d. Transfer time if other than specified in 3.1 or 3.2.

e. Measurements before and after cycling (see 4).

METHOD 108A

LIFE
(AT ELEVATED AMBIENT TEMPERATURE)

1. PURPOSE. This test is conducted for the purpose of determining the effects on electrical and mechanical characteristics of a part, resulting from exposure of the part to an elevated ambient temperature for a specified length of time, while the part is performing its operational function. This test method is not intended for testing parts whose life is expressed in the number of operations. Evidence of deterioration resulting from this test can at times be determined by visual examination; however, the effects may be more readily ascertained by measurements or tests prior to, during, or after exposure. Surge current, total resistance, dielectric strength, insulation resistance, and capacitance are types of measurements that would show the deleterious effects due to exposure to elevated ambient temperatures.

2. APPARATUS. A suitable chamber shall be used which will maintain the temperature at the required test temperature and tolerance (see 3.2) to which the parts will be subjected. Temperature measurements shall be made within a specified number of unobstructed inches from any one part or group of like parts under test. In addition, the temperature measurement shall be made at a position where the effects of heat generated by the parts have the least effect on the recorded temperature. Chamber construction shall minimize the influence of radiant heat on the parts being tested. Chambers that utilize circulating liquid as a heat exchanger, free-convection (gravity type) chambers, and circulating air chambers may be used providing that the other requirements of this test method are met. When specified, this test shall be made in still air. (Still air is defined as surrounding air with no circulation other than that created by the heat of the part being operated.) The employment of baffling devices and the coating of their surfaces with a heat-absorbing finish are permitted. When a test is conducted on parts that do not have the still-air requirement, there shall be no direct impingement of the forced-air supply upon the parts.

3. PROCEDURE.

3.1 Mounting. Specimens shall be mounted as specified by their normal mounting means. When groups of specimens are to be subjected to test simultaneously, the mounting distance between specimens shall be as specified for the individual groups. When the distance is not specified, the mounting distance shall be sufficient to minimize the temperature of one specimen affecting the temperature of another. Specimens fabricated of different materials, which may have a detrimental effect on each other and alter the results of this test, shall not be tested simultaneously.

3.2 Test temperature. Specimens shall be subjected to one of the following test temperatures with accompanying tolerances, as specified:

Temperature and tolerance 1/	
°C	°F
70 ±2	158 ±3.6
85 ±2	185 ±3.6
100 ±2	212 ±3.6
125 ±3	257 ±5.4
150 ±3	302 ±5.4
200 ±5	392 ±9
350 (± as specified)	662 (± as specified)
500 (± as specified)	932 (± as specified)

1/ For tests on resistors only, in a still-air environment, the maximum temperature tolerance shall be ±5°C (±9°F).

3.3 Operating conditions. The test potential, duty cycle, load, and other operating conditions, as applicable, applied to the specimen during exposure shall be as specified.

3.4 Length of test. Specimens shall be subjected to one of the following test conditions, as specified:

Test condition	Length of test, hours
A	96
B	250
C	500
D	1,000
F	2,000
G	3,000
H	5,000
I	10,000
J	30,000
K	50,000

NOTE: Test condition E (1,500 hour test) has been deleted from this test method.

4. MEASUREMENTS. Specified measurements shall be made prior to, during, or after exposure, as specified. If applicable, frequency of measurements, and portion of the duty cycle in which measurements are to be made, while the specimen is subjected to test, shall be as specified.

5. SUMMARY. The following details are to be specified in the individual specification:

a. Distance of temperature measurements from specimens, in inches (see 2).

b. Still-air requirement, when applicable (see 2).

c. Method of mounting and distance between specimens, if required (see 3.1).

d. Test temperature and tolerance (see 3.2).

e. Operating conditions (see 3.3).

f. Test condition letter (see 3.4).

g. Measurements (see 4).

(1) Prior to, during, or after exposure (see 4).

(2) Frequency of measurements, and portion of duty cycle during test, if applicable (see 4).

METHOD 109C

EXPLOSION

1. PURPOSE. The purpose of this method is to determine if a part, while operating, will ignite an ambient explosive atmosphere. This environment is prevalent in aircraft; therefore, the test is conducted at ground level and various reduced barometric pressures. The parts subjected to this type of test are not enclosed in casings designed to prevent flame or explosion propagation.

2. APPARATUS.

2.1 Test facility. The test apparatus consists of a test chamber or cabinet together with associated equipment, safety provisions, and auxiliary instrumentation necessary to establish, maintain, and monitor the specified test conditions. The chamber should be equipped with a system for mixing and circulation of the explosive air-fuel mixture, a means to ignite the air-fuel mixture such as a spark-gap device, as well as a means to collect and determine the explosiveness of a sample of the mixture such as a spark gap or glow plug ignition source with sufficient energy to ignite a 3.82 percent hexane mixture. An alternative method of determining the explosive characteristics of the vapor is use of a calibrated explosive gas meter that verifies the degree of explosiveness and the concentration of the air-fuel mixture. The chamber or cabinet should include provisions for the electrical and mechanical operation of the specimen under test.

2.1.1 Test facility performance requirements.

2.1.1.1 Chamber design pressure. The test chamber shall be capable of withstanding any explosion pressure up to and including 300 pounds per square inch (2 megapascals).

2.1.1.2 Pressure altitude. The test chamber shall be capable of maintaining any desired pressure altitude from sea level to 60,000 feet (18,250 meters) $\pm$ 2 percent.

2.1.1.3 Chamber air temperature. The air temperature within the test chamber shall be uniform and shall be controllable between 20°C $\pm$ 3°C and 240°C $\pm$ 3°C.

2.2 Fuel. Unless otherwise specified, the fuel for explosive atmosphere testing shall be the single-component hydrocarbon n-hexane, either reagent grade or 95% n-hexane with 5% other hexane isomers. This fuel is used since its ignition properties for flammable atmosphere testing are equal to or more sensitive than the similar properties of both 100/130 octane aviation gasoline, JP-4, and JP-8 jet engine fuel. Optimum mixtures of n-hexane and air will ignite from hot-spot temperatures as low as 223°C (433°F) while optimum JP-4 jet engine fuel-air mixtures require a minimum temperature of 230°C (445°F) for auto-ignition, and 100/130 octane aviation gasoline and air requires 441°C (825°F) for hot-spot ignition. Minimum spark energy inputs for ignition of optimum fuel vapor and air mixtures are essentially the same for n-hexane and for 100/130 octane aviation gasoline. Much higher minimum spark energy input is required to ignite JP-4 or JP-8 jet engine fuel and air mixtures. Use of fuels other than hexane is not recommended. CAUTION: If the individual specification allows the use of an alternate fuel, the specification must also provide all the specific details associated with the alternate fuel, such as safety precautions and fuel-air mixture equation.

2.3 Fuel vapor mixture. Use a homogeneous fuel-air mixture in the correct fuel-air ratios for the explosive atmosphere test. Fuel weight calculated to total 3.8 percent by volume of the test atmosphere represents 1.8 stoichiometric equivalents of n-hexane in air, giving a mixture needing only minimum energy for ignition. This yields an air/vapor ratio (AVR) of 8.33 by weight.

a. Required information to determine fuel weight:

(1) Chamber air temperature during the test

(2) Fuel temperature

(3) Specific gravity of n-hexane (see figure 109-1)

(4) Test altitude: (e.g. 20,000 feet (6100 meters)). Atmospheric pressure in pascals: 46.6 kPa (6.76 psia)

(5) Net volume of the test chamber: free volume less test item displacement expressed in liters or cubic feet.

b. Calculation of the volume of liquid n-hexane fuel for each test altitude:

(1) In metric units:

$$\text{Volume of 95 percent n-hexane (ml)} = (4.27\text{x}10^{-4})\left[\frac{\text{(net chamber vol (liters) x (chamber pressure (pascals)}}{\text{(chamber temp (K) x (specific gravity of n-hexane)}}\right]$$

(2) In English units:

$$\text{Volume of 95 percent n-hexane (ml)} = (150.41)\left[\frac{\text{(net chamber vol (ft}^3\text{)) x (chamber pressure (psia)}}{\text{(chamber temp (R) x (specific gravity of n-hexane)}}\right]$$

2.3.1 Effect of humidity on flammable atmosphere. Humidity is always present in an explosive atmosphere test. The effect of humidity upon the fuel-air composition need not be considered in the test if the ambient air dewpoint temperature is 10°C (50°F) or less because this concentration of water vapor only increases the n-hexane fuel concentration from 3.82 percent to 3.85 percent of the test atmosphere. If the atmospheric pressure is cycled from an equivalent of 5000 feet (1525 meters) above the test level to 5000 feet below (a 34 percent change in pressure), the volume of n-hexane will decrease from 4.61 percent to 3.08 percent. This decrease will compensate for the fuel enrichment effect that results from water vapor dilution of the test air supply.

2.4 Altitude simulation. The energy required to ignite a fuel-air mixture increases as pressure decreases. Ignition energy does not drop significantly for test altitudes below sea level. This test is not appropriate for test altitudes above approximately 52,000 feet (≈16,000 meters) where the lack of oxygen inhibits ignition.

3. PROCEDURE.

3.1 Test preparation.

3.1.1 Controls. Before each test, verify the critical parameters. Ensure spark devices function properly and the fuel atomizing system is free from deposits that could inhibit its functioning. Adjust the empty test chamber to the highest test altitude, shut off the vacuum system and measure the rate of any air leakage. Verify that any leakage will not prevent the test from being performed as required; i.e., introduce the test fuel and wait three minutes for full vaporization, yet still be at least 3300 feet (≈1000m) above the test altitude.

3.1.1.2 Mounting. The specimen to be tested shall be mounted in the test chamber in such a manner that normal electrical operation is possible and so that the mechanical controls may be operated through the pressure seals from the exterior of the chamber. All external covers of the test specimen shall be removed or opened to insure adequate circulation of the explosive mixture. The test specimen shall then be operated to determine that it is functioning properly and to observe the location of any sparking or high temperature spots that may constitute potential explosion hazards.

3.1.2 Loading. Applicable mechanical and electrical loads applied to the specimen shall be as specified in the individual specification. Proper precaution shall be taken to duplicate the normal load in respect to torque, voltage, current, inductive reactance, etc. In all instances it shall be considered preferable to operate the specimen as it normally functions during service use.

3.2 Test execution. The following provides the procedural steps for execution of the explosive atmosphere test;

a. With the test item installed, the test chamber shall be sealed and the test item and chamber inner walls stabilized to 71°C ±3°C (160°F ±5°F), or to a lower temperature as specified, if the specimen is designed to operate at a lower temperature.

b. Adjust the chamber air pressure to simulate the desired test altitude (see 3.3) plus an additional 10,000 feet to allow for introducing, vaporizing, and mixing the fuel with the air as described in 2.3.

c. Slowly introduce the required volume of n-hexane into the test chamber.

d. Circulate the test atmosphere and continue to reduce the simulated chamber altitude for at least three minutes to allow for complete vaporization of fuel and the development of a homogeneous mixture.

e. At a pressure equivalent to 5,000 feet (1525 meters) above the test altitude, verify the potential explosiveness of the fuel-air vapor by attempting to ignite a sample of the mixture taken from the test chamber by using a spark-gap device or glow plug ignition source with sufficient energy to ignite a 3.82 percent hexane mixture. If ignition does not occur, purge the chamber of the fuel vapor and repeat steps a through e. (An alternative method of determining the explosive characteristics of the vapor is by using a calibrated explosive gas meter that verifies the degree of explosiveness and the concentration of the fuel-air mixture.)

f. Operate the test specimen and continue operation through step g. Make and break electrical contacts as frequently and reasonably possible.

g. If no explosion occurs as a result of operation of the test specimen, slowly reduce the simulated chamber altitude to 5,000 feet (1525 meters) below the test altitude (at a rate no faster than 330 feet (100 meters) per minute by bleeding air into the chamber). Perform one last operational check and switch off power to the test specimen.

h. If no explosion has occurred as the result of operation of the test specimen by the time the simulated altitude has reached 5,000 feet (1525 meters) below the test altitude, verify the potential explosiveness of the air-vapor mixture as in step e. If ignition does not occur with the sample, purge the chamber of the fuel vapor, and repeat the test from step a.

i. Repeat steps b through h for the required test altitudes (see 3.3).

3.3 Test altitudes. Unless otherwise specified, the test shall be accomplished at simulated test altitudes of local ground level to 5,000 feet, 20,000 feet, and 40,000 feet. However, if an explosion occurs at an altitude of less than 40,000 feet, further testing shall be discontinued.

4. SUMMARY. The following details are to be specified in the individual specification.

a. Fuel, if other than that specified and all specific details associated with the fuel (see 2.2).

b. Mechanical and electrical load (see 3.1.2).

c. Chamber temperature condition, if lower than 71°C ±3°C (160°F ±5°F) (see 3.2 a).

d. Test altitudes, if other than those specified (see 3.3).

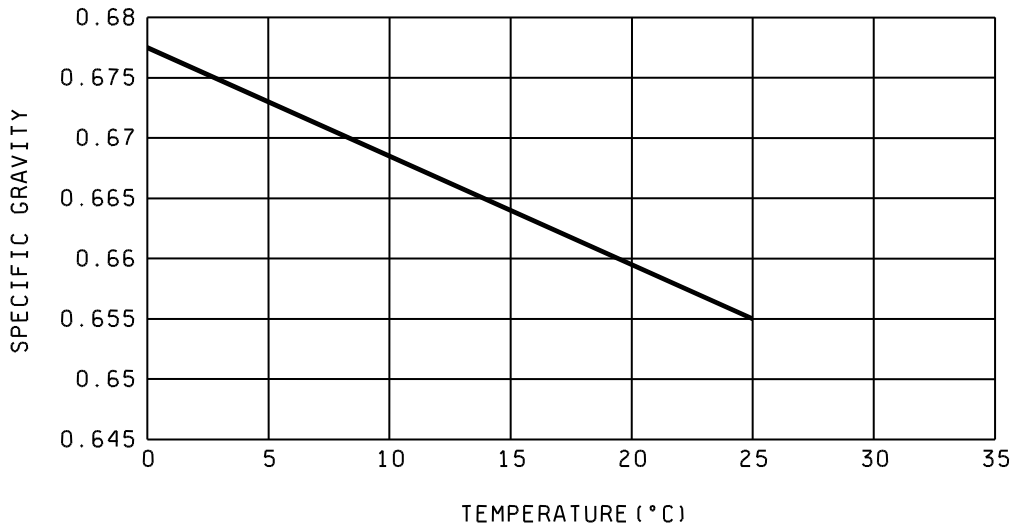

FIGURE 109-1. Specific gravity of n-hexane

METHOD 110A

SAND AND DUST

1. PURPOSE. The dust test is used during the development, test, and evaluation of equipment to ascertain their ability to resist the effects of a dry dust (fine sand) laden atmosphere. This test simulates the effect of sharp edged dust (fine sand) particles, up to 150 microns in size, which may penetrate into cracks, crevices, bearings, and joints, and cause a variety of damage such as fouling moving parts, making relays inoperative, forming electrically conductive bridges with resulting "shorts" and acting as a nucleus for the collection of water vapor, and hence a source of possible corrosion and malfunction of equipment. This test is applicable to all mechanical, electrical, electronic, electrochemical, and electromechanical devices for which exposure to the effects of a dry dust (fine sand) laden atmosphere is anticipated.

2. APPARATUS. The test facility shall consist of a chamber and accessories to control dust concentration, velocity, temperature, and humidity of dust-laden air. In order to provide adequate circulation of the dust laden air, no more than 50 percent of the cross-sectional area (normal to air flow) and 30 percent of the volume of the chamber shall be occupied by the test item(s). The chamber shall be provided with a suitable means of maintaining and verifying the dust concentration in circulation. A minimum acceptable means for doing this is by use of a properly calibrated smoke meter and standard light source. The dust-laden air shall be introduced into the test space in such a manner as to allow it to become approximately laminar in flow before it strikes the test item.

2.1 Dust requirements. The dust used in this test shall be a fine sand (97-99% by weight SiO_2) of angular structure, and shall have the following size distribution as determined by weight, using the U.S. Standard Sieve Series.

a. 100 percent of this dust shall pass through a 100-mesh screen.

b. 98 ±2 percent of the dust shall pass through a 140-mesh screen.

c. 90 ±2 percent of the dust shall pass through a 200-mesh screen.

d. 75 ±2 percent of the dust shall pass through a 325-mesh screen.

"140-mesh silica flour" as produced by the Ottawa Silica Company, Ottawa, Illinois, or equal, is satisfactory for use in the performance of these tests.

3. PROCEDURE. Place the test item in the chamber, positioned as near the center of the chamber as practicable. If more than one item is being tested, there shall be a minimum clearance of 4 inches between surfaces of test items or any other material or object capable of furnishing protection. Also, no surface of the test item shall be closer than 4 inches from any wall of the test chamber. Orient the item so as to expose the most critical or vulnerable parts to the dust stream. The test item orientation may be changed during the test if so required by the component specification.

Step 1 - Set the chamber controls to maintain an internal chamber temperature of 23°C (73°F) and a relative humidity of less than 22 percent. Adjust the air velocity to 1,750 ±250 feet per minute. Adjust the dust feeder to control the dust concentration at 0.3 ±0.2 grams per cubic foot. With test item nonoperating, maintain these conditions for 6 hours.

Step 2 - Stop the dust feed and reduce the air velocity to 300 ±200 feet per minute. Raise the internal chamber air temperature to 63°C (145°F) and adjust humidity control to maintain a relative humidity of less than 10 percent. Hold these conditions for 16 hours.

Step 3 - While holding chamber temperature at 63°C (145°F) adjust the air velocity to 1,750 ±250 fpm, maintain a relative humidity of less than 10 percent. Adjust the dust feeder to control the dust concentration at 0.3 ±0.2 grams per cubic foot. With the test item nonoperating, maintain these conditions for 6 hours.

Step 4 - Turn off all chamber controls and allow the test item to return to standard ambient conditions. Remove accumulated dust from the test item by brushing, wiping, or shaking, care being taken to avoid introduction of additional dust into the test item. Under no circumstances, shall dust be removed by either air blast or vacuum cleaning.

NOTE:

1. This test specimen may be operating during either or both of the 6-hour test periods (step 1 or 3) if so required by the component specification.

2. When the component specifications reference test conditions A, B, or C of the previous version of this test method, steps 1 through 4 of this test will be used unless otherwise specified.

4. SUMMARY. The following details are to be specified in the component specification.

a. Change in orientation during test, if required.

b. Whether component is to operate during test and length of time required for operation and measurements.

c. Whether the second 6-hour test at 63°C (145°F) shall be performed immediately after reaching stabilization in step 2.

METHOD 111A

FLAMMABILITY (EXTERNAL FLAME)

1. PURPOSE. This test is performed for the purpose of determining the flammability of a part exposed to an external flame. Flammability is defined as the ability of a part to support combustion. This can be determined by the following: the time it takes for a part to become self-extinguishing after application of a flame; that the part does not support violent burning; that exposure of a part to a flame does not result in an explosive-type fire; or that spreading of surface burning on larger parts is deterred. The principal factors which affect the results of an external flame test are -- the heat of the flame at the point of impingement; the size of the flame; the time of exposure to the flame; the volume of the part and other heat-sink effects; the presence of circulating materials and surfaces of the parts.

2. APPARATUS.

2.1 Test chamber. An enclosure protected from air currents, but provided with means for venting fumes and admitting an adequate supply of fresh air at the bottom, shall be used. A standard chemistry hood with the exhaust fan turned off, or a metal box about 2 feet wide by 3 feet high and 2 feet deep, with a removable front, a viewing window, and holes for air intake and venting of fumes, is satisfactory. Adequate safety precautions should be taken to protect personnel from possible explosion of the test specimens.

2.2 Mounting apparatus. Within the test chamber, a support stand with suitable adjustable vertical brackets or other mounting clamps shall be used to hold the specimens at the specified distance and position (see 3) with respect to the applied flame. Mounting clamps, in order not to act as heat sinks, shall be thermally insulated from the specimens. The flame shall not impinge on the clamp(s) or other devices which hold the specimens.

2.3 Propane torch. A propane torch, having a nozzle assembly conforming to Model TX-1 of "Bernzomatic Corporation", or equal, shall be the source of the flame. "Cracked" propane gas shall be used as the fuel. A suggested torch assembly is shown on figure 111-1, Burner head.

2.4 Timing device. A timing device, which can indicate time in seconds, shall be used to determine the time of application of the flame and the time of burning of visible flame on the specimen.

3. PROCEDURE. The specimen shall be mounted in the test chamber (see 2.1) with the mounting apparatus therein (see 2.2) and at the distance and position specified. The torch shall be placed so that the axis of the flame is in the vertical direction, unless otherwise specified in the individual specification. When the torch is ignited, and after the flame is stable, the flow of gas through the nozzle of the torch (see 2.3) shall be adjusted so that the inner-cone length is 1/2 inch between the inner-cone tip and a point in the plane of the nozzle rim. The specimen shall be placed so that the point of impingement of the flame on the specimen is 1-1/2 inches from the nozzle rim along the flame axis. The point of impingement of the flame shall be as specified in the individual specification. The flame shall be applied to the specimen for a period of 15 seconds unless specified in the individual specification, as determined by the timing device (see 2.4), and then removed. Upon removal of the applied flame, the time of burning of visible flame on the specimen, as determined by the timing device, shall be recorded. The recorded time shall then be compared with the allowable time specified in the individual specification. Any violent burning of the specimen or explosive-type fire shall be recorded.

4. CLEANING. In order to clearly observe the burned area; carbon from the propane gas may be removed by brushing or buffing the specimen.

5. MEASUREMENTS. Upon completion of the test, measurements shall be made as specified in the individual specification.

6. SUMMARY. The following details are to be specified in the individual specification:

a. Direction of axis of flame, if other than vertical (see 3).

b. Point of impingement of applied flame (see 3).

c. Time of application of flame, if other than 15 seconds (see 3).

d. Allowable time for burning of visible flame on specimen (see 3).

e. Measurements after test (see 5).

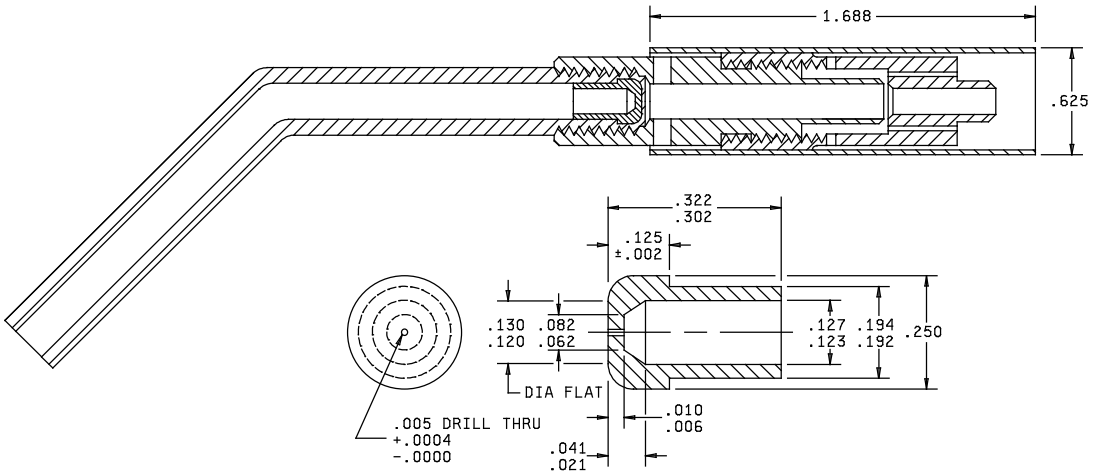

Inches	mm	Inches	mm
.0004	0.01	.125	3.18
.002	0.05	.127	3.23
.005	0.13	.130	3.30
.006	0.15	.192	4.88
.010	0.25	.194	4.93
.021	0.53	.250	6.35
.041	1.04	.302	7.67
.062	1.57	.322	8.18
.082	2.08	.625	15.88
.120	3.05	1.688	42.88
.123	3.12		

MATERIAL: BRASS

FIGURE 111-1. Burner head.

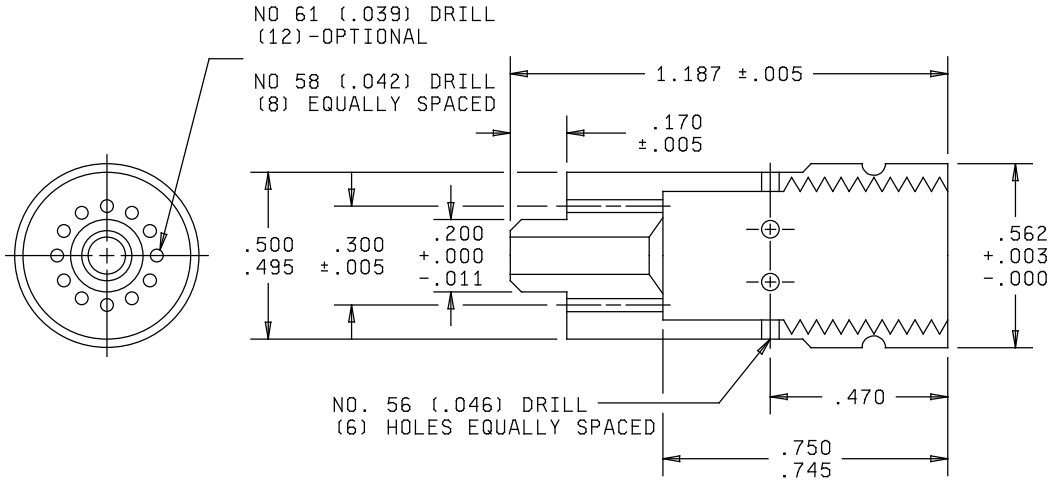

Inches	mm	Inches	mm
.003	0.08	.300	7.62
.005	0.13	.470	11.94
.011	0.28	.495	12.57
.039	0.99	.500	12.70
.042	1.07	.562	14.27
.046	1.17	.745	18.92
.170	4.32	.750	19.05
.200	5.08	1.187	30.15

MATERIAL: BRASS

2

BODY-BURNER

FIGURE 111-1. Burner head - Continued.

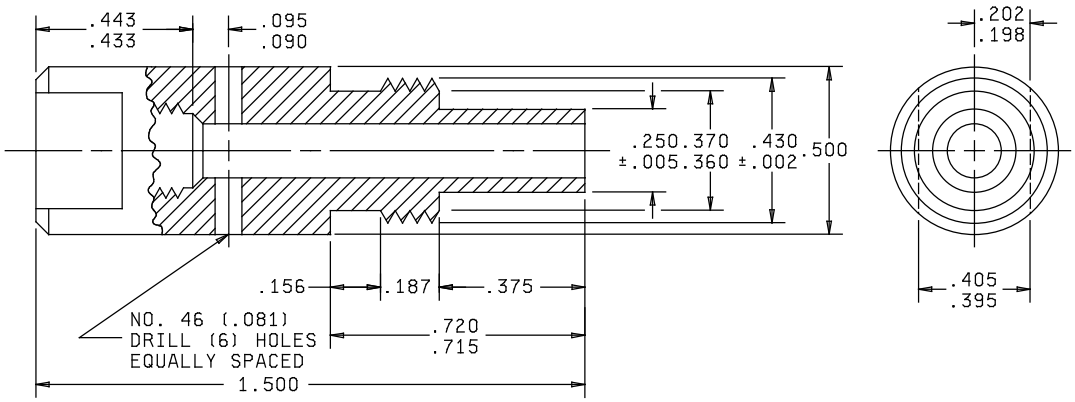

Inches	mm	Inches	mm
.002	0.05	.370	9.40
.005	0.13	.375	9.53
.081	2.06	.395	10.03
.090	2.29	.405	10.29
.095	2.41	.430	10.92
.156	3.96	.433	11.00
.187	4.75	.443	11.25
.198	5.03	.500	12.70
.202	5.13	.715	18.16
.250	6.35	.720	18.29
.360	9.14	1.500	38.10

MATERIAL: BRASS

3

BASE-BURNER

FIGURE 111-1. Burner head - Continued.

METHOD 112E

SEAL

1. PURPOSE. The purpose of this test method is to determine the effectiveness of the seal of a component part which has an internal cavity which is either evacuated or contains air or gas. A defect in any portion of the surface area of a sealed part can permit entrance of damaging contaminants which will reduce its effective life. This test will detect leaks due to the use of inferior sealing materials, or to the manufacturing processes used to form the seal. The degree of completeness of the seal can be verified by testing in the "as received" condition or after submission to other environmental or physical-characteristics tests, such as thermal shock, physical shock, or vibration. This test method does not include the many existing versions of lesser-sensitivity seal tests now appearing in some specifications, which verify such requirements as "water tightness", "moisture proofness", etc. In those lesser-sensitivity seal tests, parts are submerged to various depth in water, heated water, water or alcohol with a vacuum, water with a wetting agent, etc; all these tests depend on observation of bubbles as the criterion for failure.

1.1 Definitions.

a. Standard leak rate. Standard leak rate is defined as the quantity of dry air at 25°C in atmospheric cubic centimeters flowing through a leak or multiple leak paths per second when the high-pressure side is at 1 atmosphere (760 mm Hg absolute) and the low-pressure side is at a pressure of not greater than 1 mm Hg absolute. Standard leak rate shall be expressed in units of atmospheric cubic centimeters per second (atm cm^3/s).

b. Measured leak rate. Measured leak rate (R_1) is defined as the leak rate of a given package as measured under specified conditions and employing a specified test medium. Measured leak rate shall be expressed in units of atmospheric cubic centimeters per second (atm cm^3/s). For the purpose of comparison with rates determined by other methods of testing, the measured leak rates must be converted to equivalent standard leak rate.

c. Equivalent standard leak rate. The equivalent standard leak (L) rate of a given package, with a measured leak rate (R_1), is defined as the leak rate of the same package with the same leak geometry, which would exist under the standard conditions of 1.1a. The formula (does not apply to procedure IIIb) in 5.4.3.2.3 represents the L/R_1 ratio and gives the equivalent standard leak rate (L) of the package with a measured leak rate (R_1) where the package volume and leak test conditioning parameters influence the measured value of (R_1). The equivalent standard leak rate shall be expressed in units of atmospheric cubic centimeters per second (atm cm^3/s).

d. Sensitivity. (Minimum detectable leak rate). Sensitivity is the smallest leak rate that an instrument, method, or system is capable of measuring or detecting under specified conditions. To compare sensitivities of two or more different test conditions, the sensitivity should be converted to sensitivity under standard conditions by using the appropriate conversion factors.

e. Ambient background. For a scintillation-crystal counting station, ambient background is the oscillatory reading obtained on the meter readout due to electrical noise plus the reading in counts per minute due to cosmic radiation that penetrates the lead shielding of the closed crystal system. This value must be determined just before device counting.

2. TEST CONDITIONS.

2.1 Selection. There are six test conditions (A, B, C, D, E, and F) in this method. Test conditions A and B utilize oil as a means to detect gross leaks by the observation of bubbles. Both of these tests will detect leaks of a nominal value of 10^{-5} atm cm^3/s. Test condition B is used to test parts which will not withstand the temperature required in test condition A. Test condition C detects fine leaks by using a tracer gas and apparatus to measure a leakage rate (R_1) to a nominal of 10^{-8} atm cm^3/s. The apparatus can be calibrated for any leakage rate within its range. Test condition D utilizes a fluorocarbon liquid at 125°C ±5°C (257°F ±9°F) at ambient pressure and detects gross leaks by the observation of bubbles. This latter test condition provides an alternate gross leak test to test condition A. Test condition E utilizes two fluorocarbon liquids; one under pressure followed by the other at 125°C ±5°C (257°F ±9°F) at room ambient pressure and detects gross leaks by the observation of bubbles. This test condition provides a measure of leakage rate of a nominal value of 10^{-5} atm cm^3/s. Test condition F utilizes a fluorocarbon liquid and a fluorocarbon vapor detector to detect gross leaks. Test condition F provides a measure of leakage rate of a nominal value of 10^{-5} atm cm^3/s. Both test conditions C and F require more expensive commercial equipment and trained personnel, but the equipment provides automatic and quantitative readings. The selection of a test condition to perform the seal test depends on the state of the art of component part manufacturing, the leakage rate which can be tolerated for the desired reliability, the frequency of testing, range of test conditions, cavity size, and whether the testing is to be on a 100 percent production or on a periodic basis. The individual specification shall specify the test condition letter required. When test condition C is specified, the procedure number (see 5.4) and the degree of leakage rate sensitivity required shall be included. The following is included as a sensitivity and applicability guide:

Test condition A (bubble test - mineral oil or peanut oil at 125°C ±3°C (257°F ±6°F)). Use when a nominal sensitivity of 10^{-5} atm cm^3/s is sufficient.

Test condition B (bubble test - silicone oil at room ambient temperature 25°C ±2°C (77°F ±3.6°F), with a vacuum resulting in an absolute pressure of not greater than 1.5 inches of mercury (not greater than 38.1 torr). Use to test parts which cannot withstand the temperature of test condition A, and when a nominal sensitivity of 10^{-5} atm cm^3/s is sufficient.

Test condition C (tracer gas test). Use when a nominal sensitivity of 10^{-8}atm cm^3/s is sufficient.

Procedure I - (For parts having an evacuation tube which is unsealed and is to be connected to the leak detector for test purposes.)

Leak from outside of part to inside. Check the seal of evacuation tube by backfilling with air or gas. Then subject to procedure IIIa, IIIb, IIIc or IV.

Procedure II - (For parts having an evacuation tube which is unsealed to permit pressurizing with a tracer gas.)

Leak from inside of part to outside. Check the seal of evacuation tube by backfilling with air or gas. Then subject to procedure IIIa, IIIb, IIIc, or IV.

Procedure III - (For parts which are to be tested without breaking their seals.)

Fixed method (IIIa) - Part not filled with tracer gas. Force gas into leaks, then detect its escape. Then subject to test condition A, B or D (see 5.4.3.2.1 permitting use of water), as applicable, to check for gross leaks.

IIIb - Part not filled with tracer gas. Force radioactive gas into leaks, then use a radioactivity counter to determine gas that has entered part. Then subject to test condition A, B, or D (see 5.4.3.2.2.4 permitting use of water), as applicable, to check for gross leaks.

Flexible method (IIIc). Part not filled with tracer gas. Force gas into leaks then detect its escape. Then subject to test condition A, B or D (see 5.4.3.2.3 permitting use of water), as applicable, to check for gross leaks.

Procedure IV - (For parts which are to be tested without breaking their seals.) Parts backfilled with tracer gas as normally supplied.

Leak from inside of part to outside, then subject to test condition A, B or D (see 5.4.4 permitting use of water), as applicable, to check for gross leaks.

Test condition D (gross leak bubble test - Fluorocarbon liquid at 125°C ±5°C (257°F ±9°F). Use as an alternate when test condition A is specified as a gross leak test.

Test condition E (bubble test - two fluorocarbon liquids - one at pressure followed by immersion in a second liquid at 125°C ±5°C (257° ±9°F). Use when a nominal sensitivity of 10^{-5} atm cm^3/s is sufficient.

Test condition F (fluorocarbon vapor detection test). Use when a nominal sensitivity of 10^{-5} atm cm^3/s is sufficient.

2.2 Substitution. The individual specification should specify the lowest sensitivity test condition which is practical; a higher sensitivity test which can be calibrated shall be permitted, i.e., if a test is specified such as test condition A requiring a sensitivity of 10^{-5} atm cm^3/s, test condition C may be used since it can be calibrated to read this leakage rate. Substitution of test condition B or C should be made to test condition A when parts are rated at a temperature lower than 130°C (266°F). Test condition D may be substituted for test condition A.

3. TEST CONDITION A.

3.1 Materials.

3.1.1 Mineral oil or peanut oil. The oil used for the bath shall be clear mineral oil or peanut oil having a universal Saybolt viscosity of 175 to 190 seconds when tested at 38°C (100°F).

3.2 Apparatus.

3.2.1 Heated oil container. The container for the oil bath shall be of sufficient depth to immerse the uppermost portion of the enclosure or seal to be tested to a depth of 1 inch (25.4 mm) below the surface of the bath. The container shall be capable of maintaining the oil at the required temperature.

3.3 Precautions. This condition shall not be used for parts rated at a temperature lower than 130°C (266°F). It shall not be used for parts which contain seals made of materials which will outgas due to the temperature of the bath.

3.4 Preparation of specimens. Immediately before immersion it shall be determined that the specimen is at room ambient temperature and free of any foreign (including labels) matter. If applicable, the critical side of the specimen shall be determined. The critical side is defined as the side having the greatest number of seals or length of seal.

3.5 Procedure. This test consists of one immersion of the specimen or groups of specimens into a bath of clear mineral oil or peanut oil (see 3.1.1) maintained at a temperature of 125°C ±3°C (257°F ±6°F). The specimen shall be placed in the oil bath with the critical side (or side of special interest) in a horizontal position facing up. If the specimen has no critical side, it shall be placed in the bath with its major axis in a horizontal position. The specimen shall be completely submerged in the bath, with the uppermost portion of the enclosure or seal at a depth of 1 inch (25.4 mm), and left in that position for a minimum duration of 1 minute. The specimen shall be carefully observed during the entire duration of the immersion for indication of a poor seal as evidenced by a continuous stream of bubbles emanating from the specimen. After the test is completed, the specimen shall be cleaned in a suitable degreaser and permitted to dry thoroughly before any additional tests are performed.

4. TEST CONDITION B.

4.1 Materials.

4.1.1 Silicone oil. The oil used for the bath shall be clear silicone oil having a viscosity of 20 centistokes at 25°C (77°F).

4.2 Apparatus.

4.2.1 Reduced pressure vessel. The vessel for the oil bath shall be of sufficient depth to immerse the uppermost portion of the enclosure or seal to be tested to a depth of 1 inch (25.4 mm) below the surface of the bath, over which can be drawn a vacuum resulting in an absolute pressure of not greater than 1.5 inches of mercury (not greater than 38.1 torr).

4.2.2 Vacuum pump. The vacuum pump shall be capable of evacuating and holding a vacuum resulting in an absolute pressure of not greater than 1.5 inches of mercury (not greater than 38.1 torr) for a minimum duration of 1 minute in the reduced pressure vessel (see 4.2.1).

4.2.3 Degassing of silicone oil. The silicone oil shall be placed in the test fixture and a pressure of 1 inch (25.4 mm) of mercury or less attained over the fluid for as long as is necessary to degas the fluid. Such degassing is complete when no further bubbling or frothing is present in the fluid. Throughout the test, components shall be lowered gently in the fluid to prevent aeration of the fluid. The fluid shall not be poured from one container to another without first being degassed again before testing.

4.3 Preparation of specimens. As specified in 3.4.

4.4 Procedure. This test consists of one immersion of the specimen or group of specimens into a bath of clear silicone oil (see 4.1.1) maintained at room ambient temperature. The specimen shall be placed in the oil bath with the critical side (or side of special interest) in a horizontal position facing up. If the specimen has no critical side, it shall be placed in the bath with its major axis in a horizontal position. The specimen shall be completely submerged in the bath with the uppermost portion of the enclosure or seal at a depth of 1 inch (25.4 mm). A vacuum resulting in an absolute pressure of not greater than 1.5 inches of mercury (not greater than 38.1 torr) shall be drawn and held over the bath for a minimum duration of 1 minute. The specimen shall be carefully observed during the entire duration of the immersion for indication of a poor seal as evidenced by a continuous stream of bubbles emanating from the specimen. After the test is completed, the specimen shall be cleaned in a suitable degreaser and permitted to dry thoroughly before any additional tests are performed.

4.5 Precaution. This test condition should not be used either as a separate test or a gross leak test for component parts which are to be subsequently attached to printed circuit board assemblies. Since complete removal of silicone oil residues is difficult, the oil will be transferred unknowingly to other parts during assembly processes. Traces of silicone can result in poor solder wettability of component part leads, poor adhesion to sealants, and mealing of the conformal coating on the printed circuit board.

5. TEST CONDITION C.

5.1 Materials.

5.1.1 Tracer gases. When performing tests in accordance with procedures I, II, and IV of this condition, tracer gases, i.e., helium, argon, or other rare gas, or a mixture of a gas with nitrogen (such as 90 percent nitrogen and 10 percent helium) shall be used. The tracer gas used in procedures IIIa and IIIc shall be helium. The tracer gas used in procedure IIIb shall be the radioactive gas, krypton 85.

5.2 Apparatus. For all the procedures of this test condition, the test apparatus, exclusive of pressurization equipment, shall be calibrated using a diffusion type calibrated standard leak at least once each working shift.

5.2.1 Mass-spectrometer-type leak detector. For procedures I, II, IIIa, IIIc, and IV of this test condition, a commercially available mass-spectrometer-type leak detector, preset to read a tracer-gas content, shall be used to measure the leakage rate of gas through a faulty seal. Another instrument may be used if it can be demonstrated to the Government that the instrument, properly calibrated to read tracer-gas content, has the required leakage-detection sensitivity (see 2.1).

5.2.1.1 Chambers. Depending on which procedure is used (see 5.4), suitable pressure or vacuum chambers are required.

5.2.1.2 Pumps. Depending on which procedure is used (see 5.4), suitable pressure or vacuum pumps are required.

5.2.2 Radioactive-gas detection apparatus. Apparatus for procedure IIIb shall consist of:

a. Radioactive tracer gas activation console.

b. Counting equipment consisting of a scintillation crystal, photomultiplier tube, preamplifier, ratemeter, and krypton 85 reference standards. The counting station shall be of sufficient sensitivity to determine through the device wall the radiation level of any krypton 85 tracer gas present within the device. The counting station shall have a minimum sensitivity, in c/m per μCi, corresponding to a leak rate of 10^{-9} atm cm^3/ s of krypton 85 and shall be calibrated at least once every working shift using krypton 85 reference standards and following the equipment manufacturer's instruction.

c. A tracer gas consisting of a mixture of krypton 85 and dry nitrogen. The concentration of krypton 85 in dry nitrogen shall be no less than 100 microcuries per atmospheric cubic centimeter. This value shall be determined at least once each 30 days and recorded in accordance with the calibration requirements of this standard.

5.3 Supplementary tests. When parts to be tested are normally evacuated through a tube and are sealed in some manner prior to delivery, procedures I and II (see 5.4.1 and 5.4.2) will require a separate verification of the seal of the evacuation tube in conjunction with this test method, using the mass-spectrometer-type leak detector (see 5.2.1). The verification may be accomplished by backfilling the specimen with air or gas at a specified pressure and then submitting the specimen to either procedure IIIa, IIIb, IIIc, or IV.

5.4 Procedures. This test condition consists of five procedures (see 5.4.1 to 5.4.4, inclusive), the choice of which must be specified in the individual specification. Procedure IV is the preferred method of performing this test for parts that are not evacuated.

5.4.1 Procedure I. The mass-spectrometer-type leak detector shall be coupled to the unsealed evacuation tube of the specimen, and a vacuum created within the specimen. It is extremely important that the coupling connections between the specimen and the leak detector be perfectly sealed. The specimen shall then be subjected to a gas atmosphere either by surrounding the specimen with the gas or by spraying the specimen thoroughly with a jet of the gas. If a defect exists in the specimen, an amount of gas that depends upon the size of the defect will be drawn through it and passed into the leak detector, which will read the leakage rate. When this portion of the procedure is completed, the specimen shall be filled with air or gas at a specified pressure and having a known percentage of tracer gas. The evacuation tube shall then be pinched off and sealed. After sealing, the seal of the tube shall be verified by either procedure IIIa, IIIb, IIIc or IV, if filled with tracer gas.

5.4.2 Procedure II. The mass-spectrometer-type leak detector shall be coupled to the chamber. The specimen shall be placed in the chamber, and a tube leading from the gas source and having a known percentage of tracer gas shall be connected to the unsealed evacuation tube of the specimen. It is extremely important that the coupling connections between the specimen and the leak detector be perfectly sealed. The chamber shall then be evacuated and the gas forced under pressure into the specimen. If a leak exists, the gas passes through the specimen into the chamber and then into the leak detector, which will read the leakage rate. If pressure cycling is required, the individual specification shall specify the number of times that a pressure cycle shall be applied. When this portion of the procedure is completed, the specimen shall be filled with air or gas at a specified pressure and having a known percentage of tracer gas. The evacuation tube shall then be pinched off and sealed. After sealing, the seal of the tube shall be verified by either procedure IIIa, IIIb, IIIc or IV, if filled with a tracer gas.

5.4.3 Procedure III. The tests shall be conducted in accordance with procedure IIIa, or IIIc. When bomb pressure specified exceeds the device capability, alternate pressure, exposure time and dwell time may be used provided they satisfy the leak rate pressure, time relationships which apply and provided no less than 30 psig bomb pressure is applied in any case.

5.4.3.1 Testing precautions.

a. These precautions are applicable to procedures IIIa, IIIb, and IIIc. To avoid spurious indications, contaminants and surface coatings that may conceal existing leaks, and tracer gas that may be absorbed or adsorbed on the surfaces of the specimen, shall be removed. These test procedures shall not apply to organic-coated parts.

b. Test procedure IIIa is a "fixed" method with specified conditions per table I that will insure the test sensitivity necessary to detect the required leak rate (R1).

c. Test procedure IIIc is a "flexible" method that allows the variance of test conditions in accordance with the formula of 5.4.3.2.3 to detect the specified equivalent standard leak rate at a predetermined leak rate (R1).

5.4.3.2 General procedure. For IIIa and IIIc the completed device(s) shall be placed in a sealed chamber which is then pressurized with a tracer gas of 100 +0, -5 percent helium for the required time and pressure. The pressure shall then be relieved and each specimen transferred to another chamber or chambers which are connected to the evacuating system and a mass-spectrometer-type leak detector. When the chamber(s) is evacuated, any tracer gas which was previously forced into the specimen will thus be drawn out and indicated by the leak detector as a measured leak rate (R1). The number of devices removed from pressurization for leak testing shall be limited such that the test of the last device can be completed within 60 minutes for procedure IIIa or within the chosen value of dwell time (t_z) for procedure IIIc.

5.4.3.2.1 Procedure IIIa. The device(s) shall be tested using the appropriate conditions specified in table I for the internal cavity volume of the package under test. The time (t) is the time under pressure and time (t_z) is the maximum time allowed after release of pressure before the device(s) shall be read. This method shall not be used if the maximum equivalent standard leak rate limit given in the procurement document is less than the limits specified herein for procedure IIIc. Upon completion of this procedure, the specimen shall be checked for gross leaks by subjecting the specimen either to test condition A, B, or D. Water, at room ambient temperature and a pressure of 2.5 inches (63.5 mm) of mercury, may be used in place of silicone oil, if test condition B is used to verify gross leaks.

TABLE I. Fixed conditions procedure IIIa.

Volume of package (cm^3)	Bomb condition			R1 Reject limit (atm cm^3/s He)
	1bf/in^2 gage	Exposure time hours	Maximum dwell hours	
V < 0.40	60 ±2	2 +0.2, -0	1	5×10^{-8}
V ≥ 0.40	60 ±2	2 +0.2, -0	1	2×10^{-7}
V ≥ 0.40	30 ±2	4 +0.4, -0	1	1×10^{-7}

5.4.3.2.2 Procedure IIIb.

5.4.3.2.2.1 Activation parameters. The activation pressure and soak time shall be determined in accordance with the following equation:

$$Q_S = \frac{R}{skT\bar{P}t}$$

The parameters of equation (1) are defined as follows:

Q_S = The maximum calculated leak rate allowable, in atm cm^3/sKr, for the devices to be tested.

R = Counts per minute above the ambient background after activation if the device leak rate were exactly equal to Q_S. This is the reject count above the background of both the counting equipment and the component, if it has been through prior radioactive leak tests.

s = The specific activity, in microcuries per atmospheric cubic centimeter, of the krypton 85 tracer gas in the activation system.

k = The overall counting efficiency of the scintillation crystal in counts per minute per microcurie of krypton 85 in the internal void of the specific component being evaluated. This factor depends upon component configuration and dimensions of the scintillation crystal. The counting efficiency shall be determined in accordance with 5.4.3.2.2.2.

T = Soak time, in hours, that the devices are to be activated.

$\bar{P}$ = $P_e^2 - P_i^2$, where P_e is the activation pressure in atmospheres absolute and P_i is the original internal pressure of the devices in atmospheres absolute. The activation pressure (P_e) may be established by specification or if a convenient soak time (T) has been established, the activation pressure (P_e) can be adjusted to satisfy equation (1).

t = Conversion of hours to seconds and is equal to 3,600 seconds per hour.

5.4.3.2.2.2 Determination of counting efficiency (k). The counting efficiency (k) of equation in 5.4.3.2.2.1 shall be determined as follows:

a. Five representative units of the device type being tested shall be tubulated and the internal void of the device shall be backfilled through the tubulation with a known volume and known specific activity of krypton 85 tracer gas and the tubulation shall be sealed off.

b. The counts per minute shall be directly read in the shielded scintillation crystal of the counting station in which the devices are read. From this value, the counting efficiency, in counts per minute per microcurie, shall be calculated.

5.4.3.2.2.3 Evaluation of surface sorption. All device encapsulations consisting of glass, metal, and ceramic or combinations thereof, including coatings and external sealants, shall be evaluated for surface sorption of krypton 85 before establishing the leak test parameters. Representative samples of the questionable material shall be subjected to the predetermined pressure and time conditions established for the device configuration as specified by 5.4.3.2.2.1. The samples shall then be counted every 10 minutes, with count rate noted, until the count rate becomes asymptotic with time. (This is the point in time at which surface sorption is no longer a problem.) This time lapse shall be noted and shall determine the "wait time" specified in 5.4.3.2.2.4.

5.4.3.2.2.4 Specific procedure IIIb. The devices shall be placed in radioactive tracer gas activation tank. The activation chamber may be partially filled with inert material to reduce pumpdown time. The tank shall be evacuated to 0.5 torr. The devices shall be subjected to a minimum of 2 atmospheres absolute pressure of krypton 85/dry nitrogen mixture for the time necessary to satisfy the equation. Actual pressure and soak time shall be determined in accordance with 5.4.3.2.2.1. The R value in counts per minute shall be not less than 600 above ambient background. The krypton 85/dry nitrogen gas mixture shall be evacuated to storage until 0.5 torr vacuum exists in the activation tank. This evacuation shall be completed within 3 minutes maximum. The activation tank shall then be backfilled with air (air wash). The devices shall then be removed from the activation tank and leak tested within 1 hour after gas exposure with a scintillation-crystal-equipped counting station. Device encapsulations that come under the requirements of 5.4.3.2.2.3 shall be exposed to ambient air for a time not less than the "wait time" determined by 5.4.3.2.2.3. In no case will the time between removal from the activation chamber and test exceed 1 hour. This exposure shall be performed after gas exposure but before determining leak rate with the counting station. Device encapsulations that do not come under the requirements of 5.4.3.2.2.3 may be tested without a "wait time". (The number of devices removed from pressurization for leak testing shall be limited such that the test of the last device can be completed within 1 hour.) The actual leak rate of the component shall be calculated with the following equation:

$$Q = \frac{(ACTUAL\ READOUT\ IN\ NET\ COUNTS\ PER\ MINUTE)\ X\ Q_S}{R}$$

Where Q = Actual leak rate in atm cm^3/s, and Q_S and R are defined in 5.4.3.2.2.1.

Unless otherwise specified, devices that exhibit a leak rate equal to or greater than 1×10^{-8} atmospheric cubic centimeters of krypton 85 per second shall be considered a failure.

Upon completion of this procedure, the specimen shall be checked for gross leaks by subjecting the specimen either to test condition A, B, or D. Water, at room ambient temperature and a pressure of 2.5 inches (63.5 mm) of mercury, may be used in place of silicone oil, if test condition B is used to verify gross leaks.

5.4.3.2.2.5 Personnel precautions. A Nuclear Regulatory Commission (NRC) license is necessary for possession and use of the krypton 85 leak-test equipment. In the use of gas, code of Federal regulations Nuclear Regulatory Commission Rules and Regulations, Title 10, Chapters 1, 20, 30, 31, and 32 should be followed and the maximum permissible tolerance levels prescribed by the National Committee on Radiological Protection should be observed.

5.4.3.2.3 Procedure IIIc. Values for bomb pressure exposure time and dwell time shall be chosen such that actual measured tracer gas leak rate (R_1) reading obtained for the device under test (if defective) will be greater than the minimum detection sensitivity capability of the mass spectrometer. The devices shall be subjected to a minimum of 2 atmospheres absolute of helium atmosphere. If the chosen dwell time (t_z) is greater than 60 minutes, graphs shall be plotted to determine an R1 value which will assure overlap with the selected gross leak test condition. The chosen values, in conjunction with the value of the internal volume of the device package to be tested and the maximum equivalent standard leak rate (L) limit (as shown below or as specified in the applicable procurement document), shall be used to calculate the measured leak rate (R_1) limit using the following formula:

$$R_1 = \frac{LP_E}{P_O}\left(\frac{M_A}{M}\right)^{1/2}\left\{1 - e^{-\left[\frac{Lt_1}{VP_O}\left(\frac{M_A}{M}\right)^{1/2}\right]}\right\} e^{-\left[\frac{Lt_2}{VP_O}\left(\frac{M_A}{M}\right)^{1/2}\right]}$$

R_1 = The measured leak rate of tracer gas (He) through the leak in atm cm^3/s He.
L = The equivalent standard leak rate in atm cm^3/s air.
P_E = The pressure of exposure in atmospheres absolute.
P_O = The atmospheric pressure in atmospheres absolute (1 atmosphere).
M_A = The molecular weight of air in grams (28.7 grams).
M = The molecular weight of the tracer gas (helium) in grams (4 grams).
t_1 = The time of exposure to P_E in seconds.
t_2 = The dwell time between release of pressure and leak detection in seconds.
V = The internal volume of the device package cavity in cubic centimeters.

Unless otherwise specified, devices with an internal cavity volume of 0.01 cm^3 or less shall be rejected if the equivalent standard leak rate (L) exceeds 5×10^{-8} atm cm^3/s. Devices with an internal cavity volume greater than 0.01 cm^3 and equal to or less than 0.4 cm^3 shall be rejected if the equivalent standard leak rate (L) exceeds 1×10^{-7} atm cm^3/s. Devices with an internal cavity volume greater than 0.4 cm^3 shall be rejected if the equivalent standard leak rate (L) exceeds 1×10^{-6} atm cm^3/s.

Upon completion of this procedure, the specimen shall be checked for gross leaks by subjecting the specimen either to test condition A, B, or D. Water, at room ambient temperature and a pressure of 2.5 inches of mercury, may be used in place of silicone oil, if test condition B is used to verify gross leaks.

5.4.4 Procedure IV. The specimen, which is backfilled and sealed during production with a known percentage of tracer gas, shall be placed in a chamber connected to the mass-spectrometer-type leak detector, and the chamber evacuated. The internal pressure of the specimen shall be one atmosphere or greater. If a leak exists, the gas passes through the specimen into the chamber and then into the leak detector which will read the leakage rate. If specified, the specimen shall be perforated to determine if a gas is actually present. Upon completion of this procedure, the specimen shall be checked for gross leaks by subjecting the specimen either to test condition A, B, or D. Water, at room ambient temperature and a pressure of 2.5 inches (63.5 mm) of mercury, may be used in place of silicone oil, if test condition B is used to verify gross leaks.

6. TEST CONDITION D.

6.1 Materials.

6.1.1 Fluorocarbon liquid. The fluid shall be D02, D02-TS, D03, FC-40 1/ or FC-43 2/.

6.2 Apparatus.

6.2.1 Heated fluid container. The container for the fluid shall be made of pyrex glass and shall be sufficient size to hold the test specimen in the fluid and to maintain a temperature of 125°C ±5°C (257°F ±9°F).

6.2.2 Filter. A filter shall be used which is capable of removing particles greater than 1 micron in size from the fluid.

6.2.3 Magnifier. A 3X minimum magnifier or a stereo zoom microscope shall be used for observation of bubbles emanating from the test specimens when immersed in the indicator fluid.

6.3 Precautions. The following precautions shall be observed:

a. Fluorocarbon liquids shall be filtered as specified in 6.2.2. Bulk filtering and storage is permissible. Leak indicator fluids, which have accumulated observable quantities of particulate matter during use, shall be discarded or reclaimed by filtration for reuse. Leak detecting fluids shall not be used for more than one eight-hour shift without being refiltered.

b. The observation container shall contain sufficient fluid to assure coverage of the test specimen to a minimum depth of two inches.

c. Illumination shall be a lighting source capable of providing at least 15,000 foot candles at the test specimen position. The lighting source shall not require calibration but the light level shall be verified at the test specimen position. The background behind the glass observation container should be a dull, non-reflective black material.

d. The observation container should be covered at all times when not in use to minimize evaporation losses and moisture adsorption.

e. Test specimens to be tested should be free from foreign material on the surface, including conformal coatings and markings which may contribute to erroneous test results.

6.4 Procedure. The test specimens, mounted on specified fixtures to hold them in the fluid, shall be immersed, with the uppermost portion at the minimum depth of 2 inches below the surface of the fluid, lid downward, one at a time (or in such a configuration that a single bubble from a single specimen out of a group under observation may be clearly observed as to its occurrence and source). The fluid shall be maintained at a temperature of 125°C ±5°C (257°F ±9°F). The specimens shall be observed against a dull non-reflective black background through the magnifier (see 6.2.3) from the instant of immersion until 20 seconds after immersion. Leakers will be identified by a single bubble or a stream of bubbles. Specimens from which a single bubble is observed is considered to be a reject.

1/ D02, D02-TS, and D03 are the registered trade mark of Ausimont (Division of Montedison).
2/ Minnesota Mining Co. (3M) registered trade name.

7. TEST CONDITION E.

7.1 Materials.

7.1.1 Fluorocarbon liquid. The fluids shall be D/80, FC-72 or PP-1 fluorocarbon detector fluids, and D02, D02-TS, D03, FC-40, FC-43, PP-7 or PP-9 fluorocarbon indicator fluids.

7.2 Apparatus.

7.2.1 Heated fluid container. The container for the fluid shall be made of pyrex glass and shall be of sufficient size to hold the test specimen in the fluid and to maintain a temperature of 125°C ±5°C (257°F ±9°F).

7.2.2 Filter. A filter shall be used which is capable of removing particles greater than 1 micron in size from the fluid.

7.2.3 Magnifier. A magnifier with a magnification in the range between 3X to 30X for observation of bubbles emanating from devices when immersed in the indicator fluid.

7.2.4 Chamber. A vacuum/pressure chamber for the evacuation and subsequent pressure bombing of device up to 75 lbf/in^2 up to 10 hours.

7.2.5 Lighting source. A lighting source capable of producing at least 15,000 foot candles in air at a distance equal to that which the most distant device in the bath will be from the source.

7.2.6 Instruments. Suitable calibrated instruments to indicate the test temperature pressures and times are as specified.

7.2.7 Fixtures. Suitable fixtures to hold the device(s) in the indicator fluid.

7.3 Precautions. The following precautions shall be observed.

a. Fluorocarbon liquids shall be filtered as specified in 7.2.2. Bulk filtering and storage is permissible. Leak indicator fluids, which have accumulated observable quantities of particulate matter during use, shall be discarded or reclaimed by filtration for reuse. Leak detecting fluids shall not be used for more than one eight-hour shift without being refiltered.

b. The observation container shall contain sufficient fluid to assure coverage of the test specimen to a minimum depth of two inches (50.8 mm).

c. Illumination shall be a lighting source capable of providing at least 15,000 foot candles at the test specimen position. The lighting source shall not require calibration but the light level shall be verified at the test specimen position. The background behind the glass observation container should be a dull, non-reflective black material.

d. The observation container should be covered at all times when not in use to minimize evaporation losses and moisture adsorption.

e. Test specimens to be tested should be free from foreign material on the surface, including conformal coatings and markings that may contribute to erroneous test results.

f. Precautions should be taken to prevent operator injury due to package rupture or violent evolution of bomb fluid when testing large packages.

7.4 Procedure. The test specimens mounted on specified fixtures to hold them in the leak detecting fluid shall be inserted into the combination vacuum-pressure vessel and the applied ambient pressure shall be reduced to less than 5 torr for 1 hour. Then without breaking vacuum, a sufficient quantity of leak detecting fluid (see 7.1.1) to cover the test specimens, shall be drawn into the vacuum/pressure vessel by inserting a transfer tube from the vacuum/pressure vessel into a container of leak detecting fluid and opening a valve in the tube. For test specimens with an internal cavity volume of 0.1 cm^3 or less, the pressure in the vessel shall be increased to 90 lbf/in^2 and maintained at that pressure for 3 hours minimum. For test specimens with an internal volume in excess of 0.1 cm^3, the pressure shall be increased to 50 lbf/in^2 and maintained at that pressure for 3 hours minimum. After pressurization, the pressure shall be released from the pressure vessel and the test specimens shall be removed from the pressure vessel, and retained in a bath containing the leak detecting fluid. Then they shall be dried for 3 ±1 minutes in air prior to immersion in the indicator fluid. The test specimens shall be immersed with the uppermost portion at a minimum depth of 2 inches (50.8 mm) below the surface of the indicator fluid, lid downward, one at a time (or in such a configuration that a single bubble from a single specimen out of a group under observation may be clearly observed as to its occurrence and source. The leak indicator fluid shall be maintained at a temperature of 125°C ±5°C (257°F ±9°F). The test specimens shall be observed against a dull non-reflective black background through the magnifier (see 7.2.3) from the instant of immersion until 20 seconds after immersion. Leaks will be identified by a single bubble or a stream of bubbles. Specimens from which a single bubble is observed is considered to be a reject.

8. TEST CONDITION F.

8.1 Materials.

8.1.1 Fluorocarbon liquid. The fluid used shall be FC-84 or D/80 fluorocarbon detector fluid.

8.2 Apparatus.

8.2.1 Chamber. A vacuum/pressure chamber capable of the evacuation and subsequent pressure bombing of devices up to 75 psig and maintaining pressure up to 12.5 hours.

8.2.2 Filter. A filtration system capable of removing particles greater than 1 micron in size from the fluorocarbon fluid.

8.2.3 Detector. A fluorocarbon vapor detection system with a nominal sensitivity of 10^{-5} atm cm^3/s. The sensitivity of the detector shall be better than 14 micrograms of FC84 or D/80. The detector shall have a linear response to 280 micrograms and a response time of better than 1 second.

8.2.4 Instruments. Suitable calibrated instruments to indicate that test, pressure times and temperatures are as specified. The detection system shall be calibrated using a calibration source of fluorocarbon at least once each shift to an accuracy of at least ±15 percent.

8.3 Precautions. The following precautions shall be observed in conducting the fluorocarbon gross leak test.

a. Fluorocarbons shall be filtered through a filter system capable of removing particles greater than 1 micrometer prior to use. Bulk filtering and storage is permissible. Liquid that has accumulated observable quantities of particulate matter during use shall be discarded or reclaimed by filtration for re-use. Precautions shall be taken to prevent contamination.

b. Precautions should be taken to prevent operator injury due to package rupture or violent evolution of bomb fluid when testing large packages.

8.4 Procedure. The devices shall be placed in a vacuum/pressure chamber and the pressure reduced to 5 torr or lower and maintained for 30 minutes minimum. A sufficient amount of FC-84 or D/80 detector fluid shall be admitted to the pressure chamber to completely cover the devices. The fluid shall be admitted after the 30 minute minimum vacuum period but before breaking the vacuum. The devices shall then be pressurized in accordance with table II. Upon completion of the pressurization period, the pressure shall be released and the devices removed from the pressure chamber without being removed from the detector fluid for more than 20 seconds. When the devices are removed from the fluid for testing, they shall be air dried for a minimum of 20 seconds and a maximum of 5 minutes prior to the test cycle. The devices shall then be tested with a fluorocarbon vapor detector in accordance with the system operating instructions and as follows. Devices shall be admitted to the purge chamber and purged (heated to remove any remaining surface fluorocarbon and to initiate vaporization of any internal fluorocarbon fluid). Purge time shall be in accordance with table III. Test time shall commence immediately after purge either in the same chamber (single chamber system) or an adjoining test chamber (dual chamber system). Test time shall be a minimum of 3.5 seconds (unless the device is rejected earlier) with the fluorocarbon vapor detector purge and test chambers at a temperature of 125°C ±5°C or 2.5 seconds minimum with the purge and test chambers at 150°C ±5°C. During test time, the amount of fluorocarbon outgassing is measured and the total integrated value is compared to the alarm level.

NOTE: Air dry, purge, and test time limits for each device shall be complied with in all cases, whether the device is handled individually or in plastic or metal tubes.

8.4.1 Failure criteria. A device shall be rejected if the detector instrumentation indicates more than 280 micrograms of fluorocarbon gas.

TABLE II. Test pressure and duration for condition F.

Test pressure	Duration
75 psig	.5 hr
60 psig	1.0 hr
30 psig	2.5 hr
15 psig	12.5 hr

TABLE III. Purge time for condition F.

Package with internal free volume (cm^3)	Purge time 1/ (seconds)
≤ 0.01	3 1/3-5
>0.01 ≤0.10	6-9
>0.10	8 2/3-13

1/ With purge chamber at 150°C, minimum and maximum purge times should be reduced by 1/3.

NOTE: If necessary, due to device construction or materials, maximum purge time can be determined by cycling a device with a 0.02 to 0.05 inch diameter hole and measuring the maximum time that can be used without permitting the device to escape detection during the test cycle.

9. Measurements. Upon completion of the test, measurements shall be made as specified.

10. Summary. The following details are to be specified in the individual specification.

a. Test condition letter (see 2.1).

(1) For test condition C.

(a) Procedure number and accept and reject leak rate.

(b) Backfilling pressure when verification of seal is required (see 5.3, 5.4.1 and 5.4.2).

(c) Number of pressure cycles if applicable (see 5.4.2).

(d) For procedure IV.

1. Reduced pressure of the chamber and duration of pressurization (see 5.4.4).

2. Whether perforation of specimen is required (see 5.4.4).

(e) For procedures III and IV.

1. Applicable gross leak conditions.

(2) For test conditions D and E.

(a) Test mounting fixtures (see 6.4 and 7.4).

1. Measurements after test (see 9).

CLASS 200

PHYSICAL-CHARACTERISTICS TESTS

METHOD 201A

VIBRATION

1. PURPOSE. The vibration test is used to determine the effects on component parts of vibration within the predominant frequency ranges and magnitudes that may be encountered during field service. Most vibration encountered in field service is not of a simple harmonic nature, but tests based on vibrations of this type have proved satisfactory for determining critical frequencies, modes of vibration and other data necessary for planning protective steps against the effects of undue vibration. Vibration, by causing loosening of parts or relative motion between parts in the specimen, can produce objectionable operating characteristics, noise, wear, and physical distortion, and often results in fatigue and failure of mechanical parts.

2. PROCEDURE. Prior to vibration, the specified tests or measurements shall be made. The specimens shall be mounted as specified using suitable mounting apparatus to assure that mounting is free from resonances over the test frequency range. The specimens shall be subjected to a simple harmonic motion having an amplitude of 0.03 inch (0.06 inch maximum total excursion), the frequency being varied uniformly between the approximate limits of 10 and 55 hertz (Hz). The entire frequency range, from 10 to 55 Hz and return to 10 Hz, shall be traversed in approximately 1 minute. Unless otherwise specified, this motion shall be applied for a period of 2 hours in each of 3 mutually perpendicular directions (total of 6 hours).1/ If applicable, this test shall be made under electrical-load conditions.

3. MEASUREMENTS. The specified measurements shall be made during and after vibration.

4. SUMMARY. The following details are to be specified in the individual specification:

a. Tests and measurements prior to vibration (see 2).

b. Method of mounting (see 2).

c. Duration of vibration, if other than that specified (see 2).

d. Direction of motion, if other than that specified (see 2).

e. Electrical-load conditions, if applicable (see 2).

f. Tests and measurements during and after vibration (see 3).

1/ In the previous issue of this method, test conditions A and B referred to a length of test of 5 hours and 2-1/2 hours, respectively.

METHOD 202D

SHOCK

(SPECIMENS WEIGHING NOT MORE THAN 4 POUNDS)
(CANCELED)

When method 202 is specified		Use test method 213		
Test condition	g (peak values)	Test condition	g (peak values)	Waveform
A	15g (pk)	K	30g (pk)	Sawtooth
B	30g (pk)	H	75g (pk)	Sawtooth
C	50g (pk)	I	100g (pk)	Sawtooth

METHOD 203C

RANDOM DROP

1. PURPOSE. The random-drop test is used to determine the effects on component parts of random, repeated impact due to handling, shipping, and other field service conditions. The test is an accelerated test designed to indicate structural and mechanical weaknesses of types not necessarily detected in shock and vibration tests.

2. APPARATUS. The random-drop test machine consists of an assembly of either two or four steel cages as shown on figure 203-2, with provisions for rotation about a common axis. The interior of each cage shall be as shown on figure 203-3. A typical 4-cage machine is shown on figure 203-1. Steel sleeves as shown on figure 203-4 shall be used to mount the specimen.

3. PROCEDURE. The specimen shall be rigidly mounted by the normal mounting means in the steel sleeve so that no part of the specimen, including terminals or external hardware of the component, will extend beyond the sleeve. When necessary, a suitable adapter may be used within the sleeve. End caps shall not be used on the sleeves. Through bolts may be employed as needed to mount the specimens in the sleeve. Only one sleeve shall be placed in each cage during test. The number of specimens mounted in each sleeve shall be limited only by the available space. Specimens shall be subjected to the random-drop test for a period of 45 minutes at a speed of four to six (4 – 6) revolutions per minute. The machine shall be rotated in the direction shown on figure 203-3.

4. MEASUREMENTS. Upon completion of the test, measurements shall be made as specified in the individual specification.

5. SUMMARY. The following detail shall be specified in the individual specification:

a. Measurements after test (see 4).

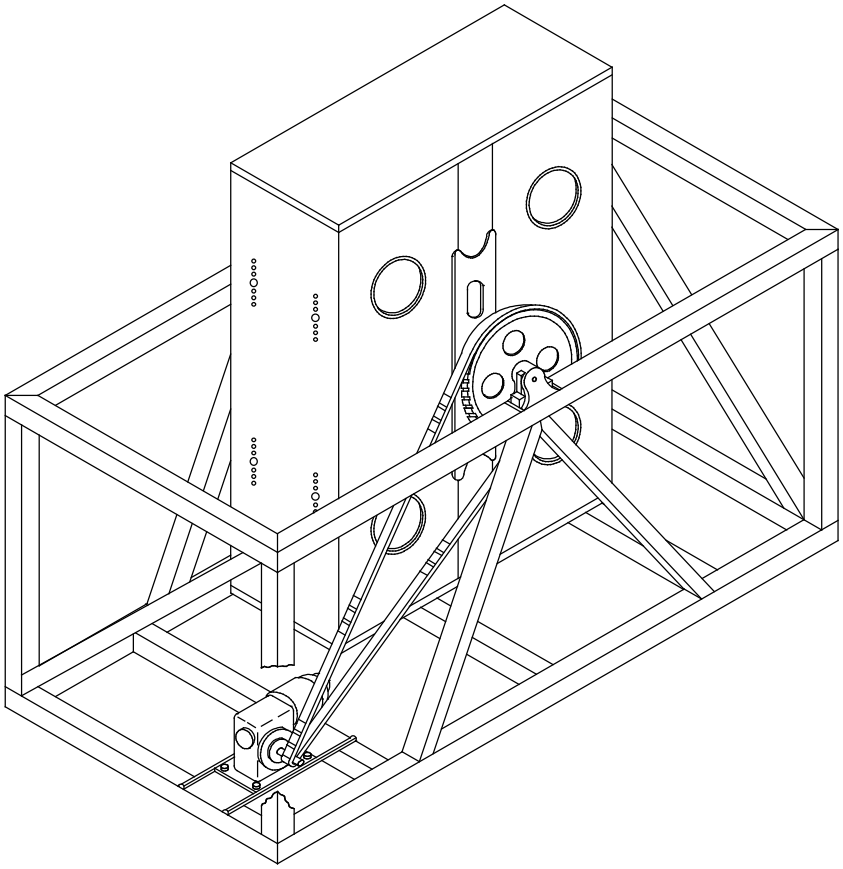

FIGURE 203-1. Typical assembly of four-cage random-drop-test machine.

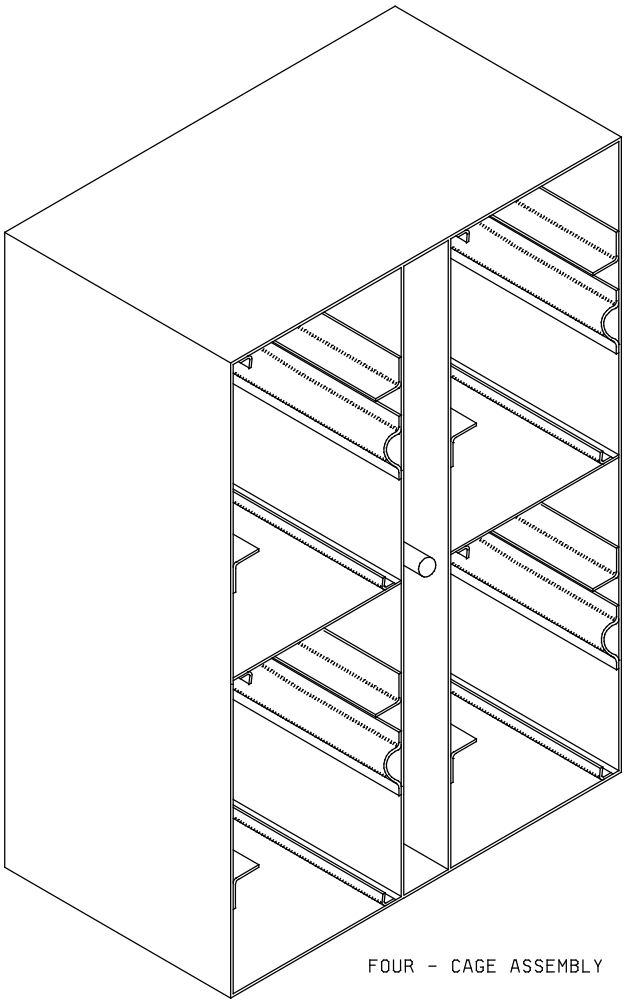

FIGURE 203-2. Cage assembly.

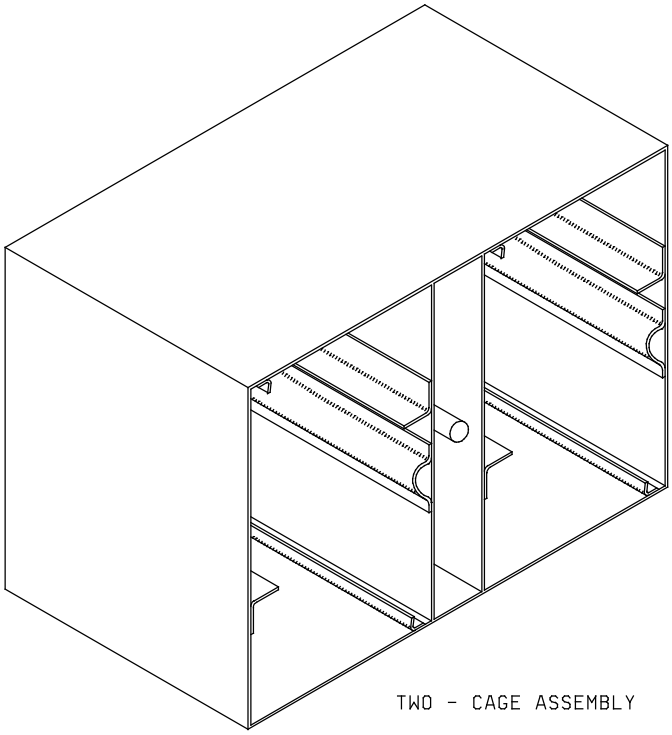

FIGURE 203-2. Cage assembly - Continued.

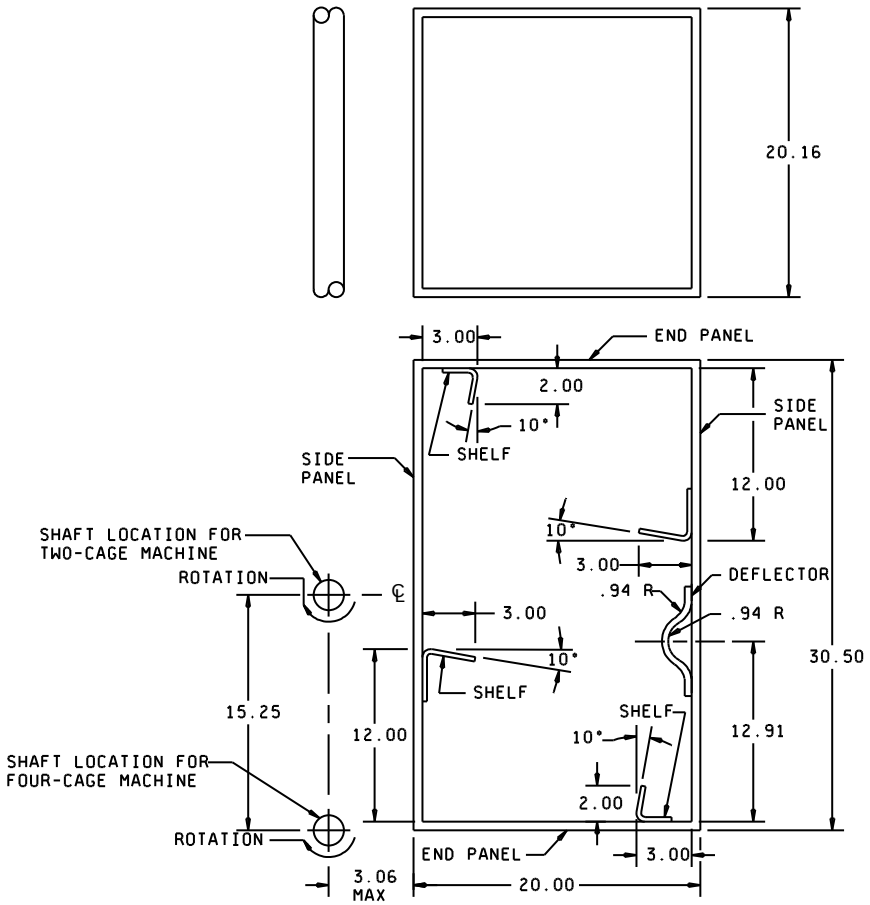

Inches	mm	Inches	mm	Inches	mm
.94	23.88	12.00	304.80	20.00	508.00
2.00	50.80	12.91	327.91	20.16	512.06
3.00	76.20	15.25	387.35	30.50	774.70
3.06	77.72				

NOTES:
1. Unless otherwise specified, tolerances are ±.06 (1.52 mm) on decimals and ±0° 30' on angles.
2. Material for end and side panels shall be steel .0747 (1.90 mm) nominal thickness.
3. Material for shelves and deflectors shall be steel .083 (2.11 mm) nominal thickness.

FIGURE 203-3. Cage (interior).

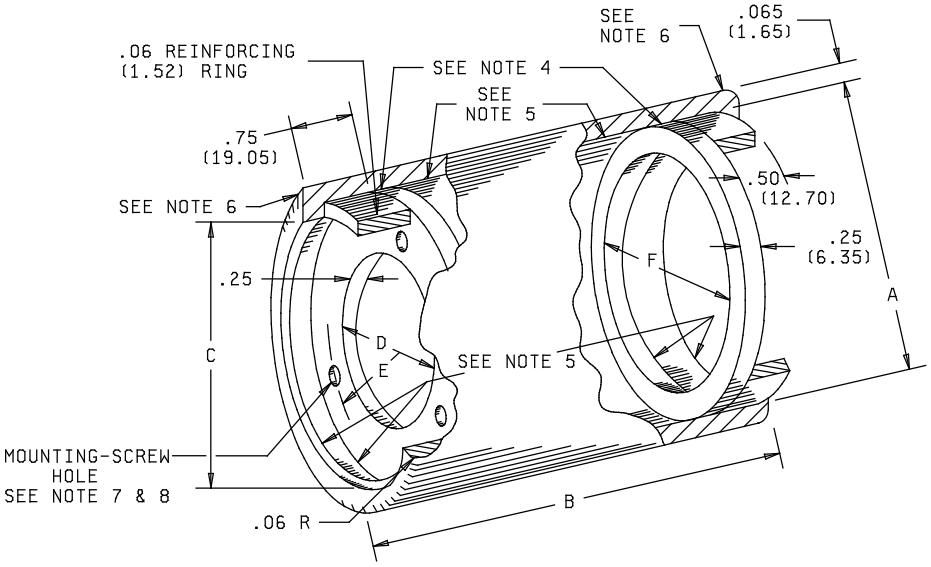

Dimensions					
A	B ±.06 (1.52)	C ±.06 (1.52)	D	E (Rad)	F ±.06 (1.52)
3.870 (98.30)	4.03 (102.36)	3.75 (95.25)	2.220 (56.39)	7/ 1.220 (30.99)	3.370 (85.60)
3.870 (98.30)	4.03 (102.36)	3.75 (95.25)	2.820 (71.63)	7/ 1.580 (40.13)	3.370 (85.60)
4.870 (123.70)	5.03 (127.76)	4.75 (120.65)	3.820 (97.03)	8/ 2.062 (52.37)	4.370 (111.00)

NOTES:

1. Dimensions are given in inches. Metric equivalents are in parentheses and are given for general information only.
2. Unless otherwise specified, tolerances are ±.005 inch (0.13 mm) for three place decimals, and ±.02 inch (0.51 mm) for two place decimals.
3. Material for sleeve and reinforcing rings shall be carbon steel, condition CWSR, grade MT1015 or 1015, conforming to ASTM A519.
4. Material shall be hot-rolled steel strip, annealed condition, annealed finish, conforming to QQ-S-698.
5. Silver solder all around. Silver solder shall conform to class 1 of QQ-B-654.
6. End of cylinder to be spun-over after insertion of reinforcing ring.
7. Radius of 3 holes equally spaced.
8. Radius of 6 holes equally spaced.

FIGURE 203-4. Sleeve.

METHOD 204D

VIBRATION, HIGH FREQUENCY

1. PURPOSE. The high frequency vibration test is performed for the purpose of determining the effect on component parts of vibration in the frequency ranges of 10 to 500 hertz (Hz), 10 to 2,000 Hz or 10 to 3,000 Hz, as may be encountered in aircraft, missiles, and tanks. The choice of test condition A, B, C, D, E, F, G, or H should be based on the frequency range and the vibration amplitude dictated by the applications of the component under consideration, and the state of the component part in relation to resistance-to-vibration damage.

2. PROCEDURE.

2.1 Mounting. The specimens shall be mounted as specified. For specimens with attached brackets, one of the vibration test directions shall be parallel to the mounting surface of the bracket. Vibration input shall be monitored on the mounting fixture in the proximity of the support points of the specimen.

2.2 Test condition A (10g peak). The specimens, while deenergized or operating under the load conditions specified, shall be subjected to the vibration amplitude, frequency range, and duration specified in 2.2.1, 2.2.2, and 2.2.3, respectively (see figure 204-1).

2.2.1 Amplitude. The specimens shall be subjected to a simple harmonic motion having an amplitude of either 0.06-inch double amplitude (maximum total excursion) or 10 gravity units (g peak), whichever is less. The tolerance on vibration amplitude shall be ±10 percent.

2.2.2 Frequency range. The vibration frequency shall be varied logarithmically between the approximate limits of 10 and 500 Hz (see 2.10), except that the procedure of method 201 of this standard may be applied during the 10 to 55 Hz band of the vibration frequency range.

2.2.3 Sweep time and duration. The entire frequency range of 10 to 500 Hz and return to 10 Hz shall be traversed in 15 minutes. This cycle shall be performed 12 times in each of three mutually perpendicular directions (total of 36 times), so that the motion shall be applied for a total period of approximately 9 hours. Interruptions are permitted provided the requirements for rate of change and test duration are met. Completion of cycling within any separate band is permissible before going to the next band. When the procedure of method 201 of this standard is used for the 10 to 55 Hz band, the duration of this portion shall be the same as the duration for this band using logarithmic cycling (approximately 1-1/3 hours in each of three mutually perpendicular directions).

2.3 Test condition B (15g peak). The specimens, while deenergized or operating under the load conditions specified, shall be subjected to the vibration amplitude, frequency range, and duration specified in 2.3.1, 2.3.2, and 2.3.3, respectively (see figure 204-1).

2.3.1 Amplitude. The specimens shall be subjected to a simple harmonic motion having an amplitude of either 0.06-inch double amplitude (maximum total excursion) or 15g (peak), whichever is less. The tolerance on vibration amplitude shall be ±10 percent.

2.3.2 Frequency range. The vibration frequency shall be varied logarithmically between the approximate limits of 10 to 2,000 Hz (see 2.10), except that the procedure of method 201 of this standard may be applied during the 10 to 55 Hz band of the vibration frequency range.

2.3.3 Sweep time and duration. The entire frequency range of 10 to 2,000 Hz and return to 10 Hz shall be traversed in 20 minutes. This cycle shall be performed 12 times in each of three mutually perpendicular directions (total of 36 times), so that the motion shall be applied for a total period of approximately 12 hours. Interruptions are permitted provided the requirements for rate of change and test duration are met. Completion of cycling within any separate band is permissible before going to the next band. When the procedure of method 201 of this standard is used for the 10 to 55 Hz band, the duration of this portion shall be the same as the duration for this band using logarithmic cycling (approximately 1-1/3 hours in each of three mutually perpendicular directions).

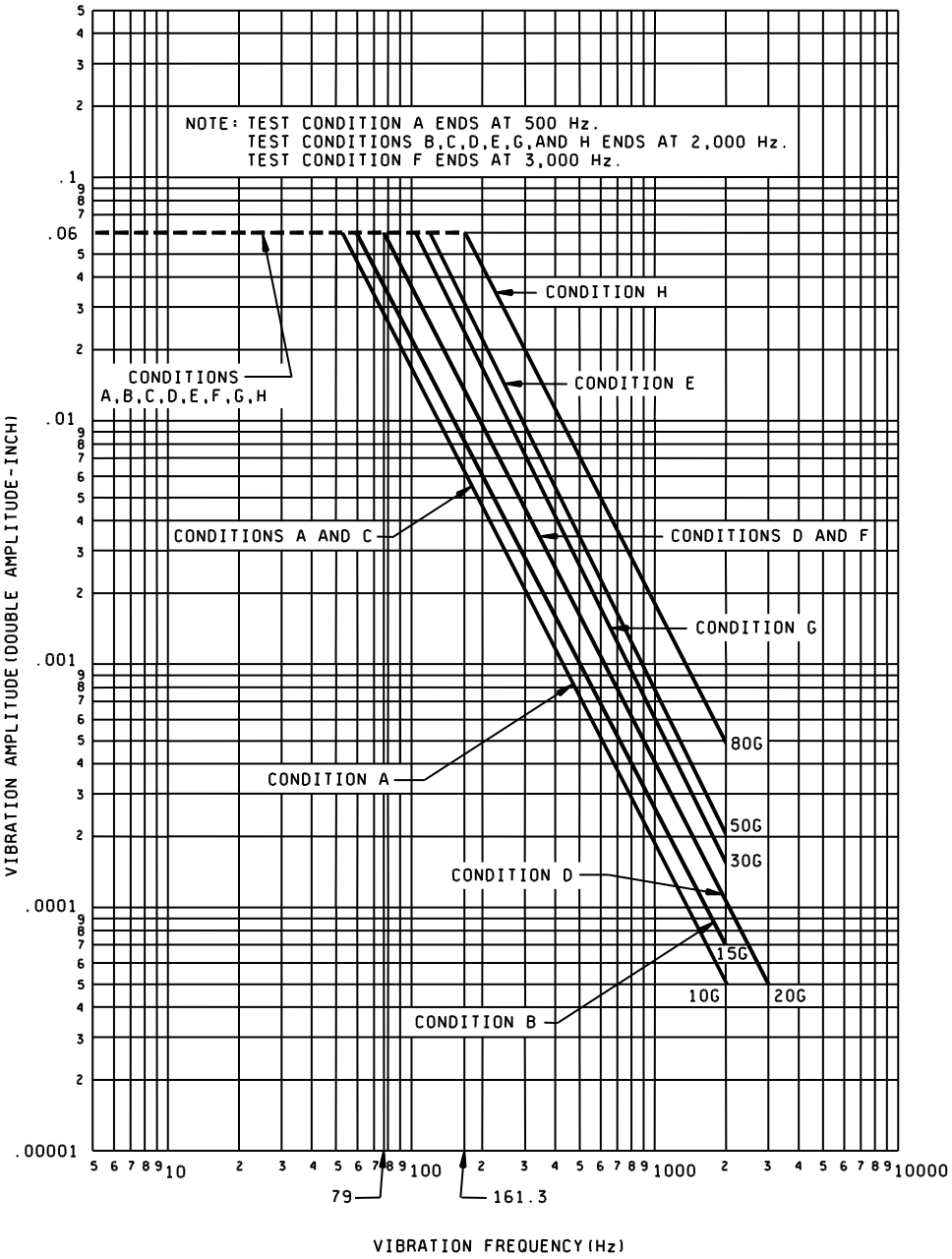

$G = .0512f^2DA$ (f = frequency in hertz, DA = double amplitude in inches.)

FIGURE 204-1. Vibration-test curves.

2.4 Test condition C (10g peak). The specimens, while de-energized or operating under the load conditions specified, shall be subjected to the vibration amplitude and frequency range shown on figure 204-1. The tolerance on vibration amplitude shall be ±10 percent.

2.4.1 Part 1. The specimens shall be tested in accordance with method 201 of this standard for 6 hours; 2 hours in each of three mutually perpendicular directions.

2.4.2 Part 2. The specimens shall be subjected to a simple harmonic motion having an amplitude varied to maintain a constant peak acceleration of 10g (peak), the frequency being varied logarithmically between the approximate limits of 55 and 2,000 Hz (see 2.10). The entire frequency range of 55 to 2,000 Hz (no return sweep) shall be traversed in 35 ±5 minutes, except that in the vicinity of what appears to be resonance, and in order to facilitate the establishment of a resonant frequency, the above rate may be decreased. If resonance is detected, specimens shall be vibrated for 5 minutes at each critical resonant frequency observed. This procedure shall be performed in each of three mutually perpendicular directions. Interruptions are permitted provided the requirements for rate of change and test duration are met.

2.4.3 Resonance. A critical resonant frequency is that frequency at which any point on the specimen is observed to have a maximum amplitude more than twice that of the support points. When specified, resonant frequencies shall be determined either by monitoring parameters such as contact opening, or by use of resonance-detecting instrumentation.

2.5 Test condition D (20g peak). The specimens, while de-energized or operating under the load conditions specified, shall be subjected to the vibration amplitude, frequency, range, and duration specified in 2.5.1, 2.5.2, and 2.5.3, respectively (see fig. 204-1).

2.5.1 Amplitude. The specimens shall be subjected to a simple harmonic motion having an amplitude of either 0.06-inch double amplitude (maximum total excursion) or 20g (peak), whichever is less. The tolerance on vibration amplitude shall be ±10 percent.

2.5.2 Frequency range. The vibration frequency shall be varied logarithmically between the approximate limits of 10 to 2,000 Hz (see 2.10), except that the procedure of method 201 of this standard may be applied during the 10 to 55 Hz band of the vibration frequency range.

2.5.3 Sweep time and duration. The entire frequency range of 10 to 2,000 Hz and return to 10 Hz shall be traversed in 20 minutes. This cycle shall be performed 12 times in each of three mutually perpendicular directions (total of 36 times), so that the motion shall be applied for a total period of approximately 12 hours. Interruptions are permitted provided the requirements for rate of change and test duration are met. Completion of cycling within any separate band is permissible before going to the next band. When the procedure of method 201 of this standard is used for the 10 to 55 Hz band, the duration of this portion shall be the same as the duration for this band using logarithmic cycling (approximately 1-1/3 hours in each of three mutually perpendicular directions).

2.6 Test condition E (50g peak). The specimens, while de-energized or operating under the load conditions specified, shall be subjected to the vibration amplitude, frequency, range, and duration specified in 2.6.1, 2.6.2, and 2.6.3, respectively (see figure 204-1).

2.6.1 Amplitude. The specimens shall be subjected to a simple harmonic motion having an amplitude of either 0.06-inch double amplitude (maximum total excursion) or 50g (peak), whichever is less. The tolerance on vibration amplitude shall be ±10 percent.

2.6.2 Frequency range. The vibration frequency shall be varied logarithmically between the approximate limits of 10 and 2,000 Hz (see 2.10), except that the procedure of method 201 of this standard may be applied during the 10 to 55 Hz band of the vibration frequency range.

2.6.3 Sweep time and duration. The entire frequency range of 10 to 2,000 Hz and return to 10 Hz shall be traversed in 20 minutes. This cycle shall be performed 12 times in each of three mutually perpendicular directions (total of 36 times), so that the motion shall be applied for a total period of approximately 12 hours. Interruptions are permitted provided the requirements for rate of change and test duration are met. Completion of cycling within any separate band is permissible before going to the next band. When the procedure of method 201 of this standard is used for the 10 to 55 Hz band, the duration of this portion shall be the same as the duration for this band using logarithmic cycling (approximately 1-1/3 hours in each of three mutually perpendicular directions).

2.7 Test condition F (20g peak). The specimens, while de-energized or operating under the load conditions specified, shall be subjected to the vibration amplitude, frequency range, and duration specified in 2.7.1, 2.7.2, and 2.7.3, respectively (see figure 204-1).

2.7.1 Amplitude. The specimens shall be subjected to a simple harmonic motion having an amplitude of either 0.06-inch double amplitude (maximum total excursion) or 20g (peak), whichever is less. The tolerance on vibration amplitude shall be ±10 percent.

2.7.2 Frequency range. The vibration frequency shall be varied logarithmically between the limits of 10 and 3,000 Hz (see 2.10), except that the procedure of method 201 of this standard may be applied during the 10 to 55 Hz band of the vibration frequency range.

2.7.3 Sweep time and duration. The entire frequency range of 10 to 3,000 Hz and return to 10 Hz shall be traversed in 20 minutes. This cycle shall be performed 12 times in each of three mutually perpendicular directions (total of 36 times), so that the motion shall be applied for a total period of approximately 12 hours. Interruptions are permitted provided the requirements for rate of change and test duration are met. Completion of cycling within any separate band is permissible before going to the next band. When the procedure of method 201 of this standard is used for the 10 to 55 Hz band, the duration of this portion shall be the same as the duration for this band using logarithmic cycling (approximately) 1-1/3 hours in each of three mutually perpendicular directions.

2.8 Test condition G (30g peak). The specimens, while deenergized or operating under the load conditions specified, shall be subjected to the vibration amplitude, frequency range, and duration specified in 2.8.1, 2.8.2, and 2.8.3, respectively (see figure 204-1).

2.8.1 Amplitude. The specimens shall be subjected to a simple harmonic motion having an amplitude of either 0.06-inch double amplitude (maximum total excursion) or 30g (peak), whichever is less. The tolerance on vibration amplitude shall be ±10 percent.

2.8.2 Frequency range. The vibration frequency shall be varied logarithmically between the limits of 10 and 2,000 Hz (see 2.10), except that the procedure of method 201 of this standard may be applied during the 10 to 55 Hz band of the vibration frequency range.

2.8.3 Sweep time and duration. The entire frequency range of 10 to 2,000 Hz and return to 10 Hz shall be traversed in 20 minutes. This cycle shall be performed 12 times in each of three mutually perpendicular directions (total of 36 times), so that the motion shall be applied for a total period of approximately 12 hours. Interruptions are permitted provided the requirements for rate of change and test duration are met. Completion of cycling within any separate band is permissible before going to the next band. When the procedure of method 201 of this standard is used for the 10 to 55 Hz band, the duration of this portion shall be the same as the duration for this band using logarithmic cycling (approximately) 1-1/3 hours in each of three mutually perpendicular directions.

2.9 Test condition H (80g peak). The specimens, while de-energized or operating under the load conditions specified, shall be subjected to the vibration amplitude, frequency range, and duration specified in 2.9.1, 2.9.2, and 2.9.3, respectively (see figure 204-1).

2.9.1 Amplitude. The specimens shall be subjected to a simple harmonic motion having a constant amplitude of either 0.06-inch double amplitude (maximum total excursion) or 80g (peak), whichever is less. The tolerance on vibration amplitude shall be ±10 percent.

2.9.2 Frequency range. The vibration frequency shall be varied logarithmically between the limits of 10 and 2,000 Hz (see 2.10), except that the procedure of method 201 of this standard may be applied during the 10 to 55 Hz band of the vibration frequency range.

2.9.3 Sweep time and duration. The entire frequency range of 10 to 2,000 Hz and return to 10 Hz shall be traversed in 20 minutes. This cycle shall be performed 12 times in each of three mutually perpendicular directions (total of 36 times), so that the motion shall be applied for a total period of approximately 12 hours. Interruptions are permitted provided the requirements for rate of change and test duration are met. Completion of cycling within any separate band is permissible before going to the next band. When the procedure of method 201 of this standard is used for the 10 to 55 Hz band, the duration of this portion shall be the same as the duration for this band using logarithmic cycling (approximately) 1-1/3 hours in each of three mutually perpendicular directions.

2.10 Alternate procedure for use of linear in place of logarithmic change of frequency. Linear rate of change of frequency is permissible under the following conditions:

a. The frequency range above 55 Hz shall be subdivided into not less than three bands. The ratio of the maximum frequency to the minimum frequency in each band shall be not less than two.

b. The rate of change of frequency in hertz per minute (Hz/min) shall be constant for any one band.

c. The ratios of the rate of change of frequency of each band to the maximum frequency of that band shall be approximately equal.

2.10.1 Example of alternate procedure. As an example of the computation of rates of change, assume that the frequency spectrum has been divided into three bands, 55 to 125 Hz, 125 to 500 Hz, and 500 to 2,000 Hz, in accordance with 2.10a. Let the (constant) ratio of rate of frequency change in Hz/min, to maximum frequency in Hz be k for each band. Then the rates of change for the three bands will be 125k, 500k, and 2,000k, respectively. The times, in minutes, to traverse the three frequency bands will therefore be respectively:

$$\frac{125-55}{55k}, \frac{500-125}{500k}, \frac{2000-500}{2{,}000k}$$

Since the minimum total sweep time is 30 minutes,

$$30 = \frac{70}{125k} + \frac{375}{500k} + \frac{1{,}500}{2{,}000k}$$

from which: k = 0.0687

The required maximum constant rates of frequency change for the three bands are therefore 8.54, 34.4, and 136.6 Hz/min, respectively. The minimum times of traverse of the bands are 8.2, 10.9, and 10.9 minutes, respectively.

3. MEASUREMENTS. Measurements shall be made as specified.

4. SUMMARY. The following details are to be specified in the individual specification:

   a. Mounting of specimens (see 2.1).

   b. Electrical-load conditions, if applicable (see 2.2, 2.3, 2.4, 2.5, 2.6, 2.7, 2.8, and 2.9).

   c. Test condition letter (see figure 204-1).

   d. Method of determining resonance, if applicable (see 2.4.3).

   e. Measurements (see 3).

METHOD 205E

SHOCK, MEDIUM IMPACT
(CANCELED)

When method 205 is specified		Use test method 213		
Test condition	g (peak values)	Test condition	g (peak values)	Waveform
A	15g (pk)	K	30g (pk)	Sawtooth
B	30g (pk)	H	75g (pk)	Sawtooth
C	50g (pk)	I	100g (pk)	Sawtooth

METHOD 206

LIFE (ROTATIONAL)

1. PURPOSE. This test is performed for the purpose of determining the effects of subjecting electronic and electrical parts, which are actuated by rotational motion, to a number of operations approximating the life of the part. Total resistance, contact resistance, and dielectric strength are samples of measurements which may be made prior to, during, or after test, and which would show the effects of rotational actuation. Measurements prior to and after test are generally made for comparison purposes and would indicate the amount of change that results from this test. Parts with sealed shafts and bushings might have the effectiveness of the seal disturbed by rotation; a sealing test performed after this test would disclose this inadequacy. A switch-life test may be performed in conjunction with this test method.

2. PROCEDURE.

2.1 Mounting. Specimens shall be mounted in their normal operating position by the intended means. Normal care shall be taken in the mounting procedure to prevent the binding of shafts during rotation. Figure 206-1 shows a suggested means of preventing this condition, when applicable. Mechanisms such as slip clutches may be used to prevent damage from the application of excessive torque to the specimens. When this test is conducted at an elevated temperature (see 2.6), the spacing between a group of like specimens shall be as specified.

2.2 Test potential and load. The test potential and load applied to the specimens during rotation shall be as specified.

2.3 Cycle. A cycle shall consist of a rotation of the shaft from one stop position to the other stop position (passing through detent positions, if any), and return to the original position. For specimens not having stops, a cycle shall consist of a rotation of the shaft 360° and return, unless otherwise specified. Specimens with adjustable stops shall have the stops so placed as to permit maximum rotation. Specimens that are rotated by means other than a shaft shall meet the requirements of this paragraph by rotation 360° and return, unless otherwise specified, or from stop to stop.

2.4 Cycle rate. The cycle rate shall be expressed in cycles per minute (cpm), and shall be as specified.

2.5 Number of cycles. Specimens shall be subjected to one of the following test conditions, as specified:

Test condition	Number of cycles
A	500
B	2,000
C	5,000
D	10,000
E	15,000
F	25,000
G	50,000
H	100,000
J	200,000
K	300,000
L	500,000
M	1,000,000
N	2,000,000

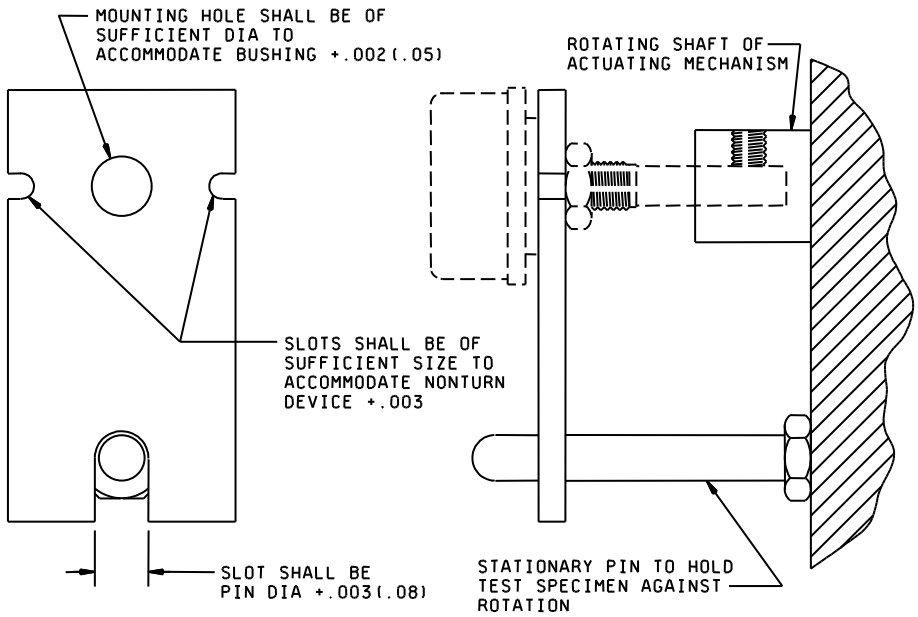

NOTES:
1. Dimensions are in inches.
2. Metric equivalents are in parentheses and are given for general information only.

FIGURE 206-1. Suggested mounting fixture for rotational-life test.

2.6 Temperature and atmospheric pressure. When specified, this test shall be performed at elevated or reduced temperature and at other than room ambient atmospheric pressure.

3. MEASUREMENTS. Specified measurements or tests shall be made prior to, during, or after rotations, as specified.

4. SUMMARY. The following details are to be specified in the individual specification:

a. Spacing of specimens for elevated-temperature testing, when applicable (see 2.1).

b. Test potential and load (see 2.2).

c. Cycle, if other than specified (see 2.3).

d. Cycle rate in cpm (see 2.4).

e. Test condition letter (see 2.5).

f. Temperature and atmospheric conditions, when applicable (see 2.6).

g. Measurements or tests prior to, during, or after rotations, as applicable (see 3).

METHOD 207B

HIGH-IMPACT SHOCK

1. PURPOSE. This test is performed for the purpose of determining the ability of various parts to withstand shock of the same severity as that produced by underwater explosions, collision impacts, near-miss gunfire, blasts caused by air explosions, and field conditions. Exact simulation of some of the severe shock motions experienced in the field is difficult to reproduce; however, parts that successfully complete the test of this method have been found to possess the necessary ruggedness for this use. The test apparatus utilized in this method is the same as that designated as Shock Testing Machine for Lightweight Equipment in MIL-S-901, Shock Tests, HI (High-Impact), Shipboard Machinery, Equipment and Systems, Requirements for. The purpose of this apparatus is to determine the ability of equipment installed aboard naval ships to withstand shock and still continue to perform its operational function. This test method is limited to testing of parts weighing not more than 300 pounds.

2. PRECAUTIONS. The apparatus shall be examined periodically for damage. Any hardware that has become defective by being deformed or cracked shall be replaced. Particular attention shall be given to the anvil plate which shall not be bowed more than 1 inch at the center. Proper safeguards shall be taken to protect personnel from objects that may become loosened and act as projectiles as a result of this test. A sound-warning arrangement shall be made, for use in alerting personnel in the vicinity of the test of the impending drop of the hammer.

3. APPARATUS. The apparatus used in this test method shall be as shown on figure 207-1 and the associated detail drawings. The parts shall be installed on a mounting fixture which is attached to the anvil plate of the shock-testing apparatus. A 400-pound hammer shall be dropped from a specified height (see 4.4) onto a shock pad located on the anvil plate. The shock motion is then transmitted by the anvil plate to the parts attached on the mounting fixture.

3.1 Anvil plate. The test apparatus of this method is so constructed that the anvil plate (see figure 207-3) can be installed, in sequence, in two positions. By utilizing these two installation positions and separately employing both hammers of the apparatus shock is applied through the three principal mutually perpendicular axes of the part being subjected to test. One position is to locate the anvil in such a manner that it will receive blows through the back of the anvil plate by contact from the horizontal hammer, and blows on the top shock pad of the anvil plate by a drop of the vertical hammer as shown on figure 207-2. The other position is as shown on figure 207-1, whereby the end shock pad is contacted by the horizontal hammer.

3.2 Hammers. The test apparatus is equipped with two 400-pound hammers. One hammer renders a blow by a vertical drop. The other hammer applies a force in a horizontal direction. In this manner, and by changing the orientation of the anvil plate, blows may be delivered to the anvil and the parts in three directions.

3.3 Mounting fixtures. Figure 207-4A, figure 207-4B, figure 207-5, and figure 207-6 show standard mounting fixtures that shall be used when testing parts with this test apparatus. These mounting fixtures simulate platform and panel mountings. The applicable mounting fixture shall be as specified. When one of the standard mounting fixtures shown on figure 207-4A, figure 207-4B, figure 207-5, and figure 207-6 cannot be used, the individual specification shall specify a mounting fixture or adapter which approximates the actual rigidity encountered in service.

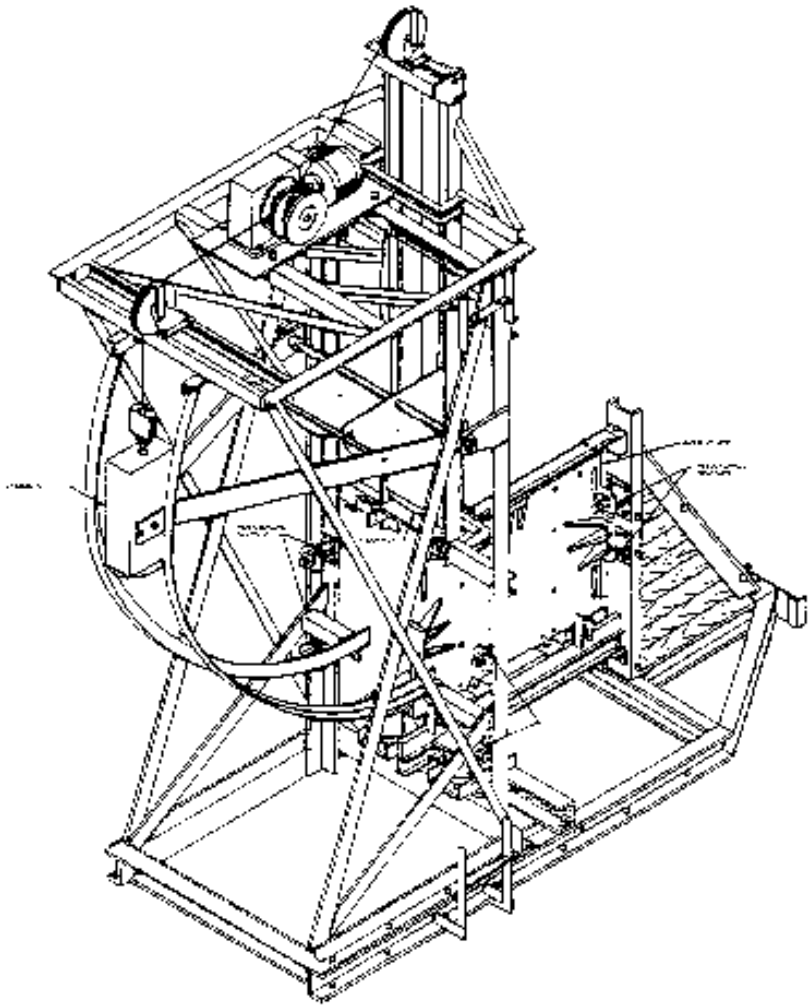

FIGURE 207-1. High-impact shock-testing apparatus.

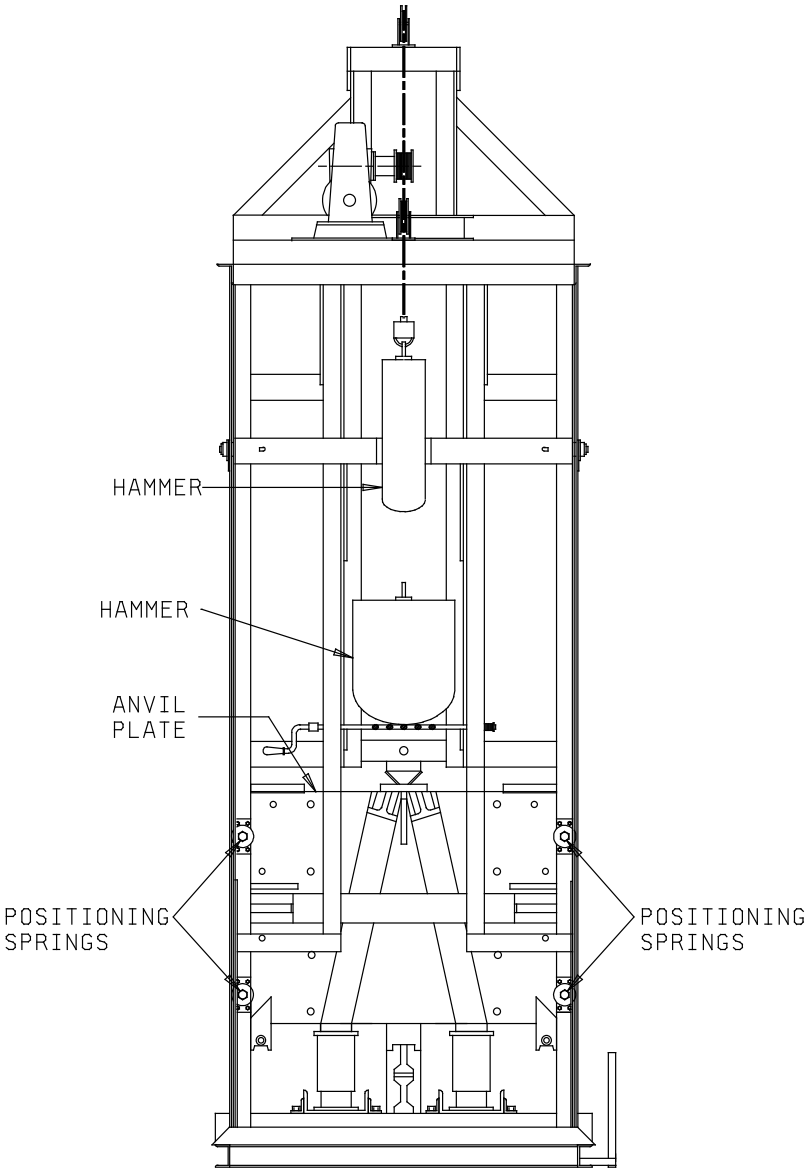

FIGURE 207-2. High-impact shock-testing apparatus (backview) with anvil plate located for back and top blows.

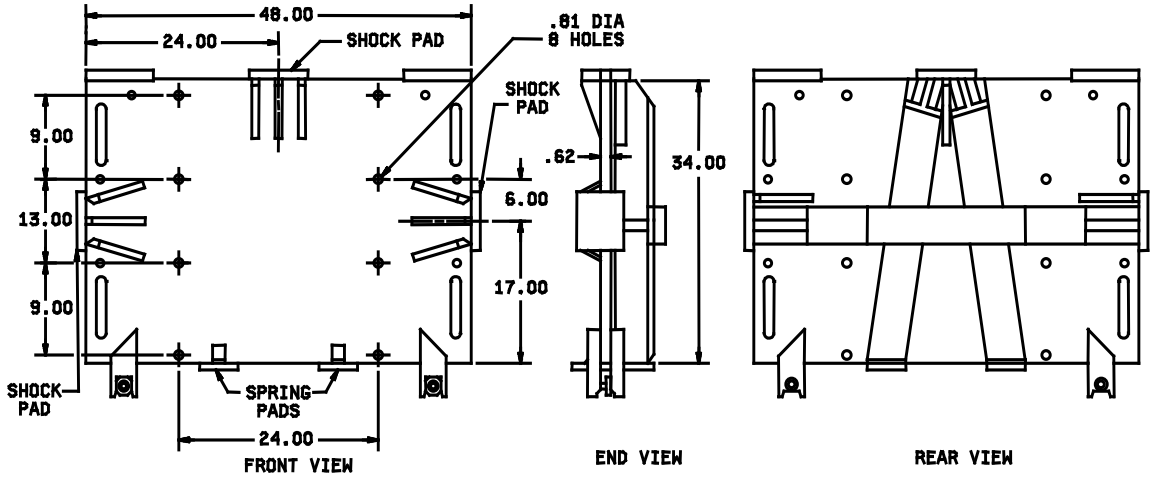

Inches	mm	Inches	mm
.62	15.75	17.00	431.80
.81	20.57	24.00	609.60
6.00	152.40	34.00	863.60
9.00	228.60	48.00	1,219.20
13.00	330.20		

NOTE: Unless otherwise specified, tolerances are ±.06 (1.52 mm).

FIGURE 207-3. Anvil plate of shock-testing apparatus.

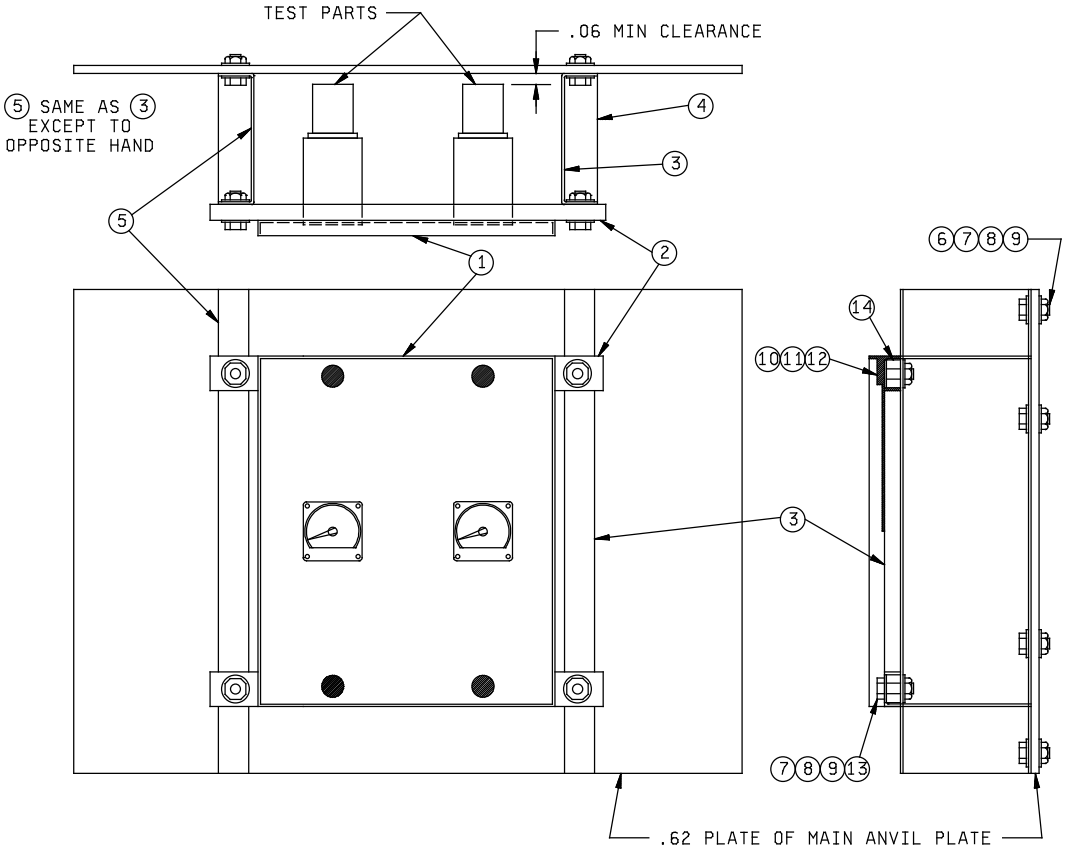

FIGURE 207-4A. Standard mounting fixtures for electrical-indicating switchboard meters and other panel-mounted parts.

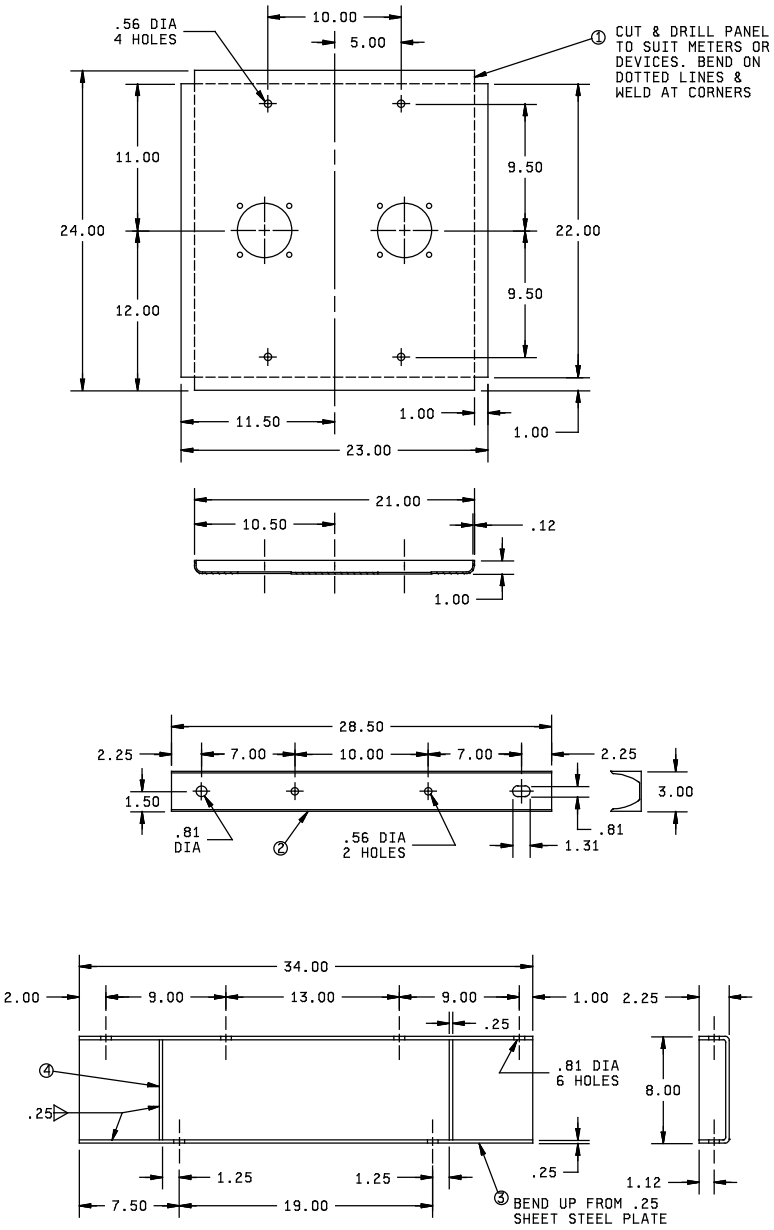

FIGURE 207-4A. Standard mounting fixtures for electrical-indicating switchboard meters and other panel-mounted parts - Continued.

Item	Description	Material	Quantity 1/
1	Panel	Steel	1
2	Standard channel, 3 x 5 pound	Steel	2
3	Fabricated spacer	Steel	1
4	Spacer stiffener	Steel	4
5	Fabricated spacer	Steel	1
6	Hex head bolt, .750-10UNC-2A x 1.75 lg	Steel	1
7	Hex head nut, .750-10UNC-2B	Steel	12
8	Washer, 2.00 OD x .81 ID	Steel	12
9	Washer, 1.38 OD x .81 ID	Steel	12
10	Hex head bolt, .500-13UNC-2A x 1.00 lg	Steel	4
11	Hex head nut, .500-13UNC-2B	Steel	4
12	Washer, 1.38 OD x .56 ID	Steel	4
13	Hex head bolt, .750-10UNC-2A x 2.50 lg	Steel	4
14	Block, 2.25 x 2.00 x 1.25	Steel	4

1/ Quantities are for one mounting.

Inches	mm	Inches	mm	Inches	mm	Inches	mm
.06	1.52	1.31	33.27	7.00	177.80	12.00	304.80
.12	3.05	1.38	35.05	7.50	190.50	13.00	330.20
.25	6.35	1.50	38.10	8.00	203.20	19.00	482.60
.56	14.22	1.75	44.45	9.00	228.60	21.00	533.40
.62	15.75	2.00	50.80	9.50	241.30	22.00	558.80
.81	20.57	2.25	57.15	10.00	254.00	23.00	584.20
1.00	25.40	2.50	63.50	10.50	266.70	24.00	609.60
1.12	28.45	3.00	76.20	11.00	279.40	28.50	722.90
1.25	31.75	5.00	127.00	11.50	292.10	34.00	863.60

NOTES:

1. Unless otherwise specified, tolerance is ±.06 (1.52 mm).
2. Two identical specimens shall be mounted on the panel provided there is a minimum separation of 3.00 inches (76.20 mm) when the indicated 10.00 inches (254.00 mm) centers are used (total weight not to exceed 40 pounds).
3. In the event that the requirement of note 2 can be met, but is desired to test only one specimen, a counterbalance of approximately the same weight shall be mounted in a corresponding position on the opposite side of the panel. Mounting dimensions for the counterbalance shall be the same as for the specimen.
4. In the event that the requirement of note 2 cannot be met, the specimen shall be mounted centrally on the panel; if the individual specimen weight is in excess of 20 pounds, the panel shall be reinforced as indicated on figure 207-4B.
5. Specimens too large to be tested on this panel shall utilize the panel indicated on figure 207-4B.
6. If the depth of the specimen is such that the minimum clearance of 1.00 inch (25.40 mm) cannot be maintained, the specimen shall be turned around so that the front faces the anvil plate.

FIGURE 207-4A. Standard mounting fixtures for electrical-indicating switchboard meters and other panel-mounted parts - Continued.

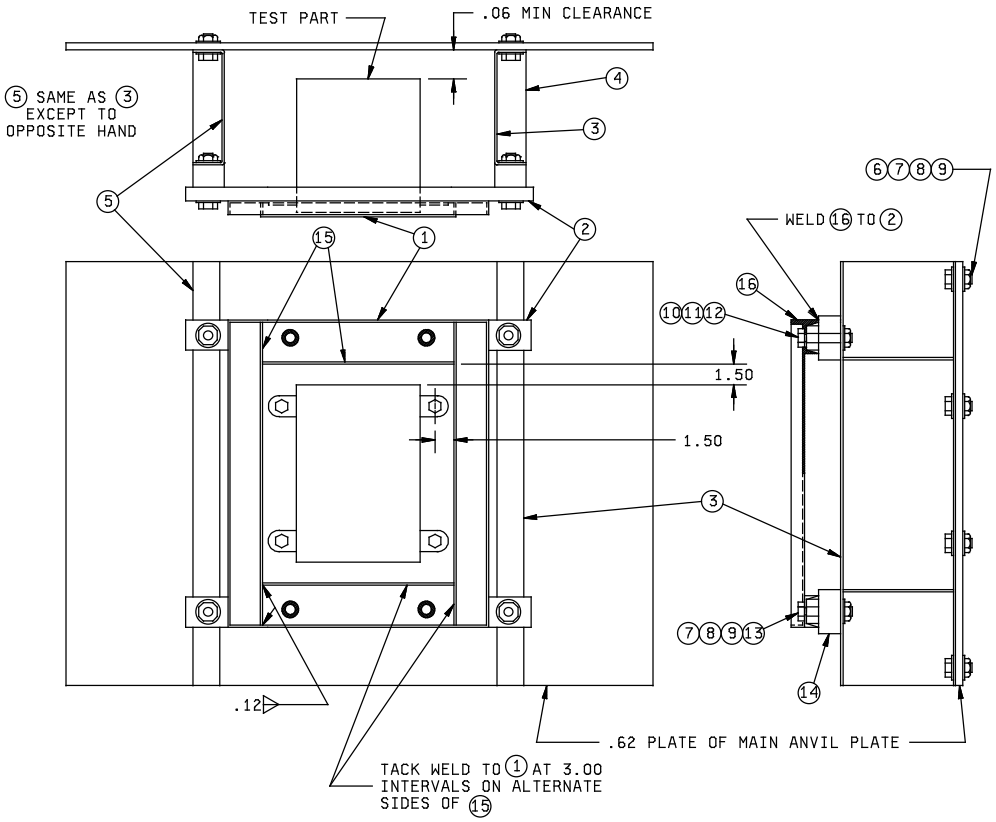

FIGURE 207-4B. Standard mounting fixtures for electrical-indicating switchboard meters and other panel-mounted parts.

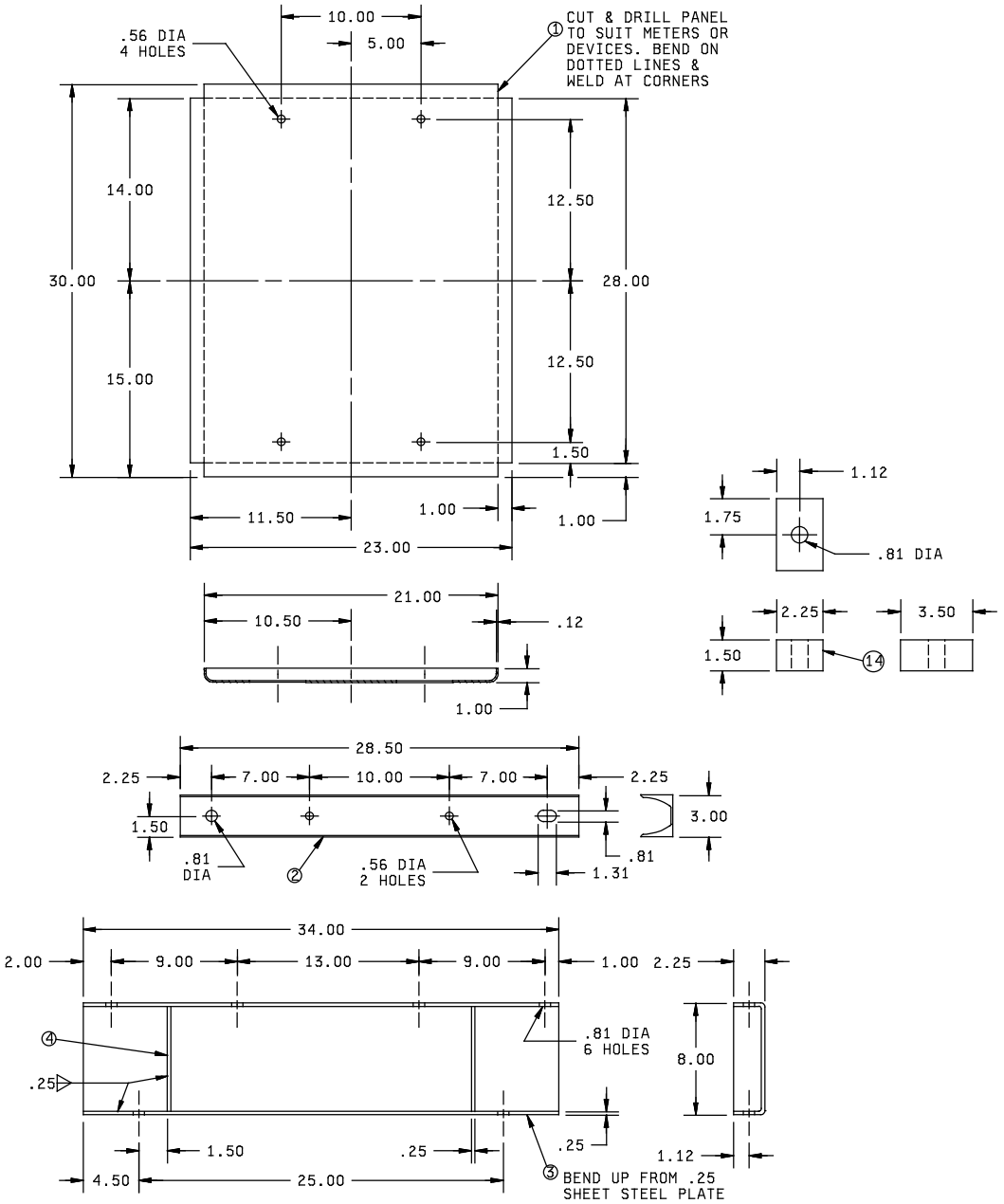

FIGURE 207-4B. Standard mounting fixtures for electrical-indicating switchboard meters and other panel-mounted parts - Continued.

Item	Description	Material	Quantity 1/
1	Panel	Steel	1
2	Standard channel, 3 x 5 pound	Steel	2
3	Fabricated spacer	Steel	1
4	Spacer stiffener	Steel	4
5	Fabricated spacer	Steel	1
6	Hex head bolt, .750-10UNC-2A x .75 lg	Steel	8
7	Hex head nut, .750-10UNC-2B	Steel	12
8	Washer, 2.00 OD x .18 ID	Steel	12
9	Washer, 1.38 OD x .18 ID	Steel	12
10	Hex head bolt, .500-13UNC-2A x 1.00 lg	Steel	4
11	Hex head nut, .500-13UNC-2B	Steel	4
12	Washer, 1.38 OD x .56 ID	Steel	4
13	Hex head bolt, .750-10UNC-2A x 4.00 lg	Steel	4
14	Spacer block	Steel	4
15	Strap, .12 x 1.00	Steel	4
16	Block, 2.25 x 21.25	Steel	4

1/ Quantities are for one mounting.

Inches	mm	Inches	mm	Inches	mm	Inches	mm
.06	1.52	1.12	28.45	4.00	101.60	12.50	317.50
.12	3.05	1.31	33.27	4.50	114.30	13.00	330.20
.18	4.57	1.38	35.05	5.00	127.00	14.00	355.60
.25	6.35	1.50	38.10	7.00	177.80	15.00	381.00
.56	14.22	1.75	44.45	8.00	203.20	21.00	533.40
.62	15.75	2.00	50.80	9.00	228.60	21.25	539.75
.75	19.05	2.25	57.15	10.00	254.00	23.00	584.20
.81	20.57	3.00	76.20	10.50	266.70	25.00	635.00
1.00	25.40	3.50	88.90	11.50	292.10	28.00	710.20
						30.00	762.00
						34.00	863.60

NOTES:
1. Unless otherwise specified, tolerance is ±.06 (1.52 mm).
2. This panel shall not be used if the panel indicated on figure 207-4A is applicable.
3. The spacer blocks, item 14, shall be used only when necessary to maintain a minimum clearance of 1.00 inch (25.40 mm) between the specimen and the anvil plate.
4. In the event that the depth of the specimen is such that the minimum clearance of 1.00 inch (25.40 mm) cannot be maintained, the spacer blocks shall be removed and the specimen mounted with the front surface toward the anvil plate.

FIGURE 207-4B. Standard mounting fixtures for electrical-indicating switchboard meters and other panel-mounted parts - Continued.

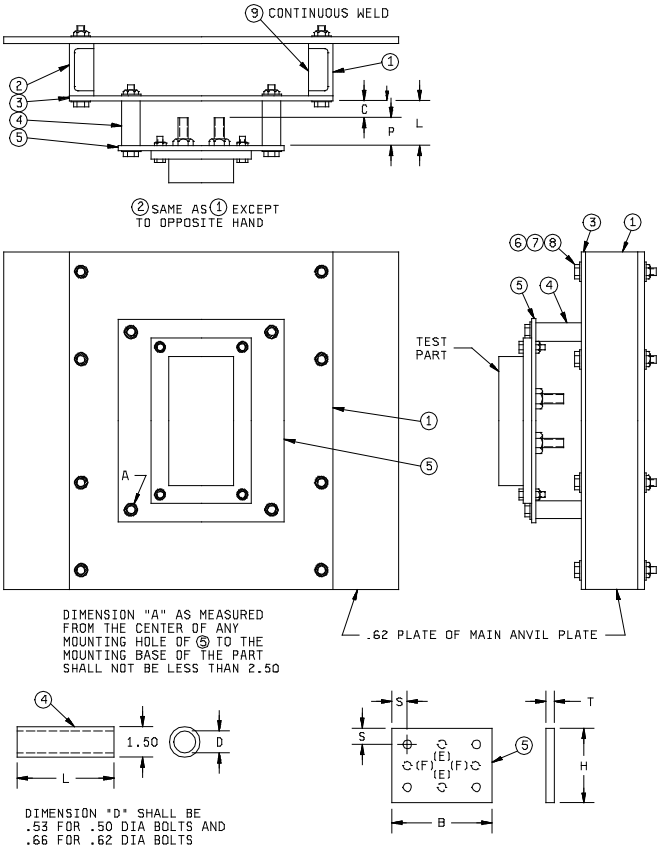

Inches	mm
.18	4.57
.50	12.70
.53	13.46
.62	15.75
.66	16.76
1.00	25.40
1.50	38.10
1.94	49.28
2.00	50.80
2.50	63.50
7.00	177.80
27.00	685.80
34.00	863.60
36.00	914.40

Item	Description	Material	Quantity 1/
1	Car building channel, 4 x 13.8 pounds	Steel	1
2	Car building channel, 4 x 13.8 pounds	Steel	1
2/ 3	Auxiliary mounting plate, .50 x 27.00 x 34.00	Steel	1
4	Spacer (see table 1)	Steel	
5	Plastic mounting panel (see table 2)	Plastic, laminated, type FBG, in accordance with MIL-I-24768/14	
6	Hex head bolt; .750-10UNC-2A x 7.00 lg	Steel (heat-treated)	8
7	Hex head nut, .750-10UNC-2B	Steel	8
8	Washer, 2.00 OD x .18 ID	Steel	16
9	Pipe spacer, 1.00 standard, 1.94 lg	Steel	8

1/ Quantities are for one mounting.
2/ The size of the auxiliary mounting plate shall be increased to .50 x 36.00 x 34.00 for panels No. 5 and No. 6 listed in table II.

FIGURE 207-5. Standard mounting fixtures for electrical controller parts (contractors, relays, resistors, etc.).

Holes (E) are drilled equidistant from corner holes on same center line - panels No. 5 and No. 6 only. Holes (F) are drilled equidistant from corner holes on same center line - panels No. 4 and No. 6 only.

TABLE I. Spacers.

When P (note assembly plan view) is:		L	Remarks
Less than	Greater than		
.75 (19.05)		1.50 (38.10)	
3.25 (82.55)	.75 (19.05)	P + .75	
	3.25 (82.55)	4.00 (101.60)	Cut out .50 inch (12.70 mm) thick auxiliary mounting plate, item 3, to give .75 inch clearance around rear projections.

Selection of panel size: The panel employed shall be the smallest size shown in the above table that will result in a clearance, "A" (note assembly front elevation view), of at least 2.50.

TABLE II. Mounting panels.

Panel number	B	H	T	S	Size of bolts	Bolt-hole diameter	Quantity
1	9.00 (228.60)	12.00 (304.80)	.75 (19.05)	1.00 (25.40)	.500-13UNC-2A	.56 (14.22)	4
2	12.00 (304.80)	16.00 (406.40)	1.00 (25.40)	1.00 (25.40)	.500-13UNC-2A	.56 (14.22)	4
3	16.00 (406.40)	20.00 (508.00)	1.00 (25.40)	1.00 (25.40)	.500-13UNC-2A	.56 (14.22)	4
4	20.00 (508.00)	24.00 (609.60)	1.00 (25.40)	1.00 (25.40)	.500-13UNC-2A	.56 (14.22)	6
5	32.00 (812.80)	24.00 (609.60)	1.00 (25.40)	1.25 (31.75)	.625-11UNC-2A	.69 (17.53)	6
6	36.00 (914.40)	34.00 (863.60)	1.00 (25.40)	1.25 (31.75)	.625-11UNC-2A	.69 (17.53)	8

NOTES:
1. Metric equivalents are in parentheses.
2. Unless otherwise specified, tolerances are ±.06 inch (1.52 mm).

FIGURE 207-5. Standard mounting fixtures for electrical controller parts (contractors, relays, resistors, etc.) - Continued.

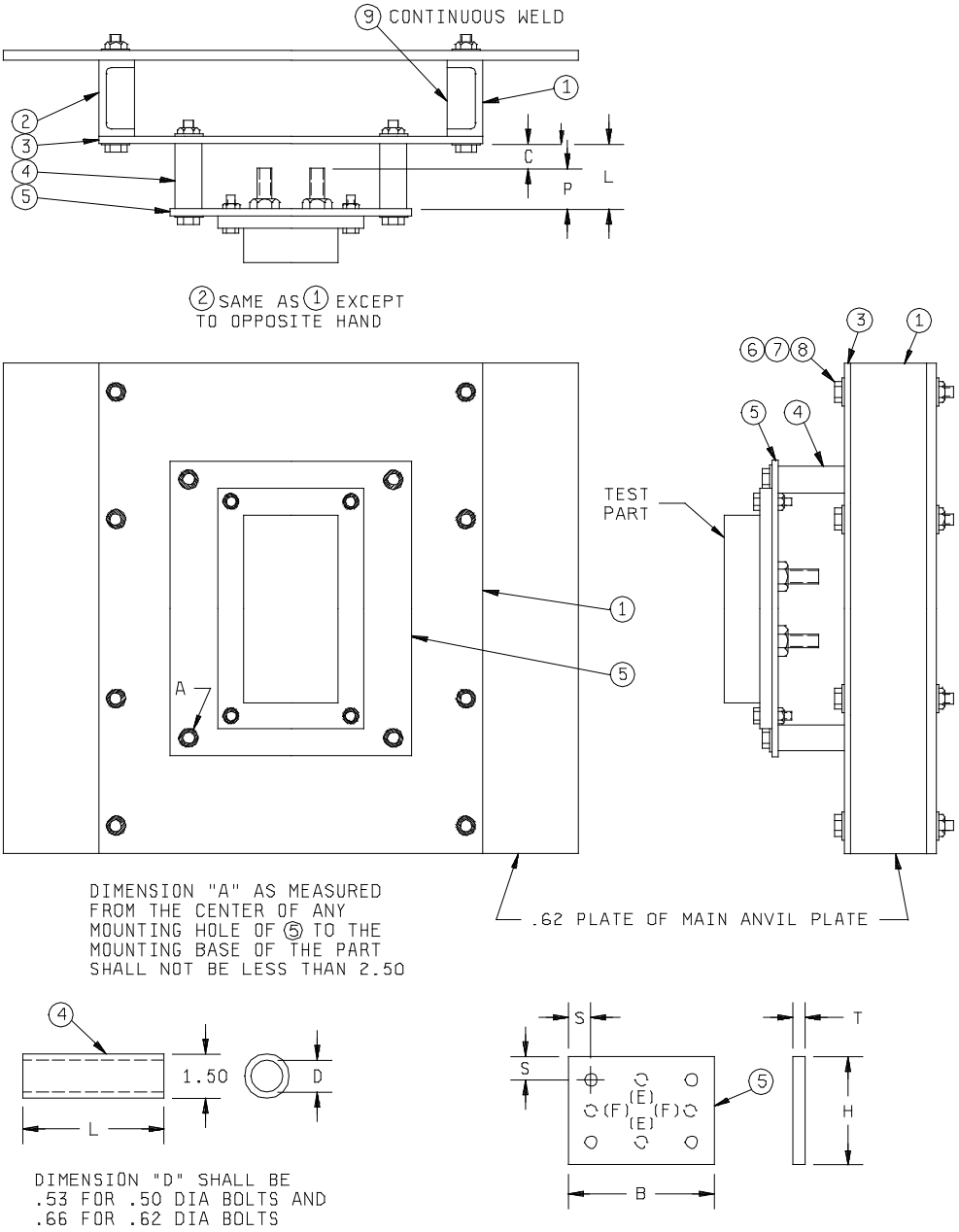

FIGURE 207-6. Standard mounting fixtures for deck, or platform, mounted parts.

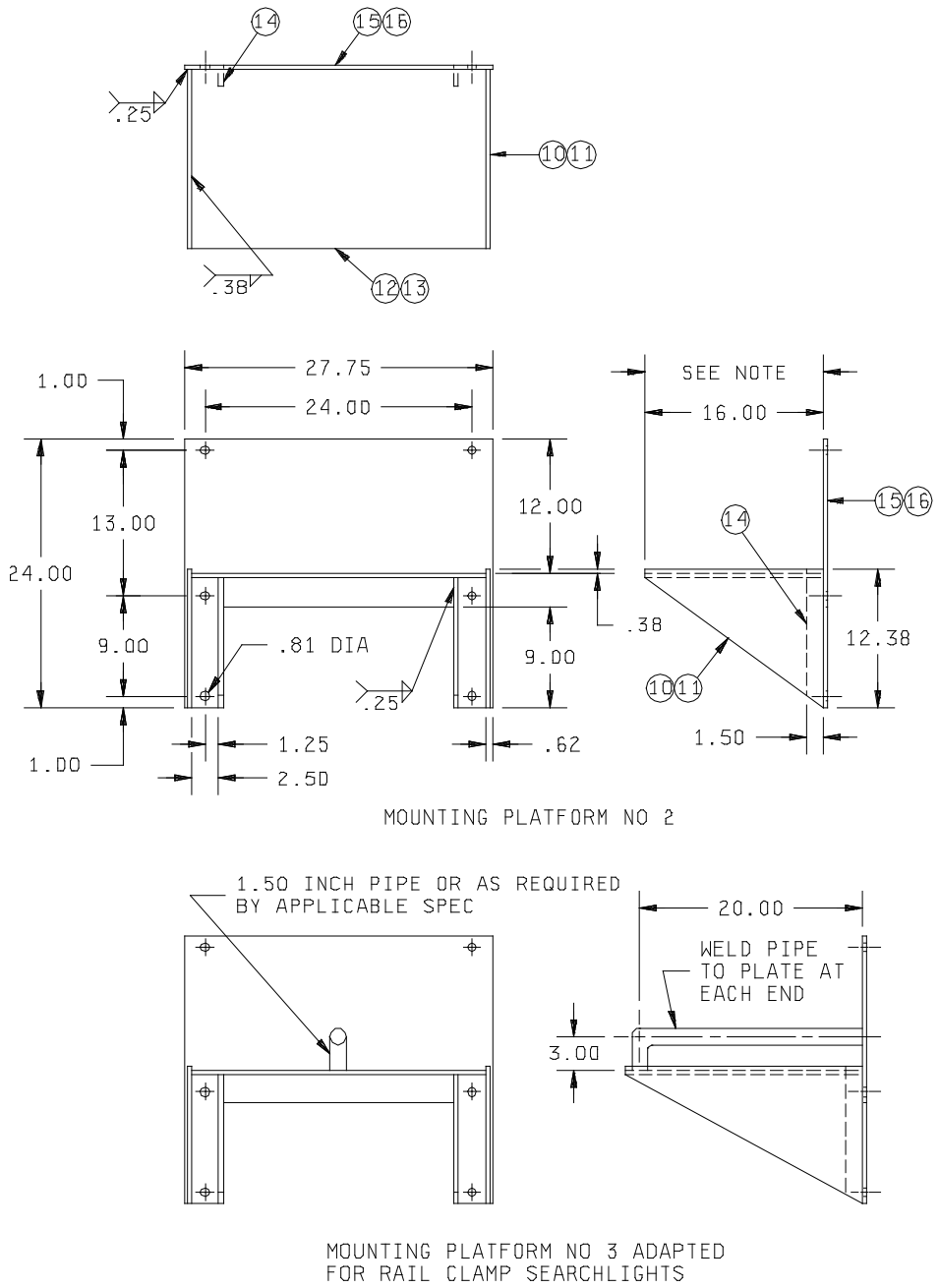

FIGURE 207-6. Standard mounting-fixtures for deck or platform mounted parts - Continued.

Item	Description	Material	Quantity 1/
1	Car building channel, 4 x 13.8 lb	Steel	1
2	Car building channel, 4 x 13.8 lb	Steel	1
3	Auxiliary mounting plate, .38	Steel	1
4	Horizontal mounting plate, .50	Steel	1
5	Hex head bolt, .750-10UNC-2A x 7.00 lg	Steel (heat-treated)	6
6	Hex head nut, .750-10UNC-2B	Steel (heat treated)	6
7	Washer, 2.00 OD x .18 ID	Steel	12
8	Pipe spacer, 1.00 standard, 2.81 lg	Steel	6
9	Gusset plate, .38	Steel	2
10	Gusset plate, .38	Steel	2
11	Gusset plate, .38	Steel	2
12	Horizontal mounting plate, .50	Steel	1
13	Horizontal mounting plate, .50	Steel	1
14	Stiffener, .38	Steel	4
15	Auxiliary mounting plate, .38	Steel	1
16	Auxiliary mounting plate, .38	Steel	1

1/ Quantities are for three mountings.

Inches	mm	Inches	mm	Inches	mm	Inches	mm
.18	4.57	1.25	31.75	9.00	228.60	20.00	508.00
.25	6.35	1.50	38.10	11.00	279.60	24.00	609.60
.38	9.65	2.00	50.80	12.00	304.80	26.50	673.10
.50	12.70	2.50	63.50	12.38	314.45	27.00	685.80
.62	15.75	2.81	71.73	13.00	330.20	27.75	704.85
.81	20.57	3.00	76.20	15.00	381.00		
1.00	25.40	7.00	177.80	16.00	406.40		

NOTES:
1. Unless otherwise specified, tolerance is ±.06 (1.52 mm).
2. Mounting platform number 3 shall be similar to mounting platform number 2 with the exception of the horizontal mounting plate and the side gusset plates shall be increased to 22.00 inches (558.80 mm).
3. The smallest mounting platform which will satisfactorily accommodate the specimen shall be selected.
4. If the deep gussets interfere with the mounted specimen, the extra bolt holes shall be used in bolting of mounting platform number 1 in the inverted position to the four lower bolt holes of the anvil plate.

FIGURE 207-6. Standard mounting-fixtures for deck or platform mounted parts - Continued.

4. PROCEDURE.

4.1 Mounting method. The specimens shall be installed by their normal mounting means on the mounting fixture in their normal operating position. Bolts for mounting the parts shall conform to type I, type II, or type III, grade 2, of MIL-DTL-1222, Studs, Bolts, Hex Cap Screws, Socket Head Cap Screws and Nuts. Mounting bolts shall be checked for tightness before each blow. Care shall be taken in the mounting procedure to prevent initial stresses being applied to the specimens prior to shock.

4.2 Anvil-plate bolts and positioning springs. Due to the severity of the shock applied to the anvil plate by a series of three blows, the anvil-plate bolts shall be checked for tightness before each series of blows. The spacing between stops of the positioning springs (1.5 inches) shall also be corrected before each succession of blows.

4.3 Direction of shock. A total of nine blows, three through each of the three principal mutually perpendicular axes for the heights indicated in 4.4, shall be delivered to the anvil plate supporting the specimens under test. Direction of the shock shall be, in order, to the back, top, and side. Back and top blows shall be applied with the anvil plate located to receive blows from the horizontal and vertical hammers. Side blows are delivered by the horizontal hammer contacting the end shock pad of the anvil plate (see 3.1).

4.4 Height of hammer drops. The hammer shall strike the shock pad on the anvil plate, in sequence, from heights of 1 foot, 3 feet, and 5 feet.

4.5 Hammer supports. During the test, the hammer not in use shall be disengaged from the lifting cable and supported so that the hammer and its support are not in contact with the anvil plate.

4.6 Electrical load and operating conditions. The electrical load and operating conditions applied to the specimens shall be as specified.

4.7 External resilient mountings. Unless otherwise specified, no external resilient mountings associated with the specimen being tested shall be used. Integral mounting devices and external resilient mountings (if specified) associated with the specimen shall remain unblocked during tests.

5. MEASUREMENTS. Monitoring of the specimens during test (e.g., delayed contact opening of relays, momentary stopping of dynamotors, calibration errors in meters) shall be as specified. Upon completion of the required number of blows, electrical and physical measurements shall be made as specified. Allowable tolerances shall be as specified.

6. SUMMARY. The following details are to be specified in the individual specification:

a. Mounting fixtures (see 3.3).

b. Electrical load on operating conditions, if applicable (see 4.6).

c. External resilient mountings, if required (see 4.7).

d. Monitoring during test, measurements after test, and allowable tolerances, as applicable (see 5).

METHOD 208H

SOLDERABILITY

1. PURPOSE. The purpose of this test method is to determine the solderability of all terminations which are normally joined by a soldering operation. This determination is made on the basis of the ability of these terminations to be wetted by solder and the predictability of a suitable fillet resulting from solder application. These procedures will verify that the pre-assembly lead finish provides a solderable surface of sufficient quality to enable satisfactory soldering.

2. PROCEDURE. The solderability test shall be performed in accordance with J-STD-002 "Solderabiilty Tests for Component Leads, Terminations, Lugs, Terminals and Wires" and herein. The following details and exceptions shall apply:

2.1 Contractual agreements. The contractual agreements statement in J-STD-002 shall not apply. Any exceptions to the requirements specified in J-STD-002 and this test method shall be documented in the individual military procurement document or approved by the procuring military activity.

2.2 Coating durability. The coating durability category (from J-STD-002) shall be as follows:

a. Category 2 - for stranded wire (1 hour ±5 minutes steam aging with insulation removed).

b. Category 3 - for all other components (8 hours ±15 minutes steam aging).

2.3 Test method. The test method used (from J-STD-002) shall be as follows:

a. Test A - for through-hole mount and surface mount leaded components, solid wire less than .045 inch diameter and stranded wire 18 AWG or smaller. If not otherwise specified in the procurement document, angle of immersion for surface mount leaded components shall be 90°.

b. Test B - for surface mount leadless components.

c. Test C - for lugs, tabs, terminals, solid wire greater than .045 inch diameter and stranded wire larger than 18 AWG.

3. SOLDERING IRON TEST METHOD. When specified in the individual specification, the soldering iron test method shall be performed as specified herein.

3.1 Apparatus. The soldering iron used shall be temperature controlled and shall be capable of maintaining the measured idling tip temperature within ±5.5°C. Three-wire cords and tip grounding shall be used. The solder iron shall be of such design as to provide zero voltage switching. Solder guns of the transformer type shall not be used.

3.2 Materials. The solder shall be composition Sn60Pb40A or Sn63Pb37A of J-STD-006 "Requirements for Electronic Grade Solder Alloys and Fluxed and Non-Fluxed Solid Solders for Electronic Soldering Applications". The solder shall be of form W, flux symbol A, flux percentage symbol 6 or 7 (see J-STD-006).

3.3 Procedure. Preparation of terminations and aging shall be as specified in J-STD-002 and 2.2 above. Flux shall be applied by a suitable method (e.g., brush) and allowed to drain for 5 to 20 seconds. Solder in accordance with 3.2 shall be applied to the terminal along with the clean solder coated tip of an iron (unless otherwise specified in the individual specification, iron temperature shall be 350°C) to a point ¼ inch from the nearest insulating material or ½ the exposed length of the terminal, whichever is closer. The termination shall be positioned so that the iron can be applied to the test surface in a horizontal position as in figure 208-1. Unless otherwise specified in the individual specification, the iron shall be applied for a period of 5 ±0.5 seconds and shall remain stationary during this period. Only enough solder shall be applied to flow a single thin layer of new solder.

Should mechanical support for the termination be required while performing this test, such support shall be of thermally insulating material. For solder cups, the cup shall be filled with solder in accordance with 3.2, and the excess solder wicked out with a compatible fluxed solder wick. Prior to examination, flux residue shall be removed from the terminations by cleaning in a suitable solvent. Terminations shall be examined as specified in ANSI/J-STD-002.

4. SUMMARY. The following details shall be specified in the applicable procurement document.

   a. Depth of immersion if other than specified.

   b. Angle of immersion for surface mount leaded components, if other than 90°.

   c. Measurements after test, when applicable.

   d. Whether soldering iron method is to be used.

      1. Soldering iron temperature if other than 350°C.

      2. Duration of application of soldering iron if other than 5 ±0.5 seconds.

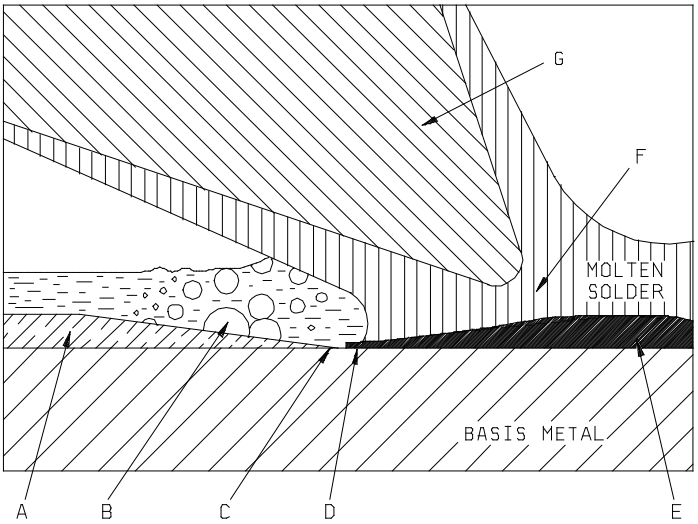

A. FLUX SOLUTION LYING ABOVE OXIDIZED METAL SURFACE.

B. BOILING FLUX SOLUTION REMOVING THE FILM OF OXIDE.

C. BARE METAL IN CONTACT WITH FUSED FLUX.

D. LIQUID SOLDER REPLACING FUSED FLUX.

E. TIN REACTING WITH THE BASIS METAL TO FORM A NEW ALLOY.

F. SOLDER FORMING HEAT BRIDGE.

G. SOLDERING IRON TIP SHOWN NOT TOUCHING BASIS METAL FOR CLARITY.

FIGURE 208-1. Soldering iron position and process diagram.

METHOD 209

RADIOGRAPHIC INSPECTION

1. PURPOSE. Radiographic inspection is generally a nondestructive (see 1.1) method for detecting internal physical defects in small component parts which are not otherwise visible. Radiographic techniques are intended to reveal such flaws as improper positioning of elements, voids in encapsulating or potting compounds, inhomogeneities in materials, presence of foreign materials, broken elements, etc.

1.1 Precautions. Radiographic inspection may be performed on most parts; however, radiation may cause changes in electrical behavior of some materials.

2. APPARATUS AND MATERIALS.

2.1 Radiographic equipment. The radiographic equipment used shall be capable of producing the required radiographic quality as specified in the individual specification. When using X-ray equipment, X-ray tubes with small effective focal-spot sizes and low inherent filtration are recommended.

2.2 Film holder. A lightproof film holder of low inherent filtration to radiation is recommended when using voltages of 50 kilovolts. A lead backing plate should be used behind the film holder to minimize fogging due to secondary back-scatter.

2.3 Image-quality indicator. The image-quality indicators used to indicate radiographic sensitivity shall be as specified in the individual specification. The sensitivity is the combined measure of the definition and contrast of the radiograph and should be such that the maximum allowable defect shall be shown. The image-quality indicator may be made from a sample part of the same type as the part being radiographed and should contain either an actual or simulated defect which is at least 10 percent smaller than the smallest defect to be detected.

2.4 Film. The film shall be compatible with the sensitivity required in 2.1. In general, finer detail is achieved by the use of finer grain films with lower exposure indexes. If extreme magnification techniques are required, the use of single emulsion films is recommended.

2.5 Nonfilm techniques. Nonfilm techniques may be used if required sensitivity levels, and records (when specified) can be obtained (see 2.1).

2.6 Personnel safety precautions. The safety precautions described in National Bureau of Standards (NBS) Handbook 76 - X-Ray Protection; NBS Handbook 73 - Protection Against Radiations From Sealed Gamma Sources; Atomic Energy Commission Book Title 10, Part 20 - Standard for Protection Against Radiation, Part 30 - Licensing of By-product Material, Part 31 - Radiation Safety Requirements for Radiographic Operations, shall be complied with when applicable.

3. PROCEDURE.

3.1 Positioning of specimen. The leaded film holder is backed up by the lead plate (see 2.2), and the specimen to be radiographed shall be placed in the position or positions specified in the individual specification.

3.2 Exposure parameters. The following exposure parameters may be varied to obtain the radiographic quality specified in 2.1:

a. Source - film distance.

b. Kilovoltage or type of isotope.

c. Milliamperage or source strength of isotope.

d. Exposure time.

e. Film speed.

f. Intensifying screen.

The detail sensitivity is affected by the following:

a. Focal spot size.

b. Film grain size.

c. Nature of the specimen.

d. Placement of the specimen.

The above factors should be taken into consideration when determining the exposure parameters.

3.3 Intensifying screens. In general, metallic intensifying screens should be used at X-ray tube voltages above 125 kilovolts to minimize fogging and for intensifying effects.

3.4 identification of radiographs. Suitable means shall be employed to identify individual specimens on the radiographic record.

3.5 Marking of radiographed specimens. If required, suitable marking shall be specified in the individual specification indicating that specimens have been inspected radiographically.

4. EVALUATIONS. The final image shall be examined with suitable viewing equipment, which may include magnification, to determine such defects as improper positioning of elements, voids in encapsulating or potting compounds; inhomogeneities in materials; presence of foreign materials; broken elements; and other defects as specified in the individual specification.

5. SUMMARY. The following details are to be specified in the individual specification:

a. Required radiographic quality (see 2.1 and 4).

b. Image-quality indicator to be used (see 2.3).

c. Records, if required for nonfilm techniques (see 2.5).

d. Position or positions of specimen (see 3.1).

e. Marking indicating that specimens have been radiographed, if required (see 3.5).

f. Evaluation of images (see 4).

(1) Specific kind of viewing equipment, if required.

(2) Magnification, if required.

(3) Defects to be sought in the specimen.

METHOD 210F

RESISTANCE TO SOLDERING HEAT

1. PURPOSE. This test is performed to determine whether wire and other component parts can withstand the effects of the heat to which they will be subjected during the soldering process (solder iron, solder dip, solder wave, or solder reflow). The heat can be either conducted heat through the termination into the component part, or radiant heat from the solder bath when in close proximity to the body of the component part, or both. The solder dip method is used as a reasonably close simulation of the conditions encountered in wave soldering, in regard to radiated and conducted heat. This test also is intended to evaluate the impact of reflow techniques to which components may be exposed. The heat of soldering can cause solder reflow which may affect the electrical characteristics of the component part and may cause mechanical damage to the materials making up the part, such as loosening of terminations or windings, softening of insulation, opening of solder seals, and weakening of mechanical joints.

2. APPARATUS.

2.1 Solder pot. A static solder pot, of sufficient size to accommodate the mounting board (see 2.4) and to Immerse the terminations to the depth specified for the solder dip (without touching the bottom of the pot), shall be used. This apparatus shall be capable of maintaining the solder at the temperature specified. The solder bath temperature shall be measured in the center of the pot at a depth of at least .500 inch (12.7 mm), but no deeper than 1 inch (25.4 mm) below the surface of the solder.

2.2 Heat sinks or shielding. The use of heat sinks or shielding is prohibited except when it is a part of the component. When applicable, heat sinks or shielding shall be specified in the individual specification, including all of the details, such as materials, dimensions, method of attachment, and location of the necessary protection.

2.3 Fixtures. Fixtures, when required, shall be made of a non-solderable material designed so that they will make minimum contact (i.e., minimum heat sink) with the component. Further, they shall not place undue stress on the component when fixtured.

2.4 Mounting board. A mounting board, in accordance with NEMA grade FR-4 of IPC 4101, 9 square inches (i.e., 3 x 3, 1 x 9, etc.), minimum area, .062 inch ±.0075 inch (1.57 mm ±.191 mm) thick, shall be used, unless otherwise specified. Component lead holes shall be drilled such that the diametrical clearance between the hole and component terminals shall not exceed .015 inch (0.38 mm). Metal eyelets or feed-throughs shall not be used. Surface mount boards, when specified in the individual specification, shall have pads of sufficient size and number to accommodate the component being tested.

2.5 Solder iron. A solder iron, capable of maintaining a temperature of 350°C ±10°C, shall be used.

2.6 Reflow chambers. The reflow chambers or equivalent (Vapor Phase Reflow (VPR) chamber, Infrared Reflow (IRR) oven, air circulating oven, etc.) shall be of sufficient size to accommodate the mounting board and components to be tested. The chamber shall be capable of generating the specified heating rate, temperatures, and environments.

2.7 Temperature measurement. Low mass thermocouples that do not affect the heating rate of the sample shall be used. A temperature recording device is recommended. The equipment shall be capable of maintaining an accuracy of ±1°C at the temperature range of interest.

3. MATERIALS.

3.1 Solder. The solder or solder paste shall be tin-lead alloy with a nominal tin content of 50 percent to 70 percent in accordance with J-STD-006, “Requirements for Electronic Grade Solder Alloys and Fluxed and Non-Fluxed Solid Solders for Electronic Soldering Applications” or J-STD-005, “Requirements for Soldering Pastes”. When specified in the individual specification, other solders can be used provided they are molten at the specified temperature.

3.2 Flux. When flux is used, it shall conform to type A of J-STD-004, "Requirements for Soldering Fluxes", or as specified in the individual specification.

3.3 VPR fluid. A perfluorocarbon fluid that has a boiling point of 215°C shall be used.

4. PROCEDURE.

4.1 Special preparation of specimens. Any special preparation of specimens prior to testing shall be as specified in the individual specification. This could include specific instructions such as bending or any other relocation of terminations, cleaning, application of flux, pretinning, or attachment of heat sinks or protective shielding (see 2.2), prior to the solder immersion.

4.2 Preparation of solder bath. The molten solder shall be agitated to assure that the temperature is uniform. The surface of the solder shall be kept clean and bright.

4.3 Application of flux. When flux is used, the terminations to be tested shall be immersed in the flux (see 3.2), which is at room ambient temperature, to the depth specified for the solder dip. The duration of the immersion shall be from 5 seconds to 10 seconds.

4.4 Test conditions. Unless otherwise specified in the individual specification, the test shall be performed on all solder terminations attached to the component part. There are six types of soldering techniques covered by these test conditions. The test conditions are outlined below and in table I.

Test condition A:	Solder iron - Hand soldering of solder cups, through hole components, tab and post terminations, solder eyelet terminations.
Test condition B:	Solder dip - Simulates hot solder dipping (tinning) of leaded components.
Test condition C:	Wave solder - Simulates wave solder of topside board mount product.
Test condition D:	Wave solder - Simulates wave solder of bottomside board mount product.
Test condition H:	VPR - VPR environment without preheat.
Test conditions I, J, K:	Infrared/Convection reflow - Simulates IRR, natural convection, and forced air convection reflow environments.

4.4.1 Test condition A: Solder iron.

a. When testing a solder cup, tab and post termination, or solder eyelet termination, the applicable wire size, properly prepared for the solder termination, shall be attached in the appropriate manner.

   When testing a board mount component, the component shall be placed on a mounting board (see 2.4).

b. When specified, the components shall be fluxed (see 4.3).

c. Unless otherwise specified, a solder iron in accordance with 2.5 shall be used.

d. The solder iron shall be heated to 350°C ±10°C and applied to the termination for a duration of 4 seconds to 5 seconds as specified in table I. The solder and iron shall be applied to the area of the assembly closest to the component body that the product is likely to experience. For surface mount components, the iron shall be placed on the pad only.

e. Remove the iron and allow the component to cool and stabilize at room ambient conditions. If flux was used, the component shall be cleaned using an appropriate cleaning solution.

f. The component shall be visually examined under 10X magnification.

4.4.2 Test condition B: Solder dip.

a. Place the component in an appropriate fixture (see 2.3).

b. When specified, the leads shall be fluxed (see 4.3).

c. The specific combination of temperature, immersion and emersion rate, immersion duration, and number of heats shall be as specified in table I. Unless otherwise specified, terminations shall be immersed to within .050 inch (1.27 mm) of the component body. Terminations shall be immersed simultaneously, if the geometry of the component permits.

d. After the solder dip, the component shall be allowed to cool and stabilize at room ambient conditions. If flux was used, the component shall be cleaned using an appropriate cleaning solution.

e. The component shall be visually examined under 10X magnification.

4.4.3 Test condition C: Wave solder - topside board mount component.

a. The component under test shall be mounted on a mounting board (see 2.4).

Wire leads: Wire leads shall be brought through the board holes and bent at least 30 degrees from a line perpendicular to the board. Leads shall extend from .050 inch to .100 inch (1.27 mm to 2.54 mm) from the bottom of the board. Axial leads shall be bent at a 90° angle at a point between .06 inch and .08 inch (1.5 mm and 2.1 mm) from the body, eyelet fillet or weld unless otherwise specified (see figure 210-1).

Pin leads: Where the component is designed with rigid pin leads, the full length of the termination shall be retained. Pin leads shall not be cut or bent (see figure 210-1).

b. When specified, the leads shall be fluxed (see 4.3).

c. The specific combination of temperature, duration, and number of heats shall be as specified in table I.

d. The components, mounted on the board, shall be immersed in the solder pot so that the bottom of the board floats on the molten solder.

e. After the float, the components shall be allowed to cool and stabilize at room ambient conditions. If flux was used, the components shall be cleaned using an appropriate cleaning solution.

f. The components shall be visually examined under 10X magnification.

4.4.4 Test condition D: Wave solder - bottomside board mount product.

a. Place the component in an appropriate fixture (see 2.3).

b. When specified, the terminations shall be fluxed (see 4.3).

c. The specific combination of temperature, preheat conditions, immersion and emersion rates, immersion duration, and number of heats shall be as specified in table I.

d. The component shall be preheated and fully immersed in the solder bath in accordance with 4.4.4c.

e. After the immersion, the component shall be allowed to cool and stabilize at room ambient conditions. If flux was used, the component shall be cleaned using an appropriate cleaning solution.

f. The component shall be visually examined under 10X magnification.

4.4.5 Test condition H: Vapor phase reflow soldering.

a. Components shall be mounted on a mounting board (see 2.4). Through-hole mounted components shall have their terminals inserted into the termination holes. Surface mount components shall be placed on top of the board.

b. A test chamber (see 2.6) shall be used which is large enough to suspend the mounting board without touching the sides or the solution. The VPR fluid shall be placed in the test chamber and shall be heated until it is boiling. The solution shall be allowed to boil for 5 minutes prior to suspending the mounting board.

c. The specific combination of temperature, duration of exposure, and number of heats shall be as specified in table I.

d. After chamber equalization, the mounting board shall be suspended into the vapor in a horizontal plane. The mounting board shall not touch the solution.

e. After the heat, the components shall be allowed to cool and stabilize at room ambient conditions. If a solder paste was used, the component shall be cleaned using an appropriate solution.

f. The components shall be visually examined under 10X magnification.

4.4.6 Test conditions I, J, K: Infared/convection reflow soldering.

a. Components shall be mounted on a mounting board (see 2.4). Through-hole mounted components shall have their terminals inserted into the termination holes. Surface mount components shall be placed on top of the board.

b. A test chamber as specified in 2.6 shall be used.

c. A low mass thermocouple shall be attached tightly to the component at an appropriate position away from the edges.

d. The specific combination of temperature, preheat, duration, and number of heats shall be as specified by test condition I, J, or K in table I and the individual procurement document.

e. The board shall be placed into the test chamber and the temperature of the component ramped at a rate of 1°C/s to 4°C/s as measured by the thermocouple. The assembly shall be above 183°C for 90 seconds to 120 seconds and held at the final temperature and time designated by the test condition. The assembly shall then be allowed to cool to room ambient temperature. This constitutes one heat cycle. The assembly shall be exposed to three heat cycles.

f. The components shall be visually examined under 10X magnification.

5. EXAMINATIONS AND MEASUREMENTS. Examinations and measurements to be made before and after the test, as applicable, shall be as specified in the individual specification. After the procedure, the specimens shall be allowed to cool and stabilize at room ambient conditions, for the time specified in the individual specification.

5.1 Internal examination. When specified, internal examination of the part shall be made after the test to check for solder reflow or heat damage.

6. SUMMARY. The following details are to be specified in the individual specification:

a. The use of heat sinks or shielding is prohibited except when they are part of the component (see 2.2).

b. Mounting board, if different from that specified (see 2.4).

c. Solder, if different from that specified (see 3.1).

d. Flux, if applicable and if different from that specified (see 3.2, 4.1, and 4.3).

e. Solder terminations that are not to be tested, if applicable (see 4.4).

f. Special preparation of specimens if applicable (see 4.1).

g. Depth of immersion in the molten solder, if different from that specified (see 4.4.2).

h. Test condition letter (see 4.4).

i. Cooling time prior to final examinations and measurements (see 4.4 and 5).

j. Examinations and measurements before and after test, as applicable (see 5).

k. Method of internal inspection, if required (see 5.1).

TABLE I. Test conditions.

Solder technique simulation	Test condition	Temperature (°C)	Time (s)	Temperature ramp/ immersion and emersion rate	Number of heat cycles
Solder iron	A	350 ±10 (solder iron temp)	4 - 5		1
Dip	B	260 ±5 (solder temp)	10 ±1	25mm/s ±6 mm/s	1
Wave: Topside board-mount product	C	260 ±5 (solder temp)	20 ±1		1
Wave: Bottomside board-mount product	D	260 ±5 (solder temp)	10 ±1	Preheat 1°C/s-4°C/s to within 100°C of solder temp. 25 mm/s ± 6 mm/s	1
	E	CANCELLED			
	F	CANCELLED			
	G	CANCELLED			
Vapor phase reflow	H	215 ±5 (vapor temp)	60 ±5		1
IR/convection reflow	I	215 ±5 (component temp)	30 ±5	1°C/s-4°C/s; time above 183°C, 90 s - 120 s	3
	J	235 ±5 (component temp)	30 ±5	1°C/s-4°C/s; time above 183°C, 90 s - 120 s	3
	K	250 ±5 (component temp)	30 ±5	1°C/s-4°C/s; time above 183°C, 90 s - 120 s	3

Test condition E is cancelled; use test condition C.
Test condition F is cancelled; use test condition B.
Test condition G is cancelled.

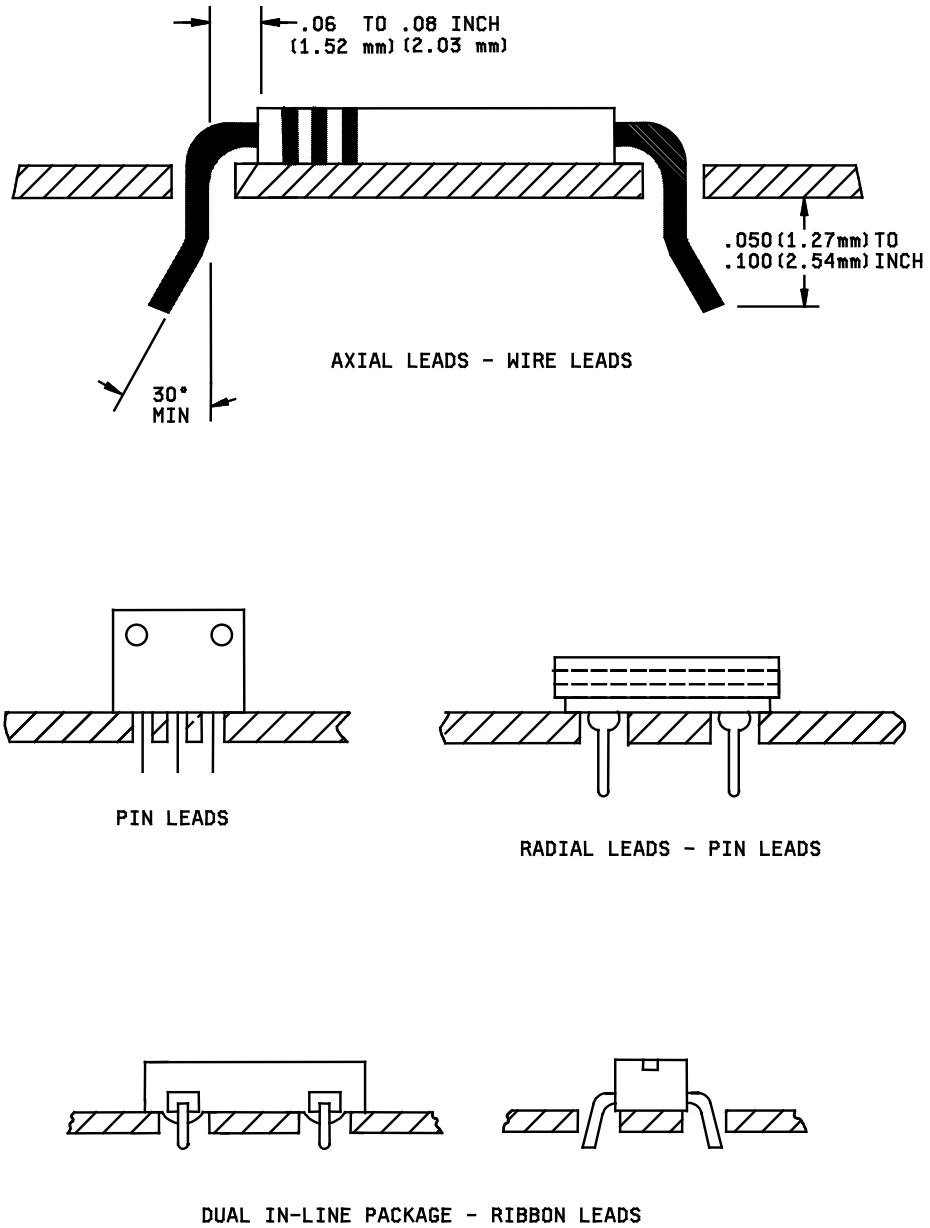

FIGURE 210-1. Component lead and mounting examples.

METHOD 211A

TERMINAL STRENGTH

1. PURPOSE. This test is performed to determine whether the design of the terminals and their method of attachment can withstand one or more of the applicable mechanical stresses to which they will be subjected during installation or disassembly in equipment. These stresses must be withstood by the component part without sustaining damage which would affect either the utility of the terminals or the operation of the component part itself. Evidence of damage caused by this test may not become evident until subsequent environmental tests are performed, such as seal, moisture resistance, or life. Procedures are established in this method for testing wire-lead terminals, flexible-flat-strip or tab-lead terminals, and rigid-type terminals which are threaded or have other arrangements for attaching conductors. The forces applied consist of direct axial, radial or tension pulls, twist, bending torsion, and the torque exerted by the application of nuts or screws on threaded terminals. These applied stresses will disclose poor workmanship, faulty designs, and inadequate methods of attaching terminals to the body of the part. Other evidence of damage may be disclosed by mechanical distortion of the part, breaking of seals, cracking of materials surrounding the terminals, or changes in electrical characteristics, such as shorted or interrupted circuits and changes in resistance values.

2. TEST CONDITIONS.

2.1 Selection. In this method there are five test conditions, A, B, C, D, and E. The selection of test conditions to perform the terminal-strength test depends on the type of terminal to be tested. The individual specification shall specify the test condition required. The following is included as a guide to be used, as applicable:

Test condition A: Pull test - also known as a tension or tensile test for terminals. It is usually applicable to most types of terminals.

Test condition B: Flat-terminal bend test - also known as a bend test. It is applicable to flexible-flat-strip or tab-lead terminals which can be bent by finger pressure.

Test condition C: Wire-lead bend test - also known as a lead-fatigue, bend, or flexibility test. It is applicable to solid-wire-lead terminals of limited ductility, such as nickel-alloy-type leads and those used in hermetically-sealed component parts.

Test condition D: Twist test - also known as a torsion test. It is usually applicable to ductile, solid-wire-lead terminals intended for wraparound connections.

Test condition E: Torque test - It is applicable to rigid-type terminals having either external screw threads or threaded inserts which are located at the center of the terminal, or to other non-wire, rigid-type terminals which should withstand the turning moment that results from a force applied from an off-center point on the terminal.

3. PROCEDURE. One or more of the following test condition letters shall be specified in the individual specification:

3.1 Test condition A (pull test).

3.1.1 Method of holding. If the method of holding or clamping is pertinent, it shall be specified in the individual specification.

3.1.2 Applied force. The force applied to the terminal shall be 1/2, 1, 2, 3, 5, 10, or 20 pounds, as specified in the individual specification.

3.1.3 Direction of applied force. The point of application of the force and the force applied shall be in the direction of the axes of the terminations, as shown on figure 211-1.

3.1.4 Duration of applied force. The force shall be applied gradually to the terminal and then maintained for a period of 5 to 10 seconds.

3.2 Test condition B (flat-terminal bend test).

3.2.1 Starting position of terminal. Prior to the test, the terminal shall be observed to determine if it is oriented in its normal or unbent position, or if it is permanently bent out of position, as could occur as a result of prior testing.

3.2.2 Bending cycle. If the method of bending is not critical, the terminals may be bent by finger pressure through a bending cycle of three bends, as shown on figure 211-2. The bending cycle shall start with a 45° bend to one side of the normal position. If the terminal is already bent to an angle between 0° and 45° to one side of the normal position prior to test, it shall be bent in the same direction until an angle of 45° is achieved. The terminal shall then be bent 90° in the opposite direction to a point 45° on the opposite side of the normal position, and then back 45° to normal. If the method of bending is critical, the individual specification shall specify the method of bending and any fixture required to control the point of application. The rate of bending shall be approximately 3 seconds per bend in each direction.

3.2.3 Number of bending operations. The number of bending operations shall be two or five, as specified in the individual specification.

3.3 Test condition C (wire-lead bend test).

3.3.1 Preparation of specimen. A load of 1/4, 1/2, 1, 5, or 10 pounds, as specified in the individual specification, shall be suspended from the terminal. The load selected shall be that closest in value to one-half the load applied during the pull test. The body of the component part shall be held with a suitable clamping or attaching device, so that the terminal is in its normal position with respect to the component part. The load shall be suspended at a point within 1/4 inch from the free end of the terminal.

3.3.2 Bending cycle. The body of the component part shall be slowly inclined so as to bend the terminal through 90° and then return it to normal position, as shown on figure 211-3. This entire action shall be limited to one vertical plane. A bend through 90° and return to normal position shall be defined as one bend. Consecutive bends shall be in the same direction. The load shall be restricted such that the bend starts 3/32 ±1/32 inch from the body of the component part. The rate of bending shall be approximately 3 seconds per bend in each direction.

3.3.3 Number of bending operations. The number of bending operations shall be three.

3.4 Test condition D (twist test).

3.4.1 Preparation of specimen. The solid-wire-lead terminal shall be bent 90° at a point 1/4 inch from its juncture with the body of the component part, as shown on figure 211-4. The radius of curvature of the 90° bend shall be approximately 1/32 inch. The free end of the terminal shall be clamped at a point 3/64 ±1/64 inch away from the bend, as shown on figure 211-4.

3.4.2 Application of torsion. The body of the component part or the clamped terminal shall be rotated through 360° about the original axis of the bent terminal, in alternating directions, for a total of three rotations 1080°, at the rate of approximately 5 seconds per rotation.

3.5 Test condition E (torque test).

3.5.1 Direction and application of torque. The torque shall be applied clockwise and then counterclockwise in a plane perpendicular to the axis of the terminal, as shown on figure 211-5.

3.5.2 Duration of applied force. The force shall be applied gradually to the terminal and then maintained for a period of 5 to 15 seconds.

3.5.3 Screw-thread terminals. When testing screw-thread terminals, the torque, in accordance with the terminal size, shall be applied to the centerline of the terminal assembly, as follows:

Screw-thread terminals	Torque (pound-inches)
No. 4	3.0
No. 6	5.0
No. 8	11.0
No. 10	15.0
No. 12	24.0
1/4 inch	32.0

3.5.4 Other non-wire, rigid-type terminals. When testing other non-wire, rigid-type terminals, the applied torque is dependent on the equivalent diameter of the external portion of the terminal assembly. The equivalent diameter is defined as equal to twice the distance from the terminal axis to the point of normal wire connection, as shown in the examples on figure 211-6. The torque shall be applied in accordance with the equivalent diameter, as follows:

Equivalent diameter (inch)	Torque (ounce-inches)
1/16 or less	0
>1/16 to 1/8 inclusive	8
>1/8 to 3/16 inclusive	18
>3/16 to 5/16 inclusive	40
>5/16 to 1/2 inclusive	80
>1/2	As specified in the individual specification

4. MEASUREMENTS. Measurements to be made before and after the test, as applicable, shall be as specified in the individual specification.

5. SUMMARY. The following details are to be specified in the individual specification:

a. Test condition letter(s) (see 3).

b. If test condition letter A is specified:

(1) If pertinent, the method of holding or clamping (see 3.1.1).

(2) Whether applied force shall be 1/2, 1, 2, 3, 5, 10, or 20 pounds (see 3.1.2).

c. If test condition letter B is specified:

(1) If critical, the method of bending and fixture required (see 3.2.2).

(2) Whether number of bends shall be 2 or 5 (see 3.2.3).

d. If test condition letter C is specified:

(1) Whether the load shall be 1/4, 1/2, 1, 5, or 10 pounds (see 3.3.1).

e. If test condition letter E is specified:

(1) Torque to be applied to non-wire, rigid-type terminals when equivalent diameter is greater than 1/2 inch (see 3.5.4).

f. Measurements before and after test, as applicable (see 4).

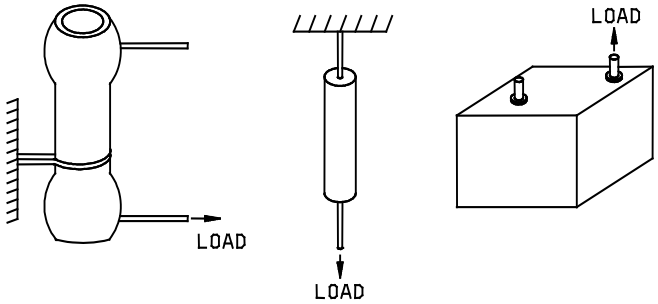

FIGURE 211-1. Test condition A.

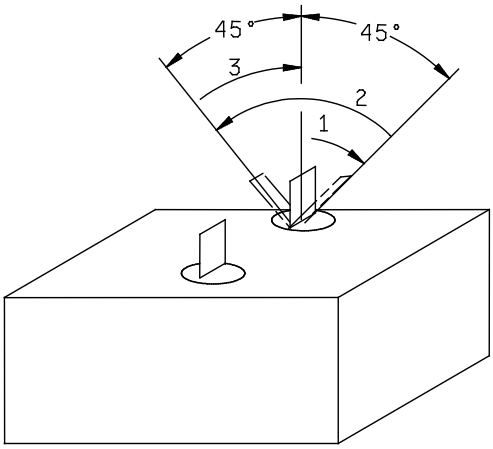

FIGURE 211-2. Test condition B.

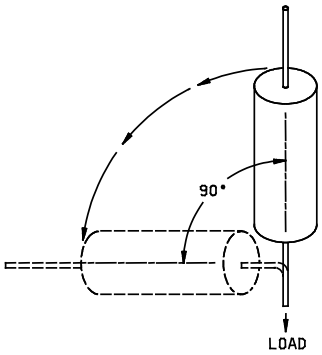

FIGURE 211-3. Test condition C.

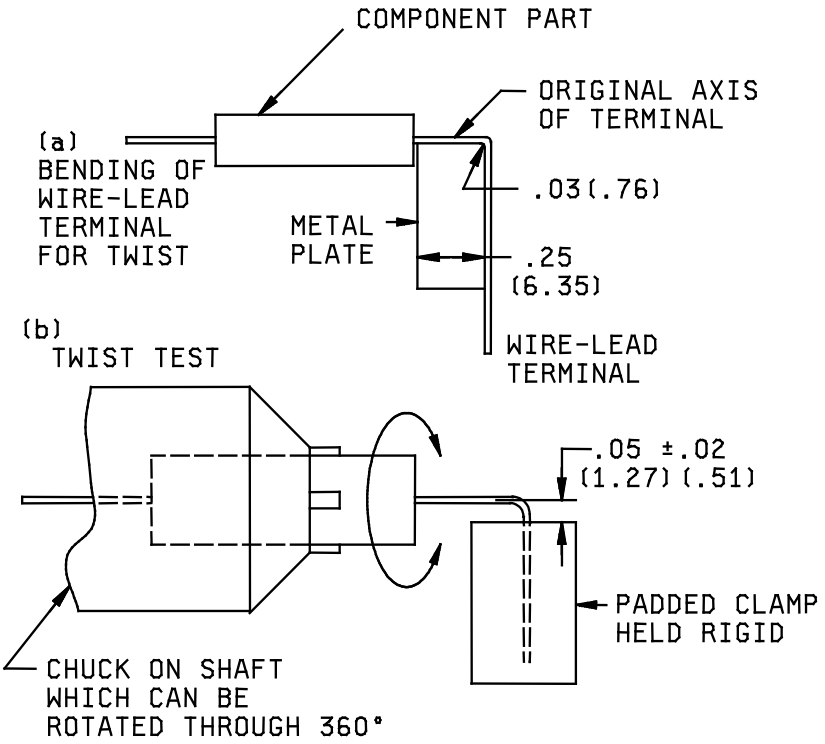

STEP 1. Bend lead with fingers, over rounded edge of metal plate as shown in (a).
STEP 2. Center component part in chuck; secure lead in clamp as shown in (b).
STEP 3. Rotate chuck part through 360° at a rate of approximately 5 seconds per 360° rotation. Successive rotations shall be in alternate directions. A total of three such 360° rotations shall be performed. During this test, the chuck shall rotate around an axis which is fixed with respect to the padded clamp, or vice versa. The chuck shall have no appreciable end play during rotation.

NOTES:
1. Dimensions are in inches.
2. Metric equivalents are in parentheses and are given for general information only.

FIGURE 211-4. Test condition D.

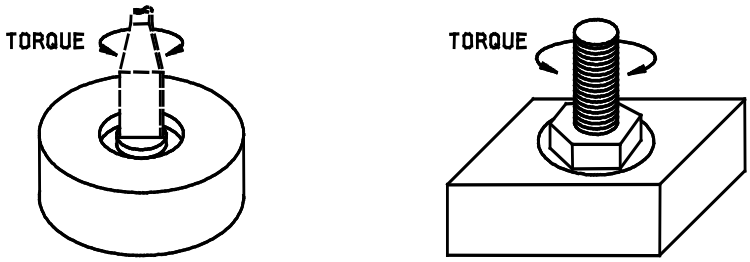

FIGURE 211-5. Test condition E.

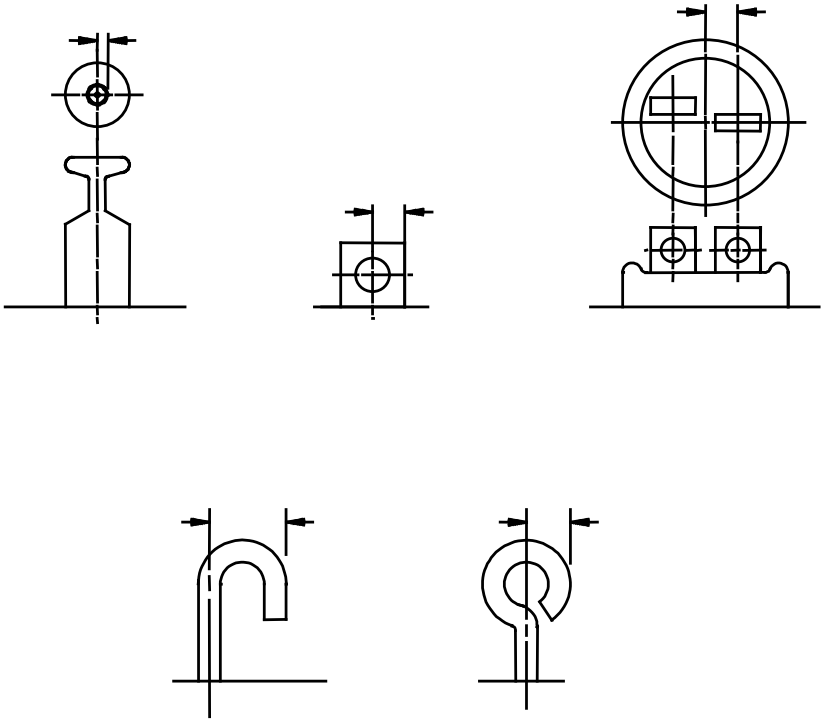

NOTE: Equivalent diameter is twice the distance between the lines indicated by the arrows.

FIGURE 211-6. Method of determining equivalent diameter.

METHOD 212A

ACCELERATION

1. PURPOSE. This test is performed for the purpose of determining the effects of acceleration stress on component parts, and to verify the ability of the component parts to operate properly during exposure to acceleration stress such as would be experienced in aircraft, missiles, etc.

2. APPARATUS. Unless otherwise specified, the acceleration test apparatus shall be the centrifuge-type and shall be capable of subjecting the test specimen to the value of acceleration (g's) as specified in 3. The acceleration gradient across the specimen shall not exceed 15 percent of the specified g level.

2.1 Mounting accessories. Provisions shall be made to permit mounting by the normal means so that the specimen can be tested in both directions, 180 degrees apart, of each of three mutually perpendicular axes, unless otherwise specified. Parts with axial terminations weighing less than 0.5 ounce shall be soldered to stand-off terminals, leaving a distance of 0.2 inch to 0.3 inch from the point of emergence to the terminals. Parts weighing 0.5 ounce and more shall be clamped so as to avoid any stress on the leads. Parts having radial leads and those of unusual mass distribution shall be mounted as specified in the individual specification. If loading, actuating, or polarizing currents are required, they shall be specified. Provisions shall be made for all electrical connections to be secure.

3. PROCEDURE. The specimen under test shall be mounted in a rigid position as specified in 2.1 and shall be subjected to one of the following test conditions, as specified in the individual specification:

3.1 Test condition A. The specimen shall be subjected to 5 minutes acceleration of the specified "g" level in both directions of each of three mutually perpendicular axes for a total of 30 minutes at either 20, 50, or 100g level. The acceleration measured at any point of the component part shall not exceed 15 percent of the "g" level.

3.2 Test condition B. The specimen shall be subjected for 1 minute at nominally 10,000 or 20,000g in the direction as specified in the individual specification. The rate of acceleration shall be increased smoothly from zero to the specified value in not less than 20 seconds. The rate of acceleration shall be decreased smoothly to zero in not less than 20 seconds.

3.3 Test condition C. The specimen shall be subjected to the value of acceleration specified in the individual specification for 10 minutes in both directions of each of three mutually perpendicular axes. The acceleration shall be increased smoothly from zero to the specified value in approximately 2 minutes. The acceleration shall be decreased smoothly to zero in not less than 2 minutes.

4. MEASUREMENTS. The measurements made before, during, or after the test shall be as specified.

5. SUMMARY. The following details are to be specified in the individual specification:

   a. Mounting of specimens (see 2.1).

   b. Electrical loading if applicable (see 2.1).

   c. Test condition letter (see 3).

   d. If test condition A is specified, the value of g (see 3.1).

   e. If test condition B is specified, the directions of application of acceleration and value of g (see 3.2).

   f. If test condition C is specified, the value of acceleration (see 3.3).

   g. Measurements (see 4).

METHOD 213B

SHOCK (SPECIFIED PULSE)

1. PURPOSE. This test is conducted for the purpose of determining the suitability of component parts and subassemblies of electrical and electronic components when subjected to shocks such as those which may be expected as a result of rough handling, transportation and military operations. This test differs from other shock tests in this standard in that the design of the shock machine is not specified, but the half-sine and sawtooth shock pulse waveforms are specified with tolerances. The frequency response of the measuring system is also specified with tolerances.

2. APPARATUS.

2.1 Shock machine. The shock machine utilized shall be capable of producing the specified input shock pulse as shown on figures 213-1 or 213-2, as applicable. The shock machine may be of the free fall, resilient rebound, nonresilient, hydraulic, compressed gas, or other activating types.

2.1.1 Shock machine calibration. The actual test item, or a dummy load which may be either a rejected item or a rigid dummy mass, may be used to calibrate the shock machine. (When a rigid dummy mass is used, it shall have the same center of gravity and the same mass as that of the test item and shall be installed in a manner similar to that intended for the test item.) The shock machine shall then be calibrated for conformance with the specified waveform. Two consecutive shock applications to the calibration load shall produce waveforms which fall within the tolerance envelope given on figures 213-1 or 213-2. The calibration load shall then be removed and the shock test performed on the actual test item. If all conditions remain the same, other than the substitution of the test item for the calibration load, the calibration shall then be considered to have met the requirements of the waveform.

NOTE: It is not implied that the waveform generated by the shock machine will be the same when the actual test item is used instead of the calibration load. However, the resulting waveform is considered satisfactory if the waveform with the calibration load was satisfactory.

2.2 Instrumentation. In order to meet the tolerance requirements of the test procedure, the instrumentation used to measure the input shock shall have the characteristics specified in the following paragraphs.

2.2.1 Frequency response. The frequency response of the complete measuring system, including the transducer through the readout instrument, shall be as specified by figure 213-3.

2.2.1.1 Frequency response measurement of the complete instrumentation. The transducer-amplifier-recording system can be calibrated by subjecting the transducer to sinusoidal vibrations of known frequencies and amplitudes for the required ranges so that the overall sensitivity curve can be obtained. The sensitivity curve, normalized to be equal to unity at 100 Hz, should then fall within the limits given on figure 213-3.

2.2.1.2 Frequency response measurement of auxiliary equipment. If calibration factors given for the accelerometer are such that when used with the associated equipment it will not affect the overall frequency response, then the frequency response of only the amplifier-recording system may be determined. This shall be determined in the following manner: Disconnect the accelerometer from the input terminals of its amplifier. Connect a signal voltage source to these terminals. The impedance of the signal voltage source as seen by the amplifier shall be made as the impedance of the accelerometer and associated circuitry as seen by the amplifier. With the frequency of the signal voltage set at 100 Hz, adjust the magnitude of the voltage to be equal to the product of the accelerometer sensitivity and the acceleration magnitude expected during test conditions. Adjust the system gain to a convenient value. Maintain a constant input voltage and sweep the input frequency over the range from 1.0 to 9,000 Hz, or 4 to 25,000 Hz, as applicable, depending on duration of pulse. The frequency response in terms of dB shall be within the limits given on figure 213-3.

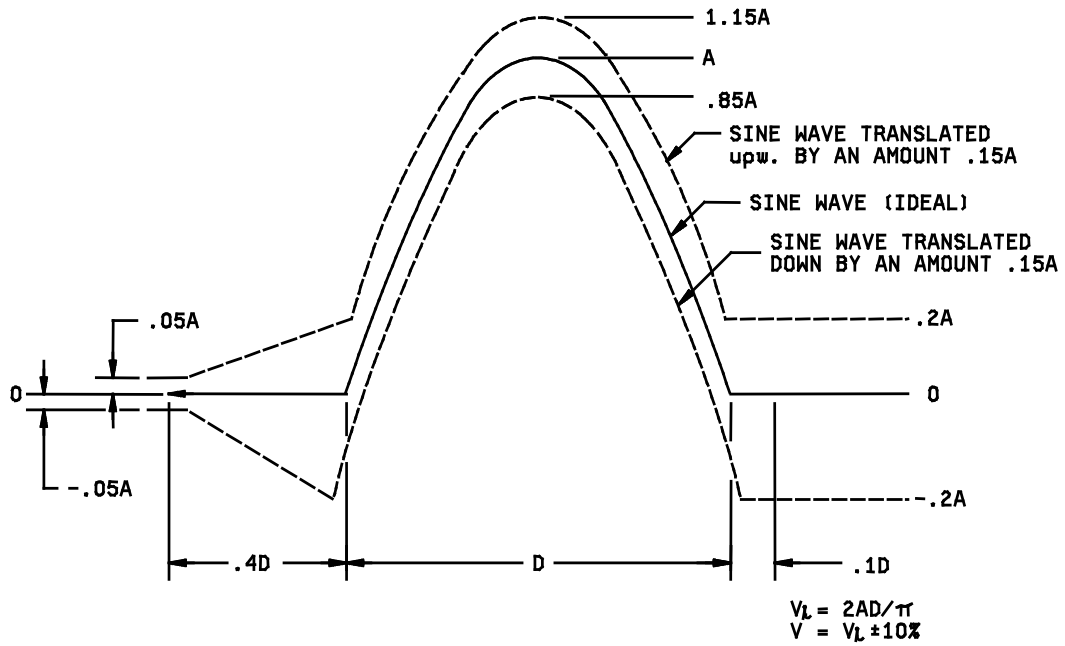

NOTE: The oscillogram should include a time about 3D long with the pulse located approximately in the center. The integration to determine velocity change should extend from .4D before the pulse to .1D beyond the pulse. The acceleration amplitude of the ideal half sine pulse is A and its duration is D. Any measured acceleration pulse which can be contained between the broken line boundaries is a nominal half sine pulse of nominal amplitude A and nominal duration D. The velocity change associated with the measured acceleration pulse is V.

FIGURE 213-1. Tolerances for half sine shock pulse.

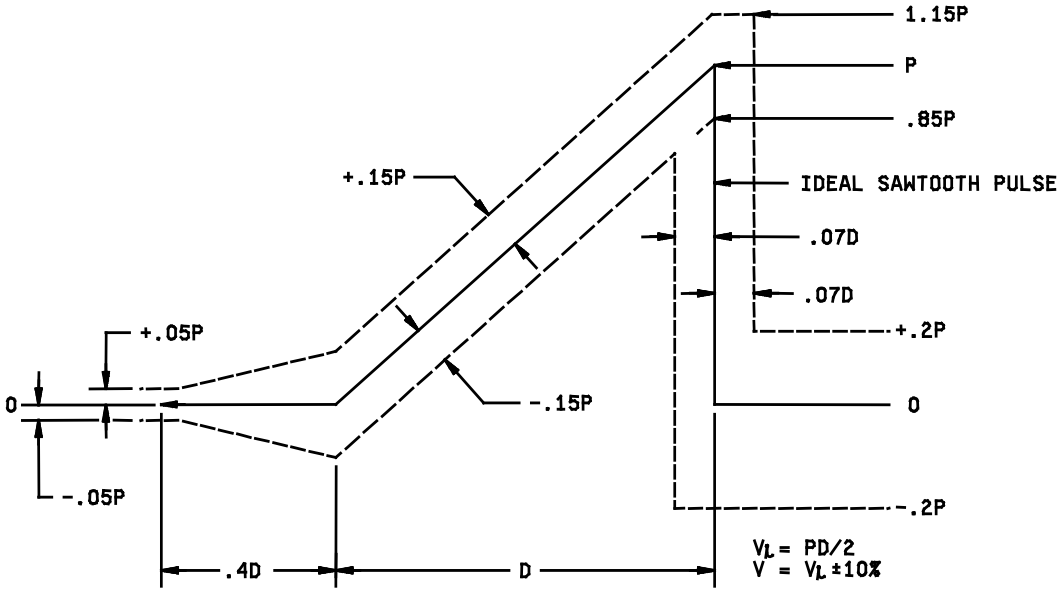

NOTE: The oscillogram should include a time about 3D long with the pulse approximately in the center. The integration to determine the velocity change should extend from .4D before the pulse to .1D beyond the pulse. The peak acceleration magnitude of the sawtooth pulse is P and its duration is D. Any measured acceleration pulse which can be contained between the broken line boundaries is a nominal terminal-peak sawtooth pulse of nominal peak value, P, and nominal duration, D. The velocity change associated with the measured acceleration pulse is V.

FIGURE 213-2. Tolerances for terminal-peak sawtooth shock pulse.

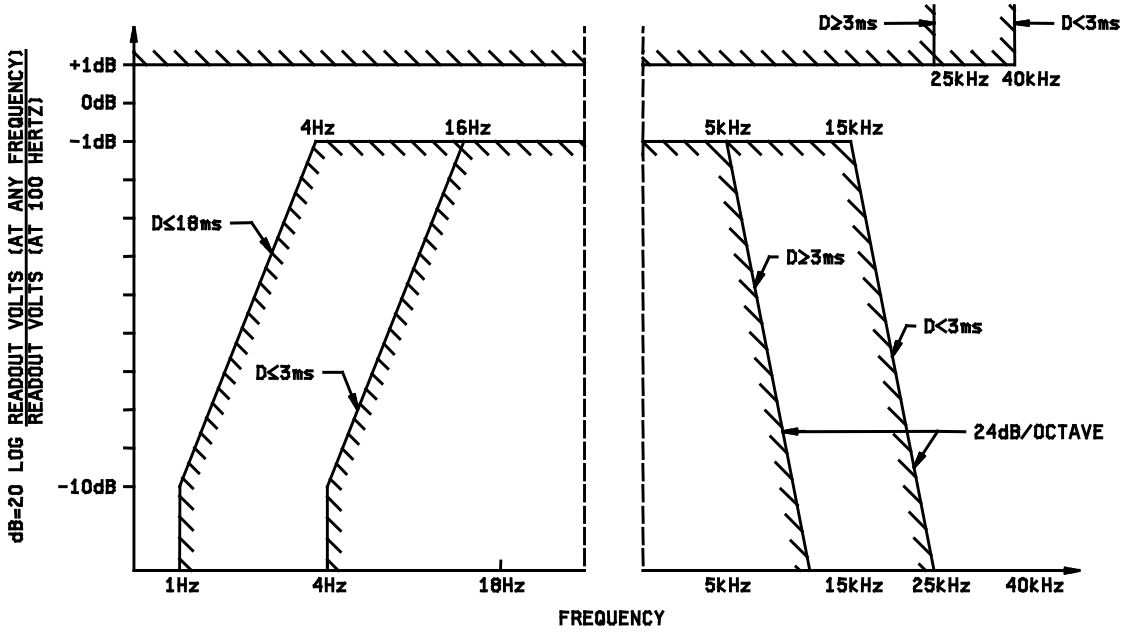

Duration of pulse (ms)	Low frequency cut-off (Hz)		High frequency cut-off (kHz) -1 dB	Frequency beyond which the response may rise above +1 dB (kHz)
	-1dB	-10dB		
3				
<3	16	4	15	40
3	16	4	5	25
>3	4	1	5	25

FIGURE 213-3. Tolerance limits for measuring system frequency response.

2.2.2 Transducer. The fundamental resonant frequency of the accelerometer shall be greater than 30,000 Hz, when the accelerator is employed as the shock sensor.

2.2.3 Transducer calibration. Transducers shall be calibrated in accordance with ASA STD S2.2. The accuracy of the calibration method shall be at least ±5 percent over the frequency range of 2 to 5,000 Hz. The amplitude of the transducer being calibrated shall also be ±5 percent over the frequency range of 4 to 5,000 Hz.

2.2.4 Linearity. The signal level of the system shall be chosen so that the acceleration pulse operates over the linear portion of the system.

2.2.5 Transducer mounting. When conformance to 2.3 is required, the monitoring transducer shall be rigidly secured and located as near as possible to an attachment point of the specimen but not on the specimen itself.

2.3 Application of shock measuring instrumentation. Shock measuring instrumentation shall be utilized to determine that the correct input shock pulse is applied to the test specimen. This is particularly important where a multi-specimen test is made. Generally, the shock pulse should be monitored whenever there is a change in the test setup, such as a different test fixture, different component (change in physical characteristics), different weight, different shock pulse (change in pulse shape, intensity, or duration) or different shock machine characteristics. It is not mandatory that each individual shock be monitored, provided that the repeatability of the shock application as specified in 2.1.1 has been established.

3. SHOCK PULSES. Two types of shock pulses, a half-sine shock pulse and a sawtooth shock pulse, are specified. The pulse shape and tolerances are shown on figures 213-1 and 213-2, respectively. For single degree of freedom systems, a sawtooth shock pulse can be assumed to have a damage potential at least as great as that of the half-sine pulse if the shock spectrum of the sawtooth pulse is everywhere at least as great as that of the half-sine pulse. This condition will exist for two such pulses of the same duration if over most of the spectrum the acceleration peak value of the sawtooth pulse is 1.4 times the acceleration peak value of the half-sine pulse.

3.1 Half-sine shock pulse. The half-sine shock pulse shall be as indicated on figure 213-1. The velocity change of the pulse shall be within ±10 percent of the velocity change of the desired shock pulse. The velocity change may be determined either by direct measurement, indirectly, or by integrating (graphically or electrically) the area (faired acceleration pulse may be used for the graphical representation) under the measured acceleration pulse. For half-sine acceleration pulses of less than 3 milliseconds duration the following tolerances should apply: The faired maximum value of the measured pulse shall be within ±20 percent of the specified ideal pulse amplitude, its duration shall be within ±15 percent of the specified ideal pulse duration, and the velocity change associated with the measured pulse shall be within ±10 percent of $V_i = 2AD/\pi$. See figure 213-1. The measured pulse will then be considered a nominal half-sine pulse with a nominal amplitude and duration equal to respective values of the corresponding ideal half-sine pulse. The duration of the measured pulse shall be taken as $D_m = D(.1A)/.94$; where D(.1A) is the time between points at .1A for the faired measured acceleration pulse.

3.1.1 The ideal half-sine pulse. An ideal half-sine acceleration pulse is given by the solid curve. See figure 213-1. The measured acceleration pulse must lie within the boundaries given by the broken lines. In addition, the actual velocity change of the shock must be within 10 percent of the ideal velocity change. The actual velocity change can be determined by direct measurements, or from the area under the measured acceleration curve. The ideal velocity change is equal to $V_i = 2AD/\pi$; where A is the acceleration amplitude and D is the pulse duration of the ideal pulse.

3.2 Sawtooth shock pulse. The sawtooth pulse shall be as indicated on figure 213-2. The velocity change of the faired measured pulse shall be within ±10 percent of the velocity change of the ideal pulse.

3.2.1 The ideal terminal-peak sawtooth. An ideal terminal-peak sawtooth acceleration pulse is given by the solid line. See figure 213-2. The measured acceleration pulse must be within the boundaries given by the broken lines. In addition, the actual velocity change of the shock pulse must be within 10 percent of the ideal value. The actual velocity change can be determined from direct measurements, or from the area under the measured acceleration curve. The ideal velocity change is equal to $V_i = PD/2$; where P is the peak value of acceleration, and D is the pulse duration.

4. PROCEDURE. The test specimen shall be mounted as specified in the component specification. Whenever possible, the test load shall be distributed uniformly on the test platform in order to minimize the effects of unbalanced loads.

4.1 Basic design test. Three shocks in each direction shall be applied along the three mutually perpendicular axes of the test specimen (18 shocks). If the test specimen is normally mounted on vibration isolators, the isolators shall be functional during the test. The specified test pulse (half-sine or sawtooth pulse) shall be in accordance with figures 213-1 and 213-2, respectively, and shall have a duration and peak value in accordance with one of the test conditions of table 213-1.

TABLE 213-1. Test condition values.

Test condition	Peak value (g's)	Normal duration (D) (ms)	Waveform	Velocity change (V_i) ft/sec
A	50	11	Half-sine	11.3
B	75	6	Half-sine	9.2
C	100	6	Half-sine	12.3
D	500	1	Half-sine 1/ 2/ 3/	10.2
E	1,000	0.5	Half-sine 1/ 2/ 3/	10.2
F	1,500	0.5	Half-sine 1/ 2/ 3/	15.4
G	50	11	Sawtooth 2/	8.8
H	75	6	Sawtooth 2/	7.2
I	100	6	Sawtooth 2/	9.7
J	30	11	Half-sine	6.8
K	30	11	Sawtooth	5.3

1/ For half-sine shock pulses of less than 3 milliseconds duration, it is not required that the envelope fall within the tolerances specified on figure 213-1. The faired amplitude of the measured pulse shall be within ±20 percent of the ideal amplitude. The measured duration shall be within ±15 percent of the specified amplitude duration. The velocity change of the faired measured pulse shall be within ±10 percent of the ideal pulse. The duration of the pulse shall be measured at the 0.1A point on the pulse. The duration of the pulse shall be the duration measured at the 0.1A point divided by .94. Test conditions D, E, and F are principally applicable to semiconductors.

2/ Test conditions G, H, and I (sawtooth) waveforms are preferred, except for semi- conductors, for which test conditions D, E, and F (half-sine) are preferred.

3/ For test condition D. Where the weight of multi-specimen and fixtures exceeds 150 pounds, there is a question as to whether the shock pulse is properly transmitted to all specimens. Due consideration should be given to the design of the test fixture to assure the proper shock input to each specimen. This also applies to test conditions E and F except that where the weight of the multi-specimen and fixtures exceeds 25 pounds.

5. MEASUREMENTS. Measurements are to be made before and after the required number of shocks unless otherwise specified, and during the test if specified.

6. SUMMARY. The following details are to be specified in the individual specification:

a. Mounting method and accessories (see 2.2.5 and 4).

b. Test condition letter (see 4.1).

c. Measurements before, during, and after the test (see 5).

METHOD 214A

RANDOM VIBRATION

1. PURPOSE. This test is conducted for the purpose of determining the ability of component parts to withstand the dynamic stress exerted by random vibration applied between upper and lower frequency limits to simulate the vibration experienced in various service field environments. Random vibration is characteristic of modern field environments produced by missiles, high-thrust jets and rocket engines. In these types of environments, the random vibration provides a more realistic test. For design purposes, however, a swept frequency sinusoidal test may yield more pertinent design information.

2. APPARATUS.

2.1 Vibration system. The vibration system, consisting of the vibration machine, together with its auxiliary equipment shall be capable of generating a random vibration for which the magnitude has a gaussian (normal) amplitude distribution, except that the acceleration magnitudes of the peak values may be limited to a minimum of three times the rms (three-sigma (σ) limits). The machine shall be capable of being equalized so that the magnitude of its spectral density curve will be between specified limits (for example, see figures 214-1 and 214-2) when the test item, or a substitute equivalent mass, is appropriately secured to the vibration machine. The equalization of an electro-dynamic vibration machine system is the adjustment of the gain of the electrical amplifier and control system so that the ratio of the output vibration amplitude to the input signal amplitude is of a constant value (or given values) throughout the required frequency spectrum.

2.1.1 Control and analysis of vibration.

a. Spectral density curves. The output of the vibration machine shall be presented graphically as power spectral density versus frequency. 1/ The spectral density values shall be within +40 and -30 percent (±1.5 dB) of the specified values between a lower specified frequency and 1,000 Hz, and within +100 and -50 percent (±3 dB) of the specified values between 1,000 and 2,000 Hz. A filter bandwidth will be a maximum of 1/3 octave or a frequency of 25 Hz, whichever is greater.

b. Distribution curves. A probability density distribution curve may be obtained and compared with a gaussian distribution curve. The experimentally obtained curve should not differ from the gaussian curve by more than ±10 percent of the maximum value.

1/ Power spectral density is the mean square value of an oscillation passed by a narrow-band filter per unit filter bandwidth. For this application it is expressed as G^2/f where G^2/f is the mean square value of acceleration expressed in gravitational units per number of cycles of filter bandwidth. The spectral density curves are usually plotted either on a logarithmic scale, or in units of decibels (dB). The number of decibels is defined by the equation:

$$dB = 10 \ \log \frac{G^2/f}{G^2 r/f} = 20 \ \log \frac{G/\sqrt{f}}{G_r/\sqrt{f}}$$

The rms value of acceleration within a frequency band between f_1 and f_2 is:

$$Grms = \left[\int_{f_1}^{f_2} G^2 \ f \ df \right]^{1/2}$$

Where G^2r/f is a given reference value of power spectral density, usually the maximum specified value.

2.2 Monitoring. Monitoring involves measurements of the vibration excitation and of the test item performance. When required in the individual specification, the specimen may be monitored during the test. The details of the monitoring circuit, including the method and points of connection to the specimen, shall be specified.

2.2.1 Vibration input. The vibration magnitude shall be monitored on a vibration machine, on mounting fixtures, at locations that are as near as practical to the test item mounting points. When the vibration input is measured at more than one point, the minimum input vibration shall normally be made to correspond to the specified test curve (see figures 214-1 and 214-2). For massive test items and fixtures, and for large force exciters or multiple vibration exciters, the input-control value may be an average of the average magnitudes of three or more inputs. Accelerations in the transverse direction, measured at the test item attachment points, shall be limited to 100 percent of the applied vibration. The individual specification shall specify the number and location of the test points.

3. METHOD OF MOUNTING. The specimens shall be mounted in accordance with the instructions in the individual specifications. The orientation of the specimen or direction(s) of the applied vibration motion shall be as specified. Any special test fixtures or jigs required to run the test shall be as specified in sufficient detail in the individual specification to assure reproducibility of the input motion applied to the specimen. These details shall include the dimensions, the materials, temper, etc., as applicable.

4. PROCEDURE. The specimen, or substitute equivalent mass, shall be mounted in accordance with 3 and the monitoring equipment attached, if applicable, in accordance with 2.2. The vibration machine shall then be operated and equalized or compensated to deliver the required frequencies and intensities conforming to the curves specified test condition I, figure 214-1, or test condition II, figure 214-2 (see 2.1). If the order of application of the different directions is critical, it also shall be specified in the individual specification. The specimen shall then be subjected to the vibration specified by the test condition letter (see tables 214-I and 214-II) for the duration as specified in the individual specification:

3-minutes; 15-minutes; 1-1/2 hours; or, 8-hours;

In each of three mutually perpendicular directions, and in the order specified as applicable. The measurements made before, during, and after the test shall be made in accordance with 5 and if the specimen shall be monitored during the test, the details shall be as specified in 2.2.

5. MEASUREMENTS. Measurements shall be performed before, during, and after the test as specified in the individual specification.

6. SUMMARY. The following details are to be specified in the individual specification:

a. Monitoring instrumentation, if applicable (see 2.2).

b. The number and location of test points (see 2.2.1).

c. Method of mounting and orientation (see 3).

d. Test condition (I or II); letter (A-K); and duration of test (3-minutes, 15-minutes, 1-1/2 hours, or 8-hours) (see 4).

e. Order of application of vibration direction, if applicable (see 4).

f. Measurements before, during, and after test (see 5).

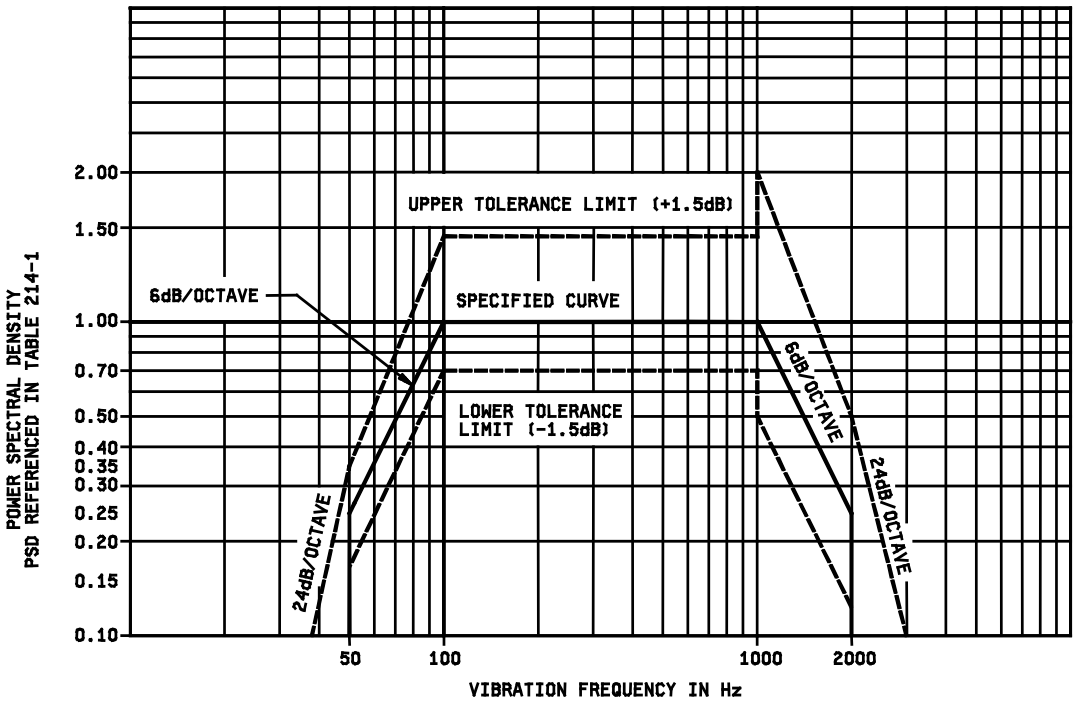

FIGURE 214-1. Test condition I, random vibration test-curve envelope (see table 214-I).

TABLE 214-I. Values for test-condition I. 1/

Characteristics		
Test condition letter	Power spectral density	Overall rms G
A	.02	5.35
B	.04	7.56
C	.06	9.26
D	.1	11.95
E	.2	16.91
F	.3	20.71
G	.4	23.91
H	.6	29.28
J	1.0	37.80
K	1.5	46.30

1/ For duration of test, see 4.

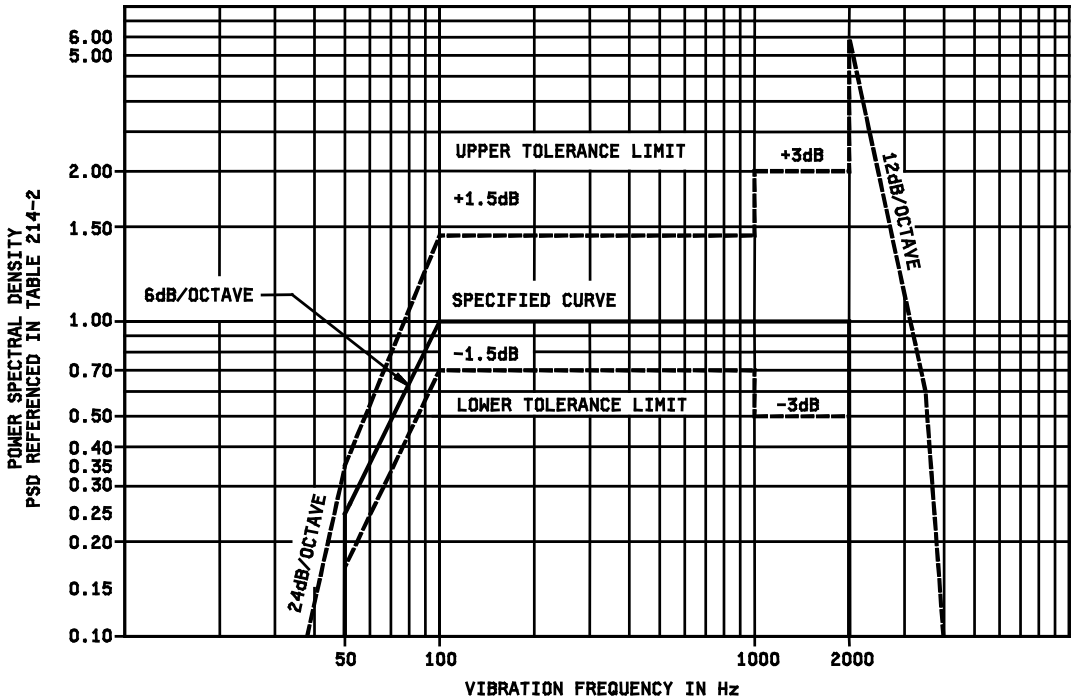

FIGURE 214-2. Test condition II, random vibration test-curve envelope (see table 214-II).

TABLE 214-II. Values for test-condition II. 1/

Characteristics		
Test condition letter	Power spectral density	Overall rms G
A	.02	6.21
B	.04	8.78
C	.06	10.76
D	.1	13.89
E	.2	19.64
F	.3	24.06
G	.4	27.78
H	.6	34.02
J	1.0	43.92
K	1.5	53.79

1/ For duration of test, see 4.

METHOD 215K

RESISTANCE TO SOLVENTS

1. PURPOSE. The purpose of this test is as follows:

a. To verify that markings or color coding will not become illegible or discolored on the parts (including printed wiring boards) when subjected to solvents and processes normally used to clean solder-flux, fingerprints, and other contaminants from printed-wiring and terminal-board assemblies, etc.

b. To verify that component protective coatings and encapsulant materials are not degraded to the point where electrical or mechanical integrity is disturbed when subjected to solvents and processes normally used to clean solder flux, fingerprints, and other contaminants from printed-wiring and terminal-board assemblies, etc.

1.1 Formulation of solvents. The formulation of solvents is considered typical and representative of the solvents used in printed wiring assembly processing of electronic components. Processing conditions are representative of processes used for printed wiring assembly.

1.2 Checks for conflicts. When this test is referenced, care should be exercised to assure that conflicting requirements, as far as the properties of the specified finishes and markings are concerned, are not invoked.

2. MATERIALS

2.1 Solvent solutions. The solvent solutions used in this test shall consist of the following (see table I for summary).

a. A mixture consisting of the following:

1. One part by volume of isopropyl alcohol, American Chemical Society (ACS) reagent grade, or isopropyl alcohol in accordance with TT-I-735, grade A or B, and

2. Three parts by volume of mineral spirits in accordance with MIL-PRF-680, type I, or three parts by volume of a mixture of 80 percent by volume of kerosene and 20 percent by volume ethylbenzene.

b. This solvent has been deleted. When a suitable replacement solvent has been determined, it will be added as solution b.

c. A terpene defluxer consisting of a minimum of 90 percent d-limonene and 10 percent surfactant. 1/

d. A mixture consisting of the following:

1. Forty-two parts by volume water, 1 megohm-cm minimum resistivity.

2. One part by volume of propylene glycol monomethyl ether (glycol ether PM, 1-methoxy-2-propanol).

3. One part by volume of monoethanolamine. 2/

2.1.1 Solvent solutions, safety aspects. Solvent solutions listed in 2.1a through 2.1d exhibit some potential for health and safety hazards. Safety precautions as listed in the appropriate manufacturers material safety data sheet shall be observed.

1/ A commonly used terpene defluxer is BIOACT EC-7R. "BIOACT" is a registered Trademark of Petroferm INC; "EC-7 and EC-7R" are trademarks of Petroferm INC.
2/ Normal safety precaution for handling this solution (e.g., same as those for diluted ammonium hydroxide) based on O.S.H.A. rules for monoethanolamine.

2.2 Vessel. The vessel for solvent immersion shall be a container made of non-reactive material and of sufficient size to permit complete immersion of the specimens in the solvent solutions specified in 2.1.

2.3 Brush. The brush shall be a toothbrush with a handle made of a non-reactive material. The brush shall have three or four long rows, 1 and 1/8 ±1/8 inch in length, of hard bristles. Each row shall contain eight to twelve tufts, the free ends of which shall lie substantially in the same plane. The brush shall be used with a single solvent and when there is any evidence of softening, bending, wear, or loss of bristles, it shall be discarded.

3. PROCEDURE

3.1 Procedure. The specimens subjected to this test shall be divided into three groups of approximately equal size.

a. The first group shall be exposed to the solution specified in 2.1a.

The solution shall be maintained at a temperature of 25°C ±5°C. The specimens shall be completely immersed for 3 minutes +0.5, -0 minutes in the specified solution contained in the vessel specified in 2.2. Immediately following immersion, each specimen shall be tested as follows: The bristle portion of the brush, specified in 2.3, shall be dipped in the solution until wetted and the specimen shall be brushed with normal hand pressure (approximately 2 to 3 ounce force applied normal to the surface) for ten strokes on the portion of the specimen where marking has been applied. The brush stroke shall be directed in a forward direction across the surface of the specimen being tested. Immediately after brushing, the procedure shall be repeated two more times, for a total of three immersions, followed by brushing. After completion of the third immersion and brushing, the specimens shall be air-blown dry. The specimens shall be inspected in accordance with 4.1 and 4.2 to determine the extent, if any, of deterioration that has occurred.

b. This solvent solution has been deleted.

c. The second group shall be exposed to the solution specified in 2.1c.

The solution shall be maintained at a temperature of 25°C ±5°C. The specimens shall be completely immersed for 3 minutes +0.5, -0 minutes in the specified solution contained in the vessel specified in 2.2. Immediately following immersion, each specimen shall be tested as follows: The bristle portion of the brush, specified in 2.3, shall be dipped in the solution until wetted and the specimen shall be brushed with normal hand pressure (approximately 2 to 3 ounce force applied normal to the surface) for ten strokes on the portion of the specimen where marking has been applied. The brush stroke shall be directed in a forward direction across the surface of the specimen being tested. Immediately after brushing, the procedure shall be repeated two more times, for a total of three immersions, followed by brushing. After completion of the third immersion and brushing, the specimens shall be rinsed in approximately 25°C water and all surfaces air-blown dry. The specimens shall be inspected in accordance with 4.1 and 4.2 to determine the extent, if any, of deterioration that has occurred.

d. The third group shall be exposed to the solution specified in 2.1d.

The solution shall be maintained at a temperature of 63°C to 70°C. The specimens shall be completely immersed for 3 minutes +0.5, -0 minutes in the specified solution contained in the vessel specified in 2.2. Immediately following immersion, each specimen shall be tested as follows: The bristle portion of the brush, specified in 2.3, shall be dipped in the solution until wetted and the specimen shall be brushed with normal hand pressure (approximately 2 to 3 ounce force applied normal to the surface) for ten strokes on the portion of the specimen where marking has been applied. The brush stroke shall be directed in a forward direction across the surface of the specimen being tested. Immediately after brushing, the procedure shall be repeated two more times, for a total of three immersions, followed by brushing. After completion of the third immersion and brushing, the specimens shall be rinsed in approximately 25°C water and all surfaces air-blown dry. The specimens shall be inspected in accordance with 4.1 and 4.2 to determine the extent, if any, of deterioration that has occurred.

3.2 Optional exposure procedure for the third group. The test specimens shall be located on a test surface of known area which is located 6 ±1 inches (15 ±2.5 centimeters) below a spray nozzle which discharges .16 ±.005 gpm (0.62 ±0.02 liters per minute) of solution per in^2(6.5 square centimeters) of surface area at a pressure of 20 ±5 lbs/in^2 (138 ±34 kilopascal). The solvent shall be held at a temperature range of 63°C to 70°C. The specimens shall be subjected to this spray for a period of 10 minutes. After completion of the spray exposure, the specimens shall be thoroughly rinsed in water and all surfaces air-blown dry and inspected in accordance with 4.1 and 4.2 to determine the extent, if any, of deterioration that has occurred. If this optional procedure is specified, brushing of the samples in the third group is not required. If a conflict arises from the use of the spray option, the brush method of 3.1d shall be used as the referee procedure. The measurements shown in parentheses are not exact equivalents and are shown for convenience only.

3.3 Immersion test for components with marking protected by a sleeve material. Components with a protective sleeve shall be divided into three groups as specified in 3, and each group shall be subjected to testing using the solution defined for that group. Each solution shall be maintained at a temperature of 25°C ±5°C, except the solution in 2.1d shall be maintained at a temperature of 63°C to 70°C. The specimens shall be completely immersed for 3 minutes +.5, -0 minutes in the specified solution contained in the vessel specified in 2.2. Immediately following immersion, each specimen shall be tested as follows: The bristle portion of the brush specified in 2.3 shall be dipped in the solution until wetted and the specimen shall be brushed with normal hand pressure (approximately 2 to 3 ounce force applied normal to the surface) for ten strokes on the sleeve directly above the area of the marking. Immediately after brushing, the procedure shall be repeated two more times for a total of three immersions followed by brushing. The brush stroke shall be directed in a forward direction across the sleeve area above the marking. After completion of the third immersion and brushing, the specimens shall be air-blown dry. The specimens shall be inspected in accordance with 4.1 and 4.2 to determine the extent, if any, of deterioration that has occurred, including the sleeve.

3.4 Open construction parts and parts not intended for PCB mounting. Parts of open construction which are susceptible to internal damage by immersion in solvents and parts not intended for mounting on printed circuit boards, shall be divided into three groups as specified in 3, and each group shall be subjected to testing using the solution defined for that group. Each solution shall be maintained at a temperature of 25°C ±5°C, except for the solution in 2.1d, which shall be maintained at a temperature range of 63°C to 70°C, and shall be contained in the vessel specified in 2.2. Each group shall be tested as follows: The bristle portion of the brush specified in 2.3 shall be immersed in the respective solution for each group until wetted. The marking area of the specimen to be tested shall then be immediately brushed with normal hand pressure (approximately 2 to 3 ounce force applied normal to the surface) for ten strokes on the portion of the specimen where marking has been applied (test area not to exceed one-half inch square). The brush stroke shall be directed in a forward direction across the marked surface. This test shall be repeated twice for a total of three times for each specimen. The specimens shall then be inspected in accordance with 4.1 and 4.2 to determine the extent of deterioration, if any.

4. EXAMINATION AND MEASUREMENTS

4.1 Marking resistance to solvents. After subjection to the test, any specified markings which are missing in whole or in part, faded, smeared, blurred, or shifted (dislodged) to the extent that they cannot be readily identified from a distance of at least 6 inches with normal room lighting without the aid of magnification or with a viewer having a magnification no greater than 3X shall constitute failure.

4.2 Component protective coating, encapsulation material and sleeve material resistance. After subjection to the test, the specimen shall be examined for cracks, separations, crazing, swelling, softening, and degradation of body material, end caps and seals if present, or any other damage or degradation that has occurred due to solvent exposure and which effects the mechanical integrity or reliability shall constitute a failure. The examination shall be made with a viewer having a magnification of 10X maximum.

5. SUMMARY. The following details are to be specified in the individual specification:

a. The number of specimens to be tested.

b. Optional procedure for the third group allowed (see 3.2).

TABLE I. Summary table for resistance to solvents.

Solvent 1	Solvent 2	Solvent 3	Solvent 4
1 part (by volume) of isopropyl alcohol (ACS) reagent grade or TT-I-735, grade A or B and 3 parts (by volume) of mineral spirits per MIL-PRF-680, type I, or three parts (by volume) of a mixture of 80% (by volume) of kerosene and 20% (by volume) ethylbenzene.	This solvent has been deleted.	Terpene defluxer	42 parts (by volume) of water 1 part (by volume) of propylene glycol monomethyl ether 1 part (by volume) of monoethanolamine
Immersion 3 +.5, -0 minutes, 25°C ±5°C		Immersion 3 +.5, -0 minutes, 25°C, ±5°C	Immersion 3 +.5, -0 minutes, 63°C to 70°C
Brush 10 strokes (wet bristle) 2 to 3 oz.		Brush 10 strokes (wet bristle) 2 to 3 oz.	Brush 10 strokes (wet bristle) 2 to 3 oz.
Immersion 3 +.5, -0 minutes, 25°C ±5°C.		Immersion 3 +.5, -0 minutes, 25°C ±5°C.	Immersion 3 +.5, -0 minutes, 63°C to 70°C.
Brush 10 strokes (wet bristle) 2 to 3 oz.		Brush 10 strokes (wet bristle) 2 to 3 oz.	Brush 10 strokes (wet bristle) 2 to 3 oz.
Immersion 3 +.5, -0 minutes, 25°C ±5°C.		Immersion 3 +.5, -0 minutes, 25°C ±5°C.	Immersion 3 +.5, -0 minutes, 63°C to 70°C.
Brush 10 strokes (wet bristle) 2 to 3 oz.		Brush 10 strokes (wet bristle) 2 to 3 oz.	Brush 10 strokes (wet bristle) 2 to 3 oz.
		Rinse in water	Rinse in water.
Air blow dry.		Air blow dry	Air blow dry.
Inspect at 3X maximum for marking. Inspect at 10X maximum for part damage.		Inspect at 3X maximum for marking. Inspect at 10X maximum for part damage.	Inspect at 3X maximum for marking. Inspect at 10X maximum for part damage.

METHOD 216

RESISTANCE TO SOLDER WAVE HEAT

NOTICE

Method 216 has been canceled effective 16 April 1973. Use the test conditions in method 210 in lieu of the test conditions of method 216. Use the table below for the applicable cross reference.

When method 216 is specified	Use method 210
Test condition A Test condition B Test condition C	Test condition C Test condition D Test condition E

METHOD 217A

PARTICLE IMPACT NOISE DETECTION (PIND)

1. PURPOSE. The purpose of this test is to detect the presence of free moving particulate contaminants within sealed cavity devices. This test method is specifically directed toward relays and other devices where internal mechanism noise makes rejection exclusively by threshold level impractical. This test method also may be used prior to final sealing in the manufacturing sequence as a means of eliminating loose particles from the interior of the device.

2. APPARATUS. The basic PIND system is comprised of the following components: (Substitutions of individual units or complete system may be made providing the test requirements of paragraph 3 are met.)

a. Vibration power source consisting of electrical driver audio oscillator and low frequency audio amplifier.

b. Ultrasonic sound detection system consisting of a crystal transducer with frequency response of 36 kHz - 44 kHz and associated translator preamplifier capable of converting transducer output to 20 Hz - 5 kHz.

c. Small vibration shaker or two shakers coupled together.

d. Oscilloscope, single beam, with 100 kHz minimum bandwidth capable of external synchronization.

e. Audio speaker or headset.

f. Test fixture to adapt transducer to shaker head and isolate it from external noise sources.

g. Holding fixture designed to hold flat surface of unit under test firmly against the sensing surface of the transducer.

h. Shock test fixture (see figure 217-3).

i. Calibration unit per 3.1c.

j. Random vibration generator.

3. PROCEDURE. Test equipment shall be assembled as shown on figure 217-1. System calibration, as defined in 3.1b, shall be performed at the following intervals:

a. Each time equipment is turned on.

b. Each change of operators.

c. At initial and completion of test for each group of devices.

d. Every four hours throughout testing.

Whenever system sensitivity is found to be below specified minimum, all units tested subsequent to previous acceptable calibration shall be retested. Units rejected for particle noise shall not be reworked or retested for the purpose of acceptance. Units rejected for excessive mechanism noise may be retested for the purpose of eliminating the mechanism noise.

3.1 Calibration.

a. Each unit of test equipment subject to calibration shall be maintained in accordance with NCSL Z540.3.

b. System calibration shall consist of verifying the proper oscilloscope pattern while calibration unit is being energized by the shaker head at the frequency and acceleration specified in 3.2. Calibration shall also include elimination of extraneous noise which interferes with proper performance of the test.

c. Test the system with a container (size approximately ½" (12.7 mm) X 1" (25.4 mm) X 1" (25.4 mm) or smaller) which contains a 60/40 solder ball with a diameter of 0.005''. Listen to the audible sound and observe the oscilloscope response to the solder ball.

d. Test the system with a container (size approximately 1/2" (12.7 mm) X 1" (25.4 mm) X 1" (25.4 mm) or smaller) which contains no particle, and compare the audible sound and the oscilloscope response to the results of step c to insure that particles are detectable.

3.2 Test setup. The area in which the PIND system is used shall be carefully selected to avoid external interference from electrical and mechanical noise which will decrease the effectiveness of the test.

a. Set audio oscillator to 27 ±1 Hz.

b. Adjust audio amplifier to produce 3-5g (.07" (1.78 mm) - .14" (3.56 mm) displacement) at shaker head.

c. Check mechanical and electrical systems to minimize background noise. Background noise shall not increase more than 3 dB when shaker is placed in operation (except shaker reversal noise) and total system noise shall not exceed 20 mV. Adjust oscilloscope trace to less than 4 divisions displacement and center shaker reversal noise as shown on figure 217-2a. No other noise spikes shall be detectable.

d. Adjust audio output to comfortable level.

e. With calibration unit mounted on shaker verify proper oscilloscope and system sensitivity to produce random noise spikes of 40 mV minimum (figure 217-2c).

3.3 Test procedure.

3.3.1 Degausing. Devices not incorporating permanent magnets and devices being tested prior to final magnetization shall be degaused prior to PIND testing.

3.3.2 Lead protection. When a device incorporates relatively long and flexible leads, the leads shall be suitably restrained from striking the shaker/fixture or striking each other during test. Care shall be taken to prevent damage caused by resonance.

3.3.3 Testing. Mount unit under test in the center of acoustic transducer with largest flat surface down (paragraph 4b). Energize shaker and monitor for visual and audible evidence of loose internal material as evidenced by nonperiodic noise spikes (figure 217-2c). A single burst of noise is cause for rejection whether or not the indication can be repeated.

Allow test to proceed for approximately 5 seconds. If no failure is detected, apply a random acceleration for 3 seconds maximum or 3 to 5 shock pulses (not to exceed the rating of the device) perpendicular to the axis of vibration (see figure 217-3). Monitor for 5 seconds then repeat random vibration or shocks and monitor for an additional 5 seconds (30 seconds maximum per axis).

NOTE: If excessive mechanism noise occurs (figure 217-2d) such that particle noise would be undetectable, the following action may be taken to reduce the noise:

a. Reorient unit by rotation about the shaker axis.

b. Change shaker amplitude within the specified limits.

c. Tilt shaker axis off vertical in any direction (not exceeding 30°) to provide a gravitational side component to the shaker acceleration.

d. With approval of the procuring agency, a different test frequency may be established for a given device.

e. Cancel out periodic noise.

If no particle is detected rotate unit to another flat surface providing vibration in a different axis. Repeat above test for not to exceed 30 seconds. Units shall not be tested with terminals or other non-cavity portions of the assembly in contact with the transducer.

3.3.4 Marking. If specified (see 4d), those units which successfully pass PIND test shall be marked "PIND" on any surface providing existing markings are not obscured.

3.3.5 Failed units. Those units which exhibit either particle noise or excessive mechanism noise which cannot be eliminated as described in 3.3.3 shall be rejected from the lot.

4. SUMMARY. The following details are to be specified in the individual specification:

a. Test frequency and acceleration if other than specified.

b. Axes of vibration if other than specified.

c. Test duration if other than specified.

d. Test acceptance marking if specified.

e. Frequency and magnitude of random noise generator shall be specified.

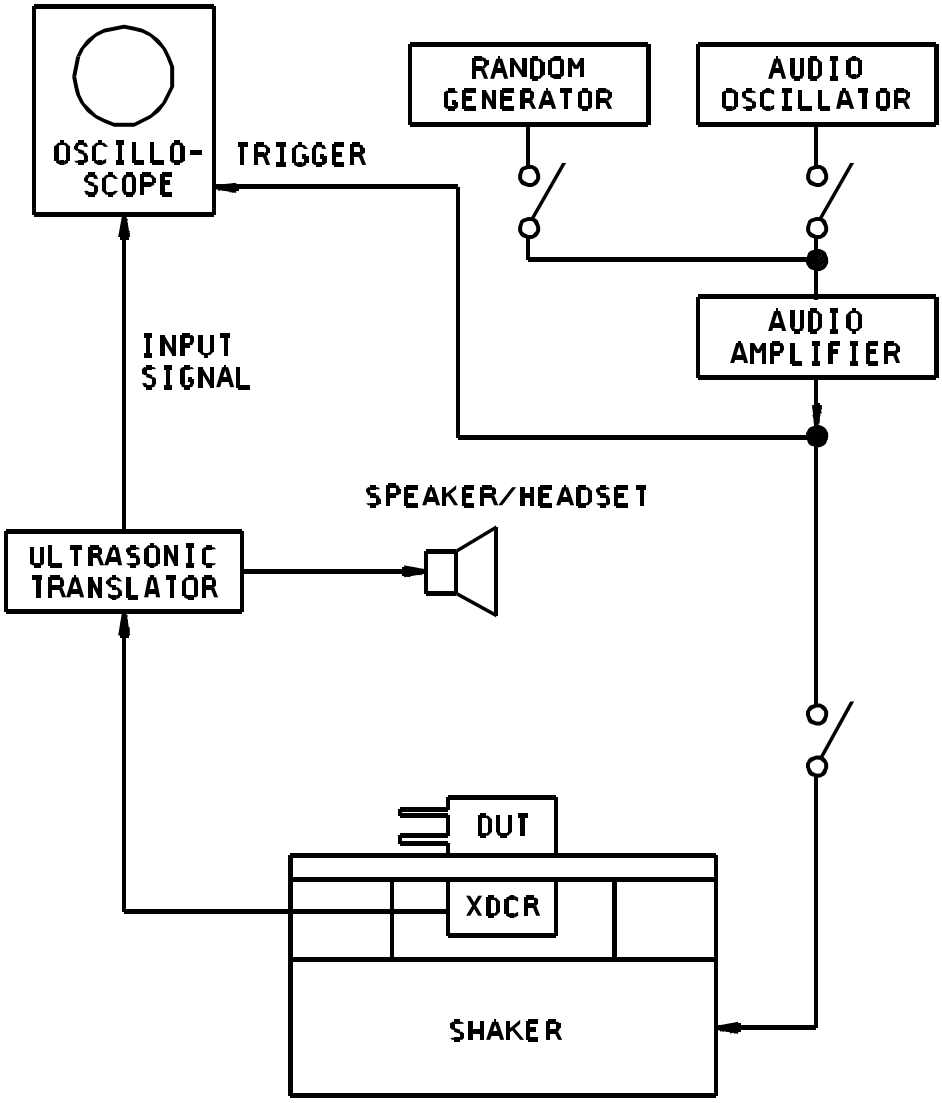

FIGURE 217-1. Typical test circuit.

ACCEPTANCE CRITERIA: Each unit tested shall meet the acceptance.

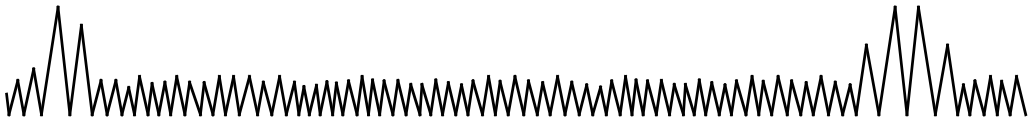

SHAKER NOISE
Timebase adjusted to locate shaker reversal noise bursts at ends of oscilloscope trace. Test unit not mounted. a

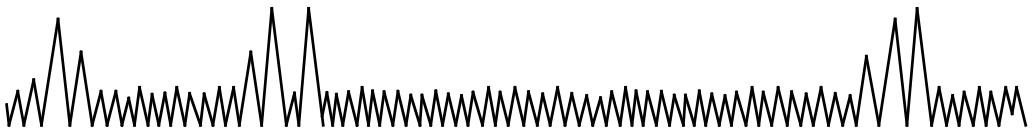

INHERENT MECHANICAL NOISE
Synchronized spike may appear at different locations on time base for each unit under test. b

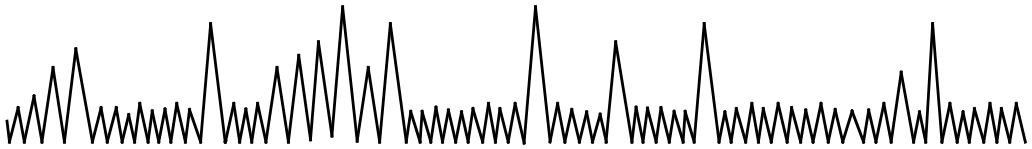

PARTICULATE NOISE
Non-synchronized spikes of any magnitude appear randomly and may disappear as test progresses. Unit is rejectable. c

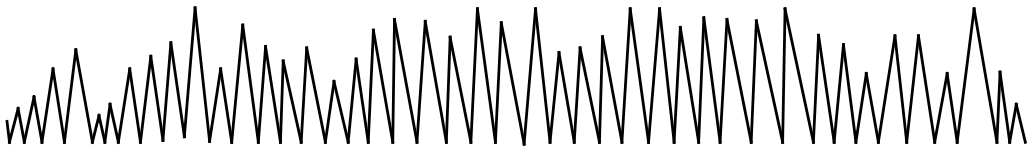

EXCESSIVE MECHANICAL NOISE
Synchronized trace masks more than 50% of oscilloscope trace. Unit is rejectable. d

FIGURE 217-2. Representative oscilloscope traces.

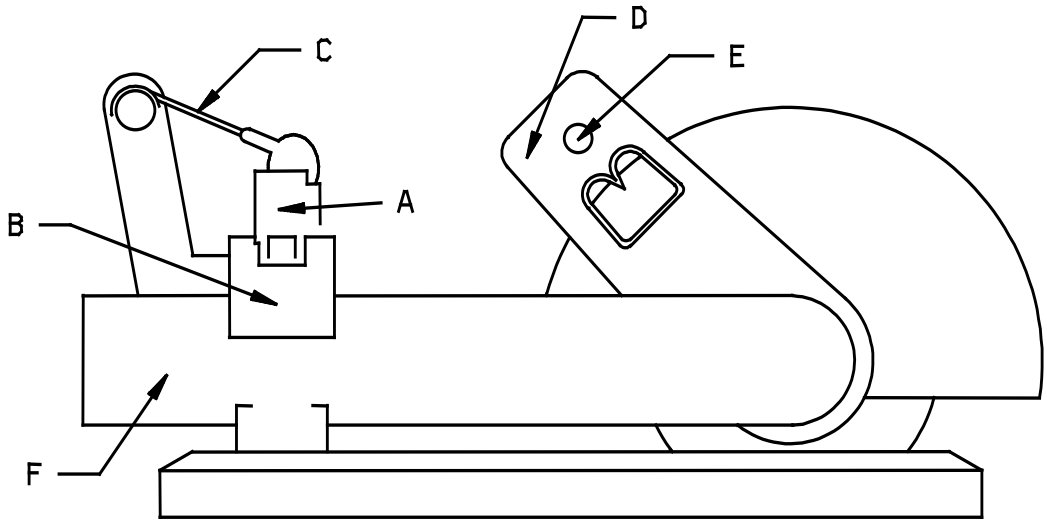

A. Unit under test.
B. Holding fixture.
C. Holding spring.
D. Angle indicator and adjustment.
E. Holding and dropping pin.
F. Dropping arm.

FIGURE 217-3. Shock test fixture.

CLASS 300

ELECTRICAL-CHARACTERISTICS TESTS

METHOD 301

DIELECTRIC WITHSTANDING VOLTAGE

1. PURPOSE. The dielectric withstanding voltage test (also called high-potential, over potential, voltage-breakdown, or dielectric-strength test) consists of the application of a voltage higher than rated voltage for a specific time between mutually insulated portions of a component part or between insulated portions and ground. This is used to prove that the component part can operate safely at its rated voltage and withstand momentary overpotentials due to switching, surges, and other similar phenomena. Although this test is often called a voltage breakdown or dielectric-strength test, it is not intended that this test cause insulation breakdown or that it be used for detecting corona, rather, it serves to determine whether insulating materials and spacing in the component part are adequate. When a component part is faulty in these respects, application of the test voltage will result in either disruptive discharge or deterioration. Disruptive discharge is evidenced by flashover (surface discharge), sparkover (air discharge), or breakdown (puncture discharge). Deterioration due to excessive leakage currents may change electrical parameters or physical characteristics.

1.1 Precautions. The dielectric withstanding voltage test should be used with caution particularly in inplant quality conformance testing, as even an overpotential less than the breakdown voltage may injure the insulation and thereby reduce its safety factor. Therefore, repeated application of the test voltage on the same specimen is not recommended. In cases when subsequent application of the test potential is specified in the test routine, it is recommended that the succeeding tests be made at reduced potential. When either alternating-current (ac) or direct-current (dc) test voltages are used, care should be taken to be certain that the test voltage is free of recurring transients or high peaks. Direct potentials are considered less damaging than alternating potentials which are equivalent in ability to detect flaws in design and construction. However, the latter are usually specified because high alternating potentials are more readily obtainable. Suitable precautions must be taken to protect test personnel and apparatus because of the high potentials used.

1.2 Factors affecting use. Dielectric behavior of gases, oils, and solids is affected in various degrees by many factors, such as atmospheric temperature, moisture, and pressure; condition and form of electrodes; frequency, waveform, rate of application, and duration of test voltage; geometry of the specimen; position of the specimen (particularly oil-filled components); mechanical stresses; and previous test history. Unless these factors are properly selected as required by the type of dielectric, or suitable correction factors can be applied, comparison of the results of individual dielectric withstanding voltage tests may be extremely difficult.

2. APPARATUS

2.1 High voltage source. The nature of the potential (ac or dc) shall be as specified. When an alternating potential is specified, the test voltage provided by the high voltage source shall be nominally 60 hertz in frequency and shall approximate, as closely as possible, a true sine wave in form. Other commercial power frequencies may be used for inplant quality conformance testing, when specified. All alternating potentials shall be expressed as root-mean-square values, unless otherwise specified. The kilovolt-ampere rating and impedance of the source shall be such as to permit operation at all testing loads without serious distortion of the waveform and without serious change in voltage for any setting. When the test specimen demands substantial test source power capacity, the regulation of the source shall be specified. When a minimum kilovoltampere rating is required, it shall be specified. When a direct potential is specified, the ripple content shall not exceed 5 percent rms of the test potential. When required, a suitable current-limiting device shall be used to limit current surges to the value specified.

2.2 Voltage measuring device. A voltmeter shall be used to measure the applied voltage to an accuracy of at least 5 percent, unless otherwise specified. When a transformer is used as a high voltage source of alternating potential, a voltmeter connected across the primary side or across a tertiary winding may be used provided it is previously determined that the actual voltage across the test specimen will be within the allowable tolerance under any normal load condition.

2.3 Leakage current measuring device. When any leakage current requirement is specified, a suitable method shall be used to measure the leakage current to an accuracy of at least 5 percent of the specified requirement.

2.4 Fault indicator. Suitable means shall be provided to indicate the occurrence of disruptive discharge and leakage current in case it is not visually evident in the specimen. The voltage measuring device of 2.2, the leakage current measuring device of 2.3, or an appropriate indicator light or an overload protective device may be used for this purpose.

3. PROCEDURE

3.1 Preparation. When special preparations or conditions such as special test fixtures, reconnections, grounding, isolation, or immersion in water are required, they shall be specified.

3.2 Test voltage. Specimens shall be subjected to a test voltage of the magnitude and nature (ac or dc) specified.

3.3 Points of application. The test voltage shall be applied between mutually insulated portions of the specimen or between insulated portions and ground as specified. The method of connection of the test voltage to the specimen should be specified only when it is a significant factor.

3.4 Rate of application. The test voltage shall be raised from zero to the specified value as uniformly as possible, at a rate of approximately 500 volts (rms or dc) per second, unless otherwise specified. At the option of the manufacturer, the test voltage may be applied instantaneously during inplant quality conformance testing.

3.5 Duration of application. Unless otherwise specified, the test voltage shall be maintained at the specified value for a period of 60 seconds for qualification testing. For inplant quality conformance testing, when specified, reduced time with a possible correlated higher test voltage may be used. Specimens with movable parts shall be tested as specified, in a manner to assure that repeated stresses are not applied to the same dielectric. Upon completion of the test, the test voltage shall be gradually reduced to avoid surges. At the option of the manufacturer, the test voltage may be removed instantaneously during inplant quality conformance testing.

3.6 Examination and measurement of specimen. During the dielectric withstanding voltage test, the fault indicator shall be monitored for evidence of disruptive discharge and leakage current. Following this, the specimen shall be examined and measurements shall be performed to determine the effect of the dielectric withstanding voltage test on specific operating characteristics, when specified.

4. SUMMARY. The following details are to be specified in the individual specification:

a. Special preparations or conditions, if required (see 3.1).

b. Magnitude of test voltage (see 3.2).

(1) Test voltage, and duration for inplant quality conformance testing, if different than for qualification testing (see 3.5).

c. Nature of potential (ac or dc) (see 2.1).

d. Duration of application of test voltage for qualification testing if other than 60 seconds (see 3.5).

e. Points of application of test voltage (see 3.3).

(1) Method of testing specimens with movable parts (see 3.5).

f. Method of connection of test voltage to specimen, if significant (see 3.3).

g. Regulation, when applicable (see 2.1).

h. Minimum kilovolt-ampere rating of high voltage source, if required. (see 2.1).

i. Limiting value of surge current, if applicable (see 2.1).

j. Maximum leakage current requirement, if applicable (see 2.3).

k. Measurements after dielectric withstanding voltage test, if required (see 3.6).

METHOD 302

INSULATION RESISTANCE

1. PURPOSE. This test is to measure the resistance offered by the insulating members of a component part to an impressed direct voltage tending to produce a leakage of current through or on the surface of these members. A knowledge of insulation resistance is important, even when the values are comparatively high, as these values may be limiting factors in the design of high-impedance circuits. Low insulation resistances, by permitting the flow of large leakage currents, can disturb the operation of circuits intended to be isolated, for example, by forming feedback loops. Excessive leakage currents can eventually lead to deterioration of the insulation by heating or by direct-current electrolysis. Insulation resistance measurements should not be considered the equivalent of dielectric withstanding voltage or electric breakdown tests. A clean, dry insulation may have a high insulation resistance, and yet possess a mechanical fault that would cause failure in the dielectric withstanding voltage test. Conversely, a dirty, deteriorated insulation with a low insulation resistance might not break down under a high potential. Since insulating members composed of different materials or combinations of materials may have inherently different insulation resistances, the numerical value of measured insulation resistance cannot properly be taken as a direct measure of the degree of cleanliness or absence of deterioration. The test is especially helpful in determining the extent to which insulating properties are affected by deteriorative influences, such as heat, moisture, dirt, oxidation, or loss of volatile materials.

1.1 Factors affecting use. Factors affecting insulation resistance measurements include temperature, humidity, residual charges, charging currents of time constant of instrument and measured circuit, test voltage, previous conditioning, and duration of uninterrupted test voltage application (electrification time). In connection with this last-named factor, it is characteristic of certain components (for example, capacitors and cables) for the current to usually fall from an instantaneous high value to a steady lower value at a rate of decay which depends on such factors as test voltage, temperature, insulating materials, capacitance, and external circuit resistance. Consequently, the measured insulation resistance will increase for an appreciable time as test voltage is applied uninterruptedly. Because of this phenomenon, it may take many minutes to approach maximum insulation resistance readings, but specifications usually require that readings be made after a specified time, such as 1 or 2 minutes. This shortens the testing time considerably while still permitting significant test results, provided the insulation resistance is reasonably close to steady-state value, the current versus time curve is known, or suitable correction factors are applied to these measurements. For certain components, a steady instrument reading may be obtained in a matter of seconds. When insulation resistance measurements are made before and after a test, both measurements should be made under the same conditions.

2. APPARATUS. Insulation resistance measurements shall be made on an apparatus suitable for the characteristics of the component to be measured such as a megohm bridge, megohm-meter, insulation resistance test set, or other suitable apparatus. Unless otherwise specified, the direct potential applied to the specimen shall be that indicated by one of the following test condition letters, as specified:

Test condition	Test potential
A	100 volts ±10%
B	500 volts ±10%
C	1,000 volts ±10%

For inplant quality conformance testing, any voltage may be used provided it is equal to or greater than the minimum potential allowed by the applicable test condition. Unless otherwise specified, the measurement error at the insulation resistance value required shall not exceed 10 percent. Proper guarding techniques shall be used to prevent erroneous readings due to leakage along undesired paths.

3. PROCEDURE. When special preparations or conditions such as special test fixtures, reconnections, grounding, isolation, low atmospheric pressure, humidity, or immersion in water are required, they shall be specified. Insulation resistance measurements shall be made between the mutually insulated points or between insulated points and ground, as specified. When electrification time is a factor, the insulation resistance measurements shall be made immediately after a 2 minute period of uninterrupted test voltage application, unless otherwise specified. However, if the instrument reading indicates that an insulation resistance meets the specified limit, and is steady or increasing, the test may be terminated before the end of the specified period. When more than one measurement is specified, subsequent measurements of insulation resistance shall be made using the same polarity as the initial measurements.

4. SUMMARY. The following details are to be specified in the individual specification:

a. Test condition letter, or other test potential, if required (see 2).

b. Special preparations or conditions, if required (see 3).

c. Points of measurement (see 3).

d. Electrification time, if other than 2 minutes (see 3).

e. Measurement error at the insulation resistance value required, if other than 10 percent (see 2).

METHOD 303A

DC RESISTANCE

1. PURPOSE. The purpose of this test is to measure the direct-current (dc) resistance of resistors, electromagnetic windings of components, and conductors. It is not intended that this test apply to the measurement of contact resistance.

1.1. Precautions. The temperature at which the dc resistance measurement is made will affect the final value of resistance. In addition, resistance values may vary with the measuring voltage.

2. PROCEDURE. DC resistance shall be measured with a resistance bridge or other suitable test equipment. The limit of error in the bridge or other test equipment shall not exceed one-tenth of the specified tolerance on the measured resistance (for example, the limit of error in the bridge or other test equipment shall not exceed ± 0.5 percent if the specified tolerance on the measured resistance is ± 5 percent), unless otherwise specified. For inplant quality conformance testing, the accuracy of the measurement shall be such to insure that the resistance value is within the required tolerance. If a plus or minus tolerance is not specified, the limit of error in the bridge or other test equipment shall not exceed ± 2 percent. The test current through the specimen shall be as small as practical considering the sensitivity of the indicating instruments, unless the test current or voltage is specified. When it is important that the temperature of the specimen shall not rise appreciably during the measurement, the test voltage shall be applied uninterruptedly for as short a time as practicable, but in no case for more than 5 seconds, unless otherwise specified. Unless otherwise specified, the measurement shall be made at a temperature of 25°C ± 5°C. In the case of measurement dispute, dc resistance measurements shall be made at or corrected to 25°C.

3. SUMMARY. The following details are to be specified in the individual specification:

a. Limit of error of measuring apparatus, if other than one-tenth of specified tolerance (see 2).

b. Test voltage or current, if applicable (see 2).

c. Maximum period of uninterrupted test-voltage application, if other than 5 seconds (see 2).

d. Test temperature, if other than that specified (see 2).

METHOD 304

RESISTANCE-TEMPERATURE CHARACTERISTIC

1. PURPOSE. It is the purpose of this test to determine the percentage change in direct-current (dc) ohmic resistance from the dc ohmic resistance at the reference temperature, per unit temperature difference between the test temperature and the reference temperature. The equation (see 3) used to calculate this characteristic, commonly called the "temperature coefficient of resistance", is based on an assumed straight-line relationship between resistance and temperature over a range of specified test temperatures.

2. PROCEDURE.

2.1 Preparation. Test leads used to connect the specimens to the resistance-measuring devices shall be firmly fastened to the specimens. Precautions shall be taken to minimize errors in resistance measurement due to such factors as lead resistance, spurious electromotive forces, condensation of moisture, etc., throughout the range of test temperatures, by utilization of suitable test-lead materials and measurement techniques or by applying appropriate corrections.

2.2 Test temperatures. The reference temperature shall be 25°C or as specified. There shall be two standard series of test temperatures. The first series shall be 25°, 0°, -15°, and -55°C; the second series shall be 25°, 50°, 75°, 100°, 125°, 200°, 275°, and 350°C. The tolerance on each temperature in both series shall be ±3°C. The lowest test temperature in the first series, and the highest test temperature in the second series, shall be as specified. Measurements for each series of temperatures shall be performed in the order shown without interruption. However, a lapse of time not to exceed 24 hours is permitted between the end of the first series and the start of the second series.

2.3 Measurements. The resistance of each specimen shall be measured 30 to 45 minutes after the chamber temperature has become stable to within ±0.5°C at a test temperature. However, it will be permissible to measure the resistance before the end of this period if the resistance has become stable to within ±0.1 percent as determined by preliminary measurements made at 5 minute intervals after stabilization of the chamber temperature. Unless otherwise specified, the temperature at the time of measurement shall be measured to an accuracy of ±1 percent of the temperature difference between the nominal test temperature and the nominal reference temperature +0.5°C. Resistance measurements shall be made in accordance with method 303 of this standard.

3. RESULTS. The resistance-temperature characteristic, in percent change in resistance per degree centigrade, at each test temperature shall be computed as follows:

$$\textit{Resistance - temperature characteristic} = \frac{R_2 - R_1}{R_1 (t_2 - t_1)} \times 100$$

Where:
R_1 = resistance at reference temperature (in same series as test temperature) in ohms.
R_2 = resistance at test temperature in ohms.
t_1 = reference temperature in degrees celsius.
t_2 = test temperature in degrees celsius.

4. SUMMARY. The following details are to be specified in the individual specification:

a. Reference temperature, if other than that specified (see 2.2).

b. Lowest and highest test temperature (see 2.2).

c. Accuracy of temperature measurement if other than that specified (see 2.3).

METHOD 305A

CAPACITANCE

1. PURPOSE. The purpose of this test is to measure the capacitance of component parts. Preferred test frequencies for this measurement are 60 Hz, 100 Hz, 120 Hz, 1 kHz, 100 kHz, and 1 MHz.

2. PROCEDURE. The capacitance of the specimen shall be measured with a capacitance bridge or other suitable method at the frequency specified. Unless otherwise specified, the measurement shall be made at a temperature of 25°C ± 5°C. In the case of measurement dispute, capacitance measurements shall be made at or corrected to 25°C. The inherent accuracy of the measurement shall be ±(0.5 percent +0.2 picofarad) unless otherwise specified. Suitable measurement technique shall be used to minimize errors due to the connections between the measuring apparatus and the specimen. The alternating-current (ac) voltage actually impressed across the specimen shall be as low as practicable. When a direct-current (dc) polarizing voltage is required, it shall be as specified and shall exceed the peak ac voltage impressed across the specimen; however, the sum of the peak ac and the dc voltages shall not exceed the voltage rating of the specimen.

SUMMARY. The following details are to be specified in the individual specification:

a. Test frequency (see 2).

b. Test temperature, if other than that specified (see 2).

c. Limit of accuracy, if other than that specified (see 2).

d. Magnitude of polarizing voltage, if applicable (see 2).

e. Magnitude of AC rms test signal, if applicable (see 2).

METHOD 306

QUALITY FACTOR (Q)

1. PURPOSE. The purpose of this test is to measure the quality factor, commonly called Q, of electronic parts such as capacitors and inductors. By definition, the factor Q expresses the ratio of reactance to effective resistance of a circuit element. This numerical ratio is considered a "figure of merit" for a reactive component (or a resonant circuit utilizing such components) as it is a measure of the ability of the component (or circuit) to store energy compared to the energy it wastes. For this reason, Q is called "storage factor". Q is thus equal to the inverse of the dissipation factor. Relationship also exists between Q and the properties of a tuned circuit, such as the resonant rise in voltage phenomena. Each of the relationships involving Q mentioned above can be applied to the direct or indirect measurement of Q.

2. PROCEDURE. The quality factor or Q of the specimen shall be measured using a suitable instrument providing an accuracy of measurement within 10 percent of the specified value of Q. Measurements shall be made at the specified frequency. Suitable measurement techniques shall be used to minimize errors due to the connections between the measuring apparatus and the specimen.

3. SUMMARY. The following detail is to be specified in the individual specification:

a. Test frequency (see 2).

METHOD 307

CONTACT RESISTANCE

1. PURPOSE. The purpose of the contact resistance test is to determine the resistance offered to a flow of current during its passage between the electrical contacting surfaces of connecting components, such as plugs, jacks, connectors, and sockets, or between the electrical contacts of current controlling components, such as switches, relays, and circuit breakers. For practical reasons, lead and terminal resistances may be included in the actual measurement, as well as the contact resistance proper. In many applications it is required that the contact resistance be low and stable, so that the voltage drop across the contacts does not affect the accuracy of the general circuit conditions. If large currents are passed through high resistance contacts, excessive energy losses and dangerous overheating of the contacts may occur.

1.1 Precautions. Contact resistance values between two contacting surfaces are influenced by such factors as the resistivities of the surface materials; contact pressure; area; shape; condition (including relative cleanliness, smoothness, and hardness) of surfaces; current; open circuit voltage appearing at the contacts during interruption of current; temperature; and thermal conductivity of leads. These factors should be considered in designing test jigs or clamps, or in performing contact resistance measurements. Contact resistances are usually measured by a 4-terminal procedure, using a Kelvin bridge, or by the voltmeter-ammeter method. The test current used is usually the maximum rated current for the contacting surfaces involved. In measuring contact resistance, it is important to keep the specimen free from vibration, and to prevent changes in normal contact pressure which might result from improper application of test jigs or clamps.

2. PROCEDURE. The resistance of the contacts may be measured directly using a Kelvin bridge, or indirectly using the voltmeter-ammeter method, ammeter-potentiometer method, or other suitable means. The maximum allowable measurement error shall be 5 percent. The point of measurement shall be the point at which the external leads are normally connected to the terminals. Connections between the specimens and the measuring apparatus shall be made as specified, using suitable connecting jigs or clamps, where required. The magnitude of direct current to be passed through the contacts during the measurement and, when necessary, the maximum open circuit test voltage shall be as specified. A series resistor may be used provided the specified open circuit test voltage is not exceeded. The number of activations to cleanse the contacts prior to measurement, the number of test activations, and the number of measurements per activations to be made on each contact shall be as specified.

3. SUMMARY. The following details are to be specified in the individual specification:

a. Method of connection (see 2).

b. Test current (see 2).

c. Maximum open circuit test voltage, if applicable (see 2).

d. Number of activations prior to measurement (see 2).

e. Number of test activations (see 2).

f. Number of measurements per activation (see 2).

METHOD 308

CURRENT-NOISE TEST FOR FIXED RESISTORS

1. PURPOSE. This resistor noise test method is performed for the purpose of establishing the "noisiness" or "noise quality" of a resistor in order to determine its suitability for use in electronic circuits having critical noise requirements. This method is intended as a standard reference for the determination of current noise present in a resistor, for use in an application with specific current-noise requirements. It is not intended as a general specification requirement. Interference caused by the generation of spurious noise signals in parts tends to mask the desired output signal, thus resulting in loss of information. For low-level audio frequency and other low-frequency circuits, where low-noise parts are used, resistors may become an important source of interfering noise. One source of noise in a resistor is molecular thermal motion which generates a fluctuation voltage termed "thermal noise". It is not necessary to determine the magnitude of thermal noise by measurement since the mean-square value of the fluctuation voltage is predictable from Nyquist's equation, which shows the mean-square value to be proportional to the product of resistance, temperature, and the pass band of the measuring system. Generally, an increase in fluctuation voltage appears when direct current (dc) is passed through resistive circuit elements. The increase in fluctuation voltage is termed "excess noise" or "current noise". The magnitude of current noise is dependent upon many inherent properties of the resistor such as resistive material and other factors such as processing, fabrication, size and shape of resistive element, etc. Since there is no apparent functional relationship between current noise and many of these factors, current noise generally cannot be predicted from physical constants. Therefore, it is necessary to measure current noise to determine its magnitude. The method employed in this test has been designed to evaluate accurately the "noisiness" or "noise quality" of individual resistors in terms of a noise-quality index. The noise-quality index, expressed in decibels (dB), is a measure of the ratio of the root-mean-square (rms) value of current-noise voltage, in microvolts (μv), to the applied dc voltage, in volts. The pass band associated with the noise-quality index is one frequency decade, geometrically centered at 1,000 hertz (Hz). This index is termed the "microvolts-per-volt-in-a-decade" index. In the design of circuits, an added advantage accrues from the definitiveness of the index which allows the estimation of interference attributable to current noise. Conversely, for a given limit of current-noise interference in a particular circuit design, a maximum acceptable value of the index may be established. Ordinarily, it is not necessary to duplicate the operating conditions of the particular circuit design when measuring the current noise. The noise quality of populations of resistors may be reasonably estimated by measurement of the index of representative groups of resistors using suitable sampling procedures. Measurements on sample groups tend to have a normal distribution and once representative parameter values for the distribution have been established (the mean and standard deviation), such parameter values would serve as norms in judging "noisiness" and product uniformity insofar as noise is concerned.

1.1 Precautions. Adherence to the ambient temperature specified in 3.1 is emphasized as an important consideration of this method. It is also necessary, in making noise measurements, using the apparatus of this method, to delay reading the noise meter for a period of time no less than four times the effective time constant of the detector to allow the meter sufficient time to reach at least 98 percent of the representative average value. The effective time constant of the apparatus is normally adjusted to a value close to 1 second and therefore, a minimum time delay of 4 seconds is normally required for the noise meter to indicate a valid average. Immediately after this 4 second delay, the meter should be read even though it continues to fluctuate as the noise signal varies. Normally, the operator in making a visual reading of the fluctuating meter pointer, should estimate an average for a short duration, in the order of 1/2 to 1 second.

2. APPARATUS. Noise measurements should be made on Quan-Tech Laboratories, Inc., Model 315 Resistor-Noise Test Set, or equal, built in conformance with specifications recommended by the National Bureau of Standards (NBS) and detailed in a report entitled "A Recommended Standard Resistor-Noise Test System," by G.T. Conrad, Jr., N. Newman, and A.P. Stansbury published in the IRE Transactions of the Professional Group on Component Parts, Volume CP-7, Number 3, September 1960. The NBS-test system provides a means for establishing direct current through the resistor under test and measuring the resulting dc voltage and noise voltage appearing at the terminals of the resistor. These two voltages are indicated simultaneously on scales calibrated in db. Instrumentation is so arranged that the associated value of the "microvolts-per-volt-in-a-decade" index may be readily determined in accordance with 3.3.

2.1 Test system. The test system shall be as shown in the simplified block diagram on figure 308-1. The dc portion of the system consists of a variable dc power supply and a dc vacuum-tube voltmeter (VTVM). The alternating-current (ac) portion of the system consists of a calibration signal source and an indicating amplifier. The interconnecting leads, as well as the resistor under test, should be adequately shielded.

2.1.1 DC measurement considerations. The variable dc power supply furnishes dc loading power through an isolation resistor to the resistor under test. The isolation resistor prevents noise, appearing at the terminals of the resistor under test, from being severely attenuated by the very low, parallel impedance presented by the output terminals of the dc power supply. The isolation resistor must be free of current noise. Quiet wirewound-type resistors are suitable. One of four values for the isolation resistor, Rm, (1,000 ohms, 10,000 ohms, 100,000 ohms, or 1 megohm (mego)) is selected, depending on the resistance of the resistor under test, RT. The dc voltage appearing across the resistor under test is indicated by the dc VTVM. The meter has two scales - one showing the dc voltage across the resistor under test, V, and the other indicating the quantity D-20 log V, in dB. The scale simplifies computation of the current-noise index. The choice of value of the dc voltage is not critical, however, to avoid subjecting the resistor under test, and the isolation resistor as well, to excessive dc power dissipation or voltage, or both, standard nominal values of dc voltage and values for the isolation resistor are given in table 308-1.

2.1.2 AC measurement considerations. Noise voltage appearing at the terminals of the resistor under test is amplified and its rms magnitude is shown by the ac indicating amplifier. The indicating amplifier consists of a high-gain, low-noise amplifier, a filter, an rms detector, and an output meter. The filter restricts the frequency response of the amplifier to a flat-top, 1,000 Hz pass band, geometrically centered at 1,000 Hz. The output-meter scale, like that of the dc VTVM, is calibrated in dB to simplify calculations.

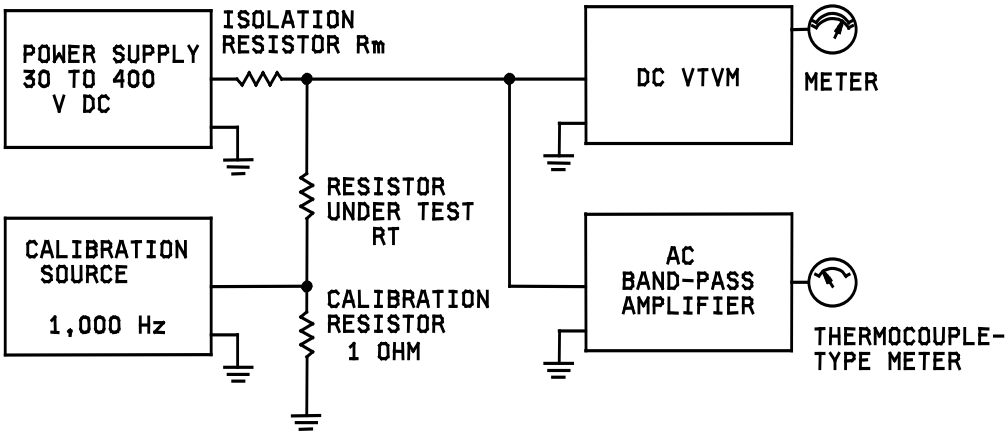

FIGURE 308-1. Block diagram of system.

2.1.3 Calibration technique. The calibration technique consists of first applying a predetermined value of 1,000 Hz, sine-wave signal across a 1 ohm resistor located in series with the resistor under test, and then adjusting the gain of the amplifier, by means of a variable attenuator, until the output meter deflects to the "calibrate" line. This procedure standardizes the gain of the system and calibrates the indicating amplifier. It should be noted that since the calibration setting depends upon the impedance at 1,000 Hz of the resistor under test, resistors having the same dc resistance may not calibrate alike. The resistance of the calibration resistor (1 ohm) is considered negligible compared to that of any resistor under test (100 ohms to 22 mego); therefore, the effect of the calibration voltage appearing at the terminals of a zero-impedance generator located in series with the resistor under test. The magnitude of the calibration voltage is so chosen that the indicated output is equal to that which would be obtained if the calibration voltage were a noise voltage having an rms value of 1,000 μv in a decade. Such a signal should produce a reading of 60 dB when the system is properly calibrated; thus, 0 dB means 1 μv in a decade.

2.2 Synopsis. To summarize, this apparatus provides a measure of the rms value of the current-noise voltage generated in the resistor under test and transmitted in a frequency decade. The calibration technique refers the measured noise voltage to the terminals of an essentially zero-impedance noise-voltage generator located in series with the resistor under test. The noise voltage so measured, when corrected for the presence of system noise, is the "open circuit" current-noise voltage of the resistor under test. Since both the current-noise voltage and dc voltage are expressed in dB, the value of the “microvolts-per-volt-in-a-decade" index is obtained by subtracting the dc reading from the corrected noise reading. The corrected noise reading is discussed in 3.3.

3. PROCEDURE.

3.1 Operating conditions. The test shall be performed at an ambient temperature of 25°C ±2°C, unless otherwise specified. The specimen under test shall be stabilized at room ambient temperature prior to test. No special preparations of the specimen are required other than that its leads be clean. Standard operating conditions, based on the resistance value of the specimen to be tested, are given in table 308-1. The values of the isolation resistor, Rm, and the dc voltage, V, should be observed, although they are not critical, because the index is reasonably independent of the values of the isolation resistor and the dc voltage over a broad range. Therefore, it is not necessary to obtain the exact value of dc voltage given in table 308-1, rather to set it near the value, and to read carefully and record its value at the time of the measurement. In no case shall the ratings of the resistor under test be exceeded.

3.2 Measurements. After the operating conditions have been established, the measurement operation shall be performed in three steps, as follows:

(1) Calibration (see 3.2.1).

(2) Measurement of system noise (see 3.2.2).

(3) Simultaneous measurement of the dc voltage and the resulting total noise (see 3.2.3).

Generally, the measurements should be made in the order listed. The precautions in 1.1 should be observed.

3.2.1 Calibration. The calibration technique (see 2.1.3) standardizes the gain of the ac system for the particular resistor under test. For the noise measurements in steps 2 and 3 which follow, the sum of the ac attenuator setting and the ac meter reading, in dB, is a direct indication of the noise present in terms of an "open-circuit" rms noise voltage appearing across the terminals of the resistor under test.

TABLE 308-1. Standard operating conditions.

Resistance		Resistors 1/2 watt and higher			Resistors 1/4, 1/8, and 1/10 watt		
Resistor under test (Rt)	Isolation resistor (Rm)	20 log V(D)	DC voltage (V) 1/	DC power dissipation (Pdc)	20 log V(D)	DC voltage (V) 1/	DC power dissipation (Pdc)
Ohms	Ohms	dB	Volts	Milliwatts	dB	Volts	Milliwatts
100	1,000	10.1	3.2	100	10.1	3.2	100
120	1,000	11.6	3.8	120	10.9	3.5	100
150	1,000	13.5	4.7	150	11.8	3.9	100
180	1,000	15.1	5.7	180	12.5	4.2	100
220	1,000	16.9	7.0	220	13.4	4.7	100
270	1,000	18.3	8.2	250	14.3	5.2	100
330	1,000	19.2	9.7	250	15.1	5.7	100
390	1,000	19.9	9.9	250	15.8	6.2	100
470	1,000	20.7	10.8	250	16.7	6.9	100
560	1,000	21.4	11.8	250	17.5	7.5	100
680	1,000	22.3	13.0	250	18.3	8.2	100
820	1,000	23.1	14.3	250	19.2	9.1	100
1,000	1,000	24.0	15.8	250	20.0	10.0	100
1,200	1,000	24.8	17.3	250	20.8	11.0	100
1,500	1,000	25.8	19.4	250	21.7	12.2	100
1,800	1,000	26.6	21.2	250	22.5	13.4	100
2,200	1,000	27.4	23.4	250	23.4	14.8	100
2,700	10,000	28.3	26.0	250	24.3	16.4	100
3,300	10,000	29.2	28.7	250	25.2	18.2	100
3,900	10,000	29.9	31.2	250	25.9	19.7	100
4,700	10,000	30.8	34.3	250	26.7	21.7	100
5,600	10,000	31.5	37.4	250	27.5	23.7	100
6,800	10,000	32.3	41.2	250	28.3	26.1	100
8,200	10,000	33.2	45.3	250	29.1	28.6	100
10,000	10,000	34.0	50.0	250	30.1	32.0	100
12,000	10,000	34.8	54.8	250	30.9	35.0	100
15,000	10,000	35.8	61.2	250	31.8	39.0	100
18,000	10,000	36.6	67.1	250	32.5	42.0	100
22,000	10,000	37.4	74.2	250	33.4	47.0	100
27,000	0.10 mego	38.3	82.2	250	34.3	52.0	100
33,000	0.10 mego	39.2	90.8	250	35.1	57.0	100
39,000	0.10 mego	40.0	98.7	250	35.8	62.0	100
47,000	0.10 mego	40.7	108	250	36.7	69.0	100
56,000	0.10 mego	41.5	118	250	37.5	75.0	100
68,000	0.10 mego	42.3	130	250	38.3	82.0	100
82,000	0.10 mego	43.1	143	250	39.2	91.0	100

See footnote at end of table.

TABLE 308-1. Standard operating conditions - Continued.

Resistance		Resistors 1/2 watt and higher			Resistors 1/4, 1/8, and 1/10 watt		
Resistor under test (Rt)	Isolation resistor (Rm)	20 log V(D)	DC voltage (V) 1/	DC power dissipation (Pdc)	20 log V(D)	DC voltage (V) 1/	DC power dissipation (Pdc)
Ohms	Ohms	dB	Volts	Milliwatts	dB	Volts	Milliwatts
0.10 mego	0.10 mego	44.0	158	250	40.0	100	100
0.12 mego	0.10 mego	44.8	173	250	40.8	110	100
0.15 mego	0.10 mego	45.8	194	250	41.7	122	100
0.18 mego	0.10 mego	46.5	212	250	42.5	134	100
0.22 mego	0.10 mego	47.5	234	250	43.4	148	100
0.27 mego	1.0 mego	38.6	85.0	26.8	38.6	85.0	26.8
0.33 mego	1.0 mego	40.0	99.0	29.7	40.0	99.0	29.7
0.39 mego	1.0 mego	41.0	112	32.2	41.0	112	32.2
0.47 mego	1.0 mego	42.1	127	34.3	42.1	127	34.3
0.56 mego	1.0 mego	43.1	143	36.5	43.1	143	36.5
0.68 mego	1.0 mego	44.2	161	38.1	44.2	161	38.1
0.82 mego	1.0 mego	45.1	180	39.5	45.1	180	39.5
1.0 mego	1.0 mego	46.0	200	40.0	46.0	200	40.0
1.2 mego	1.0 mego	46.8	218	39.6	46.8	218	39.6
1.5 mego	1.0 mego	47.6	240	38.4	47.6	240	38.4
1.8 mego	1.0 mego	48.0	250	34.7	48.0	250	34.7
2.2 mego	1.0 mego	48.0	250	28.4	48.0	250	28.4
2.7 mego	1.0 mego	48.0	250	23.2	48.0	250	23.2
3.3 mego	1.0 mego	48.0	250	18.9	48.0	250	18.9
3.9 mego	1.0 mego	48.0	250	16.0	48.0	250	16.0
4.7 mego	1.0 mego	48.0	250	13.3	48.0	250	13.3
5.6 mego	1.0 mego	48.0	250	11.2	48.0	250	11.2
6.8 mego	1.0 mego	48.0	250	9.2	48.0	250	9.2
8.2 mego	1.0 mego	48.0	250	7.6	48.0	250	7.6
10 mego	1.0 mego	48.0	250	6.2	48.0	250	6.2
12 mego	1.0 mego	48.0	250	5.2	48.0	250	5.2
15 mego	1.0 mego	48.0	250	4.2	48.0	250	4.2
18 mego	1.0 mego	48.0	250	3.5	48.0	250	3.5
22 mego	1.0 mego	48.0	250	2.8	48.0	250	2.8

1/ DC voltage across the resistors under test for the measurement of total noise.

3.2.2 System noise (S). System noise is the background noise present when direct current is not present in the resistor under test. System noise is indicated after turning off the calibration voltage. The algebraic sum of the ac attenuator setting and the ac meter reading gives the magnitude of system noise, S, in dB.

3.2.3 Total noise (T). Both the dc voltage and the total noise are measured simultaneously. The value of dc voltage is given in table 308-1. The application of excessive dc voltage should be avoided by setting the dc voltage control to its minimum before applying the voltage, and when the voltage is applied, it should be increased to the desired value. The magnitude of the dc voltage is given by the sum, D, of the dc attenuator setting and the dc meter reading in dB. D equals 20 log V, where V is the dc voltage, in volts, applied to the terminals of the resistor under test. The associated noise measurement indicates the total noise present, i.e., the quadratic sum of the system noise and the current noise. This total noise is indicated by T, in dB.

3.3 Determination of the "microvolts-per-volt-in-a-decade" index. The current-noise index to be compared with the required index (see 5) shall be computed from the three measured quantities S, T, and D, in accordance with the following formula:

(Index), in dB = T-f(T-S)-D.

Where:

$$f(T-S) = -10 \log \left(1 - 10^{-\left[\frac{T-S}{10}\right]}\right)$$

The quantity f(T-S) is a correction for the presence of system noise while T is being measured. Values of f(T-S) are given in table 308-2 as a function of T-S. The quantity T-S represents the indicated increase in noise resulting from the presence of direct current. When this increase, T-S, is greater than 15.0 dB, then f(T-S) is essentially zero, and T alone is the measure of current noise.

4. ERRORS. Accuracy and repeatability of determinations of the current-noise index are influenced by the combined effects of many factors including the following - characteristics of the test set, ambient temperature, inherent fluctuations in current noise, relative magnitude of current noise as compared to system noise, and delay between the application of dc voltage and observation of meter deflection. Therefore, in the interest of a better understanding of the significance of the measurement, a discussion of errors is included. The error associated with the determination of the index is a function of two independent errors, one a bias-type or constant error, and the other a random-type or variable error. The bias error is constant for any particular measuring condition. The maximum bias error introduced by the test set should not exceed 0.4 dB. A conservative estimate of the bias error introduced by the permissible departure of ambient temperature from 25°C as stated in 3.1, is at most 0.2 dB. The "worst case" bias error for these two factors is the sum of their absolute values, 0.6 dB. Although the bias error for any particular measurement is not known, for purposes of this discussion the "worst case" condition is assumed, and 0.6 dB will be considered the magnitude of bias error associated with the index. The random error associated with the index is that of the current noise, [T-f(T-S)]. The index will be considered for two cases; the more simple case where the current noise is relatively large, i.e., T-S>15.0 dB for which f(T-S)≈0, and therefore current noise is represented by T alone; and the second case where the current noise is not relatively large and is represented by [T-f(T-S)], with f(T-S) being significant. In either case, the probable error of the index is approximately equal to the error component which predominates, whether it be bias error or random error. For the first case, the only significant quantity which varies is T, therefore the random-error component of the index error is equal to the random error associated with the measurement of the total noise, T. The random error of T is evidenced by fluctuations of the meter pointer and tends to have a normal distribution. The magnitude of the probable random error of T cannot be given explicitly because its value is necessarily a function of the resistor under test and must be determined from measurements. The probable random error of T for different resistors may range from values as low as approximately 0.2 dB to values as high as several dB in resistors having large noise variations.

For resistors having a probable random error of T less than 0.6 dB, the probable error of the index is approximately equal to the bias error, assuming the bias error is the "worst case", i.e., 0.6 dB. This means that on the average, one-half of the measurements would have an error no greater than 0.6 dB. On the other hand, when the probable random error of T is greater than the bias error, the probable error of the index is equal to that of T. For the second case, the probable random-error component of the index is greater than that of T alone. This follows because the magnitude of current noise is determined from the difference between two measurements, T and S, each of which fluctuates, rather than from T alone. Measurements indicate that the probable random error of S should be in the order of 0.2 dB. Assuming that this is the case, the probable random-error component of the index is approximately double that of T for the measurement condition T-S = 3 dB, and approximately four times that of T for the condition T-S = 1.5 dB. The limit of sensitivity for measuring the current-noise index is approached as the current noise approaches values too small to cause an increase as much as 1.0 dB, i.e., T-S equal to 1.0 dB. However, the test method may serve as a qualitative means for comparing resistors having relatively low values of current noise where T-S is less than 1.0 dB. Another possible source of measurement uncertainty is the transitory variations in current noise which may immediately follow application of dc voltage. Certain types of resistors tend to display very little, if any, transitory variations, whereas other types tend to display such variations to a measurable degree. For those resistors which exhibit such variations, the current noise usually settles to a more stable value after a short time, from 1 to several seconds. In some cases, the current-noise variations may continue to be relatively large and unstable for extended periods of time. Such resistors are usually very noisy. By adhering to the precautions regarding the procedures stated in 1.1, the effects of such variations on repeated measurements are reduced.

5. SUMMARY. The following requirement and details are to be provided when this method is specified:

   a. Required values of the "microvolts-per-volt-in-a-decade" index (see 3.3).

   b. Ambient temperature, if other than that specified (see 3.1).

   c. Value of dc voltage, if other than those stated in table 308-1 (see 2.1.1 and 3.1).

TABLE 308-2. Correction factor for presence of "system noise".

T-S dB	f(T-S) Correction factor	T-S dB	f(T-S) Correction factor
1.0	6.9	4.3	2.0
1.1	6.5	4.4	1.9
1.2	6.2	4.5	1.9
1.3	5.9	4.6	1.8
1.4	5.6	4.7	1.8
1.5	5.3	4.8	1.7
1.6	5.1	4.9	1.7
1.7	4.9	5.0	1.6
1.8	4.7	5.1	1.6
1.9	4.5	5.2	1.5
2.0	4.3	5.3	1.5
2.1	4.1	5.4	1.4
2.2	3.9	5.5	1.4
2.3	3.8	5.6	1.4
2.4	3.6	5.7	1.3
2.5	3.5	5.8	1.3
2.6	3.4	5.9	1.3
2.7	3.3	6.0	1.2
2.8	3.2	6.1	1.2
2.9	3.1	6.2	1.2
3.0	3.0	6.3	1.1
3.1	2.9	6.4	1.1
3.2	2.8	6.5 to 6.9	1.0
3.3	2.7	7.0 to 7.3	0.9
3.4	2.6	7.4 to 7.9	0.8
3.5	2.5	8.0 to 8.5	0.7
3.6	2.4	8.6 to 9.3	0.6
3.7	2.4	9.4 to 9.9	0.5
3.8	2.3	10.0 to 11.5	0.4
3.9	2.2	11.6 to 12.7	0.3
4.0	2.2	12.8 to 14.5	0.2
4.1	2.1	14.6 to 15.0	0.1
4.2	2.0	M15.0	≈ 0

METHOD 309

VOLTAGE COEFFICIENT OF RESISTANCE DETERMINATION PROCEDURE

1. PURPOSE. Certain types of resistors exhibit a variation of resistance with changes in voltage across the resistor. This is a measurable characteristic; a test to determine the magnitude of such a characteristic is the Voltage Coefficient of Resistance Determination Procedure.

2. PROCEDURE. The voltage coefficient is applicable only to resistors of 1,000 ohms and over. Unless otherwise specified in the individual specification, all measurements and tests shall be made at a temperature of 25°C ±5°C. Adjust the resistance measuring device to apply 0.1 X rated continuous working voltage to the resistor. Measure the resistance by applying this voltage intermittently for not more than the total of 0.5 second in any 5 second interval. Readjust the resistance measuring device to apply 1.0 X rated continuous working voltage to the resistor and repeat the above intermittent measuring procedure. Compute the Voltage Coefficient (VC) as follows:

$$VC = \frac{(R - r)100}{0.9Er}$$

Where:

R = Resistance at rated continuous working voltage.
r = Resistance at 0.1 rated continuous working voltage.
E = Rated continuous working voltage.

3. PRECAUTIONS. Adherence to 2, applying voltage intermittently for not more than the total of 0.5 seconds in any 5 second interval is emphasized as an important consideration of this method. Failure to comply would result in a voltage coefficient of vast variations. A resistance measuring device capable of withstanding high voltage applications should be used. Certain types of resistors exhibit a variation of resistance with changes in potential difference, this effect being separate and distinct from the change in resistance due to heating effect whether from applied voltage or ambient conditions.

4. SUMMARY. The following detail is to be specified in the individual specification:

The continuous working voltage (see 2).

METHOD 310

CONTACT-CHATTER MONITORING

1. PURPOSE. This test is conducted for the purpose of detecting contact-chatter in electrical and electronic component parts having movable electrical contacts, such as relays, switches, circuit breakers, etc., where it is required that the contacts do not open or close momentarily, as applicable, for longer than a specified time-duration (see 4.3) under environmental test conditions, such as vibration, shock, or acceleration. This test method provides standard test procedures for monitoring such "opening of closed contacts" or "closing of open contacts".

2. TEST CIRCUITS.

2.1 Selection. In this method there are two test-circuits: A (see 3.1), and B (see 3.2). The selection of the test-circuit depends largely upon the type of electrical contacts to be tested. Test-circuit B is preferred, whenever possible, to avoid contact contamination caused by the formation of carbonaceous deposits on the contacts. The individual specification shall specify the test-circuit and time-duration (see 4.3) required in connection with monitoring of shock and vibration tests. The test-circuits listed herein are "recommended" reference circuits. Any comparable test-circuit which meets the test requirements and the calibration procedures as stated herein, may be used for this test.

2.1.1 Selection of test-circuit A. Test-circuit A is for monitoring test-specimens with a single set of contacts, for the opening of normally-closed contacts or false closures of normally-opened contacts (see figure 310-1). Test-circuit A should not be specified for specimens whose capability includes low-level or dry-circuit ratings (10 milliamperes or less and 2 volts or less for openings or closings less than 10 microseconds); since the current through the electrical contacts under test from the test-circuit may cause arcing, thus damaging the contacts.

2.1.2 Selection of test-circuit B. Test-circuit B is for monitoring test-specimens with a single set of contacts, for the opening of normally-closed contacts and false closures of normally-open contacts (see figure 310-3). Test-circuit B should not be used for openings or closings of less than 10 microseconds. Test-circuit B does not allow current in excess of 20 milliamperes or an open-circuit voltage in excess of 2-volts during monitoring; which insures that there will be no arcing, which will cause damage, to low-level and dry-circuit test specimens.

3. TEST SYSTEMS.

3.1 Test-circuit A. The test circuit shall be the thyratron circuit shown on figure 310-1 or an approved equivalent circuit. The values for R1, C1, and the suppressor grid-cathode voltage, controlled by R7, principally controls the firing of the thyratron and are so chosen that the thyratron will fire when the duration of the contact-opening exceeds the time-duration specified in the individual specification (see 4.3 and 5). For the longer time-durations, such as above 1 millisecond, it may be necessary to change the values of R2, R5, and R6.

a. To monitor normally-closed contacts, the normally-closed contacts are connected to BP1 and BP2, with switch S1 in the "normally-closed position". The grid of the thyratron is placed at ground potential. The cathode of the thyratron is at a positive potential (depending on the setting of R7), thus providing sufficient negative bias to cut the thyratron "off". Any contact chatter (opening of closed contacts) will cause the grid of the thyratron to rise exponentially to +150 volts at a rate determined by the preselected time constant of R1 and C1. As long as the contacts remain open, the grid potential will continue to rise. If the contacts remain "open" for longer than the specified interval, the grid potential rises to the point at which the thyratron conducts and ionizes, thus lighting DS1. Since, in a thyratron, the grid loses control of conduction as soon as the tube conducts, the contacts being monitored can reclose at any time thereafter without affecting the monitoring circuit. Thus, lamp DS1 will remain "on" until the thyratron is manually reset by operation of switch S2.

b. To monitor normally-open contacts for false closures, it is necessary to operate switch S1 to the "normally-open position", so that the connection between the +150 volts and the time-constant charging circuit is "open". When open contacts are connected to BP1 and BP2 and the connection is made, these contacts "close". At contact closure, voltage is applied to the charging circuit, starting a build-up in the same manner as described in (a) for normally-closed contacts. At the conclusion of the test, if lamp DS1 is "off", then there has been a no-chatter interval exceeding the specified duration; if the lamp is "on", then there was at least one-interval when the specified time-duration was exceeded. After an indication of failure, the thyratron circuit shall be restarted by operation of switch S2.

3.1.1 Calibration procedure for test-circuit A. The calibration-circuit shown on figure 310-2 may be used to calibrate the monitoring-circuit shown on figure 310-1 by using the following procedure:

a. Make the proper connections of the monitoring-circuit to the calibration-circuit as shown, and set switch S1 to position A.

b. Calibrate the oscilloscope triggering input as follows:

(1) Set switch S4 to position A, so that the trigger input is connected to the Y-axis input of the oscilloscope.

(2) Set the time-base control of the oscilloscope for approximately 20-percent of the time-duration for which the calibration is being made.

(3) Set the Y-amplitude of the oscilloscope for 1-volt per centimeter.

(4) Set the triggering coupling to ac sensitivity.

(5) Open the switch S3 and adjust the triggering level and stability control so that the trace on the oscilloscope will trigger at 0.5-volt or less. The closer the trigger-level is to zero, the greater the accuracy of calibration.

c. Set switch S4 to position B, so that the Y-axis input of the oscilloscope is connected through capacitor C4 to the plate of the thyratron in the test circuit.

d. Close switch S3.

e. Set the Y-amplitude of the oscilloscope for a usable display, and the time-base as in preceding (b) (2).

f. Depress monitor-circuit reset switch S2 of figure 310-1 to set the circuit in the "ready" position, i.e., with the circuit being calibrated and lamp DS1 extinguished.

g. Open switch S3; the observed trace of the oscilloscope should move across the screen at a positive amplitude until it is deflected downward by the negative pulse created when the thyratron fires. The time interval between the start of the trace and the negative pulse is the detection time. Adjust R7 of figure 310-1 to the time-duration specified in the individual specification.

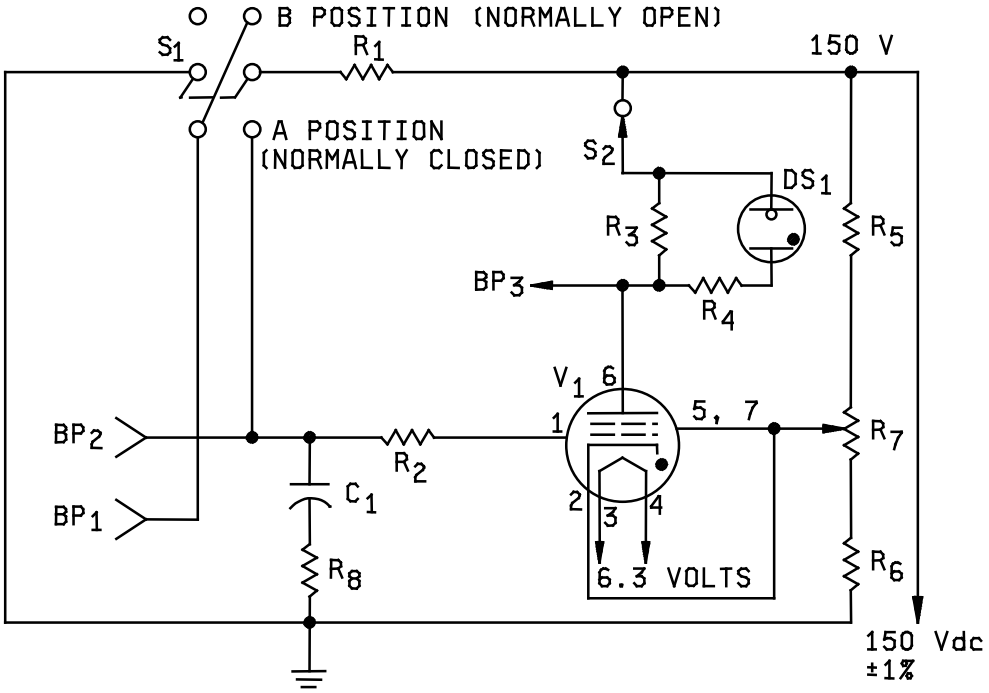

Resistors	Capacitors
R_1 - 35K 1/2W, 1% (see note 1)	C_1 - .0022μF, 600 VDCW (see note 1)
R_2 - 27K 1/2W, 5%	
R_3 - 47K 1W, 5%	**Miscellaneous**
R_4 - 200K 1/2W, 5%	
R_5 - 70K 1W, 5%	DS_1 - NE-51
R_6 - 2.4K 1W, 5%	S_1 - DPDT
R_7 - 5K 1W	S_2 - SPSTNC 125V 1 amp (push)
R_8 - 500 1/2W, 5%	V_1 - JAN-5727/2D21W

NOTES:
1. These values are to be chosen to obtain the desired time-duration for the applicable test condition (see 4.3). These particular values are applicable to 10 microseconds time-duration only.

FIGURE 310-1. Test-circuit A; monitor circuit for contact-opening and closing.

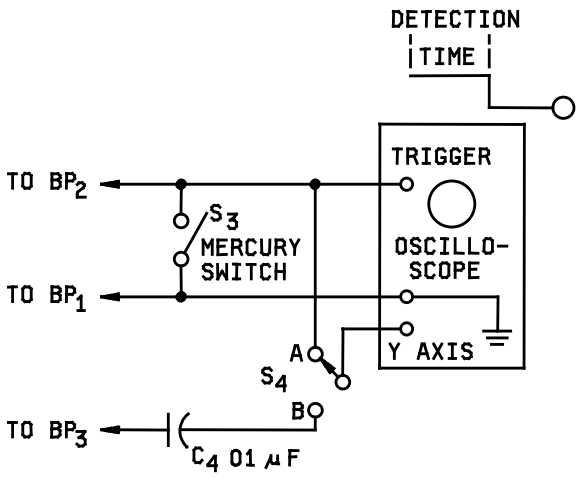

NOTE: The oscilloscope shall have an accuracy of ±3 percent or better on time base and have provision for external triggering.

FIGURE 310-2. Calibration circuit for test-circuit A.

3.2 Test circuit B. The monitor-circuit shown on figure 310-3 permits detection of contact-chatter of closed contacts and false closure of open contacts, independently or simultaneously. The low contact-load levels (see 2.1.2) insure that there will be no arcing of the contacts during monitoring.

a. The chatter portion of figure 310-3, resistors R3 and R4 form a voltage divider with their junction at +2 volts. The closed contacts of the component under test, short-circuit R4 and place the base of transistor amplifier Q1 to ground potential. When the contacts under test "chatter" (open), resistor R4 is no longer short-circuited and capacitor C1 starts to charge through R2 and R7 to +2 volts. The time necessary for C1 to charge to the correct bias-level is determined by the resistance of R2 and R7 and the capacitance value of C1. As transistor Q1 draws current through the gate of SCR1, the unit will fire and turn-on lamp DS1. Since in a silicon-controlled rectifier, the gate loses control after it is turned "on", the contacts can reclose at any time thereafter without affecting the monitoring circuit. The time-delay, before turn-on, can be adjusted by varying R2 and selecting the capacitance value of C1. (For example: C1 = .002 μF gives a 10-microsecond open-contact time.)

b. In the false-make portion of figure 310-3, transistor-amplifier Q2 is normally "on" with the gate of SCR2 being effectively held at ground potential by the low-output impedance of transistor Q2. When a "false-make" occurs, the base of Q2 transistor is grounded, turning Q2 "off". This allows the gate of the SCR2, which is tied to the collector of transistor Q2, to rise to +12 volts. The rate of increase is determined by the value of C2 and R8. (For example: C2 = .002 μF gives a 10-microsecond false-make time.) When the voltage reaches the gate turn-on level of SCR2, lamp DS2 will light, indicating a false closure of the open contacts.

c. When this circuit is being used to simultaneously monitor both the open and closed contacts of a double set of contacts:

(1) If DS1 "lights", it is an indication of contact chatter.

(2) If DS1 and DS2 "lights", it is an indication of false transfer or possible bridging, i.e., the movable contact of the open circuit "closes" but the closed circuit has not opened.

(3) If DS2 "lights", it is an indication of bridging.

d. Restoration of the circuit for an indication of failure is accomplished by the operation of S1.

3.2.1 Calibration procedure for test-circuit B. The calibration-circuit shown on figure 310-4 may be used to calibrate the monitoring-circuit shown on figure 310-3 by using the following procedure:

a. Make the proper connections of the monitoring-circuit to the calibration-circuit.

(1) BP1 and BP2 for contact-chatter calibration.

(2) BP1 and BP3 for false contact-make calibration.

b. Select the appropriate 5 volt square-wave "pulse-polarity" and "pulse-width" to be furnished by the pulse generator and monitor the pulse on the oscilloscope, as follows:

(1) For contact-chatter calibration: Negative pulse.

(2) For false contact-make calibration: Positive pulse.

(3) Pulse width for either of the preceding (1) or (2) equal to the required detection time.

c. If DS1 or DS2 (as applicable) "lights", adjust R2 or R8 until the light is extinguished.

d. Slowly adjust R2 and R8 (as applicable) to the time-duration specified in the individual specification, as indicated by the first point at which DS1 or DS2 "lights".

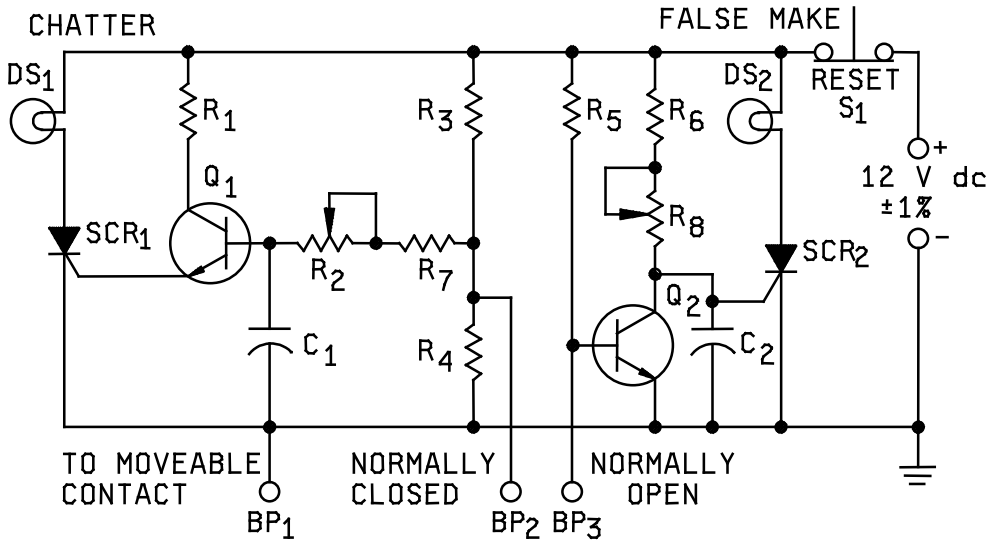

C_1, C_2	- Choose for specified time (see note 1)	R_6	- 1,000 ohms 1/4W, 5%
DS_1, DS_2	- No. 344 Lamp	R_7	- 100 ohms 1/4W, 5%
R_1	- 750 ohms 1/4W, 5%	R_8	- 200 ohms pot.
R_2	- 2,000 ohms pot.	Q_1, Q_2	- 2N332A or equivalent
R_3, R_5	- 10,000 ohms 1/4W, 5%	SCR_1, SCR_2	- 2N1595 or equivalent
R_4	- 2,500 ohms 1/4W, 5%	S_1	- SPST NC Push

NOTE:

1. Use .0022 μF for 10 microsecond time-duration. Other time-duration will require larger capacitors.

FIGURE 310-3. Test-circuit B; monitor circuit for contact-chatter and false closures.

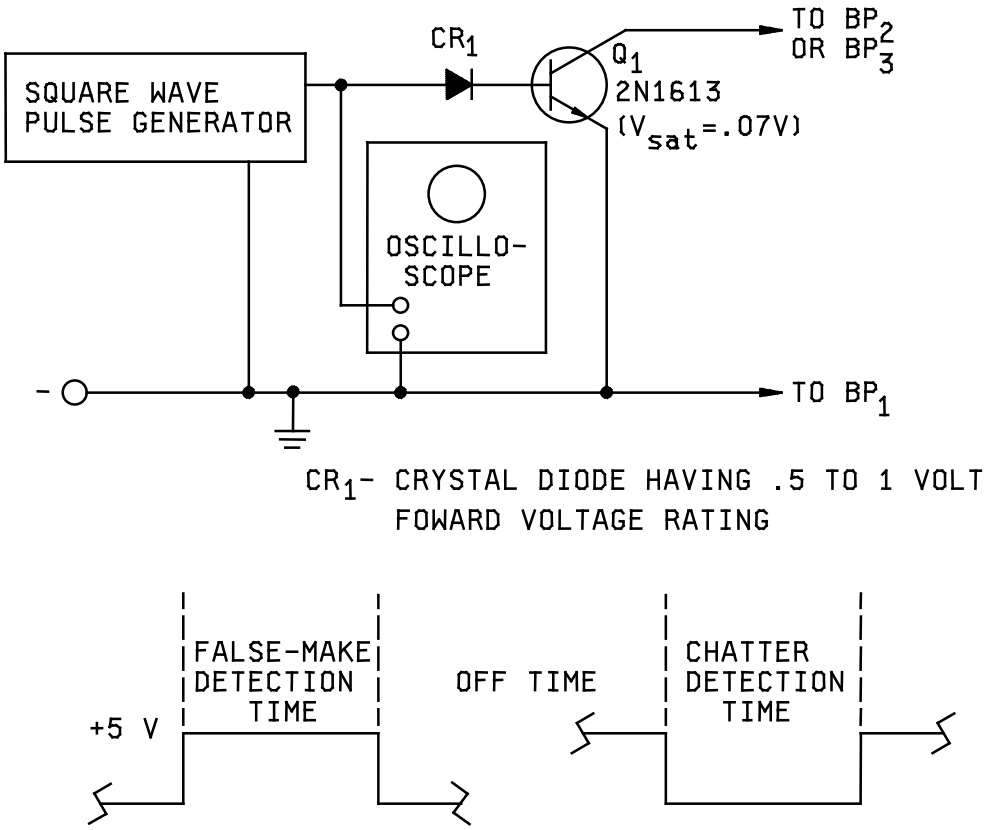

NOTES:
1. The square-wave pulse generator and oscilloscope shall have an accuracy of ±3 percent or better.
2. The ratio of off-time to detection-time shall be 10:1 or better.

FIGURE 310-4. Calibration circuit for test-circuit B.

4. PROCEDURE.

4.1 Preparation. The monitor-circuits of figures 310-1 and 310-3 shall be calibrated, immediately prior to use, using the applicable calibration-circuit (see figures 310-2 and 310-4, respectively). The calibration-circuit shall then be disconnected from the monitoring-circuit.

4.2 Points of connection. The contacts of the test-specimen being monitored shall be connected to points BP1 and BP2 for test circuit A for both contact-chatter and false-make contact conditions. For test circuit B, the points of connection shall be BP1 and BP2 for contact-chatter condition and to points BP1 and BP3 for false-make contact condition. The test specimen shall then be subjected to the shock, vibration, acceleration, or other environmental test during which this contact-chatter monitoring test method is to be used. If specified in the individual specification, test specimens having normally-closed contacts may be wired in series to monitor for opening of contacts, and those having normally-open contacts may be wired in parallel to monitor for closing of contacts. In this case, if contact opening or closing is indicated, it will then be necessary to reset each test specimen separately and monitor it individually to determine which one is defective.

4.3 Test conditions. Test specimens shall be subjected to one of the following test conditions, as specified in the individual specification:

Test condition	Time duration
A	10 microseconds
B	100 microseconds
C	1 millisecond
D	5 milliseconds
E	20 milliseconds

5. SUMMARY. The following details are to be specified in the individual specification:

a. Test circuit letter (see 2.1, 3.1, and 3.2).

b. Test condition letter for maximum allowable time-duration of contact-opening or closing, as applicable (see 4.3).

c. Whether series-connection (of normally-closed contact test-specimens) or parallel-connection (of normally-open contact test-specimens) may be allowed (see 4.2).

METHOD 311

LIFE, LOW LEVEL SWITCHING

1. PURPOSE. This test is conducted for the purpose of determining electrical contact reliability under low-level switching conditions in the environment in which the contacts operate. A low level switching circuit is one in which the voltage and stored energy are sufficiently small so that the resistance of a pair of contacts is not affected by electrical phenomena associated with the electrical current flow or the switching. Such a circuit is also one where the voltage or the current is too low to cause any physical change in the contacts; contact resistance can only be affected by changes in the contacts caused by mechanical action on the contacts. Electrical loads, which result in arcing across electrical contacts, affect contact surfaces in many ways, mostly favorable to reduction of contact resistance, since insulating films and small rough raised areas on the contact are burned away or melted down, to reform as a more even and larger contact surface. Under low-level conditions, the advantages, as well as the occasional disadvantages of this arcing will be absent. If low-level loads and intermediate or power loads are to be applied to different pairs of contacts on the same component part simultaneously, reliability of the low-level conditions can be impaired due to deposition of foreign materials resulting from vaporization surrounding the contacts operating at larger loads in the same enclosure or in an adjacent area, because of this fact, and because low-level contacts may develop films as a function of their environment, the contacts are tested in an environment similar to that in which they are used. This test in no way reflects the contact capability in the intermediate or "minimum" current area and shall not be considered as a substitute for testing in this area when specified.

2. APPARATUS.

2.1 Test circuit. Monitoring of the contact resistance of each pair of contacts shall be accomplished on each cycle. A separate monitoring indicator shall be used for each pair of contacts. The apparatus, which cyclically operates the contacts, shall be capable of automatically cycling the contacts at the rate specified. The power source for the open-circuit voltage shall not exceed 30 millivolts dc maximum or peak ac at 10 milliamperes (mA) maximum. Open-circuit voltage is defined as the voltage that would appear at the contacts, when the circuit is energized and when the contacts are open. One means of generating this voltage is to pass a stable adjustable current through a low-ohmage resistor (such as a shunt resistor for an ammeter). This means will provide the low impedance, low voltage, controllable, and well defined voltage source necessary. The current shall be adjusted so that the current through the pair of contacts, when closed is limited to 10 milliamperes, maximum.

2.2 Monitoring apparatus. The monitoring apparatus shall be capable of indicating resistances greater than a particular value, as specified. Care should be exercised so as to minimize any loading effects by the monitoring apparatus such as current surges as a result of shunt capacitance of shield wire or instrumentation current to the monitoring indicator. During each closure, the contact potential shall be monitored for at least 50 percent of the time contacts are closed. The apparatus shall provide and record, either manually or automatically, the following information:

a. Number of contact closures with contact load applied.

b. If required, number of times the contacts have performed as specified prior to the first failure to perform as specified.

c. Number of times the contacts have failed to perform as specified, i.e., the number of "misses".

d. Sticking of contacts, when in the "open" condition, unless otherwise specified. Sticking of contacts shall be defined as failure to reach 90 percent of the open-circuit voltage.

3. PROCEDURE. Each pair of contacts shall be operated for the number of cycles specified at the specified cycling rate with the required test load (see 2) applied. The contact resistance shall be continuously monitored using the apparatus in 2.1 and 2.2.

4. SUMMARY. The following details are to be specified in the individual specification:

   a. If applicable, specify environment, e.g., temperature, humidity, pressure, composition of atmosphere, and any other special environmental conditions (see 1).

   b. Number of "misses" allowed which will be considered a failure (see 2).

   c. Maximum contact resistance allowed (see 2.1).

   d. If monitoring of contacts for sticking is not applicable (see 2.2).

   e. Number of cycles of operation and cycling rate (see 3).

METHOD 312

INTERMEDIATE CURRENT SWITCHING

1. PURPOSE. This test is conducted for the purpose of determining the electrical contact reliability of such items as electromechanical relays, switches, etc., under intermediate current (formerly known as "minimum current") switching conditions under which the contacts operate. An intermediate current switching circuit is one in which there is insufficient voltage and stored energy to cause contact arcing during opening or closing of mating contacts, but which have sufficient energy to cause melting of the contact material. Normal arcing of contacts at rated load levels often act to burn off any oxide or other film on the contacts or provide localized melting at the point of contact, so that contact resistance does not rise drastically. Without this arcing of the contacts, oxides and other contaminant films can build up on contacts in component parts which have not been sealed adequately or which have contaminating materials and vapors trapped within the enclosure due to improper manufacturing techniques. Such contacts will develop unacceptably high contact resistance under intermediate current loads, unless the contact force and wipe are sufficiently heavy to overcome any effect of contamination. Intermediate current switching is the range in which a large percentage of loads occur. Therefore, it is extremely important that an intermediate current switching test be imposed on all electromechanical relays and switches, which are to be used in this range. Relays and switches, which pass both low level and full rated load tests, frequently fail when used in the intermediate current switching range.

2. PRECAUTIONS. Full rated load and low level life tests are not a substitute for the intermediate current switching test. Successful testing at low level and full rated loads in no way reflects the capability of the relay or switch at intermediate current loads. Statements or titles for component parts, such as "low level to full rated load" shall not be used in specifications, unless intermediate current switching capability has been demonstrated by the requirement for testing by this method.

CAUTION: A low-level run-in test is not equivalent to intermediate current testing and conversely intermediate current capability does not indicate low level capability.

3. APPARATUS.

3.1 Test circuit. Monitoring of the specified contact resistance of each pair of mating contacts shall be accomplished on each cycle. Each contact shall be monitored on each closure. The apparatus, which cyclically operates the contacts, shall be capable of automatically cycling the contacts at the rate specified. Resistive load voltage shall be applied to the contacts and shall be 3.0 V dc to 10.0 V dc at 100 ±10.0 milliamperes (mA) such as by means of a well regulated power supply which will provide the low voltage, controllable, and well defined voltage source. Voltage, when required to energize coils in order to actuate the contacts, shall be as specified. Both normally open and normally closed contacts of double-throw switching parts shall be tested. Multipole contacts shall be connected with all normally open pairs of contacts loaded and all normally closed pairs of contacts loaded.

3.2 Monitoring apparatus. The monitoring apparatus shall be capable of indicating resistances greater than a particular value specified. During each closure, the contact potential shall be monitored 10 milliseconds (ms) or more after the end of specified contact bounce. The apparatus shall provide and record either manually or automatically, the following information:

a. Number of contact closures with contact load applied.

b. If required, number of times contacts have performed as specified prior to failure to perform as specified.

c. Sticking of contacts, when intended to be in the "open" condition, unless otherwise specified. Sticking of contacts shall be defined as any failure of closed contacts to open as required during the cycling, or indication across such contacts of less than 90 percent of the applied open-circuit contact voltage.

4. PROCEDURE. Each pair of contacts shall be operated for 25,000 cycles (see note below) at the specified cycling rate. The duty cycle shall be approximately 50 percent "on" and 50 percent "off". The component parts shall be tested in a temperature chamber at the rated maximum ambient operating temperature with the required test load (see 3.1). When specified, the final half of the test cycles shall be tested at room ambient temperature. Each pair of contacts shall be individually monitored on each operation for failure-to-break (FTB) and for failure-to-make (FTM) the test load, using the apparatus in 3.1 and 3.2. FTB shall be defined as a voltage drop across the contacts of less than 90 percent of the applied voltage when the contacts are intended to be open. FTM shall be defined as a voltage drop across the contacts greater than 0.1 times the maximum allowable contact resistance (in ohms), when the contacts are intended to be closed. The voltage drop across the contacts shall be monitored for at least 50 percent of the time the contacts are closed and for at least 50 percent of the time the contacts are open, unless the monitoring apparatus can be demonstrated to be capable of settling to a stable reading in a shorter period of time. Any FTB or FTM shall either be recorded or shall automatically stop the actuating apparatus.

NOTE: Because the test is conducted for only 25,000 operations, it must not be inferred that the relays or switches, so tested, are suitable for only 25,000 operations in the intermediate current range. Quite the contrary, if the 25,000 operations test is passed satisfactorily, the relays or switches can be expected to be capable of switching intermediate current loads well beyond the full rated load life cycles specified.

5. SUMMARY. The following details are to be specified in the individual specification:

a. Maximum contact resistance allowed (see 3.1).

b. Coil energizing voltage (see 3.1).

c. Cycling rate (see 3.1).

d. Contact bounce, if applicable (see 3.2).

e. If monitoring of contacts for sticking is not applicable (see 3.2c).

f. Whether final half of cycles is to be tested at room ambient temperature (see 4).

g. Rated maximum operating ambient temperature (see 4).

Custodians:
Army - CR
Navy - EC
Air Force - 85

Review activities:
Army - AR, AT, AV, CR4, MI, SM, TE
Navy - AS, OS, SH
Air Force - 19, 99
NSA - NS

Preparing activity:
DLA – CC

(Project 59GP-2012-003)

NOTE: The activities listed above were interested in this document as of the date of this document. Since organizations and responsibilities can change, you should verify the currency of the information above using the ASSIST Online database at https://assist.dla.mil/.