MIL-STD-I20

12 December 1950

W/CHG. NOTICE #1

9 SEPT 1963

MILITARY STANDARD

GAGE INSPECTION

UNITED STATES
GOVERNMENT PRINTING OFFICE
WASHINGTON : 1951

For sale by the Superintendent of Documents, U.S. Government Printing Office
Washington 25, D. C. - Price $1.00

MUNITIONS BOARD STANDARD AGENCY

DEPARTMENT OF DEFENSE

WASHINGTON, D. C.

12 DECEMBER 1950

Gage Inspection
MIL-STD-120

1. This standard has been approved by the Departments of the Army, the Navy, and the Air Force for the purpose of establishing uniform practices throughout the Military Services for the care and use of inspection gages and special measuring devices used in connection with the dimensional control of all products and equipment procured by the U. S. Armed Forces.

2. The Munitions Board Standards Agency approved this standard for printing and inclusion in the MIL series of standards on 12 December 1950.

3. In accordance with established procedure, the Munitions Board Standards Agency has designated the Ordnance Corps, the Bureau of Ordnance, and the Air Force, respectively, as joint custodians of this standard.

4. When repeated deviations from this standard are required by a department or technical service, a report shall be submitted to the Munitions Board Standards Agency by the activity concerned explaining the reason for the deviation.

CONTENTS

Paragraph		Page
1	PURPOSE AND SCOPE	1
1.1	General	1
1.1.1	Scope	1
1.1.2	Purpose	1
1.1.3	Classification of gages and measuring equipment	1
1.1.3.1	Length standards	1
1.1.3.2	Master gages	1
1.1.3.3	Inspection gages	1
1.1.3.4	Manufacturer's gages	1
1.1.3.5	Nonprecision measuring equipment	1
1.1.3.6	Precision measuring equipment	1
1.1.3.7	Comparators	1
1.1.3.8	Optical comparators and gages	1
2	DIMENSIONS AND TOLERANCES	2
2.1	General	2
2.2	Definitions	2
2.2.1	Dimension	2
2.2.2	Nominal size	2
2.2.3	Basic size	2
2.2.4	Design size	2
2.2.5	Actual size	2
2.2.6	Limits of size	2
2.2.7	Fit	2
2.2.8	Tolerance	2
2.2.9	Allowance	2
2.3	Tolerances	2
2.3.1	Unilateral tolerances	2
2.3.2	Bilateral tolerance	2
2.3.3	Gage tolerances	2
2.3.3.1	Tolerances on plain gages	3
2.3.3.2	Tolerances for thread gages	4
2.3.4	Gage wear allowance	4
2.3.5	Relation of gage limits to part limits	4
2.3.6	Disputed rejections	5
3	NONPRECISION MEASURING EQUIPMENT	6
3.1	General	6
3.2	Description	6
3.2.1	Steel rule	6
3.2.2	Hook rule	6
3.2.3	Steel rule with holder	6
3.2.4	Rule depth gage	7
3.2.5	Adjustable steel square	7
3.2.6	Combination set and combination square	7
4	PRECISION MEASURING EQUIPMENT	9
4.1	General	9
4.2	Length standards	9
4.2.1	Line-graduated standards	9
4.2.2	Precision gage blocks	9
4.2.3	End measuring rods	9
4.2.4	Master disks	10
4.2.5	Wires and rolls	10
4.2.6	Solid angle standards and precisions squares	10
4.3	Scale and vernier	11
4.3.1	Vernier caliper	11
4.3.1.1	Directions for reading the vernier caliper	11
4.3.2	Vernier depth gage	12
4.3.3	Vernier height gage	12
4.3.4	Gear tooth vernier caliper	12
4.3.5	Vernier bevel protractor	13
4.3.6	Directions for reading the vernier protractor	13
4.4	Micrometers	16
4.4.1	Micrometer caliper	16
4.4.1.1	Directions for reading a micrometer caliper	18
4.4.1.2	Directions for reading the vernier micrometer caliper	19
4.4.2	Screw thread micrometer caliper	19
4.4.3	Inside micrometers	20
4.4.4	Micrometer depth gage	20
4.4.5	Supermicrometer	21
4.5	Measuring machines	22
4.5.1	Universal measuring machine	22
4.5.2	Special measuring machines	23
4.6	Comparators	23
4.6.1	Vertical comparators	23

Paragraph		Page
4.6.2	Electric comparators	24
4.7	Optical instruments and comparators	25
4.7.1	Optical flats	25
4.7.2	Optical projection machines	25
4.7.3	Tool maker's microscope	27
4.7.4	Optical dividing head	27
4.8	Auxiliary equipment	27
4.8.1	Sine bars and plates	27
4.8.2	Dial indicators	27
4.8.3	Surface laces	30
4.8.4	Tool maker's flat	30
4.8.5	Hardened steel square	31
4.8.6	Pipe thread checking block	32
5	TYPES OF GAGE	33
5.1	General	33
5.1.1	Scope	33
5.1.1.1	Standard gage blanks	33
5.1.1.2	Standard screw thread gages	33
5.1.2	"Go" gages	33
5.1.3	"Not Go" gages	33
5.1.4	Acceptance check gages	33
5.1.5	Wear limit check gages	33
5.1.6	Master setting gages	33
5.2	Plug gages	33
5.2.1	Plain cylindrical plug gages	33
5.2.1.1	Standard designs	33
5.2.1.2	Cylindrical plug gage, single-end, solid	34
5.2.1.3	Cylindrical plug gage, single-end, progressive	34
5.2.1.4	Cylindrical plug gage, double-end	34
5.2.1.5	Cylindrical plug gage, replaceable	34
5.2.1.6	Cylindrical plug gage, reversible	34
5.2.2	Plain taper plug gages	35
5.2.3	Thread plug gages	35
5.2.4	Taper threaded pipe plug gages	35
5.2.5	Taper plain pipe plug gages	35
5.2.6	Spline plug gages	36
5.2.6.1	Involute spline plug gages	36
5.2.6.2	Straight-sided spline plug gage	36
5.2.7	Alinement plug gages	36
5.2.8	Graduated plug gages	37
5.2.9	Flat plug gages	37
5.2.10	Miscellaneous plug gages	37

Paragraph		Page
5.3	Ring gages	37
5.3.1	Plain ring gages	37
5.3.2	Twin ring gages	37
5.3.3	Progressive ring gages	37
5.3.4	Taper ring gages	38
5.3.5	Thread ring gages	38
5.3.6	Taper threaded pipe ring gages	38
5.3.7	Taper plain pipe ring gages	39
5.3.8	Spline ring gages	39
5.4	Triroll gages	39
5.4.1	Threaded pipe triroll gages	39
5.4.2	Taper plain pipe triroll gages	40
5.5	Snap gages	40
5.5.1	Snap gage construction	40
5.5.2	Adjustable length gages	40
5.5.3	Combination ring and snap gages	40
5.5.4	Thread snap gages	40
5.5.4.1	Roll thread snap gages	40
5.5.4.2	Flat-anvil thread snap gages	41
5.5.4.3	Single-point thread snap gages	42
5.5.4.4	Segment roll thread snap gages	42
5.6	Miscellaneous and special gages	43
5.6.1	Flush pin gages	43
5.6.2	Spanner gages	43
5.6.3	Fixture gages	43
5.6.4	Concentricity gages	44
5.6.5	Template or profile gages	44
5.6.6	Functional gages	44
5.6.7	Chamber gages	45
5.7	Air gages	46
5.7.1	Pressure type air gage	46
5.7.2	Flow type air gage	46
5.7.3	Air snap gage	47
5.8	Bore inspection devices	47
5.8.1	Star gazes	47
5.8.2	Dial indicator bore gages	47
5.8.3	Horoscopes	49
5.8.4	Mirror and lamp devices	49
6	CARE, USE, AND MAINTENANCE	50
6.1	General	50
6.2	Surveillance of gages	50
6.2.1	Identification marking	50
6.2.2	Loan of gages to contractors	50
6.2.3	Cleaning	50

Paragraph		Page
6.2.4	Preservation procedure	50
6.2.5	Maintenance and control procedures	50
6.2.5.1	Gage records	50
6.2.5.2	Time limit checking system	51
6.2.5.3	Use of checker master setting gages	51
6.2.6	Damage control and correction	51
		51
6.2.6.1	Removal of nicks and burrs	51
6.2.6.2	Control of wear	51
6.2.6.3	Seizure and galling	51
6.2.6.4	Inspection of dropped gages	51
6.3	Application procedures	51
6.3.1	Forcing of gages	51
6.3.2	Method of applying snap gages	52
6.3.3	Method of applying small plug gages	52
6.3.4	Methods of applying thread gages	52
6.3.4.1	Function of thread gages	52
6.3.4.2	"Go" thread plug gages	53
6.3.4.3	"Not Go" thread plug gages	53
6.3.4.4	"Go" thread ring gages	53
6.3.4.5	"Not Go" thread ring gages	54
6.3.4.6	Roll thread snap gages	54
6.3.4.7	Standard taper pipe thread gages	55
6.3.4.8	Aeronautical type taper threaded pipe ANPT gages	56
6.3.4.9	L_1 and L_3 taper threaded pipe plug gages	56
6.3.4.10	Taper plain pipe plug gage	57
6.3.4.11	Threaded pipe triroll gage	58
6.3.4.12	Taper plain triroll gages	59
6.3.4.13	Threaded pipe ring gages	61
6.3.4.14	Taper plain ring gages	62
6.3.4.15	Special threaded pipe gaging conditions	62
6.3.4.16	Check or master setting thread plug gages	62
6.3.4.17	Check or setting taper threaded pipe plug gages	63
7	SURFACE ROUGHNESS MEASUREMENT	65
7.1	General	65
7.1.1	Definition	65
7.1.2	Standardization	65
7.1.3	Application to gages	65
7.2	Surface roughness measurement	65
7.2.1	Tracer type instruments	65
7.2.2	Profilometer	65
7.2.2.1	Tracer unit	65
7.2.2.2	Microinch meter	65
7.2.2.3	Mototrace	66
7.2.2.4	Glass roughness specimen	67
7.2.2.5	Interpretation of meter readings	67
7.2.2.6	Using the profilometer	68
7.2.2.7	Profilometer rotary pilotor	69
7.2.3	Brush surface analyzer	69
7.2.3.1	Pick-up arm	70
7.2.3.2	Surface plate	70
7.2.3.3	Drive head	70
7.2.3.4	Amplifier	70
7.2.3.5	Direct inking oscillograph	71
7.2.3.6	Interpreting the oscillograph chart	71
7.2.3.7	Root mean square meter	72
7.2.3.8	Glass calibration standard	72
7.2.3.9	Using the brush surface analyzer	73
7.2.4	Surface roughness comparator blocks	73
8	GAGE INSPECTION METHODS	75
8.1	General	75
8.1.1	Purpose	75
8.1.2	Scope	75
8.1.3	Arrangement	75
8.2	Laboratory conditions	75
8.2.1	Laboratory temperatures	75
8.2.2	Atmospheric conditions	75
8.2.3	Cleanliness	75
8.2.4	Lighting	75
8.2.5	Location of precision instrumerits	75
8.3	General inspection instructions	76
8.3.1	Drawings	76
8.3.2	Marking	76
8.3.3	Gage records cards	76
8.3.4	Precautions	76
8.3.5	Selecting the inspection method	77
8.3.6	Steps in the inspection process	77
8.3.6.1	Cleaning	77
8.3.6.2	Hardness measurement	77

Paragraph		Page
8.3.6.3	Demagnetizing	78
8.3.6.4	Visual impaction	78
8.3.6.5	Checking loosely toleranced dimensions	78
8.3.6.6	Checking for function	78
8.3.6.7	Checking closely tolerance dimensions	78
8.3.6.8	Sealing	79
8.3.7	Finishes	79
8.3.7.1	Requirements	79
8.3.7.2	Inspection	79
8.4	Care and use of inspection tools	79
8.4.1	General	79
8.4.2	Micrometer calipers	79
8.4.2.1	Outside micrometers	79
8.4.2.2	Inside micrometers	80
8.4.2.3	Micrometer depth gages	80
8.4.3	Vernier gages	81
8.4.3.1	Vernier calipers	81
8.4.3.2	Vernier depth gages	81
8.4.3.3	Vernier height gages	81
8.4.3.4	Vernier height gage with test indicator	82
8.4.4	Dial indicator gages	84
8.4.5	Surface plate and accessories	85
8.4.5.1	Surface plate	85
8.4.5.2	Angle iron and tool maker's knee	85
8.4.5.3	Parallels	86
8.4.5.4	Precision straight edge	87
8.4.5.5	Universal precision square	87
8.4.5.6	Planer gage	87
8.4.6	Roll holder	87
8.4.7	Hold-down fixture	88
8.4.8	Channel-bar fixture	88
8.4.9	Locating plate	89
8.5	Care and use of precision measuring instruments	89
8.5.1	General	89
8.5.2	Gage blocks and accessories	90
8.5.3	Sine bars and sine plates	92
8.5.4	Light wave measuring equipment	94
8.5.5	Optical instruments	97
8.5.5.1	Contour projector	97
8.5.5.2	Tool maker's microscope	99
8.5.6	Direct measuring equipment	100
8.5.6.1	Supermicrometer	100
8.5.6.2	Universal measuring machine	102
8.5.7	Mechanical and electrical comparators	102
8.5.7.1	Metron gages	102
8.5.7.2	Electolimit gages	102
8.5.7.3	Visual gages	103
8.5.7.4	Supersensitive comparator	105
8.5.7.5	Dial comparator	105
8.5.7.6	Dial bore gage	105
8.5.7.7	Using comparators	106
8.5.8	Indexing equipment	107
8.5.8.1	Precision indexing head	107
8.5.8.2	Bench center with sine bar indexing face plate	107
8.5.9	Hardness tester	107
8.6	Gage inspection of plain plug gages	108
8.6.1	Measurement with a bench micrometer	108
8.6.2	Measurement with a mechanical comparator	109
8.6.3	Measurement with a precision measuring machine	110
8.7	Inspection of tapered plugs	110
8.7.1	Measuring straightness and angle of taper	110
8.7.2	Checking gages when front face is not square	113
8.7.3	Checking diameters of taper plugs with rolls	114
8.7.4	Measuring the diameters of tapered plugs with roll and sine bar	115
8.7.5	Checking the diameter of tapered plugs with master rings	116
8.8	Alinement and concentricity plugs	117
8.9	Ring and receiver gages	122
8.9.1	Plain ring gages	122
8.9.1.1	Check plugs	122
8.9.1.2	Internal calipers	122
8.9.1.3	Dial bore gages	122
8.9.1.4	Casts	122
8.9.1.5	Internal measuring machine	122
8.9.1.6	Gage blocks	123
8.9.2	Receiver gages	123
8.9.2.1	Check plug and blueing (angle check)	123
8.9.2.2	Pencil lines and check plug (angle check)	123

Paragraph		Page
8.9.2.3	Sine bar and angle plate (angle check)	123
8.9.2.4	Precision balls (angle and diameter check)	123
8.9.2.5	Tapered check plugs (diameter check)	125
8.9.2.6	Calibrated tapered plugs (diameter check)	125
8.10	Inspection of snap gages	126
8.10.1	Plain and built-up snap gages	126
8.10.2	Adjustable snap gages	126
8.10.3	Large snap gages (all types)	127
8.11	Thread plug gages	127
8.11.1	Lead	127
8.11.2	Checking angle with a test tool	128
8.11.3	Checking angle with an optical comparator	129
8.11.4	Checking angle with a tool makers' microscope	132
8.11.5	Root	132
8.11.6	Pitch diameter	133
8.11.7	Major diameter	136
8.11.8	Concentricity	136
8.11.9	Finish	136
8.12	Inspection of thread ring gages	136
8.12.1	Thread form	136
8.12.2	Lead	137
8.12.3	Pitch diameter	138
8.12.4	Concentricity of pitch and minor diameters	139
8.12.5	Minor diameter	139
8.13	Inspection of tapered thread plug gages	139
8.13.1	Angle and relief	139
8.13.2	Lead	139
8.13.3	Pitch diameter and taper	140
8.13.4	Major diameter	144
8.13.5	Convolution	145
8.14	Inspection of tapered thread ring gages	145
8.15	Inspection of thread snap gages	146
8.16	Inspection of qualifying thread gages	146
8.16.1	Checking qualifying thread gages with a contour projector	147
8.16.2	Checking qualifying threads with a thread template	148
8.17	Inspection of segmental thread gages	150
8.18	Inspection of Acme thread gages	151
8.19	Inspection of modified square thread gages	151
8.20	Inspection of flush pin gages	152
8.20.1	General	152
8.20.2	Depth measuring flush pin gage	152
8.20.3	Length measuring flush pin gages	153
8.20.4	Post type flush pin gages	154
8.20.5	Flush pin gages for location of holes	155
8.20.6	Tapered flush pin gages	156
8.20.7	Gooseneck flush pin gages	156
8.21	Inspection of profile gages	157
8.21.1	Template gages for profile of radius	157
8.21.1.1	Checking radii where great accuracy is not required	158
8.21.1.2	Checking radii where accuracy is required	158
8.21.1.3	Checking radii with gage blocks, tool maker's buttons and parallels	159
8.21.1.4	Checking template gages with special indicator fixture	165
8.21.2	Template gages for profile of angle	166
8.21.3	Profile plug gages	169
8.21.3.1	Measuring plug with plain radius	169
8.21.3.2	Measuring profile ogive check plugs with single radius	169
8.21.3.3	Measuring profile ogive check plugs with double radius	171
8.21.3.4	Measuring plugs with convex and concave radii	172
8.22	Inspection of fixture gages	172
8.22.1	Flush pin type fixture gages	172
8.22.2	Indicator type fixture gages	174
8.23	Inspection of miscellaneous gages	175
8.23.1	Dial indicator gages	175
8.23.2	Special indicator snap gages	176

Paragraph		Page
8.23.3	Spanner gages	176
8.23.4	Dovetail gages	177
8.23.5	Spline gages	182
8.23.6	Spline ring gages	184
8.23.7	Tapered spline gages	185
8.23.8	Large gages	185
8.23.9	Cams	186
8.24	Checking gages for bear	187
8.24.1	Plain plug gages	187
8.24.2	Plain ring gages	188
8.24.3	Thread plug gages	188
8.24.4	Thread ring gages	188
8.24.5	Thread concentricity gages	189
8.24.6	Snap gages	189
8.24.7	Indicator gages	189
8.24.8	Flush pin gages	189
8.24.9	Fixture gages	189
8.25	Calibrating thread measuring wires	190
8.26	Calibrating gage blocks	190
8.26.1	Suggestions in reinspecting gage blocks	190
8.26.2	"A" precision gage blocks	193
8.26.3	"B" precision gage blocks or used gage blocks	193
8.27	Helix angles	194
8.27.1	Tables for American national coarse and fine thread series	194
8.27.2	Chart for determining helix angles	194
8.27.3	Thread flank angle correction factors	194
8.27.4	Tables for thread lead checking	197
8.27.5	Tables of equivalent hardness numbers	197
8.27.6	Key to table of equivalent hardness numbers	197

LIST OF FIGURES

Figure 1. Unilateral tolerances.
Figure 2. Bilateral tolerances.
Figure 3. Unequal bilateral tolerances.
Figure 4. Plug gage tolerance.
Figure 5. Built-up snap gage tolerances.
Figure 6. Ring gage tolerances.
Figure 7. Steel rule.
Figure 8. Hook rule.
Figure 9. Steel rule with holder.
Figure 10. Rule depth gage.
Figure 11. Adjustable steel square.
Figure 12. Combination set.
Figure 13. Precision gage block set.
Figure 14. Gear and thread measuring wires.
Figure 15. Cylindrical square.
Figure 16. Vernier caliper.
Figure 17. Vernier scale.
Figure 18. Vernier depth gage.
Figure 19. Vernier height gage.
Figure 20. Gear tooth vernier caliper.
Figure 21. Vernier bevel protractor.
Figure 22. Vernier on bevel protractor.
Figure 23. Micrometer caliper.
Figure 24. Micrometer barrel and thimble scales.
Figure 25. Vernier micrometer scales.
Figure 26. Examples of micrometer vernier readings.
Figure 27. Screw thread micrometer caliper.

Figure 28. Inside micrometer (caliper-type).
Figure 29. Inside micrometer (rod-type).
Figure 30. Micrometer depth gage.
Figure 31. Supermicrometer.
Figure 32. Universal measuring machine.
Figure 33. Electrolimit comparator.
Figure 34. Visual gage.
Figure 35. Dial comparator.
Figure 36. Optical flats.
Figure 37. Optical comparator.
Figure 38. Contour measuring projector.
Figure 39. Tool maker's microscope.
Figure 40. Optical dividing head.
Figure 41. Sine bar.
Figure 42. Sine bar set upon gage blocks.
Figure 43. Sine plate.
Figure 44. Sine plate with base plate.
Figure 45. Dial indicator (gear train type).
Figure 46. Dial test indicator.
Figure 47. Surface plate.
Figure 48. Tool maker's flat.
Figure 49. Hardened steel square.
Figure 50. Pipe thread gage checking block.
Figure 51. Cylindrical plug gage, single-end solid.
Figure 52. Cylindrical plug gage, single-end progressive.
Figure 53. Cylindrical plug gage, double-end.
Figure 54. Cylindrical plug gage, replaceable.
Figure 55. Cylindrical plug gages, reversible.
Figure 56. Plain taper plug gages.
Figure 57. Thread plug gages.
Figure 58. Taper threaded pipe plug gages.
Figure 59. Taper plain pipe plug gages.
Figure 60. Involute spline plug gage.
Figure 61. Straight-sided spline plug gage.
Figure 62. Alinement plug gages.
Figure 63. Graduated plug gage.
Figure 64. Flat plug gage.
Figure 65. Miscellaneous plug gages.
Figure 66. Plain ring gages.
Figure 67. Twin ring gages.
Figure 68. Progressive ring gages.
Figure 69. Thread ring gages.
Figure 70. Taper threaded pipe ring gage.
Figure 71. Taper plain pipe ring gage.
Figure 72. Spline ring gages.
Figure 73. Threaded pipe triroll gage.
Figure 74. Taper plain pipe triroll gage.
Figure 75. Adjustable snap gages.
Figure 76. Adjustable length gage.
Figure 77. Combination ring and snap gage.

Figure 78. Roll thread snap gage.
Figure 79. Flat-anvil thread snap gage.
Figure 80. Single-point thread snap gage.
Figure 81. Segment roll thread snap gage.
Figure 82. Flush pin gage.
Figure 83. Spanner gage.
Figure 84. Fixture gage.
Figure 85. Concentricity gage.
Figure 86. Template or profile gage.
Figure 87. Functional gage.
Figure 88. Chamber gage.
Figure 89. Air gage.
Figure 90. Star gage.
Figure 91. Dial indicator bore gage.
Figure 92. Proper method of inserting “Go” or “Not Go” thread plug gage.
Figure 93. Improper method of inserting “Go” or “Not Go” thread plug gage.
Figure 94. Aline bolt with “Go” rolls and lower into gage. Black line on screw shows orientation of gage.
Figure 95. “Not Go” rolls stop bolt when it passes through “Go” rolls.
Figure 96. Bolt is turned ¼ turn at “Not Go” rolls to check for out-of-roundness. Note the new position of the black line on bolt.
Figure 97. Raise bolt back through “Go” rolls and check further for out-of-roundness.
Figure 98. Assembled threaded pipe and coupling at handtight engagement, showing dimensions L_1, L_2, and L_3.
Figure 99. L_1 gage screwed into product. The gage’s basic notch has stopped at fitting’s face.
Figure 100. Pipe fitting shown on figure 99 is next checked with L_3 gage, and here stops with basic notch within ½ turn (thread) from the product face.
Figure 101. Taper plain plug gage is used next on product shown on figures 99 and 100. Here it has stopped with basic notch at face of product. Fitting is acceptable.
Figure 102. Excessive shake or play of taper plain pipe plug gage is cause for rejection of product.
Figure 103. Two fittings cross-sectioned for inspection, Center object is proof cast.
Figure 104. Fitting screwed into threaded pipe triroll gage. Small end of fitting is flush with basic step.
Figure 105. Taper plain triroll gage with fitting inserted. Flush pin shows fitting to be basic.
Figure 106. Setting plug gage having full and truncated threads on each member.
Figure 107. Taper pipe thread setting plug gage.
Figure 108. Threaded pipe triroll gage set correctly.
Figure 109. Taper plain setting pipe threaded plug gage.
Figure 110. Taper plain triroll gage.
Figure 111. Profilometer with mototrace.
Figure 112. Tracer unit with interchangeable skid mounts.
Figure 113. Microinch meter and scale-selector switch.
Figure 114. Glass roughness specimen.
Figure 115. Profilometer rotary pilotor.
Figure 116. Brush surface analyzer.
Figure 117. Pick-up arm.
Figure 118. Amplifier.
Figure 119. Direct inking oscillograph.
Figure 120. Root mean square meter.
Figure 121. Glass calibration standard.

Figure 122. Surface roughness comparator blocks.
Figure 123. Adjusting micrometer depth gage.
Figure 124. Use of vernier height gage.
Figure 125. Use of vernier height gage with test indicator.
Figure 126. Error in test indicator.
Figure 127. Method of placing heavy object on a surface plate.
Figure 128. Tool maker's knee—universal angle iron.
Figure 129. Checking tool maker's knee for squareness.
Figure 130. Checking squareness by means of tool maker's buttons.
Figure 131. Universal precision square.
Figure 132. Planer gage.
Figure 133. Reversible roll holder.
Figure 134. Conventional roll holder.
Figure 135. Hold-down fixtures.
Figure 136. Channel bar fixture.
Figure 137. Locating plate.
Figure 138. Checking profile gage on locating plate.
Figure 139. Snap gage made of gage blocks.
Figure 140. Sine plate with centers.
Figure 141. Use of a sine plate.
Figure 142. Measurement by means of light waves.
Figure 143. Computing error in flatness.
Figure 144. Interference pattern.
Figure 145. pleasuring height with an optical flat.
Figure 146. 0–2" light wave micrometer with roll anvil, etc.
Figure 147. Aligning fixture for projector.
Figure 148. Positioning fixture for tool maker's microscope.
Figure 149. Setting up bench micrometer for measurement over rolls.
Figure 150. Metron comparator.
Figure 151. Electrolimit comparator.
Figure 152. Electrolimit height gage.
Figure 153. Pressure regulator for use with visual gage thread checking attachment (cover removed to show construction).
Figure 154. Universal external visual gage.
Figure 155. Supersensitive comparator.
Figure 156. Dial comparator.
Figure 157. Dial bore gage.
Figure 158. Precision indexing head.
Figure 159. Bench center with sine bar indexing face plate.
Figure 160. Rockwell hardness tester.
Figure 161. Measuring small plug gages.
Figure 162. Measuring large plug gages.
Figure 163. Checking front face of plug for perpendicularity.
Figure 164. Checking taper on sine plate.
Figure 165. Measuring taper on special sine plate fixture.
Figure 166. Measuring taper and diameter of tapered plug.
Figure 167. Set-up for measuring taper.
Figure 168. Tapered plug-drawing specifications.
Figure 169. Computing tapered plug diameter from measurements over rolls.
Figure 170. Finding location of datum diameter.

Figure 171. Checking diameter with roll and sine bar.
Figure 172. Method of clamping gage over sine bar.
Figure 173. Roll for checking taper plug.
Figure 174. Length of block for odd size roll.
Figure 175. Checking tapered plug with check rings.
Figure 176. Computing diameter of tapered plug.
Figure 177. Computing location of intersection (small taper over large taper).
Figure 178. Computing location of intersection (large taper over small taper).
Figure 179. Computing distances from back face to intersections of tapers.
Figure 180. Special fixture for checking taper and diameter of tapered plugs.
Figure 181. Checking taper with special fixture.
Figure 182. Checking length to datum diameter with special fixture.
Figure 183. Checking tapered ring on sine bar.
Figure 184. Set-up for measuring the angle and the diameter of an internal conical surface.
Figure 185. Computing internal angle from measurements over two balls.
Figure 186. Computing diameter at large end of taper from measurement over ball.
Figure 187. Measuring length to datum diameter by means of calibrated plug.
Figure 188. Checking parallelism of anvils on large snap gages.
Figure 189. Checking thread angle by means of a test tool.
Figure 190. Test tools and correction spacers for checking thread angle.
Figure 191. Relationship between axial plane and plane of projection.
Figure 192. Computation of helix angle.
Figure 193. Correction factor for thread angle.
Figure 194. Common visual errors found in thread gages.
Figure 195. Root inspection of thread gages.
Figure 196. Three-wire method of measuring pitch diameter of thread plug gages.
Figure 197. Pitch line.
Figure 198. Best size wire.
Figure 199. Height of wire above vertex.
Figure 200. Height of pitch line above vertex.
Figure 201. Method of making cast of thread ring gage.
Figure 202. Making lead cast of thread ring.
Figure 203. American gage design standard thread ring locking device. 1, Locking screw; 2, Sleeve; 3, Adjusting screw; 4, Body; 5, Adjusting slots; 6, Adjusting slot terminal hole; 7, Locking slot.
Figure 204. Measurement of pitch diameter of taper thread gages by the two-wire method.
Figure 205. Locating height of fixed measuring wire.
Figure 206. Computing pitch diameter and taper of taper thread plug.
Figure 207. Specification-¾-14 N. P. T. thread plug gage.
Figure 208. Set-up for measuring pitch diameter with taper fixture.
Figure 209. Calibrating taper thread fixture.
Figure 210. Taper thread checking fixture.
Figure 211. Hold-down wire for taper thread checking fixture.
Figure 212. Measuring major diameter over rolls.
Figure 213. Measuring major diameter pipe threads by roll and gage block method.
Figure 214. Thread snap gages.
Figure 215. Setting thread snap gage.
Figure 216. Set-up for checking qualified threads on a projector.
Figure 217. Measuring length to reference surface.
Figure 218. Thread checking template.

Figure 219. Special angle iron for supporting thread template.
Figure 220. Set-up for checking qualifying thread gage (top view).
Figure 221. Measuring major diameter of segmental thread gage.
Figure 222. Set-up for checking depth measuring flush pin gage.
Figure 223. Set-up for checking length measuring flush pin gage—pin method.
Figure 224. Checking length measuring flush pin gage—pin method.
Figure 225. Set-up for checking length measuring flush pin gage—micrometer method.
Figure 226. Checking length measuring flush pin gage—micrometer method.
Figure 227. Post type flush pin gage.
Figure 228. Conditions commonly found on tapered pins.
Figure 229. Flush pin for measuring location of holes.
Figure 230. Set-up for checking small conical flush pin gage.
Figure 231. Computing length to apex on tapered flush pin gage.
Figure 232. Measuring radius with projector.
Figure 233. Set-up for checking radius with indicator.
Figure 234. Checking radius with fixed button and gage blocks.
Figure 235. Checking uniformity of radius.
Figure 236. Checking inside radius (with no precision reference surface).
Figure 237. Checking inside radius (where radius is tangent to straights surface).
Figure 238, Checking inside radius (where radius is not tangent to straight surface).
Figure 239. Computing distance from origin to straight surface.
Figure 240. Computing vertical distance from origin to center of roll.
Figure 241. Computing distance from parallel to roll.
Figure 242. Setting template gage in position.
Figure 243. Checking radius on template gage.
Figure 244. Checking outside radius (where radius is tangent to straight surface).
Figure 245. Checking outside radius (where radius is not tangent to straight surface).
Figure 246. Set-up for checking a large radius with a special indicator fixture.
Figure 247. Checking a large radius with a special indicator fixture.
Figure 248. Set-up for checking a small radius with a special indicator fixture.
Figure 249. Checking a small radius with a special indicator fixture.
Figure 250. Checking template gage for location of intersection.
Figure 251. Measuring distance to apex on template gage.
Figure 252. Checking template gage for accuracy of angles.
Figure 253. Checking outside radius (where there is no precision reference surface).
Figure 254. Measuring profile ogive check gage.
Figure 255. Measuring profile check plug (single radius).
Figure 256. Measuring second radius of profile check plug.
Figure 257. Computing point of tangency of double radius.
Figure 258. Computing variable angle in double radius measurements.
Figure 259. Computing position of roll in double radius measurement.
Figure 260. Computing measurement over rolls in double radius measurement,
Figure 261. Measuring outside radius of profile plug with outside and inside radii.
Figure 262. Measuring inside radius of profile plug with outside and inside radii.
Figure 263. Checking flush pins and steps on fixture gage.
Figure 264. Checking angle of dovetail gage.
Figure 265. Checking female dovetail gage.
Figure 266. Checking male dovetail gage.
Figure 267. Measuring width of tapered dovetail on an indexing plate.
Figure 268. Computing relationship of angles of tapered dovetail gage.

Figure 269. Checking taper dovetail on sine plate.
Figure 270. Measuring distance between apexes of tapered dovetail-ball method.
Figure 271. Measuring angles, of sides of tapered dovetail-ball method.
Figure 272. Computing distance between apexes—ball method of measurement.
Figure 273. Checking spline ring gage.
Figure 274. Checking large locating ring gage.
Figure 275. Checking a cam.
Figure 276. Set-up for checking parallelism of gage blocks.
Figure 277. Horizontal check for gage block parallelism.
Figure 278. Vertical check for gage block parallelism.
Figure 279. Rough check of difference in length of two gage blocks.
Figure 280. Check of difference in length of two gage blocks.
Figure 281. Chart for determining helix angles of screw threads.

LIST OF TABLES

Page 3 Table I Tolerances for plain cylindrical plug and ring gages.
Page 194 Table II American national coarse thread series
Page 194 Table III American national fine thread series
Page 195 Table IV 60 degree included thread angle
Page 195 Table V 29 degree included thread angle
Page 197 Table VI Thread lead checking
Page 197 Table VII Equivalent hardness numbers

MILITARY STANDARD

GAGE INSPECTION

TO ALL ACTIVITIES :

1. THE FOLLOWING PAGES OF MIL-STD-120 HAVE BEEN REVISED AND SUPERSEDE THE PAGES LISTED:

NEW PAGES	DATE	SUPERSEDED PAGE	DATE
89	9 SEPTEMBER 1963	89	12 DECEMBER 1950
90	" " "	90	" " "
169	" " "	169	" " "

2. RETAIN THIS NOTICE AND INSERT THE TABLE OF CONTENTS.

1

PURPOSE AND SCOPE

1.1 GENERAL

1.1.1 Scope. This standard is to provide correlated technical information applicable to the inspection of gages, special tools, and measuring devices. The principal subjects covered are nomenclature, tolerances and fits, measuring tools and equipment, gages, and methods of measurement and inspection. Details of gage design are not included.

1.1.2 Purpose. The purpose of gaging is to determine compliance of the component parts of a mechanical product with the dimensional requirements of contracts, drawings, and specifications, whether such product is made by a single manufacturer or whether parts to be assembled are made by several manufacturers variously located. Gaging thereby assures the proper functioning and interchangeability of parts, that is, one part will fit in the same place as an-y similar part and perform the same function, whether the part is for the original assembly or replacement in service.

1.1.3 Classification of gages and measuring equipment. Gages and measuring equipment are classified as follows:

1.1.3.1 Length standards. Standards of length and angle from which all measurements of gages are derived consist of precision gage blocks, end measuring rods, line-graduated standards, master disks, calibrated wires and rolls, precision squares, graduated circles, and similar items.

1.1.3.2 Master gages. Master gages are made to their basic dimensions as accurately as possible and are used for reference, such as for checking or setting inspection or manufacturer's gages.

1.1.3.3 Inspection gages. Inspection gages are used by the representative of the purchasing agency to inspect products for *acceptance.* These gages are made in accordance with established design requirements. Inasmuch as inspection gages are subjected to continuous use, a gage maker's tolerance will always be applied and a wear allowance, where applicable, may be included in the design of these gages. Tolerances of inspection gages are prescribed by specified drawing limits.

1.1.3.4 Manufacturer's gages. Manufacturer's gages are used by the manufacturer or contractor for inspection of parts during *production.* In order that the product will be within the limits of the inspection gages, manufacturer's or working gages should have dimensional limits, resulting from gage tolerances and wear allowances, slightly farther from the specified limits of the parts inspected.

1.1.3.5 Nonprecision measuring equipment. Nonprecision measuring equipment are simple tools such as rules and plain protractors used to measure by means of line graduations such as those on a scale.

1.1.3.6 Precision measuring equipment. Precision measuring equipment are tools used to measure in thousandths of an inch or finer and usually employ a mechanical, electrical or optical means of magnification to facilitate reading.

1.1.3.7 Comparators. Comparators are precision measuring equipment used for comparative measurements between the work and a contact standard, such as a gage or gage blocks.

1.1.3.8 Optical comparators and gages. Optical comparators and gages are those which apply optical methods of magnification exclusively. Examples are optical flats, tool maker's microscopes, and projection comparators. Projection comparators usually provide for absolute measurements as well as for comparative measurements.

2

DIMENSIONS AND TOLERANCES

2.1 GENERAL. This section presents definitions relating to dimensions and tolerances and standard practice relative to gage tolerances and wear allowances. This subject is dealt with further in MIL-STD-8.

2.2 DEFINITIONS

2.2.1 Dimension. A dimension is a specified size of a geometrical characteristic such as a diameter, length, angle, circumference, or center distance.

2.2.2 Nominal size. The nominal size is the designation which is used for the purpose of general identification.

2.2.3 Basic size. The basic size of a dimension is the theoretical size from which the limits of size for that dimension are derived by the application of the allowance and tolerances.

2.2.4 Design size. The design size of a dimension is the size in relation to which the limits of tolerance for that dimension are assigned.

2.2.5 Actual size. The actual size of a dimension is the measured size of that dimension on an individual part.

2.2.6 Limits of size. These limits are the maximum and minimum sizes permissible for a specific dimension.

2.2.7 Fit. The fit between two mating parts is the relationship existing between them with respect to the amount of clearance or interference which is present when they are assembled.

2.2.8 Tolerance. The tolerance on a dimension is the total permissible variation in its size. The tolerance is the difference between the limits of size.

2.2.9 Allowance. An allowance is an intentional difference in correlated dimensions of mating parts. It is the minimum clearance (positive allowance) or maximum interference (negative allowance) between such parts.

2.3 TOLERANCES. Variation in size can be restricted but not avoided. However, a certain amount of variation can be tolerated without impairing the functioning of a part. The purpose of tolerances is to confine such variation within definite limits.

2.3.1 Unilateral tolerances. Unilateral tolerances are those which are applied to the basic or design size in one direction only. The unilateral system of tolerances will generally be used on all drawings. The application of unilateral tolerances is as shown on figure 1.

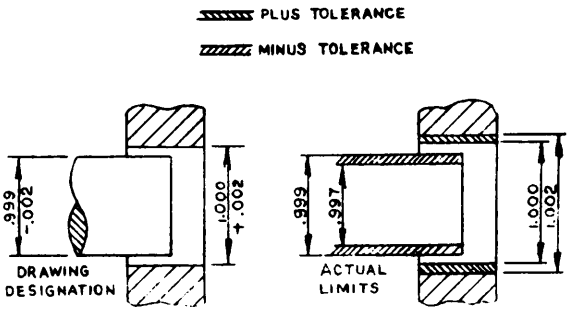

Figure 1. Unilateral tolerances.

2.3.2 Bilateral tolerances. Bilateral tolerances are those which are applied to the basic or design size in both directions. The basic or design size may or may not be the mean size, as the plus and minus tolerances are not necessarily equal. The application of bilateral tolerances is as shown on figures 2 and 3.

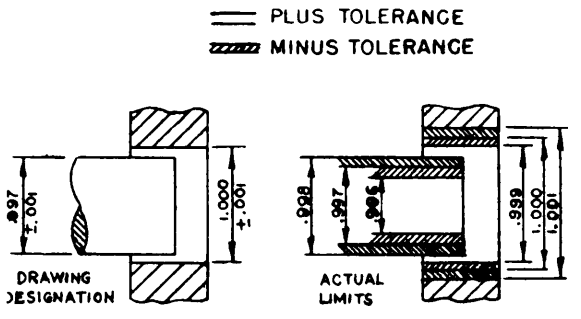

Figure 2. Bilateral tolerances.

2.3.3 Gage tolerances. Gage tolerances are applied to the gaging dimensions of gages in

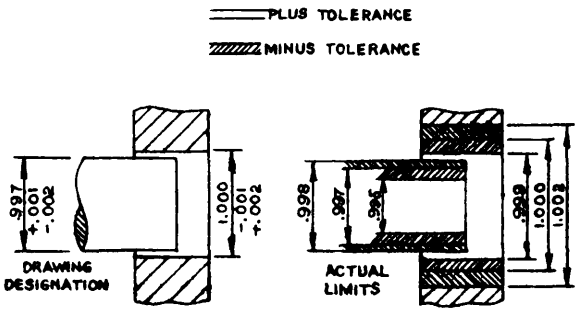

Figure 3. Unequal bilateral tolerances.

order to limit variations in size during their manufacture. In general practice, gage tolerances should not exceed 10 percent of the tolerance of the part to be gaged.

2.3.3.1 Tolerances on plain gages. Tolerances for plain cylindrical plug and ring gages have been standardized in four classes according to nominal size and the degree of accuracy necessary to cover most gaging operations, as shown in table I.

TABLE I. TOLERANCES FOR PLAIN CYLINDRICAL PLUG AND RING GAGES

Size range	Total tolerance	Wear allowance	Tolerance	
			Go	Not go
Up to 0.825	0.0005	0.00000	0.00004	0.00004
0.825 to 1.510		.00000	.00006	No not go gages, snug fit on go
1.510 to 2.510		.00000	.00008	
2.510 to 4.510		.00000	.00010	
4.510 to 6.510		.00000	.00013	
6.510 to 8.510		.00000	.00015	
8.510 to 10.510		.00000	.00017	
10.510 up		.00000	.00020	
Up to 0.825	.0010	.00010	.00005	.00005
0.825 to 1.510		.00010	.00006	.00006
1.510 to 2.510		.00000	.00008	.00008
2.510 to 4.510		.00000	.00010	.00010
4.510 to 6.510		.00000	.00013	No not go gages, snug fit on go
6.510 to 8.510		.00000	.00015	
8.510 to 10.510		.00000	.00017	
10.510 up		.00000	.00020	
Up to 0.825	.0020	.00010	.00010	.00010
0.825 to 1.510		.00010	.00010	.00010
1.510 to 2.510		.00010	.00010	.00010
2.510 to 4.510		.00010	.00010	.00010
4.510 to 6.510		.00000	.00020	.00013
6.510 to 8.510		.00000	.00020	.00016
8.510 to 10.510		.00000	.00020	.00020
10.510 up		.00000	.00020	.00020
Up to 0.825	.0030	.00010	.00010	.00010
0.825 to 1.510		.00010	.00020	.00010
1.510 to 2.510		.00010	.00020	.00010
2.510 to 4.510		.00010	.00020	.00010
4.510 to 6.510		.00010	.00020	.00020
6.510 to 8.510		.00010	.00020	.00020
8.510 to 10.510		.00000	.00030	.00020
10.510 up		.00000	.00030	.00030
Up to 0.825	.0040	.00020	.00020	.00010
0.825 to 1.510		.00020	.00020	.00010
1.510 to 2.510		.00020	.00020	.00010
2.510 to 4.510		.00020	.00020	.00020
4.510 to 6.510		.00020	.00030	.00020
6.510 to 8.510		.00020	.00030	.00020
8.510 to 10.510		.00010	.00040	.00020
10.510 to 12.510		.00010	.00040	.00020
12.510 up		.00010	.00050	.00020
Up to 0.825	.005	.00030	.00020	.00010
0.825 to 1.510		.00030	.00020	.00010
1.510 to 2.510		.00030	.00020	.00010
2.510 to 4.510		.00020	.00020	.00020
4.510 to 6.510		.00020	.00030	.00020
6.510 to 8.510		.00020	.00030	.00020
8.510 to 10.510		.00020	.00040	.00020
10.510 to 12.510		.00010	.00050	.00030
12.510 up		.00010	.00050	.00030
Up to 0.825	.006	.00030	.00020	.00010
0.825 to 1.510		.00030	.00020	.00010
1.510 to 2.510		.00030	.00020	.00010
2.510 to 4.510		.00030	.00020	.00020
4.510 to 6.510		.00020	.00030	.00020
6.510 to 8.510		.00020	.00030	.00030
8.510 to 10.510		.00020	.00040	.00030
10.510 to 12.510		.00020	.00050	.00040
12.510 up		.00010	.00060	.00040

Size range	Total tolerance	Wear allowance	Tolerance	
			Go	Not go
Up to 0.825	0.007	0.00040	0.00020	0.00010
0.825 to 1.510		.00040	.00020	.00010
1.510 to 2.510		.00030	.00020	.00020
2.510 to 4.510		.00030	.00030	.00020
4.510 to 6.510		.00030	.00030	.00030
6.510 to 8.510		.00030	.00040	.00030
8.510 to 10.510		.00020	.00050	.00030
10.510 to 12.510		.00020	.00060	.00040
12.510 to 14.510		.00020	.00070	.00040
14.510 up		.00010	.00080	.00050
Up to 0.825	.008	.00040	.00020	.00010
0.825 to 1.510		.00040	.00020	.00010
1.510 to 2.510		.00040	.00020	.00020
2.510 to 4.510		.00030	.00030	.00030
4.510 to 6.510		.00030	.00040	.00030
6.510 to 8.510		.00030	.00040	.00040
8.510 to 10.510		.00030	.00050	.00040
10.510 to 12.510		.00020	.00060	.00050
12.510 to 14.510		.00020	.00070	.00050
14.510 up		.00020	.00080	.00060
Up to 0.825	.009	.00040	.00020	.00010
0.825 to 1.510		.00040	.00030	.00010
1.510 to 2.510		.00040	.00030	.00020
2.510 to 4.510		.00040	.00040	.00030
4.510 to 6.510		.00040	.00040	.00030
6.510 to 8.510		.00040	.00050	.00040
8.510 to 10.510		.00030	.00060	.00040
10.510 to 12.510		.00030	.00070	.00050
12.510 to 14.510		.00030	.00080	.00050
14.510 up		.00030	.00090	.00060
Up to 0.825	.010	.00040	.00030	.00010
0.825 to 1.510		.00040	.00030	.00020
1.510 to 2.510		.00040	.00040	.00030
2.510 to 4.510		.00040	.00040	.00030
4.510 to 6.510		.00040	.00050	.00040
6.510 to 8.510		.00040	.00060	.00040
8.510 to 10.510		.00040	.00070	.00050
10.510 to 12.510		.00040	.00080	.00050
12.510 to 14.510		.00030	.00090	.00060
14.510 up		.00030	.00100	.00060
Up to 1.510	.012	.00040	.00060	.00020
1.510 to 4.510		.00040	.00070	.00030
4.510 to 8.510		.00040	.00080	.00040
8.510 to 12.510		.00040	.00090	.00050
12.510 up		.00030	.00100	.00060
Up to 1.510	.014	.00040	.00060	.00020
1.510 to 4.510		.00040	.00080	.00030
4.510 to 8.510		.00040	.00100	.00040
8.510 to 12.510		.00040	.00120	.00050
12.510 up		.00040	.00140	.00060
Up to 2.510	.016	.00040	.00080	.00020
2.510 to 6.510		.00040	.00100	.00040
6.510 to 12.510		.00040	.00120	.00060
12.510 up		.00040	.00140	.00080
Up to 4.510	.020	.00040	.00100	.00040
4.510 to 6.510		.00040	.00100	.00060
6.510 to 12.510		.00040	.00150	.00080
12.510 up		.00040	.00200	.00100
Up to 4.510	.025 up	.00040	.00100	.00080
4.51 to 6.51		.00040	.00100	.00100
6.51 to 12.51		.00040	.00150	.00150
12.51 up		.00040	.00200	.00200

2.3.3.1.1 Class XX (plug gages only). Class XX gages are precision lapped to the smallest practicable tolerances and are commonly applied to master gages and set-up standards.

2.3.3.1.2 Class X (plug and ring gages). Class X gages are precision lapped to close tolerances for many types of masters and the highest quality working and inspection gages.

2.3.3.1.3 Class Y (plug and ring gages). Class Y gages have a good lapped finish with slightly larger tolerances and are commonly applied to working gages. NOTE: X and Y classification and tolerances for plain cylindrical plug and ring gages should not be confused with X and Y classification and tolerances for thread gages.

2.3.3.1.4 Class Z (plug and ring gages). Class Z gages have a commercial finish, ground and polished, but not fully lapped, and are used for working gages where part tolerances are large.

2.3.3.2 Tolerance for thread g a g es. Standard tolerances for thread plug and ring gages and threaded setting plugs are tabulated in the current issue of National Bureau of Standards Handbook H28, Screw Thread Standards for Federal Services, and are as follows :

2.3.3.2.1 W thread gages. W thread gage tolerances represent the highest commercial grade of accuracy or workmanship. They are especially applicable to truncated setting plugs for thread ring gages and to gages used for threaded products made to special close tolerances.

2.3.3.2.2 X thread gages. X thread gage tolerances are larger than W tolerances and are suitable for inspection and setting gages except where W tolerances may be more desirable.

2.3.3.2.3 Y thread gages. Y thread gage tolerances are larger than X thread gage tolerances and in addition provide standard wear allowances. Y gages are considered suitable for inspection and working gages for classes 1 and 2 threads, ¼ inch diameter and larger. They may also be used as working gages for classes 2 and 3.

23.4 Gage wear allowance. A wear allowance on a "go" gage is an intentional difference between the nominal or specified size of the gage and the basic or design size of the part. Its purpose is to provide for a moderate amount of wear to occur before the gage is worn beyond the product limit. Wear allowance, when required, is applied on all "go" gages where the part rubs or presents a wearing action to the gage. When part tolerances are very small, it is not feasible to provide a wear allowance because the wear allowance, plus the required gage tolerance, would deprive the part manufacturer of too much of his tolerance. other exceptions are dial indicator gage assemblies and adjustable snap gages which may be reset as soon as they wear materially, and flush pin gages which may have the step reground (see figs. 4,5, and 6).

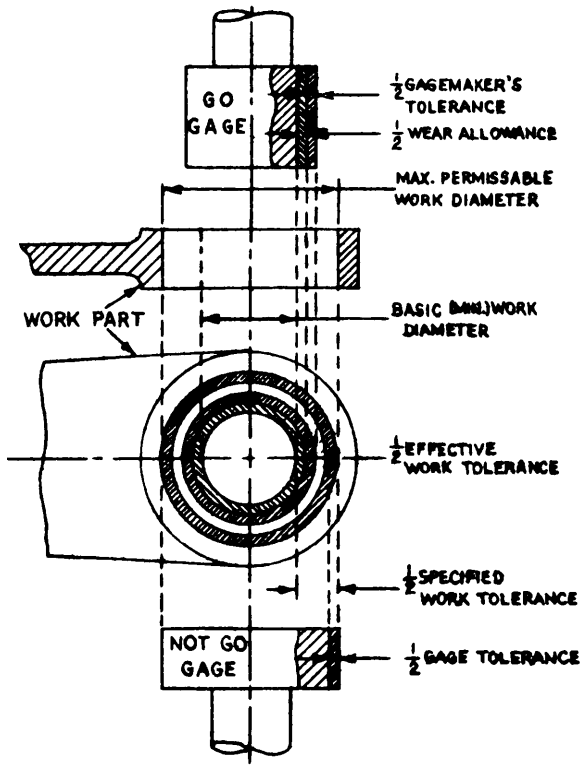

Figure 4. Plug gage tolerance.

2.3.5 Relation of gage limits to part limits. The limits of the part, as specified on the drawings, shall not be exceeded as a result either of tolerance or wear of the gages. Therefore, the extreme sizes for all gages shall not exceed the extreme limits of the part to be

gaged. All variations in the gage, whatever their cause or purpose, shall bring the gage within these extreme limits. Thus a gage that checks a minimum dimension may be larger, but never smaller, than the minimum size specified for the part to be gaged. Likewise, the gage that checks the maximum dimension may be smaller, but never larger, than the maximum size specified for the part to be gaged.

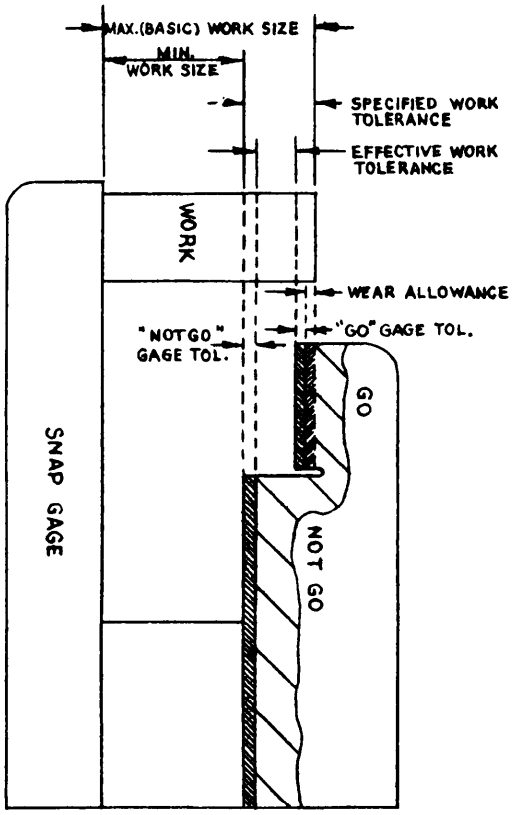

Figure 5. Built-up snap gage tolerances.

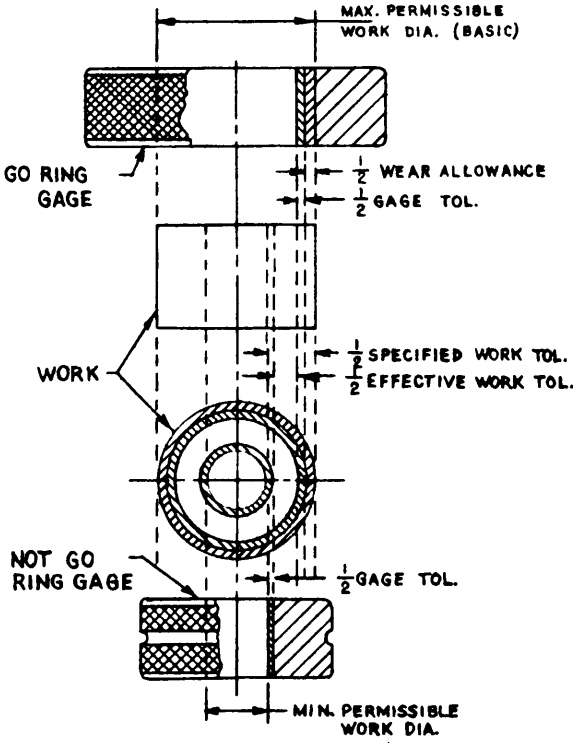

Figure 6. Ring gage tolerances.

2.3.6 Disputed rejections. Any part which is so close to either rejection limit as to be improperly rejected, either as a result of tolerance or wear of the inspection gages, will be reinspected, using a gage as close to the product limit as is practicable, or by use of precision measuring instruments. Any observational errors in the reinspection must, however, be in the direction of safety rather than in the direction of danger of acceptance of improper parts.

3

NONPRECISION MEASURING EQUIPMENT

3.1 GENERAL This section describes various commercially available nonprecision measuring equipment. Such equipment normally are tools used in the inspection of parts when quantities are small and the tolerances are sufficiently large to permit satisfactory application. For example, line-graduated hand measuring tool, such as a rule, does not control accuracy of measurement beyond the smallest graduation on its scale. The scale is usually read to its nearest graduation.

3.2 DESCRIPTION

3.2.1 Steel rule. The steel rule (see fig. 7) is a line-graduated measuring instrument which is read by the comparison of its scale with the edge or surface to be measured. Steel rules are made in various shapes or sizes and with various attachments and refinements. The 6-inch steel rule is most frequently used in the shop. Rules in the inch system are graduated in binary fractions down to $^1/_{64}$ inch, in decimal fractions down to one-hundredth of an inch. They are also available in the metric system. A large number of combinations of scales is available. A rule commonly has four scales, a coarse and a fine scale on each side. The scales on one side normally run in reverse to those on the other. Flexible rules in thin tempered spring steel allow measurements to be taken over curved or warped surfaces. Rules having end scales facilitate measurements in restricted space.

Fillet rules which have one end corner trimmed at an angle allow measurements to be made across corner fills and fillets.

Figure 7. Steel rule.

3.2.2 Hook rule. The hook rule (see fig. 8) is a standard rule with a fixed shoulder attached to one end. This rule facilitates accurate measurements from an end surface on a part. It is especially useful in positions where the end of the rule is hidden or out of reach and the scale graduations cannot be accurately alined with the edge of the part. It is frequently used for setting inside calipers and dividers.

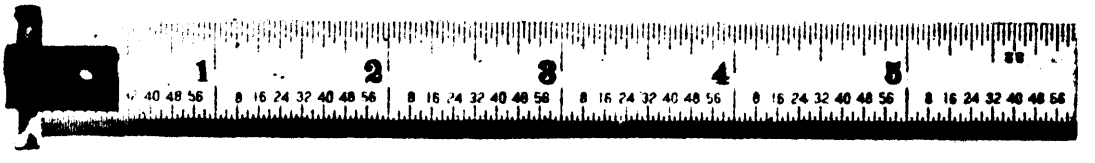

Figure 8. Hook rule.

3.2.3 Steel rule with holder. The steel rule with holder (see fig. 9) consists of a set of special short rules and a holder which is slotted at one end to allow insertion of the rules. Usually there is a set of five rules of varying length (¼ to 1 inch) with each holder. The rules are graduated on both sides.

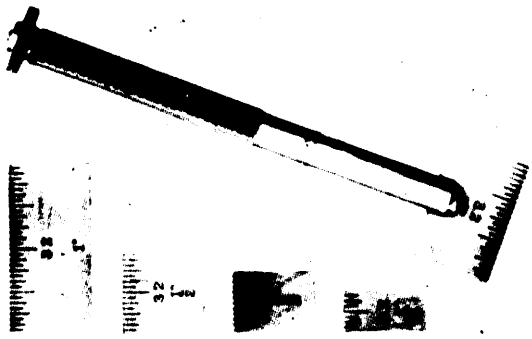

Figure 9. Steel rule with holder.

in sets of various widths, lengths, and configurations.

3.2.6 Combination set and combination square. The combination set consists of a heavy graduated blade, a square, a center head, and a protractor (see fig. 12). The combination square is the same as the combination set but without the protractor. The combination set is practically a universal measuring instrument for nonprecision line measurement and layout. The square of the combination can be moved along the blade and clamped in any

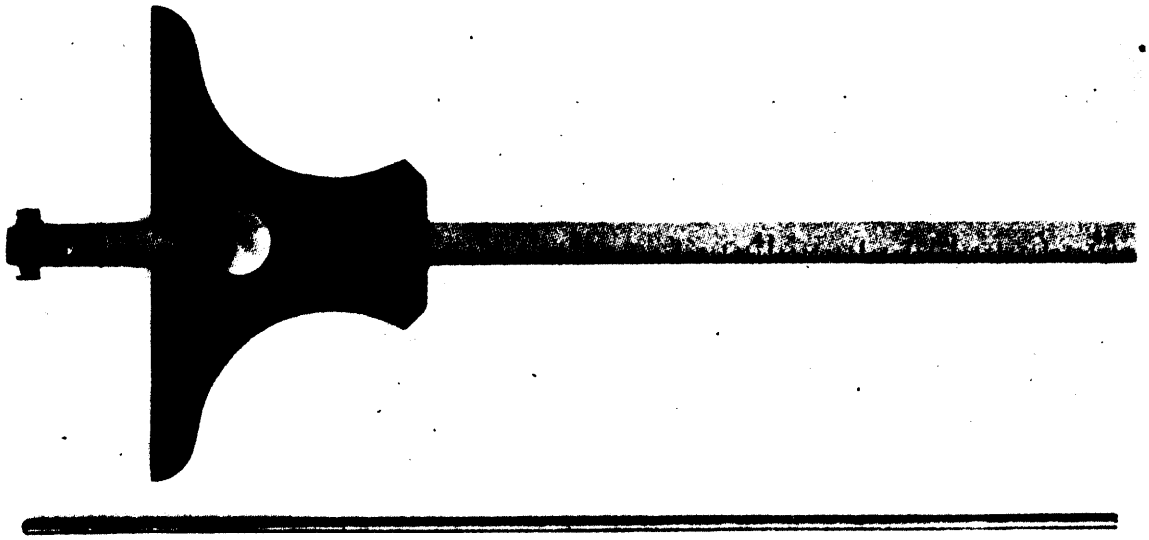

Figure 10. Rule depth gage.

3.2.4 Rule depth gage. The rule depth gage (see. fig. 10) is an ordinary rule equipped with a sliding shoulder or head so that it can be used to check the depth of holes or slots. The rule may be in the form of a rod. A modification of the rule depth gage has the rule equipped with a fixed shoulder to facilitate the measurement of holes which extend completely through a piece.

3.2.5 Adjustable steel square. The adjustable steel square (see fig. 11) is a type of beam square, having a sliding blade instead of a fixed blade. The blade fits into a groove in the base of the beam and can be locked in place by a thumb screw in the head of the beam. Blades for the adjustable square usually come position by means of a set screw. When it is clamped in position, one side of the square makes a 90 degree angle with the blade and the other side makes a 45 degree angle. It usually

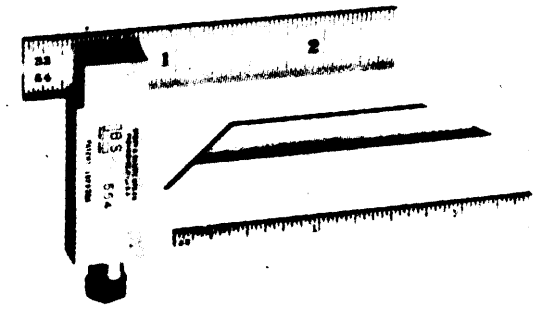

Figure 11. Adjustable steel square.

incorporates a spirit level set at right angles to the blade. The center head forms a center square when clamped to the steel rule. It has two flat measuring surfaces intersecting at 90 degrees. One of these surfaces is slotted so that when the head is placed on the blade, the blade bisects the angle of the head. The protractor of the combination set is provided with a swivel or turret to which the steel rule clamps. The revolving turret is graduated from O to 90 degrees in either direction. The protractor head may be either single with the shoulder extending from only one side of the blade, or double with the shoulder extending from both sides. Most protractor heads are equipped with a spirit level. Note: The type of protractor shown in figure 12 is called a plain protractor by some tool makers, and a bevel protractor by others. The terms plain protractor and reversible protractor are also used in connection with this instrument to denote single and double type heads. This tool should not be confused with the vernier type protractor which is a precision measuring instrument.

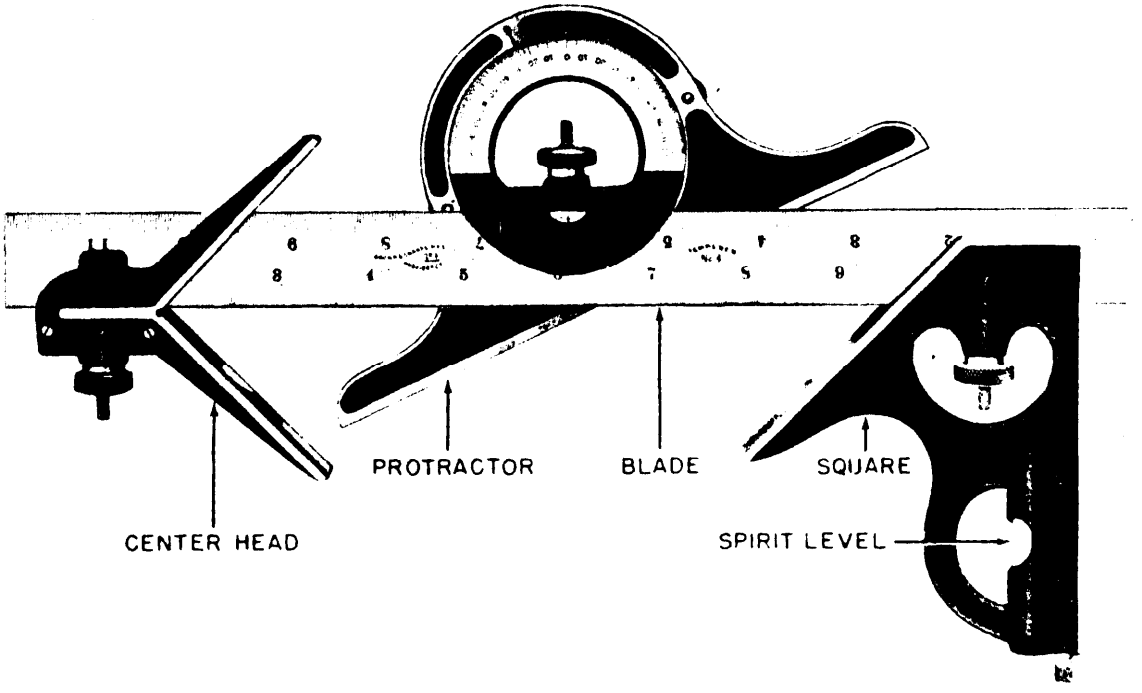

Figure 12. Combination set.

4

PRECISION MEASURING EQUIPMENT

4.1 GENERAL. Precision measurement is a process of accurately deriving the numerical value or size of a physical dimension in standard units of measurement such as inches, centimeters, degrees, minutes and seconds, by comparing the dimension with a precision standard of length or angle. This section describes various commercially available precision measuring equipment and the length or angle standards with which they are associated. Such tools and standards are used primarily for the measurement of gages, but they are also used, to a considerable extent, in the inspection of manufactured parts.

4.2 LENGTH STANDARDS

4.2.1 Line-graduated standards. Line-graduated standards used in gage inspection commonly have the form of accurately ruled scales and dials embodied in various types of precision measuring instruments.

4.2.2 Precision gage blocks. Precision gage blocks (see fig. 13) are square or rectangular pieces of hardened alloy steel or sintered carbide, having lapped, flat and parallel measuring surfaces on opposite ends. This permits combining them, by wringing, to produce any desired size. They are usually measured by comparison with standard blocks, which have been calibrated and certified by the National Bureau of Standards, using comparator readings in millionths of an inch. original or absolute measurements of gage blocks are derived by comparison with standard wave lengths of light by means of an interferometer. Gage blocks are most commonly used as length standards in gage inspection and are usually supplied in sets varying from 28 to 103 blocks of different lengths. The most generally used set of the inch system has 81 blocks with possibly two additional carbide wear blocks. Gage blocks are made in several degrees of accuracy, of which the most generally used is ± 0.000004 inch and designated as "A" quality The highest or laboratory grade, designated as "AA," has a guaranteed accuracy of ± 0.000002 inch for all blocks up to 1 inch in length and ± 0.000002 inch per inch of length for larger blocks. Other lower grades are also available. Variations in the lengths of blocks have a random distribution between plus and minus. The total error in a block combination, therefore, seldom exceeds twice the error in a single block, and often is actually less than that of a single block. If the error were permitted to be in one direction only, the accumulated error in a combination might be considerable. Although precision gage blocks are most widely used as masters for checking other gages, their use in the shop for setting of tools and in layout work is increasing. Chromium plated and carbide blocks are used where blocks are subject to considerable wear.

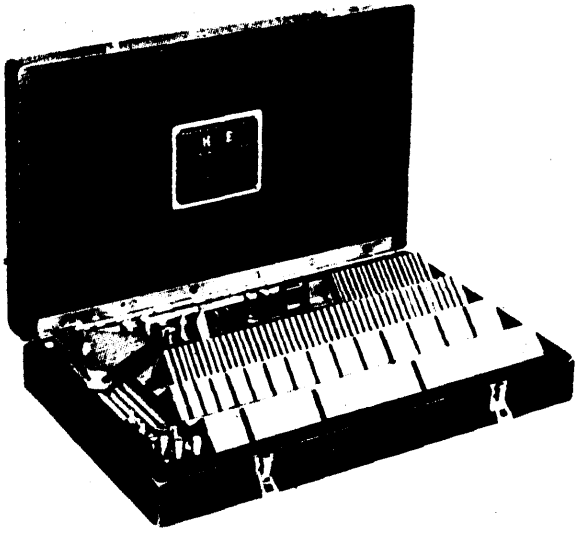

Figure 13. Precision gage block set.

4.2.3 End measuring rods. End measuring rods normally are made of tool steel, hardened on the ends, drawn and seasoned, and sometimes tipped with a suitable wear-re-

sisting material. They are commercially available in lengths from 1 to 23 inches and are suitable as standards for measurements to ±0.0001 inch. They are cylindrical in shape and have either flat and parallel end surfaces or spherical end surfaces of radius equal to or slightly less than one-half the length of the rod. The body is equipped with suitable insulating grips to permit handling the rod with minimum heat absorption.

4.2.4 Master disks. Master disks are customarily made of tool steel in a range of sizes from 0.105 to and including 8.010 inches in diameter, and are accurate within ± 0.00001 inch per inch of diameter. They are given the same hardening, seasoning, and lapping process as that for precision gage blocks, and are used as standards for comparators, supermicrometers, and similar instruments. (See 5.1.6 and fig. 31.)

4.2.5 Wires and rolls. Wires and rolls of hardened steel or sintered carbide are used between measuring contracts and the work when a dimension on the work to be measured is not directly accessible to flat measuring contacts. They are used, for example, for measuring the pitch diameter of thread plug gages, or for measuring a dimension at a designated point on a sloping surface. They are available in binary fractional inch sizes and in certain decimal inch sizes suitable for the measurement of screw threads and gears. Thread wires are furnished in sets of three wires of a given diameter; gear wire sets contain two wires; the diameters of these wires being the "best size" for a given pitch (see fig. 14). They are required to be within 0.0001 inch of the nominal sizes and the wires of a set must be equal in size, round, and straight within 0.00002 inch.

4.2.6 Solid angle standards and precision squares. Solid angle standards have a variety of forms such as angle gage blocks, universal angle gages, graduated cone points, and precision squares. Angle gage blocks function in the same manner as gage blocks for length measurements, and may be combined by wringing. Blocks may be assembled to serve as the complement of the angle being gaged. Thus, a set of 14 or 16 blocks suffices to form any angle to 1 second of arc from 1 second to 360 degrees. Cone points consist of hardened steel, short, cylindrical rods, each having a coaxial conical point at one end. A set of such points in increments of 5 minutes is particularly useful in the measurement of flank angles of large thread gages. The cylindrical square (see fig. 15) is a master square against which squares used in inspection are checked.

Figure 14. Gear and thread measuring wires.

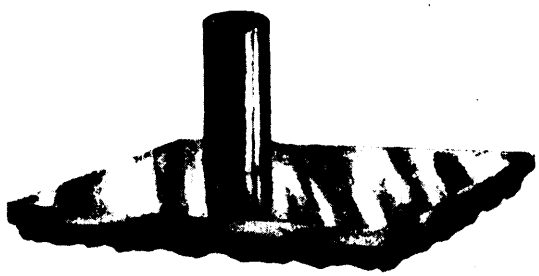

Figure 15. Cylindrical square.

It is an alloy steel cylinder, ground and lapped to be an accurately true cylinder and to have the end planes at 90 degrees to the longitudinal axis. Either end of the cylinder may be used as the base. The end surfaces are in relief so

that the base plane consists of a narrow peripheral notched ring so dust particles can be worked out by rotating the square when resting it on a flat surface.

4.3 SCALE AND VERNIER. Precision measuring equipment which embody line-graduated standards, scales, or graduated circles, equipped with verniers for subdividing scale divisions, are grouped into the following types:

4.3.1 Vernier caliper. The vernier caliper (see fig. 16) consists of a solid L-shaped frame and a sliding jaw which can be moved along the long arms of the L-shaped frame. The sliding jaw is in two sections joined by a horizontal screw. The larger section carries the measuring jaw and vernier scale; the smaller section or binding clasp has an adjusting nut acting on the horizontal screw. Both sections can be clamped independently to the long arm of the L-shaped frame. Thus the sliding jaw can be moved into an approximate position, the clasp clamped, and the larger section and measuring jaw moved to the exact position by movement of the adjusting nut. The blade of the solid L-shaped frame usually is graduated on both sides, one side for outside measurements and the other for inside measurements. Some calipers have only one scale, and it is necessary to add the width of the gaging jaws to the reading when an inside measurement is taken. The main scale is divided into 1.0-, 0.1-, and 0.025-inch intervals, but only the 1.0 and 0.1 intervals are numbered. The vernier scale has 25 divisions. A point is placed on the sliding head and another one of the frames so that dividers can be set to transfer distances. For some applications the vernier caliper has definite advantages over the micrometer caliper (see 4.4. 1) because of its wide range and because it can be used for measuring both inside and outside dimensions. It does not, however, have the accuracy of a micrometer caliper. A vernier caliper should show any l-inch interval of length within an accuracy of ±0.001 inch. In any 12 inches its accuracy should be within ±0.002 inch, and the error should not increase by more than about ±0.001 inch for every 12 inches thereafter.

4.3.1.1 Directions for reading the vernier caliper. The vernier scale is a short auxiliary scale which either slides along the main scale or is stationary while the main scale moves. It allows readings to be made between the graduations on the main scale. The principle of the vernier is applied to many types of measuring instruments. A vernier exhibits an ordinarily imperceptible difference in length or movement. The vernier scale usually has one or more graduations in the same length as the main scale. If the whole vernier scale contains one more

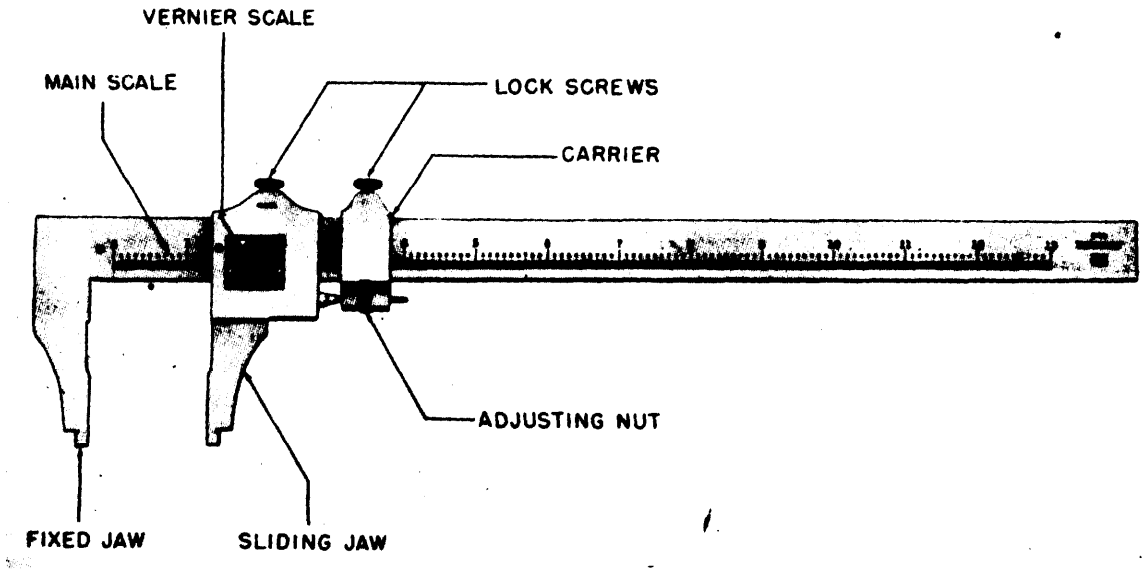

Figure 16. Vernier caliper.

division that the main scale over an equal length, each division on the vernier scale is proportionally smaller than a corresponding division on the main scale. On figure 17, the 25 divisions on the vernier are equal to 24 divisions on the main scale; therefore, each division on the vernier scale is $\frac{1}{25}$ of a division smaller than a division on the main scale. Since each main scale division is equal to $\frac{1}{40}$ or 0.025 inch and each vernier scale division is $\frac{1}{25}$ smaller than a main scale division, each vernier scale division is equal to $\frac{1}{25}$ of 0.025 or 0.001 inch. Reading across the vernier scale from zero, 0.001 inch is added to the reading obtained from the main scale just to the left of the zero on the vernier scale for each vernier scale division, as follows: The vernier scale with the zero line directly in line with a graduation on the main scale is shown by "A" on figure 17. In this case the vernier scale is not necessary as there is no fractional part of a division to determine. The reading is 2.350. The vernier scale with the zero line beyond the 2.35 division on the main scale indicates that the dimension is 2.35 plus a part of a main scale division, as shown by "B" on figure 17. In order to determine how many thousandths are to be added to the 2.35 reading, it is necessary to find the division on the vernier scale that exactly coincides with a division on the main scale, in this case the 18th, so that the total reading is 2.350 plus 0.018=2.368.

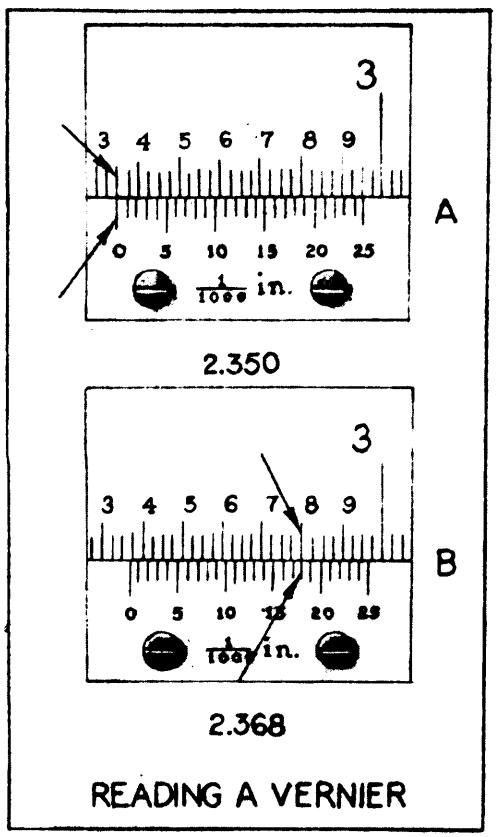

Figure 17. Vernier scale.

4.3.2 Vernier depth gage. The vernier depth gage (see fig. 18) consists of a blade having the main scale and a shoulder which slides on the blade and contains the vernier scale. The vernier depth gage is almost as accurate as the micrometer depth gage, and a wide range of depth can be measured without changing rods.

4.3.3 Vernier height gage. The vernier height gage (see fig. 19) is a caliper with a special foot block which adapts it for use on a surface plate. The mechanism of the movable jaw and the reading of the vernier scale are identical with those of the vernier caliper. The most commonly used vernier height gages measure 10,18, 24, or 40 inches above a surface plate. The 10-inch size is sometimes furnished with two scales, one for use as a height gage and the other for use as an outside vernier caliper.

4.3.4 Gear tooth vernier caliper. The gear tooth vernier caliper (see fig. 20) is a special form of caliper having two scales at right angles to each other. By the use of verniers, the scales can be read in thousandths of an inch. The horizontal scale is for measuring the thickness of a tooth at the pitch line, or chordal thickness by the setting of the jaws. The vertical scale is for measuring the distance from the top of the tooth to the chord at the pitch line by means of a tongue which moves up and down behind the jaws. When correctly set, this tongue keeps the jaws in the right position to measure the thickness of the tooth at the pitch circle. The gear tooth vernier caliper is made commercially in two sizes: 20 to 2 diametral pitch and 10 to 1 diametral pitch. Although widely used, the gear tooth vernier caliper has certain disadvantages, of which the most undesirable is the measurement

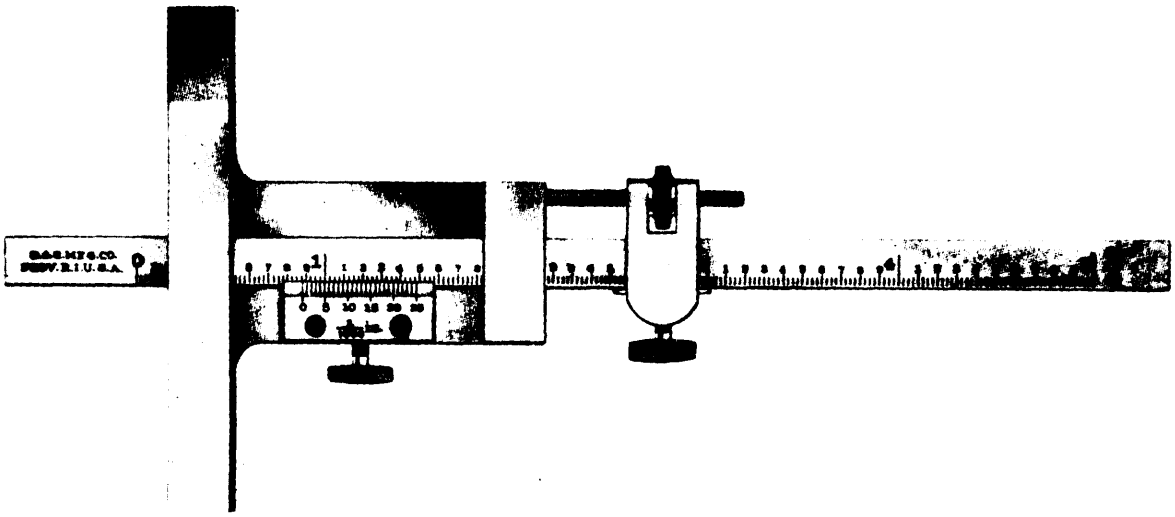

Figure 18. Vernier depth gage.

taken by the corners of the jaws, causing rapid wear of the tool.

4.3.5 Vernier bevel protractor. The vernier bevel protractor (see fig. 21) also called a universal bevel protractor, is an angle measuring instrument designed for the layout and checking of angles to an accuracy greater than 1 degree. It consists of two members, a base and a blade, which can be set in any angular relationship to each other. The position of one member relative to the other is indicated on a circular dial which has four O- to 90-degree scales. By means of a vernier, the scale can be read to the nearest 5 minutes or $1/12$ degree. The blade is adjustable and, by means of a clamping mechanism and thumb nut, can be locked to the central connecting arm at any position along its axis. The ends of the blades are usually beveled to allow the protractor to be used in measuring from square to undercut shoulders where a square end blade would not enter. The blade assembly (blade and central arm) is locked to the scale and base by a large central locking nut. Either a separate or integral means of fine adjustment is usually provided to allow controlled final movement of the blade through a small arc. The instrument shown in figure 21 has an adjustable arm or acute angle blade for the purpose of measuring small angles on pieces so shaped that they would be difficult to measure from the fixed base. The back of the vernier bevel protractor is flat so that the tool may be placed flat on a surface plate or on the work being checked.

4.3.6 Directions for reading the vernier protractor. The vernier indicates every 5 minutes or $1/12$ degree. When the zero on the vernier exactly coincides with a graduation on the scale, the reading is in exact degrees, as in the upper scale shown on figure 22, in which the reading is 17 degrees O minutes. When the zero graduation of the vernier does not coincide exactly with a graduation on the scale, the number of $1/12$ degree or 5 minute intervals to be added to the whole degree reading is determined by counting the number of divisions from the zero of the vernier to the first line on the vernier that coincides with a line on the scale. As each division on the vernier represents 5 minutes, the number of these divisions multiplied by 5 will be the number to be added to the whole number of degrees. For example, the lower scale shown on figure 22 shows the zero on the vernier between 12 and 13 on the scale. The zero on the vernier has, therefore, moved 12 whole degrees to the right from zero on the scale. In the same direction, the tenth line of the vernier, representing 50 minutes is the line which exactly coincides with a line on the scale. The reading, then, is 12 degrees 50

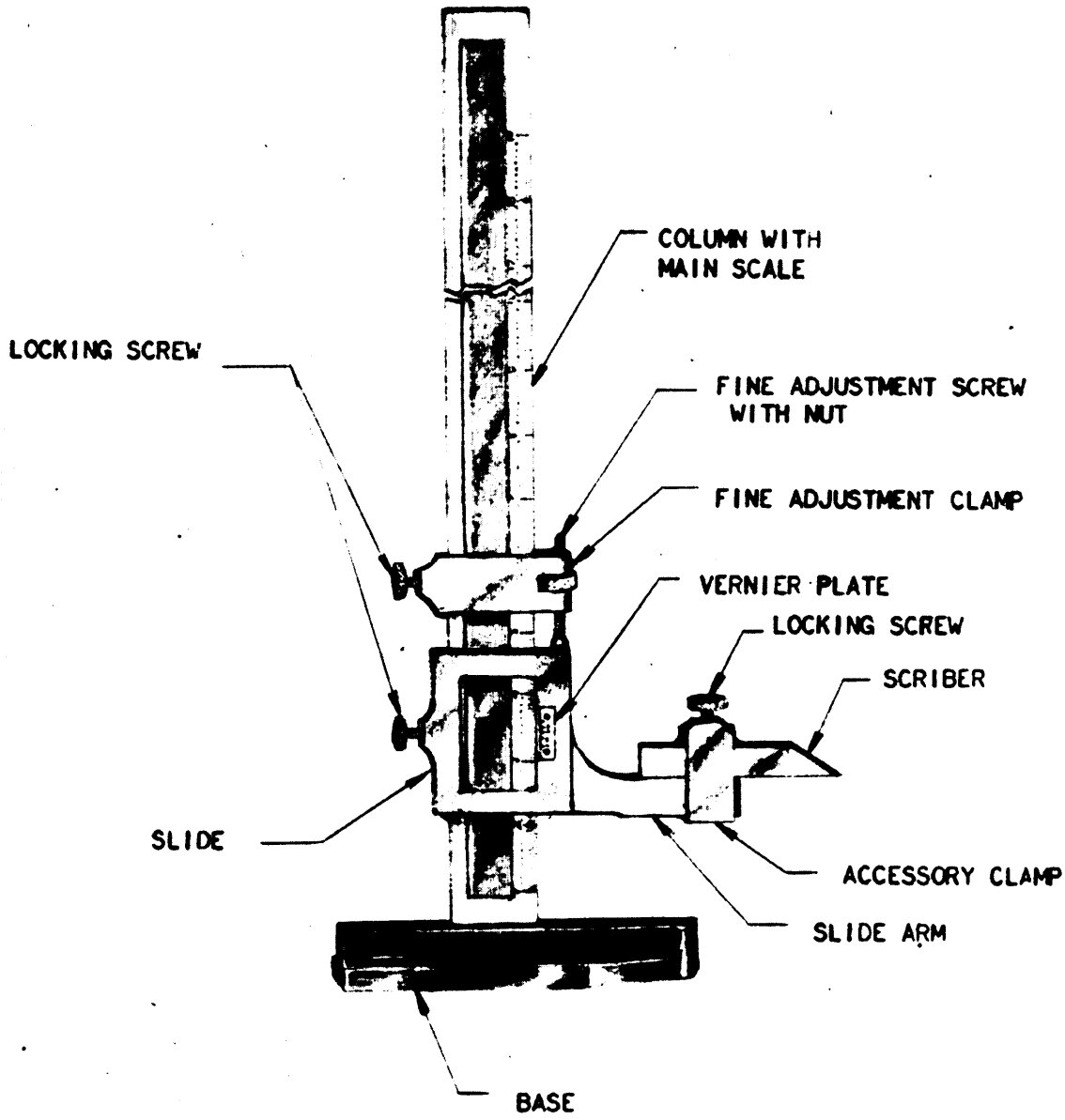

Figure 19. Vernier height gage.

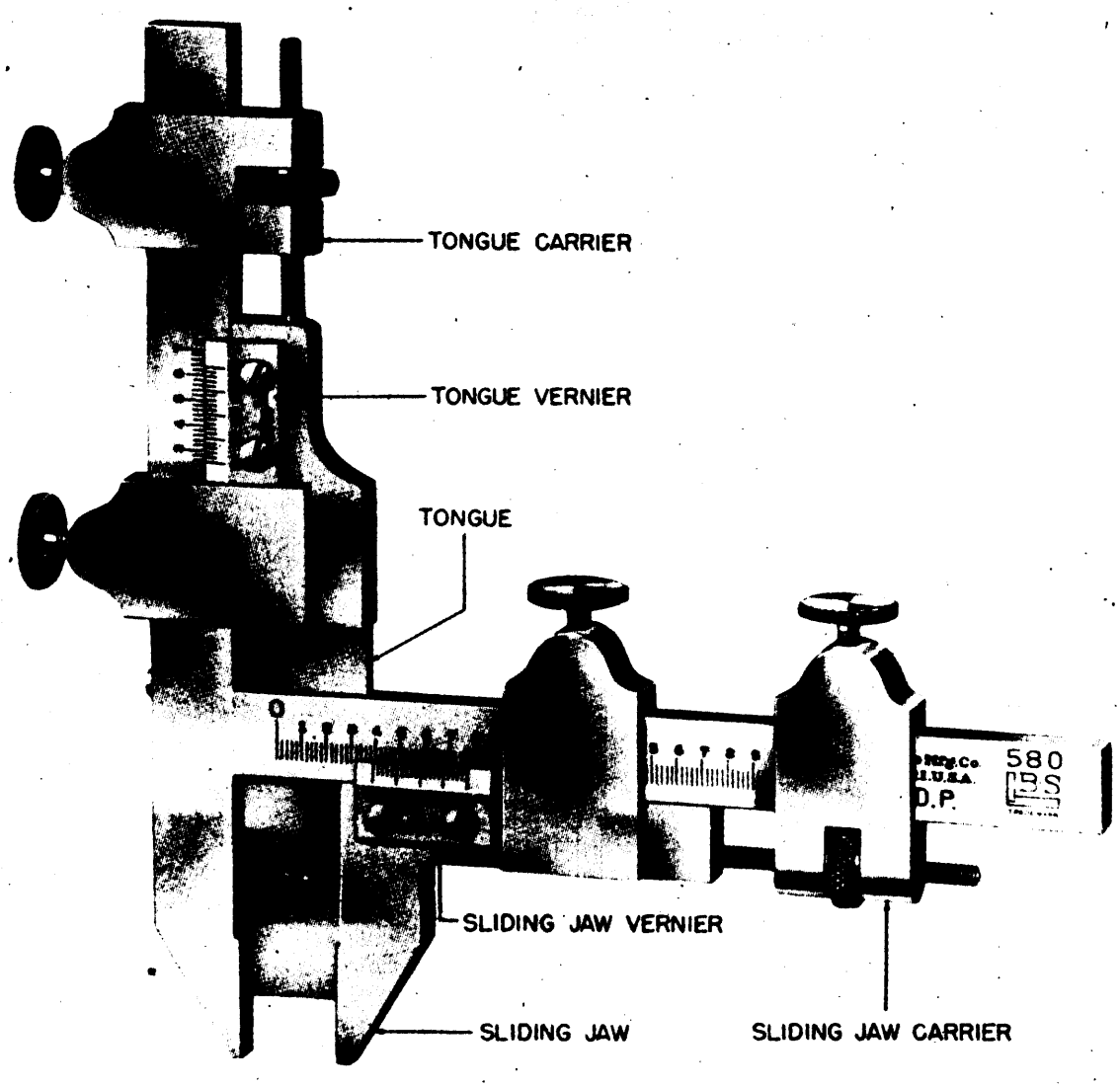

Figure 20. Gear tooth vernier caliper.

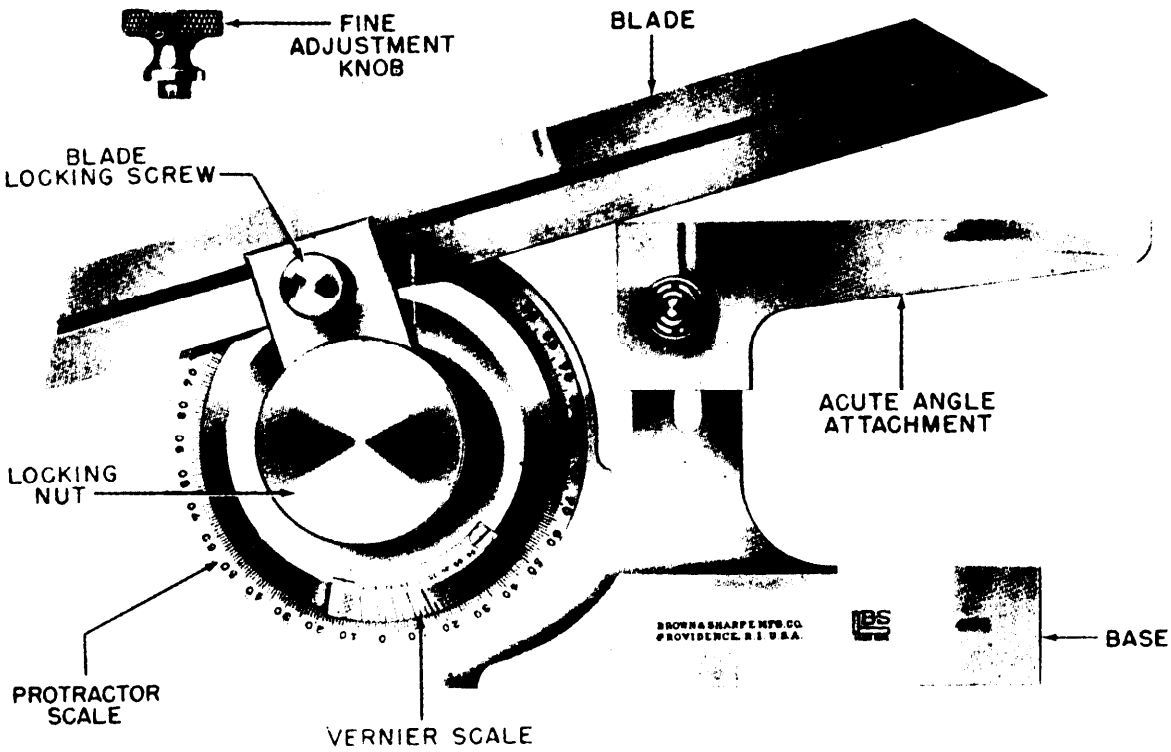

Figure 21. Vernier bevel protractor.

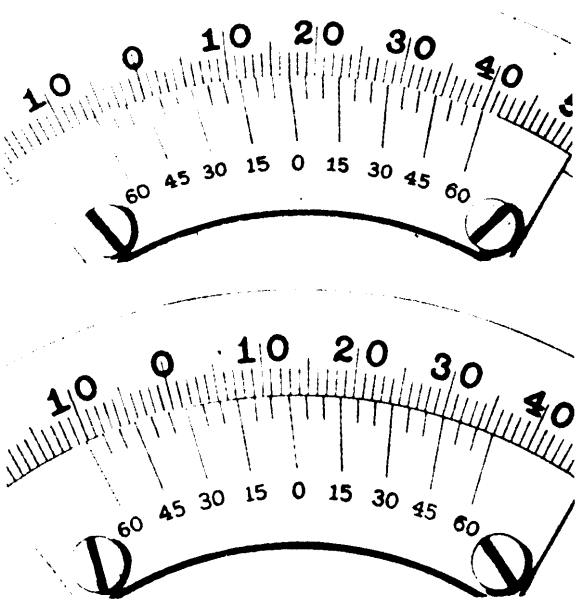

Figure 22. Vernier on bevel protractor.

minutes. Since the divisions, both on the scale and on the vernier, are numbered both to right and left from zero, any size of angle can be measured. The readings on the scale and on the vernier are taken either to the right or left, according to the direction in which the zero on the vernier is moved.

4.4 MICROMETERS

4.4.1 Micrometer caliper. The micrometer caliper (usually called a micrometer or "mike") is second only to the steel rule in the extent of its use by an inspector. It utilizes the relationship between the axial and circular motions of a screw as a means of precision measurement. The micrometer caliper consists essentially of a U-shaped frame and a screw (see fig. 23). One end of the U-shape holds the anvil, which is a hardened steel button pressed or screwed into the frame, and the other end of the U-shape carries the hollow steel barrel in which the screw turns. The threads of the screw engage

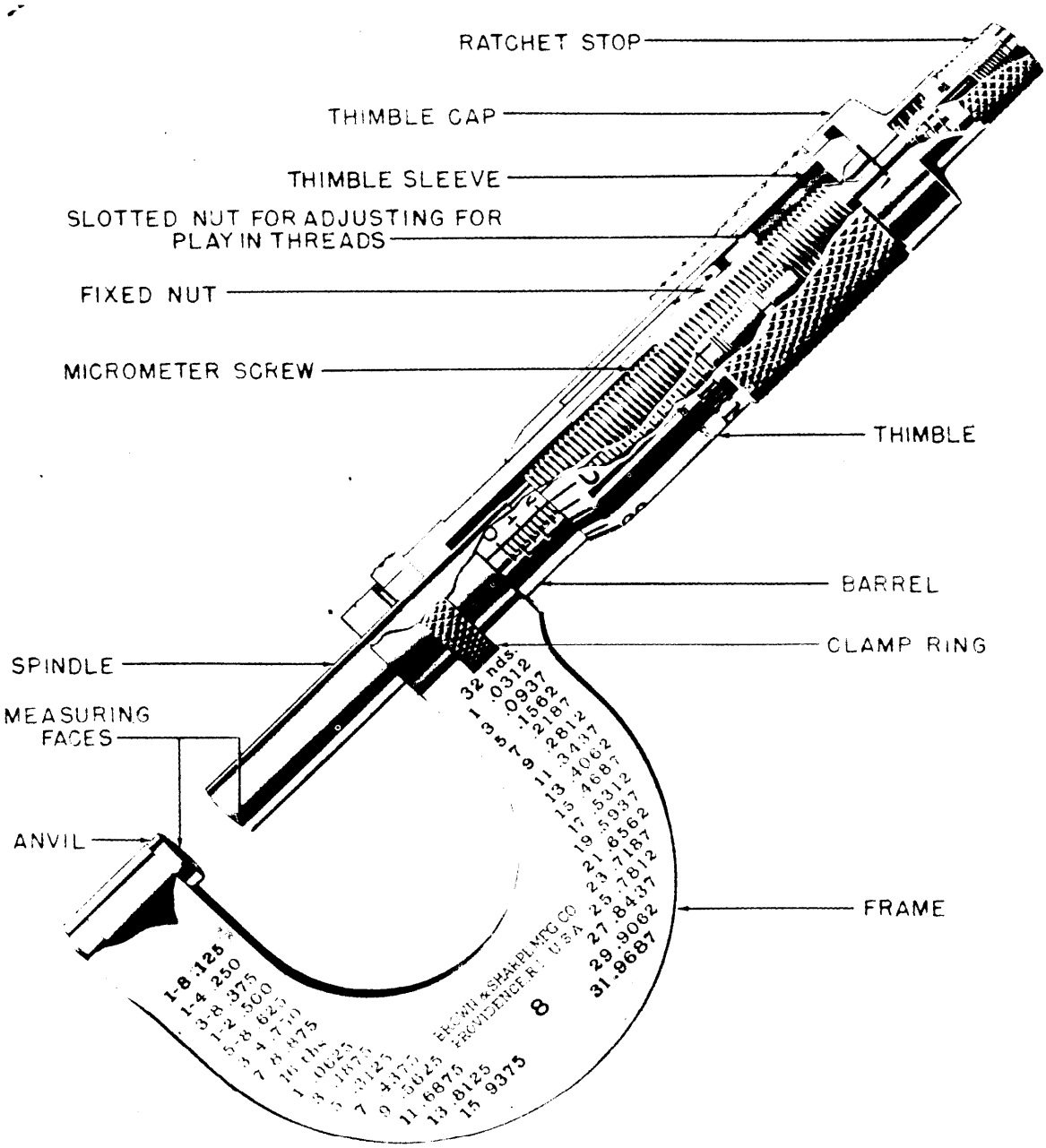

Figure 23. Micrometer caliper.

the threads of a nut supported in the outer end of the barrel. The inner end of the screw is unthreaded and constitutes the spindle which provides the second and movable reference surface. The spindle rides in a plain bearing which is part of the frame. The thimble, which is attached to the screw, is a graduated, hollow sleeve fitting over the barrel. The thimble is fixed in relation to the circular position of the screw and carries graduations on its front by means of which the amount of rotation of the screw is determined in relation to a longitudilnal reference line on the barrel. The reference line on the barrel is the base of the

micrometer scale which shows the axial movement of the screw. The thimble graduations, therefore, subdivide the relatively larger divisions of the barrel scale. Some micrometer calipers have a ratchet on the top of the thimble cap connected to the thimble and screw through an over-riding clutch held together by a spring. The diameter of the nut which engages the screw can be adjusted to compensate for wear by tightening the ring nut. Some micrometer calipers have a clamp ring or lock nut set in the U-shaped frame at the spindle bearing. This device acts as a caroming roll, which operates against a split nut to bind the spindle bearing. Turning the clamping ring until it is just tight effectively locks the spindle in position. The most common size micrometer caliper measures from 0 to 1 inch. The larger size micrometer calipers also measure within a range of 1 inch. Thus, for example, 1 inch must be added to the barrel reading of a 2-inch micrometer caliper to give the correct distance between anvil and spindle. Most micrometer calipers are graduated to read to thousandths of an inch and may be read to ten-thousandths by estimating tenths of the thimble graduations. If they are equipped with a vernier scale, they can be read directly to a ten-thousandth of an inch. This is approximately the limit of accuracy which is built into an ordinary commercial micrometer.

4.4.1.1 Directions for reading a micrometer caliper. The distance between the anvil and the unthreaded part of the screw, called the spindle, is determined by the number of whole turns and fractions of a turn of the screw. The screw of a micrometer caliper reading in the inch system has 40 threads per inch, thus each revolution of the screw opens the micrometer caliper $1/40$ or 0.025 inch. The barrel is graduated to show the revolutions of the screw. There are 40 graduations on the barrel of a micrometer caliper having a range of 1 inch. To simplify the reading, every fourth graduation representing tenths of an inch, is numbered. The thimble is graduated so that each $1/25$ of a turn, ($1/25$ of $1/40$ or 0.001 inch) is indicated by one graduation on the thimble. The thimble thus has 25 graduations, every fifth graduation being numbered for convenience in reading as shown on figure 24. A measurement in thousandths on the micrometer caliper is to be read as follows:

a. Note the number of graduations on the barrel uncovered by the thimble travel and multiply this number by 0.025.

b. Note the thimble graduation which coincides most closely with the reference line on the barrel.

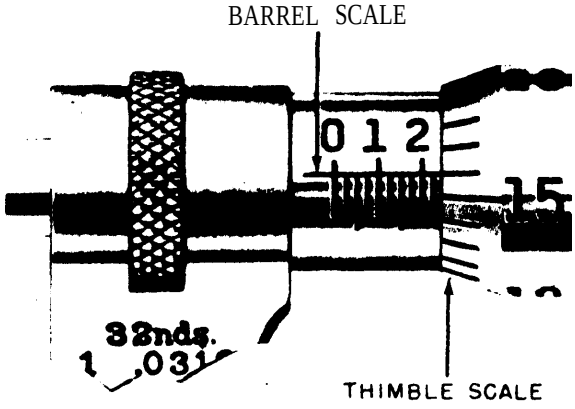

Figure 24. Micrometer barrel and thimble scales.

c. Add this reading in thousandths of an inch to the barrel reading. This method is applied to the example shown on figure 24, as follows :

	Inch
9 graduations on the barrel x 0.025 inch	=0.225
16 graduations on thimble x 0.001	=0.016
Total reading	=0.241

As an alternative, use the numbers on the barrel:

2 (highest figure visible on barrel) x 0.100 inch	=0.200
1 (additional graduation beyond 2) x 0.025 inch	= .025
16 graduations on the thimble x 0.001 inch	= .016
Total reading	=0.241

Take care in reading a micrometer caliper when the thimble is approaching the completion of a revolution. If the thimble zero has not passed the index line on the barrel, do not read the

barrel for an extra 0.025 inch. The next graduation may begin to show but has not actually become a portion of the barrel reading. That portion of the graduation that starts to show near the end of the revolution is accounted for as the thimble reading. The accuracy of measurements made with the micrometer depends on the contact load (or in common parlance, measuring pressure) used. It is necessary to develop a sense of "feel" in adjusting the micrometer to the work. This can best be done by taking measurements of precision gage blocks or other accurately known standards. Also, a sensitive feel is best developed by grasping the smooth portion of the thimble rather than the knurled portion.

4.4.1.2 Directions for reading the vernier micrometer caliper. The vernier micrometer caliper is a standard micrometer equipped with a vernier scale. The vernier micrometer scale (see fig. 25) is etched on the barrel in line with and contiguous to the thimble scale. It consists of 11 equally spaced lines, the first 10 lines numbered from O to 9, the last graduation marked with a second O. The 10 divisions of the vernier scale occupy the same space as 9 divisions on the thimble. One vernier division therefore is $\frac{1}{10} \times \frac{9}{1000} = \frac{9}{10000}$ inch. The difference between the thimble and vernier division are $\frac{10}{10000}$ minus $\frac{9}{10000} = \frac{1}{10000}$, thus allowing a reading of $\frac{1}{10000}$ inch. Thus, when a thimble graduation does not coincide with the index line on the barrel, it is necessary only to determine which vernier graduation on the barrel coincides with a graduation on the thimble and to add that vernier graduation number in ten-thousands to the regular micrometer reading. The numbers on the coinciding graduation of the thimble scale are to be completely disregarded in the use of the vernier scale. Never use the number of a thimble scale graduation that coincides with a vernier graduation to obtain the vernier reading. Examples of micrometer vernier readings are shown on figure 26. In example A, the barrel reading is 0.45. The thimble reading lies between 0.019 and 0.020. The seventh graduation of the vernier scale coincides with a graduation of the thimble scale, showing that the exact. reading of the thimble scale is 0.0197. The micrometer reading for example A is, therefore, 0.4697. In example B, the barrel reading is 0.45. The thimble reading is exactly 0.019. This is verified by the fact that only the zero graduations of the vernier coincide with thimble scale graduations. The micrometer reading for example B is therefore 0.4690. The vernier scale does not enter into this reading except to confirm the apparent position of the thimble scale on the index line.

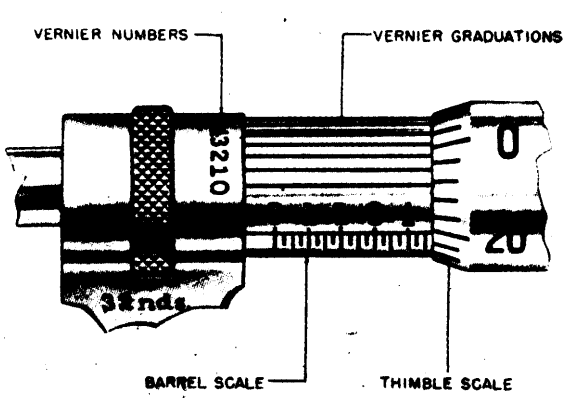

Figure 25. Vernier micrometer scales.

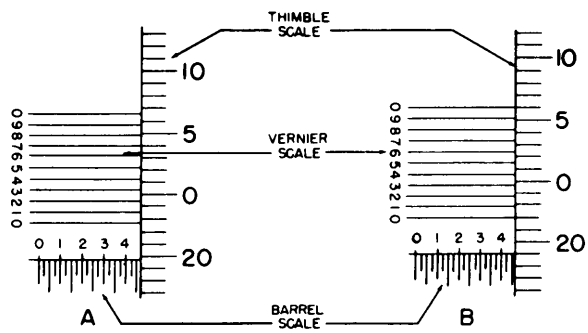

Figure 26. Examples of micrometer vernier readings.

4.4.2 Screw thread micrometer caliper. The screw thread micrometer caliper (see fig. 27) is a micrometer caliper adapted for measuring pitch diameters of threads. The spindle has a cone-shaped tip which is truncated so that it does not contact the root of the thread. The anvil is swiveled and has a truncated V-groove to fit a thread. The contacts occur at the sides of the thread. The point on the spindle could be used for any pitch but the V-shaped anvil is limited in its range. For this reason, six different micrometer calipers are necessary to cover

a range of 4½ to 64 threads per inch in a given diameter range. when the micrometer caliper is set to zero, the pitch lines ofthe spindle and anvil coincide. When open, the reading gives the pitch diameter. Thread micrometers are convenient to use but are subject to certain limitations. When the micrometer is set to read zero with the thimble and anvil together, as is usually done, the reading over the threads is always slightly distorted because, the thread surfaces being warped, contact of the anvil on the thread is not in the same axial plane which the spindle cone contacts. The readings are not distorted when thread micrometers are set to a standard thread plug gage of known pitch diameter and used for measuring threads of the same p0itch and diameter as the plug. When so set, however, the tool will not read exactly zero when spindle and anvil are brought together.

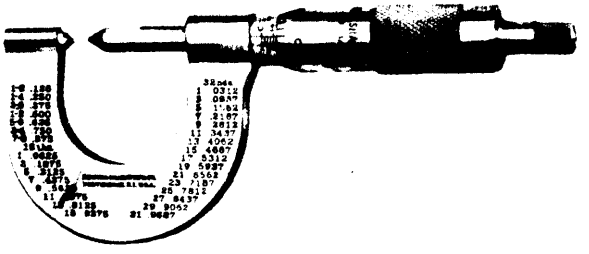

Figure 27. Screw thread micrometer caliper.

4.4.3 Inside micrometers. Inside micrometers are of two types, the caliper-type and the rod-type. Both types read in thousands of an inch.

4.4.3.1 Caliper type. The caliper type inside micrometer is designed for measuring small inside dimensions. It is made commercially in ranges of from 0.2 to 1 inch, ½ to 1½ inches and 1 to 2 inches. The minimum dimension is determined by the width of the measuring jaws. These are gound with a small radius to insure line contact in a hole. Some caliper-type inside micrometers have the barrel scale on the spindle, which does not turn (see fig. 28). They are read in the same way as an ordinary outside micrometer caliper. Others have the barrel scale on the barrel in the same position as on an outside micrometer caliper but the scale reads from the right to left instead of left to right.

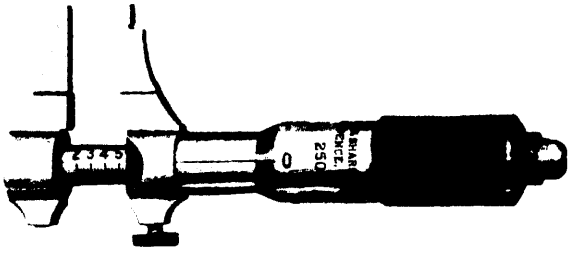

Figure 28. Inside micrometer, caliper-type.

4.4.3.2 Rod-type. The rod type inside micromer (see fig. 29) is used to measure inside dimensions larger than those covered by the caliper type inside micrometer. It consists of a micrometer head and a series of interchangeable extension rods of varying lengths. An especially short inside micrometer with a range of from 1 to 2 inches may be obtained, and by means of extension rods, a length up to 100 inches or more may be measured. The range of the micrometer screw itself is short. The smallest size micrometer has ¼ inch length of screw and the largest only a 1 inch length of screw. some sets contain a collar by which the inch steps between rods may be split up when the screw is ½ inch. The collar extends the length of any rod ½ inch.

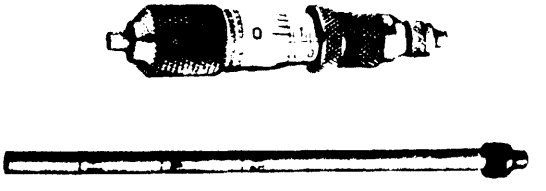

Figure 29. Inside micrometer, rod-type.

4.4.4 Micrometer depth gage. The micrometer depth gage (see fig. 30) consists of a flat shoe or shoulder attached to the barrel of a micrometer head. The base of the shoulder is hardened and ground in order to be at right angles to the axis of the spindle. The spindle, which protrudes from the shoulder, may be a flat strip or round rod and may be either graduated or ungraduated. The range of measurement of the type of gage shown on figure 30 can be increased by the use of interchangeable extension rods of different lengths.

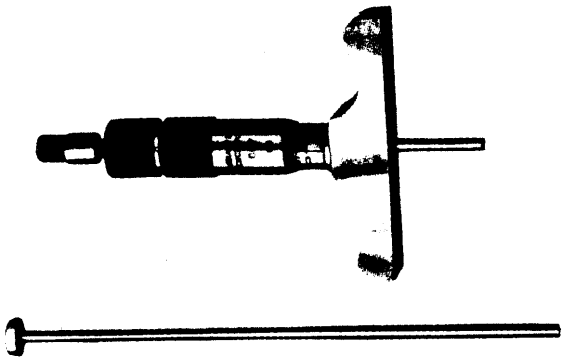

Figure 30. Micrometer depth gage.

These rods, however, are not interchangeable in different tools. By removal of the thimble cap, the desired rod may be inserted easily and quickly in the gage through a hole in the micrometer screw. When the thimble cap is replaced, it holds the rod firmly in position. The scale on the depth micrometer reads from right to left.

4.4.2 Supermicrometer. The supermicrometer (see fig. 31) is a bench-type micrometer with controlled contact load. It bridges the gap between the ordinary hand micrometer and the very accurate measuring machine. It reads in ten-thousandsof an inch and is accurate to a ten thousandth, whereas the ordinary vernier micrometer, although it can be read in ten-thousandths, will usually have errors of from 1 to 3 ten-thousandths inch. The supermicrometer consists of a heavy cylindrical bed on which is mounted a headstock containing the micrometer screw, and a tailstock containing both the mechanism for maintaining constant measuring load and the anvil. In the headstock, a large graduated drum divides the graduations of 0.05 inch on the spindle into 0.001 inch increments, this arrangement being

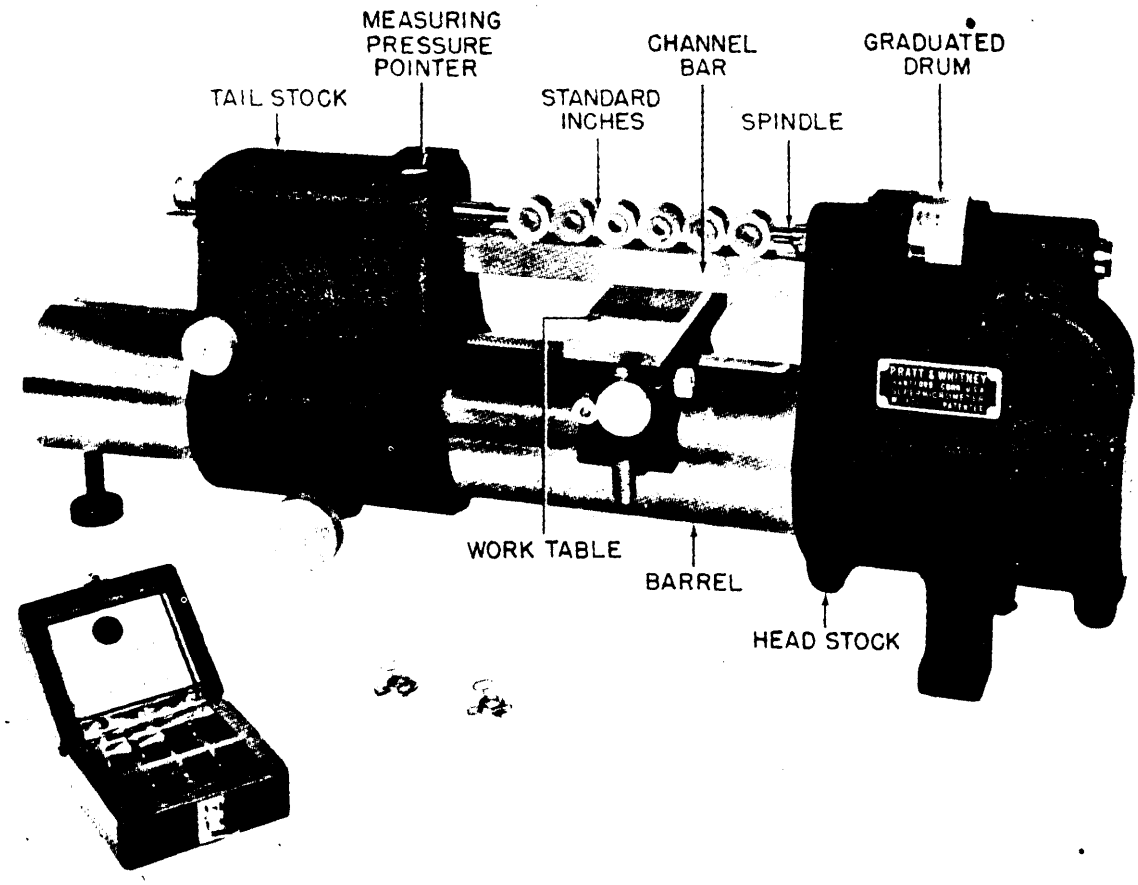

Figure 31. Supermicrometer.

similar to that found on micrometer calipers. Alongside the graduated drum is a vernier scale by which readings to 0.0001 inch can be made. The micrometer screw of the supermicrometer has a range of from 0 to 1 inch. but the instrument itself covers a range of 8 inches in 1-inch steps by the use of l-inch master disks as shown on figure 31. The tailstock can be moved to any position along the bed. The pressure mechanism can be adjusted by means of knurled knob for a contact load of 1 or 2½ pounds. These are the two loads recommended by the National Bureau of Standards for measuring threads by the three-wire method.

4.5 MEASURING MACHINES

4.5.1 Universal measuring machine. The universal measuring machine (see fig. 32) generally used in the United States is a bench type measuring machine consisting of a heavy base containing accurate ways upon which a micrometer headstock with microscope can be positioned in relation to a master bar graduated at each l-inch interval. A pressure tailstock, which is also adjustable on the ways, provides means of adjusting and controlling electrically the measuring load from 1 to 2½ pounds, in increments of 8 ounces. It is similar to the supermicrometer in appearance and operation, but the accuracy is greater as direct measurements can be taken to 0.00001-inch. The machine is furnished in various sizes having capacities from 0 to 12, 24, 26, 48, 80, or 120 inches. The master bar of this type of measuring machine is a line-graduated standard which runs the length of the machine at the rear. It is made of seasoned steel and bears microscopic reference lines on highly polished plugs. These graduations are placed 1 inch apart and are used for setting the measuring head at even inch positions. The measuring head includes a microscope, with a double cross-hair, to set on the inch graduations of the master bar. The pressure tailstock makes possible the duplication of exact measuring load at all times. Changes in load are made by turning the knob at the rear of the tailstock until the desired load is reached, as indicated on a graduated scale which is calibrated in 8-ounce divisions from 1 to 2½ pounds. A milliammeter,located. on the measuring head, shows when the correct measuring load has been reached. By advancing the anvil in the measuring head, the work is pressed against the tailstock anvil until

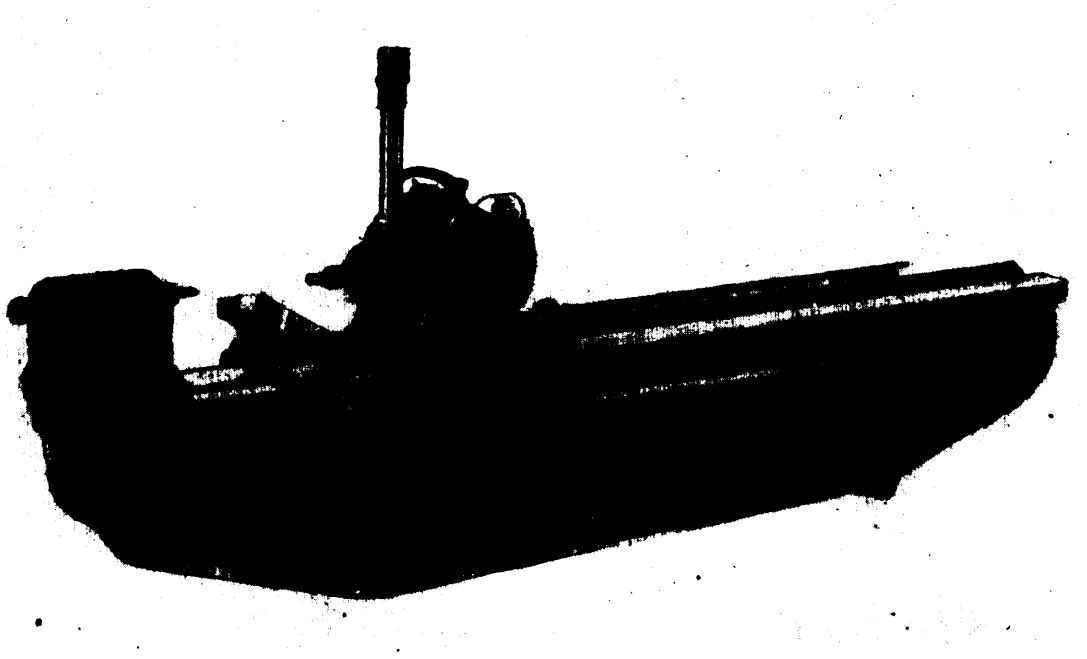

Figure 32. Universal measuring machine.

the pointer of the milliammeter reaches the center of the scale. The size is the sum of the number of the inch graduation of the master bar to which the microscope is set and the reading of the micrometer head.

4.5.2 Special measuring machines. Measuring machines of special design for specific purposes are available commercially. Among these are lead measuring machines for determining errors in pitch of screw thread gages and internal measuring machines for measuring the diameters of ring gages.

4.6 COMPARATORS. Comparators are used for determining dimensions by measuring the difference in length between a cent act length standard, such as a master disk or gage block combination, and the work.

4.6.1 Vertical comparators. Most comparators are of the vertical bench type, consisting of a ribbed cast iron base upon which is mounted an anvil for supporting the work and a vertical hollow steel shaft or column which supports the measuring head. The measuring head contains the measuring spindle and the

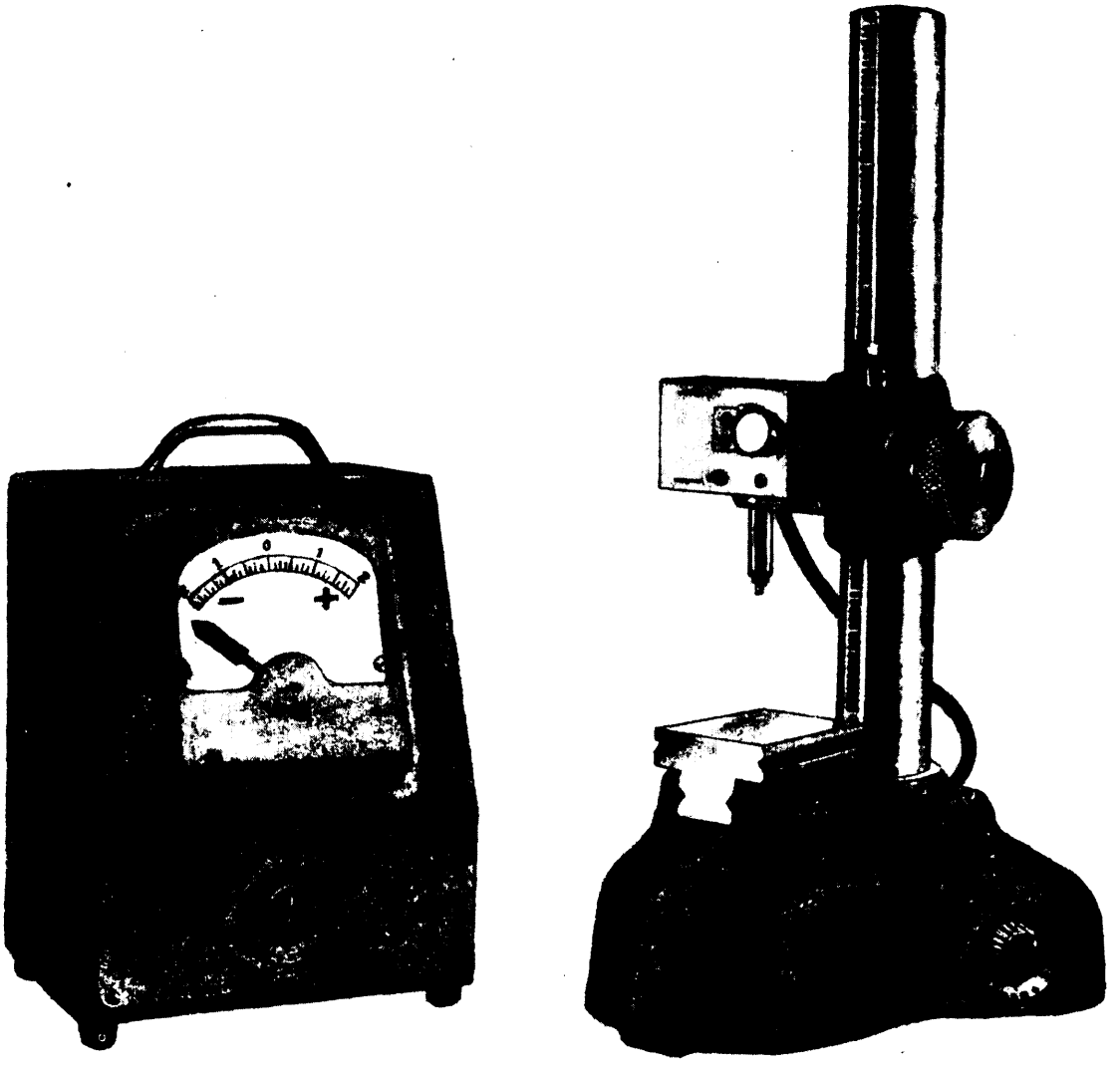

Figure 33. Electrolimit comparator.

amplifying mechanism. The column permits swiveling of the head and is equipped with a rapid traverse elevating mechanism for raising or lowering the measuring head. Measuring spindles may have a diamond or carbide tip which is either flat or hemispheric]. Anvils may be had in various sizes and shapes. with or without carbide inserts. Backstops are also available.

4.6.2 Electric comparators. In electric comparators, such as the "electrolimit" comparator (see fig. 33), amplification is obtained by means of a balanced induction bridge circuit which is unbalanced by displacement of the measuring spindle. The amount of current which is thus caused to flow through the bridge is proportional to the linear displacement of the spindle, and this amount is read by means of a meter which may be mounted on the measuring head or in a separate meter box. Magnifications available range from 750 to 22,500 times, the corresponding meter scale graduations being one division equals 0.0002 inch and one division equals 0.0000025 inch.

4.6.2.1 Visual gage. The visual gage (see fig. 34) employs a combination of mechanical and optical levers as the means of magnification, using electricity to produce a beam of light. Magnifications up to 20,000 times are available.

4.6.2.2. Dial comparator. The dial comparator (see fig. 35) is a type of vertical comparator in which the amplification is mechanial and the magnifying means is a dial indicator (see 4.8.2)

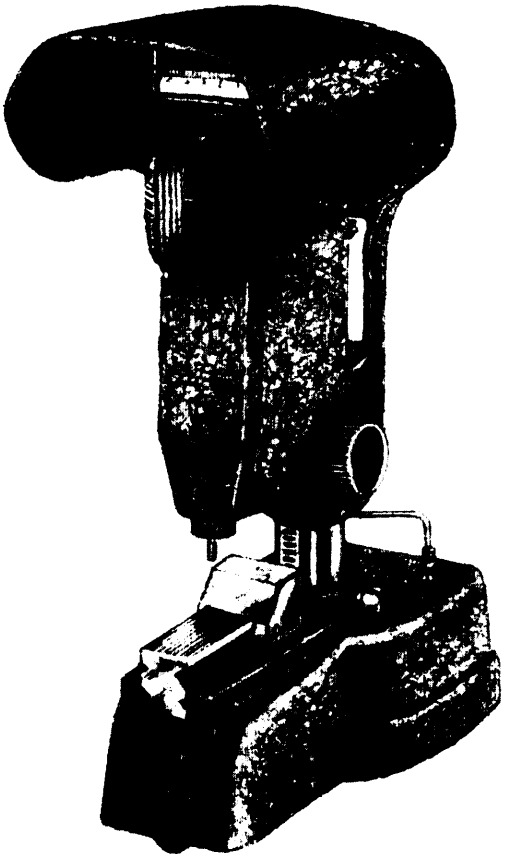

Figure 34. Visual gage.

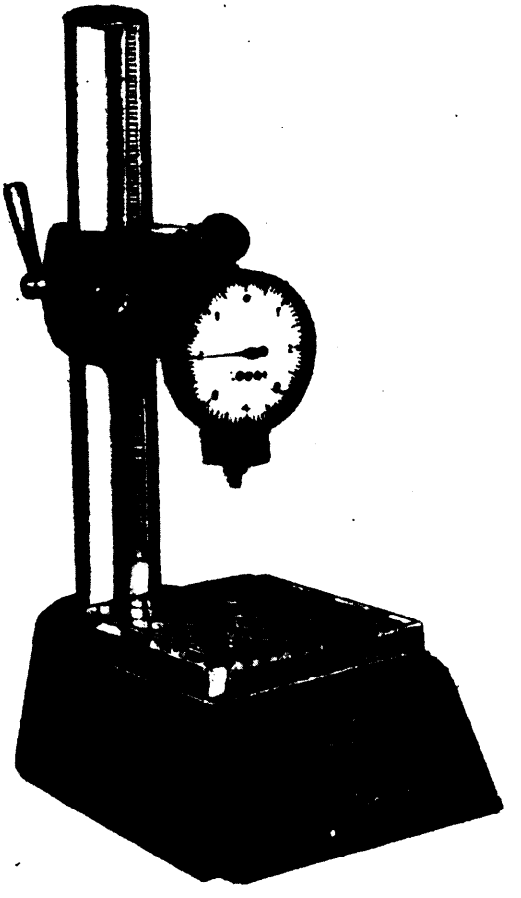

Figure 35. Dial comparator.

4.7 OPTICAL INSTRUMENTS AND COMPARATORS. For certain types of inspection. instruments and comparators based on optical principles are more advantageously applicable than mechanical means. such equipment includes optical flats, optical comparators, tool maker's microscopes, and optical dividing heads.

4.7.1 Optical flats. Optical flats (see fig. 36) are transparent disks of glass, quartz, or semiquartz. One side of the disk is an optically flat surface, being within 1 or 2 millionths inch of a true plane. Interference fringes, or light and dark bands, are produced when an optical flat is superimposed on another flat surface in such a way that there is a very small angle between the surfaces and the surfaces are suitably illuminated with approximately monochromatic light. The straightness of the fringes is a measure of the flatness of the surface being tested, one fringe corresponding approximately to 0.00001 inch in great light and 0.000012 inch in yellow light. In addition to checking flatness, optical flats can be used for comparing the length and parallelism of nominally equal precision gage blocks.

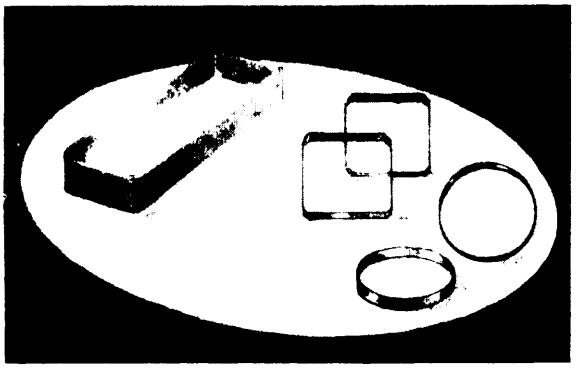

Figure 36. Optical flats.

4.7.2 Optical projection machines. The optical comparator (see fig. 37) and contour measuring projector (see fig. 38) are both optical projection machines for measuring or comparing objects by means of a magnified shadow image. A concentrated, parallel beam of light is projected across the object to be measured and by a system of optical magnification the contour of the part is projected onto a screen.

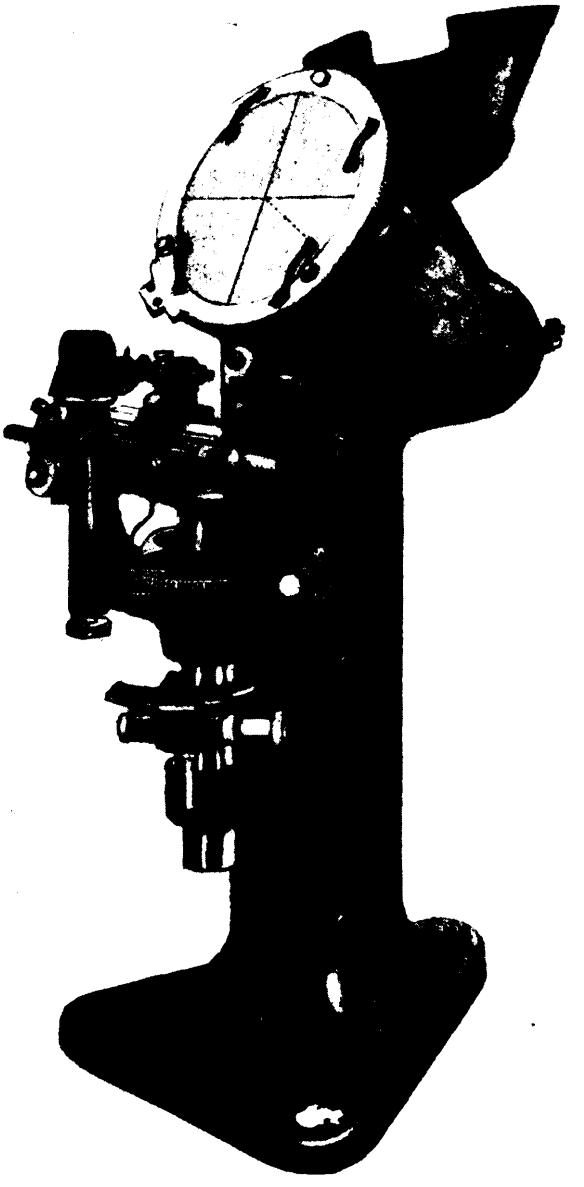

Figure 37. Optical comparator.

The shadow is compared with lines on a chart corresponding to the limits of size of the contour of the part being checked. The magnification of the comparator is the ratio of the size of the shadow on the screen to the size of the object. The magnification is dependent primarily upon the projection lens system and on the screen distance. Interchangeable lens systems are available, with magnifications of 10, 20, 25, 3l¼, 50, 62½, and 100 times. The protractor screen consists of a circular disk of finely

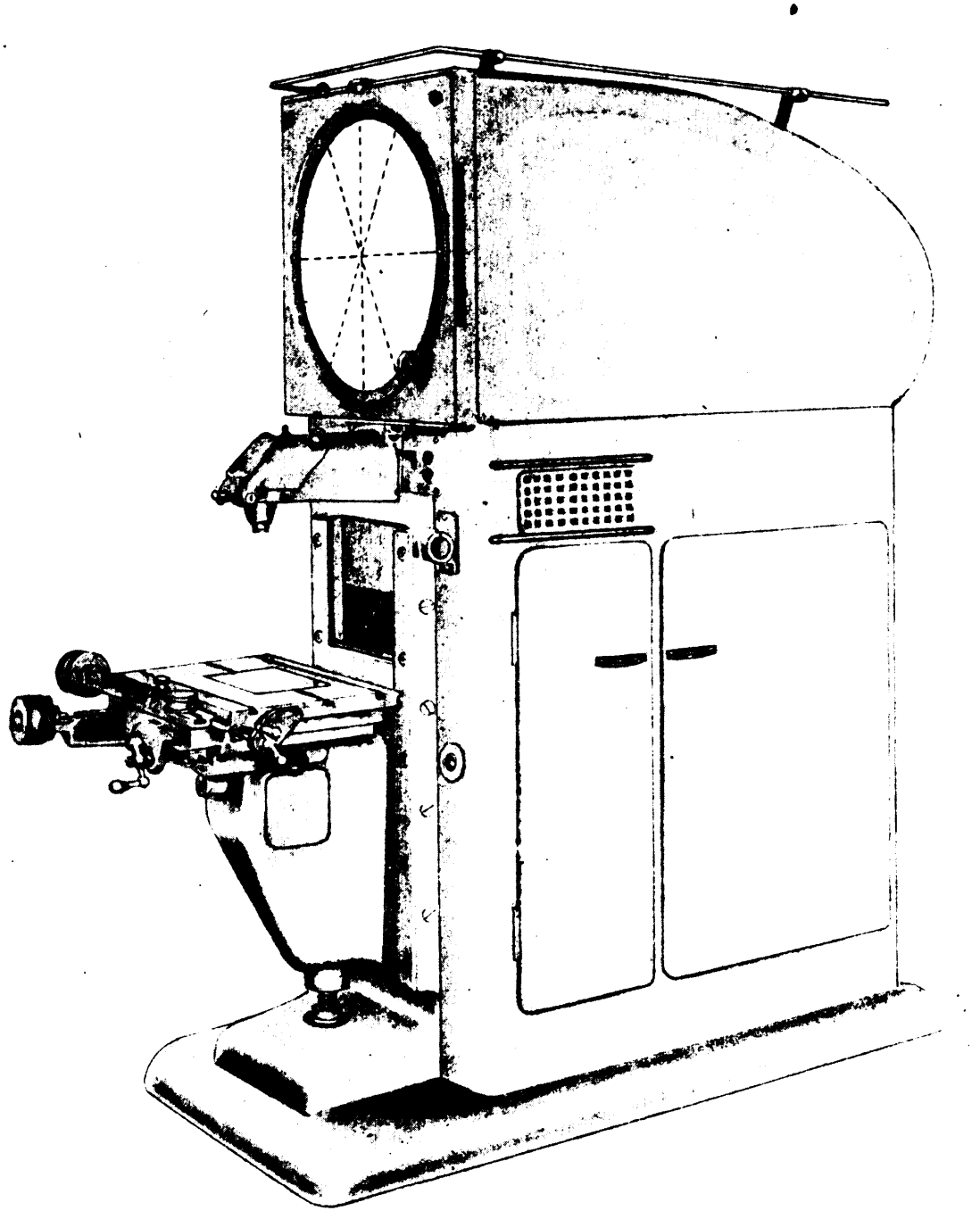

Figure 38. Contour measuring projector.

ground glass mounted in a ring which is graduated and provided with a vernier which permits the measurement of all angles to a minimum reading of 1 minute of arc. The ground glass of the screen is provided with fine broken reference lines, etched in the glass. These lines are filled with black pigment and can be matched with the image when taking measurements. The work table has a longitudinal and transverse travel and is equipped with micrometers having a minimum reading of 0.0001 inch.

4.7.3 Tool maker's microscope. The tool maker's microscope, (see fig. 39) is an optical instrument for measuring linear and angular dimensions. It consists of a microscope with a protractor head, mounted on a support column with adjustable tilt, and a mechanical stage permitting longitudinal, transverse, and angular measurement. The object being measured is seen through the microscope enlarged 30 or more times, depending on the objective lens which is used. The protractor head gives angular readings by vernier to 1 minute, and has two rotatable interrupted cross lines. The micrometer stage is operated by micrometer screws which have drums graduated to read 0.0001 inch per division. The full range of the stage is 4 inches of longitudinal motion and 2 inches of transverse. Of the longitudinal motion, 2 inches are by screws and 2 additional inches by insertion of gage blocks.

4.7.4 Optical dividing head. The optical dividing head (see fig. 40) is a final inspection instrument designed to give the greatest accuracy possible in circular measurement of angular spacing. The complete unit consists of the dividing head, surface plate, and tailstock. The measuring elements consist of a precision graduated circle, which is read by means of a microscope, and an auxiliary graduated drum which permits reading to 6 seconds or 1 second of arc. Accuracy within 2 seconds of arc may be obtained with this instrument. The dividing head may be equipped with a standard driver designed for work of various sizes and characteristics, a chuck having individually adjustable jaws, or a precision face plate. The surface plate is made of fine-grain cast iron alloy and mounted on a three point support. It is provided with a precision keyway for maintaining accurate alinement of tailstock to the dividing head by means of a key which fits into the keyway in the surface plate.

4.8 AUXILIARY EQUIPMENT. Some of the more important items of equipment, which are auxiliary to precision measuring instruments and comparators, are:

4.8.1 Sine bars and plates. —The sine bar and sine plate are tools designed for measuring angles accurately or for locating work to a given angle within very close limits. The sine bar (see figs. 41 and 42) consists of an accurate straightedge in which are set two hardened and ground plugs or buttons. These plugs or buttons must be of the same diameter, and their center distance is commonly an even 5, 10, or 20 inches to facilitate calculations. All reference surfaces must be parallel with each other and with the centerline of the plugs or buttons. The sine plate (see figs. 43 and 44) must meet the same requirements as the sine bar and differs only in that the reference surface is in the form of a plate. Some are furnished with a base plate and are hinged.

4.8.2 Dial indicators. A dial indicator, also called a dial gage, is a mechanical lever system or gear train used for amplifying small displacement and measuring it by means of a pointer which traverses a graduated dial. It is not a complete gage unless it is mounted on an arm extending from the frame of a machine, or on some type of pedestal or gaging fixture. The dial indicator. when so mounted, can then measure or indicate the difference between the piece being checked and the master or standard by which it was set.

Indicators are of two types, the dial indicator (gear train type) (see fig. 45) and the dial test indicator (see fig. 46). A sharp distinction between dial indicators and test indicators cannot be made. The dial indicator, however, will operate through a longer range, and transforms a small linear motion of a spindle, by means of a rack and pinion and a gear train, into a greatly magnified circular motion of a hand on a dial, while the test indicator employs a lever or combination of levers instead of a rack and pinion for magnification. Standard dial indicators are made in sizes ranging from 1⅜ to 3¾ inches in diameter. The

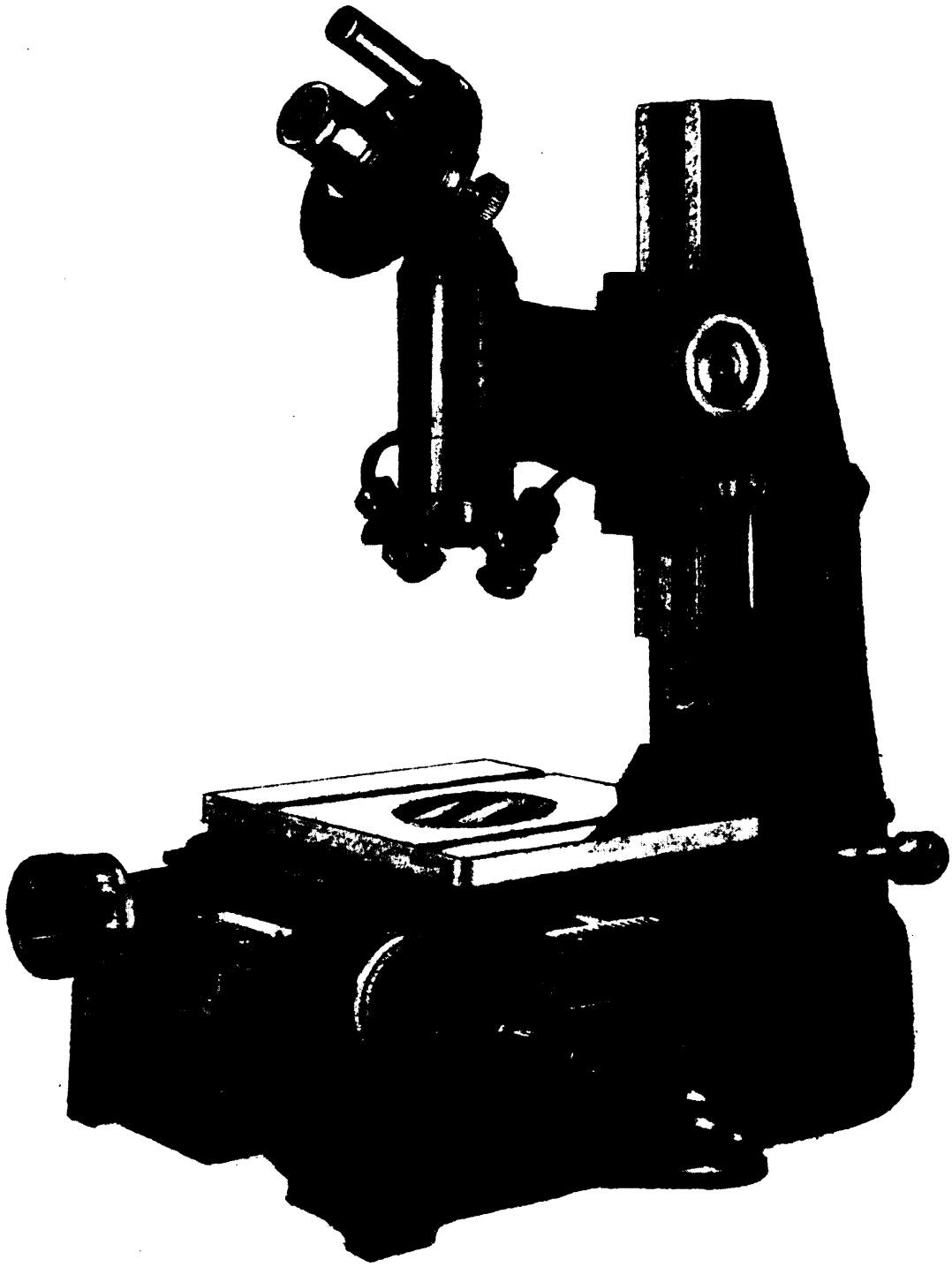

Figure 39. Tool maker's microscope.

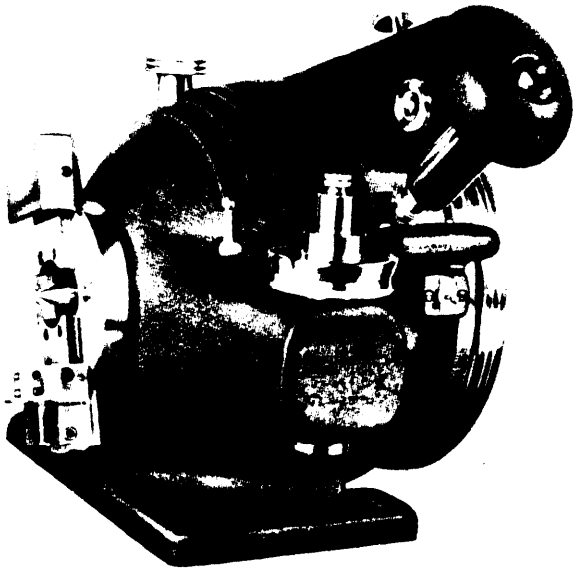

Figure 40. Optical dividing head.

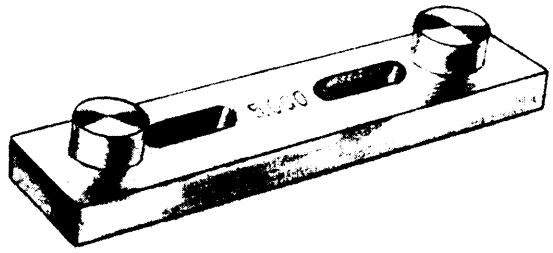

Figure 41. Sine bar.

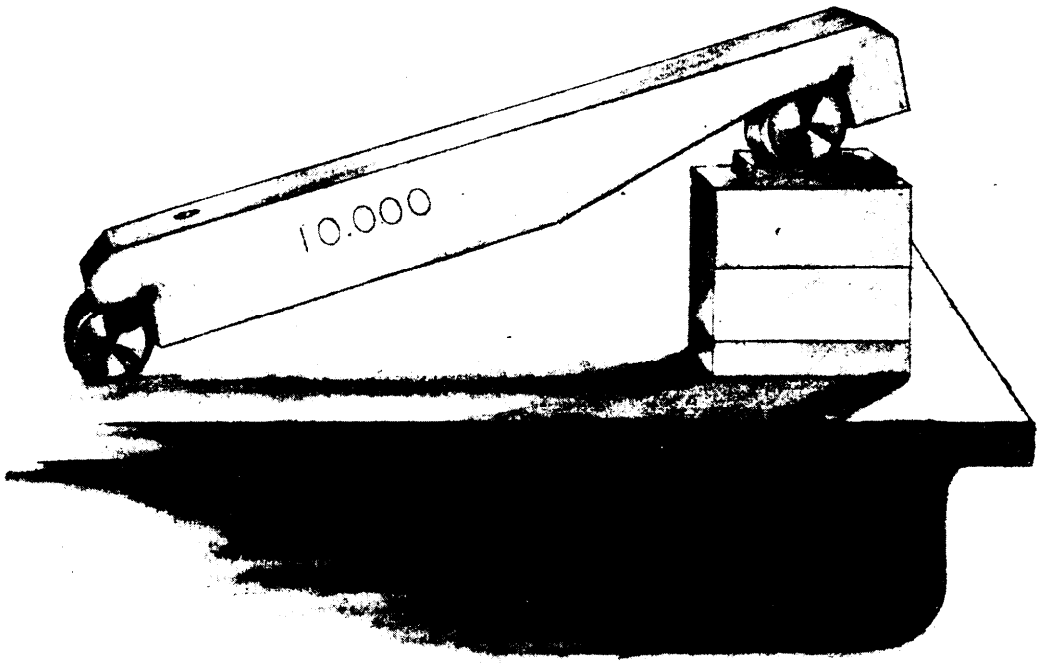

Figure 42. Sine bar set upon gage blocks.

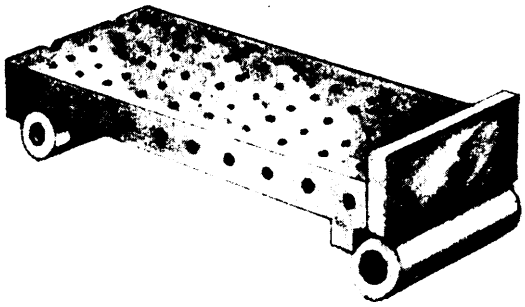

Figure 43. Sine plate.

length of the scale or range of measurement varies from 0.002 to 1.000 inch. The value of the individual graduations varies from 0.00005 to 0.001 inch. Regardless of the scale graduations, indicators are always classed either as thousandths indicators or as ten-thousandths indicators, that is, the scale graduations read either 0.001 or 0.0001" inch. The thousandth indicator is the one most commonly used on inspection fixtures. The ten-thousandth is used for checking dimensions to an accuracy beyond the range of the thousandth indicator, and the length of the spindle travel is much smaller.

4.8.3 Surface plates. A surface plate (see fig. 47) is a granite block, or a metal block or casting, whose working surface is finished to a required degree of accuracy. It provides an accurate flat surface which will serve as a reference plane for inspection and layout work. The working surface of the plate is usually produced by methods which eliminate any tendency of gage blocks or measuring instruments to wring or stick. Metal surface plates are made as rigid as possible by heavy construction and reinforcing ribs under the entire plate, as shown on figure 47, to minimize deflection when a load is applied.

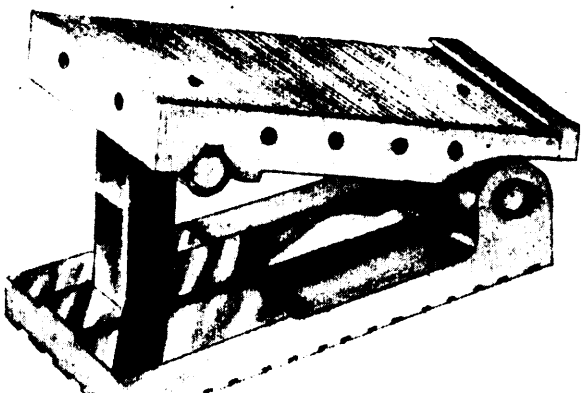

Figure 44. Sine plate with base plate.

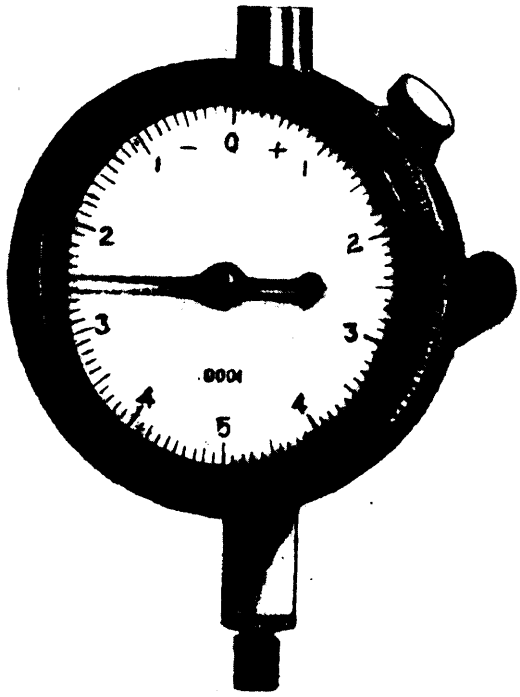

Figure 45. Dial indicator (gear-train type).

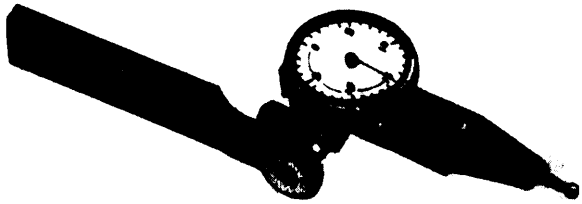

Figure 46. Dial test indicator.

4.8.4 Tool maker's flat. The tool maker's flat (see fig. 48) is a very accurate surface plate for the finest and most exacting measurements.

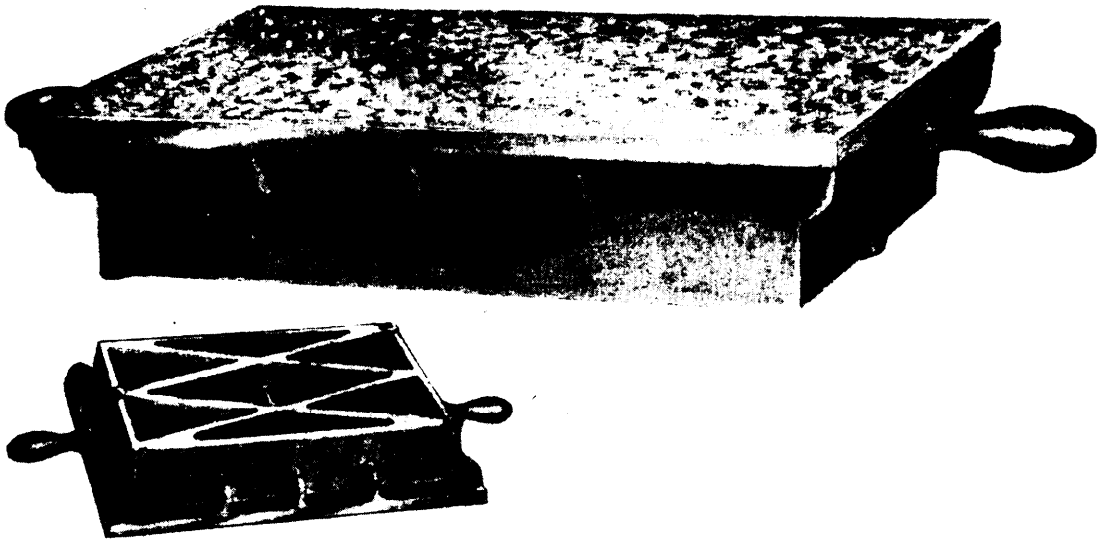

Figure 47. Surface plate.

The size of the flat is 5 inches in diameter with a thickness of 7/8 inch. Thus, the flat is limited to small work. It is recommended for use with gage blocks as they will wring to either surface of the flat. Tool maker's flats are made of steel, hardened, ground, and lapped, top and bottom to a tolerance of 0.000010 inch on flatness and parallelism.

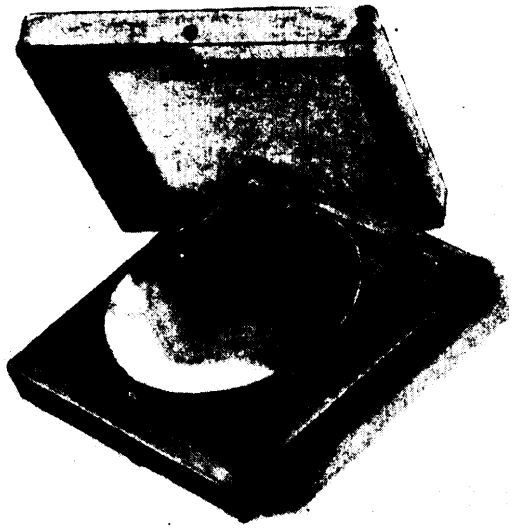

Figure 48. Tool maker's flat.

4.8.5 Hardened steel square. The hardened steel square (see fig. 49) sometimes called a beam square, consists of a thin blade mounted

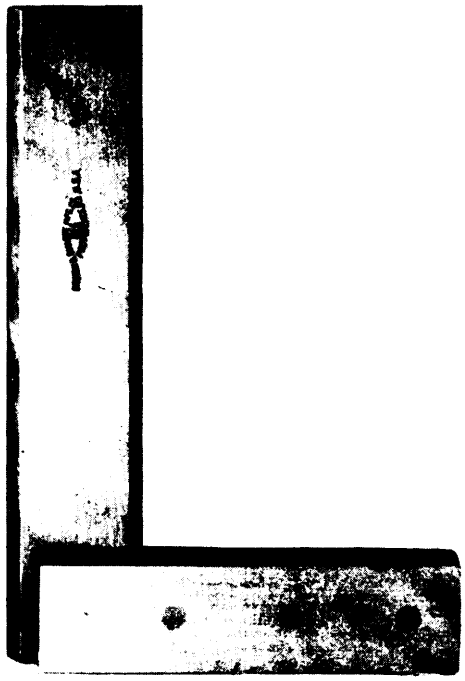

Figure 49. Hardened steel square.

at right angles to a beam several times as thick as the blade. The mounting is rigid, and both the inside and outside angles formed are right angles. Beam and blade are ground so that the sides of each are parallel and straight. The steel square is sometimes furnished with a scale on the blade and sometimes with a beveled blade that gives a better sight line. Such an edge, however, is liable to wear and damage. The inside corner of tile intersection between the beam and the blade should be recessed so that burrs on the edge of the part being checked will not affect the accuracy of the square.

4.8.6 Pipe thread gage checking block. The pipe thread gage checking block (see fig. 50) is a fixture designed to facilitate the checking of pitch and major diameters of American National taper pipe thread plug gages. The block is so constructed that the pitch diameter of a taper pipe thread plug gage can be checking by the three wire method with tile same ease as if it were straight thread. The major diameter of taper pipe thread plug gages or plain taper plug gages can be measured directly without the use of wires.

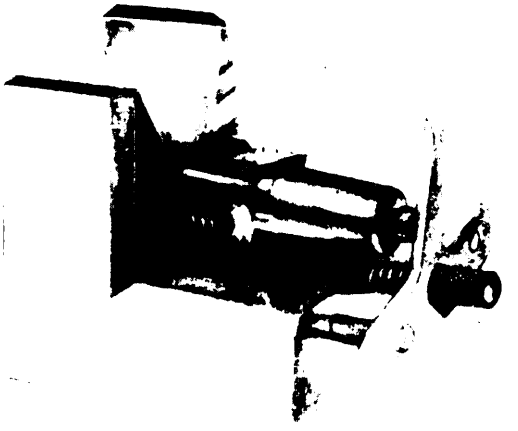

Figure 50. Pipe thread gage checking block.

5

TYPES OF GAGES

5.1 GENERAL

5.1.1 Scope. This section presents general descriptions of designs of various commonly used types of gages, including some designs which have been standardized by mutual agreement among makers and users. Gages made in accordance with recognized standards should be used whenever practicable, as the quantity production of gages, thereby made possible, yields considerable economies in their manufacture and procurement.

5.1.1.1 Standard gage blanks. Gage blanks are gages in their unfinished state, that is, prior to grinding and lapping their gaging (Dimensions to specified sizes. "American Gage Design Standard" gage blanks are those made to the design specifications promulgated by the American Gage Design Committee in the current issue of Commercial Standard CS8, Gage Blanks, obtainable from the Superintendent of Documents.

5.1.1.2 Standard screw thread gages. Standard limits of size of screw thread plug and ring gages and setting plugs for standard sizes, pitches, and classes of screw threads, are tabulated in the current issue of the National Bureau of Standards Handbook H28, Screw Thread Standards for Federal Services, obtainable from the Superintendent of Documents.

5.1.2 "Go" gages. "Go" gages control the extent of the tolerance in the direction of the limit of maximum metal, and represent the maximum limit of the internal member (i. e., shaft) and the minimum limit of the external member (i. e., hole). "Go" gages should be designed to check simultaneously as many dimensions as practicable. For example, in checking a rectangular hole, a rectangular plug "Go" gage would correctly gage both widths of the hole at one pass of the gage.

5.1.3 "Not Go" gages. "Not Go" gages control the extent of the tolerance in the direction of the limit of minimum metal, and represent the minimum limit of the internal member (i. e., Shaft) and the maximum limit of the external member (i. e.. hole). To be acceptable, parts must not enter or be entered by proper "Not Go" gages. "Not Go" gages should be designed to check only a single dimension. In checking a rectangular hole in order to insure that neither width is too large, it is necessary to check each width seperately with its own "Not Go" gage.

5.1.4 Acceptance check gages. A check gage is usually a gage to which other gages are fitted in order to determine their size during the gage-making process. They are also used by the laboratory to inspect the gages submitted for calibration.

5.1.5 Wear limit check gages. This category includes gages for the surveillance of gages in service, such as limit checks for twin rings, limit checks for snap gages on diameters at noses of fuzes, shells, etc.

5.1.6 Master setting gages. These gages are normally used for properly setting, adjusting, or checking inspection gages.

5.2 PLUG GAGES

5.2.1 Plain cylindrical plug gages. A plain cylindrical plug gage is considered to be the most elementary form of a gage. This gage is a cylinder, the cylindrical surface of which is true to the required degree of accuracy as to size, roundness, and finish and the sections of which, at right angles to the axis, are as nearly perfect circles as practicable. The axial length of the gage is sufficient to prevent the plug from being canted in the hole and to distribute wear over a large surface.

5.2.1.1 Standard designs. Four seperate designs have been adopted for plain cylindrical plug gages; the wire type design for ranges 0.030 to and including 0.510 inches; the taper lock design for ranges from 0.059 to and in-

eluding 1.510 inches; the reversible or trilock design with reversible gaging members for the range from 1.510 to and including 8.010 inches; and the annular design for the range 8.010 to and including 12.010 inches. For sizes 0.240 inch to and including 2.510 inches, both separate "Go" and "Not Go" and progressive gaging members are provided. Reference: Commercial Standard C58, Gage Blanks (latest edition).

5.2.1.2 Cylindrical plug gage, single-end, solid. This gage (see fig. 51) is merely a cylinder with a suitable handle integral with the gage. This form is capable of testing only one size of hole and can make only one test, either "Go" or "Not Go," but not both.

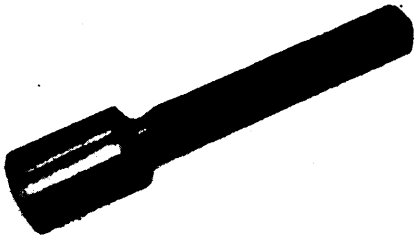

Figure 51. Cylindrical plug gage, single-end, solid.

5.2.1.3 Cylindrical plug gage, single-end, progressive. This gage (see fig. 52) has two adjacent cylinders with a common axis, one the "Go" gage and the other the "Not Go" gage.

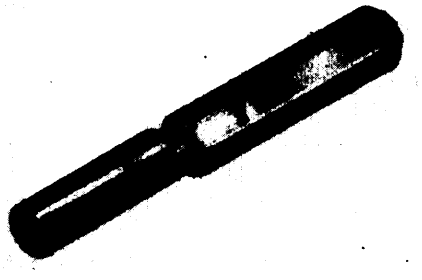

Figure 52. Cylindrical plug gage, single-end, progressive.

5.2.1.4 Cylindrical plug gage, double-end. This gage (see fig. 53) has the "Go" cylinder on one end of the handle and the "Not Go" on the other, either integral with the handle or with the gaging members and handle as separate parts.

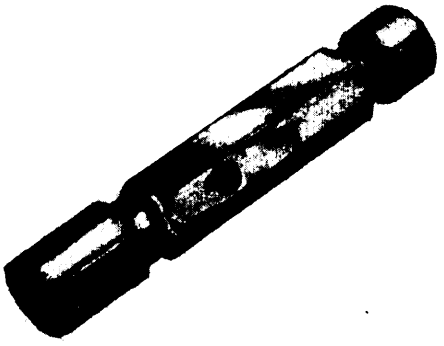

Figure 53. Cylindrical plug gage, double-end.

5.2.1.5 Cylindrical plug gage, replaceable. The replaceable type (see figs. 52, 53, and 54) is one in which the gaging element or cylinder may be separated from the handle, when worn, and replaced by a new one. The plug proper may have a tapered shank on one end, which assembles into a tapered hole in the handle, or may be the straight wire type which is secured in the handle by means of a chuck or collet type locking device.

Figure 54. Cylindrical plug gage, replaceable.

5.2.1.6 Cylindrical plug gage, reversible. In the reversible type (see fig. 55) the gaging member may be turned end for end and reassembled to the handle so as to present a sub-

stantially unworn surface for the work of gaging.

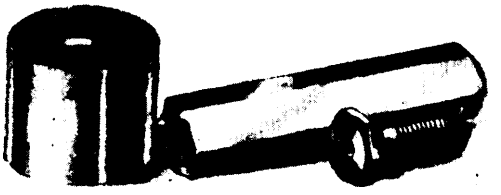

Figure 55. Cylindrical plug gages, reversible.

5.2.2 Plain taper plug gages. A plain taper plug gage (see fig. 56) is an internal gage, for the size control of conical holes, which has a tapered gaging surface but otherwise is similar to a plain cylindrical plug gage.

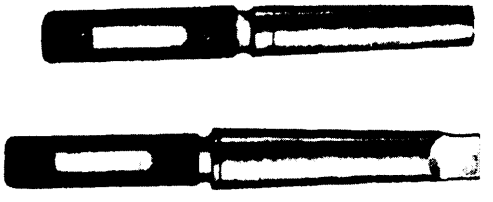

Figure 56. Plain taper plug gages.

5.2.3 Thread plug gages. The thread plug gage (see fig. 57) is the means generally used to check the thread in a tapped hole. There is no satisfactory method for directly measuring an internal thread, and the thread plug is the indirect means for checking product and ring gages alike. This gage is similar to the plain plug, except that the gaging surface has the form of a thread. The taper lock, reversible or trilock, and annular designs have been adopted for thread plug gage blanks and follow the plain cylindrical plug gage sizes. However, the length of the thread gaging member is slightly different in some instances.

5.2.4 Taper threaded pipe plug gages. The taper threaded pipe plug gage (see fig. **58)** differs from the straight thread plug gage in that the threads are tapered and of a specified length. Separate "Go" and "Not Go" gages are not used for inspecting tapered threads. The limits of size of taper pipe threads are incorporated in the gage in the form of steps or gaging notches representing basic, maximum, and minimum sizes.

5.2.5 Taper plain pipe plug gages. A taper plain pipe plug gage (see fig. **59)** is used to check the minor diameter of the tapped hole for size, and permissible truncation of the threads at the minor diameter. The permissible variations of the minor diameter, or thread truncation of the product, are transposed into longitudinal travel of the gage into the product and are shown by steps or gaging notches on the plug. There are six steps in all, arranged in pairs. One pair covers the allowable variation in truncation for a basic size thread; one pair is for a maximum size thread, and one pair is for a minimum size thread. Reference Specification AN–P-363.

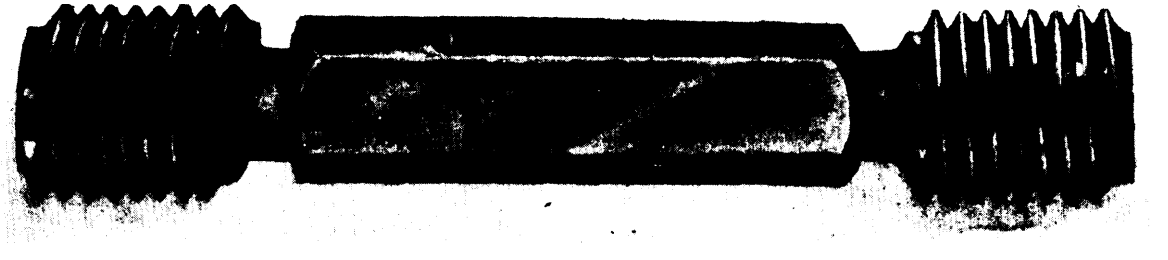

Figure 57. Thread plug gages.

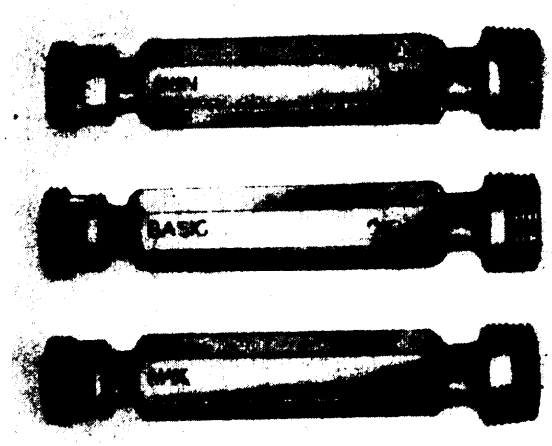

Figure 58. Taper threaded pipe plug gages.

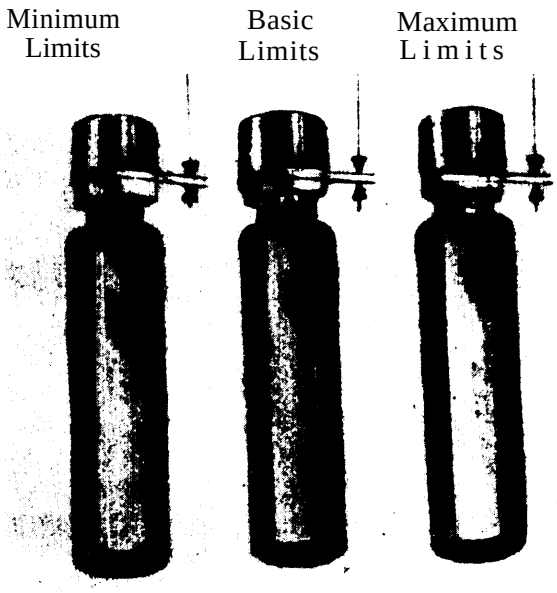

Figure 59. Taper plain pipe plug gages.

5.2.6 Spline plug gages. Spline plug gages are used to check splined holes in parts that operate on splined shafts. Spline gages are special as they are usually fabricated for the inspection of some particular part.

5.2.6.1 Involute spline plug gages. The involute spline plug gage (see fig. 60) contains all of the geometric elements of gears and, depending upon their design, may check these elements individually or as a composite.

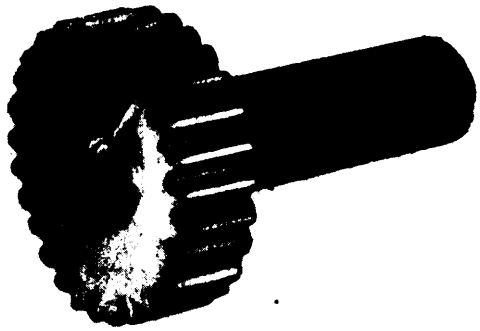

Figure 60. Involute spline plug gage.

5.2.6.2 Spanner gages. The straight -sided spline plug gage (see fig. 61) checks the elements of straight-sided splines in fittings, for straightness, spacing, tooth thickness or space width, concentricity, alinement, and parallelism as well as the composite of all elements.

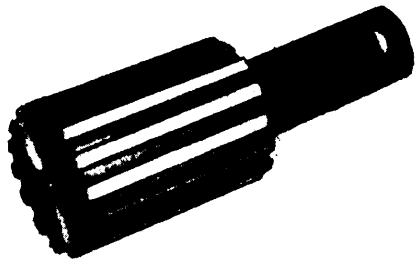

Figure 61. Straight-sided spline plug gage.

5.2.7 Alinement plug gages. Alinement plug gages (See fig. 62) resemble in appearance the cylindrical or progressive plug gage. However, they are usually longer and are used to check the alinement of two concentric holes of the same or different sizes.

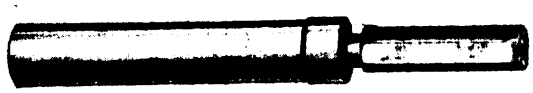

Figure 62. Alinement plug gages.

5.2.8 Graduated plug gages. Graduated plug gages (see fig. 63) are generally of the piloted type with the larger diameter graduated, and are used principally for checking micrometer scales on fire control instruments.

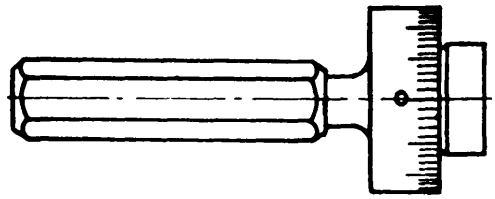

Figure 63. Graduated plug gages.

5.2.9 Flat plug gages. Flat plug gages (see fig. 64) have cylindrical gaging surfaces, and are usually made from flat stock, the thickness of which may be about one-fourth of the cylindrical portion.

Figure 64. Flat plug gages.

5.2.10 Miscellaneous plug gages. These gages (see fig. 65) are made to meet specific conditions and have various cross sections. The cross section designates the type of plug gage, such as keyed, grooved, square, rectangular, triangular, oval, etc.

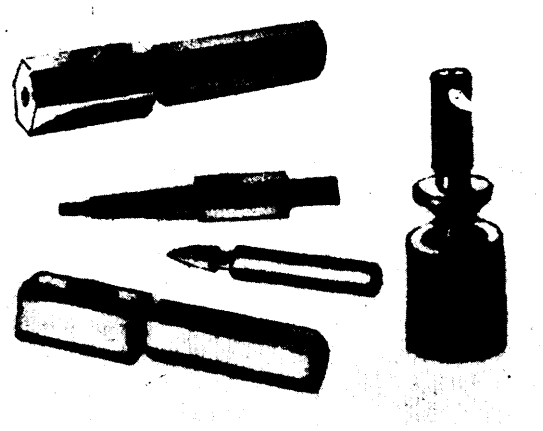

Figure 65. Miscellaneous plug gages.

5.3 RING GAGES

5.3.1 Plain ring gages. Plain ring gages (see fig. 66) are external gages of cylindrical form, employed for size control of external diameters. The use of the solid ring gage design for external size control has been fairly well established. In the smaller sizes of plain ring gages, a hardened bushing ma-y be pressed into a soft gage body in place of the one-piece ring gage. This design is optional in the range above 0.059 to and including 0.510 inch. However, the single-piece gage may be employed in this range, and is standard in all cases above 0.510 inch. Gages in sizes above 1.510 inches are flanged, in order to eliminate unnecessary weight and to facilitate handling. Blank dimensions of "Go" and "Not Go" rings of identical size range are the same, but an annular groove is provided in the periphery of the "Not Go" blank as a means of identification. Gages in sizes above 5.510 inches are provided with ball handles.

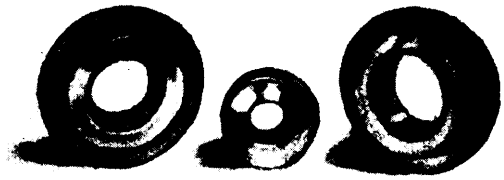

Figure 66. Plain ring gages.

5.3.2 Twin ring gages. Twin ring gages (see fig. 67) consist of a flat blank or gage body of unhardened steel, bored out to accommodate "Go" and "Not Go" ring gage bushings of hardened tool steel. These gages are convenient for the rapid inspection of certain types of small precision parts.

5.3.3 Progressive ring gages. Progressive ring gages (see fig. 68) are a variety of the plain ring gages, similar to progressive plug gages in that they have two diameters for checking 'Go" and "Not Go" dimensions. They are used for cylindrical work of rather short lengths having such close tolerances that a "Not Go" snap gage is undesirable. They are also used to advantage

on soft or thin walled material which might be distorted by snap gages.

Figure 67. Twin ring gages.

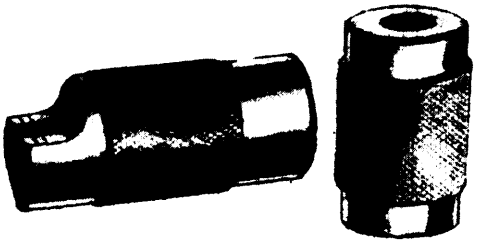

Figure 68. Progressive ring gages.

5.3.4 Taper ring gages. Taper ring gages are variations of plain ring gages except that the shafts gaged are conical rather than cylindrical.

5.3.5 Thread ring gages. The thread ring gage (see fig. 69) is used to inspect external or male screw threads. The following types of thread ring gage blanks for straight threads have been standardized :

a. A thin flat disk type with one adjusting slot (two slots optional) for all diameters and pitches, both "Go" and "Not Go," Nos. 0 to 6, inclusive.

b. A thin flat disk type with two adjusting slots for the following:

(1) All diameters and pitches, "Go" and "Not Go" No. 6 to and including ½ inch.

(2) Fine pitches "Go" and "Not Go" only ½ to and including 5 ½ inches.

(3) Coarse pitches, "Not Go" only ½ to and including 5 ½ inches.

c. A thick flanged type with two adjusting slots for all "Go" coarse pitch gages, ½ to and including 5 ½ inches.

d. A thin flat type provided with ball handles and with a plurality of adjusting slots for all fine pitch "Go" gages and all "Not Go" gages in the range 5.510 to and including 12.260 inches.

e. A thick flanged type provided with ball handles and a plurality of adjusting slots for all coarse pitch "Go" gages in the range 5.510 to and including 12.260 inches.

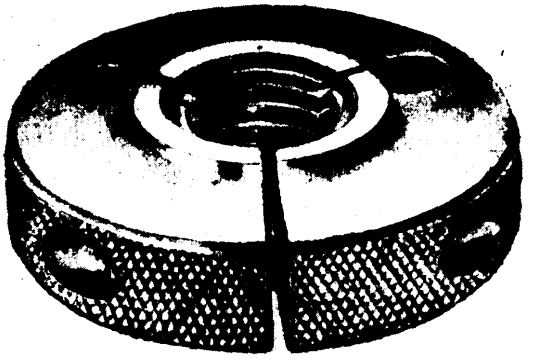

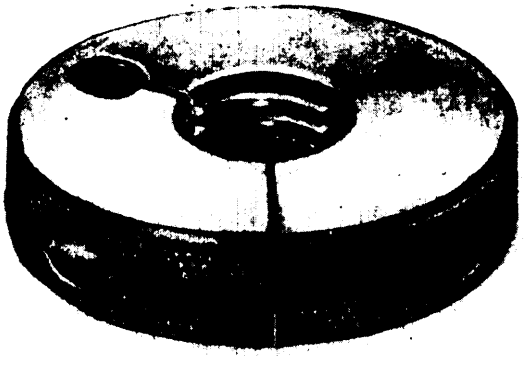

Figure 69. Thread ring gages.

5.3.6 Taper threaded pipe ring gages. The taper threaded pipe ring gages (see fig. 70) differ from the straight thread ring gages in that the threads are tapered and of a specified length.

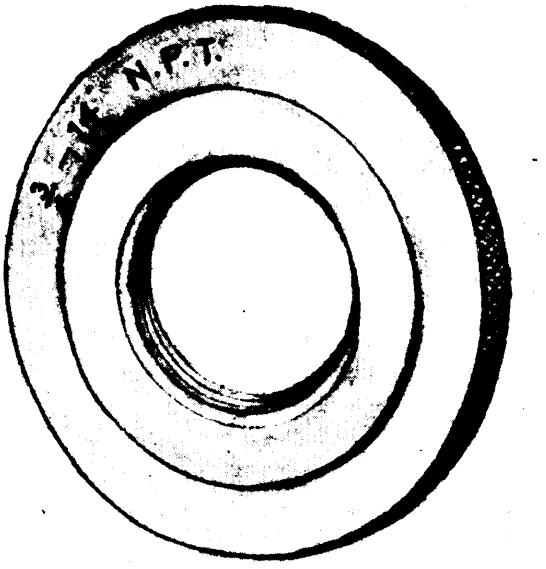

Figure 70. Taper threaded pipe ring gage.

5.3.7 Taper plain pipe ring gages. Taper plain pipe ring gages (see fig. 71) are the solid disk type and are used to check the major diameter of the external pipe thread for size and permissible truncation of the thread at the major diameter. The permissible variation of the major diameter of thread truncation of the product is transposed into longitudinal travel of the gage on the product and are shown by steps or gaging notches on the ring. There are six steps in all, arranged in pairs. One pair is for the maximum size thread; one pair is for a minimum size thread, and one pair is for a basic size thread. Reference Specification AN-P-363.

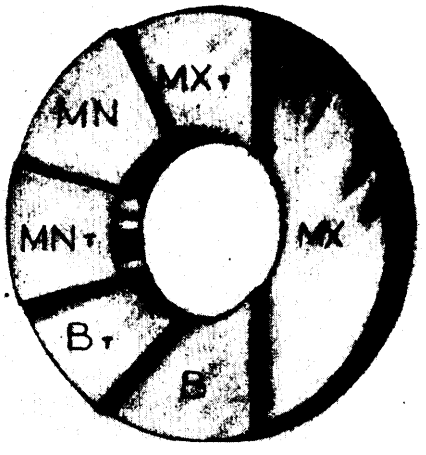

Figure 71. Taper plain pipe ring gage.

5.3.8 Spline ring gages. Spline ring gages (see fig. 72) are used to check splined shafts, either straight-sided or involute, and control the same elements as the spline plug gage. These gages are considered special, as they are usually designed and made for the inspection of some particular part.

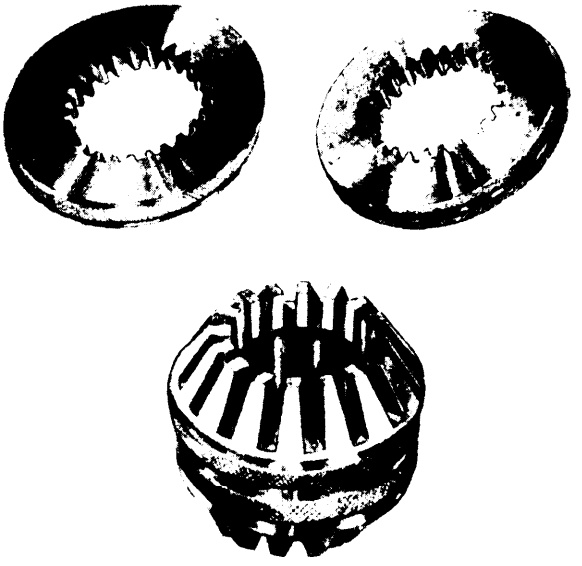

Figure 72. Spline ring gages.

5.4 TRIROLL GAGES

5.4.1 Threaded pipe triroll gages. The threaded pipe triroll gage (see fig. 73) is used to provide a functional check on pitch diameter, taper, angle, lead, and thread form of either right- or left-hand taper pipe threads. This

Figure 73, Threaded pipe triroll gage.

gage checks the full thread length and has the advantage of permitting thread form, lead) angle, or off-taper conditions to be checked visually when the part is in the gage.

5.4.2 Taper plain pipe triroll gages. Taper plain pipe triroll gages (see fig. 74) are designed for use in conjunction with the pipe thread triroll gage and check the major dianmeter of external pipe threads for size and the permissible truncation of the thread crest in relation to the thread size or pitch diameter. Off-taper conditions are clearly visible when the part is in the gage.

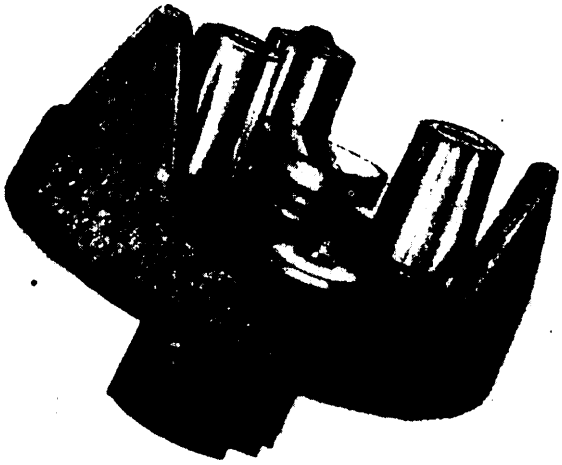

Figure 74. Taper plain pipe triroll gage.

5.5 SNAP GAGES

5.5.1 Snap gage construction. A snap gage (see fig. 75) consists fundamentally of two parallel measuring surfaces (points or anvils) supported in such a manner that the distance between their measuring surfaces represents the distance to be checked. The snap gage may be of a single piece, built up, or adjustable construction. It may also be single-end, progressive, or double-end.

5.5.2 Adjustable length gages. The adjustable length gage (see fig. 76) employs for gaging members, and for adjusting and locking means, the same fittings that are used in adjustable snap gages. The gage heads are designed either with two pairs of gaging members on the same side of the spacing bar, or with the "Go" and "Not Go" members on opposite sides of the spacing bar. These gages may be used to cover a very wide range, as the spacing bar may be constructed in any length desired.

5.5.3 Combination ring and snap gages. Snap gages are sometimes made in combination with ring gages (see fig. 77) with the ring as the "Go" and the snap as the "Not Go" gage.

5.5.4 Thread snap gages. There are several types of thread snap gages, as follows:

5.5.4.1 Roll thread snap gages. Roll thread snap gages (see fig. 78) may be substi-

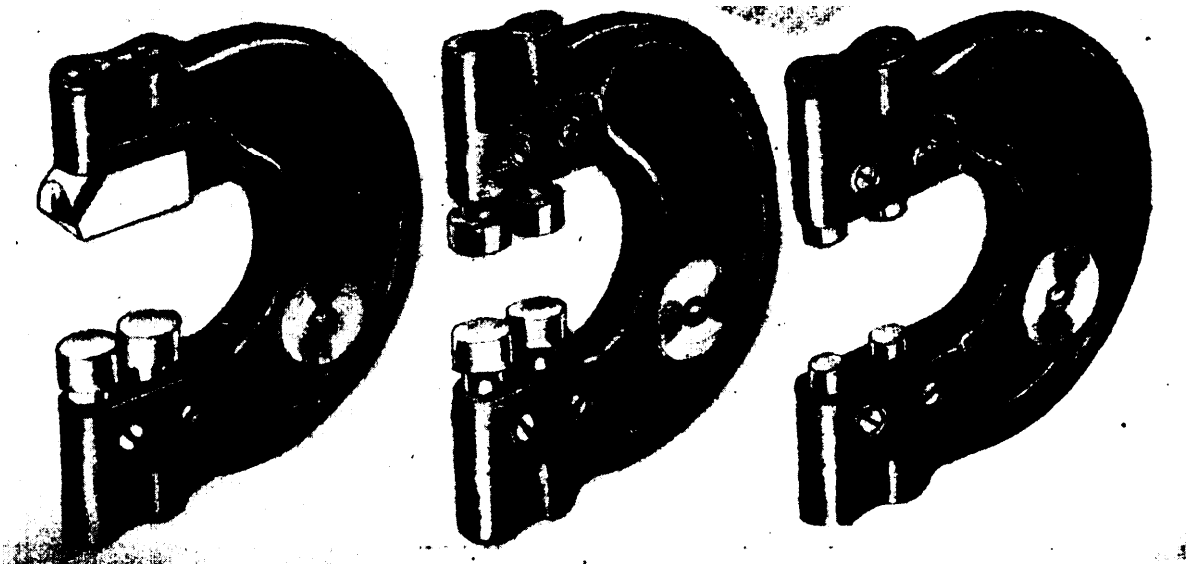

Figure 75. Adjustable snap gages.

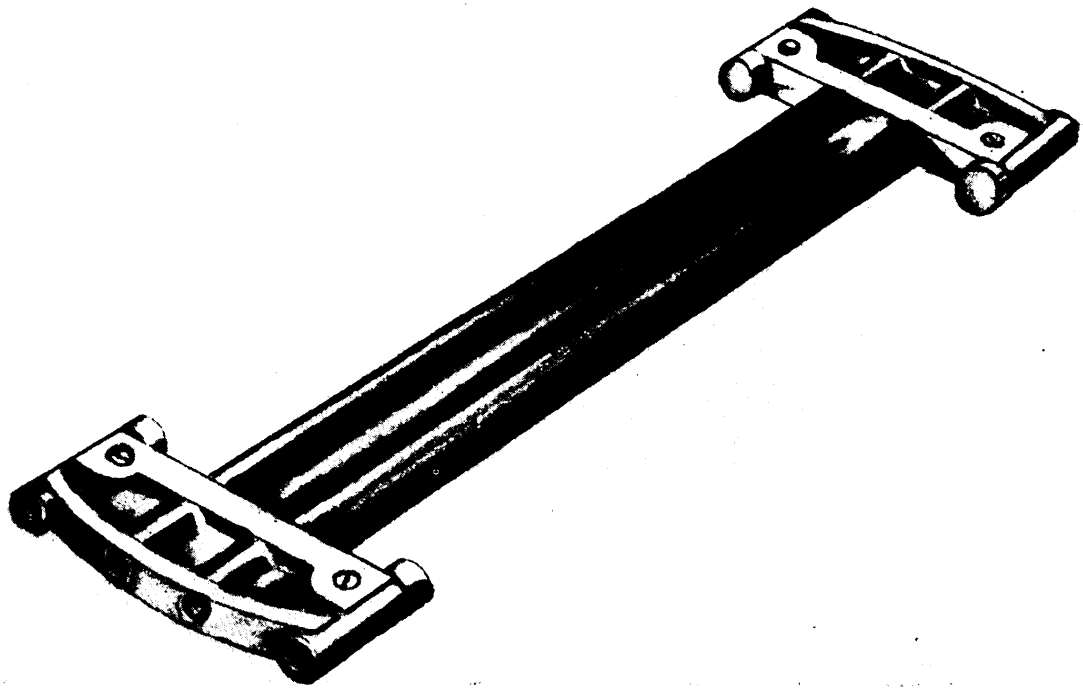

Figure 76. Adjustable length gage.

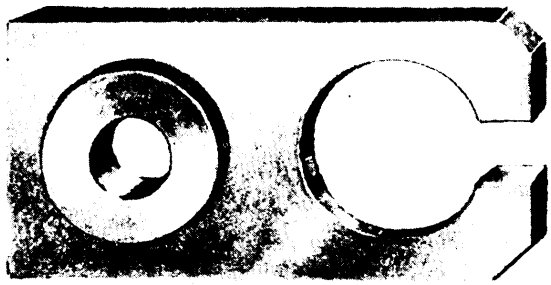

Figure 77. Combination ring and snap gage.

Figure 78. Roll thread snap gage.

tuted for standard thread ring gages when authorized, as they have the advantages of speed in gaging and long wear life. The setting or resetting of roll thread snap gages should be performed by the gage laboratory whenever possible.

5.5.4.2 Flat-anvil thread snap gages. Flat-anvil thread snap gages (see fig. 79) use flat anvils with a series of grooves representing the number of threads per inch. It is well adapted for parts intended for selective assembly.

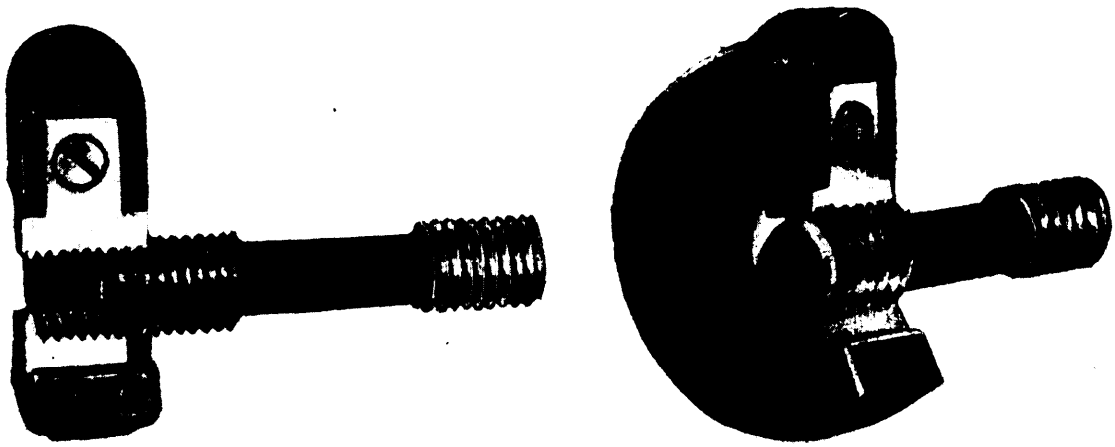

Figure 79. Flat-anvil thread snap gage.

5.5.4.3 Single-point thread snap gages. Single-point thread snap gages (see fig. 80) are particularly adaptable to "Not Go" checking, but are not recommended for use as "Go" gages. One anvil of the gage is a cone and the other a "V".

Figure 80. Single-point thread snap gage.

5.5.4.4 Segment roll thread snap gages. Another very satisfactory thread snap gage (see fig. 81) comprises two nearly semicircular gaging members similar to two half nuts. These are mounted on pivots to permit them to open and close as the work is passed through. The principal advantage of the gage is that it inspects the entire circumference of the threaded part instead of merely a single diameter, as do other thread snap gages.

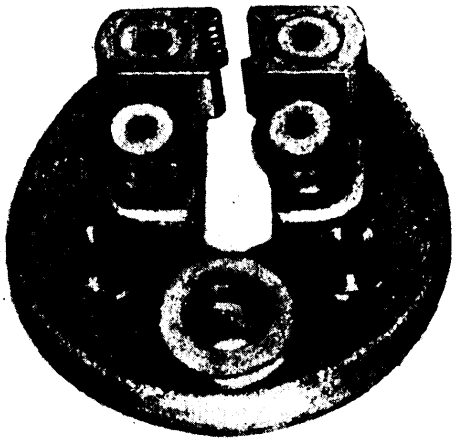

Figure 81. Segment roll thread snap gage.

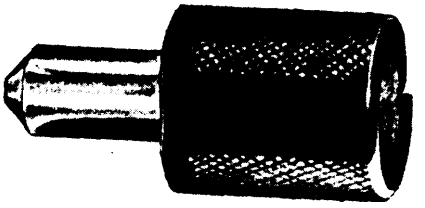

Figure 82. Flush pin gage.

5.6 MISCELLANEOUS AND SPECIAL GAGES

5.6.1 Flush pin gages. The flush pin gage (see fig, 82) is essentially sleeve containing a pin or plunger, which moves freely, but not loosely, therein. The top of the sleeve is accurately finished and lapped with a step representing the tolerance on the component, and both surfaces coming in contact with the work are also lapped. This type is for gaging the depth of holes, height of bosses, location of holes, etc.

5.6.2 Spanner gages. The spanner gage (see fig. 83) is generally a rectangular holder containing two or more pins for gaging distance between holes, such as spanner holes.

5.6.3 Fixture gages. Occasionally a problem will arise in which the test to be made is not a simple distance, size, or shape, but perhaps a combination of any or all of these. In these cases, the dimensions are usually located from a specific point or center, and a fixture gage (see fig. 84) is required to determine the accuracy of their relationship. These gages should be designed so that the work is accurately supported at the point from which the dimensions are taken, with careful consideration being given to the manner in which the

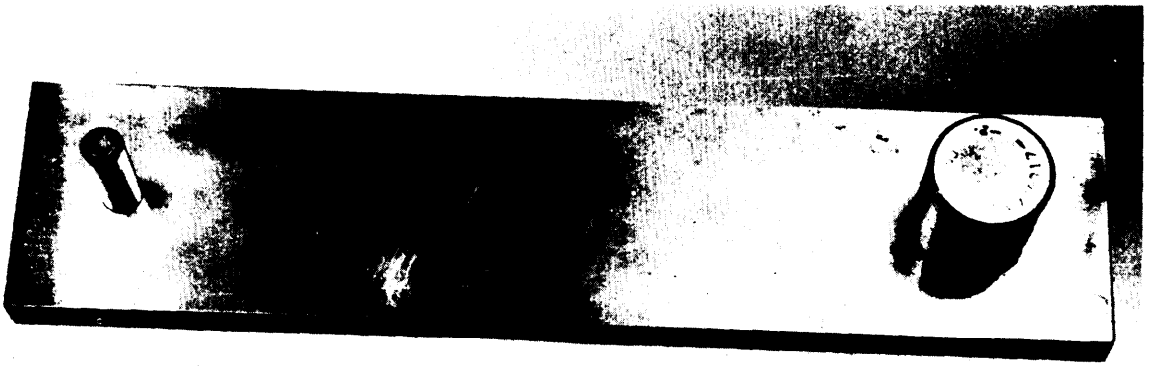

Figure 83. Spanner gage.

part will function or assemble. Holes may be checked by plugs or flush pins which are an integral part of the fixture and are guided with proper accuracy to the locating points.

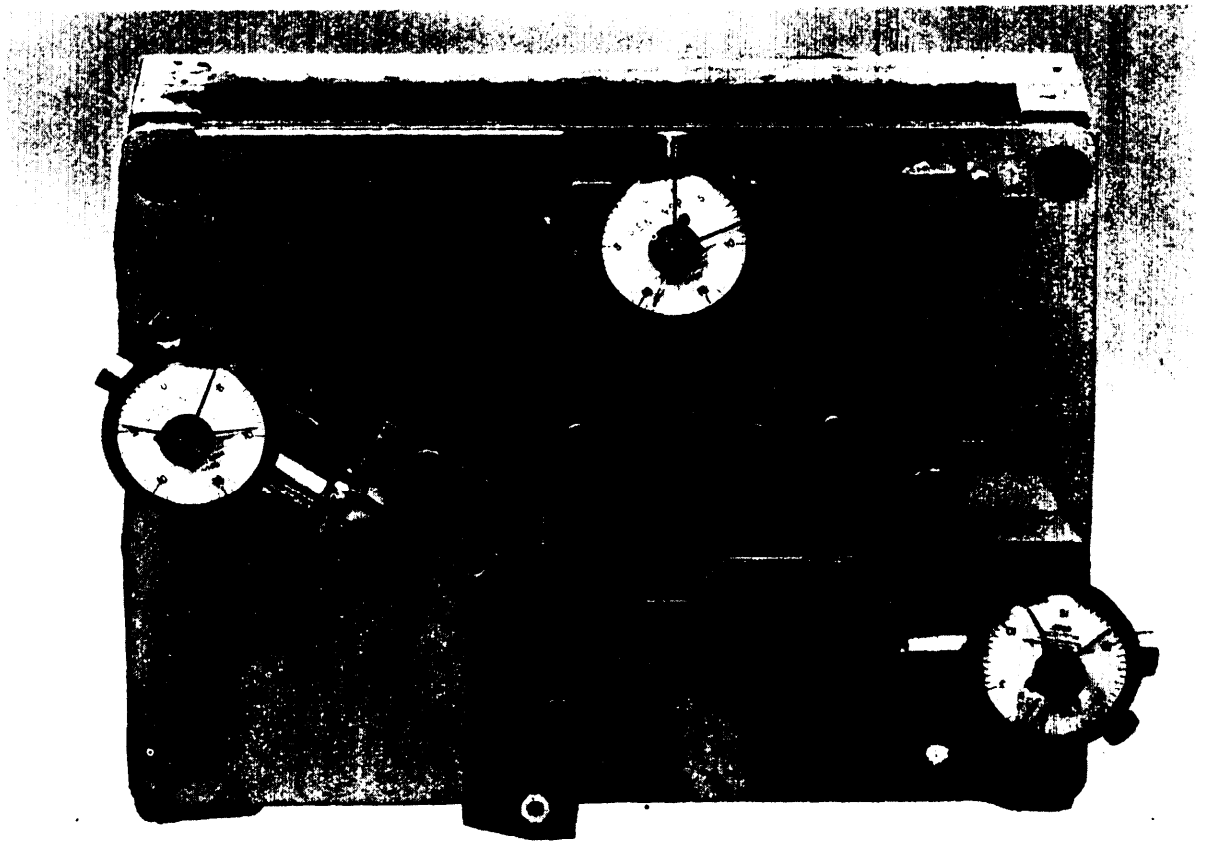

Figure 84. Fixture gage.

5.6.4 Concentricity gages. In order to verify the concentricity of elements having a common axis, or to limit the eccentricity to a permissible amount. a gage of special design is required to meet the specific conditions. These gages (see fig. 85) may be simple, as for checking a hole and counterbore, or complicated, as for checking simultaneously the relation of several integral holes or shaft sections of various diameters.

5.6.5 Template or profile gages. In order to check the contour or outline of a piece, a template or profile gage (see fig. 86) is generally used. These gages are usually a negative of the shape of the work to be gaged, so that when the part and the gage are placed together the light is shut out between the contour line of the part and the gage, when the part is correctly made.

5.6.6 Functional gages. Functional gages (see fig. 87) determine whether or not a part or assembly of parts will assemble and function with some other part or assembly. One of the best examples of this type of gage is the profile alinement gage or the chamber gage, used to check a complete round of ammunition after assembly of the cartridge case and the projectile. This gage simulates the chamber

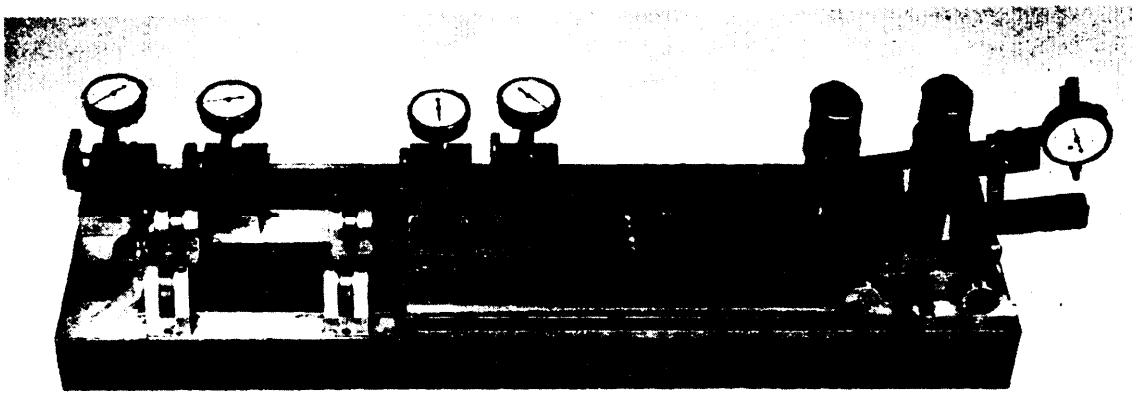

Figure 85. Concentricity gage.

Figure 86. Template or profile gage.

of the gun into which the round must fit. Other types of functional gages include spline and concentricity gages.

5.6.7 Chamber gages. Usually a chamber gage (see fig. 88) only assures that the piece or assembly will fit into the space allotted for it. It does not necessarily show whether or not the component or assembly is correct. In fact, the various elements of the work may not be acceptable but would be passed by the chamber gage. Therefore, it is evident that various elements of the work must also be gaged individually. The larger chamber gages are made of several rings, held in alinement and spacing by sleeves, each ring representing a "Go" gage for a portion of the component. A thorough knowledge of the requirements that the assembly must meet is necessary in order

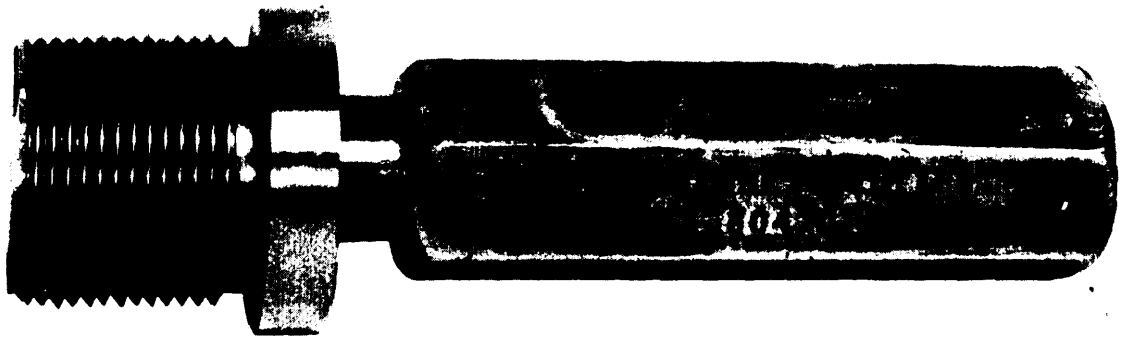

Figure 87. Functional gage.

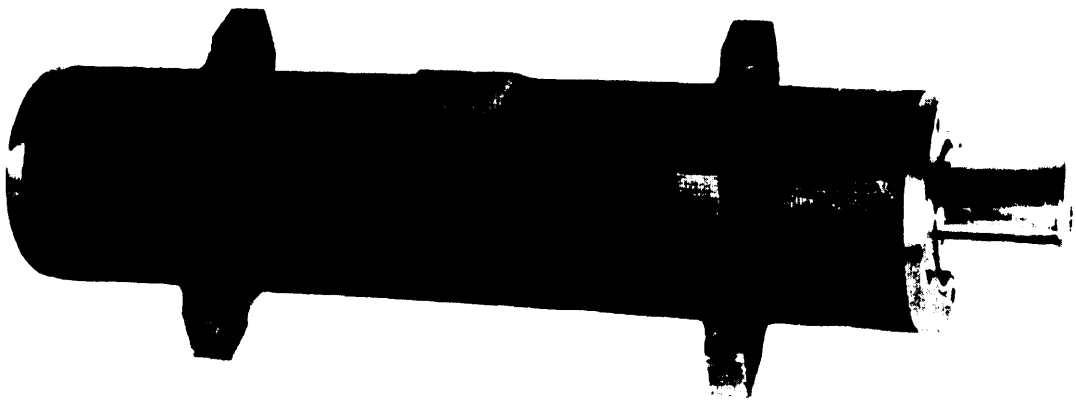

Figure 88. Chamber gage.

that the gage will pass a large number of assemblies and still have a maximum wear life.

5.7 AIR GAGES. By measuring the pressure of air in, or the flow of air through, a clearance space between a gaging spindle of a given size and the work being gaged. it is practicable to gage parts to a high degree of accuracy. Air gages (see fig. 89) are primarily for checking internal diameters. However, they can be used for gaging external diameters and for gaging the distance between both internal and external parallel flat surfaces, especially in instances where it is not desirable to use gaging pressure, and where these distances must be checked over considerable lengths as in long strips of sheet metal, or long bores.

5.7.1 Pressure type air gage. The pressure type air gage operates on the principle of varying air pressures. In using this type of gage, it is necessary to wait for the pressure in the air column to equalize; the longer the column, the longer the time to wait for equalization.

5.7.2 Flow type air gage. This gage operates on the principle of varying air flow at constant pressure. With this gage, the gaging spindle and the indicating instrument may be widely separated. The spindle may be an integral part of the gage or at the end of a long

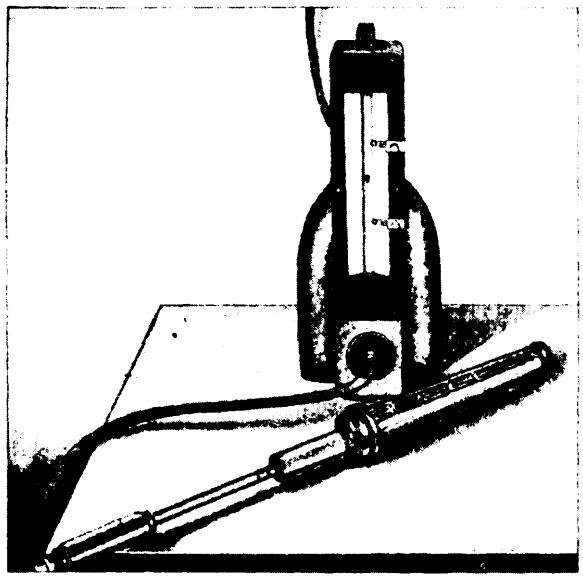

Figure 89. Air gage.

length of flexible tubing. Response is practically instantaneous in either case. This gage checks internal diameters, bell mouth, out-of-roundness, and the average diameter of thin wall cylinders.

5.7.3 Air snap gage. Air snap gages are used for checking external dimensions for diameter, taper, out-of-roundness, and wall thickness. Thin walled cylinders can be checked without danger or distortion. Highly finished or soft plated parts can be checked with a minimum possibility of marring or scratching.

5.8 BORE INSPECTION DEVICES

5.8.1 Star gages. Star gages (see fig. 90) are instruments used to measure accurately bore diameters. They are used chiefly to measure the normal or abnormal wear and erosion of bores and chambers of cannon to determine their remaining accurate life and their fitness for use; and to measure pits, burrs, etc., which occasionally. form in the bores of cannon. Star gages are used during the manufacture of cannon to determine the interior diameters of mating components such as tubes, jackets, hoops, liners, etc. They may also be used to measure accurately the inside diameters of recoil cylinders, recuperator cylinders, and other objects of circular bore.

5.8.2 Dial indicator bore gages. Dial indicator bore gages (see fig. 91) are spring actuated devices for measuring variations in bore diameters. All dial indicator gages for star gaging cannon of 37-mm caliber and higher are

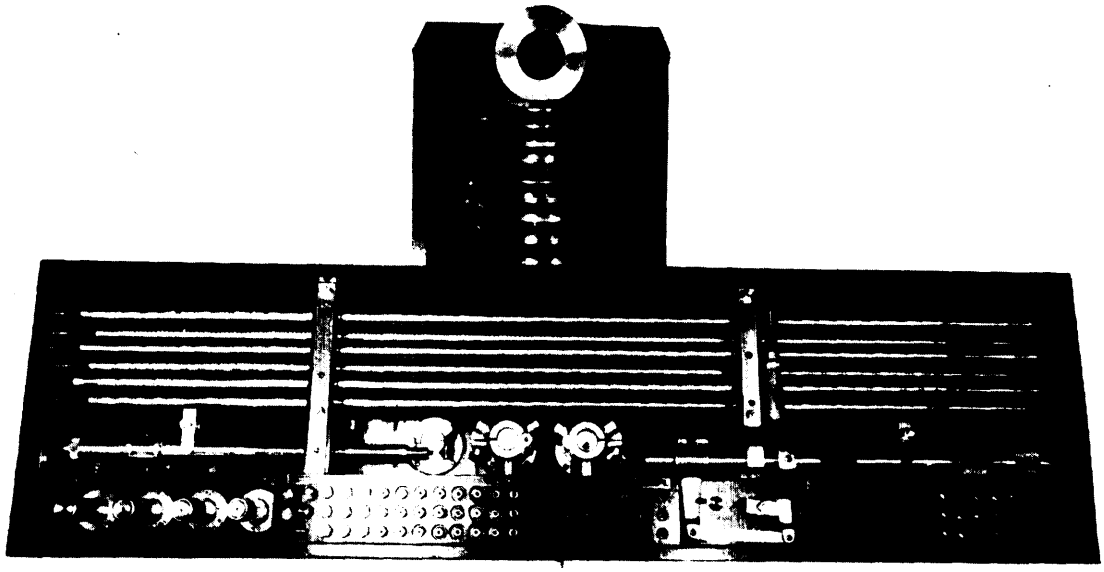

Figure 90. Star gage.

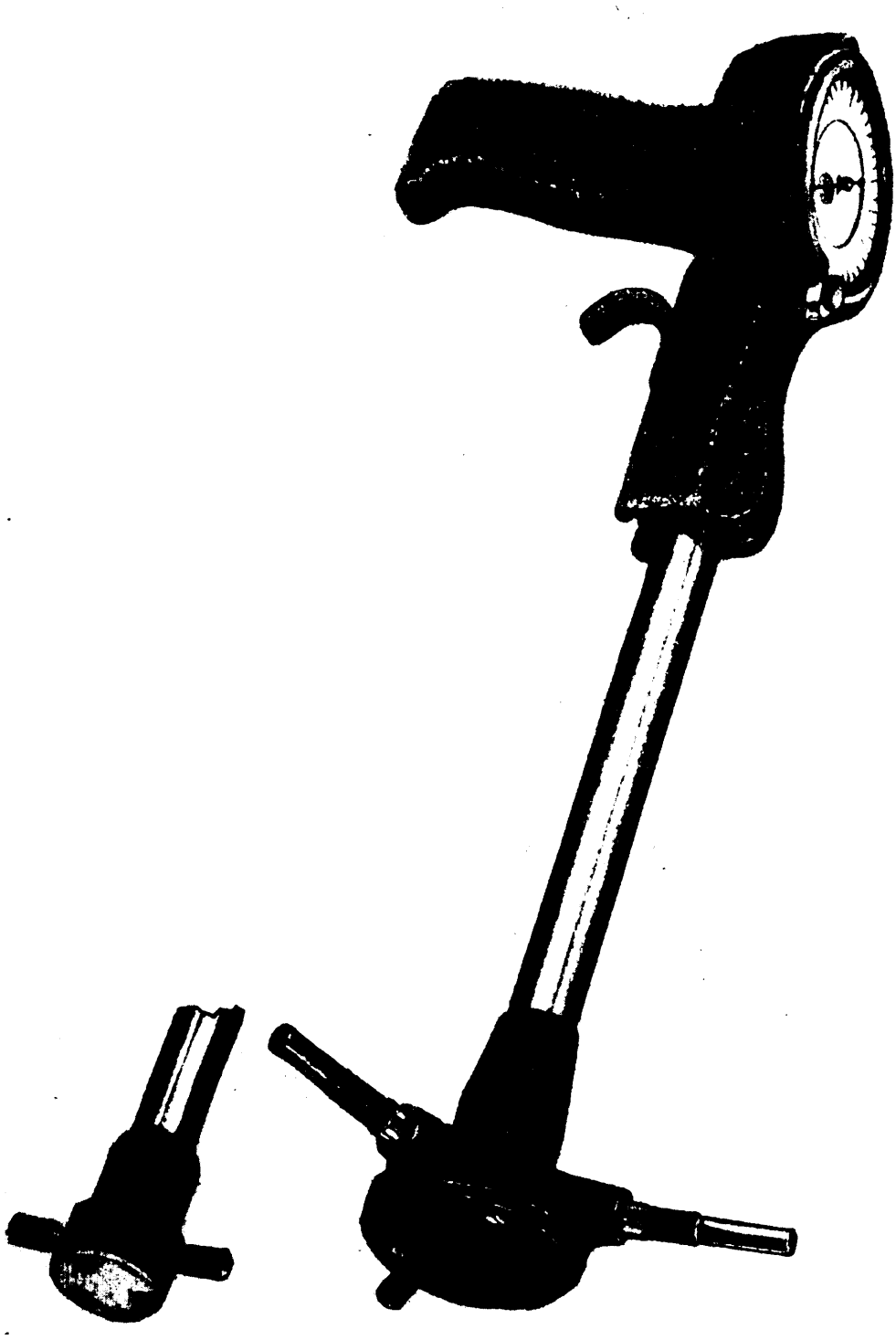

Figure 91. Dial Indicator bore gage.

similar in construction and operation. They comprise a head tube, indicator housing tube, and indicator housing assembly.

5.8.3 Horoscopes. Horoscopes are devices used for visual examination of cannon or similar tubes. Several types are manufactured under different trade names. Each horoscope includes an illuminating head which contains a small mirror or a small prism and one or more lamps; a cable for connecting the lamps to the source of electric power directly, or to a transformer; one or more tubes, each containing at least one condensing lens; and an ocular attachment.

5.8.4 Mirror and lamp devices. The mirror and lamp devices utilize a convex lens or a concave mirror for magnifying the portion of the bore being examined. These devices are used precisely as horoscopes provided with heads having mirrors.

6

CARE, USE, AND MAINTENANCE

6.1 GENERAL. This section deals with the care, preservation, maintenance, and use of gages.

6.2 SURVEILLANCE OF GAGES

6.2.1 Identification marking. It is important that proper identification markings and sizes be stamped on all gages. Such identification markings should, in all cases, agree with drawings and gage record cards.

6.2.2 Loan of gages to contractors. Inspectors will not loan gages to employees of contractors unless properly authorized. Gages shall not be left where they can be used, or tampered with, by unauthorized persons.

6.2.3 Cleaning. Prior to use, and again after being used and prior to storage, gages shall be cleaned in Stoddard solvent or other cleansing fluid, so that all shop coatings, dirt, metal chips, finger prints, and other foreign substances are completely removed. Cleaning is best accomplished by dipping in an agitated solvent. When this is not practicable, the items shall be cleaned by using a soft brush or clean cloth soaked in solvent. Care shall be taken to prevent trapping of solvent in holes or crevices.

6.2.4 Preservation procedure. Gages for storage, for shipment between facilities, or for shipment from a facility to a gage laboratory, shall be coated with a corrosion preventive as soon as possible after cleaning operations. The corrosion preventive to be used will depend on the type of gage being stored or shipped. An approved rust-preventive compound, light or medium, should be used on unit gages and fixture gages, except in the case of fixture gages having internal, close-tolerance gaging surfaces. These should be coated with a light lubricating oil to which an approved preservative has been added. Fixture gages incorporating dial indicators should have the indicators removed before preservation.

6.2.5 Maintenance and control procedures. Standard procedures for the maintenance and control of gages are for the purpose of assuring the supply of dimensionally correct gages at all times. They include the detection of damaged gages; assuring that dimensionally correct gages are on hand to meet all requirements; and assuring that all gages in use are at all times in accordance with applicable drawings and specifications, and the latest revisions thereof. Gages in use must be checked periodically to insure that they have not worn to the extent that they accept defective materiel or reject acceptable materiel. Various systems have been devised, based on usage and wear life that can be expected from the various types of gages. Periodic inspect ion of gages should be carried on in all manufacturing plants supplying materiel to the services. The following are examples of systems which have been used with satisfactory results.

6.2.5.1 Gage records. A gage record card is filled out for each gage at the time it is placed in use. The information on this form should include the probable number of applications of the gage, or the length of time the gage should remain in use, before rechecking, as well as gaging dimensions. The card is then filed under the indicated date for reinspection. The person responsible for the rechecking of the gages need only remove from the file each morning the cards that are dated for that day and check the gages listed. In order to maintain a complete history of the gage, the record of actual gage usage can be recorded on the reverse side of the gage record card. The gage usage record is for. the protection and convenience of the persons responsible for the accuracy of the gages. It enables them to determine when gages should be submitted for a dimensional recheck. Gage recheck schedules on the gage record card, for new gages going into service, are estimations based on previous experience.

6.2.5.2 Time limit checking system. Another system of periodic gage inspection is the time limit checking system wherein rechecking is on a time basis. Gages are divided into classes; those requiring checking every 30, 60, or 90 days, respectively. In determining the classification, tolerances and frequency of use must be considered. This period may be changed as experience dictates; gages assigned to a 30-day class may be found to belong in the 60-day class, or vice versa. In cases of extremely high production, where gages are subject to severe wear, it may be necessary to subdivide certain classes into groups for more frequent rechecking.

6.2.5.3 Use of check or master setting gages. Check or master setting gages will not be applied to product. They are to be used on gages only. Inspectors should have access to these gages and make frequent use of them to insure the proper functioning of his inspection gages. Extreme care should be exercised when using check or master setting gages to avoid any possible injury to their gaging surfaces.

6.2.6 Damage control and correction.

6.2.6.1 Removal of nicks and burrs. The inspector should check gages for burrs resulting from machining and have them removed prior to application. Rough or careless handling of gages often will produce nicks and scratches, thereby damaging them. Gages should be handled with care and never piled on a bench or in a box. All burrs, nicks, and scratches should be removed only by competent personnel. Only a hard "Arkansas" stone will be used to remove them.

6.2.6.2 Control of wear. The principal cause of gage wear is the abrasive action between the gage and the part. Inspectors should not apply gages to parts from which dirt, machine chips, loose scale, or abrasive have not been removed. Failure to clean parts will damage gages and result in inaccurate inspection. Inspectors should become familiar with wear rates and characteristics. Application of such information will result in much greater useful life of gages. When doubt exists as to the extent of wear on a gage, it should be forwarded to the appropriate gage checking facility for a complete inspection. A gage wears most rapidly at the entering end. Wear at this point may be disregarded, or the gage can be corrected by removal of the worn portion provided that the remaining portion of the gage will still function satisfactorily.

6.2.6.3 Seizure and galling. Occasionally a gage will seize or gall in or on a component. This usually results from forcing the gage when applying it to a part. Care should be exercised to aline the gage with the part being inspected. Seizure is sometimes unavoidable when the component dimensions are close to the gage dimensions. The inspector should use extreme caution when this condition exists. When a gage is seized in a component, it should be removed by gently tapping with a soft object such as a brass rod or piece of wood. In case of extreme seizure, it may be necessary to apply heat locally to the gage or component to release by expansion. The amount of heat should not raise the temperature of either above 150° F., as higher temperatures may draw the temper of the gage and may cause warpage.

6.2.6.4 Inspection of dropped gages. Gages which have been dropped should be thoroughly inspected before using. If there is any doubt as to its condition, the gage should be sent to the appropriate gage checking facility for inspection and approval for use. A gage dropped on a concrete floor will be damaged. If possible, gaging operations should be made in a location where there is a wooden floor, wooden platform, or a linoleum floor covering. Use extreme care to avoid dropping of gages.

6.3 APPLICATION PROCEDURES. Procedures to be followed in the application of specific types of gages to product are specified in this section.

6.3.1 Forcing of gages. It is extremely important that the force or torque applied to "Go" gages should not be greater than that which can be easily exerted on the gage handle. Excessive force applied to "Go" gages will result in the acceptance of oversize products which should be rejected. Thread gages are precision equipment and should be used accordingly. Hand torque is adequate to insure proper inspection. Under no circumstances should

a wrench or lever be used to force a thread gage in or on a product. It is well to remember that all thread snap gages and pipe thread tri-roll gages are "comparators"; that is, they compare the dimensions of a setting plug gage with the dimensions of the product being inspected. The force applied to these gages when inspecting parts should in no case exceed, and preferably be less than, the force applied when setting the gages.

6.3.2 Method of applying snap gages. Snap gages will be applied with the gaging surfaces square with the surface to be gaged. A slow steady motion should be used when applying the snap gages to the component. Small cylindrical pieces should be rolled between the gaging surfaces of the snap gage. When large cylindrical pieces are gaged, the larger gaging surface should be placed in contact with the upper surface of the part and the lower gaging surface gently rocked over the lower surface.

6.3.3 Method of applying small plug gages. Small plug gages should be used with care, as rough and careless methods of application will result in broken gages.

6.3.4 Methods of applying thread gages.

6.3.4.1 Function of thread gages. The proper use of thread gages will ensure the in-

Figure 92. Proper method of inserting "Go" and "Not Go" thread plug gage.

terchangeability and assembly of mating threaded parts of any given size, pitch, and class. The use of both "Go" and "Not Go" thread gages is the most general, satisfactory means of assuring a product that will be within the specified limits of size.

6.3.4.2 "Go" thread plug gages. "Go" thread plug gages should check simultaneously as many elements as possible, therefore, the gage is designed to have a full form thread and to check pitch diameter, major diameter, thread angle, and lead. "Go" thread plug gages control the extent of the product tolerance in the direction of the limit of maximum-metal, and represent the minimum limit of internal threads. The gages should not be allowed to be used when worn beyond the product limit. The gage should enter the full threaded length of the product freely, with no more force than can be applied by the fingers (see fig. 92) ; force should never be applied as shown on figure 93. A "Go" thread plug gage should never be forced into a "Go" thread ring gage, and an adjustable "Go" thread ring or snap gage should never be set with either a working or inspection "Go" thread plug gage but with a proper setting plug.

6.3.4.3 "Not Go" thread plug gages. "Not Go" thread plug gages are made as nearly as practicable to check pitch diameter only. This is accomplished by reducing both the length of the thread flank and the length of the thread. The thread flank is shortened by removing a portion of the thread crest and by a greater width of relief at the thread root. "Not Go" thread plug gages control the extent of the product tolerance in the direction of the limit of minimum-metal and represent the maximum limit of internal threads. In use, "Not Go" gages should be applied as shown on figure 92 and should not enter the product in excess of the limitations contained in applicable thread specifications.

6.3.4.4 "Go" thread ring gages. "Go" thread ring gages, like "Go" thread plug gages, are designed to check as many elements as possible. They are used to check pitch diameter, minor diameter, thread angle and lead, control and extent of the product tolerance in the direction of the limit of maximum-metal, and

Figure 93. Improper method of inserting "Go" and "Not Go" thread plug gage.

represent the maximum limit of external threads. In use, "Go" thread ring gages should pass over the entire threaded portion of the product and with no more force than can normally be applied with the fingers.

6.3.4.5 "Not Go" thread ring gages. "Not Go" thread ring gage, like the "Not Go" thread plug gage, is made to check pitch diameter only. The length of the thread flank is reduced by increasing the minor diameter and the width of the thread relief at the major diameter. The "Not Go" thread ring gage controls the extent of the product tolerance in the direction of minimum-metal, and represents the minimum limit of external threads. In use, the product should not enter the gage in excess of the limitations contained in applicable thread specifications.

6.3.4.6 Roll thread snap gages. The roll thread snap gage (see fig. 78) affords a visual means of inspection which is both fast and accurate. Maximum and minimum limits are checked in one operation, thus reducing the number of gages that would otherwise be required. There is no interference of any consequence with the helix of a thread because the ribs on the rolls are annular and not helical. Thus a single gage can be used for either right- or left-hand threads, regardless of thread length. The roll thread snap gage may also be adjusted to any class of thread, that is, for class 1, 1A, 2, 2A, 3, or 3A and still maintain its accuracy. The "Go" rolls on the roll thread snap gage check lead, maximum pitch diameter, minor diameter, thread angle, and roundness. The "Not Go" rolls on the roll thread snap gage check minimum pitch diameter and uniformity of diameter from end to end. The rolls because of their design, are not generally subject to the accumulation of foreign matter. The entry and passage of the screw through the "Go" rolls are shown on figures 94 through 97. By holding the gage and screw as shown, the thumb can be used to aline the screw with the "Go" rolls. Proper alinement is necessary to produce accurate results. Accumulative lead errors in the length of engagement are checked by the multiple ribs on the "Go" rolls. The maximum pitch diameter is checked by the setting of the "Go" rolls at that measurement, and the

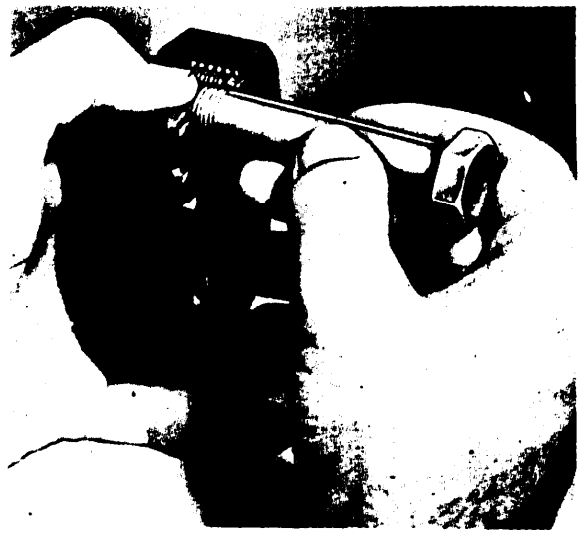

Figure 94. Aline bolt with "Go" rolls and lower into gag.. Block line on screw shows orientation of gage.

passing of the product through the full-thread-form ribs of the "Go" rolls shows up errors in thread depth, form, and angle. The product is then moved to the "Not Go" rolls which have only two adjacent ribs, thus avoiding all possible interference from lead errors of the part being inspected. The "Not Go" rolls are set to the minimum pitch diameter limit and check minimum pitch diameter and uniformity of diameter because the rolls are truncated at the major diameter and are cleared at the minor

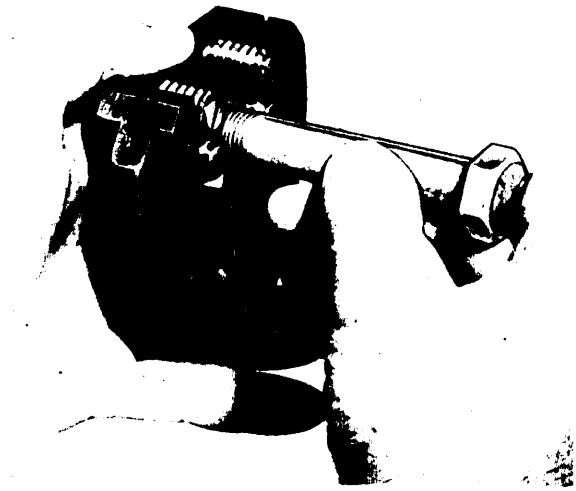

Figure 95. "Not Go" rolls stop bolt when it passes through "Go" rolls.

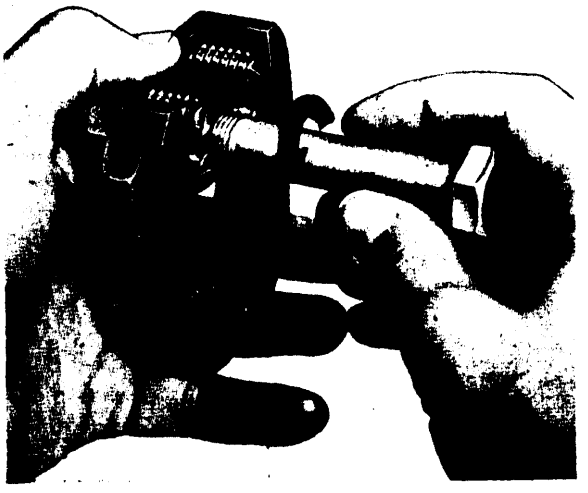

Figure 96. Bolt is turned ¼ turn at "Not Go" rolls to check for out-of-roundness. Note the new position of the black line on bolt.

diameter, leaving a narrow flank to contact or gage the product thread at the pitch diameter. Consequently, most of the effects of thread angle errors in the product are avoided. The product thread should not pass through the "Not Go" rolls; parts which do pass through should be gaged in accordance with standard "Not Go" gaging practices.

Figure 97. Raise bolt back through "Go*' rolls and check further for out-of-roundness.

The product is next given a quarter turn to check out-of-roundness, and if the pitch diameter is undersize at any point, the part will pass through the rolls and be rejected. Assuming that the screw is not found to be undersize at any point, it is passed back between the "Go" rolls for a further check of out-of-roundness. Should the diameters of the screw thus presented to the "Go" rolls be greater than the permissible maximum pitch diameter, the screw will not pass between the "Go" rolls, and is not acceptable. Screw threads are acceptable when the "Go" rolls pass over the thread with a force not in excess of the weight of the roll thread snap gage.

6.3.4.7 Standard taper threaded pipe gages. A standard set of taper threaded pipe gages (see figs. 58 and 70) consists of a taper-threaded plug gage and a taper-threaded ring gage. The plug gage has a gaging notch located a distance L_1 from the small end. The thickness of the ring gage is equal to L_1, so that when fitted to the plug gage both the gaging notch and the small end are flush with the faces of the ring. In checking an external thread, the working ring gage is screwed on the product handtight. The thread is within the permissible limits when the gaging face of the ring gage is not more than one turn, large or small, from being flush with the small end of the product thread. In checking internal threads, the working plug gage is screwed into the product hand-tight and is within the permissible limits when the gaging notch is not more than one turn large or small from being flush with the large end of the product thread. A tolerance of plus or minus 1 ½ turns is permitted when inspection gages are used.

MEANING OF TERMS, Ll, L2, L3.

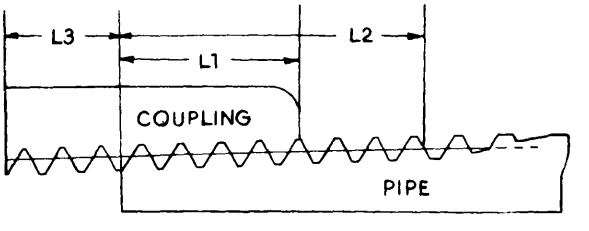

Figure 98. Assembled threaded pipe and coupling at handtight engagement, showing dimensions L_1, L_2, and L_3.

6.3.4.8 Aeronautical type taper threaded pipe ANPT gages. When it is necessary to hold the individual pipe thread elements more closely than is possible with the standard taper pipe thread gages, a gaging system involving a combination of specially designed gages comprised of the following can be used: Two taper threaded pipe plug gages, L_1, and L_3, (see fig. 58) and one taper plain pipe plug gage (see fig. 59) are used to check internal threads (tapped holes). One threaded pipe triroll gage (see fig. 73) and one taper plain pipe triroll gage (see fig. 74) are used to check external threads (pipe). Two taper threaded pipe ring gages and one taper plain ring gage may be substituted for the triroll gages when desired.

6.3.4.9 L_1, and L_3, taper threaded pipe plug gages. The L_1, and L_3, taper threaded pipe plug gages check the normal and effective length of internal pipe threads and check for the tolerance of plus or minus one turn (or thread) from a basic thread size. Three gaging steps are provided on the L_1 gage, basic, maximum, and minimum. The L_1 gaging member checks the normal length of engagement which would occur between mating parts when put together by hand.

The L_3, gaging member, the length of which is equal to L_1 plus three threads, and which has only four threads at the small end, checks the effective or usable length of the internal pipe thread. The L_1 gage is screwed into the internal thread of l the product handtight (see fig. 99) and the position of the gaging notch with relation to the face or reference point of the product is noted. The operation is repeated with the L_3 pipe thread plug gage (see fig. 100). The position of the gaging notch on the L_3 gage shall not vary more than ½ turn (or thread) from the position that was noted when the L_1 gage was used. For example: if the basic notch of the L_1 gage is ½ turn above the face

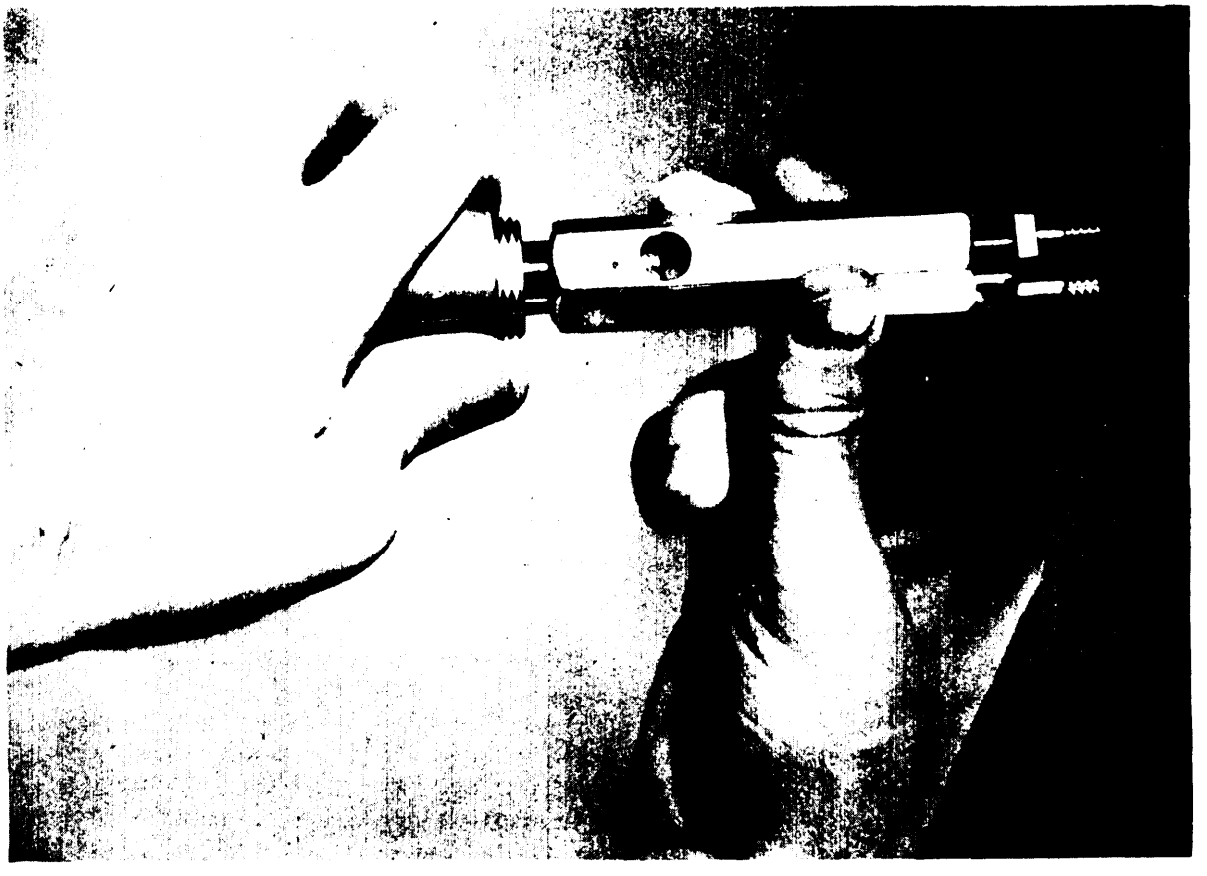

Figure 99. L_1 gage screwed into product. The gage's basic notch has stopped at the fitting's face.

Figure 100. Pipe fitting shown on figure 99 is next checked with the L_3 gage, and here stops with basic notch within ½ turn (thread) from the product face.

or reference point of the product, then the basic notch of the L_3 gage should also be ½ turn above the face or reference point of the product if the internal thread is correct. If the internal thread is not correct, the L_3 gage shall be within the permissible limits of ½ turn from this position, that is, ½ turn above or below the position previously noted with the L_1 gage.

NOTE: With respect to the use of the gage, the radial locations of the respective gaging notches are not important ; only the variation from the face of the product is considered, as mentioned above. However, when the basic notch is produced on the gage, the circumferential location should be such that the plane of the notch intersects the following thread flank at or near the pitch line.

These gages reveal taper errors, insufficient length of thread, and excessive truncation at the major diameter. Figure 98 shows a standard internal pipe thread. Note the position of the basic gaging notch of the L_1 plug gage in relation to the face of the product. Next note the position of the basic gaging notch on the L_3 plug gage which has been screwed into the same thread. The basic gaging notch of the L_1 gage is flush with the face of the product. The basic gaging notch of the L_3 gage is within ½ turn of the product face, thereby indicating that the product thread is acceptable.

6.3.4.10 Taper plain pipe plug gage. After the L_1 and L_3 taper threaded pipe plug gages are used, as specified, the taper plain pipe plug gage must be used to check the truncation of the threads at the minor diameter (see fig. 101). The permissible variations on the minor diameter, or thread truncation, of the product are indicated by notches or stepson the plug, namely, one turn either side of basic. There are six steps in all, arranged in pairs. one pair covers the allowable variation in truncation for a basic thread, one pair is for a minimum thread, and

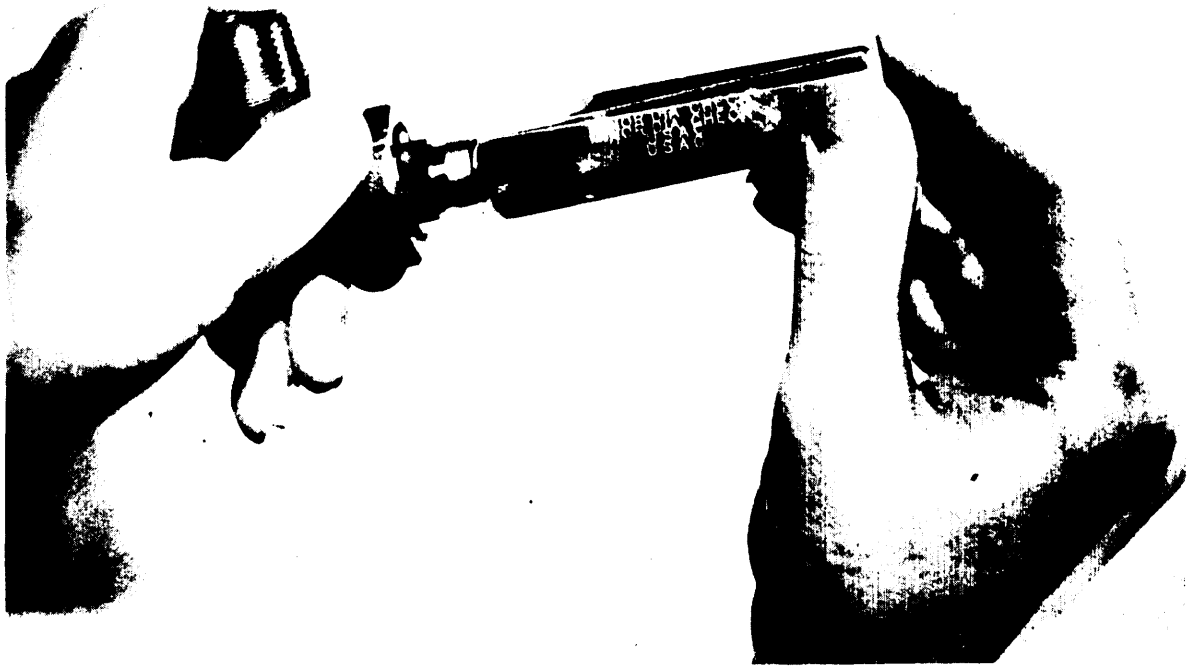

Figure 101. Taper plain plug gage is used next on product shown on flgures 99 and 100. Here it has stopped with basic notch at face of product. The fitting is acceptable.

one pair is for a maximum thread. In this manner, the minor diameter or truncation of the product is checked in relation to the thread size or pitch diameter as determined by the L_1 and L_3 plug gages. If the thread size of a product has been found to be basic by the L_1 and L_3 plug gages, then the face or reference point of the product must be between the pair of steps marked "basic" on the taper plain plug gage. Similarly if a thread size is maximum or minimum or at any intermediate position or thread size, which may be estimated, the appropriate steps are used. Errors in taper or roundness are indicated by excessive shake of the gage in the threaded hole and are cause for rejection (see fig. 102). The form of external pipe threads may be easily checked as they are readily accessible. Further inspection of internal pipe threads can be made by cutting a cross section from a sample thread, or by inspection of a cast of the thread (see fig. 103). Externally threaded parts or cross sections, and proof casts of internally threaded parts, may be checked with an approved type tool maker's microscope or optical projector.

6.3.4.11 Threaded pipe triroll gage. The t breaded pipe triroll gage checks the effective length of the external pipe thread for roundness, lead, size, angle, minor diameter, form of thread, and taper. These gages are used similarly to threaded pipe ring gages in that the threaded product is screwed into the gage under normal finger torque, until a perceptible resistance is encountered. DO NOT FORCE THE WORK INTO THE GAGE. The thread is then ready for gaging (see fig. 104). The tolerance of plus or minus one turn is determined by observing the position of the end of the thread in relation to the stepson the gage. The lowest in height of these steps represents the minimum acceptable thread size. The middle step is the basic or standard size of a threaded part. The highest step represents the maximum acceptable thread size of the product.

Figure 102. Excessive shake or play of taper plain pipe plug gage is cause for rejection of product.

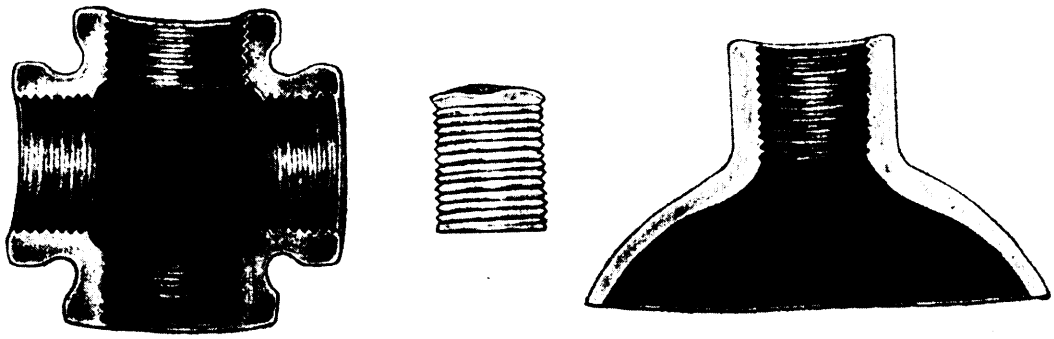

Figure 103. Two fittings cross-sectioned for inspection. Center object is proof cast.

The end of the threaded product should in no case extend beyond the lowest or highest gaging step. Thread form and taper are inspected visually by observing the contact made between the product and the rolls.

6.3.4.12 Taper plain triroll gage. After a part is checked with the threaded pipe triroll gage, as specified, the taper plain triroll gage is used to check the major diameter of external pipe threads for permissible truncation of the

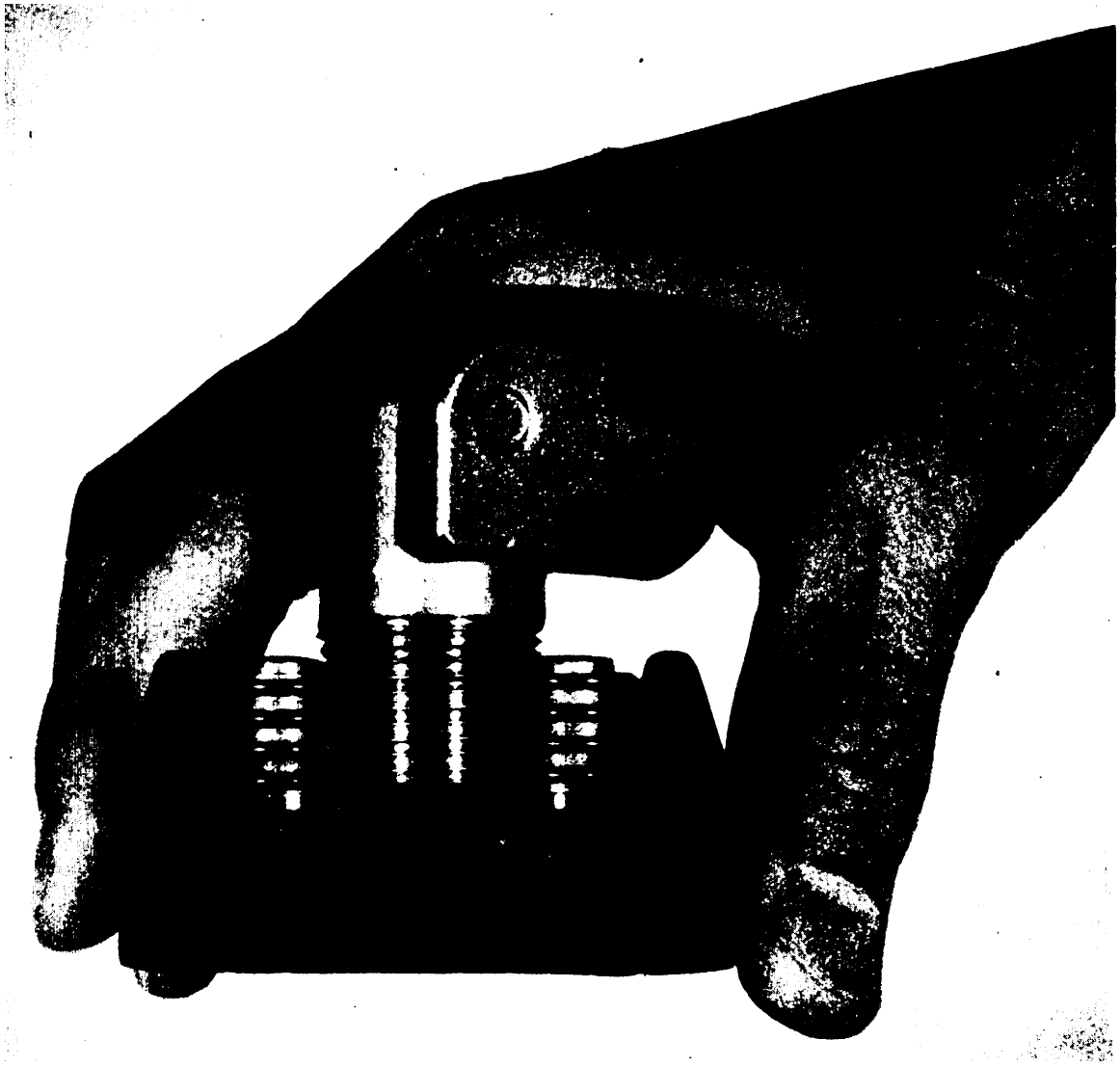

Figure 104. Fitting screwed into threaded pipe triroll gage. Small end of fitting is flush with basic stop.

thread crest, by checking the relation of the crest to the thread size or pitch diameter. The gage is slipped over the product until a perceptible resistance is encountered between the rolls of the gage and the major diameter of the product. DO NOT FORCE OR ROTATE. Simultaneous contact is made between the end of the product and the flush pin contact flange of the gage (see fig. 105). The variation of the major diameter, or thread crest truncation of the product, is transposed into longitudinal travel of the flush pin. The position of the gaging reference points located on the end of the flush pin, in relation to the steps on the hub at the rear of the taper plain triroll gage, indicates the amount of truncation. The three steps on the hub of the gage represent one turn each, and are identified as basic, maximum, and

minimum. The step on the end of the flush pin represents the allowable variation on the major diameter, or thread crest truncation. If the threaded pipe triroll gage indicates that the product's thread is basic, when measured as described, the basic step on the hub of the taper plain triroll gage is used to determine the size of the major diameter. The major diameter is within the specified tolerances for truncation when the basic step on the hub is either flush with or within the step of the flush pin. Similarly the maximum or minimum step is used when the thread is maximum or minimum. At any intermediate size it is necessary to estimate the proper position. Error in taper is indicated by excessive shake of the gage. For all practical purposes the error in taper may be measured by inserting thickness gages between the gage rolls and the major diameter of the product at the point of extreme gap. Thickness gages of the same size should be inserted at each roll to avoid canting.

6.3.4.13 Threaded pipe ring gages. When threaded pipe ring gages are used, it is recommended that two types be used. The L_2 ring gage should have the threads removed sufficiently to clear the major diameter of the product for a distance of L_1 minus pitch from the small end of the gage. The remaining threads should have a full profile and be truncated at their minor diameter an amount equal to the maximum specified truncation of the product, The L_1 ring gage, which has the threads truncated at their minor diameter an

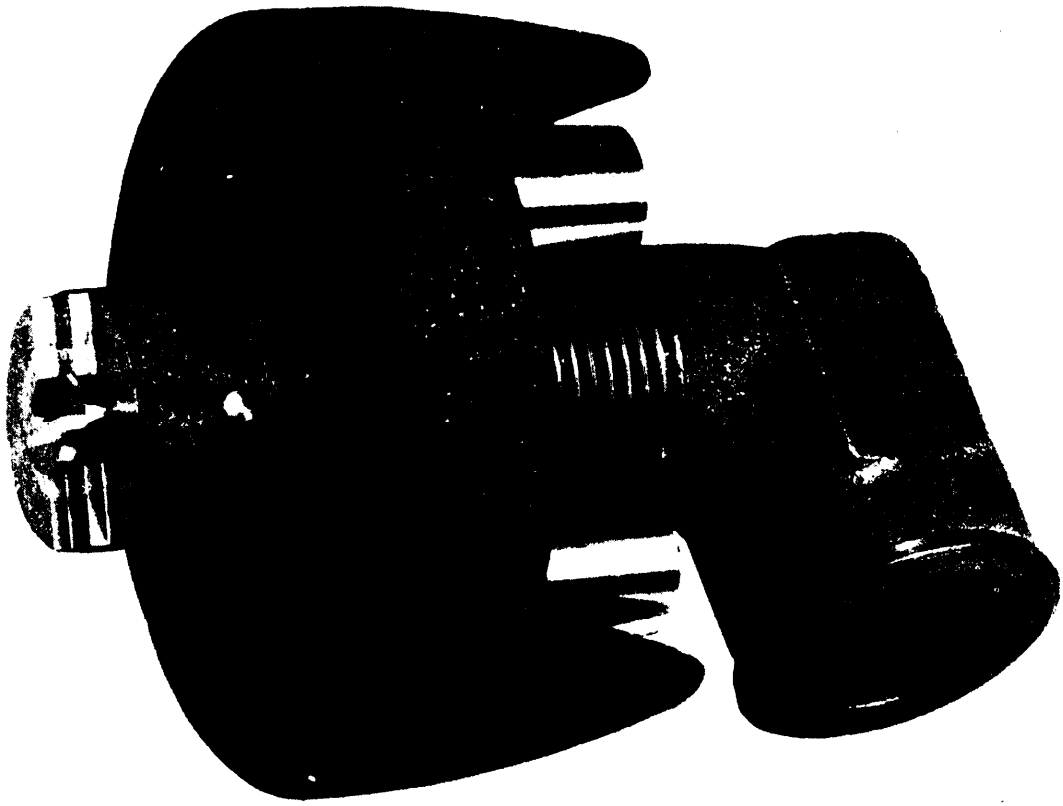

Figure 105. Taper plain triroll gage with fitting inserted. Flush pin shows fitting to be basic.

amount equal to 0.15 pitch should also be used. In checking the product, the L_2 ring gage is screwed tightly onto the product by hand. DO NOT FORCE. The position of the face at the small or cleared end of the ring, in relation to the end of the product, is noted. If the L_2 ring gage shows the product to be within the permissible tolerance of plus or minus one turn from the end or reference point of the product, the operation is repeated with the L_1 ring gage. The relative position of the reference faces of the two gages must not vary more than ½ turn from the end of the product. Size and off-taper conditions are readily checked in this manner and such defects as are produced by excessive chamfer in the throat of the dies or chasers, worn die and chaser threads, and thread angle errors will be revealed within the limits of combination pipe thread ring gaging.

6.3.4.14 Taper plain ring gages. When using taper plain ring gages to check the major diameter. over the effective length L_2 of the external pipe threads, for size and permissible truncation of the thread crest, in relation to the thread size or pitch diameter, it is recommended that the ring gage incorporate six gaging notches or steps arranged in pairs (see fig. 71). One pair is to cover the allowable variation in truncation for a basic thread; one pair for a minimum thread, and one pair for a maximum thread. When the threaded pipe triroll gage or threaded pipe ring gages indicate the thread size to be basic, then only the basic gaging notches or steps on the plain taper ring gage shall be used in determining the allowable variation in major diameter. The small end of the threaded product shall be within these two steps when tile plain taper ring gage is slipped tightly over the product. DO NOT FORCE. Similarly the appropriate steps shall be used when the thread size is maximum or minimum, or at any intermediate position or size which may be estimated. Errors in taper and roundness are indicated by excessive shake or play.

6.3.4.15 Special threaded pipe gaging conditions. Should drawings and other data furnished by the procuring agency require external and internal pipe threads to be chamfered or countersunk in excess of the dimensions shown in specifications, the thread size shall be determined by using the end of the chamfer or bottom of the countersink as the reference point, which shall be considered as being the intersection of the chamfer cone and the pitch cone of the thread, instead of from the end of the pipe, fitting or coupling.

6.3.4.16 Check or master setting thread plug gages. These are thread plug gages which are used to set adjustable thread ring gages, thread snap gages, and other thread comparators. They are of two standard designs designated as basic-form setting plugs and truncated setting plugs. The basic form setting plug (see fig. 106) has a major diameter corresponding to the basic or maximum major diameter of the screw. The truncated setting plug has the crest of the thread truncated for approximately ½ its length. Commercial Standard CS8 (latest edition) shows a setting plug which has approximately one-half of the threads truncated and the other half full form.

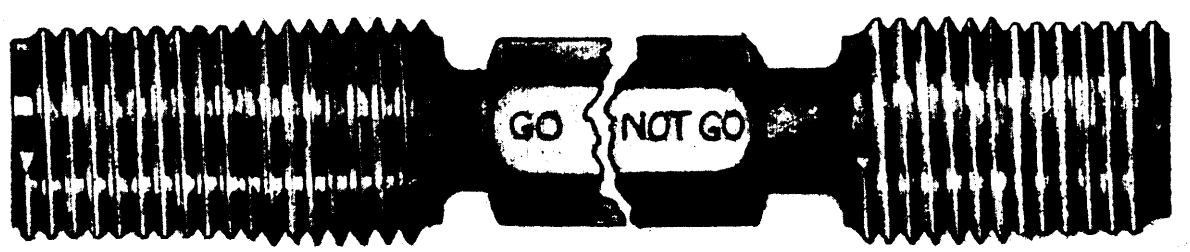

Figure 106. Setting plug gage having full and truncated threads on each member.

The truncated threads control the pitch diameter of the ring gage, and the full form threads the thread form and clearance at the major diameter. Ring gages should be adjusted to fit the basic form portion of the setting plug and then tried on the truncated portion. There should be only a slight difference in the fit. The presence of shake or play on the truncated portion indicates inadequate clearance at the root of the ring thread. Basic form setting plugs are required only for setting roll thread snap gages.

6.3.4.17 Check or setting taper threaded pipe plug gages. These are taper-threaded plug and taper plain plug gages. The taper pipe thread setting plug gages (see fig. 107) have a thread length of L_1 and have one gaging notch located a distance of L_1 from the small end of the gage. They are used for checking pipe thread ring gages for size and the setting of threaded pipe triroll gages. When the L_1 ring gage is assembled handtight, the gaging face should be flush with the small end of the plug and the opposite face flush with the gaging notch on the plug. The L_2 ring gage should assemble handtight with the gaging face at the small end of the ring flush with the small end of the plug. A threaded pipe triroll gage is set correctly when the small end of the plug is flush with the basic step on the triroll frame when assembled handtight (see fig. 108). The taper plain setting pipe thread gages (see fig. 109) have no gaging notches, the face at the small end being the gaging surface. They are used for checking taper plain pipe thread ring gages and setting taper plain pipe thread triroll gages. When the plug and ring are assembled handtight, the small end of the plug should be flush with the basic gaging step) on the ring gage. The taper plain triroll gage is set correctly when the gaging end of the flush pin is flush with the basic step on the hub of the gage frame, when assembled handtight with the setting plug gage (see fig. 110).

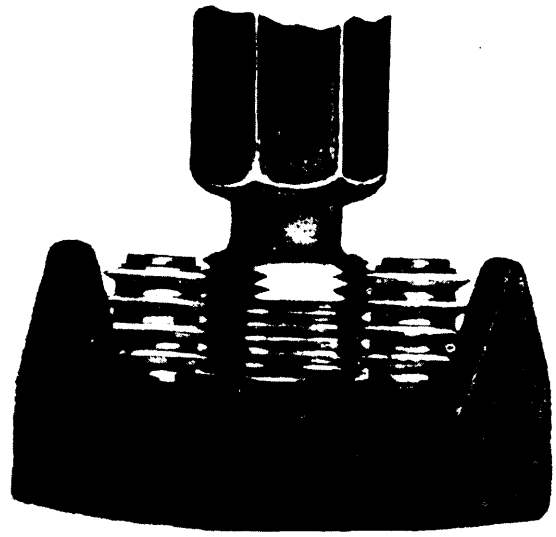

Figure 108. Threaded pipe triroll gage set correctly.

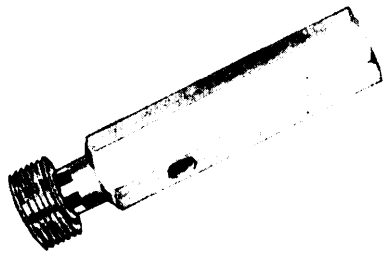

Figure 107. Taper pipe thread seetting plug gage.

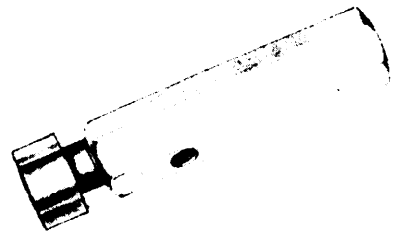

Figure 109. Taper plain setting pipe threaded plug gage.

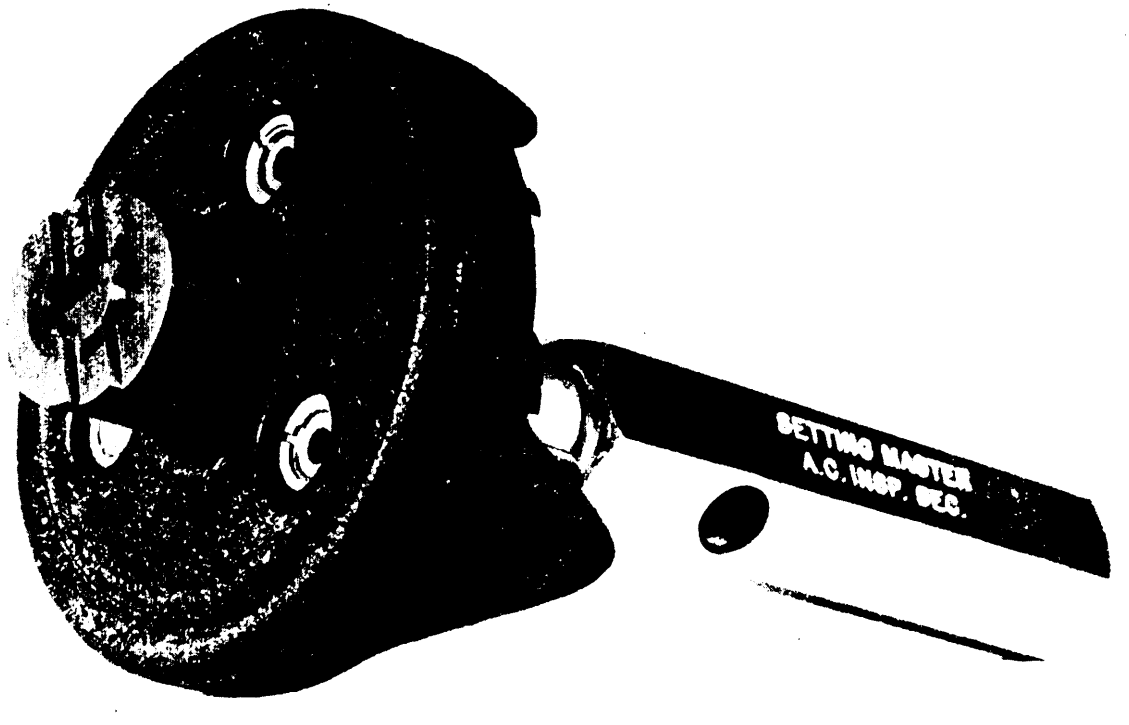

Figure 110. Taper plain triroll gage.

7

SURFACE ROUGHNESS MEASUREMENT

7.1 GENERAL This section describes instruments and methods applicable to the measurement of the roughness or surface finish of solid surfaces.

7.1.1 Definition. Surface roughness is the relatively finely spaced irregularities on the surface of an object. On surfaces produced by machining and abrasive operations, the irregularities produced by the cutting action of tool edges and abrasive grains are roughness. Surface roughness should not be confused with waviness, as surface roughness is the finer of the two and may be considered as being superposed on a wavy surface.

7.1.2 Standardization. Military Standard, MIL–STD–10, Surface Roughness Waviness and Lay, establishes a uniform method for indicating on drawings the surface roughness, waviness, and lay of surfaces. It is in agreement with the American Standard ASA B46.1—1947 and other National standards.

7.1.3 Application to gages. The surface roughness on gaging surfaces affects the wear life of a gage. The rougher the gaging surfaces, the faster the wear on a gage in service. The surface roughness of all gaging surfaces must be controlled if the usual gage 'life expectancy is to be obtained.

7.2 SURFACE ROUGHNESS MEASUREMENT

7.2.1 Tracer type instruments. Numerous methods have been devised for measuring surface roughness. For practical purposes, instruments of the tracer type which employ a point or stylus to explore the irregularities and record them greatly magnified are generally used. The two such instruments most extensively used are the profilometer and the brush surface analyzer.

7.2.2 Profilometer. The profilometer with mototrace (see fig. 111) has a tracer unit which is drawn over the surface and the movement of the tracer point perpendicular to the surface is magnified electrically by an amplifier, The roughness value is read in microinches of root mean square average roughness on a meter mounted on the instrument panel.

7.2.2.1 Tracer unit. The tracer unit (see fig. 112) is small enough to be held between the fingers and moved over a surface by hand. However, provision has been made for attaching a stiff arm which is a handle extending from the rear of the tracer to facilitate hand operation. A linkarm connects with the mototrace when automatic tracing is used. The tracer contains two hard polished metal skids which support the tracer on the surface being traced and establish a reference plane from which the deviations are measured. The tracer point consists of a small shaft with a diamond tipped point (0.0005-inch radius) which extends below the two skids sufficiently to contact the surface of the work with a very light pressure. No adjustment is needed on the latest model profilometer but the proper skids must be used. Older model tracers are equipped with a micrometer adjustment knob by which the tracer point can be raised or lowered, thereby regulating the position of the diamond point with respect to the skids and also the pressure between the diamond and the working surface.

To permit the measurement of various contours, three interchangeable skid mounts (see fig. 112) are furnished differing in size, shape, and center distance. The largest skid mount is for surfaces ¾ inch outside diameter to flat, and the smallest mount for surfaces ⅛ to ½ inch outside diameter only.

7.2.2.2 Microinch meter. Surface roughness measurements are read directly from the microinch meter (see fig, 113) in units of micoinches (0.000001 inch), average roughness (r. m. s.). Because of the several stages of

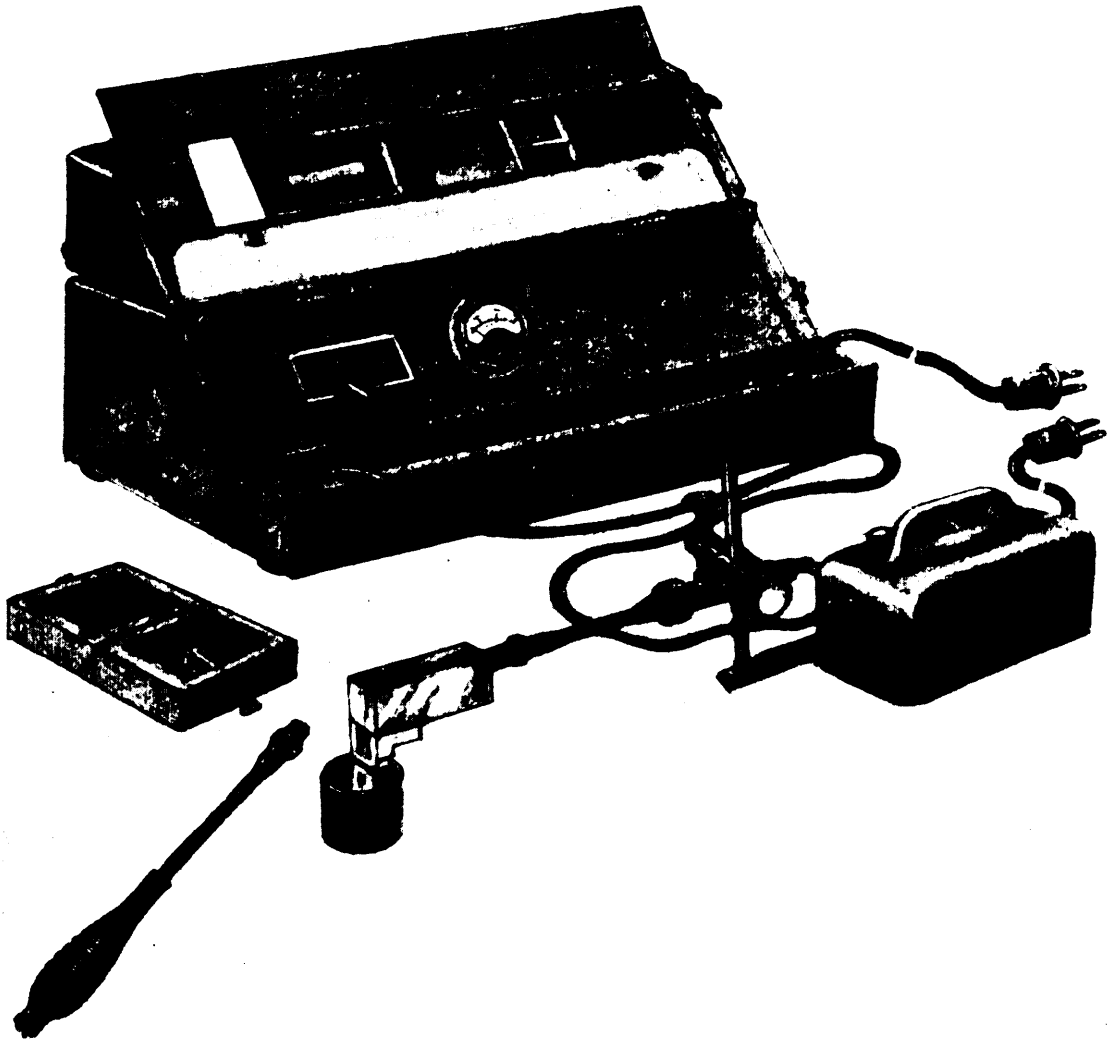

Figure 111. Profilometer with mototrace.

amplification with which the profilometer is equipped, as indicated by the scale-selector switch, the microinch meter is provided with two scales, the upper scale reading 0 to 30 and the lower scale reading from 0 to 10. The meter scale used, and the way in which it is read, is determined by the setting of the scale-selector switch. The setting of the scale-selector corre-spends to the maximum reading of the scale on the meter. When the scale-selector is set to 3, 30, or 300 the top scale only on the meter is read; when the scale-selector is set to 10, 100 or 1000 the bottom scale only on the meter is read. For example, if the scale-selector is set at 3, the top scale on the meter is read and the values are 1, 2, and 3; if the scale-selector is set at 30, the values on the top meter scale are 10, 20, and 30; and if the scale-selector is set at 300, the values on the top meter scale are 100, 200, and 300. If the scale-selector is set at 10, the values on the lower meter scale are 2, 4, 6, 8, and 10; if the scale-selector is set at 100, the values on the lower meter scale are 20, 40, 60, 80, and 100; and if the scale-selector is set at 1000, the values on the lower meter scale are 200, 400, 600, 800, and 1,000.

7.2.2.3 Mototrace. The mototrace is a mechanical means of moving the profilometer tracer over a selected distance at a uniform rate of travel. It permits more accurate and con-

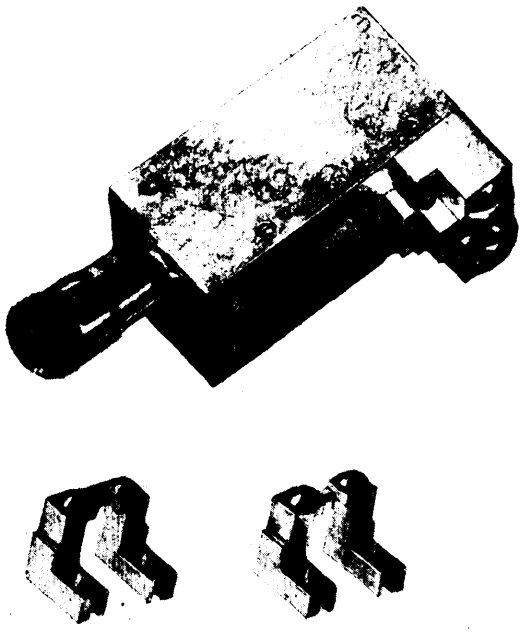

Figure 112. Tracer unit with interchangeable skid mounts.

sistent measurements on very smooth surfaces and surfaces where only a very short stroke can be made. The mototrace enables greater efficiency when large numbers of similar parts are to be measured. The stroke of the mototrace is adjustable from 1/16 to 2 3/4 inches by the movement of two thumbscrews on top of the case.

7.2.2.4 Glass roughness specimen. A glass roughness specimen of a known roughness is furnished with each profilometer (see fig. 114). This is used to test the condition of the tracer and profilometer before use. When the tracer is moved back and forth over the glass, the meter should indicate the value that is marked on the back of the glass specimen.

7.2.2.5 Interpretation of meter readings. The reading of the profilometer meter is in microinches of average roughness (r. m. s.). If the specifications for a part call for a finish not rougher than 20 microinches (r. m. s.) and the reading obtained is 25, the part is not acceptable. Likewise, if a minimum limit of 10 microinches (r. m. s.) has been specified, a reading of 7 indicates that the part is too smooth. In most cases it will be found that

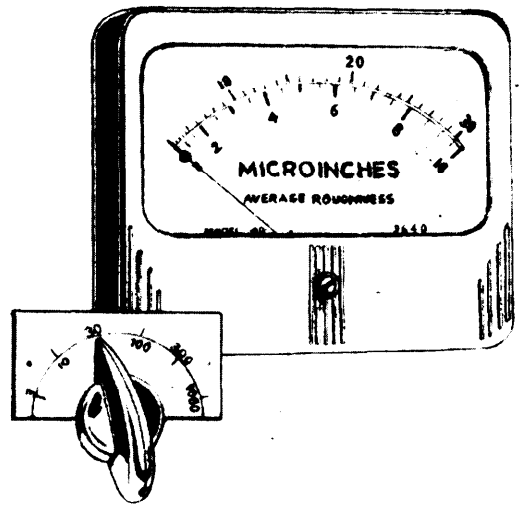

Figure 113. Microinch meter and scale-selector switch.

the roughness of a part varies from point to point along the surface. Generally when an appreciable portion of the surface is rougher than specified, the part is rejected. This variation is generally caused by variations in the finishing process and it is the custom to consider the extreme readings for purposes of acceptance or rejection. However, high readings of short duration are generally ignored and only sustained values considered. When using the mototrace on short strokes, the meter will be observed to "kick" occasionally at the point of stroke reversal. These kicks do not occur at every reversal, but are merely transient phenomena and should be ignored. By disregarding these irregular fluctuations of the meter, it will be seen that the meter follows, for the most part, a regular pattern which repeats between each reversal of the stroke. The reading indicated by this pattern should be noted. The

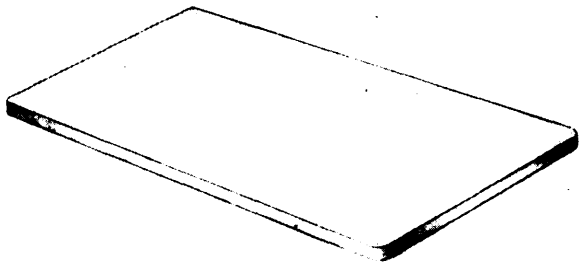

Figure 114. Glass roughness specimen.

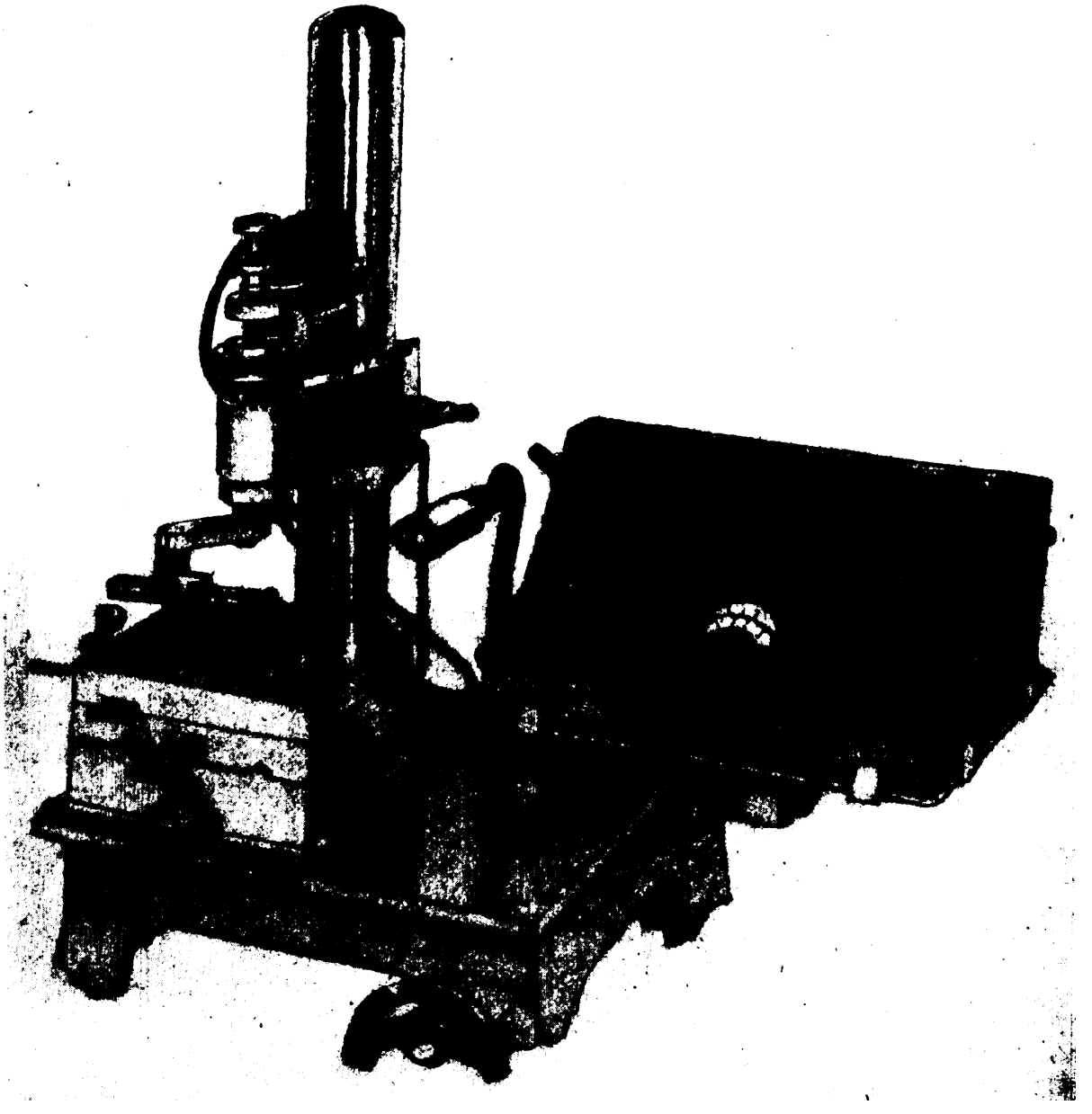

Figure 115. Proniometer rotary pilotor.

tracer should always be moved across the surface pattern of the part in the direction that produces the roughest or highest reading.

7.2.2.6 Using the profilometer. To use the profilometer it is only necessary to plug into a power line of appropriate voltage and frequency, turn on the switch and allow about 5 minutes for warm up, mount the proper skid mount for the surface to be traced, check on the glass roughness specimen, and proceed to take measurements. However, to obtain the most accurate results; the following points should be observed:

7.2.2.6.1 Set-up. The profilometer should be set up on a sturdy work bench and located as far as possible from vibrating or reciprocating machinery. Connection should not be made to power lines supplying heavy induction

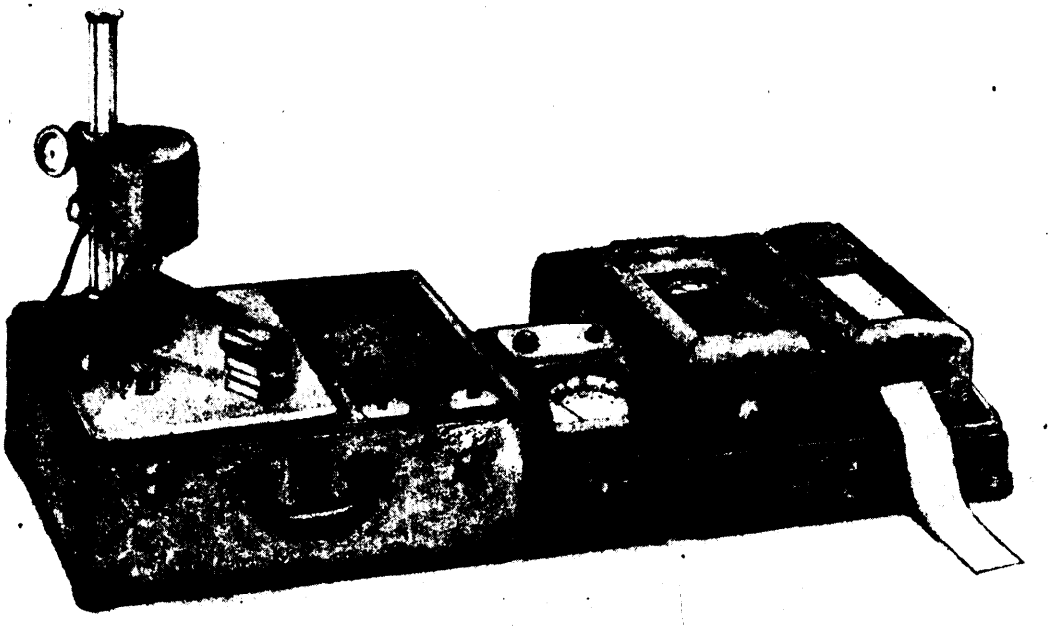

Figure 116. Brush surface analyzer.

equipment, such as induction furnaces and induction motors which are frequently started and stopped. For particularly accurate measurement of very smooth surfaces, it will be necessary to provide a surface plate supported with rubber mounting on the work bench to dampen any vibration that might be present. The profilometer can be placed immediately behind the surface plate and the plate used only for holding the work.

7.2.2.6.2 Condition of the work. The surface to be traced should be clean and free from foreign particles such as dust, metal shavings, and abrasive compounds. Excessive oil or grease should be wiped from the surface and great care taken that oil does not penetrate the tracer and gum up the moving parts. A slight film of oil on the part, however, is not objectionable and may cause the tracer to move more smoothly.

7.2.2.6.3 Holding the work. Appropriate means for holding the work steady, and maintaining the surface to be measured parallel to the top of the bench or surface plate should be available. The average part is heavy enough to stay in position while the tracer is being moved across the surface. On lighter or round parts where there is a tendency to move or roll, small dabs of modeling clay may be used to hold the work on the surface plate. A small tool maker's vise is ideal for holding small irregularly shaped parts.

7.2.2.7 Profilometer rotary pilotor. The profilometer rotary pilotor (see fig. 115) is a power driven instrument designed to provide the tracing motion for measuring the surface roughness of circular and cylindrical surfaces. It is used in conjunction with a standard profilometer and a suitable tracer. By appropriate mounting of the tracer on a rotatable adjustable arm either inside or outside diameters can be traced. It is adapted particularly for tracing the arc of an inner or outer ball-bearing race groove, and for tracing the surface of a ball. It is readily set up, however, for use on a great variety of surfaces which have a cylindrical or circular shape and require a rotary tracing motion for surface roughness measurements.

7.2.3 Brush surface analyzer. The brush surf ace analyzer (see fig. 116) is an instrument designed for the exploration and recording of

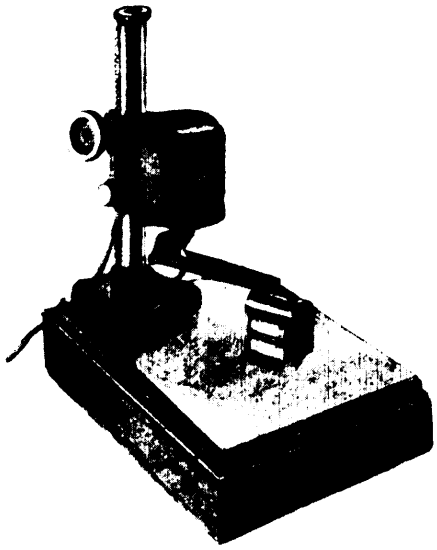

Figure 117. Pick-up arm.

surface contours of metals, glass, wire, plastics, paper, plated and painted surfaces, and tool cutting edges. It is similar in principle to the profilometer, inasmuch as it also employs the tracer method. It consists of four principal parts: The motor driven pick-up arm, the calibrating amplifier, the direct inking oscillograph, and the root mean square meter for visual indication in microinches of average roughness.

7.2.3.1 Pick-up arm. The pick-up arm (see fig. 117) contains a piezoelectric crystal or magnetic element, housed in the outer end which is connected through a lever system to a diamond point stylus located at the extreme tip of the pick-up arm. Directly behind the stylus is an adjustable positioning shoe. This shoe is of such design and size that it rests upon a relatively large surface, bearing the entire free weight of the arm and establishing a zero reference level from which the stylus measures departures. The pick-up arm cannot be operated by hand; it must be moved by the drive head. The trace of the diamond stylus is always parallel to the path of motion of the reciprocating drive shaft. This permits the exploration of recessed or curved surfaces that are otherwise impractical to analyze. The pick-up arm normally supplied has a diamond point with a radius of 0.0005 inch which is suitable for normal work having finishes from 1 to 100 microinches (r. m. s.). Other pick-ups for special applications are available. There is also a drive head and pick-up arm available for measuring rougher surfaces to 3,000 microinches.

7.2.3.2 Surface plate. In order to provide a working surface isolated from extraneous vibrations, a rubber shock mounted surface plate is provided, upon which the drive head stand and specimen under test may be placed. The surface plate is 10 by 14 inches and weighs 35 pounds. The rubber mounted feet are capable of supporting specimens up to about 30 pounds.

7.2.3.3 Drive head. The drive head consists of a 110 volt, 60 cycle motor and gear train enclosed in an aluminum housing. The motor drives a cam, which in turning, causes a spring loaded vertical shaft extending through the bottom of the housing to execute a reciprocal motion of 1/16 inch in a horizontal plane. To this shaft. is fastened a yoke which holds the pick-up arm. One complete cycle of motion requires 10 seconds. corresponding to a tracing speed of 0.0125 inches per second. The position of the pick-up at any instant relative to its front and back positions is indicated by a dial on the front of the housing. The drive unit is mounted on a tripod stand and plated shaft. The head can be swung horizontally, while a rack and pinion assembly permits vertical adjustments. A knurled knob permits clamping of the drive unit in any position.

7.2.3.4 Amplifier. The amplifier (see fig. 118) greatly magnifies the small electrical impulses generated by the piezoelectric crystal contained in the pick-up and delivers them to either the oscillograph pen rotor or the r. m. s. meter. It has a six-step attenuator or sensitivity control for different degrees of roughness of the analyzed surface, while the "gain control" provides a fine adjustment of the amplification. The calibrating voltmeter, in conjunction with

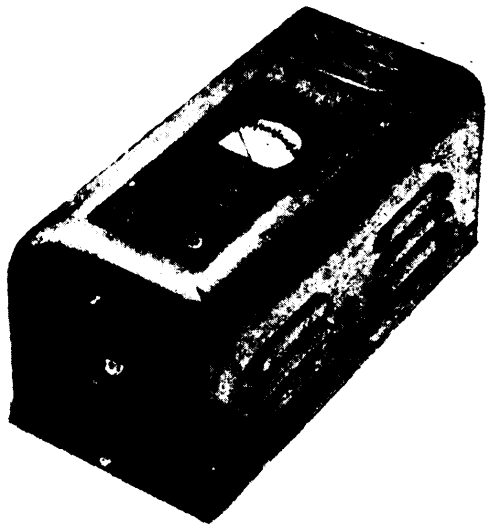

Figure 118. Amplifier.

the calibration voltage control, provides a means for accurately correlating a given oscillograph pen deflection with the corresponding input voltage.

7.2.3.5 Direct inking oscillograph. The direct inking oscillograph (see fig. 119), records the amplifier output on a moving strip chart, making a graphic record of the profile of surface irregularities of the specimen under test. It is made up of a crystal or magnetic pen motor with a 3-inch nickel pen and inkwell, and a chart drive mechanism. The latter is a motor driven arrangement for moving the chart paper under the point of the pen. A selective gear train gives a choice of three paper speeds of 5, 25, and 125 millimeters per second, corersponding approximately to ⅕, 1, and 5 inches per second. Choice of these speeds is made by a small knob at the right of the oscillograph. The knob all the way in gives slow speed, halfway out gives medium speed, and all the way out gives high speed. The oscillograph case is provided with a hinged cover window which may be opened to allow the user to make notations on the chart.

7.2.3.6 Interpreting the oscillograph chart. The dark band in the lower portion of the chart is the trace resulting from the calibration procedure and shows the width properly adjusted to 10 millimeters overall. The remainder of the chart represents the trace of the surface of a ground specimen, with the attenuator set on the 0.01 tap, and the chart speed on intermediate setting. With the instrument properly calibrated, each millimeter (small division) of the chart across the width of the paper represents a multiple of 10 microinches, as indicated in the following table:

With the attenuator set on tap	Each small division of chart paper represents
0.001	1 microinch (0.000001 inch)
0.01	10 microinches (0.000010 inch)
0.1	100 microinches (0.000100 inch)
1.0	1000 microinches (0.001000 inch)

In the example given, it will be noted that the largest deflection to the right of the centerline is about 10 millimeters while the largest peak at the left is 7.5 or 17.5 millimeters overall. This corresponds to a maximum roughness of 10 by 17.5 or 175 microinches (0.000175 inch) since the attenuator was on the tap where 1 millimeter equals 10 microinches. Viewing the chart paper at the end of the oscillograph from which it emerges, deflections to the left of the center-

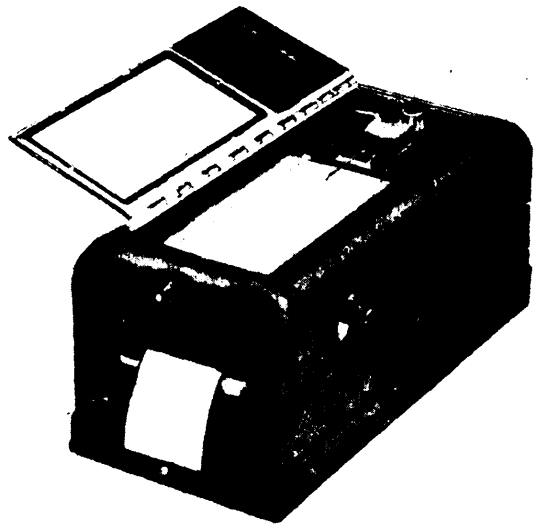

Figure 119. Direct inking oscillograph.

line indicate peaks above the mean surface; deviations to the right represent valleys. In addition to the depths of surface irregularities, the chart shows other microscopic surface features such as width, spacing, and contour. Spacing or width of irregularities can be calculated from the chart speed. At low speed each longitudinal chart division represents approximately 0.0125 inch; at second or intermediate speed each division represents 0.0025 inch: at high speed 0.0005 inch. These are several possible ways of evaluating a surface by means of a chart trace. One is the use of actual maximum heights or depths of peaks and valleys, as read directly from the chart. For many applications, a figure representing the average surface roughness is desirable. This can be obtained by use of the r. m. s. meter or it may be computed from a large number, such as 100, equally spaced readings on the chart.

7.2.3.7 Root mean square meter. The root mean square meter (see fig. 120) is a device for use in conjunction with the surface analyzer for giving a quick, visual indication of average surface roughness. It may be quickly inserted into the standard set-up and may be used either along with the chart recording, or separately. Located on top of the meter chassis are two controls, one marked "meter setting" which is also the "off-on" switch, and a button marked "press for 3 scale", which increases the sensitivity of the meter 3 ⅓ times. To place the meter in operation after the proper connections have been made and the analyzer calibrated, the same as if the chart only were to be used, turn the meter on, press the "calibrate" button on the amplifier, and adjust the "meter setting" control on top of the meter chassis until the meter needle indicates 3.5 (red line on face). The meter is then calibrated. Adjust the attenuator setting to give a good readable deflection as the pick-up arm moves over the surface being analyzed. With the attenuator on the 0.001 tap, the upper scale on the meter reads directly in microinches of average roughness (r. m. s.), a full scale deflection corresponding to 10 microinches (r. m. s.). For the 0.01 tap, multiply the upper scale readings by 10, for the 0.1 tap multiply by 100, and for the 1.0 tap multiply by 1000. By pressing the button marked "press for 3 scale" the bottom (green) scale is read. In this case, a full scale meter deflection corresponds to: 3 microinches (r. m. s.) with attenuator set on 0.001 tap, 30 microinches (r. m. s.) with attenuator set on 0.01 tap, 300 mimoinches (r. m. s.) with attenuator set on 0.1 tap, and 3000 microinches (r. m. s.) with attenuator set on 1.0 tap.

7.2.3.8 Glass calibration standard. Gradual changes in amplifier or pick-up arm characteristics and general aging may make necessary from time to time a slight revision of the supplied calibration voltage (marked on the inside cover of the pick-up arm box). This calibration may be corrected by means of the glass calibration standard furnished with the instrument (see fig. 121.) This glass standard has two precision scratches on its surface, located approximately as indicated by two white lines on a black background. There is one deep and one shallow scratch (approximately 100 and 10 microinches, respectively), the correct depths of which are indicated opposite the respective background lines. With the instrument set up and calibrated properly, the tracer is allowed to traverse the deep scratch several times at right angles. The total deflection on the chart should equal the given depth of the scratch. If there is a difference between the actual and recorded scratch depths, proper ad-

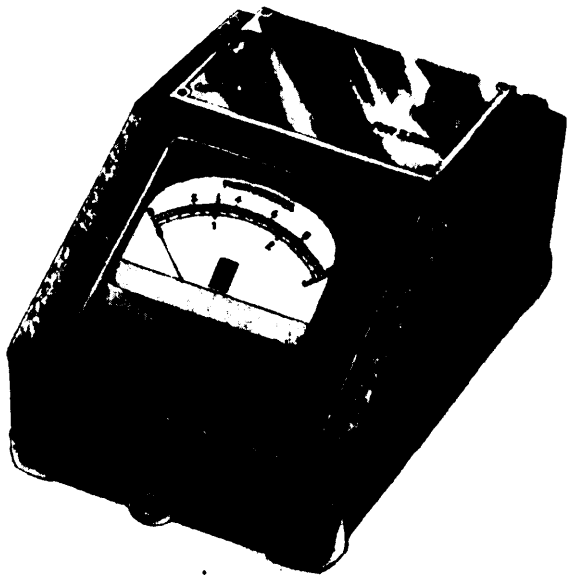

Figure 120. Root mean square meter.

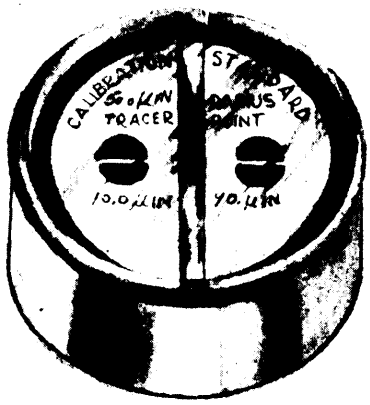

Figure 121. Glass calibration standard.

justments should be made until the actual depth is recorded. Occasionally the tracer should be run over the shallow scratch to check the condition of the diamond point. The depth of the shallow scratch should not differ more than 2 microinches from the depth specified on the standard when the tip of the diamond is in good condition. Do not calibrate the instrument with the shallow scratch. Each calibration standard is designed for use with a specified radius of tracer point and is so marked. Do not use for any other radius.

7.2.3.9 Using the brush surface analyzer. The operator should follow in detail the complete operating instructions furnished with each analyzer in order to obtain best results. In general, the "set-up" and condition of the work are the same as specified for the profilometer (see 7.2.2.6) but the adjustment for contact pressure is entirely different. However, the following points should be observed:

a. Never allow the pick-up arm to be heated above 120° F. Temperatures above this will permanently injure a crystal element.

b. When handling the pick-up arm or leaving it set for use, be careful not to bump the diamond point against a hard surface or leave it where it may swing against any object.

c. When leaving the analyzer set up for use, turn the attenuator to 1, 10, or 100 to prevent large disturbances of the pick-up arm from overloading the oscillograph or amplifier.

d. Never check hot surfaces, as this may soften the cement holding the diamond point in the pick-up arm.

7.2.4 Surface roughness comparator blocks. While surface roughness may be measured directly by the brush surface analyzer and profilometer, a quick, practical method of checking the rougher, noncritical surfaces where visual and tactual comparison is sufficient, is by the use of surface roughness comparator blocks (see fig. 122). These blocks are furnished in sets of varying numbers and each small steel block, or replica, represents a particular type of surface finish such as grind, turn, shape, mill, lap, and polish. The degree of roughness is marked on each block in microinches (r. m. s.). In use, the piece to be inspected is compared by feel and sight with the appropriate block. Emphasis should be placed on feel rather than sight, as visual inspection is not reliable because of differences in material, contour, and manner of machining.

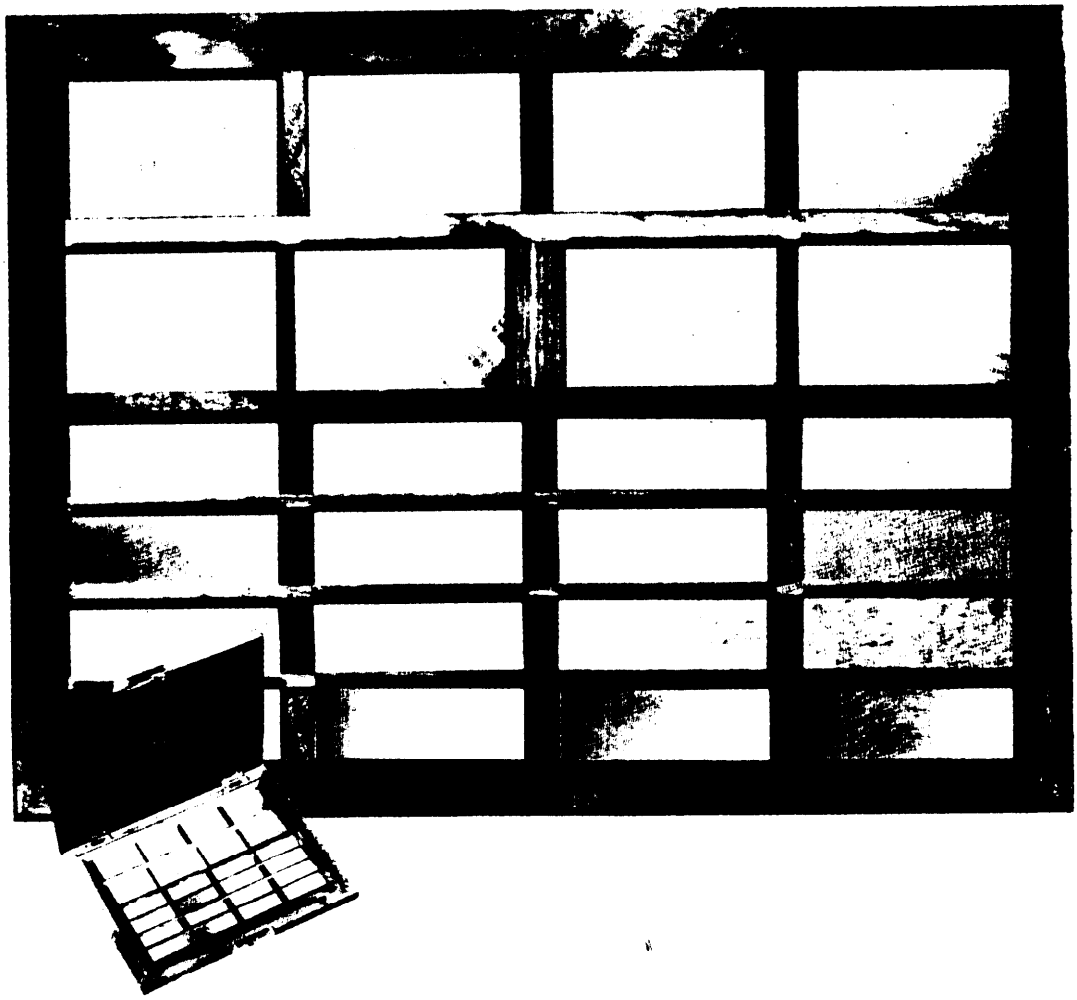

Figure 122. Surface roughness comparator blocks.

8

GAGE INSPECTION METHODS

8.1 GENERAL

8.1.1 Purpose. This section is intended for the use of gage inspectors in the gage laboratories and other gage inspection establishments of the Armed Services.

8.1.2 Scope. This section relates largely to tile application to precision measuring equipment (see sec. 4) to the inspection of gages. Included within its scope are instructions with regard to laboratory conditions, general gage inspection, care and usc of inspection tools, and care and use of precision measuring instruments. Detailed methods are specified for inspecting various types of gages and calibrating precision measuring equipment.

8.1.3 Arrangement. The section has been arranged in ascending order of difficulty. The first port ions are largely elementary and are intended primarily for the use of comparatively inexperienced gage inspectors. However, the information in the first portion should not be neglected by experienced inspectors. The later portions contain formulas and methods which should be of value to experienced as well as inexperienced inspectors. It is important that gage inspectors study the complete text on methods of inspecting any one type of gage instead of merely glancing at illustrations and formulas. Errors often result when inspectors use a method or formula without thoroughly understanding the manner in which it should be applied.

8.2 LABORATORY CONDITIONS

8.2.1 Laboratory temperatures. Whenever precision measurements are to be made, the temperature should constantly be kept as near to 68° F. as possible. Since most gages and measuring instruments are usually made of steel, they have practically the same coefficient of expansion, and, therefore, the requirement that the temperature remain constant is more important than the actual temperature. Variations in temperature can cause considerable error in precision measurements, especially when the complete inspection operation takes considerable time. Gages should be stored in a constant temperature room several hours before they are inspected in order to make certain that all portions of the gages attain the same temperature as the room. The amount of time required for this storage depends on the accuracy of the measurement to be made and upon the size of the gage or object to be measured.

8.2.2 Atmospheric conditions. The relative humidity of the atmosphere in a gage laboratory should preferably be kept under 50 percent in order to minimize the possibility of corrosion. In general, the air conditioning system of a laboratory should remain in operation during weekends, hollidays, or such other times as inspection operations are not in progress. This is both because the change in humidity may cause corrosion and because there are delays while instruments and gages reach the proper temperature on the day when the laboratory is reopened.

8.2.3 Cleanliness. Cleanliness is an important requirement for a good gage laboratory. Small particles of dirt cause serious errors in precision measurement and bring about excessive wear of precision instruments.

8.2.4 Lighting. Good lighting facilities are valuable, not only because they help gage inspectors make more accurate measurements, but also because they reduce eye strain and general fatigue.

8.2.5 Location of precision instruments. Precision instruments should not be placed where the direct rays of the sun can fall on them. The heat of the sun will cause expansion of instruments and subsequent contraction will set in when the instruments are no longer exposed to the rays.

8.3 GENERAL INSPECTION INSTRUCTIONS

8.3.1 Drawings. Gage inspectors should be provided with the applicable revisions of the gage drawings for the gages they are to inspect. When necessary or advisable, the drawing of the part for which the gage is intended should also be supplied.

8.3.2 Markings. After gages are inspected they must be marked for identification. Where there is any possibility that stamping will impair the accuracy of a gage, markings should always be put on with an electric pencil or by means of an etching or engraving process. As an example, the base of a locating gage should not be stamped because it has been found that the stresses set up in stamping tend to shift the position of the gaging members.

8.3.3 Gage records cards. In order to locate gages in storage and provide a method of recording historical data pertaining to each gage, it is necessary that some form of permanent record be prepared and maintained. Usually this is done by means of a gage record card. The format of this record, and the manner in which it is prepared, varies among the services. In general, however, the following information should be recorded:

a. Name of installation or establishment where the inspection and initial acceptance was conducted.

b. Identification number of the gage, including the letters used by the accepting laboratory.

c. Gage drawing and revision date or letter to which the gage was made.

d. Name of the item to which the gage is to apply.

e. Number and date of the drawing showing the item.

f. Any identifying letter, number or symbol for a particular part, shown on the item drawing, to which the gage applies.

g. Value of the gage as represented by the cost price.

h. Type of the gage.

i. Function of the gage.

j. Dimensions to be checked by the gage, as represented on the item drawing.

k. Actual gage dimensions as determined by the gage inspector.

1. Exact information as to the storage location of the gage.

m. Name of the gage inspector and the date upon which the gage was checked.

n. Any additional remarks deemed necessary.

8.3.4 Precautions.

8.3.4.1 In making precision measurements, inspectors should be careful not to handle gages and instruments any more than necessary, because the heat of the hands will cause expansion. All gages, tools, and instruments, as well as the inspector's hands should be clean at all times in order to prevent minute particles of dirt from interfering with proper measurement. Another reason for keeping the hands clean is that the natural acid content of the secretions of human hands tends to corrode precision surfaces.

8.3.4.2 When making computations, the number of figures carried should always be one greater than the number of figures desired in the answer. For example, in measuring a taper plug less than one-tenth in diameter, it is preferable to calculate to hundred thousandths, to use five place trigonometric tables, and to carry five decimal places in all numbers except the final answer. When a square root is to be extracted, it should first be decided how many significant figures are required in the answer. Then the quantity from which the square root is to be extracted must contain the same number of significant figures. Zeros immediately after the decimal place do not constitute significant figures. For example, the number 0.0036 contains only two significant figures.

8.3.4.3 When the dimensions of gages are very close to the specified limits, or when certain gages are needed very urgently, the gage inspector will often be required to exercise considerable judgment in deciding whether or not the gage should be accepted. An important factor to be considered in this connection is the direction of the tolerances given on the gage drawing. Generally no great harm will be dorm if the gage exceeds its limits in the direction of the product tolerance, but if the gage exceeds

the limits in the direction away from the tolerante, the error is serious. For example, a plain "Go" plug gage is given a plus tolerance. If the plus tolerance should be a little greater than that specified, the plug gage will tend to reject a few more components than a properly made plug gage. On the other hand if a plain "Go" plug gage should have a diameter less than nominal-in other words, if it is undersize, the gage could pass unsatisfactory components. For this reason, a "Go" plug gage slightly above the specified limits is sometimes accepted, but a "Go" plug gage below the specified limits should never be accepted. Gage inspectors should not accept gages which do not comply in all respects with the specifications of the drawing, unless approved by the supervisor.

8.3.5 Selecting the inspection method.

8.3.5.1 In selecting an inspection method, the actual use to which the gage is to be put, or the function of the dimension which is most important, should always be borne in mind. For example, if it is known that only the front portion of a plain plug gage is to engage a component, or if a plain plug gage is being checked for wear, the instrument used should have a rounded contact. This readily permits accurate measurements to be taken at a point very close to the front face of the gage. On the other hand, if the roundness of the plain plug gage is of primary importance, the gage should be checked by means of an instrument which has flat gaging members. This will permit the gage to be rotated between the measuring members at the same time that the measurement is being taken, thus giving an indication of the diameter of the gage at all points about its circumference.

8.3.5.2 The measuring instruments used should always be suitable for the tolerance specified on the gage drawings. The use of gaging instruments which are too inaccurate will result in errors or loss of time through the necessity of remeasurement. The use of gaging instruments which are too accurate will result in unnecessary expense and in loss of time. In general, the accuracy of the measuring instrument should be less than 20 percent of the tolerance on the gage being inspected. A measuring instrument which has an accuracy of 10 percent of the gage tolerance should be used whenever such an instrument is available provialed that its use does not involve an excessive expenditure of time. When the acceptability of a gage is questionable because it is near the tolerance limit, the gage may be reinspected by more accurate instruments.

8.3.6 Steps in the inspection process. The following steps must be taken in the inspection of all types of gages. Although these steps will not be mentioned in the instructions for inspecting each type of gage, it is very important that they be followed at all times:

8.3.6.1 Cleaning. Local safety regulations will govern the selection of cleaning solvents. If the gage has not recently been cleaned, it should be immersed and brushed in a solvent and dried. Carbon tetrachloride, kept in small covered containers when not in use, is preferred. Benzol and gasoline are sometimes used, but are not desirable because of inflammable and toxic properties. Stoddard solvent is not always satisfactory for final cleaning, because it may not remove all grease film. Alcohol is also used to some extent. Stoddard solvent or an equivalent is a suitable agent for removing heavy grease by means of a hot bath. Regardless of whether or not the gage has recently been cleaned, precision surfaces should always be carefully wiped with lintless cloth immediately before measurements are taken. Unbleached muslin with no sizing, or rayon are suitable cloths for this purpose.

8.3.6.2 Hardness measurement. The hardness of gages should be determined by a suitable hardness tester (see 8.5.9). The hardness of all gaging surfaces should be specified on the gage drawing and will govern the acceptance in all instances. If hardness has not been adequately specified on the gage drawing, the following practices will serve as a guide: A hardness of 63 to 66 on the Rockwell "C" scale or the equivalent is a reasonable requirement for tool steel gaging members. Thread gages should have a minimum hardness of C^{60}. Gages which have small diameters or sharp, narrow surfaces may have a hardness as low as C^{56}. Hardness measurements should be taken as near the gaging surfaces as possible.

8.3.6.3 Demagnetizing. When steel is magnetized, it not only has a different feel in measurement, but tends to collect tiny steel particles which interfere with measurements. Before inspection, it is advisable to check all gages for residual magnetism by placing a compass or a small piece of iron with low permeability very close to the gage and noting whether there is attraction. A strip of iron from a core of the windings in an electric transformer is well suited for this purpose. The best way to use this is to suspend it with a thread, and hold the gaging surface of any questionable gage near the iron. If there is residual magnetism present, the iron will swing toward the gage. Residual magnetism can be removed by means of a demagnetizing device. Be sure to remove the gage before the current in the demagnetizing device is turned off as otherwise the last half cycle may magnetize the gage again. Take the gage off the demagnetizing device slowly.

8.3.6.4 Visual inspection. See that the marking on the gage is clear and agrees with the marking on the drawing, and that all surfaces on the gage are of the specified quality. Check lapped surfaces for scratches and unfinished portions. Check ground surfaces for scratches, chatter marks, burns, and unfinished portions. Check machined surfaces for cracks and excessive scale. Check all surfaces for burrs. The places where ground or lapped surfaces form an edge or a corner should be stoned sufficiently to prevent an operator from cutting his fingers. Generally speaking, this edge should not be rounded to a radius greater than 1/64 of an inch. In instances where the edge is used in gaging operations, as in the case of the flush pin gage, the sharp corners should not be broken. Burrs on such surfaces can be removed by stoning parallel to the gaging surfaces. All types of gaging surfaces where gage blocks are to be placed should be stoned. A hard "Arkansas" stone should be used for removing burrs and touching up gaging surfaces.

8.3.6.5 Checking loosely tolerance dimensions. Unless otherwise specified, all dimensions given on the gage drawing in terms of fractions of an inch should be accurate to plus or minus 1/64 inch. Dimensions expressed in decimals should be accurate to plus or minus 0.01 inch, unless the drawing specifically indicates a different tolerance. All dimensions of commercial standard gages not explicitly given in the drawings should conform to American Gage Design Standards. (See the current issue of Commercial Standard, CS8, Gage Blanks, available from the Superintendent of Documents, Government Printing Office, Washington 25, D. C.)

8.3.6.6 Checking for function. If the item drawing is available, it should be studied to see if the gage is constructed to permit proper functioning. Points to consider in this connection are whether the gage handle is small enough so that it will not touch the component, whether all necessary air grooves are present, whether the gage appears to be strong enough to maintain continuous gaging accuracy in use, etc. Other points to consider in the check for operation are whether the workmanship is satisfactory, whether or not exactly tolerance; for example, whet her all slide fits function freely with no shake or side play; whether all dowel pins are tight, etc. Indicators are to be checked in accordance with 8.4.4. one of the best ways of checking for operation is to try a component in or on the gage, if available. The laboratory should obtain the corresponding components for all types of gages which are frequently checked. The gage inspector is expected to point out to his supervisor or to the engineering department any errors of any sort which he may notice in the gage design. However, this check of the gage design is intended primarily to detect functional faults such as those specified in the first part of this paragraph, other faults which are readily noticed by studying the gage itself, and by trying a component in the gage. The primary responsibility of the inspector is limited to the operational check. He is not expected to check all gage design computations in detail. However, if measurements taken over various parts of the gage do not appear to be consistent, or if there is some other special reason for him to suspect there may be an error in the gage design computations, he is expected to check the computations.

8.3.6.7 Checking closely tolerance dimensions. This is to be done in accordance

with the following instructions and those contained in 8.5. In general, the exact values of closely tolerance dimensions are to be measured and entered on the gage record card. This applies where actual measurements can be taken without taking up extra time, when dimensions do not fall within the gage drawing limits, when check or setting g-ages are being inspected, and when gages are to be sent out for salvage. However, when gages are within the drawing limits, and when calibration would require extra work such as combining different gage blocks, the gage may be accepted as being within drawing limits without spending the time to measure the exact dimensions. In instances where a gage appears to be only slightly outside the gaging limits, it is desirable to reinspect by other methods of measurement to make sure that there has been no error in inspection. Both methods should give identical results. If not, the source of error should be determined. Gaging surfaces should be touched by hand as little as possible during inspection. Immediately after inspection is completed, or when the gage is left to stand overnight, the gaging surfaces should be wiped with a cloth which has been diped in a neutralizing and temporary preservative oil.

8.3.6.8 Sealing. After the gage has been approved, all adjusting and lock screws which could change a dimension of the gage should be sealed with wax. It has been found that resetting is facilitated if a small disk of felt, paper, or similar material is placed over the heads of adjusting screws before sealing. The felt keeps the wax from entering the head of the screw. Without this device, considerable time is frequently spent in cleaning wax out of screw heads, particularly in the case of adjustable snap gages.

8.3.7 Finishes.

8.3.7.1 Requirements. The finishes on all gages must conform to the requirements of the applicable gage drawings. Generally, gaging and functioning surfaces of precision gages require lapping or must, at least, be finely ground. Ordinary machine finishes are usually adequate for other surfaces of gages.

8.3.7.2 Inspection. The degree of smoothness is ascertained in accordance with the provisions of Standard MIL-STD-10. Inspection may be conducted with the aid of a suitable surface finish measuring instrument or visually, depending upon the accuracy required. In addition to smoothness measurement, highly finished surfaces should be visually inspected for chatter marks and burns. Both of the latter defects are undesirable as chatter marks decrease the gaging area of the members, thus decreasing the wear life, and burn marks indicate overheating which affects the gage hardness and causes cracks.

8.4 CARE AND USE OF INSPECTION TOOLS

8.4.1 General. Since no measurement can be more accurate than the instrument used in inspecting, the care of gage inspection tools is an important phase of the gage checker's work. In general, the checker should avoid dropping or striking tools in order to avoid the possibility of causing burrs, springing frames, or destroying adjustment; he should check tools frequently for wear and for proper adjust merit., and he should be careful to wipe tools with cleaning fluid, dry them and then wipe with a slightly oily chamois or cloth after use, in order to prevent corrosion. The following suggestions apply to particular tools:

8.4.2 Micrometer calipers.

8.4.2.1 Outside micrometers. The outside micrometer is the instrument most commonly used for measuring distances between external surfaces where extreme accuracy is not required. Experienced gage makers can duplicate measurements with a micrometer within 0.0001 inch. However, it generally is not desirable to assume that the accuracy of a l-inch micrometer is better than plus or minus 0.0002 inch. Larger size micrometers are somewhat less accurate. A micrometer can be used to best advantage where the tolerance of the gage part being measured is 0.0005 inch or greater. Inexperienced inspectors should check their micrometer readings against gage blocks and precision rolls until they have developed the proper feel. The adjustment of the micrometer used for gage work should be checked frequently by means of gage blocks or precision rolls, depending upon whether the micrometer is most often used on flat work or rounded sur-

faces. The widely accepted practice of checking the setting of a micrometer by bringing anvils together and observing the zero reading is not a good method because there is nothing between the anvils to simulate the feel of the component. Gage blocks or rolls used for setting should be approximately the size as the component most frequently checked, or if the micrometer is used for all around measurement, a size at the middle of the micrometer scale is best. For example, when it is desired to make a quick check of a l-inch micrometer used for general purposes, ½-inch gage block should be used. The purpose of this is to minimize the effect of lead error. Occasionally, a thorough check of the micrometer should be made by using four or five gage blocks of equal size intervals distributed over the total range. A check for periodic lead error can be made by trying three different combinations of gage blocks, each 0.008 inch different from the other in size. Wear on micrometer anvils can be detected by measuring a precision ball between various points on the anvil surface, particularly near the edges. In general, the maximum variation in reading should not exceed 0.0002 inch. Wear on the micrometer lead screw can be detected by pushing the thimble to and fro in the direction of the lead screw axis. If there is any shake, the lead screw adjustment should be tightened. However, this adjustment is seldom needed. Care should be taken not to tighten the adjustment so that the lead screw binds. The thimble of the micrometer should turn easily at all positions. The parallelism of micrometer anvils can be checked by measuring two precision balls in various positions. The size of the two balls should be such that the position of the thimble will be altered by half a turn in changing from one ball to another. In other words, the size of the balls should differ by about 0.012 inch, or a multiple of 0.025 plus 0.012 inch. If the lock nut on a micrometer is used, be sure to tighten the nut without excessive force and to check the measurement again after the lock nut has been tightened. Tightening the lock nut sometimes shifts the position of the spindle on some micrometers. If the ratchet is used for tightening the micrometer, care should be taken to tighten the spindle against the work gently. Otherwise momentum of the rotating thimble may make the micrometer much tighter than the checker realizes.

8.4.2.2 Inside micrometers. The inside micrometer generally cannot be depended upon for a gaging accuracy less than ±0.0003 inch. It can best be used to measure internal surfaces which have tolerances greater than 0.001 inch. In using the inside micrometer to measure holes, one anvil should be kept stationary and the other anvil should be moved back and forth, and up and down, while the micrometer is being expanded. When the free anvil no longer moves freely the operator can be assured that he has placed the micrometer across exactly opposite points on the diameter. It is good practice to take two or more readings in order to make sure that the minimum diameter has been measured. An inside micrometer should have radii on its anvils which are smaller than the radius of the hole being measured. The inside micrometer wears on the radius of the anvils, where a flat is formed. This can be detected by studying the surface of the anvils visually or by placing the anvils in a contour projector. Where it is desired to make an internal measurement to an accuracy greater than that of the inside micrometer, measurement can be made by means of the transfer method. This consists of obtaining the proper fit of the internal micrometer in the hole, and then locking the thimble of the micrometer in position. The micrometer is then removed from the hole and the distance between the anvils is measured with an outside micrometer, using a very light feel, or by gage blocks with internal accessories. Whenever a different anvil or special extension rods are used, it is important to recheck the setting of tile internal micrometer.

8.4.2.3 Micrometer depth gages. The micrometer depth gage is generally accurate to about ± 0.0003 inch and is used to measure the depth of internal surfaces where the tolerance of the surfaces is 0.001 inch or greater. The important point to remember in using the micrometer depth gage is that a comparatively light pressure in advancing the thimble can raise the anvil away from the surface upon which it is resting, thereby creating an error

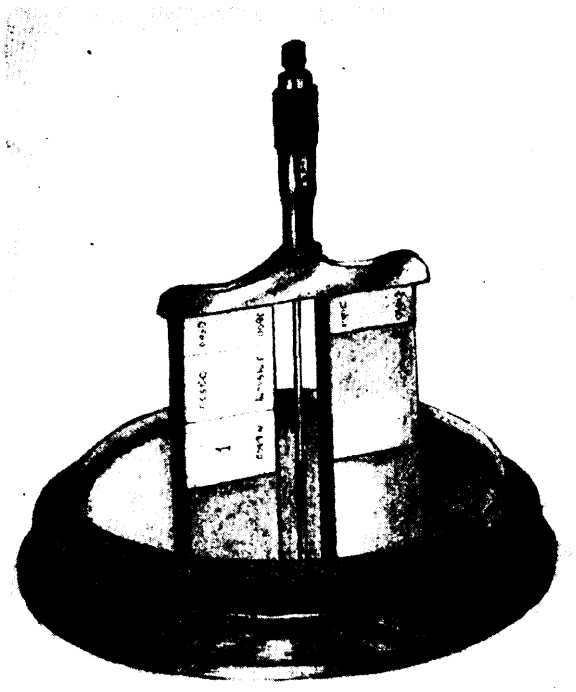

Figure 123. Adjusting micrometer depth gage.

in the reading. For this reason, the contact stem should be lowered very carefully with a light touch on the thimble, and should be withdrawn slightly and brought to bear on the component two or three times in order to make sure it has not over run the proper reading (see fig. 123). The correction for a micrometer depth gage is determined by reading over two equal gage block combinations placed on a tool maker's flat. The correction should be determined each time a different extension is used.

8.4.3 Vernier gages.

8.4.3.1 Vernier calipers. Vernier calipers can be used to measure internal or external dimensions. They are generally accurate to plus or minus 0.001 inch and are used when the tolerance of the work to be measured is greater than 0.005 inch. The reading can be taken more accurately if a magnifying glass is held in front of the scale. When calipers are used to measure small external surfaces, they should be manipulated to obtain the minimum reading. Calipers used to measure internal surfaces should be manipulated to obtain the maximum reading. Vernier calipers are sometimes used to make more accurate measurements, particularly in the case of internal cylindrical surfaces, by means of the transfer method. When this is done, the verniers are adjusted until they fit the surfaces being measured and are then locked in position. After this, the distance between the gaging surfaces of the calipers is measured directly by means of micrometers. This method is often used in measuring surfaces on which external or internal micrometers cannot easily be fitted. The adjustment of the calipers is made by placing gage blocks against the jaw when the external measuring function is checked, and by placing the jaws directly against gage blocks with internal setting accessories when the internal measuring function is checked. Wear on the jaws can best be checked by visual means and by measuring rolls or rings of known dimensions. Another point in connection with wear is to make sure that the sliding head is not loose.

8.4.3.2 Vernier depth gage. The accuracy of this gage corresponds to the vernier caliper. Its only advantage over the micrometer depth gage is that it is considerably faster when dimensions to be checked vary over a considerable range. This gage can best. be used where it is necessary to measure the length or depth of several surfaces whose tolerance is 0.005 inch or greater.

8.4.3.3 Vernier height gage. After a moderate amount of use, the accuracy of this gage is generally slightly less than that of the ordinary vernier calipers. The gage can be used to measure height directly by bringing the gaging surface of the sliding head in contact with the object whose height is to be measured. However, greater accuracy can be obtained by indicating over the object with a dial indicator and then bringing the height gage up under the indicator until the indicator reads the same as it did when passed over the object (see fig. 124). The reading on the vernier scale indicates the height. The scale of the height gage can be read somewhat more accurately if a magnifying glass is used. The only advantage in using a vernier height gage in this way is that it is very fast. When height must be established accurately, of course, comparative read-

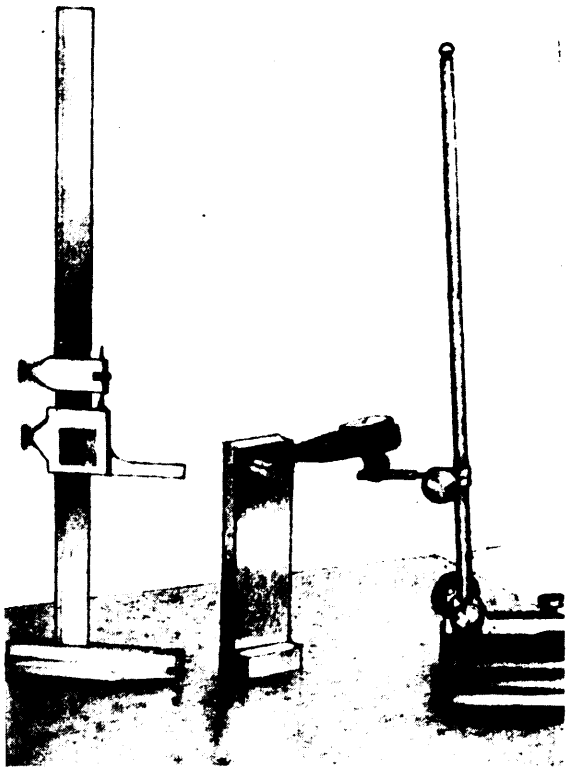

Figure 124. Use of vernier height gage.

ings must be taken over block combinations as specified in 8.4.3.4.

8.4.3.4 Vernier height gage with test indicator. A satisfactory method of measuring heights accurately is to use a vernier height gage with an indicator attached, employing the height gage merely as an adjustable support for the indicator and disregarding the scale on the height gage (see fig. 125). The accuracy of the measurements made with this arrangement will depend on the accuracy of the test indicator and the rigidity of the supporting means. The gage is used by indicating over the surface whose height is being measured and adjusting the indicator to give a zero reading. Then the height gage is drawn back and a gage block combination built up under the indicator until the reading is zero. The desired height measurement is obtained by adding the lengths of the gage blocks. A trial stack of blocks equal to the nominal height to be measured can be used as a first step in order to save time. However, if the indicator reading obtained over them is not very nearly zero, a new combination of blocks. estimated to bring the indicator to zero, should be tried. The difference between the actual height and the nominal dimensions can be estimated by reading the graduations of the indicator, when. a slightly lower accuracy is acceptable. When readings are taken on an indicator height gage, the base of the height gage should be tapped very lightly in order to get the indicator properly settled in position. A precaution to take when making extremely accurate measurements is to draw the ball point over surfaces from the back side in order to avoid the jar which is caused when the ball point is thrust forward onto an object. Greater accuracy will be maintained in comparative readings if the indicator is always moved from lower to higher surfaces. For example, indicate from the low step to the high step in indicating over the steps of a flush pin gage. Another precaution which must be taken if accuracy is to be maintained is to make sure that the test indicator has been securely fastened to the support and that the support is rigid and strong. Unsuitable supporting means are frequently the cause of errors in measurement. Always test the support by bringing the indicator point in contact with an object and noting the variations in the indicator reading as pressure is exerted on top of the indicator. When this gage is used to measure the height of flat surfaces, the indicator ball point should be run over the entire length of the surface in order to make certain that no part of the surface is outside of the prescribed limits. When measuring the height. of a pin the ball should be run over the entire length of the pin for the same purpose. When establishing the center of a pin by measuring over the top of the pin with a height gage, it is important to subtract from the reading the measured radius of the pin instead of the nominal radius. When a test indicator is used in conjunction with a height gage, the indicator should be adjusted so that the contact arm is as nearly horizontal as possible. When the arm makes an angle with the horizontal the indicator readings do not record variations in the height of the work directly; they must be mul-

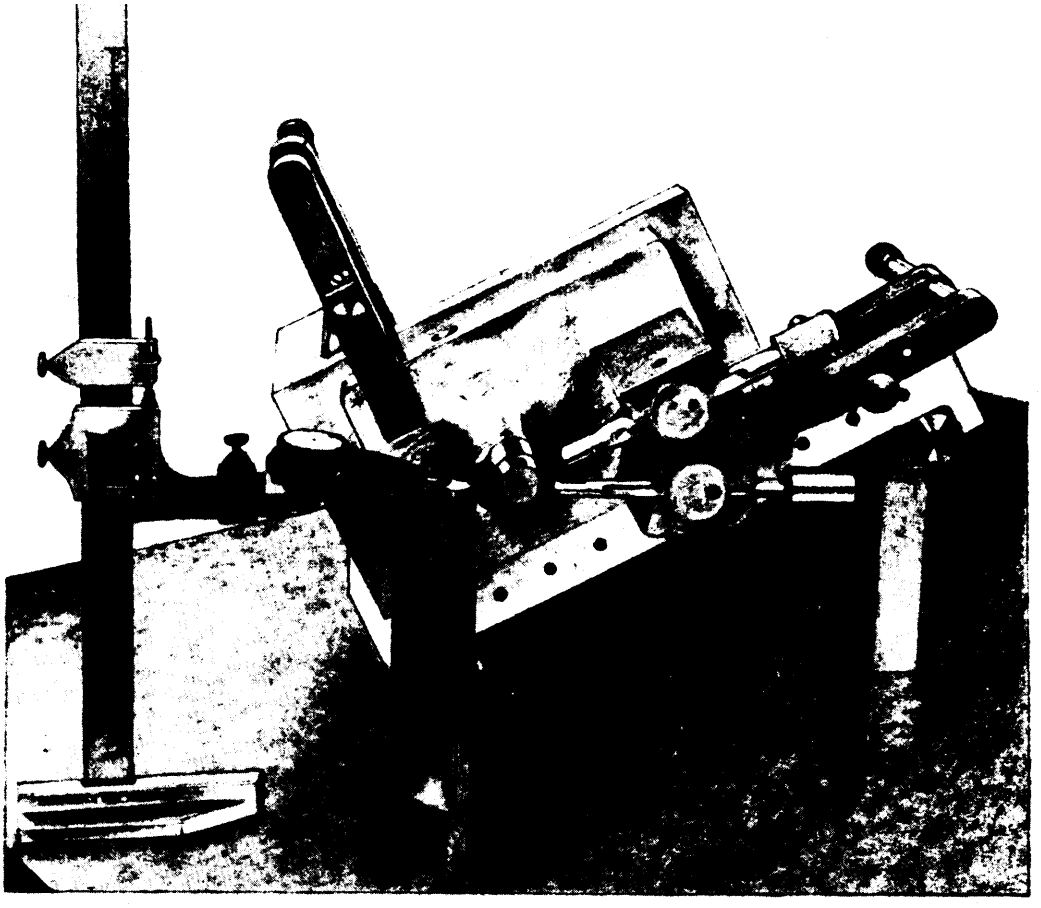

Figure 125. Use of vernier height gage with test indicator.

tiplied by the cosine of the angle which the arm makes with horizontal. This can be understood by studying figure 126, in which "a" is the angle made with horizontal, "x" is the lever length to which the indicator dial was calibrated, and "y" is the effective arm length of the stem for any given angle.

Since the cosine of 15 degrees is 0.966, it is common practice to permit the arm to form an angle up to plus or minus 15 degrees with horizontal, on the assumption that indicator readings will still represent the actual work variations to the nearest 0.0001 inch, provided the difference between the gage block stack and the work height does not exceed 0.001 inch. The angular position of the indicator itself will not affect the accuracy. In instances where the nature of the work surface makes it necessary to adjust, the stem to an angle greater than 15 degrees, the combination of blocks should be altered until the indicator reading is exactly zero over both the blocks and the work. Since an inspector must depend on his test indicator very frequently for accurate measurements, it should be kept in the best possible condition. The test indicator should be checked often, giving consideration to the following points:

a. Move the contact point with the fingers and note whether the indicator shows any tendency to stick.

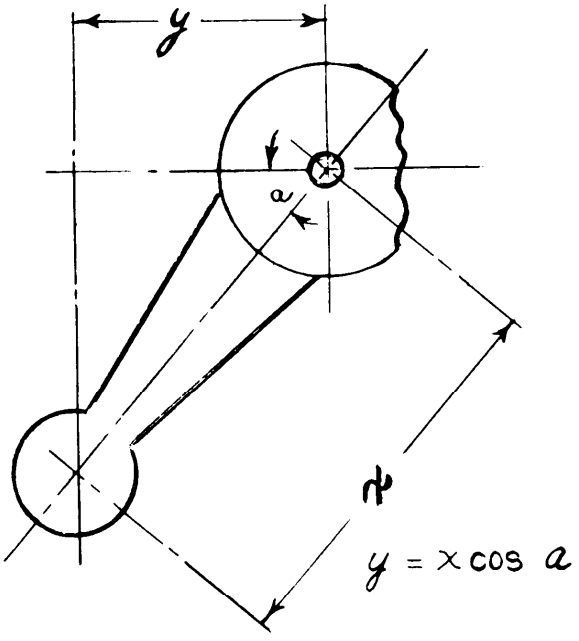

Figure 126. Error in test indicator.

b. Check the calibration by trying different combinations of gage blocks under the indicator while it is held rigidly and noting whether the variations in the indicator readings correspond to the variations in the size of the blocks used. Due allowance should be made for errors found by such a calibration when using the indicator.

c. There should be no backlash. Check for this point by proceeding from larger to smaller combinations of blocks in addition to proceeding from smaller to larger blocks when checking the calibration.

d. Try to move the contact point from side to side. There should be no play which registers on the dial.

e. Check to see whether the contact pressure is the same with the reversing stud up as it is with the reversing stud down.

f. Be sure that the contact points used are those designed for the particular model of test indicator in question, and that they are securely positioned. Large errors are sometimes an indication that the wrong contact point has been used.

g. Make sure that the shift lever (reversing stud) is all the way down or all the way up before checking or using the indicator.

h. Test indicators are not dustproof and precautions should be taken to see that the instrument is protected from dust at all times. The instrument should be disassembled and cleaned occasionally by a person familiar with the construction of test indicators.

i. Do not tighten the lock screw that holds the case in place any more than is necessary to maintain proper position.

j. The accuracy of the test indicator depends upon proper alinement of the bearings. For this reason, it is important not to do anything which could bend or twist the case.

8.4.4 Dial indicator gages. Dial indicators are available in a variety of styles, magnifications, and ranges. Some are graduated in increments as fine as 0.00005 inch and ranges can be obtained commercially up to 1 inch. In selecting a suitable indicator it should be remembered that the range of an indicator decreases as the accuracy increases. In the gage laboratory, dial and test indicators are used principally to compare heights as described in section 8.4.3.4, and to check parallelism concentricity and out-of-roundness.

8.4.4.1 Parallelism is determined by adjusting the position of one surface until the indicator does not vary as it is moved over the surface. The indicator is then passed over any other surfaces which are supposed to be parallel to the first surface. Any variations in the indicator reading will denote errors in parallelism.

8.4.4.2 Out-of-roundness and concentricity is checked by placing the gage between centers or on a "V" block with the indicator in contact with the surface to be checked and rotating the gage. Variations in the indicator reading will indicate runout or twice the eccentricity. Where the drawing specifies "permissible eccentricity 0.001 inch," the variation in reading observed on the indicator may be 0.002 inch.

8.4.4.3 The indicator is also used as part of a mechanical comparator in which the indicator is adjustably mounted over a stationary base and a fixed anvil. This arrangement is commonly employed to measure a number of parts of the same size whose tolerance is 0.0005 inch or more. When a dial indicator is used in this manner the setting of the indicator should be checked after all pieces have been measured

as well as before, in order to make sure the indicator setting has not been disturbed during measurement.

8.4.4.4 Methods of checking and maintaining dial indicators are specified in 8.4.3.4.

8.4.5 Surface plate and accessories.

8.4.5.1 Surface plate. Surface plates are used when several portions of a gage are measured from a common base when heights on two or more gages are compared and when a special set-up of angle irons and clamps is constructed to hold a gage in a special position. Cast iron surf ace plates used for gage inspection should be flat within 0.0003 inch between any two points not greater than 18 inches apart. The flatness of the surface plate can be checked by means of a knife-edge straightedge, or by means of blueing against plates of known flatness. More accurate measurement can be made with an autocollimating telescope. The irregularity of a surface plate, or the difference between adjacent high and low spots, should not exceed 0.0002 inch. The irregularity can be determined by mounting a dial indicator on an adjustable movable support and setting it up to bring the indicator point into contact with the surface plate. The indicator then is moved about on the plate and the irregularity as shown on the indicator is noted. The scraping on a cast iron surface plate should be such that there are at least 15 high points per square inch. Granite surface plates should be accurate to 0.0001 inch over the total area. It is important to recheck surface plates periodically for worn spots, because cast iron surface plates can wear more rapidly than most gage checkers realize. Cast iron plates should be protected by setting all pieces on the plate gently and by making sure that all burrs are removed from items which are put on the plate. The proper way to set heavy objects on the plate is to place them gently on one edge of the plate and then slide them into position (see fig. 127). Do not place balls or small cylinders directly on a surface plate because these objects have a small area of contact which may not rest on enough high points to give accurate positioning. These objects are also more apt to wear a surface plate due to the high unit pressure which they exert. Some inspectors place their surface plates on two large pieces of wood which are bolted together at the center with a single bolt. The surface plate is placed on the upper wooden block, thereby providing a means for rotating the surface plate. This makes it possible for the checker to reach all portions of the set-up easily without going around his bench.

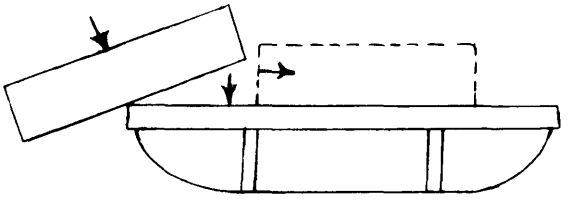

Figure 127. Method of placing a heavy object on a surface plate.

8.4.5.2 Angle iron and tool maker's knee. Angle irons and tool maker's knees differ from each other in construction as shown on figure 128. Tool maker's knees generally are smaller and more accurate than angle irons. Experienced checkers often make themselves several plates of convenient sizes with precision surfaces at right angles and with tapped holes for fastening the work. These are sometimes called "angle plates". The faces of tool maker's knees used for gage inspection should be square within 0.0001 inch for each 6 inches of length, and opposite sides should be parallel within 0.0001 inch for each 6 inches of length. Manufacturers of angle irons generally specify an accuracy of 0.0002 inch for the relationship of the precision surfaces. However, it is preferable to use angle irons accurate to 0.0001 inch for gage inspection. These can be obtained by reworking irons or by selecting the best from new commercial irons and reserving them for use on work requiring high accuracy. Known errors in angle irons or other devices should be taken in account for very precise measurements. For example, if the edges of an angle iron are known to be 0.0002 inch out of square, this fact must be taken into account when the iron is turned on one of its edges to check the squareness of two surfaces on a gage which has been clamped on the iron. If the left edge of the iron is high, then the 0.0002 inch should be subtracted from the indicator reading when the indicator is at the left side of the gage. If the

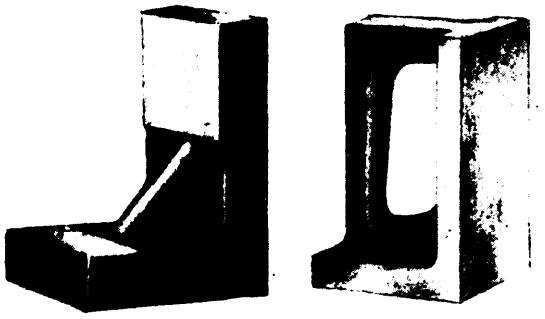

Figure 128. Tool maker's knee—universal angle iron.

precision surface on the gage is not so long as the edge of the angle iron, the indicator reading will not vary by 0.0002 inch but by an amount equal to the proportion of the lengths to 0.0002 inch. The squareness of the faces of angle irons and tool maker's knees can be checked by means of a master cylindrical square and to gage blocks, one block 0.0001 inch larger than the other. They are set up as shown on figure 129 with the smaller block at one end of the square. It should not be possible to insert the larger block between the square and the tool maker's knees at any point. The process is repeated with the small block at the other end of the square. Parallelism can be checked by direct measurement, or by indicating over one surface when the opposite surface is resting on a surface plate. A convenient and accurate way to check for squareness when a master cylindrical 1 square is not available is shown on figure 130. To check an angle iron in this manner, attach two tool maker's buttons of the same size to a plate, one directly above the other. They need not be located accurately; they need only be securely fastened. Place the angle iron near one side of the rolls as shown in figure 130 and aline it so that its face is parallel to the axis of the buttons. Then measure the distance between the angle iron and each of the buttons by means of gage blocks. Place the angle iron on the opposite side of the buttons and repeat the process. The difference in the distance to the buttons in each of the two instances should be equal and opposite if the angle iron is square. If they are not, the amount of the discrepancy will indicate the error in squareness of the angle iron for a distance equal to the distance between the centers of the buttons.

Tool maker's knees and angle irons, like parallels and surface plates should be stoned whenever there is any indication of burrs.

8.4.5.3 Parallels. Parallels used for gage inspection should be parallel within 0.0001 inch in 6 inches of length and should be accurate for size within 0.0002 inch. Each pair of parallels should be kept together. Parallels from different sets may not be of equal size, even though they are satisfactory when matched with the proper parallel. Parallels should be handled carefully to avoid injury to themselves and the surface plates upon which they are placed. Roll heavy parallels on to the plate in the same manner as other heavy objects (see fig. 127). Burrs should be removed with an Arkansas stone. Most parallels tend to be slightly warped. The effects of this condition

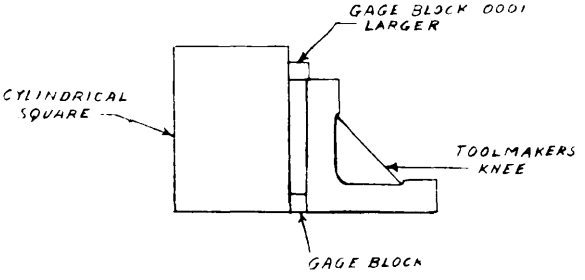

Figure 129. Checking tool maker's knee for squareness.

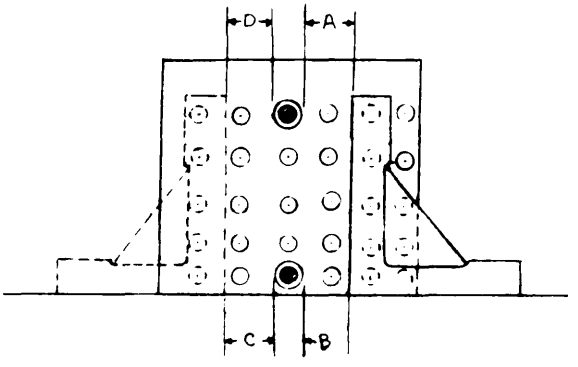

Figure 130. Checking squareness by means of tool maker's buttons.

will be minimized by placing the concave side of the parallels on the surface plate. The difference between the concave and convex sides can be detected by twirling the parallel on a surface plate. The convex side will tend to rotate about the center of the parallel, whereas the concave side will tend to drag at the ends. Wear on parallels can be detected by direct measurement of thickness or by indicating along the surfaces.

8.4.5.4 Precision straightedge. There are two types of precision straightedges; those with bevelled edges and those with knife edges. Those with bevelled edges generally are used for positioning. The straightedge is clamped to a plate and gage blocks of appropriate dimensions are built up between the straightedge and the sections of the gage which are to be positioned. The gage is then pressed against the blocks and clamped on the plate. The working surfaces of bevel-edge straightedges should be flat within 0.0001 inch for each 6 inches of length. Knife-edge straightedges are to be used to check the flatness of precision surfaces. The straightedge is placed against a surface and viewed with a strong 1ight in back of the straightedge. Light which passes between the two indicates errors in flatness of the surface. A knife-edge straightedge may be checked for straightness, by placing it on a tool maker's flat in front of a strong light. If the straightedge is in good condition, no 1ight will pass between the edge and the flat.

8.4.5.5 Universal precision square. Universal precision squares (see fig. 131) usually are employed to check the perpendicularity of two surfaces. The square is placed against the surfaces in front of a strong light. Errors in squareness are clearly visible under such conditions. If the light test shows the surfaces are not perpendicular, the error can be estimated by placing a gage block between the square and the surface at one end of the square. Blocks of varying dimensions are then tried at the other end of the square until a block is found which exactly fits the space between the square and the surface. Care must be taken not to force too large a gage block into this position. The error in a surface will be represented by the difference in size of the blocks

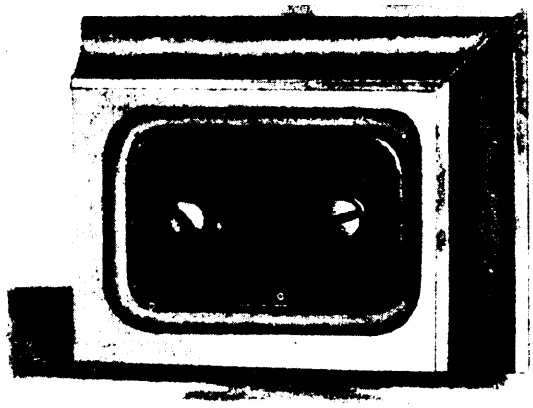

Figure 131. Universal precision square.

at each end of the square. The gaging surfaces of precision squares should be perpendicular and flat within 0.0001 inch for each 6 inches of length. Precision squares are checked for squareness by means of a cylindrical square and gage blocks, the method being similar to that previously described for checking angle irons. The straightness of precision squares can be checked against a tool maker's flat.

8.4.5.6 Planer gage. Planer gage (see fig. 132) is used in conjunction with a height gage and gage blocks to measure heights. Its chief advantage is that it can be adjusted to a given height in far less time than is required to build a stack of gage blocks. It also has an advantage in that it is somewhat more stable than very long combinations of gage blocks. To use the planer gage in checking the difference in height of two surfaces, an indicator is adjusted to read zero when passed over the lower surface. The adjustable member of the planer gage then is brought up under the indicator until it again reads zero. A stack of gage blocks equal to the specified difference in height is wrung to the planer gage and the location of the higher surface is checked by indicating over the top of the gage blocks and the higher surface. After a planer gage has been tightened into position an indicator should be moved across the adjustable member to check parallelism.

8.4.6 Roll holder. Roll holders are used to hold precision measuring rolls in position while

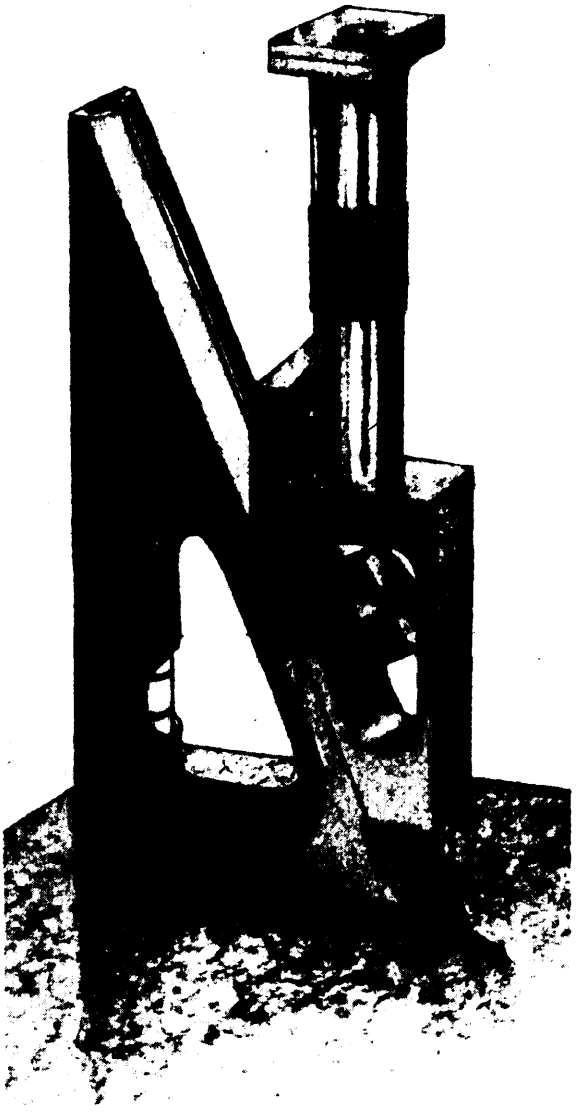

Figure 132. Planer gage.

a measurement is taken. These tools are particularly useful in locating the intersection of two precision surfaces by means of an indicator height gage and gage blocks in cases where measurements cannot be made directly.

8.4.6.1 Roll holders are of types, the reversible (see fig. 133) and the conventional type (see fig. 134) . On the holder shown on figure 133, the lock screw and clamp can be used at either end, thereby making it possible to use the holder with a greater range of roll sizes.

8.4.6.2 Where a gage has a finish ground or lapped surface perpendicular to the two surfaces being measured, the roll holder can be wrung to this surface and slid along until the roll is in contact with both the surfaces which are being measured.

8.4.6.3 When a gage does not have convenient precision surfaces, the roll holder can sometimes be wrung to the plate on which the gage has been clamped or to gage blocks which in turn have been wrung to the plate.

8.4.7 'Hold-down fixture. This device has proved very useful in the measurement of tapered plugs and plugs which have radii. When the entering end of the plug is square, this surface is placed directly on the hold-down fixture (see fig. 135) and the plug clamped in position by tightening the screw at the top of the fixture. Gage blocks then can be wrung to the base of the fixture for supporting rolls and the entire unit can be placed between the anvils of a bench micrometer or a precision measuring machine.

8.4.8 Channel-bar fixture. The channel-bar fixture (see fig. 136) is used principally to hold precision measuring rolls in position when measurement is not made directly over the rolls. The rolls are placed on the base of the fixture and pressed against the channel side. A gage part with a radius or a taper then is placed on the rolls and the diameter of the gage at the point where it contacts the rolls

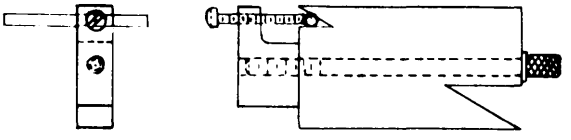

Figure 133. Reversible roll holder.

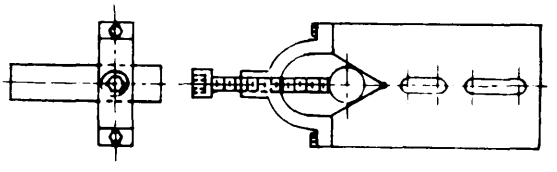

Figure 134. Conventional roll holder.

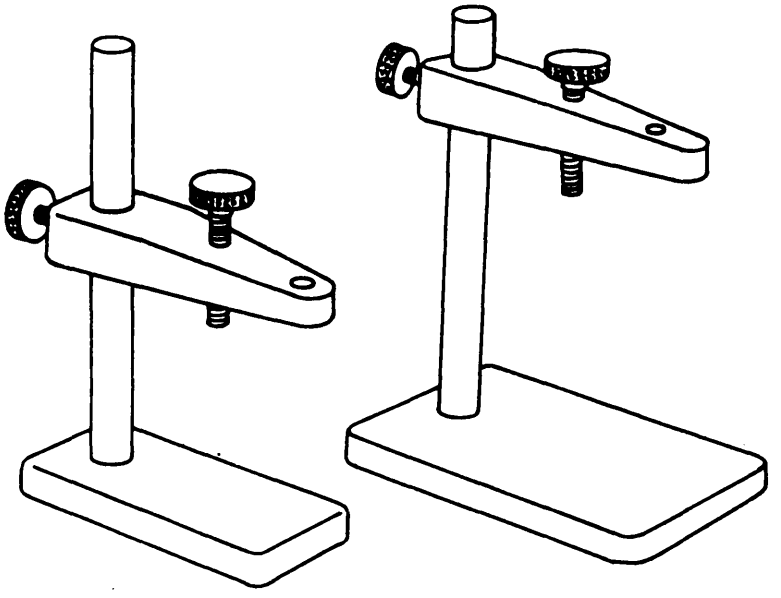

Figure 186. Hold-down fixtures.

is determined by measuring the height of the gage.

8.4.8.1 The sides of the channel-bar fixture shown in figure 136 are adjustable and can be spaced any desired distance apart by placing gage blocks between the bars and then locking them in place against the gage blocks.

8.4.8.2 Another variation of this idea is a nonadjustable channel bar fixture made in one piece. Varying widths are obtained by placing gage blocks between the precision measuring rolls and the channel bars as spacers.

8.4.8.3 The adjustable type of fixture has a greater range and versatility than the nonadjustable, but the nonadjustable type is more dependable and accurate, and may be set up more quickly.

8.4.9 Locating plate. The special plate shown in figure 137 has proven very valuable for a wide variety of measurements.

8.4.9.1 Small profile gages may be located by inserting gage blocks between two precision surfaces on the gage and two sides of the plate. The gage then is clamped in position and other dimensions can be checked by inserting gage blocks and buttons where necessary between the edges of the plate and the other surfaces.

8.4.9.2 The buttons shown on figure 137 can be located in any position on the plate by means of gage blocks, and can then be locked in position. The plate is used principally for the measurement of profile gages which do not have any reference surfaces from which the gage can be located. Such a gage is shown on figure 138. The top surface of this gage is not precision ground and is not perpendicular to the centerline of the gage.

8.4.9.3 In use the distance between the radii are computed at two different points, and the rolls locked in positions calculated to contact a gage of exactly nominal dimensions. A gage is then placed between the rolls. If there is any shake between the gage and either pair of rolls, the error in the gage can be determined by repositioning the rolls until they fit, and by locating the new position of the rolls with gage blocks.

8.5 CARE AND USE OF PRECISION MEASURING INSTRUMENTS

8.5.1 General. Space does not permit a de-

SUPERSEDES PAGE 89 OF 12 DECEMBER 1950

tailed discussion of the methods of operating precision measuring instruments. For this information the reader is referred to the catalogs and instruction books published by the manufacturers. This section is intended to point out the uses for which these instruments are best suited, and to point out facts relating to the care and use of the instruments.

8.5.2 Gage blocks and accessories. Gage blocks should be used only for the adjustment of precision instruments or as a means of establishing dimensions by reference, (For example, use for establishing heights in conjunction with an indicator height gage.)

8.5.2.1 It is sometimes necessary to check the distance between two surfaces by inserting gage blocks between them, and it also may sometimes be necessary to use gage blocks to position gages or gage parts. When this is done, the blocks should never be forced into position. Forcing not only injures the blocks; it also results in a false measurement.

8.5.2.2 Gage blocks should never be placed in contact with surfaces which are not finish ground, lapped, or scraped; Before placing blocks on any surface, remove burrs or any other irregularities from the surface. Gage blocks shouldn't be placed directly on a surface plate when it can be avoided. Preferably they should be wrung to a piece of steel with lapped, parallel sides, which in turn is placed on the surface plate. Direct contact should be avoided because scraped surface plates do not always provide adequate bearing area for blocks and tend to scratch them. Excessive wear on commonly used blocks can be avoided by the use, wherever possible, of less commonly used blocks. For example, if a combination equal to 1.200 inch is desired, use a 0.900- and a 0.300-inch block or a 0.800- and a 0.400-inch block instead of the commonly used 1.000- and 0.200-inch blocks.

8.5.2.3 Gage blocks should be thoroughly

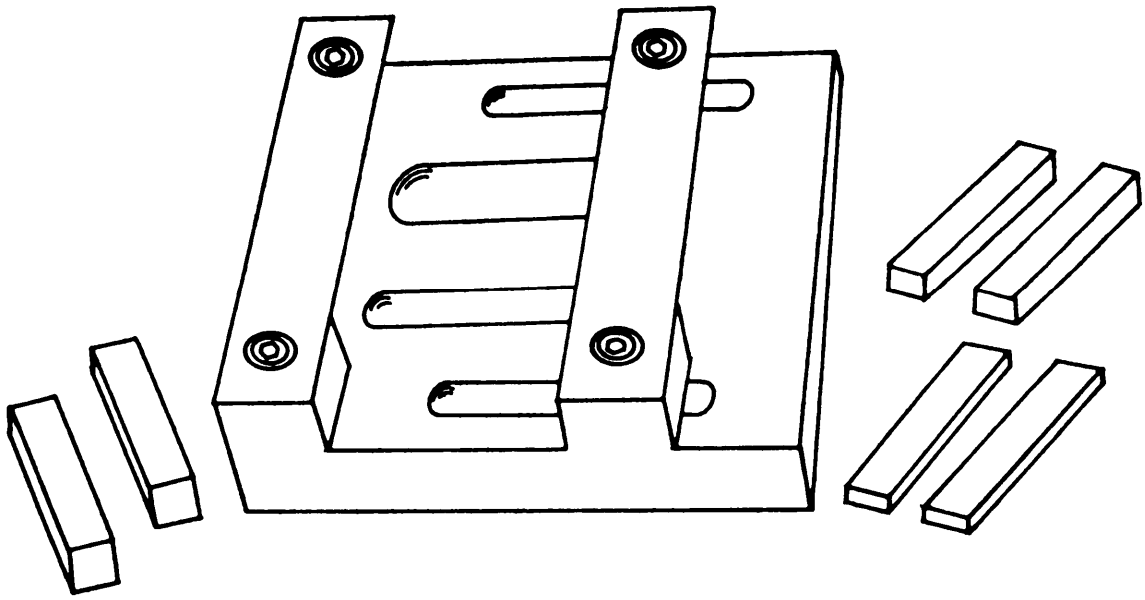

Figure 136. Channel-bar fixture.

SUPERSEDES PAGE 90 OF 12 DECEMBER 1950

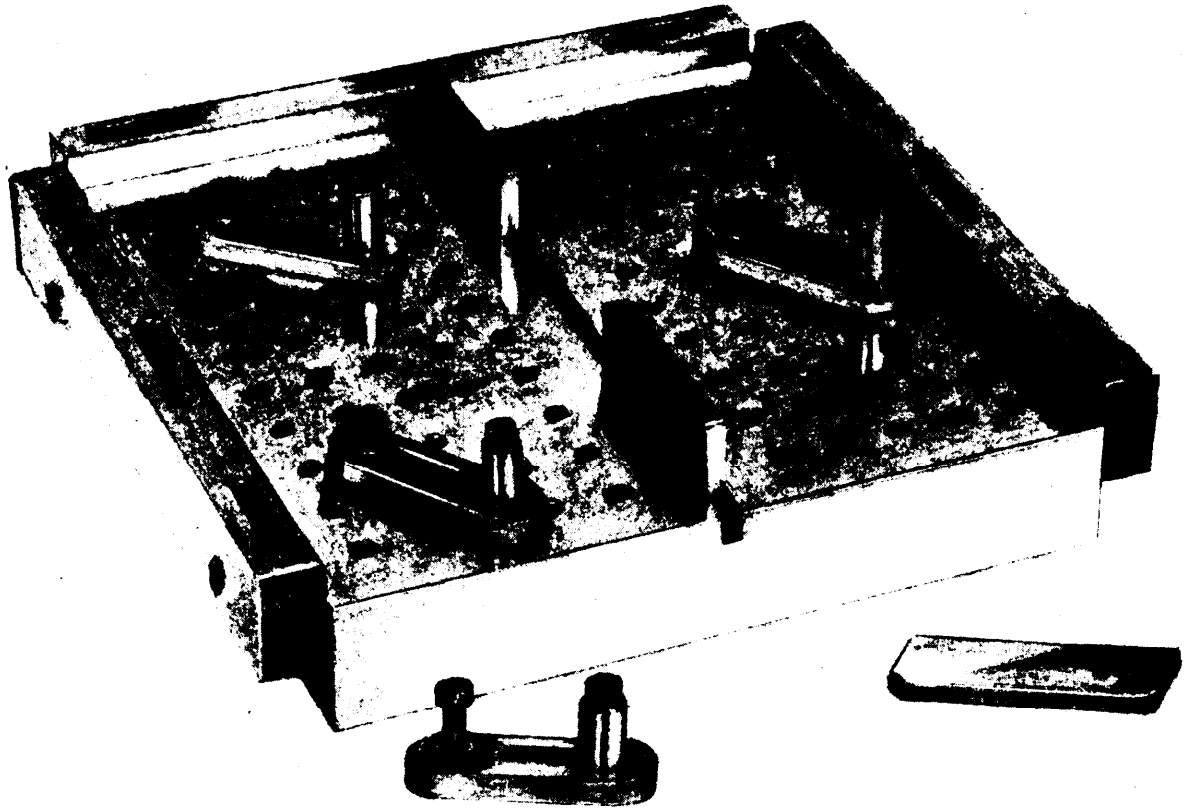

Figure 137. Locating plate.

cleaned with rayon, unbleached muslin or other lintless cloth before use. If a chamois is used it should be thoroughly clean. Always shake a cloth or chamois before wiping blocks. If blocks are too dry or worn to wring readily, they may be wiped across the palm of the hand before wringing. The hand will add enough oil to the surfaces to make a tighter wring. Blocks are wrung together by sliding one on top of another starting with a light pressure. Blocks which do not wring tightly should be taken apart and cleaned again. Any burrs should be removed with a hard Arkansas stone having a very flat surface. After the blocks have been found to fit smoothly they are pressed together firmly starting at an edge or corner and wrung to each other. In the case of Hoke, or square type, blocks wringing is accomplished better by rotating the blocks as they are pressed together. In rectangular blocks, the blocks should be started about ⅜ inch off center and wrung by sliding into position such that one is directly above the other. In combining Hoke type blocks the tie rod, or fastening screw which passes through the hole in the center of

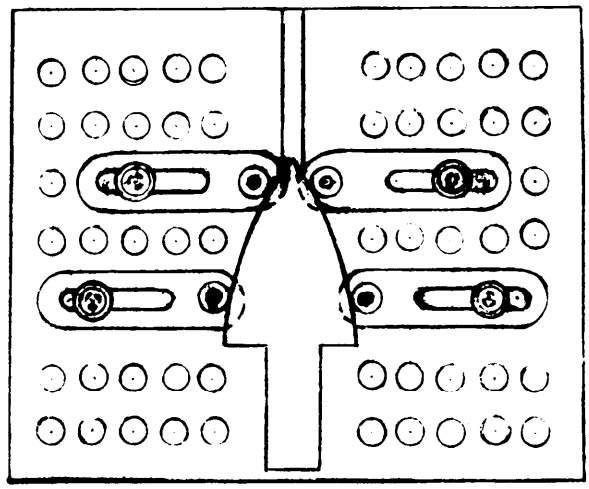

Figure 138. Checking profile gage on locating plate.

the blocks, should never be tightened sufficiently to bind on the blocks. The only purpose of this tie rod is to keep the blocks or accessories from falling if they should become loose from the rest of the stack. The tie rod should not be used in wringing the blocks together or in holding them in an exact position as tightening the tie rod will alter the size of the stack. When this device is used, it should be inserted after the blocks are wrung together in the usual fashion, using a very light pressure in tightening the lock nut.

8.5.2.4 Burrs on gage blocks can be detected by use of an optical flat.

8.5.2.5 Gage blocks should be handled by their edges to reduce the possibility of corrosion and to minimize the effect of the heat of the hand. Blocks should always be wiped off with a clean chamois or cloth after use.

8.5.2.6 Gage blocks that are in use should be calibrated periodically for size, flatness, and parallelism. (For methods of calibration see 8.26.) The latest calibrated values of the block sizes, as given on the card inclosed in the case with the blocks, should always be used rather than the nominal sizes when gages made to close tolerance limits are being checked.

8.5.2.7 When the construction of a gage is such that it is impossible to place close tolerance parts between the anvils of a bench micrometer or a precision mechanical comparator, the dimension can sometimes be checked by building a stack of blocks to form a snap gage as shown on figure 139. When this is done it is advisable to use chromium plated or carbide surfaced blocks for the outer members in order to minimize the effects of wear.

8.5.2.8 Carbide or chrome plated blocks can also be used to advantage at the ends of ordinary gage block combinations particularly where the combination is used on surfaces having a poor finish.

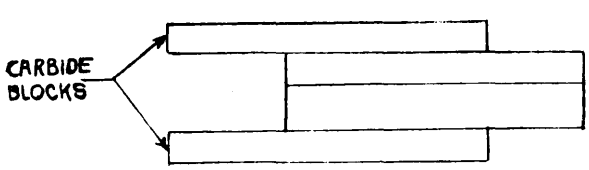

Figure 139. Snap gage made of gage blocks.

8.5.2.9 The importance of cleanliness as an aid to accurate measurement with gage blocks cannot be overemphasized. When blocks are used for setting purposes, be sure the anvils, gaging members or other surfaces with which the blocks come in contact, as well as the blocks, are thoroughly clean. The checker should practice using blocks until he is able to tell the difference in feel between a good fit and a poor fit caused by a film of foreign matter.

8.5.3 Sine bars and sine plates. The sine bar or sine plate is the device most commonly used to establish angles. Its name is derived from the fact that measurements with the bar yield the sine of the desired angle.

8.5.3.1 The sine bar differs from the sine plate in that the sine bar generally is not more than about 1 inch wide. The sine plate (see fig. 43) is much wider and usually has a heel and tapped holes for fastening work in place. The sine plate sometimes is referred to as a sine block. The information relative to the geometric properties of the sine plate also apply to the sine bar.

8.5.3.2 Sine plates are known as 5-inch, 10-inch, 20-inch, etc., depending on the distance between the two rolls on which they rest. This distance between the rolls constitutes the hypotenuse of the triangle formed by the sine plate, the surface plate, and the block combination used to elevate one end of the sine plate. The angle between the sine plate and the surface plate is the desired angle and the height of the gage blocks equals the length of the side opposite the angle.

8.5.3.3 The proper height of gage blocks for a desired angle using a 5-inch sine plate is the sine of the angle multiplied by 5 inches. Since multiplying by five is the same as multiplying by ten and dividing by two, this computation can be made easier by finding the sine of the angle in a table of natural functions, moving the decimal point one place to the right, and dividing by two. The height of the block combination for a 10-inch sine bar can be found by finding the sine and moving the decimal point one place to the right, while the proper height for the 20-inch sine bar is found by finding the sine, moving the decimal point one place to the right and multiplying by two.

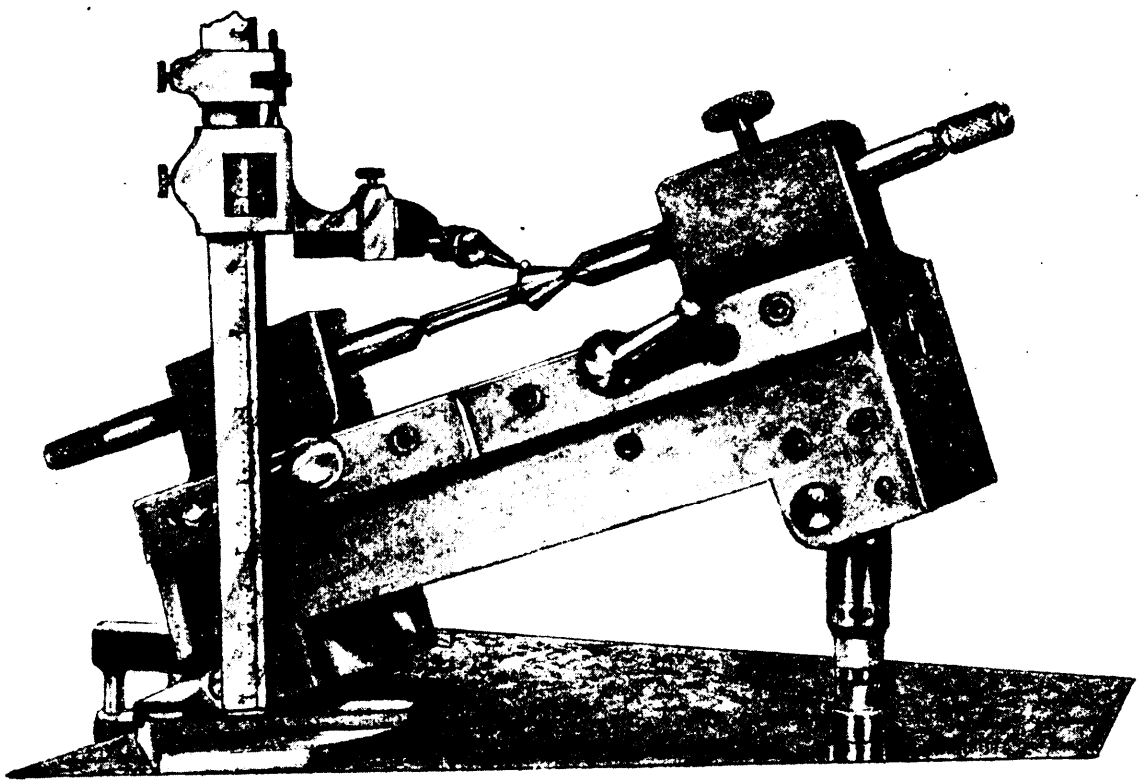

Figure 140. Sine plate with centers.

8.5.3.4 The accuracy of a sine plate is progressively less with larger angles. With large angles a small change in the height of the blocks corresponds to a comparatively large change in angle. A sine plate is less likely to remain securely in position at large angles. Sine bars or plates should preferably not be used for the direct measurement of angles larger than 45 degrees.

8.5.3.5 Gages which have more than one angle should preferably be set up so that it is not necessary to unclamp the gage and reposition it between the measurement of the angles. Extra time is required and observational errors are increased when an angle is checked against another angular surface rather than against a basic reference surfuce.

8.5.3.6 Where great accuracy is desired, gage blocks should be used under both rolls of the sine bar because the roll makes line contact only with the surface plate, and it may not contact enough high points on the plate to be accurately positioned. The accuracy of a sine plate may be determined by placing it directly on a surface plate and measuring the parallelism over the top of the bar with an indicating device. If the surfaces are not parallel the rolls have not been properly positioned on the sine plate or the rolls have worn excessively.

8.5.3.7 Greater stability can be obtained, if needed, by placing the side of the lower roll against a parallel which has been clamped in place on the surface plate (see fig. 140). Hoke, or square type, blocks also provide greater stability. If these are not available, two equal stacks of USA type blocks may be used in the case of large sine plates. The blocks should be placed so that their long sides are parallel with the long sides of the angle plate. If a sine plate is used for a steep angle and the work is very high, an inverted "V" block or a heavy object may be placed at the high end of

the sine plate in order to counterbalance the weight of the gage and the angle iron.

8.5.3.8 A serious mistake sometimes made by beginners is placing a rough surface directly on the sine plate. It nearly always is necessary to clamp the gage to an angle plate and in turn place the angle plate on the sine plate. The basic precision surface or centerline from which the angles are dimensioned is then checked for parallelism by means of an indicator, and the position of the gage on the angle plate adjusted until the reference surface is parallel with the precision surface upon which the rolls of the sine plate rest. One end of the sine plate then is placed on a stack of gage blocks. The surface which formerly was tilted through the given angle will now be horizontal, provided the gage is correct. This is checked by indicating over the surface (see figure 141). If the surface being checked is not horizontal, the blocks are changed until the surface becomes horizontal. The actual angle of the surface then is determined by noting the height of the gage block stack and computing the corresponding angle.

8.5.3.9 The inspection of gages with center holes can be greatly facilitated by the use of sine plates which have centers. When this is done the checker should adjust the centers of the plate snugly in the center holes of the gage. The gage is then checked for concentricity by rotating it under an indicator. A special sine plate with centers is shown on figure 140. A special feature of this plate is the overchanging stocks which hold the centers thereby reducing the weight of the instrument. Another advantage of this plate is that the rolls are held at the ends only and are locked in position by set screws. This makes it possible to reduce the effects of wear on the rolls by loosening a new position. The rolls should be checked for parallelism after an adjustment. Another special type of sine plate incorporates a chuck for holding the work. This type of sine plate is useful because it can be used for holding gages of unusual shapes which cannot readily be clamped to a tool maker's knee.

8.5.4 Light wave measuring equipment. It is known that in certain respects light behaves as if it traveled in waves. When the wave crests in one tiny beam of light are exactly alongside wave troughs of another tiny beam of light, the light waves neutralize each other and no light can be seen. The dark areas are known as interference bands.

8.5.4.1 This principle is utilized to measure errors in flatness, parallelism, and size of precision lapped surfaces.

8.5.4.2 In order to make such measurements, an optical flat is placed on the surface and viewed under light having one color or one predominant color. Such a light has only one wave length. The light from the helium tube generally used for this purpose has a wave length of 23.2 millionths of an inch. When one optical flat is placed over the test surface, two sets of light rays meet the eye, one set of rays being reflected from the bottom of the optical flat and the other set being reflected from the metal surface. The top flat is manipulated so that a wedge of air is present between the two surfaces. The distance between the bottom of the optical flat and the top of the surface increases continuously from the point of contact to the open end of the wedge of air. At the point where this distance equals one half of one wave length of light, the ray of light reflected from the blocks travels a distance of one wave length greater than the light reflected from the bottom of the flat. One might expect the waves from two sources to coincide, thereby building up a bright band of light. However, the light ray reflected from the block is reversed from the direction of its previous wave motion, so that the two sources of light are of opposite phase. In other words, the wave crests of one set of waves fall at the same point as the wave troughs oft he other set of rays, thus canceling each other to form a dark area, or interference band (see fig. 142). Whenever the distance between the two surfaces increase by an amount equal to one half the wave length of the light, the reflected light ray from the metal surface travels a distance which has been increased by the wave length of the light, and the wave crests and the troughs coincide so that whenever the distance between the optical flat and the surface being inspected changes by an amount equal to half the wave length of the light, an interference band is observed. Knowing the wave length of light emitted by the light source, we

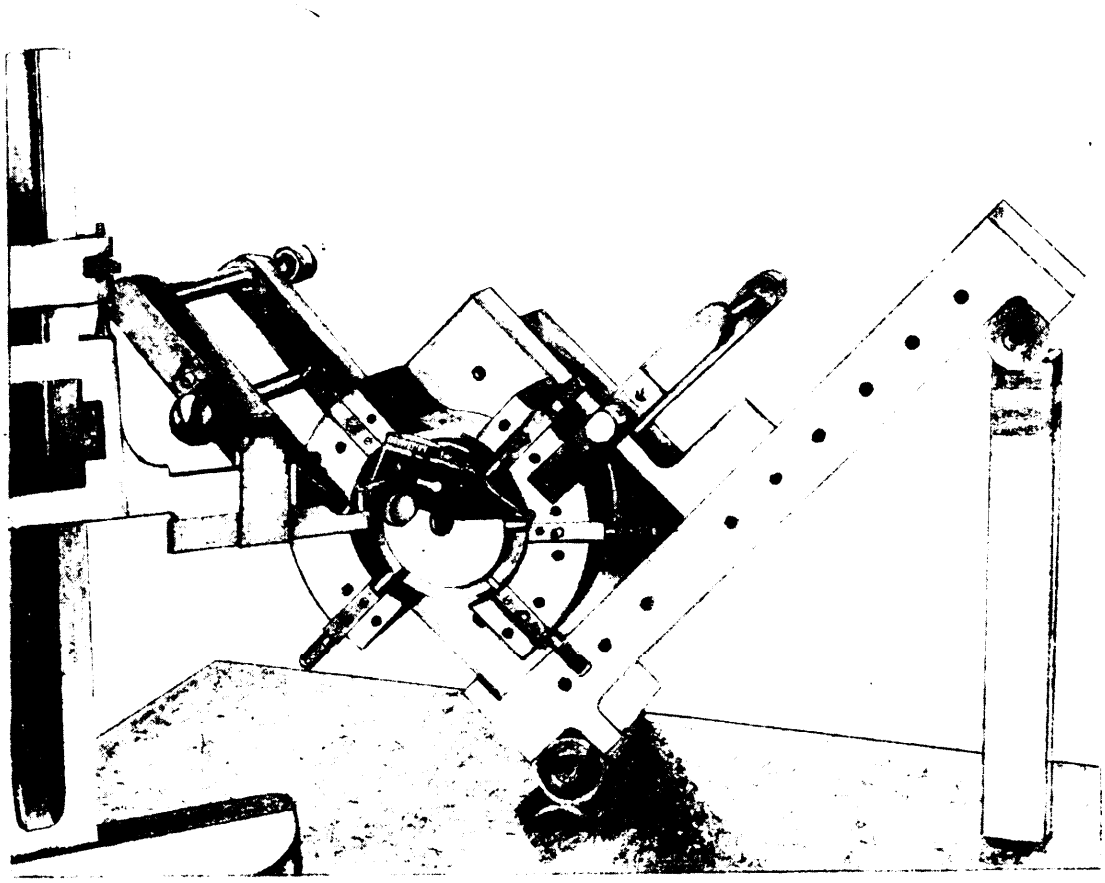

Figure 141. Use of sine plates.

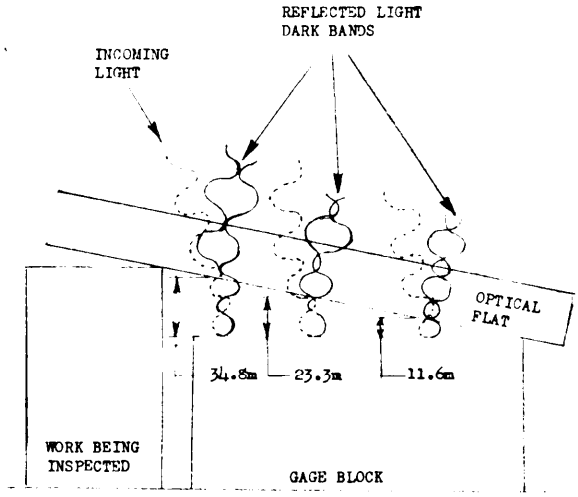

Figure 142. Measurement by means of light waves.

can use this principle to measure the difference in the height of two objects or to test the degree of flatness of a lapped surface. Optical flats are the most frequently used in gage laboratories for the measurement of flatness of very precise surfaces. For this purpose, the optical flat is placed on the surface and tilted enough to obtain about eight interference bands per inch of length. The curvature of the bands indicates the error in planeness of the surface. The error is computed by multiplying the displacement of the bands, in terms of bands by 11.6 millionths of an inch.

8.5.4.3 In the example shown on figure 143, the displacement amounts to about 1½ bands disregarding about $\frac{1}{16}$ inch of surface nearest

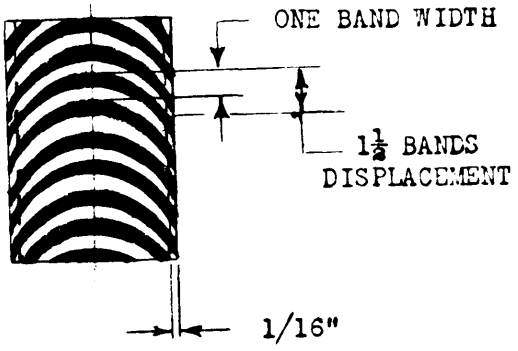

Figure 143. Computing error in flatness.

the edges. This portion of the surface is usually neglected in measuring flatness. Therefore, if the flat has been positioned to make contact at the front, or lower portion of the surface, the outer edges of the surface are about 17 millionths of an inch lower than the center. If the fiat has been pressed down at the back, or top, the pattern indicates that the edges of the block are about 17 millionths of an inch higher than the center. Figure 144 is an actual photograph showing the pattern obtained when there is wear at the center of a precision surface. In this case the displacement is equal to nearly two bands. Therefore, if the thin part of the air wedge is at the left side, the center of this surface has been worn about 23 millionths of an inch lower than the outer edges.

8.5.4.4 The optical flat is sometimes used to measure height by building a bridge similar to that shown on figure 145 in which a steel ball is being used to measure the diameter of an internal surface having a fairly small taper. The optical flat is particularly useful when a measurement under a light contact pressure is desired.

8.5.4.5 The simplest method of measurement is to vary the gage block combination until the least number of interference bands is found. The height of the point being measured is then the same as the height of the gage block stack to the nearest 0.00001 inch. Experts can use the interference method for measurements to an accuracy of plus or minus 10 millionths of an inch. To compare the over-all height of the steel ball and gage with a gage block combination as shown on figure 145 they are placed side by side on an optical flat and another optical flat placed over them. If the gage block combination is very nearly the same size as the height of the ball, interference fringes are then seen over the surface of the block when viewed normally in monochromatic light. For convenience in computing, the distance from the center of the ball to the near end of the gage block should be adjusted to equal the length of the face of the top gage block. The size of the gage block combination is preferably selected so that 4 to 10 fringes appear over the surfice of the top block. If the gage block combination is larger than the ball and gage the difference in height is equal to the number of fringes on the block and if the gage block combination is smaller than the ball and gage the difference in height is equal to twice the number of fringes. Whether the blocks are larger or smaller than the ball and gage is determined by applying a light pressure directly over the gage block. If there is little change in the number of fringes the gage blocks are smaller than the ball and gage and if the number of fringes decreases considerably the gage blocks are larger. On figure 145, for example,

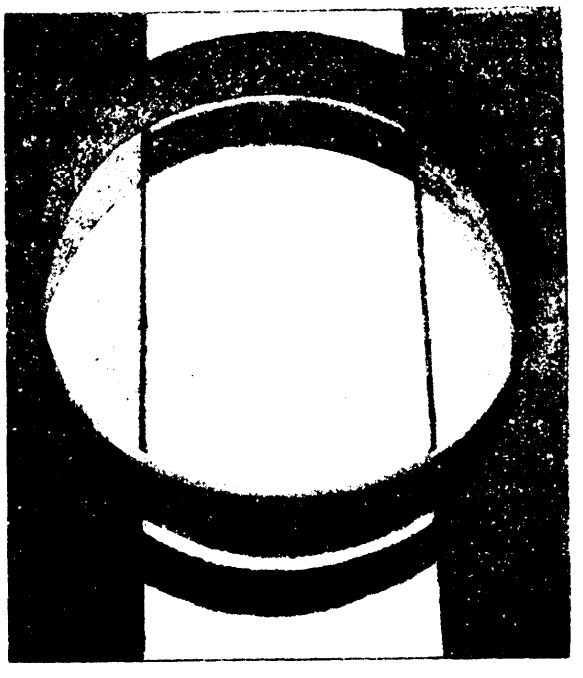

Figure 144. Interference pattern.

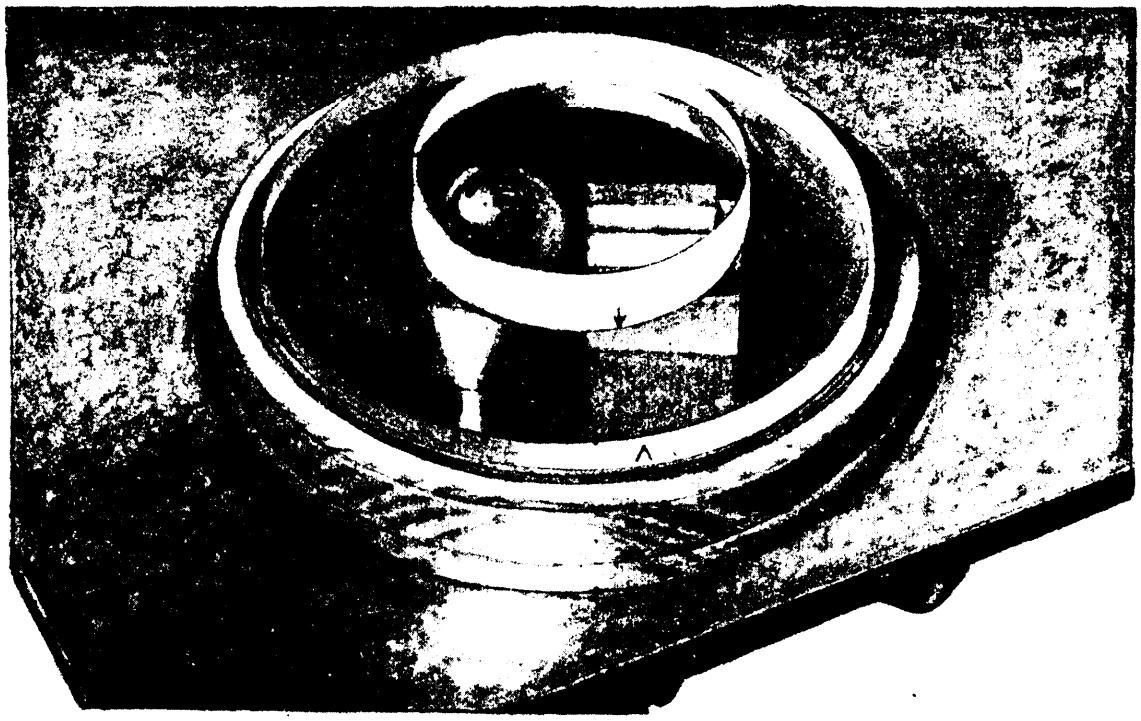

Figure 145. Measuring height with an optical flat.

there are 3¾ dark bands visible. If the flat is bearing on the ball and the near end of the gage block, the ball is 44 millionths lower than the gage blocks. If the flat is bearing on the ball and the far end of the block, the ball is 88 millionths higher than the gage blocks. This method is not recommended for beginners because it cannot be used successfully unless the inspector has had considerable experience with optical flats.

8.5.4.6 Optical flats generally are plane on only one side. This side is indicated by marking an arrow on the edge of the flat (see figure 145). Optical flats must always be placed so that the arrow points toward the working surface.

8.5.4.7 Bands should be viewed from a position as nearly as possible directly above the flat, since viewing the bands at an angle introduce errors.

8.5.4.8 The light wave micrometer is a bench micrometer which uses the interference principle to obtain measurements at a constant pressure. It can be used at any pressure from 0 to 1½ pounds (see fig. 146). The accuracy of this instrument is about ± 0.00003 inch, provided the lead screw calibration chart is used. It is used principally to measure small precision plugs and thread pleasuring wires.

Best results are with a light wave micrometer if it is placed on a flat surface, such as a surface plate.

8.5.5 Optical instruments.

8.5.5.1 Contour projector (optical comparator (see figs. 37 and 38)). Under normal working conditions, projectors can be used to an accuracy of about ± 0.0002 inch, when the perpendicular distance between two parallel surfaces is measured. It should be remembered that the error can be greater than this when measurements are taken between various points on angular or curved surfaces. Angular readings can be made to an accuracy of about ± 2 minutes, although the accuracy of angular measurements is dependent upon the length of measured surface as well as the accuracy of

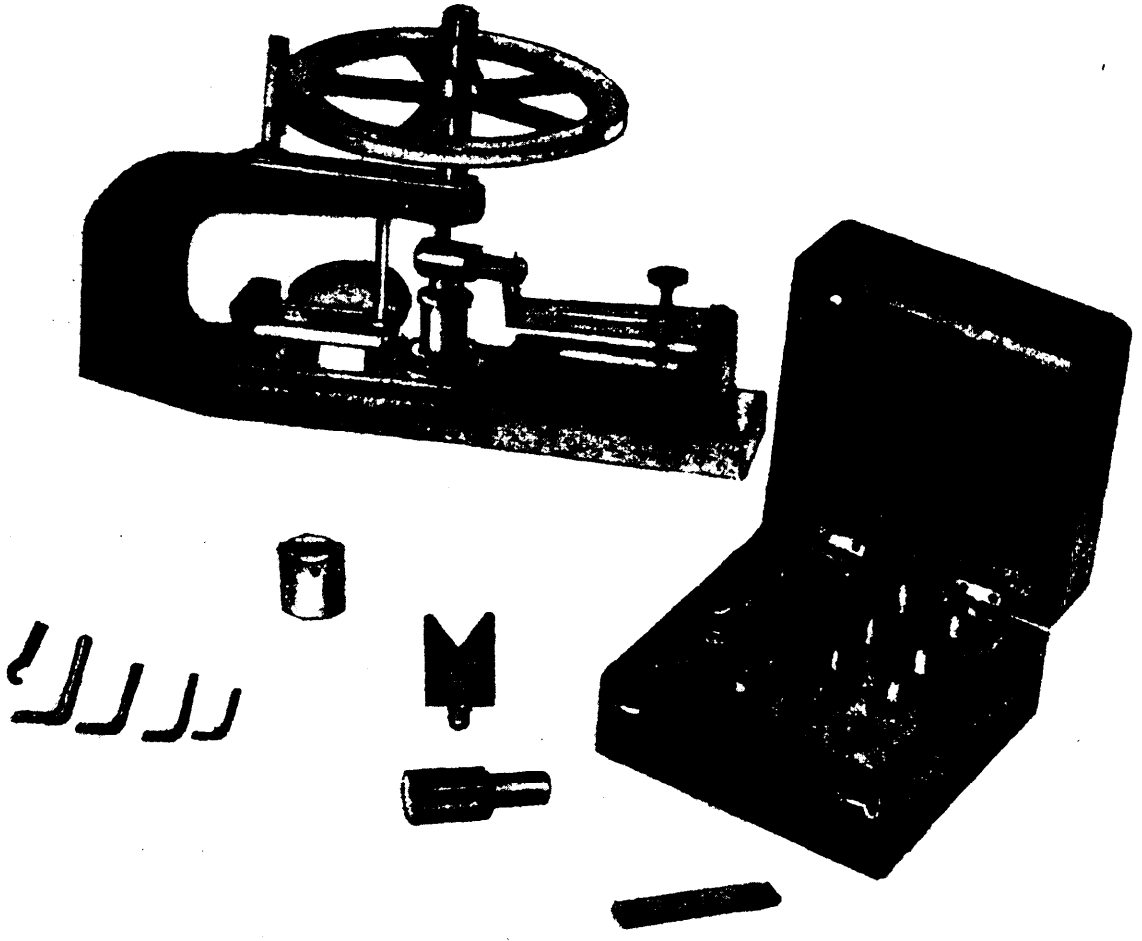

Figure 146. 0—2 inch light wave micrometer with roll anvil for calibrating measuring wires, 60 degrees "V" block for testing roundness, precision balls for checking flatness and parallelism of micrometer anvils, and cylindrical standards for calibrating micrometor screw.

the projector and the condition of the work. In general, the accuracy of a projector will decrease as the thickness of the work increases. The projector is most frequently used to measure dimensions between surfaces which are not easily accessible to micrometer anvils. It is also used to good advantage in checking irregular curved surfaces. Irregular curved surfaces are generally measured by drawing the outline of the gage accurately to scale on a piece of transparent material and placing this outline over the screen of the projector. The shadow of the gage under inspection is then compared with the outline of the screen. It is imperative that layouts for the projector be accurate. The transparent material used for a projector layout should be a specially prepared material which will not change in size when subjected to the heat of the projector.

Distances are measured with a projector by the use of tile micrometers which are incorporated in the supporting stage. The image of one of the surfaces or intesections between which measurement is to be made is located on a line of the projection screen. The position Of the screen must be adjusted so that this line is perpendicular to the distance to be measured. The supporting stage then is moved by advancing the micrometer until the image of the other surface between which the measurement is to

be taken falls on the line. The difference between micrometer readings before and after this operation will indicate tile desired length. Contour projectors, like micrometers, should be checked regularly against known standards. The checker should measure a plug of known diameter, using the built-in micrometer. In this way the most accurate alinement of the image with a line on the screen can be determined. Comparison with known standards is particularly worth while after adjustments of the lamp house lenses and shutters. When the projector is used for especially accurate measurements, the best procedure is to aline one of the surfaces with the line at the center of the screen. Then, instead of using the table traverse micrometer, place a gage block combination equal to the dimension being measured between the micrometer anvil and the lateral anvil spacing rod. Aline the other surface on the screen by adjusting the micrometer, and note the difference in the micrometer readings to obtain the deviation of the gage from basic size. This method eliminates errors due to any possible imperfections in the lenses and the micrometer lead screw. Do not change the magnification or the adjustment of the light source during measurement as this may introduce serious errors. Move the cross-slide table gently. Do not allow table mechanism to hit its stops sharply. "Bouncing" these parts not only is hard 011 the instruments but also causes inaccuracy in the measurements. When there is excessive reflection from surfaces of the piece being inspected, sharper definition can be obtained by reducing the size of the aperture in front of the lamp. Move the cross slide table from back to front and from left to right when using the micrometer attachments in order to eliminate the effects of backlash in the micrometer screw. A gage should not be left in the projector longer than necessary because the heat of the lamp will warm the gage causing it to expand. When a supplementary glass plate is placed over the screen of a projector, means other than tape should preferably be used for holding it in position. Tape tends to loosen and the plate may fall after it has become warm or after it has stood for a time. Mercury vapor type lamps should be left burning all day, regardless of whether the projector is used constantly or not because the lamp will last much longer if it is not turned on and off frequently, and because measurements will be more accurate if the projector maintains a constant temperature throughout the day. when a projector is used frequently, it will pay to construct a curtain somewhat like a shower curtain around the front of the projector and tile place where the operator stands. This will reduce outside light and improve the image on the screen. The roller bearings on which the table moves should not be oiled as oil tends to collect dirt, which interferes with the proper functioning of the bearings. Tile bearings will operate satisfactorily and will not rust if they are left dry. when the surface illuminator is being used for measurement from a recess to some other point on the gage, the definition of the edge of the recess will be made much sharper by filling the recess with common salt. If the contour of the recess at any given height is required, it can be obtained by filling the recess with salt to the appropriate level. After measurement has been completed, the salt must be completely removed, because it induces corrosion. The special fixture shown on the projector table in figure 147 has proven very useful in maintaining a fixed angular position when objects are moved to various positions on the table. It is also used as a rapid means of squaring gages with the centerlines on the screen.

8.5.5.2 Tool maker's microscope. The accuracy and the use of a tool maker's microscope (see fig. 39), corresponds quite closely to those of the contour projector. The microscope is sometimes assumed to be more accurate than the projector because it creates a sharper image. However, the sharpness is due mainly to the fact that the microscope usually has a lower order of magnification than the projector. It is particularly important to be sure the microscope proper is locked securely in place on the support column after each adjustment, or otherwise, it may be badly damaged by falling on the work. The fixture shown on figure 148 is a very useful accessory for a tool maker's microscope. It is used chiefly to position pieces where a number of the same size are being inspected. The fixture is clamped on the micro-

922173 O - 51 - 8

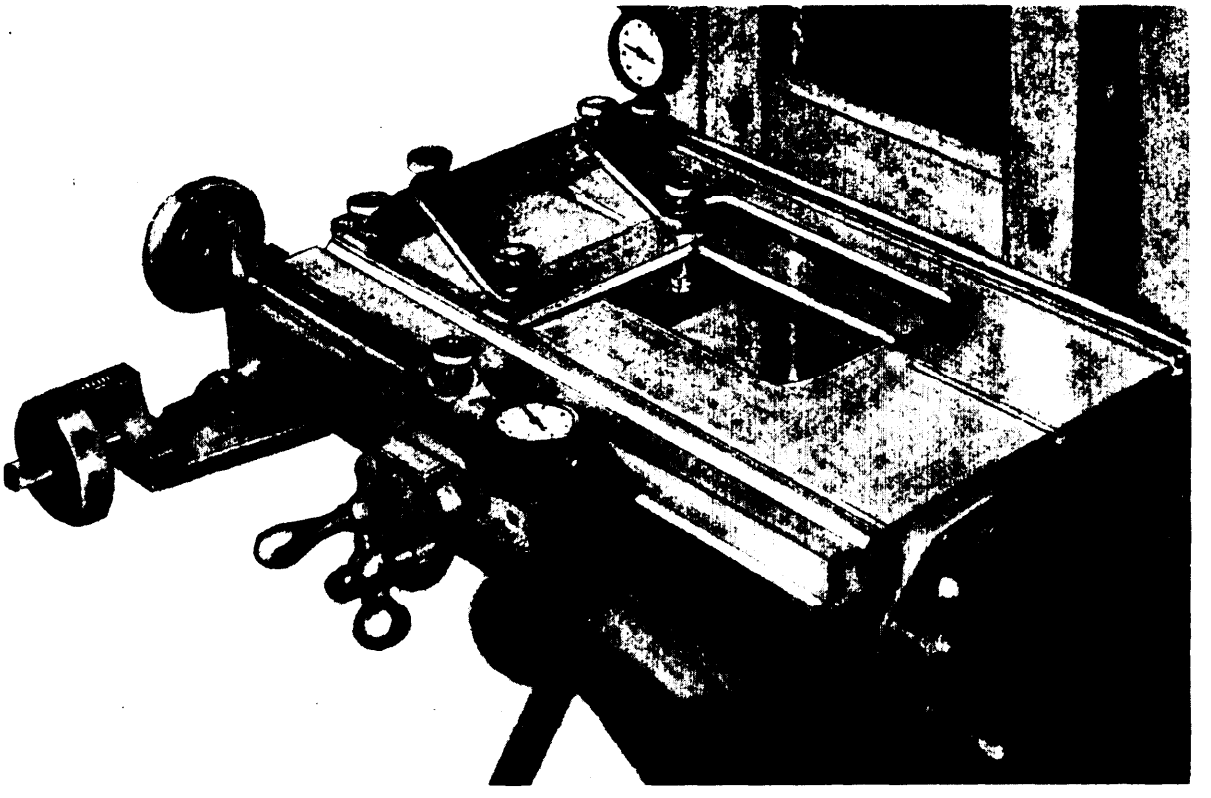

Figure 147. Alining fixture for projector.

scope just in front of the point where the gage would normally rest. If the gage has rectangular sides, gage blocks can be placed in the slots at the top of the fixture; and once proper adjustment has been made, additional gages can be rapidly alined for measurement merely by pressing them against the top of the fixture and the sides of the gage blocks. Round gages can be alined by means of the "V" slots.

8.5.6 Direct measuring equipment.

8.5.6.1 Supermicrometer. The supermicrometer (see fig. 31) can be used to an accuracy of about *0.00005 inch for average sizes of work. For extremely long dimensions, the accuracy of the measurement is limited by the accuracy of the disks used for setting the instrument. For small gages where the length is less than 2 inches, the instrument is suitable for checking gages having tolerances from 0.0002 to 0.0015 inch. For greater lengths, of course, suitable tolerances are proportionately greater. The following precautions should be observed each time the supermicrometer is used:

Figure 148. Positioning fixture for tool maker's microscope.

a. Check measuring pressure.

b. Clean the anvils by drawing a piece of hard finish paper between them under pressure. Back off the anvil before removing the paper to prevent pieces of lint from being left on the anvils.

c. If the checker is not certain of the condition of the anvils, he should place a precision ball between them and measure it in several positions to make sure the anvils are flat and parallel. When very small plugs are measured, or when measurements are made over thread measuring wires, it is best to make this

check with a small wire. If the anvils are worn, they should be lapped with the lap and lapping solution provided by the manufacturer. If the supermicrometer is used constantly, the anvils should be lapped at least once a day. Bench micrometers and other precision measuring instruments should preferably be set by means of reference gages which simulate the form of the work to be inspected. For measurements over flat surfaces, the proper settings of the instrument is established by means of gage blocks. For measurement over cylindrical surfaces, the setting of the instrument is established by means of master disks. For extremely accurate measurements the machine should preferably be set with gage blocks or disks approximately the same size as the gage in order to reduce the effect of lead errors in the micrometer screw. In setting an instrument by means of gage blocks. be sure that both the anvils and the blocks are absolutely clean. Slide the blocks between the anvils enough to get a wringing fit but do not slide the blocks around any more than necessary. The practice of setting a micrometer by bringing the anvils together is unsatisfactory because it does not simulate a gage between the anvils, and because it is not possible to detect the presence of dirt. A useful trick method of setting a machine when measurement is to be made over rolls is as follows:

Place a gage block (or master disk if a plug is to be measured) and two rolls between the anvils as shown in figure 149. Without regard to the actual size of the rolls, assume that the diameters are exactly nominal and set the machine to give a reading equal to the sum of the length of the block and the nominal diameters of the two rolls. Measurements are then made over the rolls in the customary fashion, using the nominal diameter of the rolls in making computations. Any difference between the actual diameter of the rolls and their nominal size will be exactly compensated by the original setting of the machine. For example, if each of the rolls happened to be 0.0001 inch under size, the machine would have been set to read 0.0002 inch more than the true value of the actual measurement. This will exactly compensate the error of 0.0002 inch in the actual measurement. This method is useful for measurements over straight surfaces and slight tapers, but it will not be accurate. for measurements over steep tapers. The advantages of this system of setting the instrument are that the conditions more nearly corresponding to those of actual measurement, and errors in calibrating the rolls will not be introduced into the measurement. A supermicrometer with which the operator is not familiar, or on which elevating table has been moved, should be checked for squareness of the table with the faces of the measuring anvils. Squareness may be checked by measuring cylindrical square while it is standing upright on the elevating table repeating the measurement when it is lying on the elevating table in a position to aline itself with the anvils. The difference in the two measurements, if any, will indicate an error in the elevating table. Inspect the gage to be measured and remove all burrs or other imperfections which might interfere with the measurement or damage the anvils of the supermicrometer. Place the work between the anvils and advance the screw until the tailstock indicator is on the zero point. If the piece is light enough to be supported by the pressure of the anvils, the elevating table should be lowered from the work to permit proper alinement between the anvils. If the gage is too heavy a small piece of drill rod or some other round object may be inserted between the gage and the elevating table to permit alinement (see fig. 162). Shift the gage about between the anvils and note whether the reading stays constant. This will eliminate errors caused by dirt or by small imperfections on the surface of the gage. Record the observed reading. Generally, for gages which

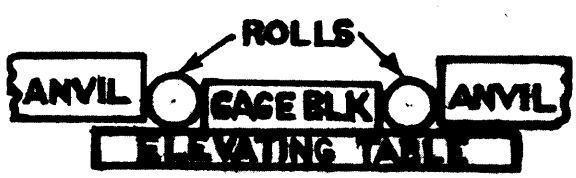

Figure 149. Setting up bench micrometer for measurement over rolls.

have external gaging surfaces, the recorded measurement should be the maximum obtained at any point on the surface since this is the point which will make contact with the component. For example, if a plain plug gage is out-of-round, the largest diameter will bear on the component and determine, for all practical purposes, the size of the component.

8.5.6.2 Universal measuring m a c h i n e. The universal measuring machine (see fig. 32) can be used to an accuracy of about ± 0.00002 inch. It is used to measure large dimensions in cases where a relatively high accuracy is required and to measure small dimensions where the tolerance is less than 0.0002 inch. When small dimensions are to be measured to a high accuracy, it is best to set the instrument with gage blocks or disks equal to the basic value of the required dimension in order to eliminate lead screw errors. For very precise measurements the gage should be allowed to stand in the machine to come to temperature. This need not be done unless great accuracy is required. This instrument will accommodate work of various lengths by moving the headstock. The headstock can be located accurately without the use of gage blocks by alinement with reference lines on a master bar with the attached microscope. This method is particularly useful when large dimensions are to be measured. The position of the tailstock can be checked by locating the headstock at the 1-inch mark, placing a l-inch gage block between the anvils, and adjusting the position of the tailstock until the milliammeter reads zero. The index for the hand wheel should be set at 1-inch. The elevating table should be used with caution for the measurement of tapered gages or other operations in which parallelism of the table is important. If the elevating table is not properly alined, the desired set-up often can be obtained by placing the gage on parallels placed directly on the bed of the machine. In other respects the measuring machine is used like a bench micrometer.

8.5.7 Mechanical and electrical comparators. This group comprises a large variety of instruments which do not record measurements directly but which indicate the variation from a given dimension as established by gage blocks or other setting gages. Their principal use is checking lengths and diameters where several gages of the same size are to be inspected. However, they can also be used to check individual dimensions when direct measuring equipment is not available, or in the case of the best comparators, where extreme accuracy is desired. The following are the principal types of comparators:

8.5.7.1 Metron gages. This type (see fig. 150) is available with magnifications varying from 100 times to 100,000 times. The scales are graduated in units of 0.001 to 0.000001 inch. Each comparator wil1 operate at four different orders of magnification depending on the position of switches. Other features of this instrument are a pressure regulator. permitting select ion of any measuring pressure between 2 ounces and 2 pounds, means for tilting the measuring head to any angle, and means for swivelling the measuring head about the support column.

8.5.7.2 Electrolimit gages. Various models of the electrolimit gage (see fig. 151) pro-

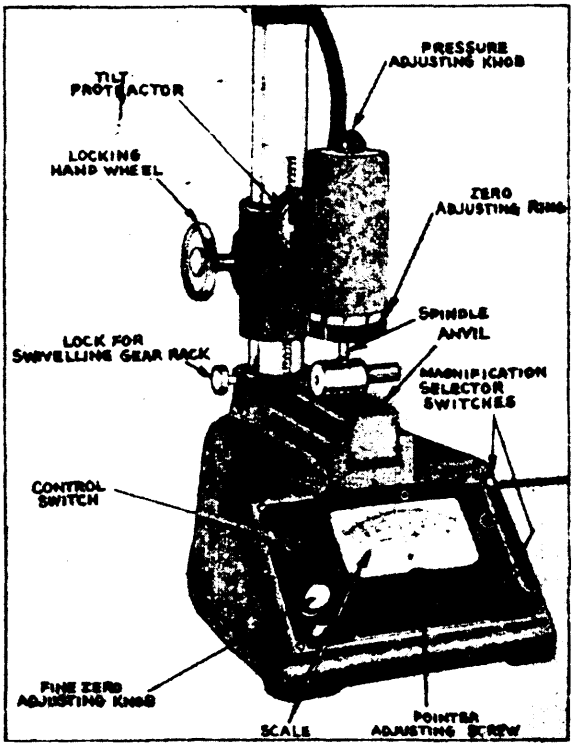

Figure 150. Metron comparator.

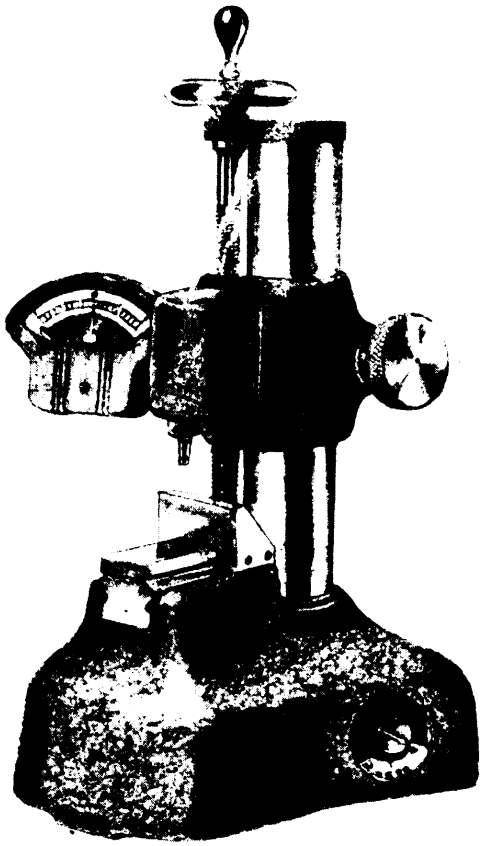

Figure 151. Electrolimit comparator.

vide magnifications between 750 times and 22,500 times. The corresponding scale graduations are 0.0002 and 0.000005 inch. The gaging head of this instrument can be swivelled. A large variety of special gaging heads and anvils are available for special jobs. A gage for tile measurement of close tolerance internal diameters of ¼ inch or more is also manufactured. A special form of this gage is the electrolimit height gage (see fig. 152). This gage, or a gage of equivalent accuracy, is the preferred means for checking locations where the tolerance is 0.0003 inch or less. Voltage or frequency regulation of the supply current may affect measurements with these comparators. Electrical input characteristics unfavorable to the instrument can be detected by fluctuations in setting after temperature equilibrium has been attained.

8.5.7.3 Visual gages. The visual gage (see fig. 34) is available with magnifications varying from 500 times to 20,000 times. The corresponding graduations are 0.0001 and 0.000002 inch. The gaging heads can be swivelled. A special model of this comparator embodies a pressure regulator (see fig. 153) used with the

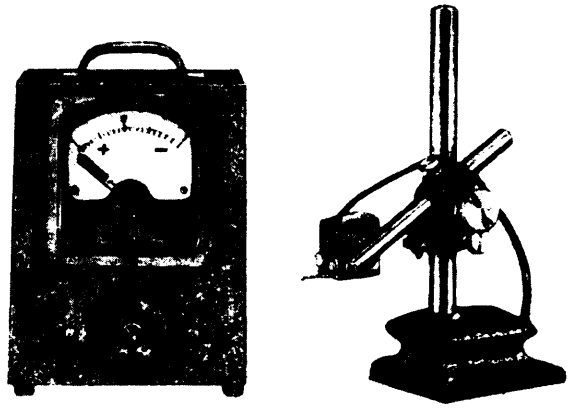

Figure 152. Electrolimit height gage.

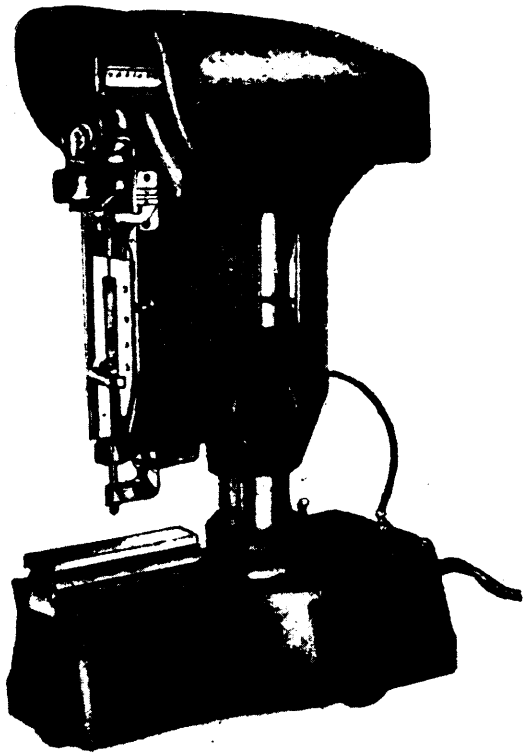

Figure 153. Pressure regulator for use with visual gage thread checking attachment (cover removed to show construction).

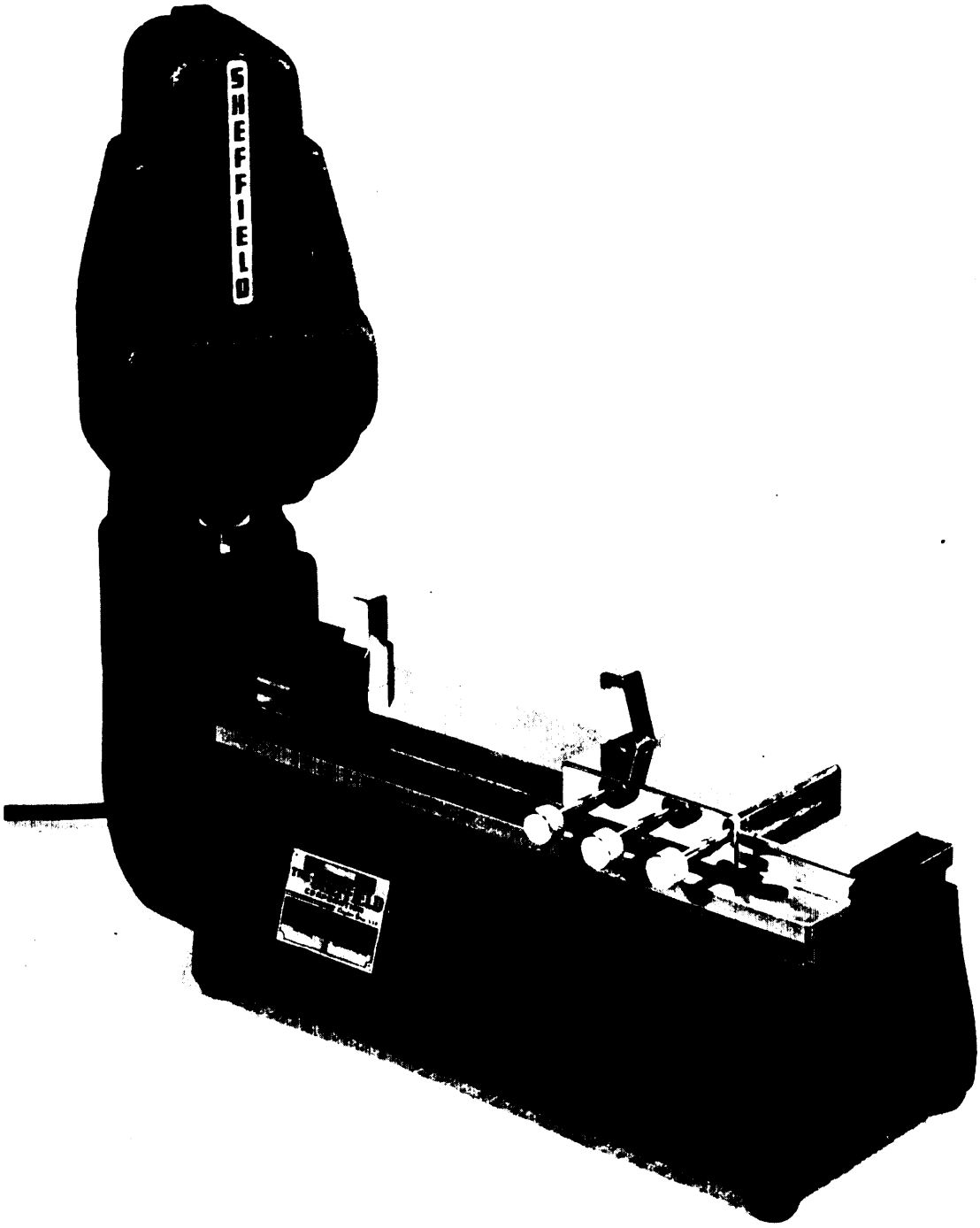

Figure 154. Universal external visual gage.

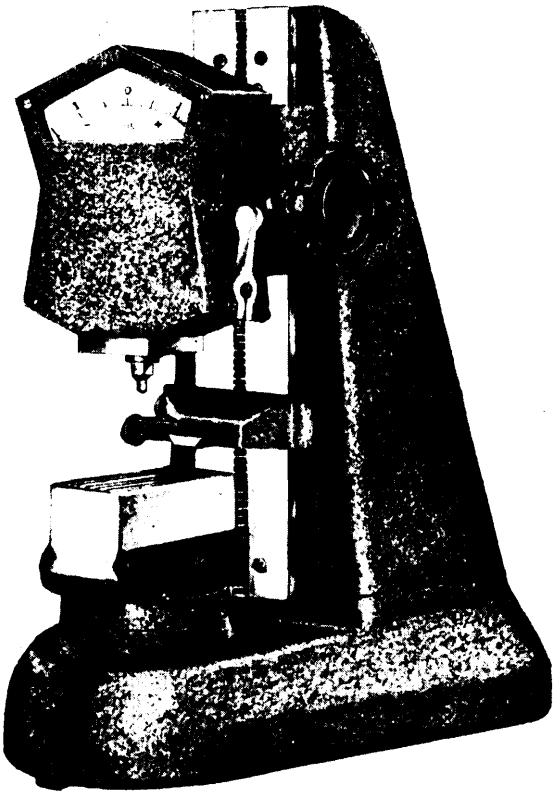

Figure 155. Supersensitive comparator.

special spindle attachment in the rapid inspection of thread plug gages. Some models of this gage are constructed with special types of gaging members to permit the measurement of close tolerance internal diameters. Other models having horizontal gaging members for measuring plain and taper plugs with precision rolls are also available (see fig. 154).

8.5.7.4 Supersensitive comparator. This gage (see fig. 155) is a very accurate indicating unit. The scale is graduated in units of 0.0001 inch. Similar units are available having a dual or variable magnification.

8.5.7.5 Dial comparator. A dial indicator-type comparator (see fig. 156) is commonly known as a dial comparator. The dial is graduated in units of 0.0001 inch. This instrument incorporates an adjustable swiveling gaging head and an adjustable back stop. The table supporting the anvil can be swung to permit side entry of the work.

8.5.7.6 Dial bore gage. This is an indicator-type comparator (see fig. 157) for checking internal cylindrical surfaces. The dial is graduated in units of 0.0001 inch. These gages are available in sizes suitable for measuring all internal diameters between 0.122 to 12½ inches. The insert in the upper left of figure 157 shows how the gage is set by means of a ring gage. The gage can also be set with gage blocks and internal jaws. The instrument and the blocks can be alined more easily if both the end of the instrument and the sides of the blocks are rested on a flat surface when this adjustment is made. The insert on the lower right of figure 157 shows a series of extensions used to adapt each gage for various sizes of work. This gage should be checked occasionally to make

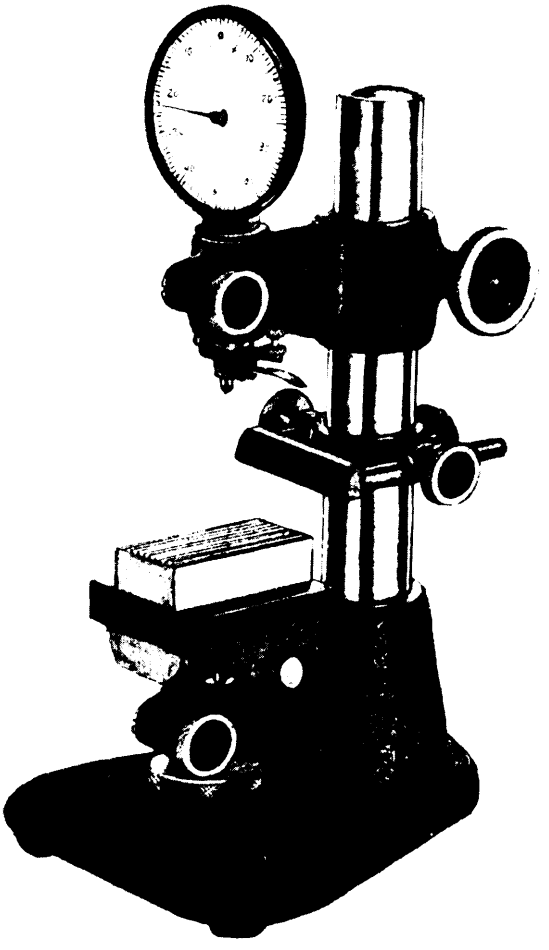

Figure 156. Dial comparator.

sure that no flat spots have been worn on the contacts.

8.5.7.7 Using comparators. The following steps should be taken in using mechanical and electrical comparators:

a. When rounded surfaces are inspected, or when measurements are taken over wires, a spindle with a flat gaging surface should be used and when flat surf aces are inspected the spindle with a spherical gaging surface should be used. The stationary anvil should be wide enough to prevent any rocking of the work.

b. Clean the anvil and spindle with hard surface paper or with a chamois. It may occasionally be necessary to wash them with solvent.

c. The anvil should occasionally be checked for wear with an optical flat. The error in the flatness of the anvil should be considerably less than the accuracy of the instrument.

d. Set the instrument with size blocks, precision roll, or setting gage.

e. Pass the work between the anvils. The highest reading of the scale indicates the size. The work should not be allowed to tip or be moved too rapidly as this may result in a damaged spindle or false readings.

f. When a large number of gages of the same size are inspected the instrument should be checked frequently for proper setting. It also should be checked for proper setting after the job has been completed in order to be sure no defective gages are accepted.

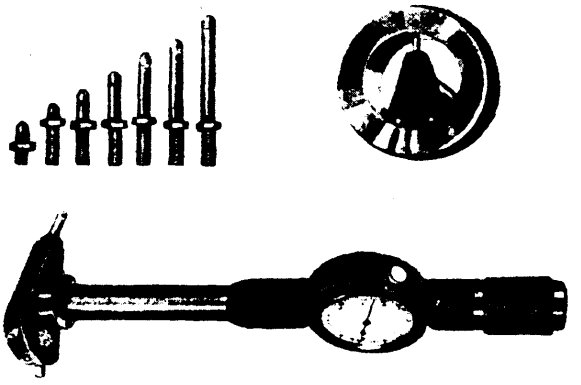

Figure 157. Dial bore gage.

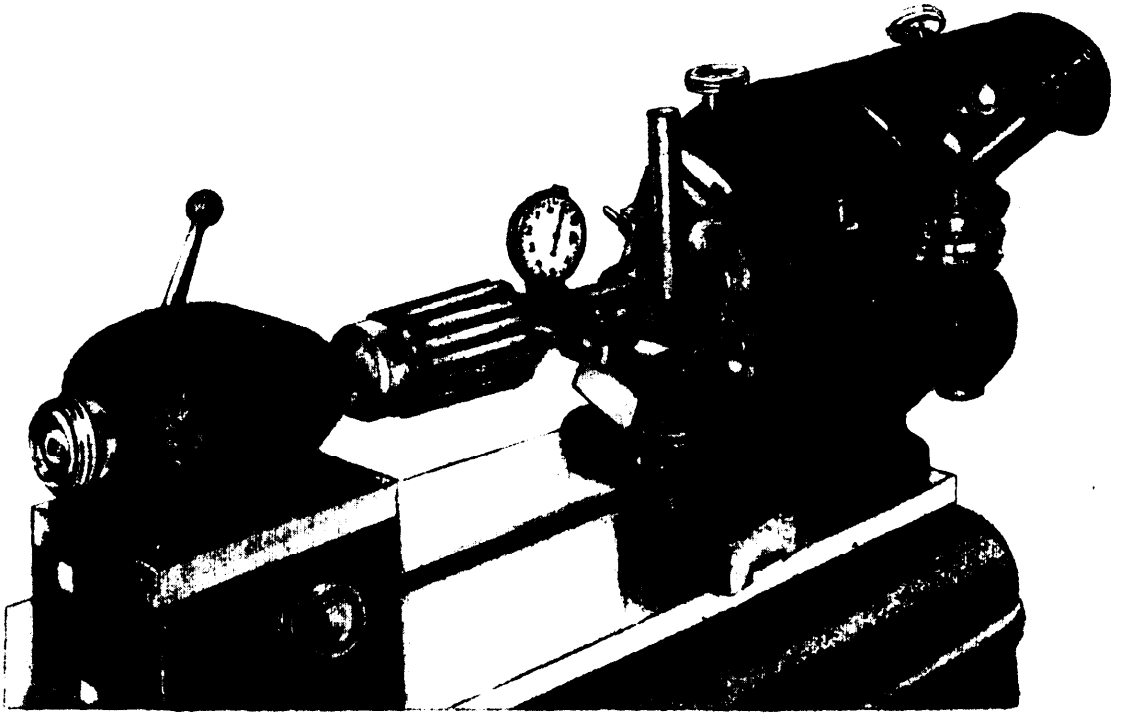

Figure 158. Precision indexing head.

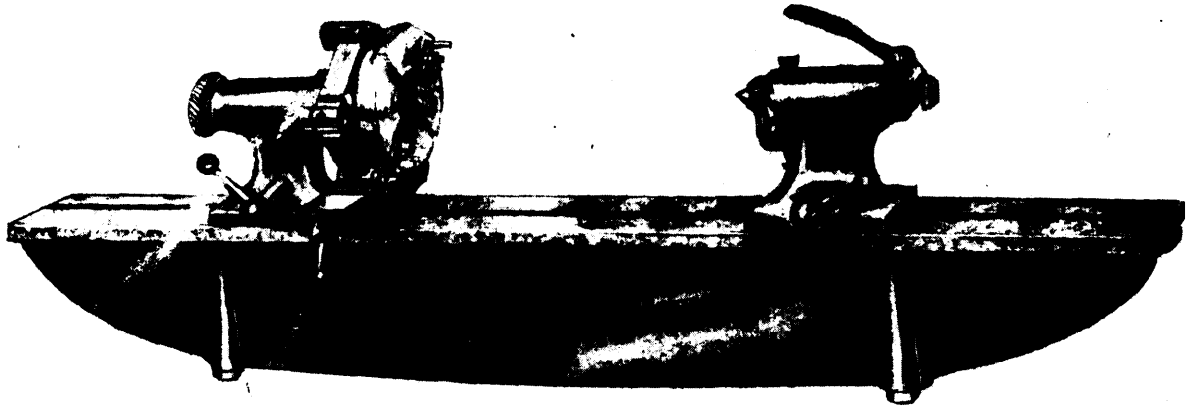

Figure 159. Bench center with sine bar indexing face plate.

8.5.8 Indexing equipment.

8.5.8.1 Precision indexing head. The precision indexing head (see fig. 158) is a very accurate device for measuring angles. The head can be set at any given angle to an accuracy of 2 seconds of arc. The instrument can also be used to particular advantage when it is necessary to measure large angles and when there are several different angles to be checked on the same gage.

8.5.8.2 Bench center with sine bar indexing face plate. This device (see fig. 159) incorporates a square, rotating face plate on which are mounted four precision rolls located equidistant from each other on a 3 inch radius. To use the instrument, the centerline of the headstock is determined by clamping the base provided with the instrument or a parallel bar to the bed and inserting gage blocks between the base and rolls until two diagonally opposite rolls are equidistant from the base. The desired angle then can be constructed by multiplying the sine of the angle by three, and adding this amount to the height of the gage blocks which stand level with the centerline. The face plate then is rotated until the appropriate roll is in firm contact with the stack of blocks. The accuracy of this device is somewhat less than that of a 3-inch sine bar for angles less than 45 degrees, and somewhat greater than the 3-inch sine bar for angles greater than 45 degrees. This instrument can be used to particular advantage when it is necessary to establish large angles and when there are several different angles to be checked on the same gage.

8.5.9 Hardness tester. Gages may be checked for hardness on a Rockwell hardness tester (see fig. 160), or equivalent, using the "N Brale" penetrator. A 15-kilogram major load should be used on lapped surfaces, and a 30-kilogram major load should be used on ground surfaces. Rough ground surfaces and coarser surfaces should be checked on a Rockwell hardness tester, or equivalent, using a 90-kilogram major load. If this instrument is not available, the superficial tester may be used with a 45-kilogram major load. For case hardened gages, the superficial hardness tester should be used with a 15-kilogram major load.

8.5.9.1 The following steps should be taken in using the hardness tester:

a. Turn the crank handle (6) forward (counterclockwise) as far as it will go, thereby lifting the weights.

b. Be sure the surface of the gage which is to rest on the anvil of the tester is free from all dirt, scale, and burrs.

co Place the gage securely upon the anvil (1).

d. Elevate the gage and table by rotating the capstan (2) until it comes in contact with the penetrator, and then further until the small pointer (8) of the indicating gage is nearly vertical and slightly to the right of the dot.

e. Turn the zero adjuster (3) until the "set" arrow on the dial is exactly back of the pointer (5).

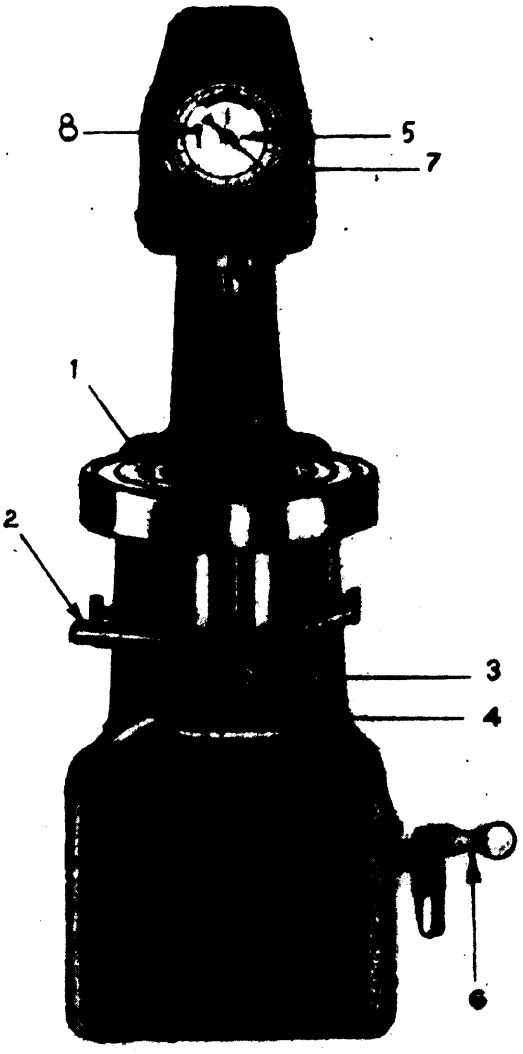

Figure 160. Rockwell hardness tester.

f. Push down on the presser bar (4) to apply major load.

g. Watch the crank handle (6) until it comes to rest. This indicates the major load has been fully applied.

h. Pull crank handle (6) forward, lifting major load but leaving the minor load still applied.

i. Read Rockwell hardness number on dial (7).

8.5.9.2 Since hardness specifications on gage drawings generally are expressed in terms of the Rockwell "C" scale, readings obtained on the "N" scales must be converted to the equivalent value on the "C" scale. A table of equivalent value is given in 8.27.5.

8.5.9.3 Hardness measurements should be made on the gaging surface when practical and as near the gaging surface as possible in other cases. However, when the metal at the gaging surface is thin enough to flex under the applied load (as in the instance of screw threads) this practice should not be followed because a false reading would be obtained. In such cases tile check should be made on a surface adjacent to and as near the gaging surface as possible.

8.5.9.4 A false reading is sometimes obtained on cylinders ⅛ inch or less in diameter because the "V" in the anvil and the diamond brale are not in line, permitting the work to roll when pressure is applied. It is essential that the brale and the "V" are properly alined.

8.6 GAGE INSPECTION OF PLAIN PLUG GAGES

8.6.1 Measurement with a bench micrometer. If the tolerance is between 0.0002 and 0.001 inch, inspection of a plug gage can best be made with a bench micrometer (for example, the supermicrometer). The proper steps are as follows:

a. Set the pressure adjustment for l-pound pressure unless the plug is quite heavy (3 inches or more in diameter). In the latter case, use 2½-pound pressure. If the plug has been calibrated at some specific pressure, use the pressure of the previous calibration.

b. Clean the anvils and check the adjustment of the instrument in accordance with 8.5.6.1.

c. Check the gage for visual defects and remove all burrs which might interfere with measurement. Be sure the contact surface is absolutely clean.

d. Place the plug on the elevating stage, bring the anvils in contact with the front end of the plug and move the plug about a little to be sure that no dirt or uneven spots interfere with the measurement.

e. If the pressure of the anvils will support the gage, lower the elevating table so that the plug is held only by the anvils (see fig. 161). If the plug is too heavy to be supported in this manner, it can be placed horizontally on the elevating table so that it rolls freely under the

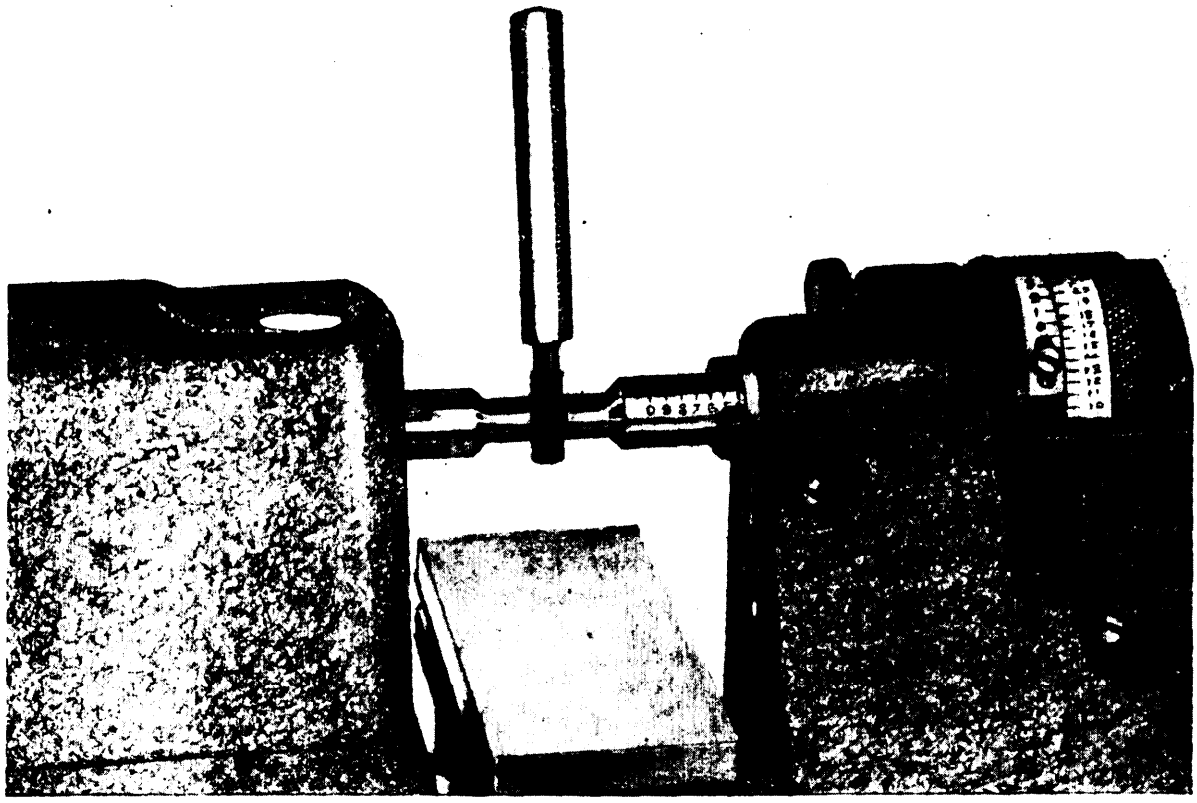

Figure 161. Measuring small plug gages.

pressure of the anvils permitting self alinement (see fig. 31). If the gage is extremely large, a cylindrical piece about ¼ inch in diameter should be placed between the plug and the elevating table to permit alinement of the plug (see fig. 162).

f. Rotate the plug 90 degrees and take another measurement. In general, pieces should not be moved between the anvils of precision measuring equipment without removing the pressure. However, it may be done by a bench micrometer if the gage has a good finish and the anvils of the micrometer are relapped frequently enough to keep their faces flat. Generally it takes less time to relap the anvils occasionally than it does to back off the anvils each time a reading is taken.

g. Measure the diameter at the center of the plug and at the back of the plug to check for taper. The diameter of the plug should not exceed the specified limits at any point along the axis. If the permissible variation in taper is given on the gage drawing or if there is some functional characteristic which requires that the taper be held more closely than would be indicated by diametral limits, these considerations should govern the acceptability of the gage.

h. The maximum reading obtained in making all the measurements described above should be recorded as the diameter of the gage.

i. A method of checking plug gages for wear is described in 8.24.

8.6.2 Measurement with a mechanical comparator. If the gage tolerance is between 0.0002 and 0.001 inch and several gages of the same size are to be checked, the inspection can conveniently be made with a mechanical comparator which reads directly to 10 thousandths of an inch and on which hundred thousandths of an inch can be estimated. This method is particularly suitable where several gages of the same size are to be measured. The steps in this operation are as follows:

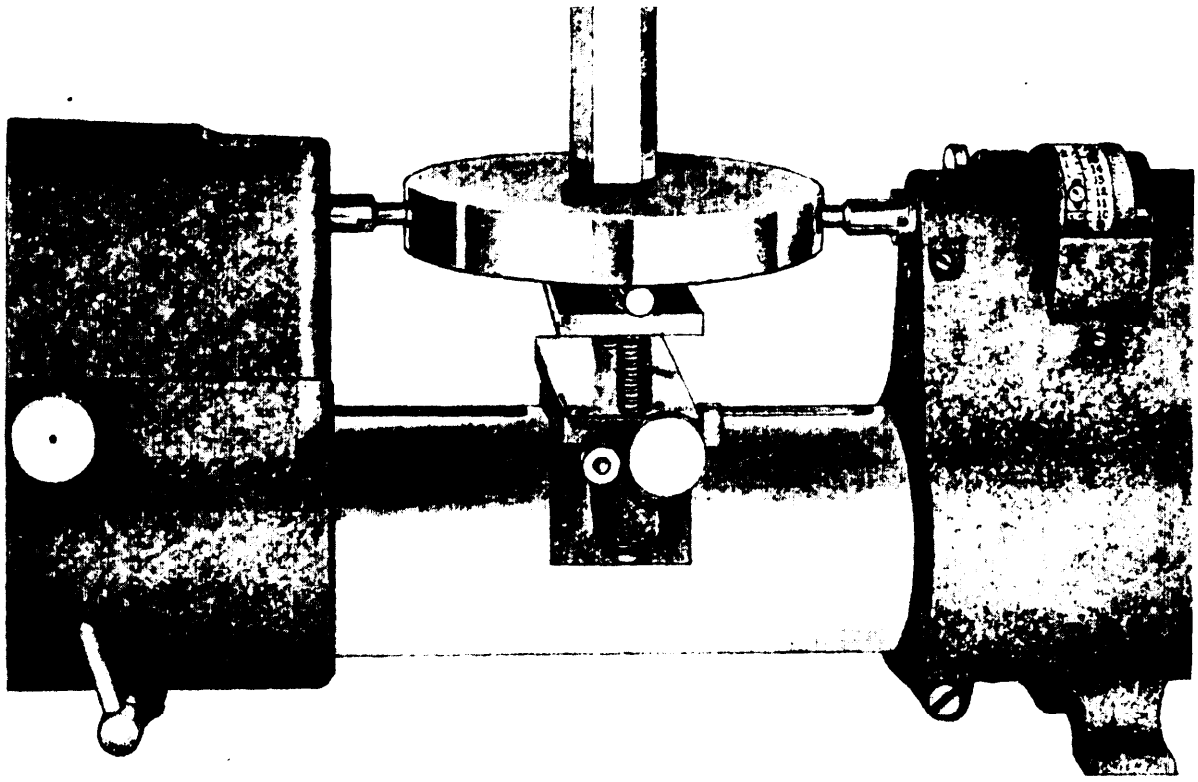

Figure 162. Measuring large plug gage.

a. Clean the gaging members by wiping them with hard finish paper or chamois.

b. Set the comparator with gage disks.

c. Place the plug on the anvil and roll it under the spindle. Rotate the plug and roll it under the spindle again in a position to obtain a measurement about 90 degrees from the first measurement. Great care should be taken not to tip the gage on the anvil. The anvil should preferably be as wide as the gage is long except for gages over 4 inches long.

d. The diameter should be measured at the front, center, and back to determine taper. The diameter of the plug should not exceed the specified limits at any point along the axis, as previously explained.

e. As previously stated the diameter of the gage should be the maximum reading obtained in all of the measurements described above.

f. The setting of the comparator should be rechecked with a gage disk at frequent intervals, If an appreciable change in setting occurs all gages checked subsequent to the previous setting of the instrument should be reinspected.

g. The anvil of the comparator should be checked occasionally for flatness by means of an optical flat or by measuring the height of a roll placed in several different positions on the anvil.

8.6.3 Measurement with a precision measuring machine. Gages with a tolerance of less than 0.0002 inch or which have unusually large (dimensions should be inspected in a precision measuring machine which reads directly to 0.0000l inch. The methods of alining gages in this machine are similar to those employed with a bench micrometer.

8.7 INSPECTION OF TAPERED PLUGS

8.7.1 Measuring straightness and angle of taper. Where the tolerance for the included angle of a gage is greater than 20 minutes, it may be checked by placing the plug between the centers in an optical comparator (contour projector), adjusting the screen so that one of the lines is parallel to the side of the plug, and

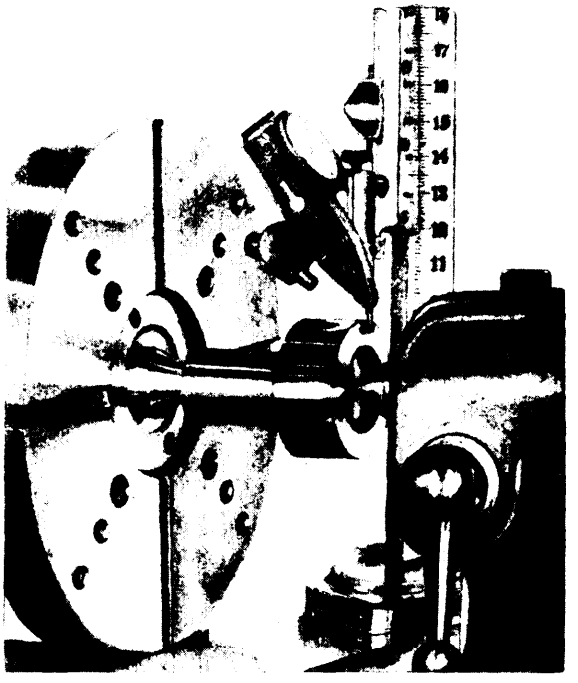

Figure 163. Checking front face of plug for perpendicularity.

reading the vernier angle scale at tile side of the screen.

8.7.1.1 More accurate results can be obtained with a sine bar or plate but for small lots more time is required than when the optical comparator is used. In general, the sine bar is satisfactory for all taper gages having a tolerance on diameter of 0.0002 inch or more. The sine bar is of particular value when a large number of gages is to be checked, due to the saving in time. When measurements are made by this method. it is essential that the axis of the gage be parallel to the long sides of the sine bar or sine plate. When a sine plate is used this can be accomplished by alining an end of the gage with the heel or flange of the plate provided the surface used is perpendicular to the axis. (Use a method similar to that shown on fig. 163 for this cheek.) If the back face is not perpendicular, it may be possible to devise a support such as parallels clamped to an angle plate to keep a finished cylindrical portion of the gage in line with the sides of the sine plate.

8.7.1.2 A set-up for measuring a taper by means of a sine plate is shown in figure 164. The sine plate is set to the included angle of taper and the gage placed in the position shown. The gage must be constantly pressed against the roll and the flange at the top of the plate by means of the hand.

8.7.1.3 An indicator is used to measure the height from one end of the gage to the other. Irregular variations in the indicator reading indicate errors in the uniformity of taper and the difference between the readings near the end is a measure of the error in taper. The indicator should contact the high point of the gage whenever a reading is taken. This method is best suited for plugs whose included angle is less than 45 degrees. The special fixture shown on figure 165 will effect considerable saving in time when several tapered gages of the same size are to be checked. The supporting means make it possible to aline the axis of the plug with the center of the sine plate more accurately and dependably than would otherwise be possible.

8.7.1.4 Another way of measuring the taper of plugs is by measurements over rolls as shown on figure 166. This method is precise and dependable and should be used when the tolerance on taper is very small. However, the rolls make point contact with the gage and minor surface irregularities may lead to erroneous re-

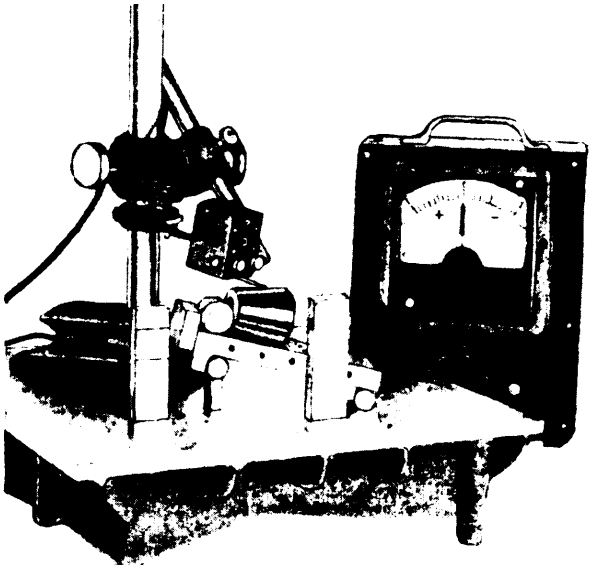

Figure 164. Checking taper on sine plate.

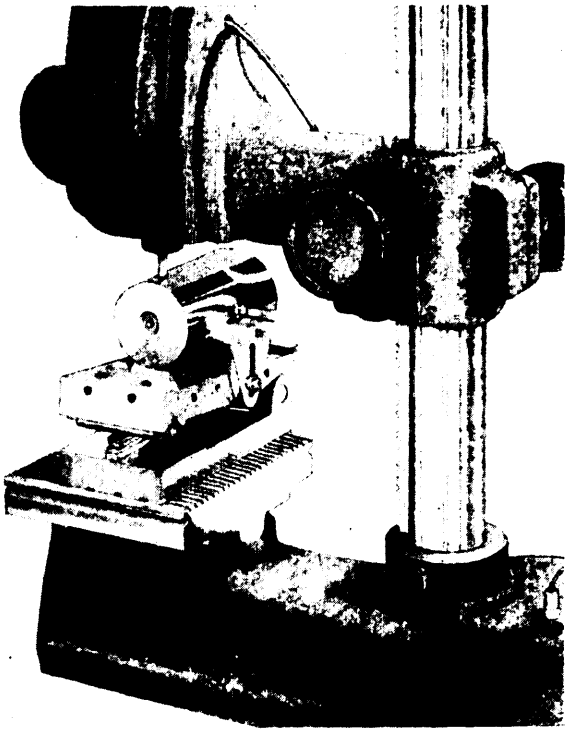

Figure 165. Measuring taper on special sine plate fixture.

suits unless the checker observes the precaution of rotating the plug small amounts and noting any variation in size. If there is no variation in size the checker will know that the measurement is true.

8.7.1.5 The first step in using this method is to mount the gage between centers and rotate it with the ball point of an indicator against the face in order to check the squareness of the front face with the axis of the gage (see fig. 163). At the same time the inspector should check the tapered surface for concentricity with other precision surfaces on the gage.

8.7.1.6 If the face of the gage is not perpendicular, an error of 0.010 inch per inch of diameter in total indicator variation causes an error in diameter of approximately 0.00005 inch. This relationship is true for all moderate tapers but not for tapers where the included angle is greater than 30 degrees. Proportionate variations in indicator readings give proportionate errors. For example, if the indicator variation is 0.016 inch when the indicator contact point is held near the outside diameter of a plug 1 inch in diameter, the error in computing diameter will amount to 0.00008 inch. A diameter half as large would have twice the error and a diameter twice as large would have only one half the error.

8.7.1.7 In general, it is not necessary to consider errors in squareness of the end unless the resultant error in the diameter, as computed by the method specified in 8.7.1.6, is greater than 10 percent of the gage maker's tolerance, In borderline cases where a dimension approaches the gage maker's limits the error should be taken into account except where it is less than 50 percent of the possible error in the measurement.

8.7.1.8 Error in squareness of the face of the gage may also be determined by measuring over the gage with one large and one small roll and

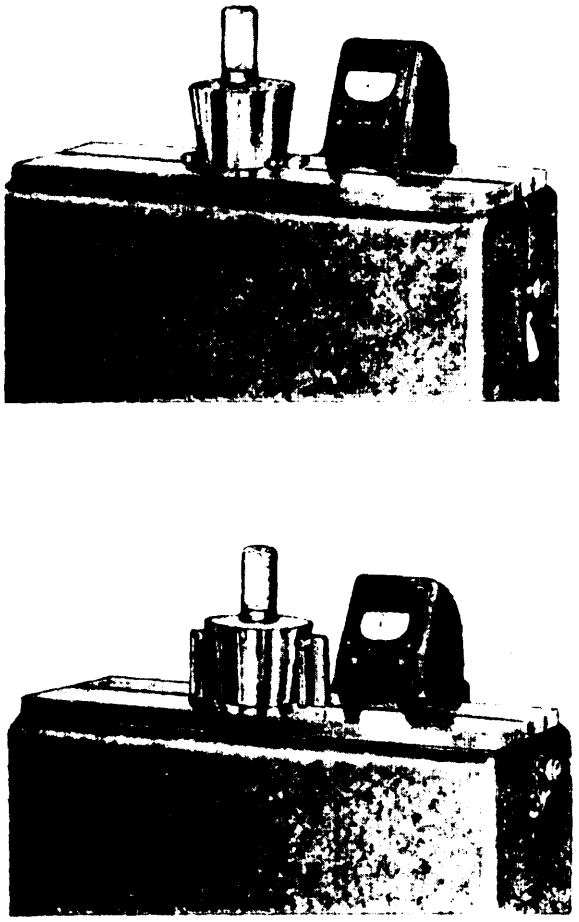

Figure 166. Measuring taper and diameter of tapered plug.

interchanging the rolls for a second measurement. Any difference in the two measurements indicates an error in squareness of the face.

8.7.1.9 If the end of the gage is found to be perpendicular to the axis it can be placed directly on the base of a hold-down fixture or measuring machine and the measurements taken as shown on figure 166.

8.7.2 Checking gages when front face is not square. When the error in squareness is large enough to affect materially the accuracy of the diameter measurements, it is sometimes possible to mount the gage upright between centers for the measurements. The centers can be part of a small fixture which is adjusted until the gage is vertical within the requirements of the measurements. The accuracy of the vertical placement can be checked by indicating over the back face of the gage or the horizontal surface from which the datum diameter or apex has been dimensioned.

8.7.2.1 If the gage cannot be mounted on centers, it is sometimes possible to hold it in a taper shank holder.

8.7.2.2 In selecting rolls it should be remembered that the larger the roll, the less will be the errors due to surface irregularities and deformation at the contact between the roll and the gage. Nominal diameters of 0.100, 0.200, 0.300, and 0.400 inch are commonly used However, some gages with very short lengths of taper will require the use of rolls smaller than 0.100 inch in order to obtain readings over a reasonably large portion of the tapered surface. On the other hand, rolls up to 1 inch in diameter are sometimes used on very long tapered plugs.

8.7.2.3 The use of extremely small rolls can usually be avoided by placing the front face of the gage on parallels and using comparatively large rolls which contact the lower portion of the taper when resting on the base of the hold-down fixture. Straight and tapered plugs are often rounded near the ends. Consequently, readings should never be taken closer than approximately 0.050 inch from the ends and preferably not closer than 0.200 inch from either end.

8.7.2.4 After the gage has been properly set up and the rolls placed in position for measuring the diameter near the base, measurements are made at various points around the circumference of the gage until the largest diameter is found. This value is recorded as the measurement at the base of the gage. The measurements at other points along the length of the gage are taken with the gage in the same angular position. This is done because only the high points on a gage which is out-of-round make contact with the component and determine the position of the gage. The rolls should be pushed lightly with the fingers before each measurement to assure firm contact with the gage, blocks, and micrometer anvils.

8.7.2.5 As an example let us consider the measurement of taper on the gage shown in figure 167. Rolls 0.4000 inch in diameter are convenient in this case. A practical value for A, the vertical distance between points of measurement, is 0.9000 inch. The exact value of A is not important as long as the rolls are a reasonable distance (generally between 0.050 and 0.200 inch) from the end of the plug at the top position. For the first measurement, the two rolls are placed directly on the hold-down fixture and the plug rotated to find the maximum diameter as previously described. The measurement in the second position is made with the gage in the same position and each roll placed on a 0.9000 inch gage block combination. The height of the blocks for the third position

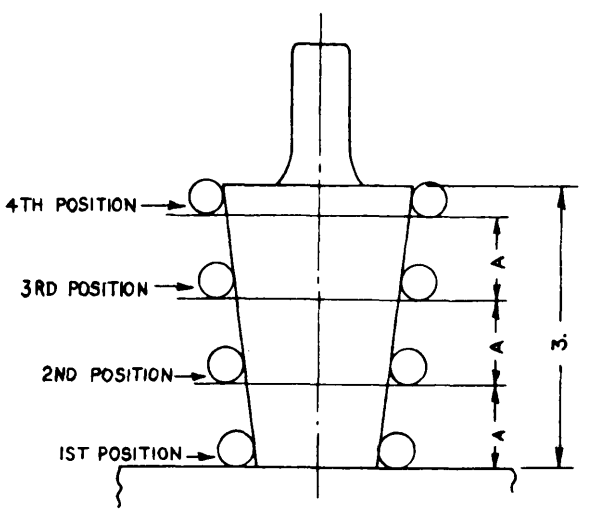

Figure 167. Set-up for measuring taper.

is 1.8000 inches and for the fourth position 2.7000 inches. Assume that the measurements over the rolls are as follows:

1.90000 inch 1st position
2.07999 inch 2nd position
2.26002 inch 3rd position
2.44003 inch 4th position

By subtracting each reading from the following one, we get the following differences:

0.17999 inch 2nd—lst
0.18003 inch 3rd—2nd
0.18001 inch 4th—3rd

Since the greatest difference between these figures is 0.00004 inch, the uniformity of taper is satisfactory.

8.7.2.6 In the preceding example, the actual taper is found by subtracting 1.90000 inch from 2.44003 inch and dividing by 2.70000 inch. This gives 0.2000 inch included taper per inch. The tangent of the half angle is $\frac{0.2000}{2}=0.1000$. By reference to trigonometric tables we find that the angle whose tangent is 0.1000 is 5 degrees, 42 minutes, 40 seconds. The included angle is twice this, or 11 degrees, 25 minutes, 20 seconds. The included angle cannot be computed by assuming that its tangent is 0.2000.

8.7.2.7 Any surface irregularities on the plug which were not detected by the previous measurements can be located by a moisture film check made over the entire length of the taper. This is done by drawing the hand across a flat lapped surface creating a very thin film of moisture. The contact surface of the gage is then placed on the surface and slid along perpendicular to the grain of the moisture film. The track left by the plug will indicate the uniformity of taper. The plug should leave some mark at both ends of its length and wipe away three-fourths of the film along its length. Great care should be taken to prevent any seesawing of the plug in this operation. Uneven pressure on the plug should also be avoided as this leads to a false indication whereby a plug with convex elements appears to have straight elements. This test is very accurate because the moisture film is only a few millionths of an inch thick. The same test can be performed more easily but less accurately with a thin film of blueing.

8.7.3 Checking diameters of taper plugs with rolls. For taper plugs having included angles of less than 90 degrees the most accurate method of measuring diameters is by means of measurements over rolls with the same setup used to check taper.

8.7.3.1 Before the diameter can be computed, the taper must be determined. The time required to determine diameters on a tapered plug is shortened by using the readings taken in measuring the taper, as described in the preceding paragraphs.

8.7.3.2 The most satisfactory method of setting of the machine for this measurement is to measure over blocks and rolls, using the nominal diameter of the rolls instead of their exact size as specified in 8.5.6.1. Since this method eliminates the effect of small departures from nominal roll size, it is only essential that the rolls be as nearly the same size as possible.

8.7.3.3 The necessary computations for determining diameters by this method are as follows:

Given:
Specifications for gage (see fig. 168).

Found by measurement:
Included taper per inch (T. P. I.) = 0.37503 inch
Measurement over rolls (M) = 2.17405 inch
Height of blocks (selected) (B) = 0.8000 inch
Length from front to back of plug (G) = 5.30434 inch
Radius of rolls (r) = 0.20002 inch

Find diameter at height of blocks (see fig. 169).

$$A=r+r\cot\frac{90°-a}{2}$$

$$A=0.20002+0.20002\times1.20495=0.44103$$
$$2A=0.88206$$
$$D=M-2A=2.17405-0.88206$$
$$D=1.29199 \text{ inch}$$

Find the length from the back face of the gage

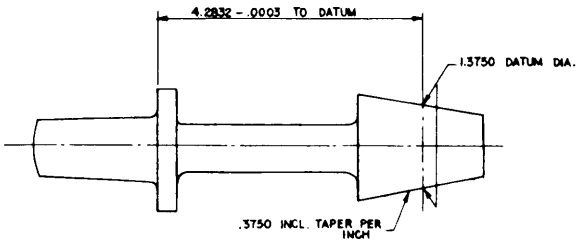

Figure 168. Tapered plug drawing specifications.

to the point along the taper where the diameter equals exactly 1.3750 (see fig. 170).

$$B=\frac{C-D}{T.\ P.\ I.}=\frac{1.3750-1.29199}{0.37503}$$

$$B=0.22134$$

$$F=B+E=0.22134+0.80000$$

$$F=1.02134$$

$$X=G-F=5.30434-1.02134$$

$$X=4.2830$$

The location of the datum diameter, therefore, is 4.2830 inches from the back face of the plug, which is within the limits specified on the gage drawing.

8.73.4 Datum diameter system. The datum diameter is not a dimension to be measured directly but is a basic figure used in computing axial lengths. Variations in the diameter of the plug are limited by applying the tolerance to the axial distance from some given point to the datum diameter. The object of this system is to eliminate the errors and misinterpretations which arise in other systems wherein the actual position of the tapered surface is affected by the tolerances on more than one dimension (variations in the diameter of the plug as well as variations in the length to the sharp corner) which introduce the effects of cumulative tolerances. An advantage to the gage maker of the datum system is that it permits him to control the effective diameter of the plug by grinding or lapping metal off the reference surface. Such a surface has large tolerances compared with equivalent tolerances on the diameter. On plugs having slight tapers, considerable change in the length to the tapered section has no more effect on the size of the gage than very slight changes in diameter.

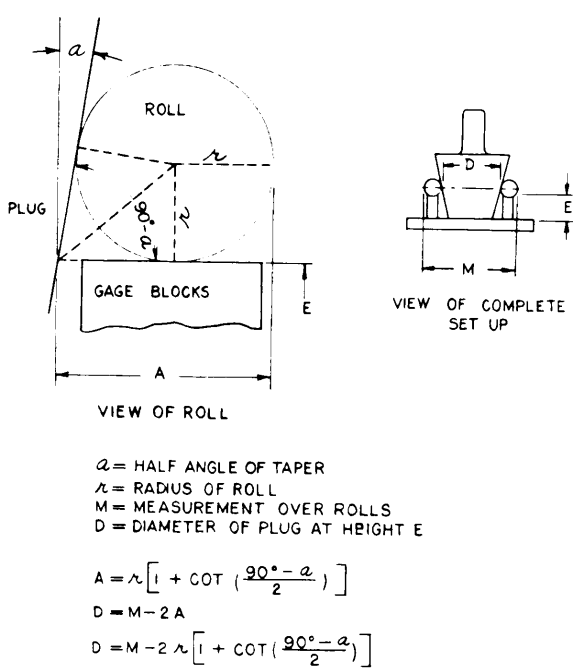

Figure 169. Computing tapered plug diameter from measurements over rolls.

8.7.4 Measuring the diameters of tapered plugs with roll and sine bar. This method is best adapted to the measurement of a large number of gages of the same size because it is a convenient and rapid method once the initial set-up has been made. However, it is not preferred when only a few gages of the same size are to be measured because of the expense of making the special roll or when extreme accuracy is required because of "the difficulty in placing the gage in exactly the right position with respect to the sine bar. The geometry of the method is such that cumulative tolerances will be introduced in all cases except those in which the front face of the gage is used as the reference plane when the gage is applied to the component.

8.7.4.1 This measurement is accomplished by placing the tapered plug on a sine bar in a set-up similar to that used for checking the taper with a sine bar and indicator.

8.7.4.2 A roll is placed on the bar in front of the plug as shown in figure 171. The diameter of the roll is such that its height above the surface plate is equal to that of a gage with exactly nominal dimensions. Errors in the diameter of the gage are determined by the differ-

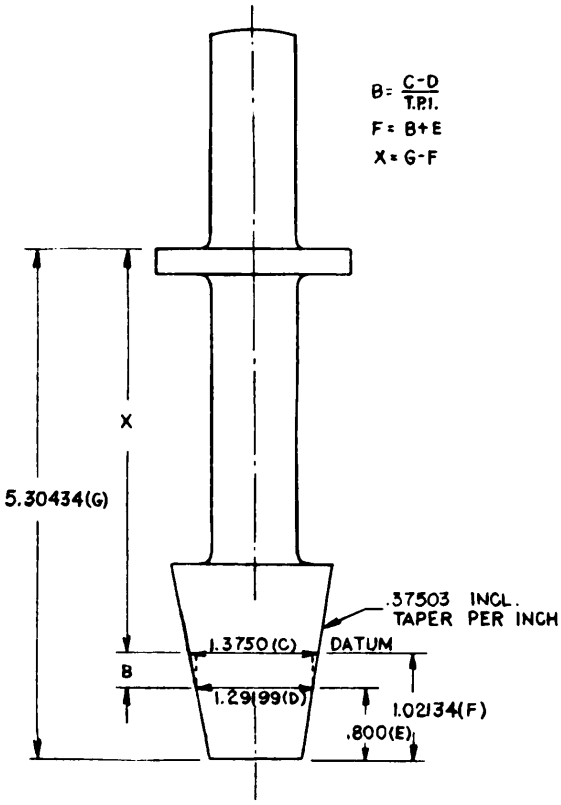

Figure 170. Finding location of datum diameter.

ence in the height of the top of the roll and the top of the plug.

8.7.4.3 The gage is held in position by means of a clamp (see fig. 172). Before positioning the gage it should be. mounted on centers to determine the parallelism of the axis of the gage and ground cylindrical surface which is to bear against the angle plate. In setting the gage in a position for measurement the axis of the gage must be parallel to the sides of the sine bar and the lower side of the tapered surface must be absolutely snug against the surface of the sine bar along the full length of the gaging surface. This latter condition can be checked by sighting between the gage and the sine bar.

8.7.4.4 The formula for computing the radius of the measuring roll is as shown in figure 173. If a roll of the right size is not available, a smaller roll can be placed on gage blocks. The formula for finding the length of blocks necessary to bring the top of the roll level with the top of the gage is shown on figure 174.

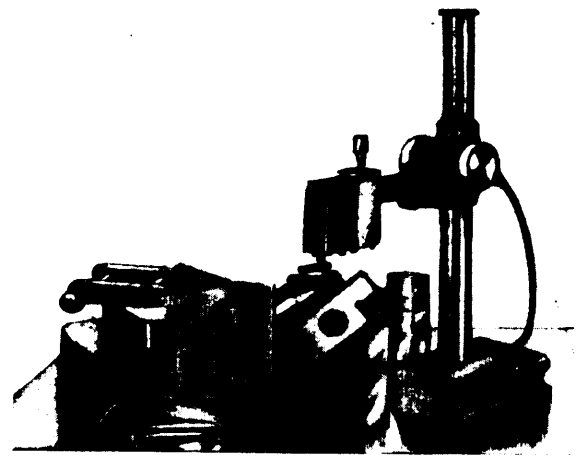

Figure 171. Checking diameter with roll and sine bar.

8.7.5 Checking the diameter of tapered plugs with master rings. When a large number of tapered plugs of the same size are to be inspected, much time will be saved by making taper ring check gages to inspect the plug gage. An additional advantage of check rings is that

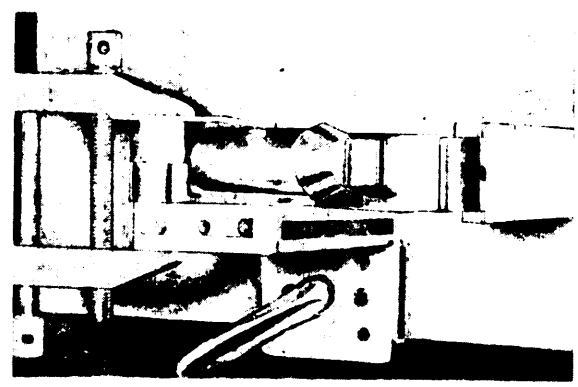

Figure 172. Method of damping gage over sine bar.

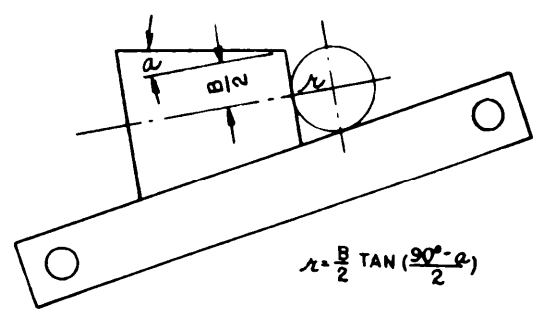

Figure 173. Roll for checking taper plug.

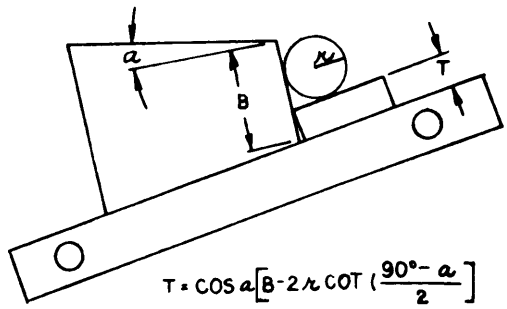

Figure 174. Length of block for odd size roll.

they check the entire circumference of the plug gage for maximum diameter.

8.7.5.1 Check rings should be 3/16 inch thick. They are made in pairs, one ring being as close as possible to the basic diameter for the front of the plug and the other being as close as possible to the basic diameter for the back of the plug. The dimensioning of check rings is shown on figure 175.

8.7.5.2 The rings are fitted to master plugs. Great care must be taken to make them very accurate, as otherwise they will be of no value.

8.7.5.3 The check rings are used by clamping the plug in a vertical position and placing the rings over it. Each ring should be horizontal. Check by indicating. The rings should be adjusted in position with only moderate hand pressure. approximately the same as that used to fit the rings on the master plug. If the outer surfaces of the rings are exactly flush with the front and back faces of the gage, the dimensions of the plug are as specified on the drawing. If the rings are not flush, the diameters of the plug can be determined by measuring, h,

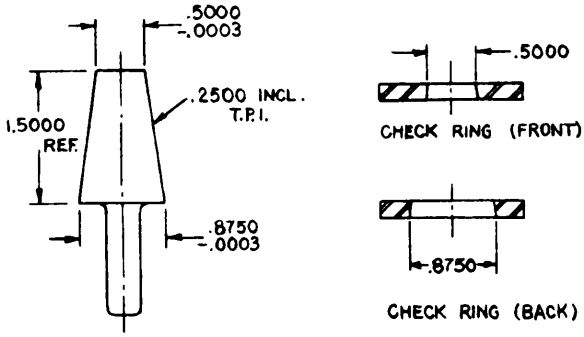

Figure 175. Checking taper plug with check rings.

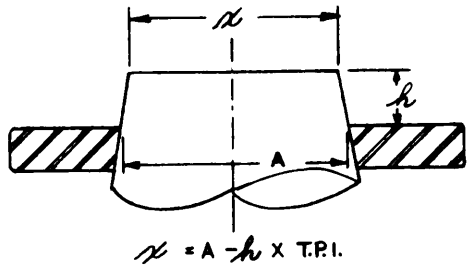

Figure 176. Computing diameter of tapered plug.

the distance between the face of the plug and the outside face of the ring with a height gage (see fig. 176). The diameter of the front end is determined by multiplying the distance h by the included taper per inch. This value is subtracted from the diameter of the ring if the face of the plug is above the face of the ring and added to the diameter of the ring if the face of the plug is below the face of the ring. The reverse is true at the back of the plug. For example, let us assume that the front face of the gage shown in figure 175 projects 0.0008 inch from the outer face of the check ring. The diameter at the front of the plug is found as follows:

Given:

A= 0.5000
T. P. I.= 0.2500
h= 0.0008
x= A–h x T. P. I.
x = 0.5000 – 0.0008 x 0.2500=0.4998

Therefore, the diameter at the front of the plug is within the specified tolerance.

8.8 ALINEMENT AND CONCENTRICITY PLUGS

8.8.1 The diameters and tapers of the individual sections of these plugs are checked according to the methods specified in 8.6 and 8.7.

8.8.2 The location of the intersection of two tapered surfaces and the diameter at this point is sometimes required on these gages. This is done as follows:

8.8.2.1 Stand the plug upright in a hold-down fixture and find the taper of each section by measuring over rolls in the same manner as on ordinary taper plug gages.

8.8.2.2 Using the readings taken for the taper check, compute the diameter d_1 at a distance H_1 from the front face of the plug (see

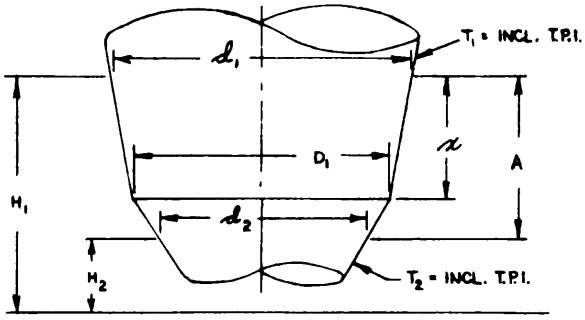

KNOWN:- H_1, H_2, d_1, d_2, T_1, T_2

$$A = H_1 - H_2$$
$$D_1 = d_1 - xT_1 \qquad D_1 = d_2 + (A - x)T_2$$
$$d_1 - xT_1 = d_2 + (A - x)T_2$$
$$xT_2 - xT_1 = d_2 - d_1 + AT_2$$
$$x = \frac{AT_2 + d_2 - d_1}{T_2 - T_1}$$

Figure 177. Computing location of intersection (small taper over large taper).

fig. 177). If this face has been placed on the hold-down fixture, H_1 will equal the height of the gage blocks used to make the measurement at this point. The diameter is computed by the method specified in 8.7. Determine the diameter at one point on the adjacent tapered section by the same method.

8.8.2.3 Using the method shown on figure 177, compute the distance x from the point of measurement to the intersection.

8.8.2.4 Use the same methods to locate other intersect ions. If the upper taper is steeper than the lower, the method shown on figure 178 can be followed.

8.8.2.5 Use the method shown on figure 179 to find the distance from the intersections to the reference surfaces.

8.8.2.6 The diameters at the intersections can be computed from the second line of equations shown on figures 177 and 178.

8.8.3 The special fixture shown on figure 180 will reduce the time for the inspection of alinement plugs to a small fraction of that normally required. It also can be used to advantage on ordinary tapered plugs.

8.8.3.1 Slow tapers are checked by means of two adjustable plates at right. angles to one another which support the plug in much the same manner as a "V" block. These plates are adjusted to the half angle of the taper by placing the fixture on a sine plate which has been set for this angle and adjusting their position

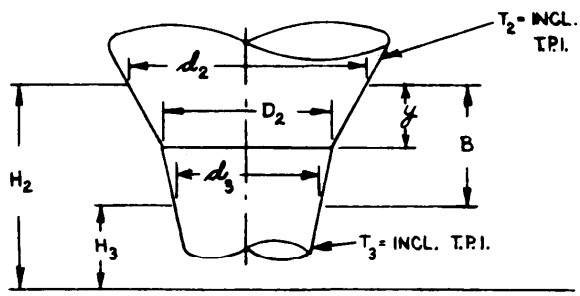

KNOWN: H_2, H_3, d_2, d_3, T_2, T_3

$$B = H_2 - H_3$$
$$D_2 = d_2 - yT_2 \qquad D_2 = d_3 + (B - y)T_3$$
$$d_2 - yT_2 = d_3 + (B - y)T_3$$
$$yT_3 - yT_2 = d_3 - d_2 + BT_3$$
$$yT_2 - yT_3 = d_2 - d_3 - BT_3$$
$$y = \frac{d_2 - d_3 - BT_3}{T_2 - T_3}$$

Figure 178. Computing location of intersection (large taper over small taper).

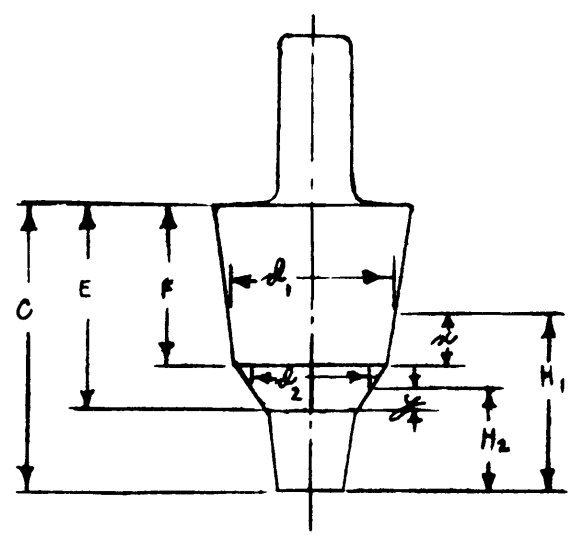

$H_1 - x + F = C$ $\qquad$ $H_2 - y + E = C$
$F = C - H_1 + x$ $\qquad$ $E = C - H_2 + y$

Figure 179. Computing distances from back face to intersections of tapers.

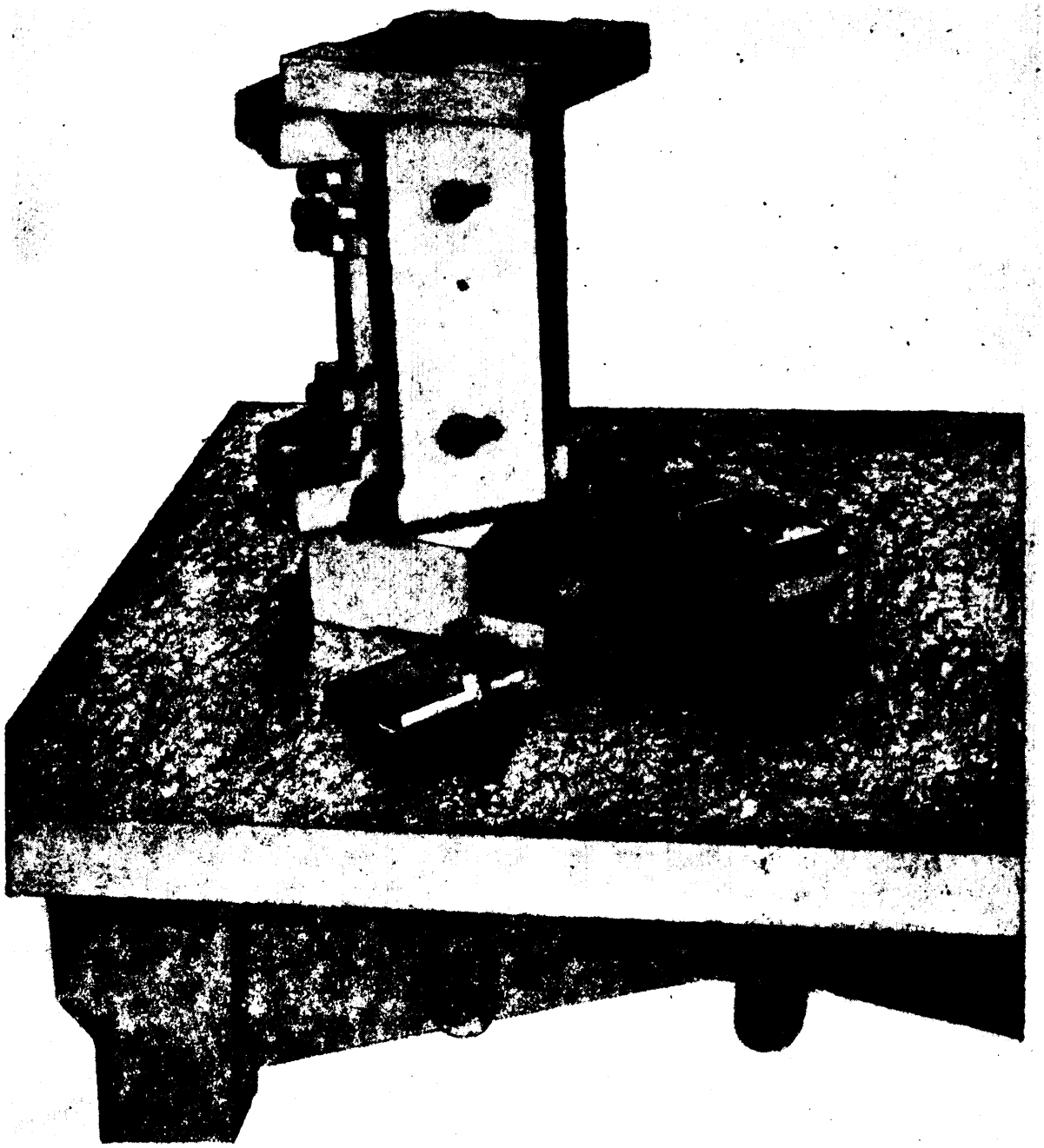

Figure 180. Special fixture for checking taper and diameter of tapered plugs.

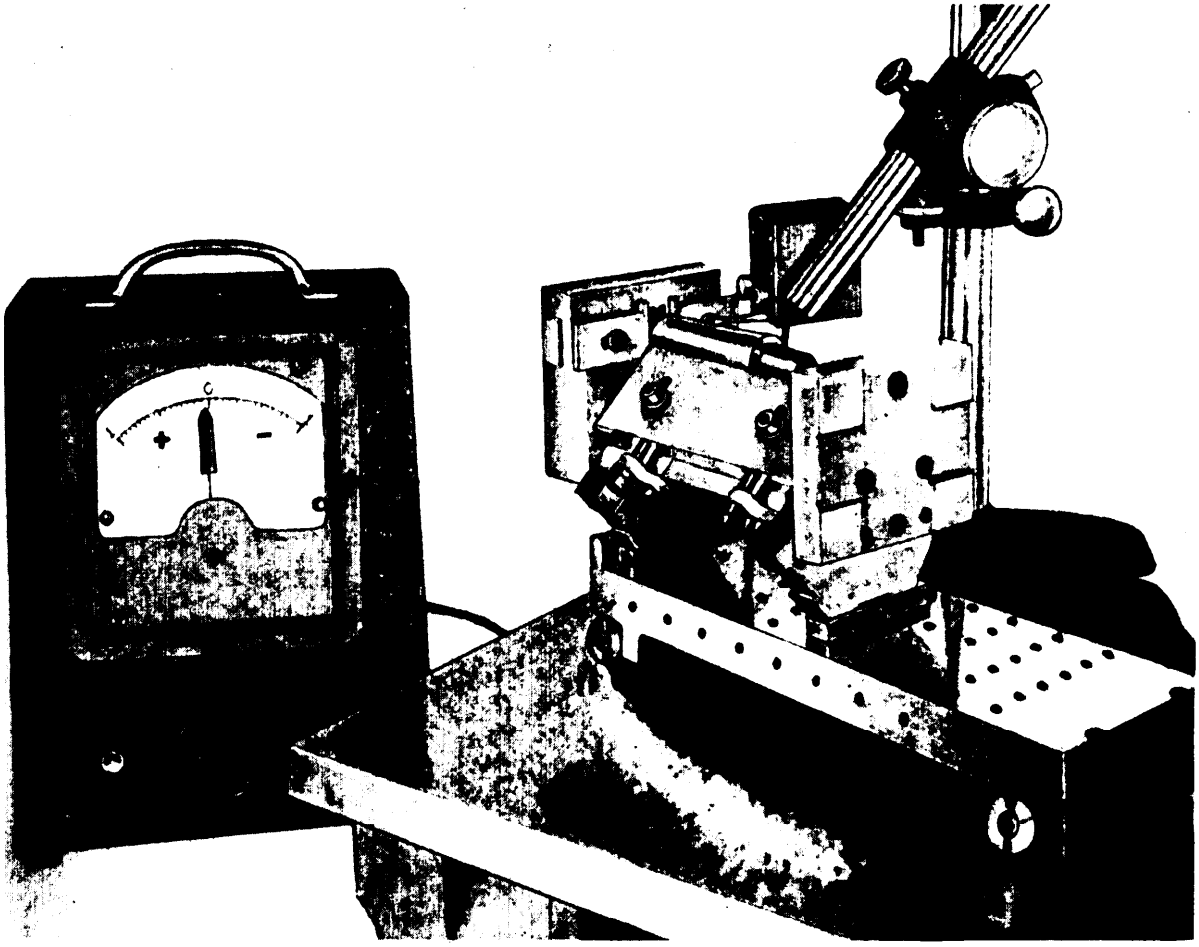

Figure 181. Checking taper with special fixture.

until the surfaces which support the plug are level as indicated by a precision height gage. Sets of feet at right angles are provided so that each plate can be placed in a vertical position over the sine block for effecting this adjust-

8.8.3.2 The actual measurement of the taper is made by standing the fixture on the sine plate so that it rests on a third set of feet as shown on figure 181. Any variations in the height as determined with a precision height gage must be multiplied by .83 to find the true error in the taper. For example, if the difference in the readings at the two ends of the tapered section is 0.001 inch, then the actual error in taper over the length of the section is 0.00083 inch. This correction applies to all tapers which do not exceed 0.1 inch per inch, and where the error in taper is not greater than 0.010 inch per inch.

8.8.3.3 The diameter of slightly tapered sections can be measured with this set-up when a master gage or a gage which has been accurately calibrated is used for setting the height gage. The master gage is positioned axially by thrusting the steep taper against the measuring rolls as shown on figure 181 or by thrusting some other precision surface against the fixture and then comparing the height of the plug with the master. As before, differences in height gage measurements must be multiplied by .83 to determine the error in taper.

8.8.3.4 In order to check the distance to the datum diameter of steep tapers, the fixture is

set up on one end so that the plug is vertical as shown on figure 182. The members of the fixture which hold the rolls in position are adjustable so that the rolls can be spaced any required distance apart. These members are mounted on a common base which is free to move at right angles to the axis of the rolls to permit proper alinement of the rolls with the axis of the plug. Two methods can be used to measure the length to the datum diameter. The easiest method is to place a master plug or a calibrated plug in the fixture and establish the height of the back face by means of a precision height gage. The plugs to be measured are then inserted in the fixture and the heights of the back faces checked by means of the precision height gage. The difference in these heights indicates the amount by which the distances to the datum diameters of the plugs differ from the distance to the datum diameter on the master plug. For this set-up the rolls are spaced any convenient distance apart which will permit contact with the master near the center of the steeply tapered section. The other way to measure the length to the datum diameter is to adjust the fixture so the rolls are some specific distance from each other. (Use gage blocks to establish this distance.) The basic distance from the datum diameter of the gage to the back face then is computed by means of the formulae shown on figures 169 and 170.

8.8.3.5 The angles of steeply tapered sections can be measured by altering the distances between the rolls by convenient, but accurately

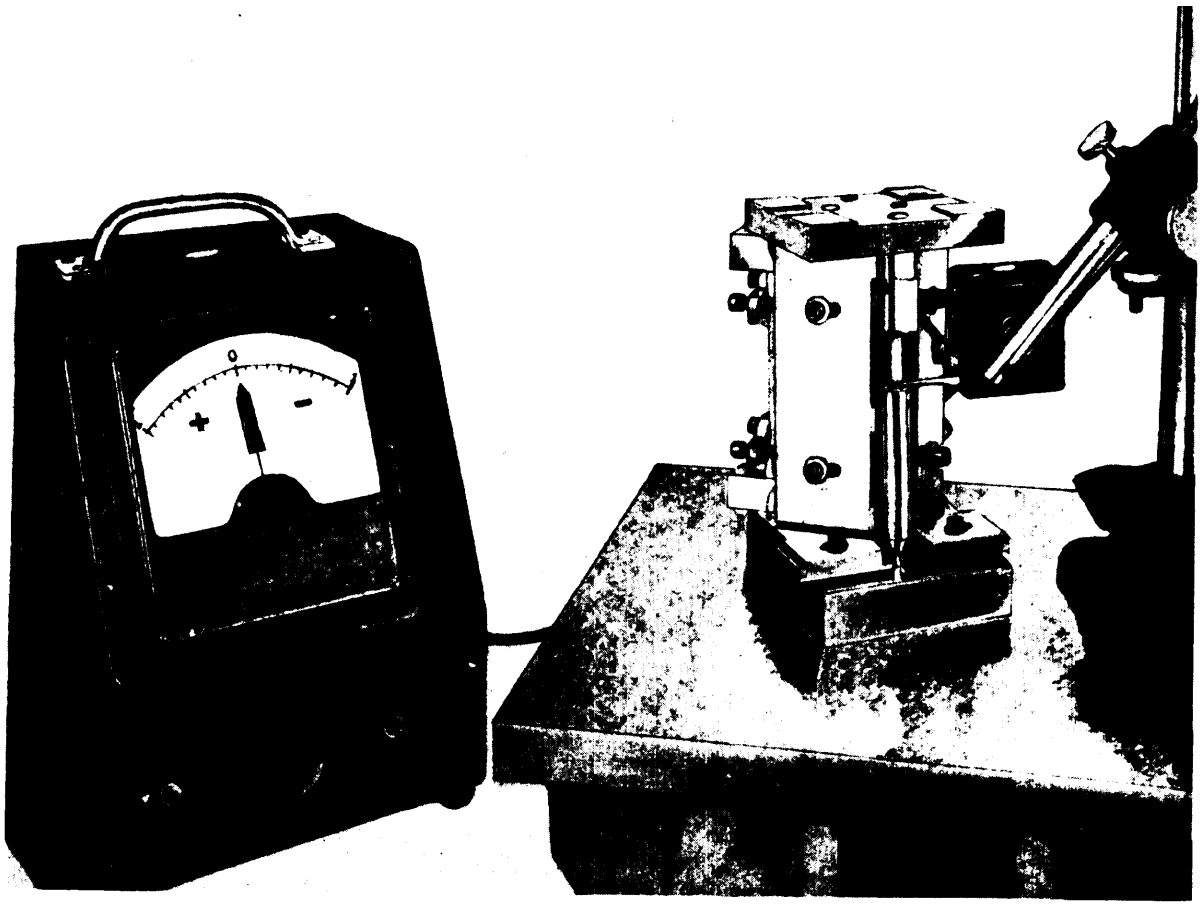

Figure 182. Checking length to datum diameter with special fixture.

determined, distances, and remeasuring the height of the back face. The differences in the distance between the rolls, divided by twice the change in the height of the gage gives the tangent of the half angle of the taper.

8.8.4 Alinement and concentricity plugs must also be checked for concentricity. This can be done by mounting the plug between centers and indicating over each of the precision diameters while the plug is rotated.

8.8.4.1 If there are no centers on the gage or if the surfaces are not concentric with the centers, the check for concentricity can be made by placing one section of the plug in a "V" block. An indicator then is brought into contact with the other sections as the plug is rotated.

8.8.4.2 When a drawing specifies eccentricity (or concentricity) within a given amount, the total permissible indicator variation is twice this amount. For example, if a drawing reads "max. permissible eccentricity: 0.0002 inch," the maximum permissible variation in indicator readings is 0.0004 inch. When there are no specifications for concentricity it is generally assumed that no part of a gaging surface exceeds the diametral limits specified in the drawing. When the gage drawing merely states that certain surfaces must be "concentric" it is assumed that a total indicator variation of 0.0001 inch or less is satisfactory.

8.9 RING AND RECEIVER GAGES

8.9.1 Plain ring gages. The following means are used to check the diameters of ring gages:

8.9.1.1 Check plugs. It is common practice to furnish check plugs with gages less than ¼ inch in diameter. These check plugs should fit the ring with no shake whatsoever. The check plug should be tried at both ends of the ring to be certain there is no bellmouthed condition. Check plugs must be absolutely clean and dry. If a check plug 0.0001 inch larger than the first is available, it should be tried in the ring. If such a plug is not an extremely tight fit, the gage is unsatisfactory.

8.9.12 Internal calipers. Internal diameters with tolerances of 0.0005 inch or greater can be measured by means of internal calipers or internal micrometers by the transfer method. This applies to diameters of about 1 inch; the method becomes less accurate for larger diameters. The micrometer is settled in position by moving it horizontally or vertically with respect to the ring until the proper fit is found. This assures alinement of the contacts on a diameter. The micrometer or the caliper then is locked in position, removed and measured with external measuring equipment, using the same feel employed to establish the internal diameter. It is important that the radii of the caliper or micrometer jaws be less than the radius of the gage.

8.9.1.3 Dial bore gages. These gages may be used to check internal diameters with tolerances of 0.0002 inch or greater. They are made in sizes suitable for diameters ranging from ⅛ to 12½ inches. Dial bore gages are particularly useful when several ring gages of the same size are to be checked.

8.9.1.4 Casts. Although the measurement of close tolerance internal diameters by means of casts made with low melting point metals has not yet attained widespread recognition, the method has considerable value in some instances. The attainable accuracy is at least as good as that of the bench micrometer. This method is used only on ring gages less than ½ inch in diameter, or less than ¼ inch in diameter in case an internal comparator is available. Base metals with a low melting point which expand upon solidifying appear to be well suited for this work. One such metal is sold under the trade name "Cerrobend". The ring gage to be inspected is cleaned carefully and placed on a flat plate. Molten metal then is poured into the ring until it is full and the work allowed to stand overnight. The casts are driven from the rings with punches which are only sightly smaller in diameter than the rings. The casts should be handled only with tweezers, and should be measured between flat anvils within ½ hour after being removed. The burr on the cast should be filed off before this measurement. A second cast, driven out from the large end of the gage, should be made if there is any indication that the ring is bellmouthed or tapered.

8.9.1.5 Internal measuring machine. This instrument is suited for all diameters greater

than ¼ inch and can be read directly to 0.00002 inch. It is used to measure the internal diameters of gages or gage parts with diametral tolerances of less than 0.0005 inch.

8.9.1.6 Gage blocks. If an internal measuring instrument or dial bore gages are not available, internal diameters with tolerances less than 0.0005 inch can be measured by the use of gage blocks with internal measuring accessories or with rolls. Gage block combinations are tried with the rolls or with the accessories until a combination is found which will just barely slide into position with a moderate pressure.

8.9.1.7 Common defects in ring gages are bellmouth, large center, taper, and out-of-round conditions. They can all be detected by proper exploration of the bore of the ring gage.

8.9.1.8 All burrs should be removed from the openings before a ring is measured.

8.9.1.9 Another point to watch for is wear on the anvils of the measuring instruments. Anvils with flats should be reconditioned. The depth of the wear can be determined by the use of a contour projector in the case of calipers and micrometers, and by means of direct measurement over the anvils in the case of precision accessories.

8.9.2 Receiver gages. When a check plug is provided for the receiver, check plug is inserted in the receiver and checked for shake. No shake whatsoever is permissible. When rereceivers are made of several sections, each section should be disassembled and tried individually with the plug to be sure that the corresponding section of the receiver is not too large. If check gages are not provided for receiver gages, they must be checked by the methods used for plain and tapered ring gages. Tapered internal surfaces may be checked by the following means:

8.9.2.1 Check plug and blueing (angle check). Check plugs are usually provided for tapered sections of receiver gages. To inspect the angle with a check gage, the surface of the check is coated with a thin, uniform film of Prussian blue, cardinal red, or other oil pigment. This film is rubbed on the gaging surface with the fingers. Extreme care should be taken to apply the film uniformly. The film should be thin enough to appear much lighter in color than when first pressed out of the tube. The thinner the film, the more exacting the test will be. The check is then placed in a receiver, given one-eighth of a turn, and turned back to the starting position. The removal of blueing should show a bearing at each end and on 75 percent of the tapered surface.

8.9.2.2 Pencil lines and check plug (angle check). A series of longitudinal pencil lines are drawn on the surface of the plug. The check is inserted into the receiver and turned a distance less than the distance between the pencil lines, and returned to starting position. The check then is removed and inspected as before. Lines of this sort can also be made with blueing. These are easier to see, but they are a less critical check.

8.9.2.3 Sine bar and angle plate (angle check). Another way to check an internal cylindrical taper is to bolt the gage to an angle plate and mount the assembly on a sine bar or sine plate as shown on figure 183. This method is useful because it does not require extensive computations and makes possible the measurement of the error over the entire tapered surface. One precaution to be taken in using this method is to be sure that the face' of a gage is perpendicular to its axis.

8.9.2.4 Precision balls (angle and diameter check). The ball method should be used

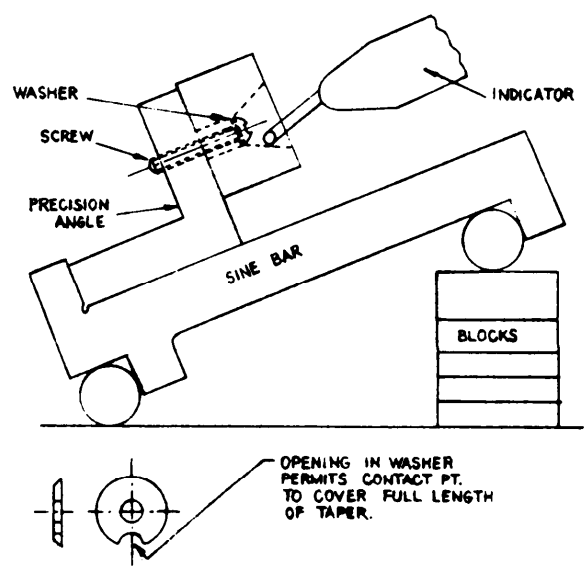

Figure 183. Checking tapered ring on sine bar.

only when the included angle of taper at the point where the ball rests in the gage is fairly large, say 20 degrees or greater. It can be used to find both the angle and the diameter of the tapered section. The method is particularly useful for determining the depth of irregular depressions such as worn spots, and for measuring small curves or radii. The method has the followings disadvantages: the accuracy is effected by minor irregularities on the surface of the gage, accurate balls are required and it is sometimes difficult to obtain proper seating without exerting excessive pressure. The following precautions are to be observed in using this method:

a. Always check the surface being inspected for straightness and uniformity. For example, when an internal conical surface is being inspected, use a check plug and blueing or make a cast in order to be sure that there are no irregular depressions or humps on the surface.

b. Be sure that the internal surface has a good uniform finish (only lapped or finish ground surfaces can be inspected).

c. The ball must be measured for size and roundness within the accuracy desired for the measurement. Seat the ball carefully and rotate it a bit to obtain a good contact. Use a light pressure in measuring over the ball. Use the measured value of angle in computing the diameter. The only measurements required to determine the taper and diameter of an internal cylindrical surface by means of balls is to ascertain the relative heights of two different size balls with relation to a reference plane on the ring. This is usually done by sliding the set-up under a precision comparator or

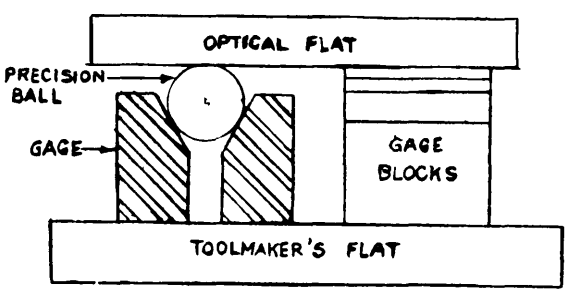

Figure 184. Set up for measuring the angle and the diameter of an internal conical surface,

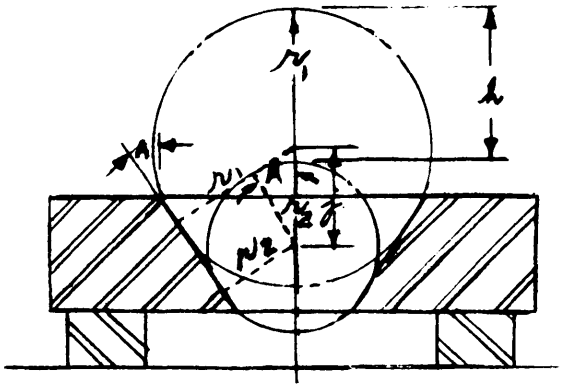

$$j + r_1 = h + r_2$$
$$j = h + r_2 - r_1$$
$$\sin A = \frac{r_1 - r_2}{j}$$
$$\sin A = \frac{r_1 - r_2}{h + r_2 - r_1}$$

Figure 185. Computing internal angle from measurements over two balls.

by use of optical flat as shown on figure 184. The taper is measured by comparing the heights of two precision balls, one of which rests near the top of the tapered surface and the other near the bottom. The uniformity of taper is determined by using other sizes of balls and recomputing the angle. Figure 185 explains the mathematical steps for computing the angle. In this figure, h represents the difference of the heights of the tops of the balls, r_1 is the radius of the larger ball, r_2 is the radius of the smaller ball and A is the half angle of the tapered surface. As an illustration of the angle computation, assume that two balls 1.30008 and 2.19993 inches in diameter, respectively, are placed successively in a receiver gage. Assume that the difference in the heights of the tops of the balls is 1.12347 inches. The angle is determined as follows :

$$h = 1.12347$$
$$r_1 = 1.09997$$
$$r_2 = 0.65004$$
$$A = \frac{1.09997 - 0.65004}{1.12347 + 0.65004 - 1.09997} = 0.66801$$

By reference to trigonometric tables it will be noted that the angle which corresponds to a sine of 0.66801 is 41 degrees 54 minutes 49 seconds. Therefore, this is the value of the half angle of the taper. (In most cases the value entered on the gage record card for this angle should be 41 degrees 55 minutes in order not to misrepresent the accuracy of the measurement. In most instances of this type the angular measurement will be accurate only to the nearest 20 seconds). The computations necessary to determine the diameter at the upper end of a tapered surface are shown on figure 186. In this figure, h is the distance from the top of the ball to the top of the tapered surface; r is the radius of the ball; A is the half angle of the taper, and x is the diameter of the tapered section at the top. Suppose that it is desired to measure the diameter of the receiver gage for which the half angle of taper was computed in the previous example. It is always necessary to compute the angle of taper before computing diameters in order to use the measured value of the taper in the computation for the diameter. Assume that the diameter of the ball is 2.19993 inches and that the distance from the top of the ball to the upper surface of the gage is 1.48654 inches. In this case the diameter is computed as follows:

Given: A= 41°54´49´´
1= 1.48654
r= 1.09997
x=2 (1.09997 x 0.66801 + 1.09997 – 1.48654) X 0.89768+2 x 1.09997 x 0.74415=2.33353= diameter

8.9.2.5 Tapered check plugs (diameter check). The diameters of tapered surfaces of receiver gages can also be measured by means of tapered check plugs. These plugs are designed so that they are flush with the top of the receiver gages if the diameter of the tapered section of the receiver is normal. A test indicator is passed over the top of the plug and the top of the receiver to measure any difference in height. If the plug is higher than the receiver the diameter of the receiver will be less than normal by an amount equal to the difference in height multiplied by the included taper per inch. If the plug stands below the receiver the diameter of the tapered section of the receiver will be greater than normal by this amount. A similar method is shown on figure 176 the only difference being that the diameter of the plug is given and the diameter of the ring computed.

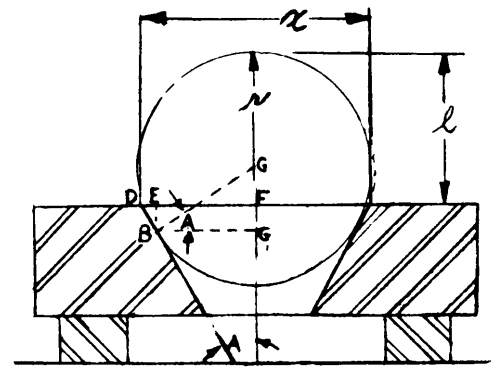

GIVEN $l, r, \angle, A.$

$CG = r \sin A$
$BE = CG + r - l = r \sin A + r - l$
$DE = BE \tan A = (r \sin A + r - l) \tan A$
$EF = BC = r \cos A$
$DF = DE + EF = (r \sin A + r - l) \tan A + r \cos$
$x = 2\,DF$
$x = 2(r \sin A + r - l) \tan A + 2 r \cos A$

Figure 186. Computing diameter at large end of taper from measurement over ball.

8.9.2.6 Calibrated tapered plugs (diameter check). Lengths to datum diameters on internal tapered surfaces can be computed even when a check plug designed for the receiver is not available. All that is required is a plug with a taper the same as that. of the receiver. Assume that the lengths to the datum on the plug is found by measurement to be A. Assemble the plug with the receiver and measure the height from the reference surface on the plug to the reference surface on the receiver (these are the surfaces from which the datum diameters were dimensioned on the drawing).

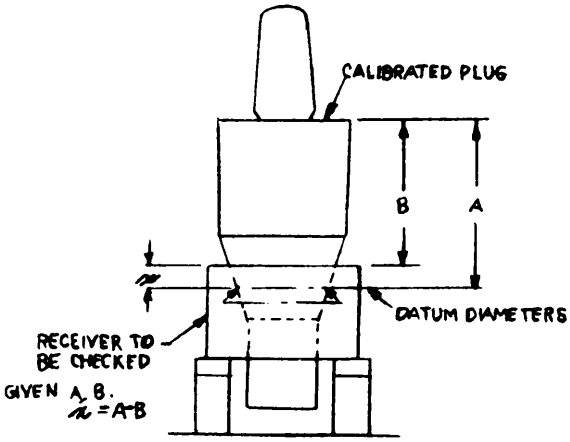

Figure 187. Measuring length to datum diameter by means of calibrated plug.

The difference between these two dimensions represents the actual distance to the datum of the receiver (see fig. 187).

8.10 INSPECTION OF SNAP GAGES

8.10.1 Plain and built-up snap gages. It is essential that all screws be tight and that all burrs have been removed from the anvils before a snap gage is inspected.

8.10.1.1 Snap gages are checked for size and parallelism of anvils by the use of a block and roll combination. The blocks are wrung to the large anvil and the roll is moved about under the small anvils. The roll should be tried in positions at right angles to the gage as well as in positions parallel to the gage. The size of the gage (distance between the anvils as specified on the gage drawing) is determined at the point where the rolls fit the tightest. The length of the gage block combination which permits the roll to slide between this point with only moderate finger pressure, plus the diameter of the roll used is the size of the gage. Errors in parallelism are determined by trying block combinations at other points. Rolls used in measuring such gages should be examined for flat spots at regular intervals.

8.10.1.2 On small sizes (less than 1 inch) the use of the roll is not necessary; inspection can be made by the use of gage blocks alone. Prior to inspection, surfaces of the gage anvils and the gage blocks should be thoroughly cleaned, otherwise the "feel" of the blocks will be affected and the setting will be inaccurate.

8.10.1.3 The test is made by resting the gage blocks on the large anvil and sliding it under the smaller anvils. If the dimension of the gage is the same as the length of the gage blocks a slight amount of extra resistance will be felt just at the edge of the block combination under the edge of the small anvil. If the blocks do not fit properly under the step, other sizes of blocks are tried until the proper fit is found. After the proper combination of blocks has been found, the results should be checked by trying blocks 0.0001 inch smaller than the blocks which appear to represent the proper fit. The smaller combination should be a free fit. This method of rechecking is particularly useful when the checker has had little experience in checking snap gages.

8.10.1.4 Parallelism can be checked by trying the gage blocks in different positions near the edges of the anvils and by trying larger or smaller blocks where the "feel" appears to be looser or tighter than normal. The anvils of small gages should preferably be parallel within 0.0001 inch. However, strict interpretation of the drawing indicates that the error in parallelism may be any amount as long as the distance between opposite anvils falls within the gage maker's tolerance limits at any point on the surfaces.

8.10.1.5 When snap gages are used in quantity, savings in time and greater accuracy will be obtained by procuring precision setting rolls for the common sizes of snap gages.

8.10.1.6 The flatness of the anvils can be inspected with an optical fiat or a knife-edge straightedge.

8.10.2 Adjustable snap gages. Before setting, these gages should be checked for range by moving the anvils to their extreme limits and measuring with a rule.

8.10.2.1 The size, parallelism, and flatness of adjustable snap gages are checked by the same methods used for plain and built-up snap gages.

8.10.2.2 On adjustable snap gages, the "Not Go" anvil should be set first with the "Go" lock screw tightened. Setting the "Not Go" member after the "Go" will disturb the adjustment of the "Go."

8.10.2.3 In setting the anvils to an exact size, place blocks or rolls of the desired size between

the anvils, make the lock screws barely snug enough to permit movement of the anvils, and tighten the anvils by turning the adjusting screws. When a good slide fit has been obtained, tighten the locking screw.

8.10.2.4 After this has been done, tap the anvils to remove any backlash, back off the adjusting screws slightly and then check the size with blocks or rolls again. At the same time the parallelism should be checked. The object in backing the adjusting screws is to relieve stress which otherwise would cause the anvils to "creep" over a period of time.

8.10.2.5 When the gage is not set to exact dimension, the anvils should be checked at both limits of the range for parallelism. The error in parallelism preferably should not exceed 0.0003 inch. However, it is sometimes necessary to accept gages with a greater error than this, and lap the anvils parallel when they are set to some particular dimension.

8.10.3 Large snap gages (all types). Large snap gages should always be clamped upright for inspection. The clamps should be fastened to the boss of the gage frame, or in its absence fastened in a position which will prevent any springing of the frame. The clamp should be no tighter than necessary to hold the gage in position.

8.10.3.1 The position of the gage is adjusted until the large anvil is level. Parallelism is then checked by indicating over the other two anvils.

8.10.3.2 The distances between the anvils is checked either by gage block combinations or by measuring the distance between the gaging surfaces with an indicator height gage and gage blocks. When blocks are used on large sizes, it is convenient to wring the blocks to the large anvil, and to slide only the top block of the stack in checking the smaller anvils.

8.10.3.3 Another way to check the size and parallelism of large snap gages is by clamping the large anvil on an angle iron as shown on figure 188. This method is much faster than the one specified in 8.10.3.2, but is not quite so accurate. Parallelism is judged by indicating over the two smaller anvils, and size is determined by measuring between the smaller anvils

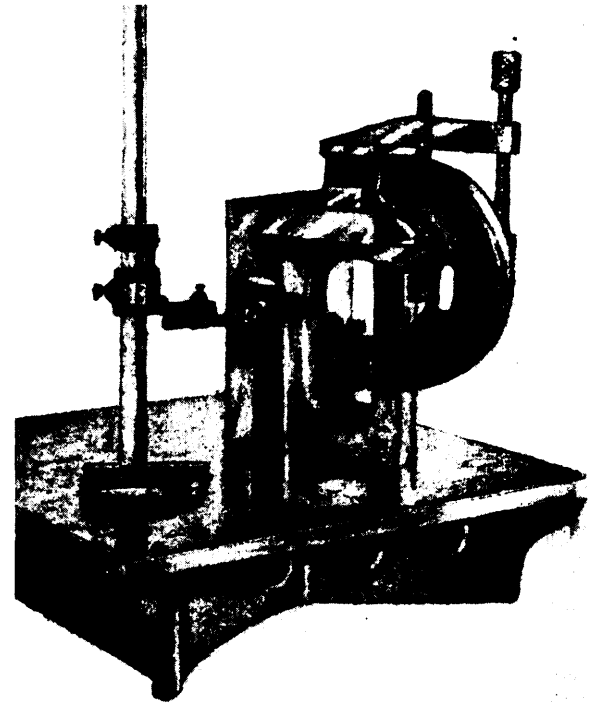

Figure 188. Checking parallelism of anvils on large snap gages.

and the top of the iron with an indicator height gage and gage blocks.

8.10.3.4 The flatness of large snap gage anvils can be judged by indicating, by sighting over the surface with a knife-edge straightedge, and in the case of very large anvils, by blueing a tool maker's flat and rubbing the anvil over the blueing.

8.11 THREAD PLUG GAGES. Before attempting to check thread gages, the inspector should study Handbook H28 "Screw Thread Standards for Federal Services" published by the National Bureau of Standards which is available from the Superintendent of Documents, Washington, D. C. A study of this book is necessary to acquire a knowledge of the definitions, standards and gaging principles related to American National and Unified Threads.

8.11.1 Lead. Accurate measurement of the lead of thread gages is more important than the measurement of all other elements, including pitch diameter. Each 0.0001 inch of lead error in a W-degree thread causes an inaccuracy in fit equivalent to a pitch diameter error of

0.00017 inch. If the lead is not strictly within the tolerance, values for the pitch diameter will not have much significance.

8.11.1.1 In the checking of setting plugs, it is important to measure lead accurately and to calibrate for the effect of errors in the pitch diameter and the flank angles. Consistent and accurate setting of thread rings cannot be obtained unless the cumulative effects of these errors in the setting plug are considered.

8.11.1.2 The lead error constitutes the error at the point where there is the greatest plus deviation, added to the error at the point where there is the greatest minus deviation.

8.11.1.3 Permissible lead errors of thread gages are sometimes as small as 0.0002 inch, it is desirable therefore to measure lead with a precision lead testing machine which has a measuring error of less than 0.00004 inch. Readings for lead error are usually taken about six or seven places in each inch of thread length.

8.11.1.4 For example, consider the lead measurement of a 10-pitch thread. Assume that the lead testing machine is set at zero on the first thread, and that every second thread is measured, giving the following readings:

Reading	Error
0	0
0.20010	+ 0.00010
0.40014	+ 0.00014 greatest +
0.59994	– 0.00006
0.79984	– 0.00016 greatest –
1.00006	+ 0.00006

The greatest plus error in these measurements is 0.00014, and the greatest minus error is 0.00016. Therefore, the maximum lead error is 0.00030. This value is within the limits of a gage whose permissible lead error is specified as 30.0003 between any two threads.

8.11.1.5 Although the lead, pitch diameter, and angle errors of thread gages are intended to be interdependent in theory (permitting less error in one element if there is greater error in another), it is generally not the practice to take this factor into account except in borderline cases. If the lead error of a plug is near the maximum tolerance limit, the plug should be accepted if the pitch diameter and angle errors are well within their tolerance, but not if the pitch diameter is near its maximum limit, or if the angle is near either limit.

8.11.1.6 If the lead measuring instrument determines the lead by registering variation in the distance between thread flanks in a line parallel to the axis of the threads, it is seldom possible to obtain true alinement between the axis of the thread and the line of motion followed by the measuring head in moving from one thread to another. For this reason, it is necessary to take two sets of readings 180 degrees apart on the circumference of the gage and to average the lead errors found in the two mearurements. Using the average of lead readings taken on two elements 180 degrees apart eliminates the effect of the misalinement of the axis of the gage with the axis of the measuring means. When the precision comparator on the lead testing machine registers variations in a line parallel to the axis of the gage, instead of variations in a line perpendicular to the axis, it will not usually be necessary to take two sets of readings 180 degrees apart, to correct for misalinement.

8.11.2 Checking angle with a test tool. One way to check for angle errors on thread gages is to use a precision ground test tool or cone point and light box. The thread plug is placed between the centers of the box and rotated until the thread root is about opposite the point of the test tool. The test tool then is pushed forward into the space until there is very little clearance between the point of the tool and the root of the thread. The tool and the thread are viewed through a jeweler's glass of about 7 power, or if the device is equipped with the microscopic attachment, the microscope is used (see fig. 189).

8.11.2.1 Each half angle of the thread is checked individually by rotating the plug enough to bring each thread flank against the edge of the tool. If any light shows between the tool and the thread flank after they have been brought together with slight pressure, test tools with other angles or special spacers for the basic test tool should be used until a perfect match is obtained. The error in the angle is known from the dimensions of the tools or

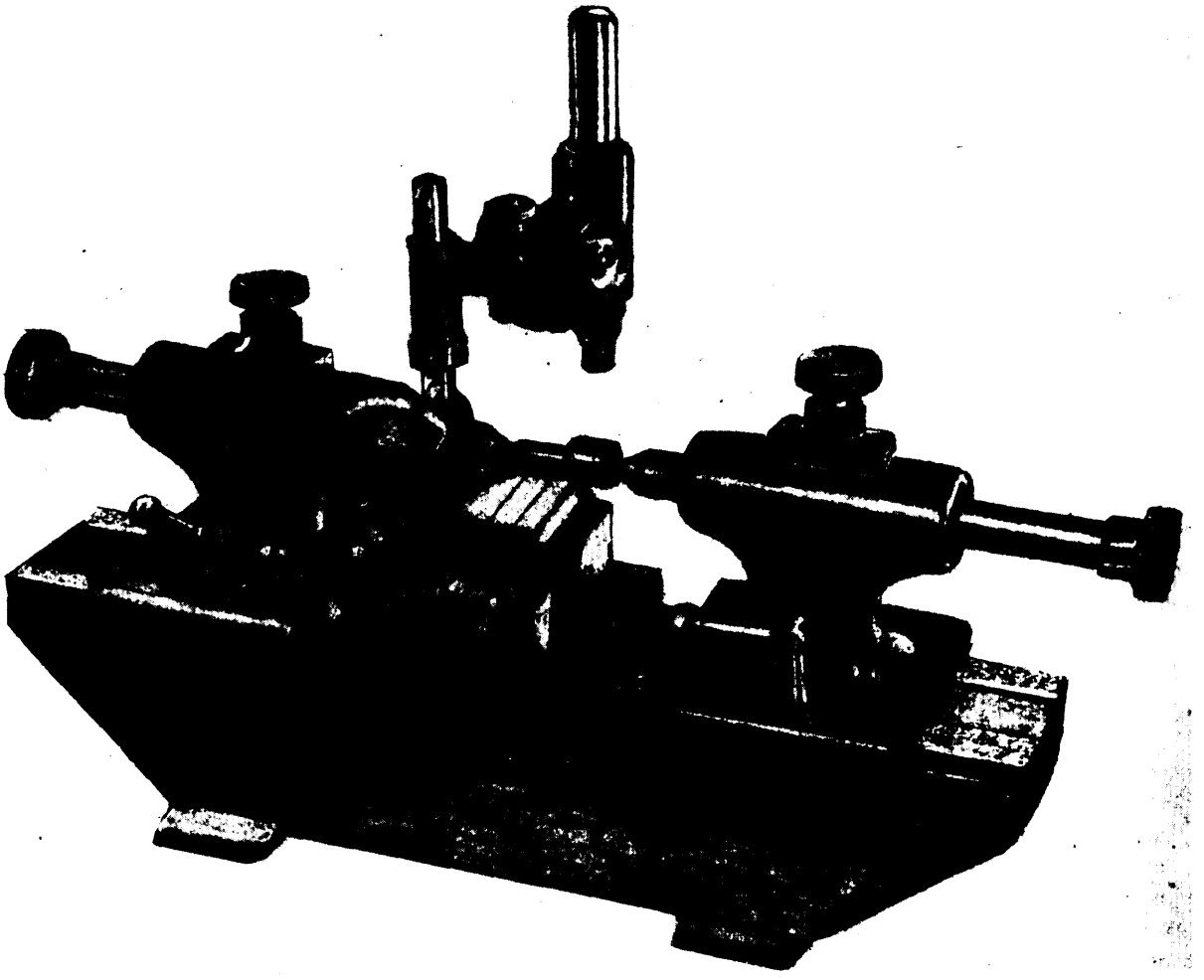

Figure 189. Checking thread angle by means of a test tool.

spacers required to bring about the proper fit (see fig. 190) .

8.11.2.2 The following precautions must be observed in this inspection:

a. The light box must be constructed so that the gaging edge of the test tool will be at exactly the same height as the axis of the plug, and perpendicular to it.

b. Do not use pressure greater than can be applied with the fingertips.

c. The test tool must be flat on the box and should not be pushed out of its position of perpendicularity with the thread axis.

d. Both the gage and the test tool must be absolutely clean.

e. All burrs must be stoned off the side of the tool.

f. Care must be taken not to nick the sides of the test tool because a badly nicked tool is useless.

8.11.2.3 This method is very accurate provided that all proper precautions are taken. When the helix angle of the thread is greater than 6 degrees, it is a satisfactory way of checking the thread angle. Another accurate method of checking the thread angle is the use of a tool maker's microscope equipped with knife-edge contacting members, using the same principle as the test tools.

8.11.3 Checking angle with an optical comparator. To inspect the angles of a thread plug gage in an optical comparator, mount the plug between the centers of the comparator and rotate the table through an angle equal to

Figure 190. Test tools and correction spacers for checking thread angle.

the helix angle of the thread. The error of the flank angle is determined by rotating the ground glass projection plate until one of the 30 degree lines is parallel to the image of the thread flank. The error in the angle is determined by the reading of the vernier scale at the side of the screen. It is very important that the centers of the projector be horizontal. This can be checked by setting the angle measuring scale at zero and noting whether the image of the major diameter of the threads is parallel to the horizontal line on the projection screen. If it is not, rotate the eccentric center until parallelism has been attained. If the major diameter is not straight, use a long plain plug which is known to have no taper. This measurement can best be made by moving the table of the machine until the shadow almost falls upon the 30 degree line, leaving a very thin sliver of light between the shadow and the line. The plug must be turned through the helix angle in order to obtain a clear image of the thread profile. The practice of focusing the projector so that one side of the thread appears to be clear, measuring the flank in question, and then focusing the projector so as to clarify the image of the other flank, is not correct because the lead of the thread causes parts of the gage in front and in back of the axial plane to interfere with the light rays, thereby causing a distorted image. This point can be understood by studying figure 191. Tables of the helix angles of commonly used American National thread sizes are given in 8.27.1. If it is not necessary to make an extremely accurate measurement of the thread angle, the helix angle can be found experimentally by rotating the table until both thread flanks are sharply defined on the screen.

8.11.3.1 The method of computing the helix angle can be understood by studying figure 192, which represents the upper half of a single thread turn spread out as if it were unrolled. Therefore, its length is equal to its cricumference. Accordingly, the length is equal to $\pi x E$, the pitch diameter of the thread in question. The amount which the thread advances in one turn is known to be L, the lead of the thread. Therefore, the tangent of the helix angle is equal to the lead divided by the circumference or, expressed mathematically:

N equals the number of thread turns per inch.

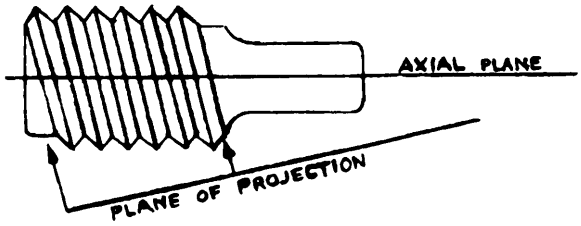

Figure 191. Relationship between axial plane and plane of projection.

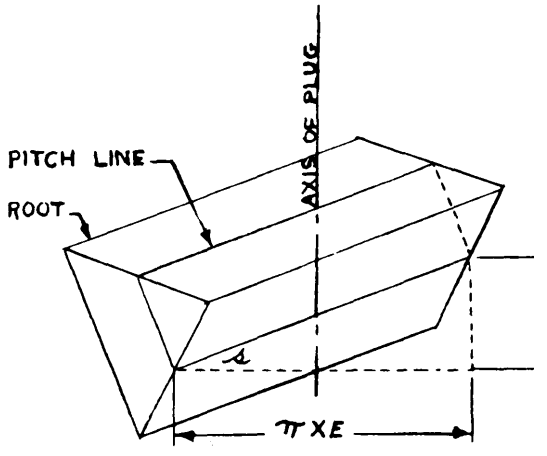

Figure 192. Computation of helix angle.

8.11.3.2 It will be noted that a screw thread actually has several circumferences, the largest at the major diameter and the smallest at the minor diameter. This, in turn, means that every t bread has several helix angles, depending upon which point on the thread flank is used for computing the angle. The pitch diameter, which is in effect an average diameter of the thread, is customarily used in computing the helix angle. The term "helix angle" always means the angle computed by this method unless some other method is specifically stated.

8.11.3.3 The flank angle of the thread as observed in an optical comparator is not the true angle because the included angle of American National threads is defined as 60 degrees in the axial plane, whereas the projector projects an image of the thread in a plane normal to the helix. This point is shown on figure 193, showing a top and a cross-sectioned view of a single turn of a thread space. It is necessary to employ a correction factor when measuring the angle of a precision thread by means of an optical comparator or by means of a tool maker's microscope which does not have knife-edge angle checking members.

8.11.3.4 In figure 193 let h equal the thread depth, p equal the pitch, s equal the helix angle, a equal the half angle of thread in the axial plane, and a' equal the half angle of thread in the plane of projection. Then:

$$\tan a' = \tan a \cos s$$

Tables giving the values of *a* versus a´ for various helix angles are given in 8.27.3. As a specific example, consider the computation of the correction factor for a thread plug for ¼ inch 20 NC–2 thread. By reference to tables in 8.27.1 we find that the helix angle of this thread is 4 degrees 11 minutes. By reference to the. table of flank angle correction factors, given in 8.27.3, it is found that the factor for 4 degrees 10 minutes, the value in the table nearest to the true value, is 3 minutes 56 seconds. Accuracy sufficient for inspection of an ordinary thread plug is obtained by dropping the seconds and assuming that the correction factor is an even 4 minutes. Assume that the angle of one flank as actually measured in the projector or microscope is 30 degrees 13 minutes and that the angle of the other flank reads 29 degrees 57 minutes. Then the true values will be 30 degrees 13 minutes+4 minutes =30 degrees 17 minutes, and 29 degrees 57 minutes+ 4 minutes= 30 degrees 1 minute. The correction factor is always added to the observed angle to find the angle of the thread in the axial plane. Since the accuracy of a projector or a tool maker's microscope generally is not closer than 2 minutes, it is not necessary to use correction

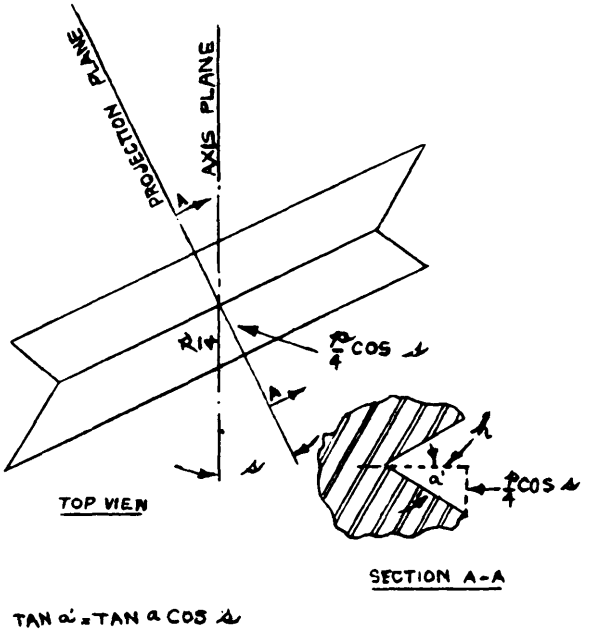

Figure 193. Correction factor for thread angle.

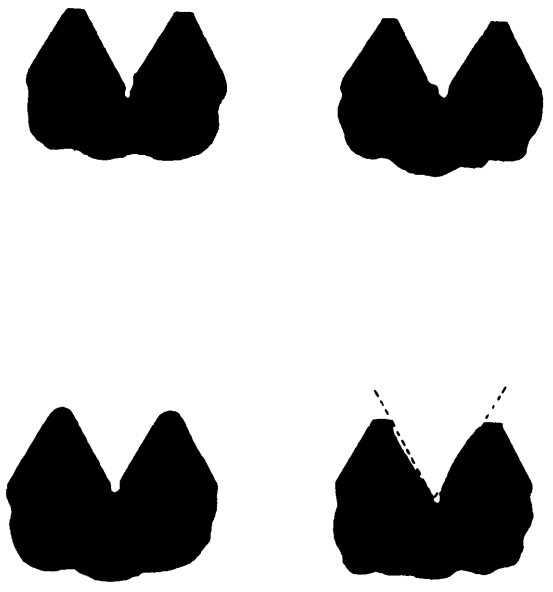

Figure 194. Common visual errors found in thread gages.

factors for flank angle of 60-degree threads unless the helix angle is 3 degrees or more. When the helix angle is less than 3 degrees, the correction factor is less than 2 minutes.

8.11.3.5 In addition to checking for the value of the flank angle, the thread should also be checked for general appearance while in the projector or microscope. Common faults in thread form are shown on figure 194.

8.113.6 There is no exact standard for the straightness of a thread flank. However, the flank of a good thread gage will not show any appreciable deviation in straightness when viewed in a projector or microscope. In no instance should the difference between the high point and the low point of the flank be as great as the permissible lead error (taken without consideration of plus and minus sign).

8.11.4 Checking angle with a tool maker's microscope. Thread angles may also be inspected with a tool maker's microscope. There are no special precautions in the use of this instrument other than that the work and the microscope lenses should be clean, and that knife-edge profile members must be brought against the thread flank gently.

8.11.4.1 Microscopes which do not have knife-edge members for contacting the thread flank must be tilted through the helix angle of the thread, and flank angle correction factors used to determine the true angle of the thread in the axial plane.

8.11.4.2 Microscopes with knife-edge contacting members have an advantage over the other type because direct measurement in the axial plane gives results which are more accurate, particularly when the helix angle of the thread is large. This instrument is also used to check the general appearance of the thread form.

8.11.5 Root. Thread root can be checked conveniently at the same time that the angle is checked. This can be done in two ways. The first way is to measure the distance between the lowest points on the straight surfaces of the flanks by means of a projector or microscope. (This is the distance X as shown on sketch A of figure 195). The second way is to place a special test tool with a point truncated to have a flat equal the maximum permissible width of thread root into the threads when the gage has been mounted on a light box, or to place lines marked on a special screen for projector or

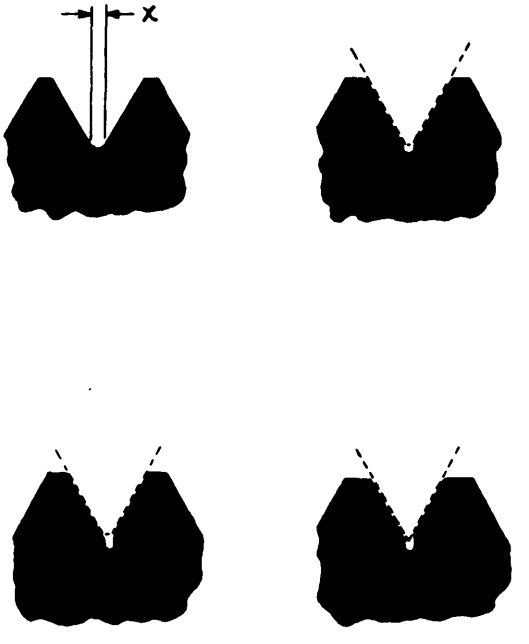

Figure 195. Root inspection of thread gages.

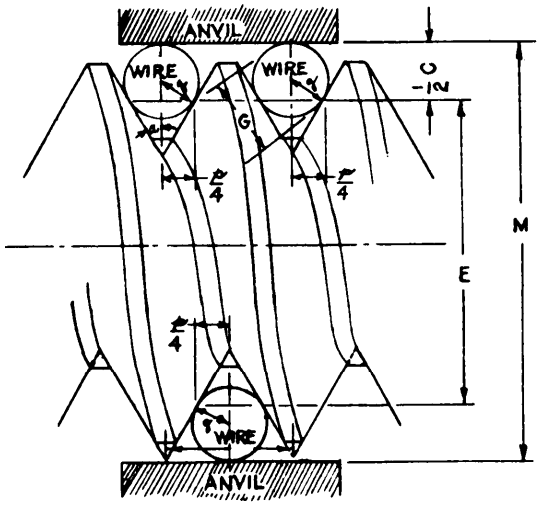

Figure 196. Three-wlre method of measuring pitch diameter of thread plug gages.

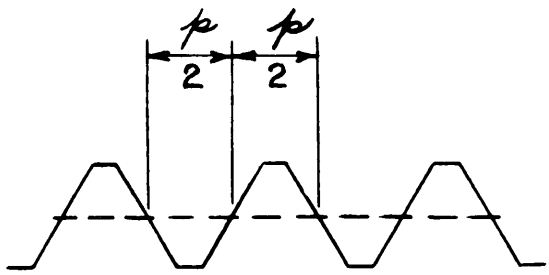

Figure 197. Pitch line.

microscope between the images of the thread teeth. This is shown on figure 195, where the dotted lines represent the test tool or the special forms drawn on the instrument screen. It is important to remember that the root of a "Go" plug gage should be cleared below a width of flat equal to p/4 or less, in order to make sure that the gage does contact the minor diameter of the component. The purpose of a "Not Go" plug gage is to measure the pitch diameter of the threads, and it does not make any particular difference whether the relief is slightly wider or narrower than nominal. The relief should be deep enough to clear a sharp "V" as shown on view D, in order to be sure that the component never wedges in the gage because of binding at a point other than the pitch diameter. On very fine pitch threads (32 and finer) where it is impractical to provide clearance at the root of the "Not Go" gage, the root should be as sharp as possible (generally about 0.002 inch in width).

8.11.6 Pitch diameter. Since mating threads, when assembled, generally bear along their flanks, the positioning of the flanks is the most important element determining the fit of the threads. The most satisfactory method for measuring the relative positioning of the thread flanks across the diameter is to measure over three precision wires placed between the thread flanks as shown on figure 196.

8.11.6.1 The best size of wire to use for this measurement is that which will contact the thread flanks halfway along their length (as referred to the fundamental thread triangle). The effect of angle errors is eliminated by the use of such wires. Best size wires contact the flanks along a line known as the pitch line. This line is defined as the line which equally divides the lands and the spaces of basic American National Thread Form (see fig. 197). The distance between the pitch lines on opposite sides of the thread is known as the pitch diameter.

8.11.6.2 To derive the formula for determining the best size wire for any given pitch of thread, consider the sketch shown on figure 198. Here, g is the radius of the wire, a is the half angle of the thread, and p is the pitch of the thread. By definition of the pitch line, the distance between the two points of contact is $\frac{p}{2}$ and the distance indicated in the sketch by g is $\frac{p}{4}$ times the secant of a. The diameter of the

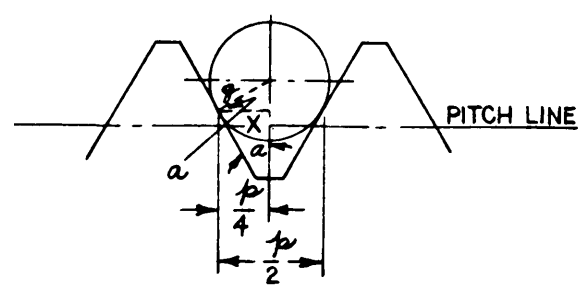

Figure 198. Best size wire.

measuring wire, G must be twice this amount or: $G = \frac{p}{2} \sec a$. In the case of 60-degree threads, computing this equation: G =0.57735p.

8.11.6.3 The method used to compute C, the constant to be subtracted from the reading over the wires to obtain the value of the pitch diameter is best understood by dividing the analysis into two steps.

a. The first step is to find Z, the distance from the top of any wire to the vertex formed by the thread flanks at their theoretical sharp V intersection (see figure 199). If g is the radius of the measuring wire used and a is the angle which the thread flanks make with the vertical, this distance is computed as follows:

$$Z = g + g \operatorname{cosec} a$$

b. The second step is to find W, the distance from the pitch line to the vertex formed by the theoretical intersection of the thread flanks (see fig. 200). By definition, the distance between the thread flanks at the pitch line will be $\frac{p}{2}$. Therefore, the top side of the triangle shown on figure 200 must equal $\frac{p}{4}$ in length. The required distance equals:

$$W = \frac{p}{4} \cot a$$

The distance from the top of the wire to the pitch line will obviously be equal to the difference between the two distances previously computed:

$$Z - W = g + g \operatorname{cosec} a - \frac{p}{4} \cot a$$

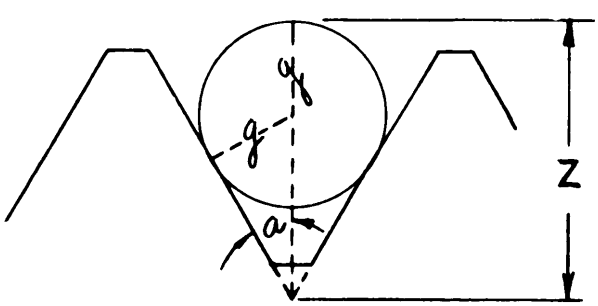

Figure 199. Height of wire above vertex.

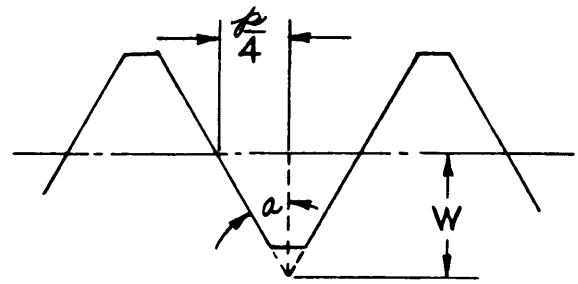

Figure 200. Height of pitch line above vertex.

In taking a measurement by means of the three-wire method, the difference between the top of the wire and the pitch line on both sides of the threaded piece must be taken into consideration.

Therefore:

$$C = 2\ (Z - W)$$

$$2g = G$$

$$P = \frac{1}{N} \text{ (for single thread screws)}$$

$$C = G\ (1 \text{ plus } \operatorname{cosec} a) - \frac{\cot a}{2N}$$

E, the pitch diameter, equals *M*, the measurement over the wires, minus *C*

Therefore:

$$E = M \text{ plus } \frac{\cot a}{2N} - G\ (1 \text{ plus } \operatorname{cosec} a)$$

The above equations do not take into account the effect of the helix angle on the measurement of the pitch diameter with wires. However, this effect is so slight for all threads of the American National Coarse and Fine Pitch Series that the National Bureau of Standards has established the practice of neglecting the correction for helix when measuring the pitch diameter of these threads.

8.11.6.4 However, when Multiple Start threads or National Special threads with unusual combinations of pitch and diameter are measured, it often is necessary to take this factor into account. In such cases, the constant printed on the wire container does not apply, and the constant must be computed from special equations. Since the pitch line must lie in a plane through the axis of the threads by definition, as shown on figure 200, the distance from the pitch line to the vertex at the root of the threads will be the same regardless of the

helix, and the equation specified in 8.11.6.3 will be accurate regardless of how steep the helix angle is. However, a correct computation for the distance from the top of the wire to the vertex cannot be made unless figure 199 is assumed to represent a view in a plane perpendicular to the axis of the thread measuring wire. This plane will also be normal to the helix of the threads because the thread wires aline themselves approximately with the helix. Therefore, the angle assumed for solving the triangle shown in this view should not be *a*, the basic value of the half angle of the thread in the plane through the axis of the threads. Instead, it should be *a'*, the value of the half angle of the threads in the plane normal to the helix. (For an explanation of this relationship, see figure 193 and the accompanying text.) Therefore, the formula given in 8.11.6.3 would be more accurate if a´ were substituted for a in the first term, as follows:

$$C=G\ (1+\text{cosec}\ a')-\frac{\cot a}{2N}$$

With this correction, the equation for the pitch diameter becomes:

$$E=M+\frac{\cot a}{2N}-G\ (1+\text{cosec}\ a')$$

When substituting values in formulae specified in 8.11.6.4, use the actual measured values of the thread angle instead of the basic values. For a' use the average of the two flank angle values obtained by observing the flanks in the line through the helix. For a use the average value of the flank angles in the axial plane as computed by the formulae given in figure 193. If a wire which will contact the flanks within a few thousandths inch of a pitch line is not available, it is preferable to measure the thread angle directly in the axial plane by means of the tool makers' microscope, by means of test tools, or by computing the value after taking measurements over various sizes of wires. Assuming the basic pitch diameter, compute the value of the helix angle at the point of contact of the wire which is to be used in measuring the pitch diameter. (Use the actual diameter at the point of contact, instead of the term E and equation specified in 8.11 .3.1.) Using this value of the helix, compute the value of the half angle in the plane normal to this helix with the formulas shown on figure 193. According to the practice of the National Bureau of Standards, the formulas specified in 8.11.6.3 may be used to compute the pitch diameter except when the value of $\frac{GS^2}{2}$ cos a cot a is greater than 0.00015 inch. When measuring American National threads with best size wires, this condition does not occur unless the helix angle is greater than 6 degrees. In other words, the effect of the helix angle may be neglected unless this value is greater than 6 degrees.

8.11.6.5 The following are the principal steps in measuring the pitch diameter of a thread plug gage:

a. Remove the gage handle.

b. If the thread gage has an average pitch diameter tolerance (between 0.0002 and 0.0005 inch), the measuring instrument used should be one with which 0.0001 inch can be read directly and 0.00001 inch can be estimated. The measuring instrument must also have means for controlling the contact load at 1 or 2½ pounds.

c. Set the pressure regulator for 2½ pounds if the threads to be checked are 20 pitch or coarser. Use a l-pound load if the pitch is finer than 20.

d. If the plug is small (about 1 inch or less in diameter), stand it on the elevating table in a vertical position. Then bring the anvils together until they almost touch the major diameter and slide the three measuring wires into position between the threads in the relationship shown on figure 196. Adjust the anvils to bear on all wires as determined by "feel" in sliding the wires. If the plug is heavy, it can be set up with the major diameter in contact with the elevating table. This will permit the plug to roll back and forth on its major diameter to center itself between the anvils. The three wires are stood vertically between the plug and the anvils when the measurement is taken by this method. Plugs which are too large to be checked when resting on the major diameter can be set in place with the face horizontal and with a small shaft between the face of the plug and the elevating table in a manner similar to that used for measuring large plain plugs (see fig. 162). Be sure that each wire is

in firm contact with an anvil by moving the plug a bit and by pushing each wire a little with the fingers before the anvils are brought up to full pressure. The wires must be free to adjust themselves in proper alinement with the threads. No rubber bands, threads, wires or other supports should bind the wires while the actual measurement is made. If the wires are stood in a vertical position they should not touch the elevating table during the actual measurement. Measure several points about the circumference of the gage, record the maximum diameter to five decimal places, and subtract from it the constant given on the container for the wires. The result will be the pitch diameter accurate to four decimal places. This process should be followed at the front, center, and back sections of the gage. The pitch diameter at all three points must be within the limits specified on the gage drawing.

8.11.7 Major diameter. The major diameter of a thread plug should be measured at the front, center, and back by means of a precision measuring instrument in the same manner that a plain plug is checked. Measurement for roundness should be made by turning the gage to different positions and recording the largest diameter as before.

8.11.8 Concentricity. The major and the pitch diameters of all thread plug gages must be concentric within the tolerance limits of the major diameter. The concentricity of these two elements can be checked with the aid of three measuring wires and a "V" block. Stand the wires in the "V" block, two on one side and one on the other, parallel to the ends of the plug. Place the plug on the wires and rotate it with an indicator gage in contact with the major diameter.

8.11.9 Finish. Thread gages have poor finishes more often than other types of gages. The surfaces of the threads should be inspected with a magnifying glass or jeweler's glass of about four power. If any chatter marks (small ridges), cracks, unfinished spots, or other irregularities are revealed, the gage should be rejected. If the applicable gage drawing requires that the thread flanks be lapped, the gage should be rejected unless this operation has been performed.

8.12 INSPECTION OF THREAD RING GAGES

8.121 Thread form. The form of internal threads can best be inspected with casts of copper amalgam, dental wax, or plaster of paris. The casts are inspected by the same methods used for ordinary external threads.

8.12.1.1 Before the cast is made the ring gage should be thoroughly cleaned with a good solvent and dried. If a corrosion inhibitor is not available, or if the casts tend to stick, the gage can be painted with a very thin coat of grease, such as a thin mixture of gasoline and vaseline. Great care should be taken to make the coat of grease as thin and as uniform as

8.12.1.2 Copper amalgam is heated, pressed with mortar and pestle, and then worked into a plastic state. The excess mercury can be squeezed out with a small piece of chamois. The amalgam is worked into the threads in small amounts with the aid of a dental tool. After enough thickness has been built up to form a solid piece considerably higher than the thread crests, the cast is allowed to set for a time and then is removed. A sharp rap will assist in loosening the cast from the ring.

8.12.1.3 Dental wax used for casts preferably should not be melted and poured in, but should be softened in warm water and pressed into the threads with the fingers. The gage should be warmed slightly before pressing in the wax in order to prevent sudden chilling of the wax.

8.12.1.4 When plaster of paris is used a corrosion inhibitor must be added to the water used to mix the plaster in order to prevent corrosion of the gage. A solution of potassium bichromate (K_2Cr_2C7 crystals) added in a proportion of 1½ ounces to a quart of water will serve for this purpose.

8.12.1.5 A plaster of paris cast is made by clamping the lower portion of the gage between two flat plates, as shown on figure 201. The plaster is mixed with water until the resulting mixture flows easily (50 grams of plaster to 40 cc. of liquid will give a good mix for most

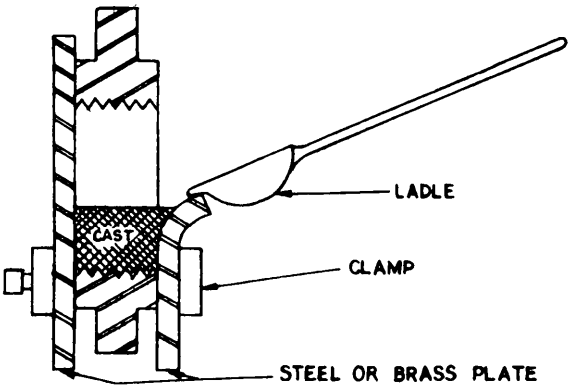

Figure 201. Method of making cast of thread ring gage.

threads). It is then poured into the gage until the maximum depth equals about one-quarter of the ring diameter. A bolt or other headed object can be placed headfirst in the liquid in order to facilitate removal and handling of the cast after it is hardened.

8.12.1.6 The cast should be pulled shortly after it solidifies. It must be inspected immediately after removal. Casts made of plaster of paris generally will retain their form only about ½ hour after hardening.

8.12.1.7 Another way to make casts of internal threads is to place a piece of soft lead on the threads, place a mandrel over the lead, and squeeze the mandrel and gage together in a vise, as shown on figure 202. This method is not quite so accurate as the other method, but it has the advantage of being very rapid and easily performed.

8.12.1.8 When placed in the projector or microscope the cast must be adjusted until the image of the threads is horizontal. The cast can be twisted to adjust for the helix angle by rotating until the shadows of the threads are as narrow and sharp as possible.

8.12.2 Lead. The lead of thread ring gages can be inspected by making a copper amalgam cast of the threads as specified in 8.12.1.2. The lead of the threads on the cast is measured by means of a precision lead checking machine. If

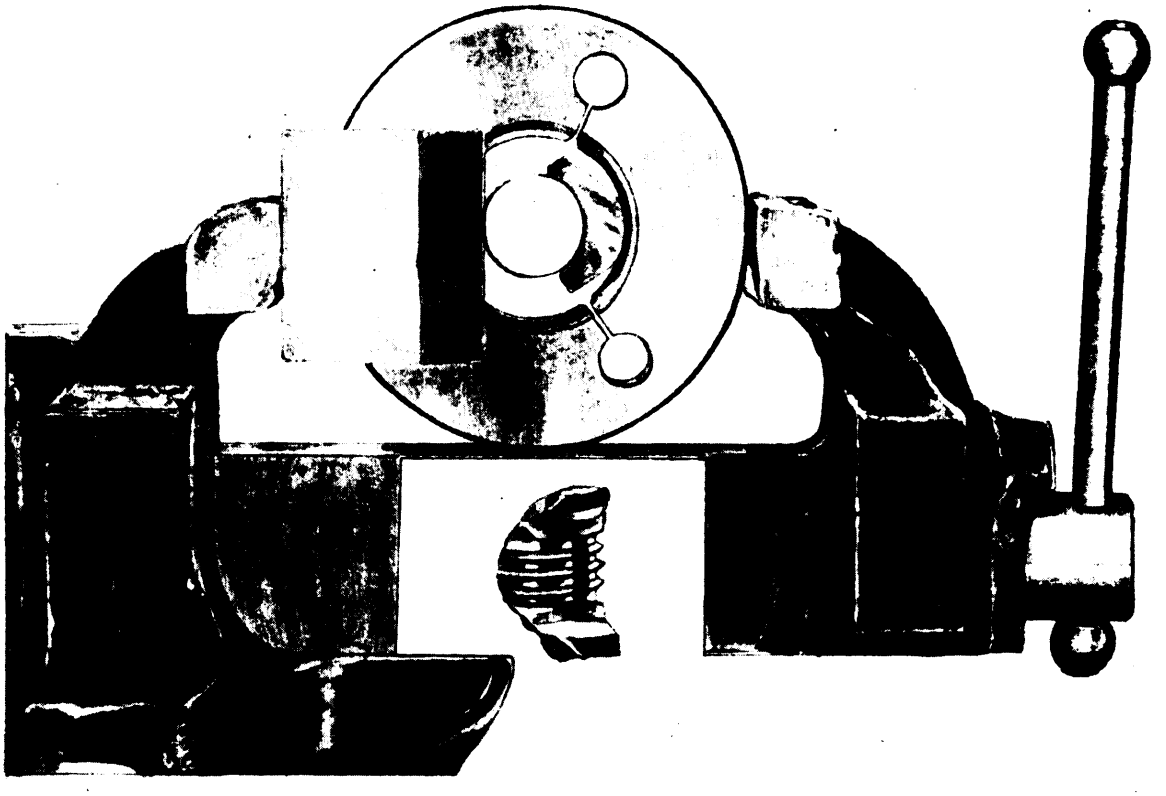

Figure 202. Making lead cast of thread ring.

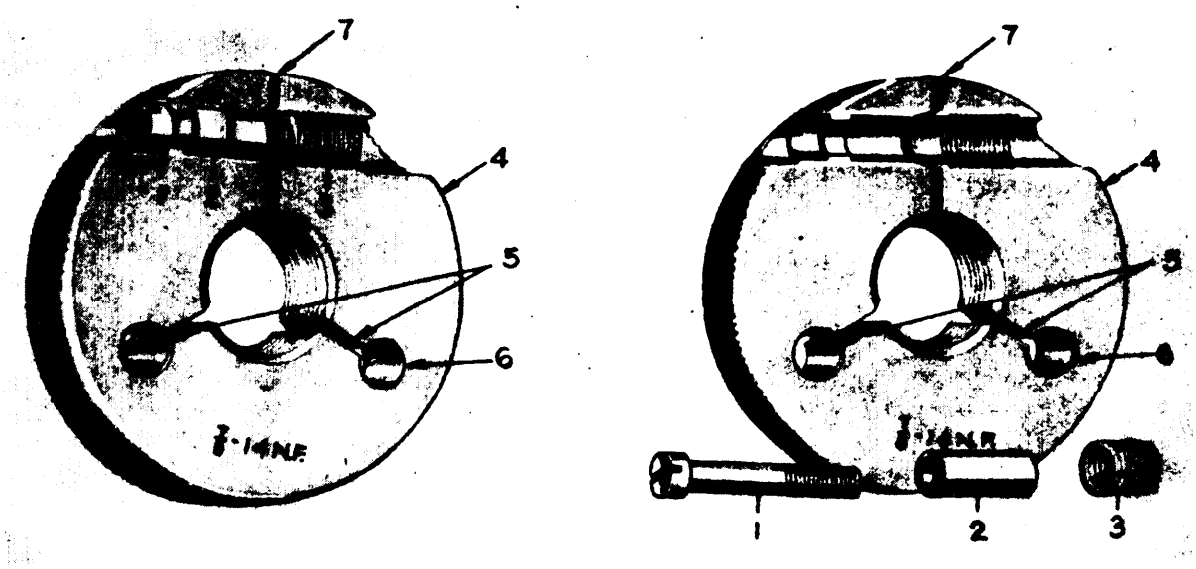

Figure 203. American gage design standard thread ring locking device. 1, Locking screw; 2, Sleeve; 3, Adjusting screw; 4, Body; 5, Adjusting slots; 6, Adjusting slot terminal hole; 7, Locking slot.

it is not practical to set up the cast in a lead measuring machine, the cast may be measured with a contour projector or a tool maker's microscope.

8.12.2.1 The angle is measured with the contour projector by alining the image of one thread flank with a 30-degree line on the screen, setting the lateral micrometer at the zero point, and noting the distance the micrometer must be advanced to aline the flanks of the other threads with the W-degree line. The two requirements in positioning the cast for this operation are that the cast must be horizontal and with the thread axis parallel to the line of motion of the lateral micrometer.

8.12.2.2 The placement of the cast in the projector or the microscope will be greatly simplified if a slotted plug of the same size as the minor diameter of the ring is available. The material used for the cast is forced between the plug and the ring at a point where it will fill the slot and the adjacent threads. After the cast has hardened the plug is taken out and the cast removed. The cast should not be removed by unscrewing it with the plug. In the actual inspection, the cast is reinserted in the slot of the plug and the plug mounted between the centers of the microscope or projector.

8.12.3 Pitch diameter. The pitch diameter of adjustable thread ring gages is adjusted by fitting the ring to a setting plug of known dimensions. The various parts of the thread ring adjusting assembly are shown on figure 203. The principal steps in the adjusting operation are the following:

8.12.3.1 Clamp the handle of the setting plug between the jaws of a vice or to some convenient object.

8.12.3.2 Turn the locking screw counterclockwise enough to loosen the locking assembly and then turn the adjusting screw clockwise until the ring gage is large enough to be threaded on the setting plug.

8.12.3.3 Turn the adjusting screw counterclockwise until the ring can just be rotated on the plug with firm pressure of the hands. A little oil on the check plug will avoid excessive wear without materially affecting the accuracy of the adjustment

8.12.3.4 Turn the locking screw in a clockwise direction until it is fully tightened, and rotate the ring on the plug to see whether it is still a good lit.

8.12.3.5 Generally a ring gage must be fitted by alternately adjusting both the adjusting screw and the locking screw until the proper

fit has been obtained. The locking screw must be tightened securely before each trial of the fit of the ring.

8.12.3.6 Turn the ring on the plug a distance of about two threads on each side of the ring and note whether there is any shake. Shake indicates either a bellmouth condition or the presence of a lead error in the ring. In either case this is sufficient reason for rejecting the gage.

8.12.4 Concentricity of pitch and minor diameters. It is necessary to check the concentricity of the pitch and the minor diameters of all thread ring gages because lack of concentricity will have the same effect as an undersized minor diameter. The manufacturer can be deprived of a large proportion of the tolerance on the minor diameter of the component, or the gage may even fail to function if proper concentricity is not maintained.

8.12.4.1 The following procedure generally is the most satisfactory in making this check:

a. Thread a full form setting plug almost completely into the ring, allowing a little more than one full thread turn of the plug to stand up above the face of the ring.

b. Chuck the ring on a rotating face plate and center the ring by running a test indicator over the major diameter of the protruding thread on the setting plug.

c. Remove the thread setting plug and rotate the ring, using the test indicator to determine the concentricity of the minor diameter. The concentricity should be such that the measured minor diameter, minus the total variation in indicator reading, is not less than the minimum limit of the minor diameter as specified on the gage drawing.

8.12.4.2 If a large number of thread ring gages of the same size are frequently inspected in the laboratory, it is worth while grinding a cylindrical pilot on a thread setting plug for this size. This cylindrical section will greatly facilitate centering the thread ring when it is mounted on a face plate.

8.12.4.3 If the thread ring gage has flanges with precision ground outside diameters, the test for concentricity can be made more quickly and accurately. In this case, thread the set plug completely into the ring and mount the plug between centers. Rotate the plug and indicate over the outside diameter of the flange for concentricity. Remove the thread plug and insert the plain plug used for checking minor diameter and again mount the plug between centers and indicate over the outside diameter of the flange. A properly made gage will be concentric in both instances.

8.12.5 Minor diameter. This dimension is inspected with a check plug, if one is provided with the gage. If not, it generally can be measured with precision internal micrometers (John Bath Co., or equivalent), gage blocks with accessories, or adjustable limit gages.

8.13 INSPECTION OF TAPERED THREAD PLUG GAGES

8.13.1 Angle and relief. The thread form of tapered thread plugs can be inspected by methods similar to those used on ordinary thread plugs.

8.13.2 Lead. If a precision lead checking machine with attachment for measuring the lead of taper threads is not available, it may be necessary to check the lead on a contour projector. This is done by placing the plug between centers and rotating the stage (or the thread measuring fixture) through the helix angle. Aline the image of a thread flank on the right-hand end of the gage with one of the 30-degree lines on the projection screen. Advance the micrometer until the image of the flank of the next thread tooth is in line with the 30-degree line on the projection screen. Note the distance by which the micrometer was advanced in making this change.

8.13.2.1 Divide the included taper per inch by two, multiply by the lead and then multiply by the tangent of the half angle of the thread. Add this quantity to the difference in micrometer readings determined in 8.13.2 in order to obtain the lead from the first thread to the second thread on the thread plug. In measuring the lead from the first thread to the third thread, two times this correction factor must be added to the differences in micrometer readings, and in measuring from the first thread to the fourth thread, three times this correction factor must be added to the difference in the micrometer readings, etc.

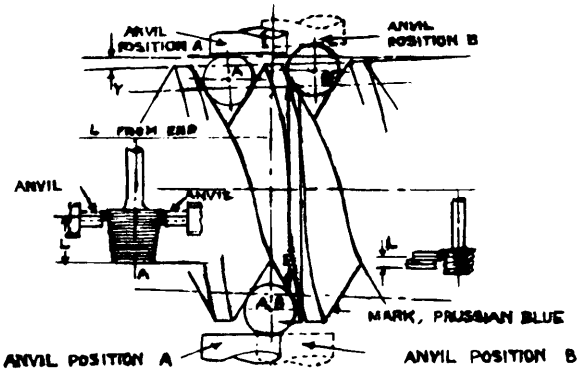

Figure 204. Measurement of pitch diameter of taper thread gages by the two-wire method.

8.13.2.2 If a Bausch and Lomb projector or similar projector is being used, the micrometer incorporated in the thread measuring fixture should be used rather than the longitudinal micrometer on the cross slide table for this measurement.

8.13.3 Pitch diameter and taper. The taper of a tapered thread plug makes it impractical to measure over three wires when the gage is in proper alinement for measuring the pitch diameter. For this reason, the pitch diameter is measured over two wires. The diameter at any given point along the axis is determined by placing one wire at this point and by taking the average of two measurements made with the other wire in two different positions, each position being a distance of p/2 above or below the point where the pitch diameter is being determined (see fig. 204).

8.13.3.1 The first step in measuring the pitch diameter of tapered thread plugs is to mount the plug between centers and to indicate over the front face of the rotating plug to check for perpendicularity in the same way plain tapered plugs were checked. If the face is not perpendicular, the gage must be set up between centers, clamped into position, or mounted accurately vertical by some other method. The back face and the surface of the step should also be checked for perpendicularity with the axis. The gage should be rejected if these surfaces are not perpendicular within limits such that the error will not be noticed when observation is made to see whether these surfaces are flush or below the component when the gage is in actual use. The length of the gage and the depth of the step can be measured directly with micrometers.

8.13.3.2 In order to establish the diameter of the plug with reference to one end or a given point along the axis of the plug, the wire used to measure the pitch diameter must be placed at a known distance from the front face of the plug. This is accomplished by placing a conical gage block accessory, having an included angle equal to that of the thread, on a stack of gage blocks, and rotating the thread plug until the point of the accessory fits exactly between two threads (see fig. 205). The proper location is not determined by feel, but by sighting through the threads until the conical point shuts out light on both thread flanks when it is pushed forward into the threads. A mark is made on the thread flank directly above the point where the contact was made, in order to locate the point. The height of the gage blocks used in this operation should be a little greater than one and one half times the pitch to permit measurement near the front face of the plug and still leave room for a wire on the opposite side of the plug a half pitch lower than the established height.

8.13.3.3 The next step is to set the gage up in a hold-down fixture and to place it between the anvils of a measuring device with the plug turned so that the mark made in Prussian blue will be directly opposite one of the anvils. Once this position has been established, it is important not to rotate the gage until all measurements have been completed. One measuring wire then is placed under the locating mark in the position formerly occupied by the conical point of the gage block accessory. Two readings over the wire are taken, one with a wire on the opposite side placed ½p lower than the fixed wire, and the other with the wire on the opposite side placed ½p higher than the fixed measuring wire. The fixed wire then is removed and reinserted between the thread flanks at a point as near as possible to the back face of the gage. Two readings are again taken as before.

8.13.3.4 The computations necessary to figure the pitch diameter and the taper from measurements made in this manner are ex-

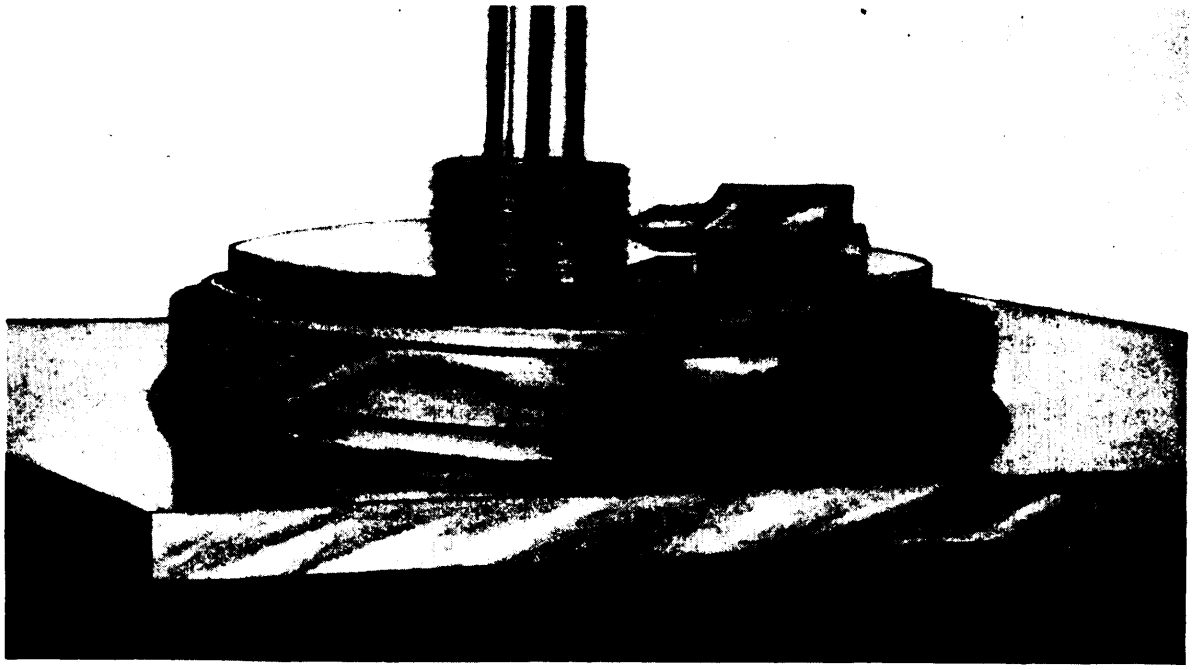

Figure 205. Locating height of fixed measuring wire.

plained in figure 206. The tolerance on the pitch diameter is specified at only one point on the gage drawing. However, this is generally construed to mean that the pitch diameters at all points along the length of the gage should not differ from the basic pitch diameter at the point in question by an amount greater than the tolerance on the pitch diameter given in the drawing. The basic pitch diameter at the point in question is computed by triangulating from the given basic pitch diameter using the basic taper.

8.13.3.5 The permissible variations in taper are sometimes construed to be limited only by the restrictions on the pitch diameter. However, a tapered thread gage should preferably have a taper which conforms to nominal within 0.0001 inch over the length of the gage. This is because close conformity to the specified taper will permit more even wear on the gage and will provide a better bearing surface for performing the gaging operation.

8.13.3.6 In order to illustrate the methods used to compute the pitch diameter and the taper, the work required to do this for the ta-

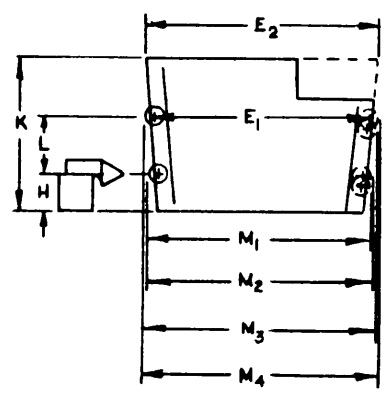

GIVEN:- $M_1, M_2, M_3, M_4, H, K, p$

$T = \left(\frac{M_3 + M_4}{2} - \frac{M_1 + M_2}{2}\right) \div L$; T = INCL. TAPER PER I

$L = np$; p = THD. PITCH n = NO. OF THDS.

$E_1 = \frac{M_3 + M_4}{2} - C$; E_1 = PITCH DIAMETER AND C = WIRE CONSTANT FOR p

$E_2 = (K - L - H)\,T + E_1$, E_2 = PITCH DIAMETER AT AT LARGE END OF GAGE

Figure 206. Computing pitch diameter and taper of taper thread plug.

pered thread plug gage specified in figure 207 will be given. Assume that the following actual measurements were made on this plug:

M_1= 1.03843 K= 0.4613
M_2= 1.03394 H= 0.1200 (selected)
M_3= 1.04744 p= 0.071429 (specified)
M_4=1.05191 L= 3 threads (selected)

The nominal value of the pitch (p) can be used instead of attempting to measure this distance directly because any lead error in the gage will not have any appreciable effect on the computations. The value of p can be found by referring to any of several standard tables of thread elements. If these are not available, it can be found by dividing one by the number of threads per inch, in this case, 1/14.

Taper (T) =

```
  1.03843          1.05191
  1.03394          1.04744
 ---------        ---------
2) 2.07237       2) 2.09935
 ---------        ---------
  1.03618          1.04967

      1.04967
      1.03618
      -------
      0.01349

      0.01349
     ---------
3×0.071429=0.06295 incl. T. P. I.
```

E_1, the pitch diameter at the height 0.3343 inch, =

```
  1.04967
– 0.06192
 --------
  0.98775
```

E_2, the pitch diameter at the large end of the gage, =

```
  0.4613
 –0.2143
 -------
  0.2470
 –0.1200
 -------
  0.1270

  0.1270
 X 0.06295
 ---------
  0.00799
+ 0.98775
 ---------
  0.99574
```

Since this differs from the nominal pitch diameter of 0.99560 by only +0.00014, the pitch diameter of the gage is within drawing specifications.

The error in taper equals:

```
  0.06295
– 0.0625
 --------
  0.00045 per inch
```

The error in taper over the length of the gage equals:

```
     0.00045
   X 0.4613
 ----------
about 0.0001
```

Therefore, the requirement that the taper error be within 0.0001 for the length of gage is fulfilled. We also know that the actual pitch diameter at the front face of the gage differs from the basic by:

```
+ 0.00014
 0.0001
 -------
+ 0.00004
```

8.13.3.7 The time required to measure the pitch diameter and the taper of tapered threads can sometimes be shortened by the use of a taper thread checking fixture. The construction of this fixture and the manner in which it is used are shown on figure 208. The roll which is rested against the front face of the plug should be of proper size to contact the face of the plug near its center. This is to eliminate the effect of any possible error in the perpendicularity of the plug face. Other than the roll diameter, the dimension of the fixture can be any convenient length, provided the proper calibration is made. A sketch illustrating the geometry involved in making this calibration is shown on figure 209. The calibrated value of DC as computed by this method should be marked on each fixture for all sizes of rolls commonly used. The manner in which the fixture is actually used will be illustrated by describing the measurement of the pitch diameter of a 1¼–11½ N. P. T. plug gage. The steps in this process are as follows:

a. Select the roll whose diameter is closest to the diameter of the plug at the small end, and fasten it in place on the fixture by means of a holding screw.

b. Place two wires under the gage far enough apart to maintain a base for supporting the gage

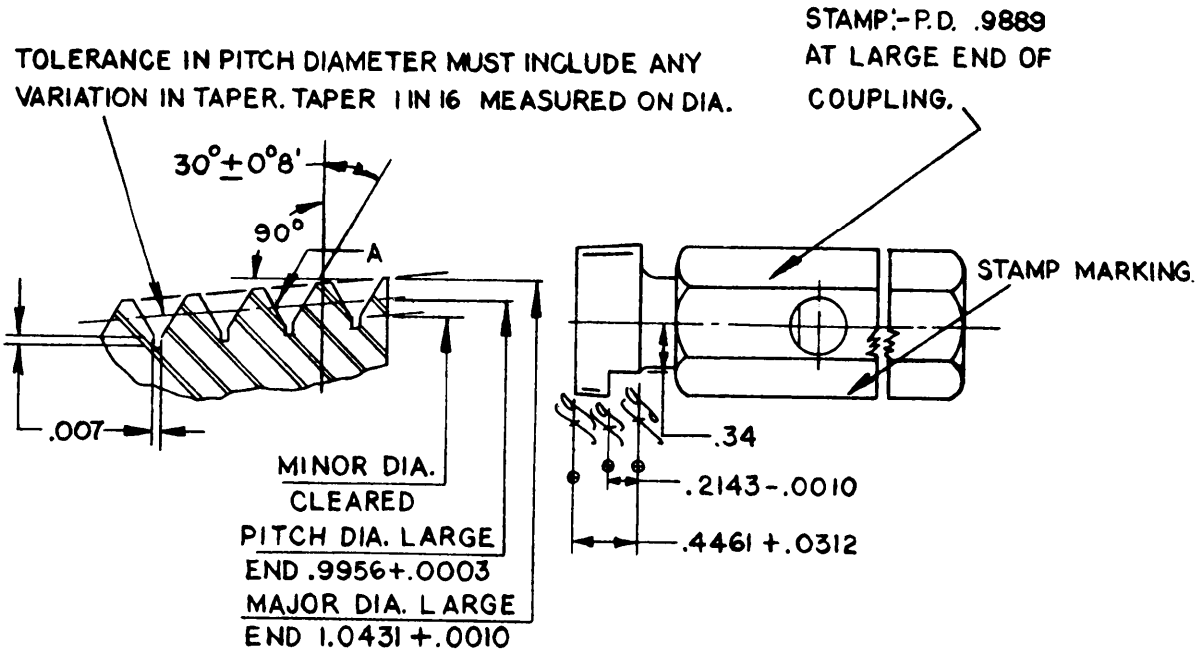

Figure 207. Specification—¾–14 N. P. T. thread plug gage.

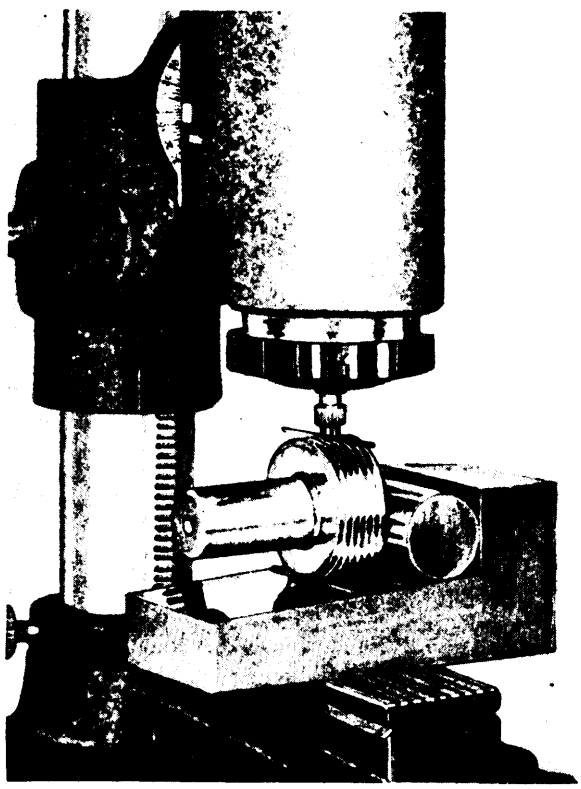

Figure 208. Set-up for measuring pitch diameter with taper fixture.

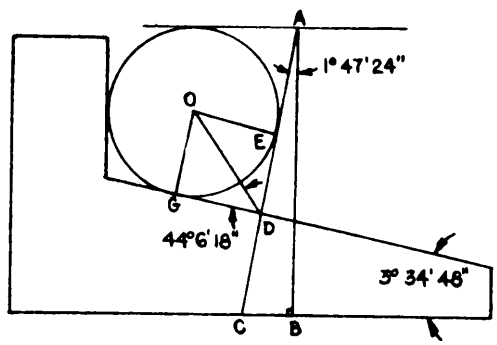

GIVEN:- AB AND OE

DE = EA = OE COT 44° 6' 18"

AC = AB SEC 1° 47' 24"

DC = AC - DE - EA

DC = AB SEC 1° 47' 24" - 2 OE COT 44° 6' 18"

Figure 209. Calibrating taper thread fixture.

and push the face of the gage tightly against the roll. It is important to make sure that the face of the gage remains fully in contact with the roll during the entire measurement.

c. Place a measuring wire between the threads at the top of the gage and determine the dis-

tances from the top of the wire to the bottom of the fixture by indicating over the wires with an indicator or measuring device which has a flat anvil. Take measurements near the front, center, and back of the gage.

d. Rotate the gage and take additional measurements in order to check out-of-round.

e. Assuming a given basic pitch diameter of 1.5571 at the small end of the plug and a value of DC for the roll and fixture in question of 0.9164, compute the nominal distance between the top of the wire and the base of the fixture as follows :

Find the basic measurement over the wires by adding the wire constant for 11½ pitch to the given pitch diameter.

$$\begin{array}{r} 0.07531 \\ 1.55710 \\ \hline 1.63241 \end{array}$$

Add this to the calibrated value of DC and multiply by the cosine of 1 degree, 47 minutes, 24 seconds.

$$\begin{array}{r} 0.91640 \\ 1.63241 \\ \hline 2.54881 \end{array} \text{ X } 0.99951 = 2.54756$$

Therefore, if the plug being checked was made exactly to the basic dimensions given on the gage drawing, the height of the measuring wire above the base of the fixture would be 2.5476 inches, measured to the nearest 0.0001 inch.

f. The amount of error in the gage is found by taking the difference between the heights actually measured over the top of the wire and 2.5476.

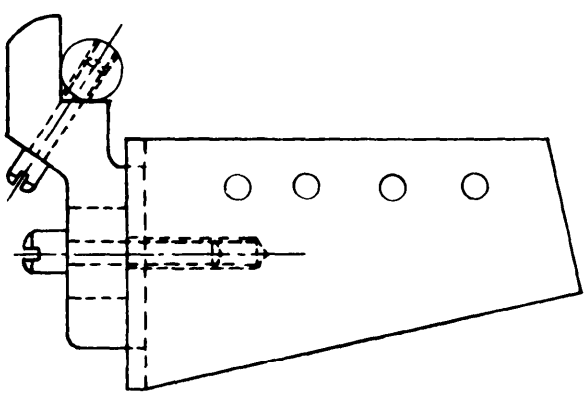

Figure 210. Taper thread checking fixture.

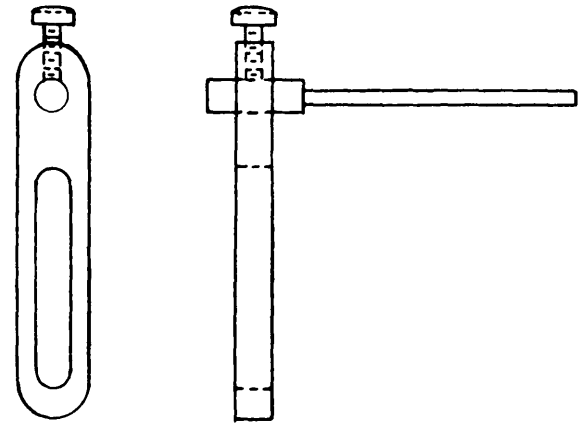

Figure 211. Hold-down wire for taper thread checking fixture.

8.13.3.8 Another type of fixture for measuring the pitch diameter of tapered threads is shown on figure 210. Although this fixture will be somewhat more expensive to manufacture accurately than the one described above, it has an advantage in that only one roll is required. This roll can be moved up and down, making it possible to contact the front face of all sizes of plugs exactly in the center. A further advantage is that only one calibration number (DC) is needed for all sizes of plugs.

8.13.3.9 The holding wires shown on figure 211 are screwed to the sides of the fixture in a position such that the wires will rest between the threads at the top of the plug. If the wires are made snug enough to give a bit of tension, this will hold the gage in position and permit the checker to use two hands in taking the measurements. Usually two holding wires, one on each side of the fixture, are sufficient.

8.13.4 Major diameter. The major diameter of a tapered thread plug can be measured over rolls by placing gage blocks over the thread crests and then measuring across them by the same method used to measure plain tapered plugs (see fig 212). The computations are the same except that a factor to allow for the thickness of the gage blocks, 2t sec A, must also be subtracted from the over-all reading.

This gives the following formula for finding the diameter of the plug at the base or at any

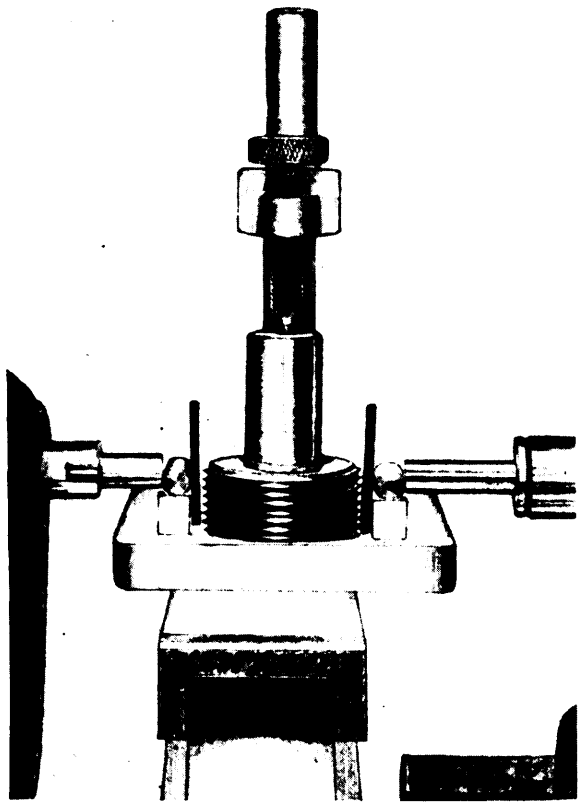

Figure 212. Measuring major diameter over rolls.

point level with the stacks of gage blocks used to support the rolls: (see fig. 213).

$$D = D_1 - 2r\left(1 + \cot\frac{90° - A}{2}\right) - 2t \sec a$$

D = major diameter small end of gage
t = thickness of gage blocks
r = radius of measuring rolls
D_1 = over-all measurement over the rolls
A = half angle of taper of the plug

8.13.4.1 The actual value of A can be computed from the over-all measurements by use of the following formula:

$$\frac{D_2 - D_1}{2h} = \tan A$$

In the case of American National pipe taper threads, the included taper should be 0.0625 per inch of length, and the half angle of taper should be 1 degree, 47 minutes, 24 seconds.

8.13.4.2 The major diameter of tapered thread plugs can also be checked by means of a sine bar and roll in the same way that a plain tapered plug would be checked, or by placing the plug in the fixture previously described for measuring the pitch diameter of tapered threads. If the latter method is used, the major diameter of the plug is set directly on the surface of the fixture, and indicator readings are taken over the thread crests at the top of the plug. The height of a gage with exactly basic major diameter above the base of the fixture can be found by adding the basic value of the major diameter at the front of the plug to the calibrated value of DC and then multiply the sum of these two figures by the cosine of 1 degree 47

8.13.5 Convolution. It is sometimes required that the threads on a tapered thread plug gage be cut back or convoluted one full turn near the ends of the gage in order to avoid feath-

8.14 INSPECTION OF TAPERED THREAD RING GAGES. The thread form and the lead of tapered thread ring gages can be inspected by the same methods used on plain thread ring gages. However, relief or clearance at the root of gages for pipe threads is always required instead of being optional as in the case of ordinary "Go" thread gages. The pitch diameter is checked by screwing the ring on a check plug. The ring should be turned down as tightly as moderate hand pressure will allow. The check plug then is stood upright

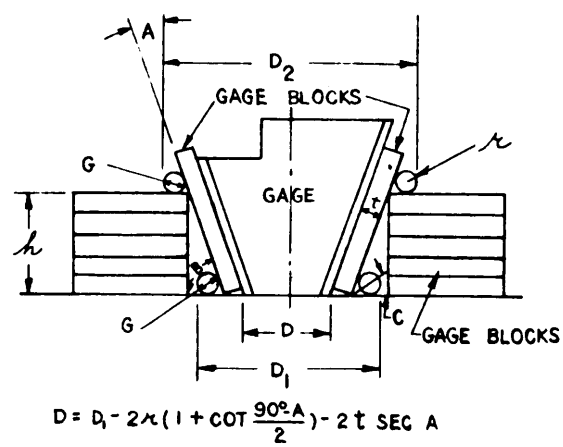

Figure 213. Measuring major diameter pipe threads by roll and gage block method.

with the ring still assembled, and an indicator is passed over the back or the steps of the check plug and the steps of the ring to see how closely they aline themselves. It is generally permissible for tapered plugs to go 0.005 inch either way beyond the limits specified for the steps on the gage drawings. In checking the pitch diameter of the tapered thread ring, it is very important to make sure that all the threads are clean. The minor diameter of tapered thread rings is checked by means of tapered check rings.

8.15 INSPECTION OF THREAD SNAP GAGES. The lead and the thread form of thread snap gages can be inspected by removing the gaging members from the frame and checking them with the same instruments used to check thread plug gages (see fig. 214).

8.15.1 The pitch diameter is adjusted or checked by passing a thread check plug between the gaging members in the assembled gage. It is common practice to set the gaging members close enough together so that the snap gage will just fall away from the check plug of its own weight when the check plug is held horizontally and the snap gage is passed over it in an inverted position. The most critical adjustment can be obtained by tightening the anvils until the gage will hang from the check plug when it is exactly vertical, but will fall off if the plug is rotated through a slight angle. (See fig. 215).

8.15.2 The gaging members should be checked for proper pitch relationship with each other by inserting the thread check plug between the gaging members of the assembled gage and sighting between the check and the members to see whether contact is being made on both flanks of each of the annular teeth on the thread rolls. If so, the gaging members are

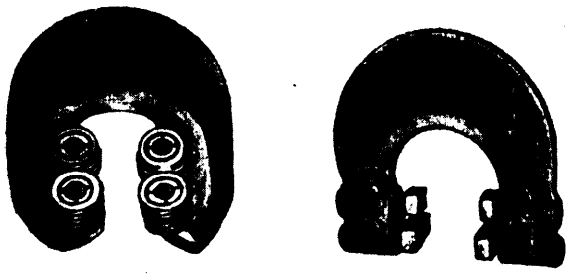

Figure 214. Thread snap gages.

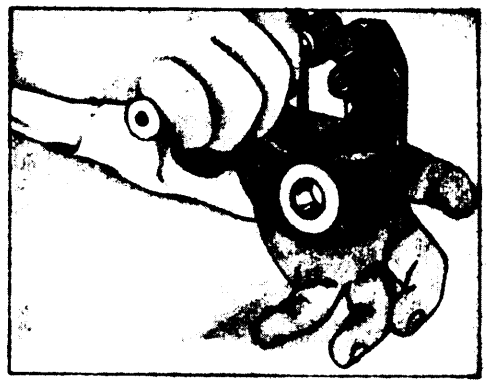

Figure 215. Setting thread snap gage.

properly alined. If the gaging members are bearing only on the thread flanks on one side, this will indicate that the gaging members are wedged against the frame of the gage and are prevented from assuming proper pitch alinement. This condition is cause for rejecting the gage because it can create considerable error in the pitch diameter when it is applied to components.

8.15.3 The check plug should be tried with only a thread or two engaged at each end of the snap gage in order to check the snap gage for parallelism.

8.15.4 Care should be taken to see that all lock nuts and screws are fully tightened. The final check of the pitch diameter adjustment should be made after all locking devices have been fully secured.

8.15.5 The minor diameter can be checked after the pitch diameter has been adjusted by passing gage blocks between the gaging members. The blocks should be tried near each end of the rolls in order to detect any possible taper. Another type of adjustable thread gage, using three tapered thread rolls, is shown on figure 110. This gage is preferred by some branches of the Armed Services for the inspection of tapered threads because it permits greater visibility. It is adjusted in the same manner as the thread roll gage described in the preceding paragraphs.

8.16 INSPECTION OF QUALIFYING THREAD GAGES. Qualified threads are

threads in which the thread form itself must be a specified axial distance from a shoulder or other part of the product. The purpose of this is to assure that the product will be in a certain angular position when it is assembled. An example of qualified threads are the threads of a rifle barrel, which must be positioned with respect to the shoulder so that the barrel will always be in an upright position when it is screwed into the gun as far as it will go.

8.16.1 Checking qualifying thread gages with a contour projector. This operation is performed by clamping the gage in the projector in a horizontal position as shown on figure 216. Any angular reference surface, such as a slot in the shoulder of the gage, must be set up in the angular position shown in the drawing. The axis of the gage must be located parallel with the line motion of the support table. This can be done by placing the image of the major diameter along the vertical line on the projection screen and adjusting the position of the gage until the thread crests just touch the line.

8.16.1.1 A ball point is then set on blocks so that the center of the ball point is exactly on the axis of the gage. The ball point is then placed between the thread flanks at the point from which the thread location is dimensioned, and brought into focus. The distance from the center of the ball point to the shoulder of the gage is measured by moving the projector support stage. (This is the dimension shown as L in figure 217.) The purpose of the ball point is merely to focus the projector at the centerline of the gage.

8.16.1.2 When the threads are not qualified with respect to some precision surface on the gage which is positioned accurately at the time the gage is clamped in the holding fixture, the length L can be used to establish the reference point. For example, when gages which check the position of the thread on the product by means of scribed lines are being inspected, the gage is rotated in the holder until the length L is the same as that given on the drawing. The gage is clamped in place, and a scriber is set

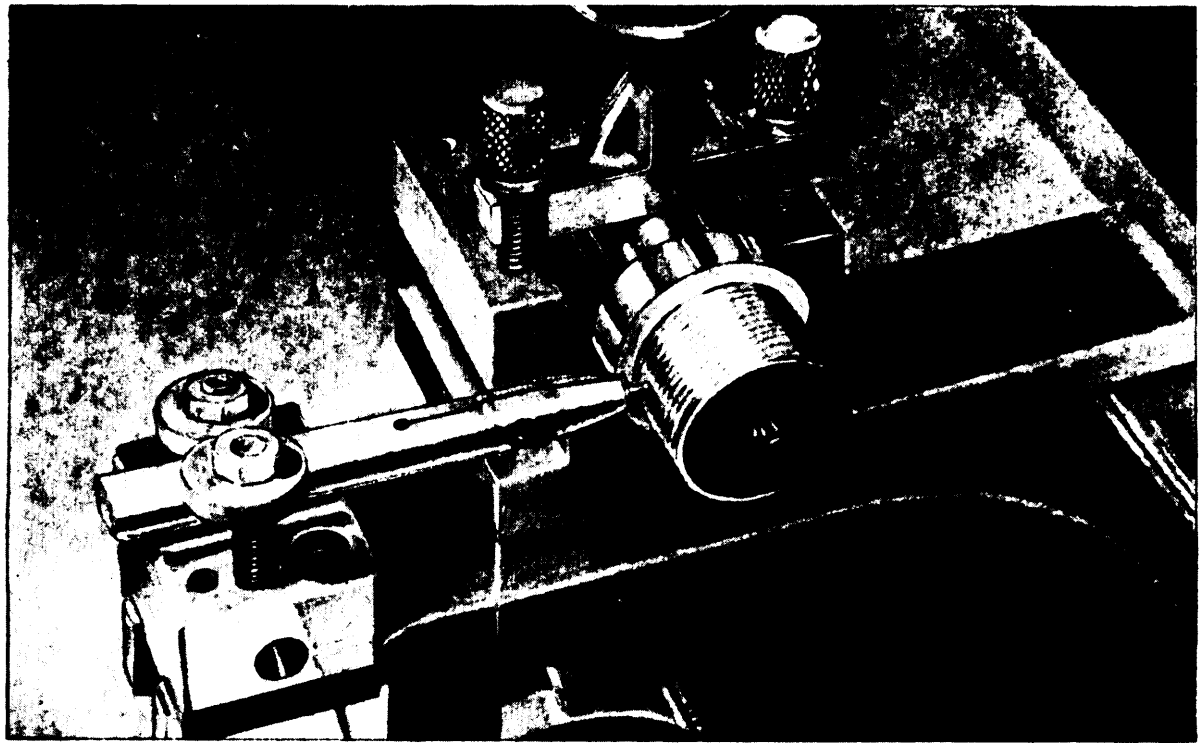

Figure 216. Set-up for checking qualified threads on a projector.

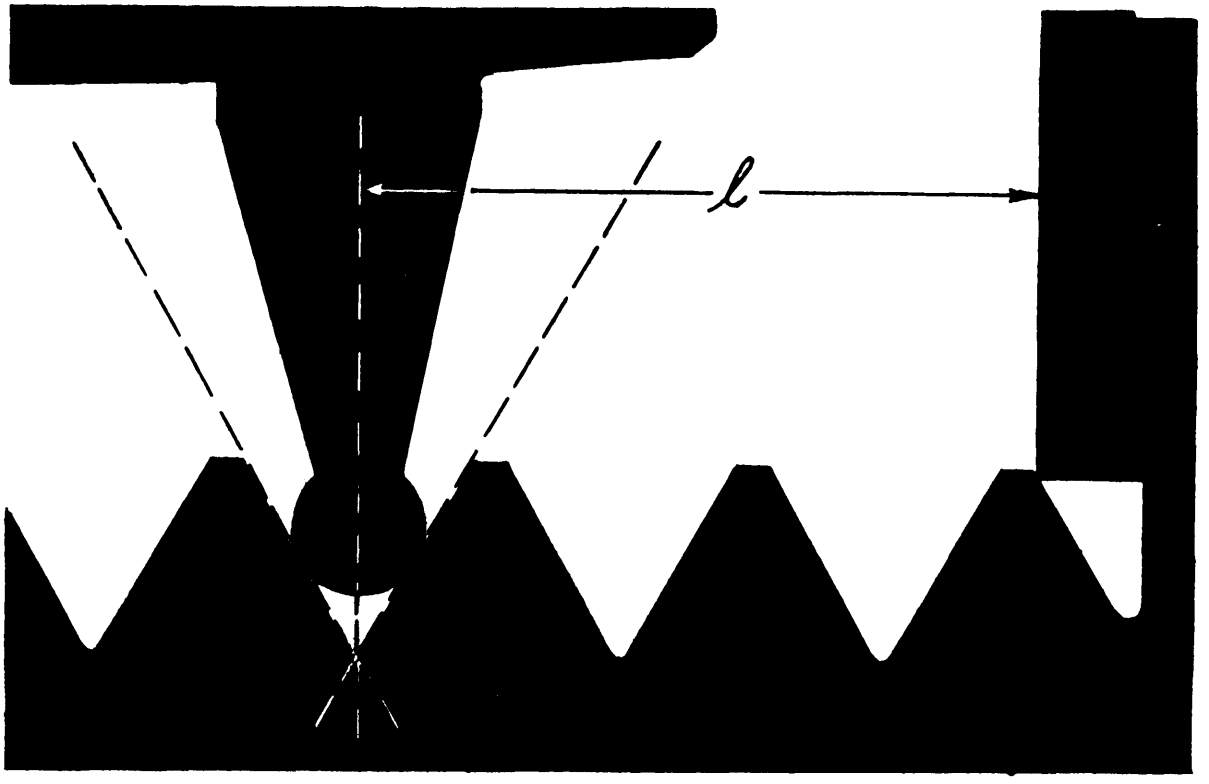

Figure 217. Measuring length to reference surface.

up on blocks the same height as the centerline of the gage. This scriber is used to check the mean scribed line on the gage or to mark the gage if it has not yet been marked.

8.16.1.3 If maximum and minimum lines are to be checked or marked, this can be done by setting up the scriber at heights such that the difference between its height and the height of the centerline equals the sine of the specified angle times the radius of the shoulder.

8.16.1.4 In general, the gaging surface or the scribed lines should be set up in the basic position and the distance to the qualified threads L will be measured if a tolerance is placed on the length of the threads on the gage drawing. The procedure specified in 8.16.1.1 is an example of this method. On the other hand, if a tolerance is placed on the gaging surf ace or scribed lines in the gage drawing, then the distance to the thread should be set up in the basic position and the location of the gaging surfaces or scribed lines should be measured. An example of this method is given in 8.16.1.2.

8.16.2 Checking qualifying threads with a thread template. The first step in checking qualifying thread gages by means of a thread template (see fig. 218) is to clamp the gage in a position which is accurately horizontal. This can be done by resting the major diameter of the gage on a flat precision surface such as a parallel or a gage block, tightening the gage in position, and then indicating over the major diameter at the top of the gage to check the parallelism. The parallelism of the pitch diameter when the gage is in this position should

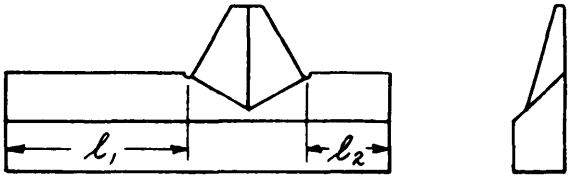

Figure 218. Thread checking template.

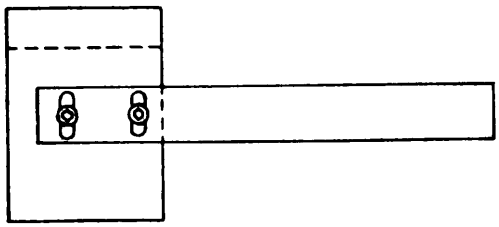

Figure 219. Special angle iron for supporting thread template.

be checked by indicating over a thread measuring wire at each end of the gage.

8.16.2.1 The thread template must be supported by a flat precision surface, parallel with the surface plate, and exactly as high as the centerline of the gage. The height of the centerline is established by subtracting one-half the major diameter from the height of the thread crests. The support for the template may be a small parallel supported by two stacks of gage blocks in the case of small gages. An angle iron with an adjustable bar attached to the face is a convenient arrangement to use for large gages (see fig. 219).

8.16.2.2 The template itself bears a single thread tooth with the distances from the intersection at the lower end of the flanks to each end of the template accurately calibrated and marked. (These are the dimensions marked L on fig. 218.) By intersection is meant the theoretical point at which the bottoms of the flanks meet the straight front surface of the template.

8.16.2.3 The template is placed on the supporting surface and the tooth is located between the thread flanks near the point from which the location of the qualified thread is dimensioned (see fig. 220). The front surface of the template should be made snug against the major diameter of the gage being inspected. The tooth of the thread template is slid against a thread flank which is on the pressure side of the gage threads. This pressure side is the side which will "fetch up" or tighten against the component threads when the gage is screwed in the product as tightly as possible. This usually is the side nearest the shoulder of the gage. Gage blocks are placed along the supporting surface between the template and the surface of the gage from which the qualified threads are dimensioned. If this surface is not on the side facing the threads, it may be necessary to place an angle iron or a parallel against the surface in question to contact the gage blocks. A precision square should be used to make certain that this piece is perpendicular to the crests of the threads. If the combination of gage blocks selected is too small, a slight amount of light will be seen between the edge of the thread template and the flank of the thread on the gage. If the stack of gage blocks being used is too long, they will not fit between the template and the reference surface. When a combination which appears to be a good fit has been found, stacks of blocks 0.0001 inch longer and a 0.0001 inch smaller should be tried to make sure that the fit cannot be improved. It will be easier to make this check if a piece of white paper is placed under the threads.

8.16.2.4 In the case of large gages and gages with steep helix angles, where the lead and the angle cannot easily be checked by the usual methods, the thread template is used.

8.16.2.5 Angle is checked by sighting between the flanks of the template and the gage with a jeweler's glass. If any light passes between the two, the degree of error can be determined by trying different thread templates representing the maximum and minimum limits of the angular tolerance.

8.16.2.6 Lead is checked by subtracting or adding multiples of the theoretical lead to the dimension used to qualify the threads, placing the thread tooth of the template between the appropriate threads, and rechecking the dis-

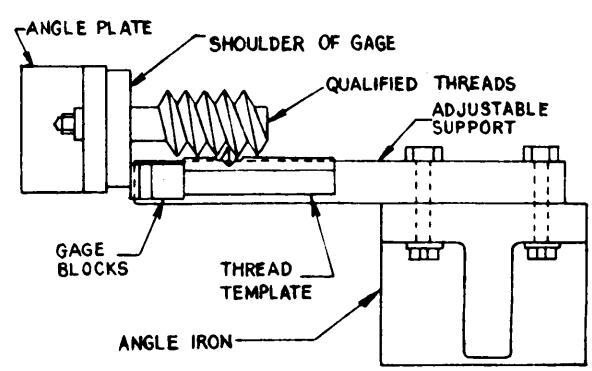

Figure 220. Set-up for checking qualifying thread gage (top view).

tance to the reference surface. In the case of plug gages, the thread tooth with the shortest lead is used as a basis for computing the observed value of the thread qualifying dimension. This is because the thread tooth with the greatest minus lead error will determine the position of the gage in the product.

8.16.2.7 In checking qualifying thread gages, it is important to remember that taper in the pitch diameter affects the location of the gage in the component. The part of the gage with the largest pitch diameter will wear rapidly, and will cause the gage to function differently as it wears. For this reason, the permissible taper in the pitch diameter of a new gage should be considerably less than the pitch diameter tolerance.

8.17 INSPECTION OF SEGMENTAL THREAD GAGES. Segmental thread gages are gages which have the ordinary type of thread form but which have gaging surfaces which constitute an arc rather than the complete circumference of a circle. In short, segmental thread gages constitute a portion of the full cross section of the ordinary thread plug or ring gage. The purposes of this type of construction are to permit the gage to open and close as in the instance of certain types of snap and indicator gages, or to make the gage lighter and easier to handle as in the instance of very large thread gages for artillery.

8.17.1 The particular difficulty in inspecting segmental thread gages is that the form of the gage makes it impossible to take measurements directly across the diameters. Generally, the major diameter is computed by means similar to those used for measuring external radii on profile gages, and the pitch diameter is computed by finding its position with respect to the major diameter.

8.17.2 One of the most common ways of determining the major diameter, for example, is to place the thread crests against a flat precision surface and to take a measurement over two rolls as shown on figure 221. On this figure, M equals the major diameter, m equals the distance between the outer surfaces of the rolls, and G equals the diameter of the precision rolls. In the case of small segments, the gage can be

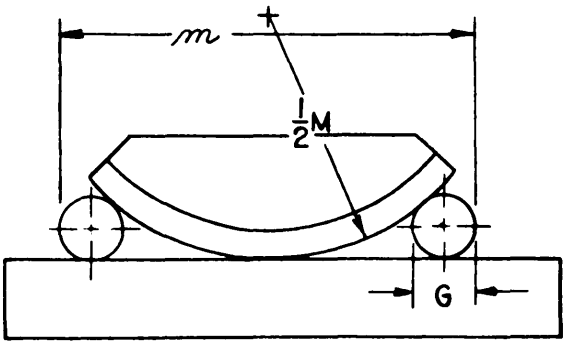

$$M = \frac{(m-G)^2}{4G}$$

Figure 221. Measuring major diameter of segmental thread gage.

placed face downward on a tool maker's flat and the measurement over the rolls can be made with a bench micrometer. In the case of large gages, particularly where it is necessary to clamp the gage upright for checking qualified threads, the gage is clamped in an upright position with the axis horizontal, and the face of an angle iron then is pressed against the thread crests of the gage. The position of the upper roll is determined by means of a height gage, while the position of the lower roll is determined by building a stack of gage blocks beneath it until it is wedged snugly between the crests of the gage and the face of the angle plate.

8.17.3 The pitch diameter can be found by placing the gage flat with the threads uppermost. A thread measuring wire suitable for the pitch in question is placed between the thread flanks, and the difference between the top of the wire and the crests of the thread is measured with a height gage. The difference multiplied by two and added to the major diameter as previously determined, gives the effective measurement over the wires. The pitch diameter then is found by subtracting the same constant which would be used in determining the pitch diameter by the ordinary three-wire method. This check should be made at three or more points along the length of the gage.

8.17.4 The form of segmental threads can be checked by placing the gage in a contour projector or a tool maker's microscope. The position of the gage should be adjusted so that

the images of the thread crests fall along the horizontal line of the projection screen. The gage is then twisted until the thread flanks form the sharpest and narrowest outline obtainable, and the thread form is inspected in the same way used to check the form of an ordinary plug which has been turned through the helix angle.

8.17.5 If the lead is measured by optical means it should be remembered that the readings taken must be multiplied by the secant of the helix angle unless the supporting stage and the lateral micrometer have been turned through the helix angle.

8.17.6 In the case of large segmental thread gages, thread form can be checked most easily and accurately by means of an appropriate thread template.

8.18 INSPECTION OF ACME THREAD GAGES. Specifications for Acme threads are given in Handbook H28, Screw Thread Standards for Federal Services.

8.18.1 Ordinarily, Acme thread gages can be inspected by the same methods used to inspect thread gages for American National threads. The one point of difference is that the minor diameter of Acme threads must be measured. This is done by measuring the distance between the thread crests and thread roots, multiplying by two, and subtracting this amount from the measured value of the Major diameter. The distance between the crests and roots generally can be found by means of the ordinary depth micrometer. In questionable cases and in cases where there are close tolerances on the minor diameter this distance can be found by placing the gage horizontal and taking measurements with an indicator height gage and gage blocks.

8.18.2 The distance between the major and the minor diameters should be measured at more than one point about the circumference of the gage in order to make certain that these diameters are concentric.

8.18.3 When Acme thread measuring wires are not available for determining the pitch diameter, ordinary thread measuring wires or precision rolls which will rest somewhere near the center of the Acme thread flanks can be used instead. The distance from the tops of the wires or rolls to the pitch line can be determined from the equations specified in 8.11.6.3. In this case G will represent the diameters of the wires or rolls, and a, the half angle of the threads, will be 14 degrees, 30 minutes.

8.18.4 When suitable thread measuring wires are not available. or when it is desired to measure the pitch diameter of a multiple start "Not Go" thread plug gage where one or more thread starts have been removed, making it impossible to measure pitch diameter with wires, the pitch diameter can be measured with a tool maker's microscope or with a contour projector. This is done as follows:

8.18.4.1 Measure the major diameter. Place the plug in the projector and rotate the stage through the helix angle.

8.18.4.2 Aline the thread crests with the horizontal line on the screen and then raise the image of the threads until the horizontal line coincides approximately with the pitch line, noting the exact amount which the plug was raised in doing this.

8.18.4.3 Measure the thickness of the thread tooth between the points on the flanks intercepted by the horizontal line. Multiply this value by the secant of the helix angle.

8.18.4.4 Compute the difference between this width and the value of p/2 for the pitch of thread in question. (Remember that in the case of multiple start threads p equals the lead divided by the number of thread starts.)

8.18.4.5 Divide this difference by two and multiply by the cotangent of the half angle of the thread.

8.18.4.6 If the thickness of the thread tooth at the point where it was measured was greater than p/2, subtract the figure obtained in 8.18.4.5 from the amount which the plug was raised as specified in 8.18.4.2. If the width of the tooth was less than p/2, add this figure to the amount the plug was raised.

8.18.4.7 Multiply the figure obtained in 8.18.4.6 by two and subtract it from the value of the major diameter. This will give the pitch diameter.

8.18.5 This measurement should be taken at least two different points about the circumference of the plug to make sure that the major diameter and the thread flanks are concentric.

8.19 INSPECTION OF MODIFIED SQUARE THREAD GAGES. The major

diameter of these threads is checked with micrometers or with a bench micrometer, depending on the tolerance. If the lead is so great that the anvils of the measuring instrument will not contact the major diameter at both sides of the plug at once, gage blocks can be placed on the thread crests and the measurement can be taken over them.

8.19.1 The minor diameter can remeasured with a micrometer depth gage or by setting the plug up in an accurately horizontal position and measuring the distance between the thread roots on the top side and on the bottom side with an indicator height gage. It should be noted whether the minor diameter is concentric with the major diameter within the diametral tolerances specified.

8.19.2 The great degree of helical interference encountered in modified square threads usually makes it impractical to check them by means of a projector. For this reason, the thread form and the width of the thread fillets generally are checked by means of a thread template. The set up for doing it is specified in 8.16.2.5. If the modified square threads being inspected are not qualified, the face of an angle iron placed in a position perpendicular to the surface supporting the thread template can be used as a base for positioning the gage blocks.

8.19.3 To measure the width of the threads, the thread template is placed against the flank of a thread tooth on the gage and a stack of gage blocks is fitted between the template and the angle iron. The tapered template then is positioned against the thread flank on the other side of the same thread tooth on the gage and the distance between the template and the angle iron again is measured with gage blocks. The difference in the lengths of the gage block stacks, minus the width of the thread tooth on the template, will give the width of the thread tooth of the gage.

8.19.4 The thread angle of the gage is checked by using thread templates made to the maximum and minimum permissible angles. As in the case of Acme threads, this inspection can be made more accurately by placing a piece of white paper under the set-up and using a jeweler's glass.

8.20 INSPECTION OF FLUSH PIN GAGES

8.20.1 General. The general operational check is especially important in the case of flush pin gages. The following steps should be taken:

a. Make sure that all pins move freely, but without shake or side play. Pins should be free to move at least $\frac{1}{64}$ inch further than the limits shown on the drawing, when tolerances are close. When tolerances are large, leeway of $\frac{1}{16}$ inch or greater is preferred.

b. The corner of the pin at the step end and the corners of the feeler edges should be sharp. Any burr should be removed by stoning exactly parallel to the surface with a hard Arkansas stone.

c. If the component drawing is available, check dimensions such as diameter of pin, amount of chamfer, and size of radius for interference with the component. Also note whether there are any obstructions to prevent the gage body from resting on the proper portion of the component.

d. When the length of the pin is checked be sure to indicate over the top of the pin and the steps for parallelism.

e. Where the pin is free to rotate, an indicator anvil should be placed near the top edge of the pin and the pin rotated to check the squareness of the top surfaces with the pin and the body.

f. If the flush pin is removed from the body of the gage for any reason, they should be marked so that they can be reassembled in the same relative position. (This does not apply to a lock pin which engages the flush pin at the side rather than in a slot through the center of the flush pin.)

g. Before disassembling the gage, note whether the lock pin holding the flush pin in position is tapered. If so, drive it out in the proper direction.

h. A chamfer is frequently specified at the contact end of the flush pins. These chamfers can be inspected on a contour projector.

8.20.2 Depth measuring flush pin gage. This gage is checked with two equal stacks of gage blocks as shown on figure 222. Starting with block combinations which would bring the

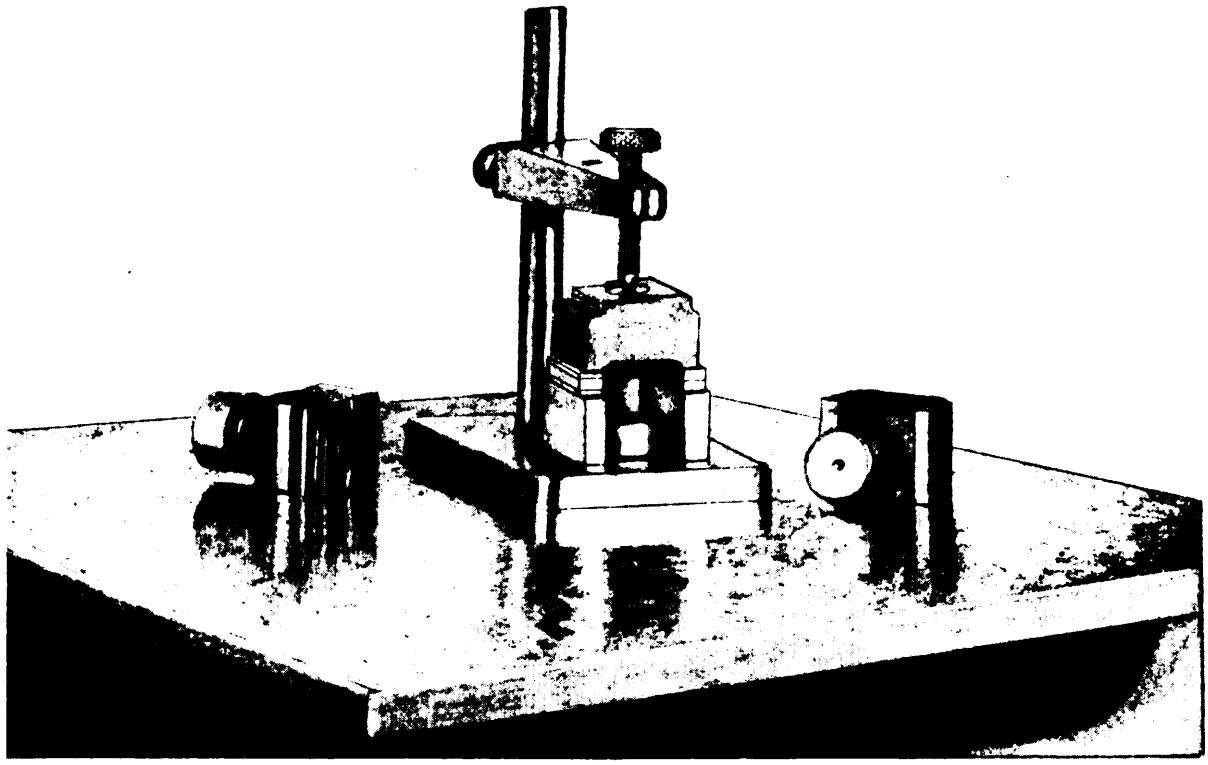

Figure 222. Set-up for checking depth measuring flush pin gage.

pin flush with one of the steps if no error existed; other combinations of gage blocks are tried until a flush condition is reached. The flush condition is determined by running an indicator over the top of the pin and the step. The height of the gage blocks required to make the pin flush is the required dimension, The other gaging dimension is found by repeating the process at the other step.

8.20.3 Length measuring flush pin gages. This type may be measured accurately with a pin of the same diameter as the flush pin (or slightly smaller), which has square ends and an accurately known length. The pin should be long enough to project from the gage when it is placed in the bore from the lower side and pushed snugly against the flush pin. After insertion of this pin, the gage is checked with two equal stacks of gage blocks using the same methods as for depth measuring flush pin gages (see figs. 223 and 224).

8.20.3.1 If pins of the type described in the preceding paragraphs are not available, the inspection can be made with a depth micrometer. The micrometer is clamped upside down near the top of an angle iron and its position adjusted until the anvil is horizontal (see fig. 225). Then the flush pin gage is placed on the anvil of the micrometer and the micrometer spindle advanced until the pin is flush with the steps as shown by indicating. If the gage maker's tolerances are large, the reading of the micrometer will give the dimension to sufficient

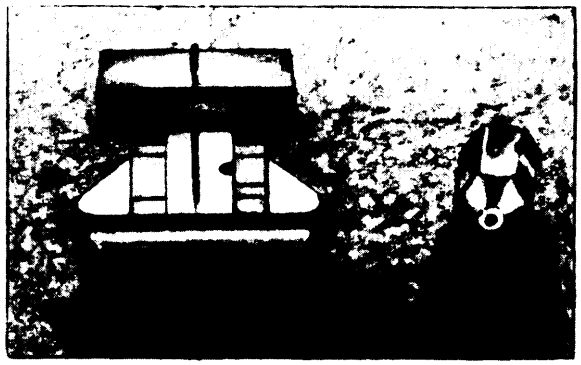

Figure 223. Set-up for checking length measuring flush pin gage—pin method.

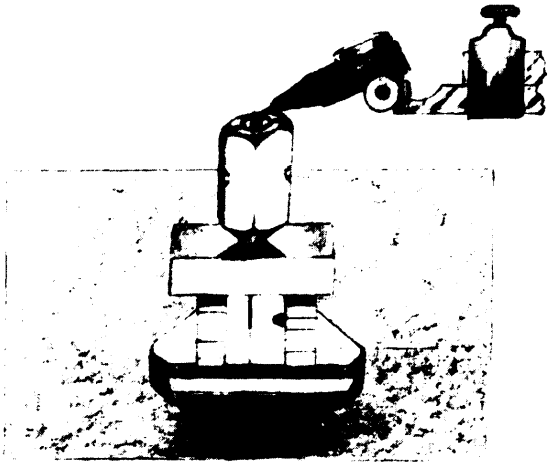

Figure 224. Checking length measuring flush pin gage—pin method.

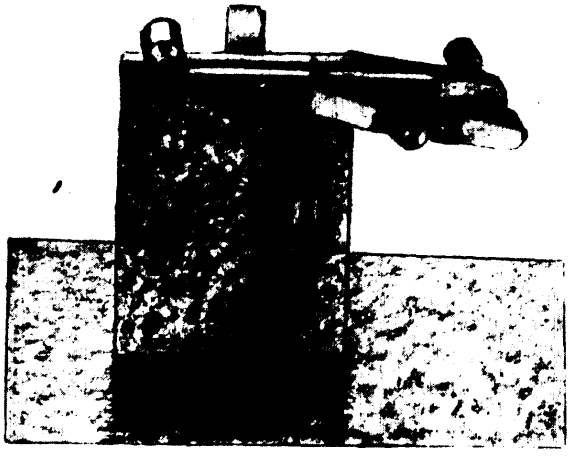

Figure 225. Set-up for checking length measuring flush pin gage—micrometer method.

accuracy. If the gage maker's tolerances are close, lock the depth micrometer in position, remove the flush pin gage and measure the difference in the heights of the micrometer spindle and the anvil by means of an indicator height gage and gage blocks (see fig. 226).

8.20.3.2 This type of gage may be measured accurately by removing pin and measuring its length as well as the distance between the base and the steps of the body in a bench micrometer. The length from the base to the minimum step, minus the length of the pin equals the minimum gaging dimension; and the distance from the base to the maximum step, minus the length of the pin equals the maximum gaging dimension. When this method is used the ends of the flush pin must be perpendicular to the axis.

8.20.4 Post type flush pin gages. This type of gage is inspected by trying gage block combinations between the anvils and noting the lengths of blocks required to bring the top of the flush pin level with the maximum and the minimum steps (see fig. 227). As before, the lengths of the gage blocks indicate the gaging dimensions.

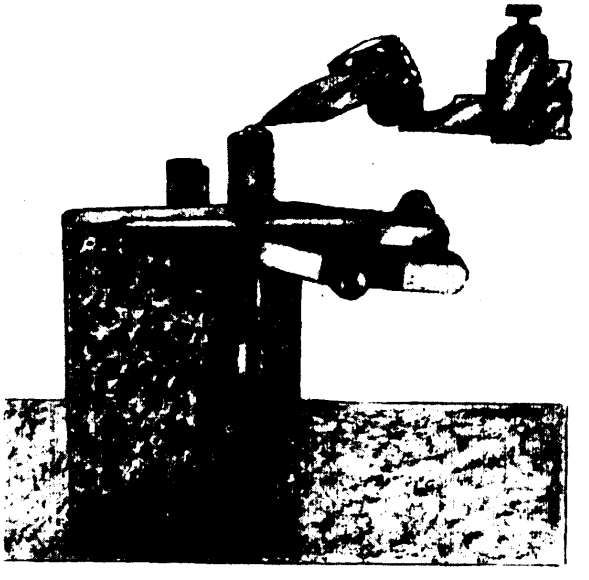

Figure 226. Checking length measuring flush pin gage—micrometer method.

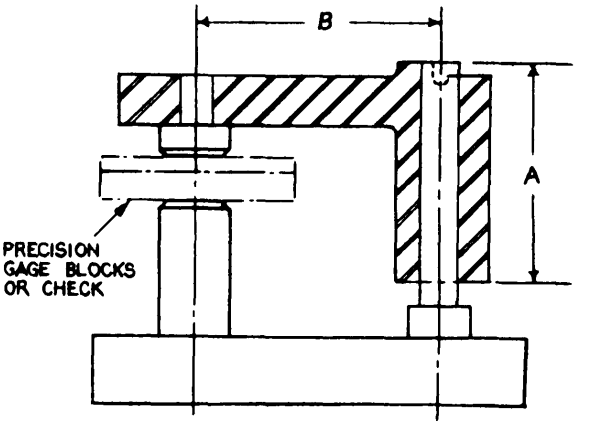

Figure 227. Post type flush pin gage.

8.20.4.1 There are several additional checks which must be made on gages of this type. The following are the most important:

a. Check the anvils for parallelism by placing the gage blocks near each edge in turn and noting changes in position of the pin.

b. Check the surfaces of the anvils for squareness to the axis of the flush pin. This can be done by swinging the movable arm to and fro over the gage blocks.

c. Be sure that the stationary anvil fits the base of the gage securely. In particular, there should be no space between the shoulder of the stationary anvil and the base.

d. Be sure the top edges on the stationary anvil are rounded unless there is a functional reason for not doing so.

8.20.4.2 A very common design error on this type of gage is to make the length of engagement of the flush pin too short. The length of the flush pin in the bushing should preferably be as great as the distance from the flush pin to the anvil on the arm. (In fig. 227, dimension A should be as great as dimension B.) If the length of engagement is not adequate call the designer's attention to this fact.

8.20.5 Flush pin gages for location of holes. When gages of this type have a moving pin with more than one diameter, the pin should be rotated in position with an indicator in contact with each of the diameters except the one which fits the body of the gage to check the diameters of the pin for concentricity.

8.20.5.1 Moving pins having a tapered section must be removed and placed in a "V" block to check concentricity. If a plate is clamped on the "V" block so as to close one end of the "V" and a ball with about the same diameter as the pin is placed in the "V" at this end, the pin can be rotated without incurring axial movement if it is pressed firmly against the ball. An indicator in contact with the tapered section then will register only the variations due to eccentricity of the tapered section.

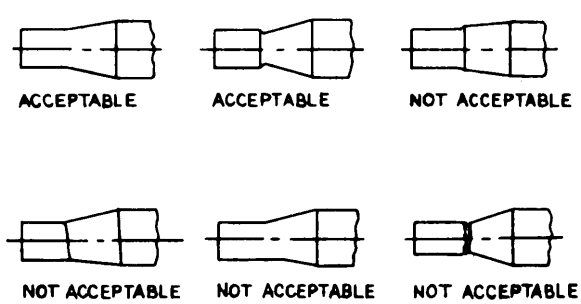

Figure 228. Conditions commonly found on tapered pins.

8.20.5.2 It is especially important that there be no shake in flush pins of this type.

8.20.5.3 If the tapered section of a pin is used for locating purposes a contour projector must be used to check the condition at the intersection of the taper and the straight pilot surface. The following are particularly important requirements:

a. The intersection must be free of all sharp edges and abrupt changes in contour which might prevent the pin from locating properly.

b. The intersection must be concentric with the rest of the pin.

c. The finish must be good.

8.20.5.4 A radius is permitted, provided it is symmetrical and even. Common acceptable and unacceptable conditions of this portion of the gage are shown on figure 228.

8.20.5.5 From the above requirements, it will be noted that the pin must be rotated through at least half a turn in the projector.

8.20.5.6 The next step for all types of location flush pin gages is the measurement of the diameter of the flush pin at the section which enters the component. In particular, it should be noted whether there are any flats about the circumference of the pin.

8.20.5.7 The gaging dimensions are measured by placing a wedge or an adjustable support under the gaging pin to bring the top of the flush pin exactly level with one of the steps as shown by indicating. An indicator height gage and gage blocks then are used to measure the distance from the centerline of the pinto the surface used to support the component (see fig. 229). This distance is one of the gaging dimensions of the gage. If the support for the gaging pin is not extremely secure, it is wise to indicate over the top of the flush pin and the step after finding the gaging dimensions to be sure they are still flush. This process is repeated with the flush pin level with the other step to find the other gaging dimensions.

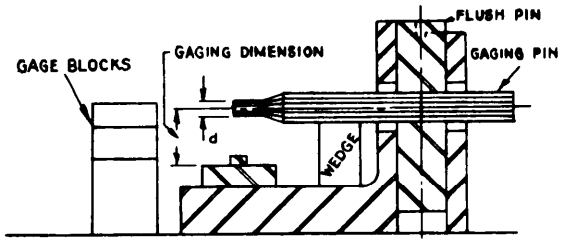

Figure 229. Flush pin for measuring location of bolos.

8.20.5.8 Both ends of the gaging pin should be checked for parallelism with the surface which supports the work.

8.20.5.9 Where it is possible to place gage blocks directly on a gaging surface which supports the component, the procedure . can be shortened considerably by so placing the blocks and bringing the gaging pin down on the blocks until a combination is found for which the flush pin is level with one of the steps. The height of the blocks, plus one-half of the measured diameter of the pilot of the gaging pin is the required dimension.

8.20.6 Tapered flush pin gages. For inspection purposes these gages generally are divided into two classes: those in which the flush pin has a slight taper and close tolerances, and those in which the angle is large and tolerances are not very close.

8.20.6.1 The first type is inspected by removing the pin, standing it upright in a hold-down fixture, and measuring the diameter and the taper of the tapered section over rolls by exactly the same methods used for measuring plain tapered plug gages. The length from the apex or from a datum diameter to the flat end of the pin should be determined.

8.20.6.2 The length from the base of the body to the maximum and minimum steps then is measured with a bench micrometer. These distances, subtracted from the distance from the datum or apex to the flat end of the pin, will give the maximum and the minimum depths to the datum or apex as specified on the component and gage drawings.

8.20.6.3 The purpose in taking measurements over the rolls when the taper of the flush pin is slight is that slight variations in the taper or in the diameter of the tapered section will have a large effect on the positioning of the flush pin in the component. In the case of steep tapers, these factors will not have so much effect on the positioning of the flush pin.

8.20.6.4 When the angle at the bottom of the flush pin is large and when the tolerances are not close, the angle can be checked by means of a contour projector or a sine bar.

8.20.6.5 The dimension for this type of gage can be measured by means of a channel-bar fixture (see fig. 230). Two precision rolls are placed on the channel-bar base and the channel-bars brought together and locked in position with the rolls between them so as to hold the rolls rigidly in position. When the diameter of the tapered surface of the flush pin is large, it may be necessary to space the rolls a fixed distance apart by placing a gage block between them. The tapered surface should contact the rolls at about the center of its length, or in the section where the pin will bear on the component if it does not make contact over the full length of the tapered section.

8.20.6.6 Two equal stacks of gage blocks are placed on the channel-bars and the gage placed on top of them. The gage must be centered so that both sides of the flush pin touch the rolls. Various combinations of gage blocks are tried until the top of the flush pin is flush with one of the steps. This is repeated for the other step.

8.20.6.7 The computations necessary to determine the distance from the bottom of the gage to the apex of the pin are explained in figure 231. In this figure, the following symbols are used:

D = the distance from the apex to the body
W= the height of the channel bars
Z = the height of the gage blocks
V = the width of the block separating rolls
A = the half angle of the taper of the flush pin
r = the radius of the rolls

8.20.7 Goose neck flush pin gages. The dimensions of this gage are checked by the method generally used for other types of flush pin gages; namely, gage blocks are tried between the anvils until the combinations which will make the flush pin flush with each of the gaging steps are found.

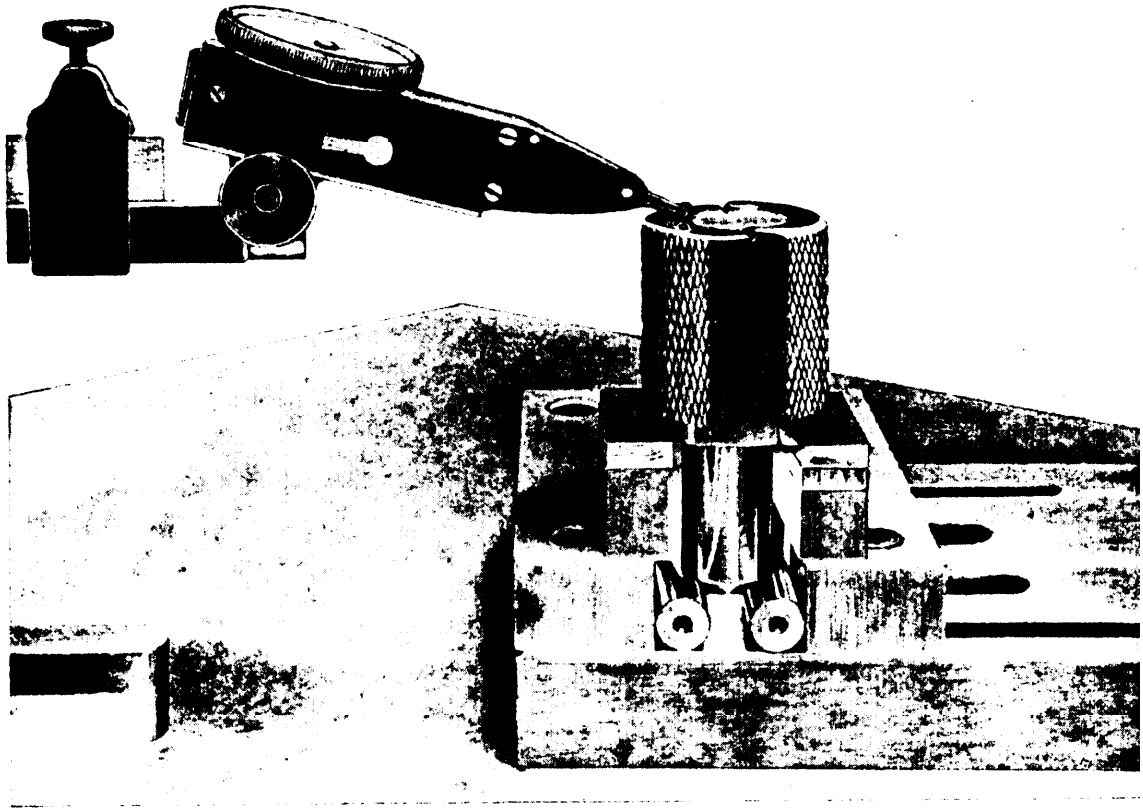

Figure 230. Set-up for checking small conical flush pin gage.

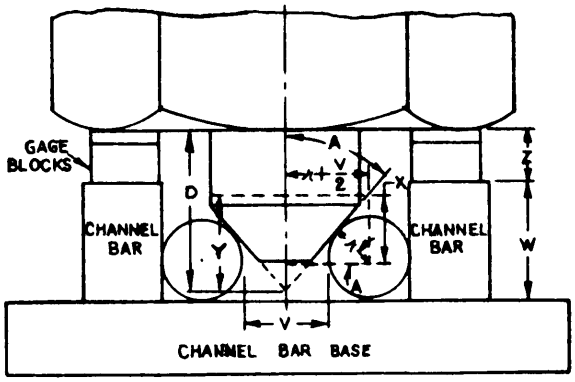

GIVEN: - V, W, Z, r, $\angle A$

$X = r \text{ COSEC } A$; $Y = (r + \frac{V}{2}) \text{ COT } A$

$W + Z = D - Y + X + r$

$D = W + Z + Y - X - r$

$D = W + Z + (r + \frac{V}{2}) \text{ COT } A - r \text{ COSEC } A - r$

Figure 231. Computing length to apex on tapered flush pin gage.

8.20.7.1 The set-up should simulate as nearly as possible the conditions under which the gage will be used. For example, surfaces which bear on a component in use should be located on precision reference surfaces for the measurements.

8.20.7.2 Sometimes one surf ace of a goose neck flush pin gage rests on the component during inspection. On such a gage this surface should have a finely ground finish that is properly positioned with respect to both the flush pin and the anvils.

8.20.7.3 When a fairly close check of the centerlines of the anvils is desired or when it is necessary to establish the distance from the centerline of an anvil to some other portion of the gage, the measurement generally can best be made by means of a contour projector.

8.21 INSPECTION OF PROFILE GAGES

8.21.1 Template gages for profile of radius.

8.21.1.1 Checking radii where great accuracy is not required. A template or profile gage having a radius with a fairly large tolerance (0.005 inch or greater) can be easily checked by means of a contour projector. Projection screens are available having a series of radii engraved on the glass. The image of the radius on the gage is matched with a radius on the screen and the value of the screw radius noted. If a projection screen of this type is not available, or if the radius being inspected is larger than those given on the screen, it is possible to make a drawing of the radius in question at the appropriate magnification (see 8.5.5). A tool maker's microscope can also be used for direct measurement of a radius. The accuracy to which it can be used varies with the length of arc. In general, this method can be used when the tolerance on the radius is 0.001 inch or greater. The geometry of a measurement of radius by direct measurement with a projector is given in figure 232. The horizontal line on the projector screen (the line AB in the diagram) is placed so as to intercept the arc at any desired height. When the measurement is at only one point, this line should be placed so that the points A and B are near the ends of the arc. Measure the distance D between the points A and B. Move the support table until the horizontal line on the screen is tangent to the bottom of the curve, noting the displacement. This is the distance H. The radius then can be found by substituting the values for D and H in the formula shown on figure 232.

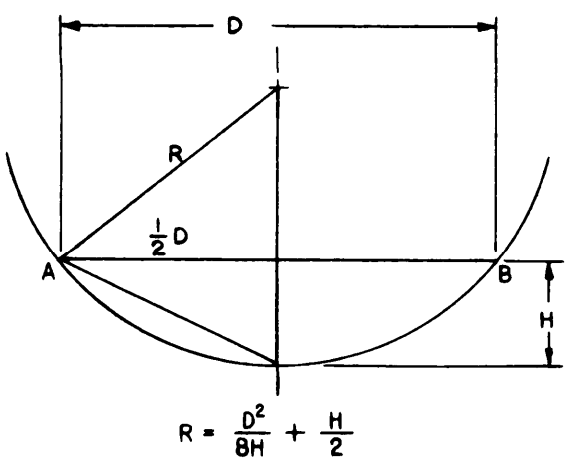

Figure 232. Measuring radius with projector.

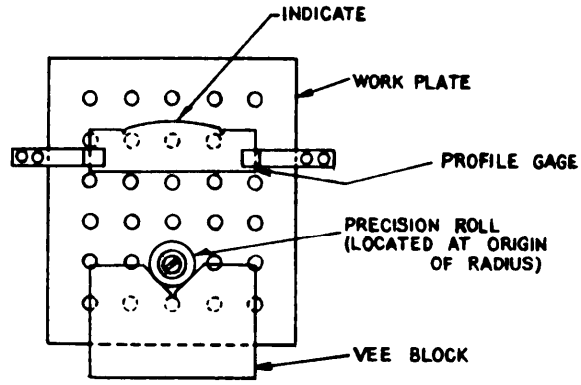

Figure 233. Set-up for checking radius with indicator.

8.21.1.2 Checking radii where accuracy is required. When the tolerance on the radius is close, a convenient and accurate method is to clamp the profile gage to the rotating face plate of precision bench centers, the face plate of a precision indexing head, or an indexing plate. The contact point of an indicator is brought in contact with the radial surface of the gage and the face plate rotated over the length of the arc on the gage. The position of the gage is adjusted until the indicator shows a minimum of variation when the face plate is rotated. When the minimum variation of the indicator has been obtained the gage is located so that the origin of the radius coincides with the center of the face plate. The distance from the radius of the gage to the origin (center of face plate) then can be measured by using gage blocks and rolls or gage blocks and an indicator height gage. The location of the origin with respect to straight precision surfaces on the gage can be checked by rotating the face plate until the surface in question is horizontal when indicated, and then checking the distance from the surface to the center of the face plate by means of an indicator height gage and gage blocks. The uniformity of the radius can be checked by noting the variations in the indicator readings. These variations must not exceed the tolerance on the radius as specified in the gage drawing. If there is no tolerance specified on the radius, the uniformity of the radius must be held as closely as the tolerance

on the position of the origin. Another set-up for this measurement is shown on figure 233. This method takes longer than the one specified in 8.21.1.2, and it is generally used only when an indexing plate is not available.

In this arrangement, a tool maker's button is attached to the work plate and the profile gage is clamped in a position such that the distance from the center of the button to the arc on the template gage is equal to the basic radius specified on the gage drawing. Adjust the position of the profile gage on the work plate until there is no variation in the indicator readings when the work plate is rotated. The actual radius of the gage then can be determined by measuring the distance from the radius on the gage to the center of the button by means of an indicator height gage. If uniform indicator readings cannot be obtained when the gage is rotated, the radius of the gage is not uniform. In such cases, the position of the gage on the plate is adjusted to give a minimum variation in indicator reading. The distances of any close tolerance surfaces from the origin of the radius can be found by measuring the distances from these surfaces to the center of the tool maker's button with an indicator height gage. In cases where the equipment described above is not available, or where the radius is so large that the methods are not practical, a tool maker's button can sometimes be located at the origin on a large horizontal plate, and a stack of gage blocks and a roll, whose total length plus the radius of the fixed button equals the nominal radius of the gage, is placed between the gage and the fixed roll as shown on figure 234. The blocks and the movable roll are turned through the entire angle subtended by the radius. If the blocks and roll are a snug fit over the entire surface of the radius, the radius is satisfactory. If they are not an exact fit, the error in the radius can be determined by trying different, combinations of gage blocks. Errors in the origin can be determined by moving the fixed button to new positions.

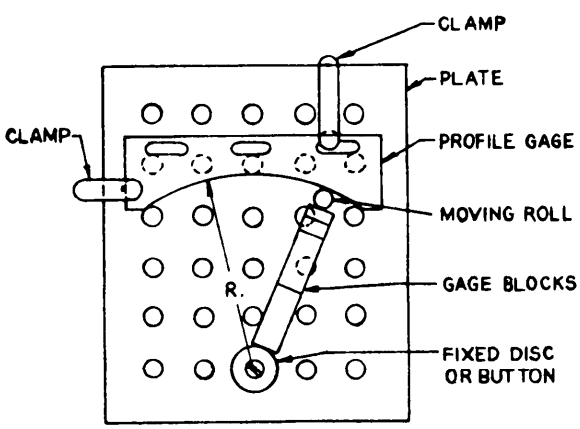

Figure 234. Checking radius with fixed button and gage blocks.

8.21.1.3 Checking radii with gage blocks, tool maker's buttons, and parallels. This method is generally used when great accuracy and dependability of measurement are required, or when the radius being measured is so large that it cannot be measured by the methods described in previous paragraphs. Template gages should be examined for any indication of warping before they are clamped in position for measurement. They should be clamped so as to be free of stress. It is generally sufficient to check radii at three different points along the arc. In order to be sure that the entire gaging surface of the gage is uniform, it should be checked with an indicator placed between two buttons mounted on a plate as shown on figure 235. The variations in indicator readings should be considerably less than the tolerance on the radius. This is known as the check for uniformity of radius. The following symbols are used in the formulae given in the ensuing pages:

R= Radius being measured
r = radius of precision roll or button
G=diameter of precision roll or button
M= measurement taken over the rolls

Other symbols are distances as shown on figures. The formulae used in checking profile gages can be either of two types: those involving trigonometric functions and those which involve only algebraic terms. Generally, the trigonometric formulae require less time to solve than the algebraic. However, both types of equation are given for most of the gages discussed in the ensuing pages for the benefit of those who are not thoroughly familiar with trigonometry. The use of the equations involving trigono-

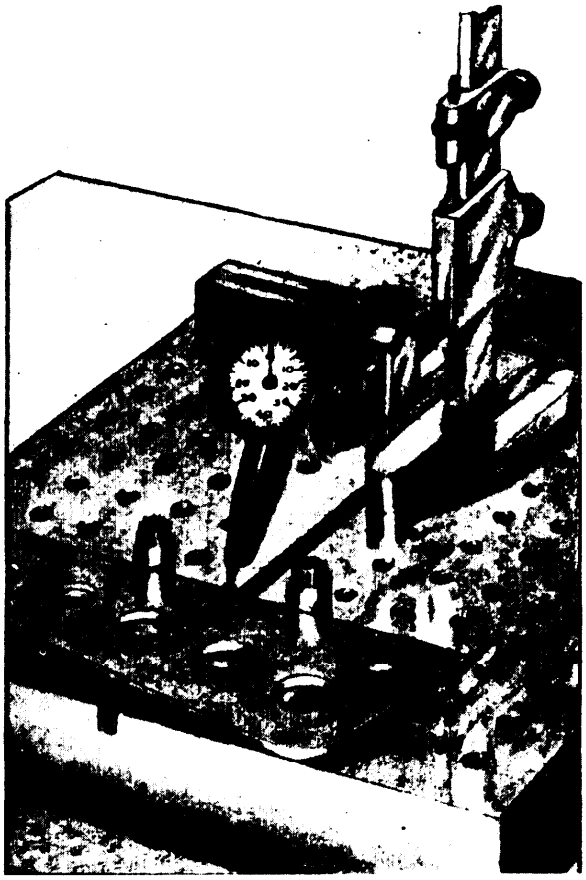

Figure 235. Checking uniformity of radius.

metric terms usually requires finding the sine of the angle subtended by the rolls and using standards tables to find the cosine of this angle for use in computing the dimension desired. To obtain the accuracy generally required for profile gages, seven place tables, giving the values of the functions of the angles for each 10 seconds of arc, or eight place tables, giving the values of natural sines and cosines for each 1 second of arc, should be used. If such tables are not available, the relationships Cos A= $\sqrt{1-\text{Sin}^2 A}$ and tan A= $\sqrt{\sec^2 A}-1$ can be used. A practical book to use is "Natural Sines and Cosines to Eight Decimal Places," Special Publication No. 231, prepared by the Coast and Geodetic Survey, available from the Superintendent of Documents, Washington, D. C. The term S given in many of the equations is not a dimension which can be shown on the drawing, but merely an algebraic quantity. S represents several terms in the equation which always remain the same, once any given gage has been clamped in position. The advantage in using this term is that after it has once been computed it can be used in all solutions of equations involving various positions of the button. This will save the time required to compute the terms comprising S each time a new position for the button is selected. The methods used to derive the algebraic formulae are shown on figures 239, 240 and 241. The methods used to derive the trigonometric formulae are shown on figures 257,258,259, and 260.

8.21.1.3.1 Checking an inside radius with no precision reference surface. This is done by clamping a parallel to a surface plate and placing two buttons on one side of the parallel, spaced apart by a stack of gage blocks long enough to place the buttons near the ends of the radius being checked. The length of the gage blocks equals dimension 21 shown on figure 236. The sides of the gage blocks should not touch the sides of the parallel. The profile gage is placed against the buttons and the posit-ion of the buttons and the blocks adjusted until they are a snug fit. Then the gage is clamped into position. One of the buttons then is placed at the center of the radius and the dimension h is determined by finding the combination of gage blocks which fits snugly between the roll and the parallel. The roll should be pushed to

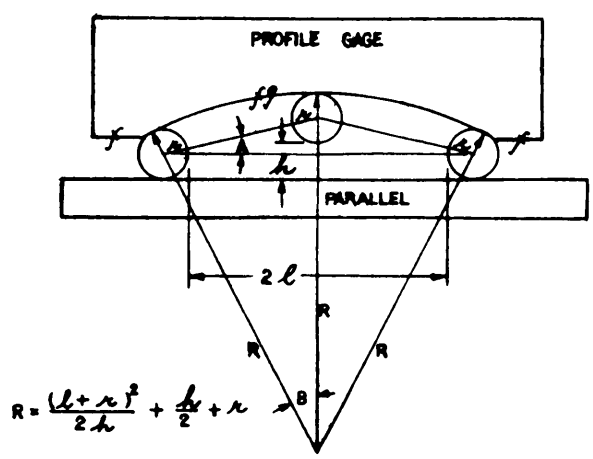

Figure 236. Checking inside radius (with no precision reference surface).

and fro during this operation to be sure that it settles at the point farthest from the parallel. Knowing the dimension, h, the radius can be determined by solving the formula shown on figure 236.

8.21.1.3.2 Checking an inside radius where the radius is tangent to a straight surface. The steps in this operation are as follows:

a. Clamp a parallel to a surface plate and use a stack of gage blocks of any convenient length H, to locate the gage in a position such that the straight surface is parallel to the parallel bar.

b. The length n shown on figure 237 is the distance from the edge of the button to the point where the radius and the straight section of the gage are tangent. If this point of tangency is dimensioned accurately with respect to some other precision surface on the gage, use this precision surface to position a second parallel perpendicular to the first. Knowing the exact distances from the parallel to the reference surface, and from the reference surface to the point of tangency, it is easy to compute the value of n when various combinations of gage blocks are placed between the parallel and the button.

c. If the point of tangency is not specifically located with reference to some other precision surface on the gage, the second parallel (the one which is vertical, shown on fig. 237) is clamped in position perpendicular to the first without regard to its exact distance from the gage. The distance y from the parallel to the origin then can be established by placing the roll in position between the gage and a stack of blocks of convenient length h and trying various combinations of gage blocks between the roll and the second parallel until the distance between the roll and the second parallel has been determined. (Small values of h are best in performing this operation.) The value of n which corresponds to the selected value of h then is computed from the following equations:

$$\text{Cos } A = \frac{h+S}{R-r}$$

$$n = (R-r)\text{Sin } A - r$$

The nominal value of n can also be computed by substituting the selected value of h in the algebraic equation given in figure 237 and solving for n. This value of n, subtracted from the distance between the roll and the parallel will give y, the distance from the parallel to the origin.

d. The second parallel should be placed exactly 90 degrees to the first parallel. This can be done by placing a precision square and a gage block in the corner formed by the parallels. A second gage block 0.0001-inch larger than the first is used to check the uniformity of the space between the square and parallel in the same manner an angle plate is checked for squareness.

e. Select at least three different values of n at equal intervals. Compute the corresponding values of h from the equations shown on figure 237. Insert gage blocks equal in length to the selected values of n plus y (the distance from the origin to the second parallel), between the roll and the second parallel. Try various combinations of gage blocks between the roll and the first parallel and note how they compare with the nominal computed value of h.

f. In the equations, S is merely a mathematical quantity used to simplify the mathematical work. Its value will remain the same for all positions of the roll. The value of the angle A changes for each new position of the roll, and is determined by computing the sine and finding the corresponding angle in trigonometric

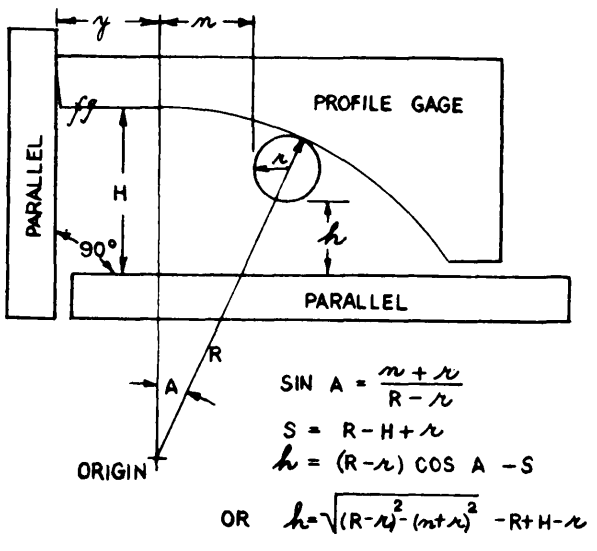

Figure 237. Checking inside radius (where radius is tangent to straight surface).

tables when the amount of n is known, or by computing the value of the cosine when the value of h is known.

g. If the measured values of h with blocks do not conform closely to the computed values of h, an indication of the nature and the amount of the error in the gage can be obtained by changing the position of the gage to correct for deviations in h. For example, if the deviations of the measured values from the computed values become progressively greater as h is checked from right to left in a set up such as that shown on figure 237, the gage can be loosened and tapped lightly on the left end until h is the same as nominal on the left as well as the right. This will place the straight surface out of parallel. If all values of h now check closely along the full length of the curve, the fault in the gage lies in the straight surface, which is tapered. The amount of the taper can be measured by trying gage blocks between the parallel and each end of the straight section.

h. If the errors in h do not increase progressively in any one direction, an analysis can sometimes be made by setting the tool maker's button against blocks which are equal in length to the nominal values of h, and measuring the variations in N.

i. The permissible tolerance in the position of the roll will depend on the dimensioning of the gage drawing. Generally, the tolerance of h will be limited by the following three factors:

(1) The tolerance on the position of the straight surface tangent to the radius.

(2) The tolerance on the vertical position of the origin.

(3) The tolerance on the radius. The variations in h should not exceed the tolerance of any of these dimensions, where they are given on the gage drawing. The variations in n should not exceed the tolerance on the horizontal position of the origin.

j. When there is a tolerance on the radius, it may be necessary to solve the equations shown on figure 237 for both the maximum and the minimum limits of R, and to see whether the lengths of the gage blocks are within the corresponding extremes of h and n. In these cases, it also may be desirable to measure the radius directly, according to the method shown on figure 236.

k. The most important consideration in deciding whether a template gage is within tolerance is the accuracy of the curvature, including its tangency with other surfaces. In the gage under consideration, the uniformity of the radius, and the alinement of the straight surface are much more important than the length or location of the straight surface or the radius with respect to other portions of the gage.

1. If a gage appears incorrect with one combination of blocks and roll, a set-up based on a slightly different assumption may make it possible to find the true condition. It is difficult to give general instructions for doing this because there are several different factors which affect the accuracy of a complicated profile gage. The checker should draw on his own experience and try experimental set-ups which appear to be best suited for the type and the condition of the particular gages on hand. Generally, the gage can be brought into tolerance most easily by shifting the assumed position of the origin.

8.21.1.3.3 Checking an inside radius where the radius is not tangent to a straight sur-

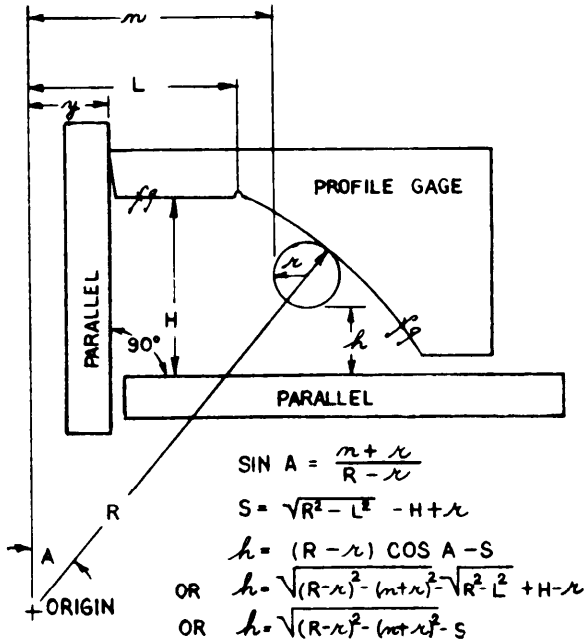

Figure 238. Checking inside radius (where radius is not tangent to straight surface).

face. Equations for use in checking this type of gage are shown on figure 238. The derivation of algebraic formulae given in this figure is shown on figures 239,240, and 241.

This gage can be checked by methods similar to those used for the template gage previously described. However, it generally is easier to analyze the errors if the gage is thrust against two located rolls instead of establishing the position by placing the straight surface parallel. The principal steps in this operation are as follows:

a. Clamp two parallels on a surface plate so they are accurately perpendicular to each other.

b. Place one roll on the plate in a position where it can contact the gage at the intersection of the radius and the straight surface. Fix the roll an exact distance from each parallel by means of two stacks of gage blocks of convenient size.

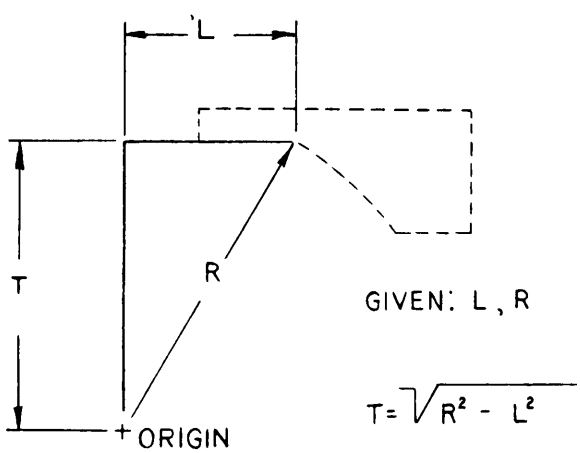

Figure 239. Computing distance from origin to straight surface.

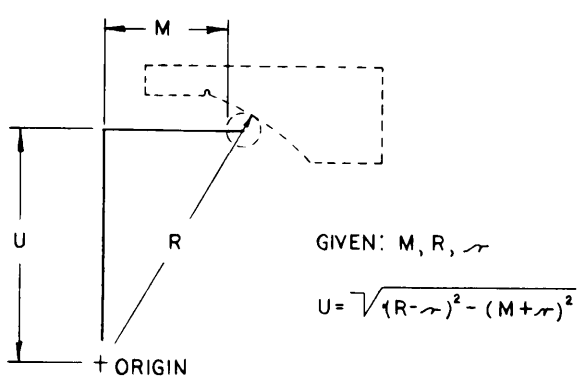

Figure 240. Computing vertical distance from origin to center of roll.

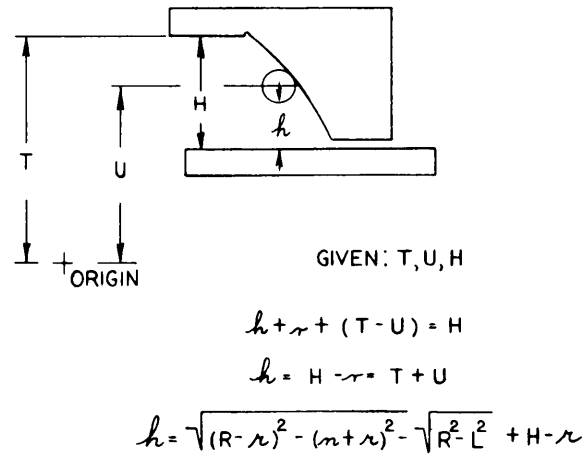

Figure 241. Computing distance from parallel to roll.

c. Knowing h, the length of the lower stack of gage blocks, compute the value of n from the following equations:

$$\text{Cos } A = \frac{h+S}{R-r}$$

$$n = (R-r)\text{Sin } A - r$$

Subtract from n the height of the second stack of gage blocks. (These are the blocks which would be horizontal shown on fig. 238.) This gives y, the distance from the parallel to the origin, which may be used to compute the lengths of gage blocks for other positions of the roll.

d. With these figures, compute the exact position of a roll which will contact the radius of the gage near the other end of the arc, and set another roll in this position by means of gage blocks. In this arrangement one stack of gage blocks will cross another. This can be done by placing a roll at the point of juncture, as shown on figure 242.

e. Place the gage on the surface plate so that it is snug against the two rolls and clamp it in position.

f. Check dimension H at both ends with gage blocks to be sure the straight surface of the gage is not tapered.

g. Assume at least three values of n, spaced at equal intervals, and compute the correspond-

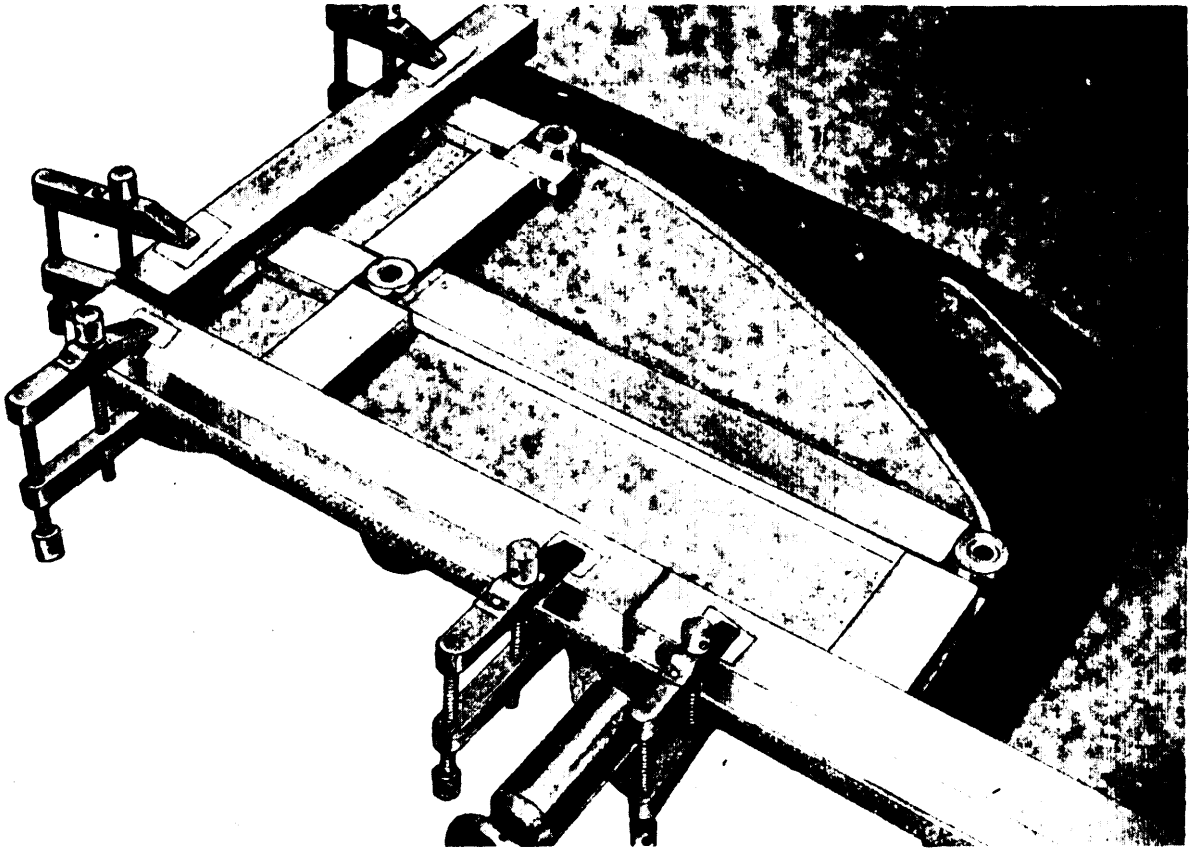

Figure 242. Setting template gage in position.

ing values of h from the equations shown on figure 238.

h. Establish the values of n by means of gage blocks and check the corresponding values of h with block combinations (see fig. 243).

i. As before, the variations in the observed positions of n and h should not exceed the tolerances given on the gage drawing for the position of the origin. If a tolerance is given on the gage drawing for the radius, it may again be necessary to solve the equation for both the maximum and the minimum values of the radius.

8.21.1.3.4 Checking an outside radius where the radius is tangent to a straight surface.

a. Clamp two parallels on a surface plate exactly perpendicular to each other.

b. Using gage blocks of any convenient length H locate the gage so that the straight surface is parallel to one of the parallels at a distance H.

c. Check the gage by methods similar to those described in the sections on profile gages with inside radii. Use equations shown on figure 244. The equations for finding n when h is known are as follows:

$$\text{Cos } A = \frac{S-h}{R+r}$$

$$n = L - r - (R+r) \text{ Sin } A$$

d. The limitations for the variation in the value of h are as previously described.

8.21.1.3.5 Checking an outside radius where the radius is not tangent to a straight surface. This type of gage is checked by methods almost exactly the same as those used by the preceding gage, using formulae shown

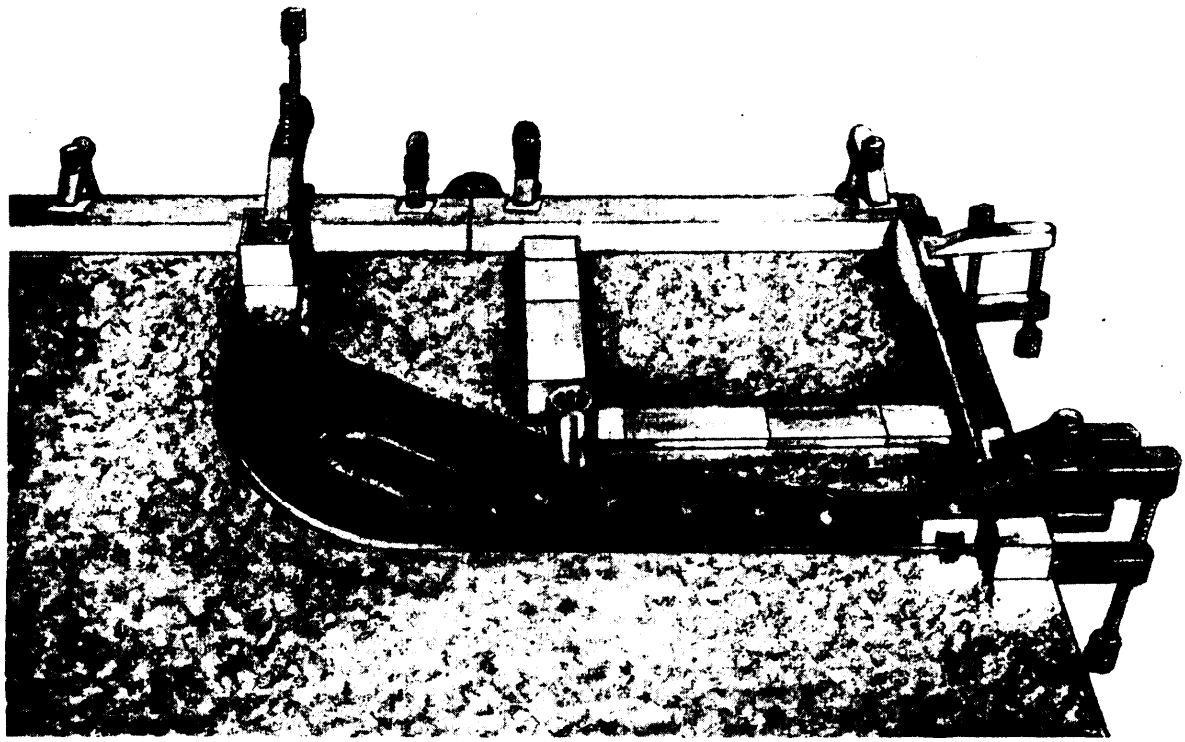

Figure 243. Checking radius on template gage.

on figure 245. The formulae for finding n when h is known are:

$$\text{Cos } A = \frac{S-h}{R+r}$$

$$n = K - r - (R+r) \text{ Sin } A$$

8.21.1.4 Checking template gages with special indicator fixture shown on figures 246 through 249 will effect a very great saving in time when used to check template gages which incorporate precision radii. The indicator is held in proper relationship to the center of the fixture by means of an adjustable support and bar. This bar can be detached to permit the use of bars of other lengths or to permit the use of an arm for supporting the gage in set-ups where it is desirable to move the gage and to hold the indicator stationary. In making such a fixture, it is extremely important to obtain a very close fit between the pivot at the center of the fixture and its bushing. A dial indicator graduated in units of 0.00005 inch should preferably be used with this device.

Small template gages often can be checked more easily by bolting them to an arm of a fixture and rotating them past a stationary indicator. A typical procedure is shown on figures 248 and 249.

a. Clamp the pivot block assembly at the edge of the surface plate with the axis of the pivot pin in a horizontal position. It may be necessary to place parallels under the fixture to obtain a convenient height.

b. Clamp the gage to be checked to the arm and locate any straight precision surfaces with respect to the origin (center of the pivot) by means of gage blocks and an indicator height gage as shown on figure 248.

c. Adjust an indicator height gage to a zero reading over gage blocks equal to the height of the origin plus the radius specified on the gage drawing.

d. Place the arm of the fixture in a vertical posititon. Place the contact point of the indicator on the radius of the gage and note the indicator reading. Rotate the arm and note any

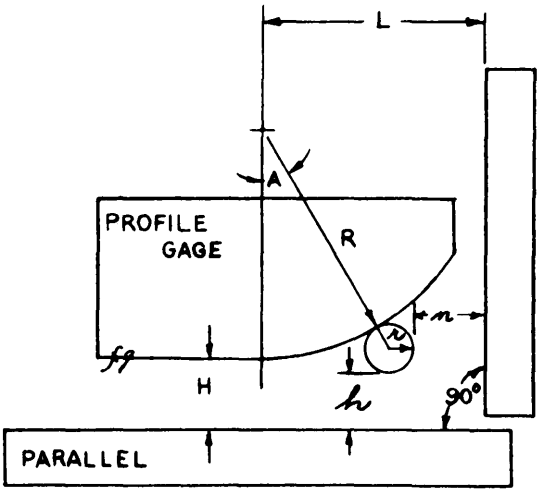

$$\sin A = \frac{L-n-r}{R+r} \qquad S = R+H-r$$

$$h = S-(R+r)\cos A$$

$$\text{OR } h = S-\sqrt{(R+r)^2-(L-n-r)^2}$$

$$\text{OR } h = R+H-r-\sqrt{(R+r)^2-(L-n-r)^2}$$

Figure 244. Checking outside radius (where radius is tangent to straight surface).

variation in the indicator readings over the entire length of the arc.

e. If the indicator reading does not remain constant, readjust the position of the gage on the arm until constant readings are obtained. The distance which the gage is moved indicates the amount of error in the radius of the gage.

8.21.2 Template gages for profile of angle. The angular surfaces on profile gages generally are checked by clamping the gage to an angle plate, mounting the angle plate on a sine plate, and checking the angles with an indicator height gage as specified in 8.5.3. For example, consider the gage shown in figure 250. The steps in checking the angles and the location of the intersection of this gage are as follows:

8.21.2.1 Clamp the gage to an angle plate and place the angle plate on a sine plate. The angular surface on the gage should be higher than the angle plate in order to permit indicating over the full width of the gaging surface.

8.21.2.2 Indicate over the surface c and adjust the position of the gage until this surface is accurately horizontal. Then clamp the gage securely in position on the angle plate. The surface g should not touch the sine plate unless it is a precision surface which is supposed to be accurately parallel to c.

8.21.2.3 While the gage is still mounted with the surface c horizontal, place a precision roll in the angle formed by f and e. Use an indicator height gage to find the distance Q from the top of the roll to the surface c (see fig. 251).

8.21.2.4 If f and d are precision surfaces, turn the angle plate 90 degrees and indicate over f and d to be sure that they are perpendicular to c.

8.21.2.5 Turn the angle plate back and set the sine plate at the angle A. Indicate over

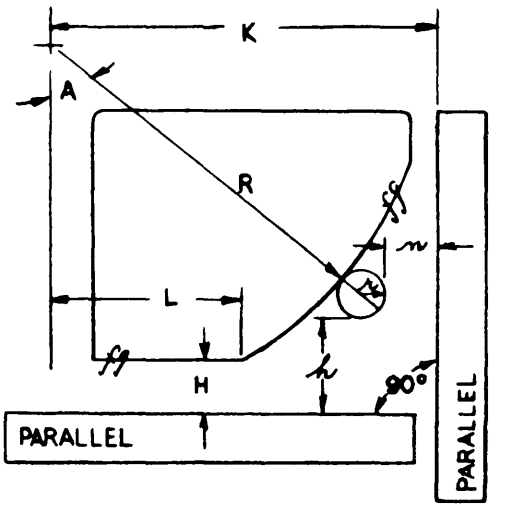

$$\sin A = \frac{K-n-r}{R+r} \qquad S = \sqrt{R^2-L^2}+H-r$$

$$h = S-(R+r)\cos A$$

$$\text{OR } h = S-\sqrt{(R+r)^2-(K-n-r)^2}$$

$$\text{OR } h = H-r+\sqrt{R^2-L^2}-\sqrt{(R+r)^2-(K-n-r)^2}$$

Figure 245. Checking outside radius (where radius is not tangent to straight surface).

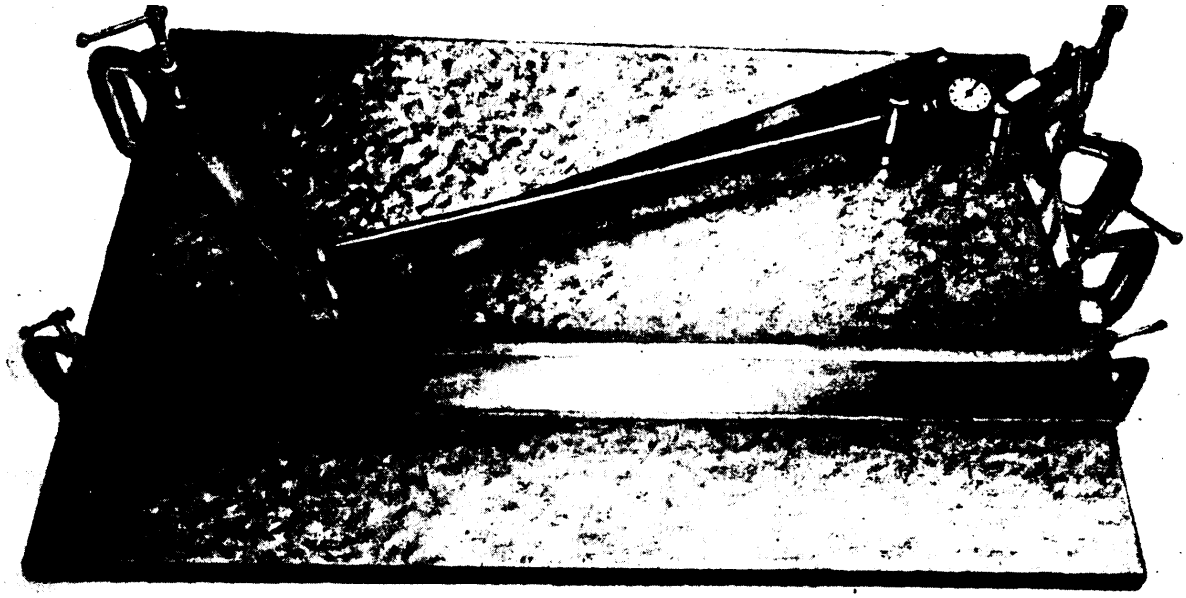

Figure 246. Set-up for checking a large radius with a special indicator fixture.

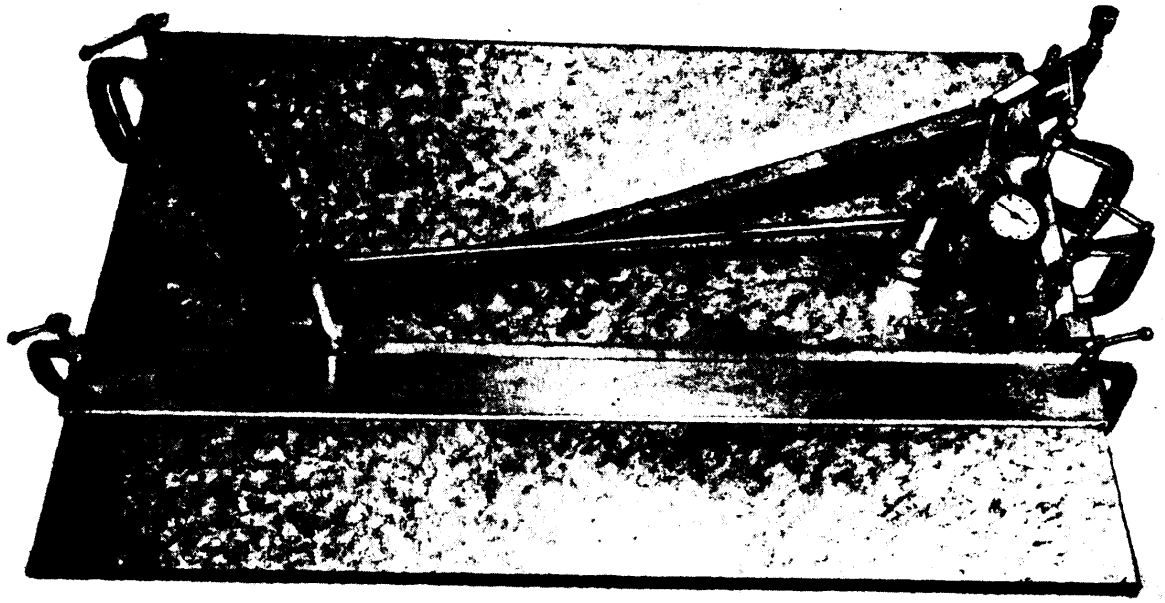

Figure 247. Checking a large radius with a special indicator fixture.

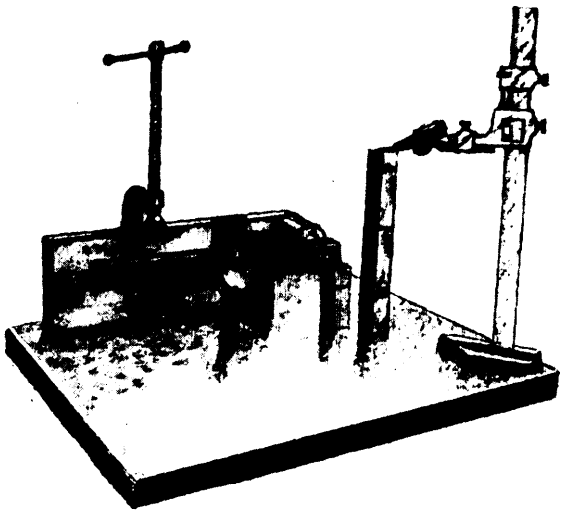

Figure 248. Set-up for checking a small radius with a special indicator fixture.

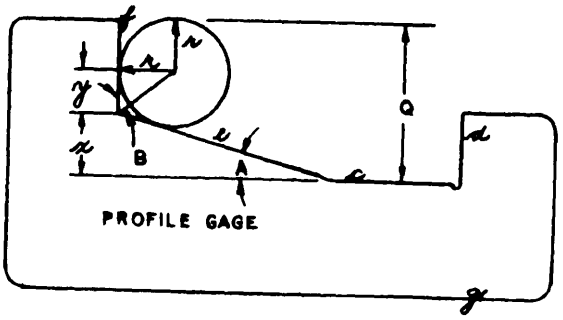

GIVEN:- $Q, r \angle A$

$$B = \frac{90° + A}{2}$$

$$y = r \cot B = r \cot \frac{90° + A}{2}$$

$$Q = x + y + r = x + r \cot \frac{90° + A}{2} + r$$

$$x = Q - r\left(1 + \cot \frac{90° + A}{2}\right)$$

Figure 250. Checking template gage for location of intersection.

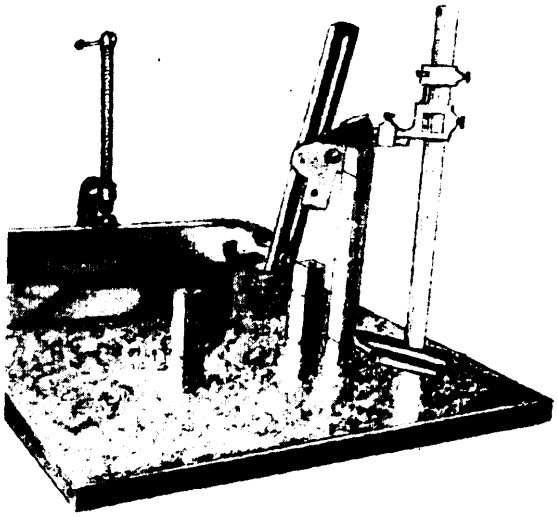

Figure 249. Checking a small radius with a special indicator fixture.

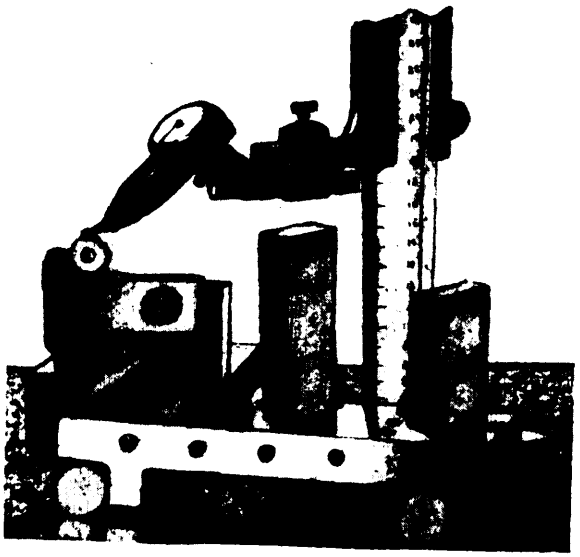

Figure 251. Measuring distance to apex on template gage.

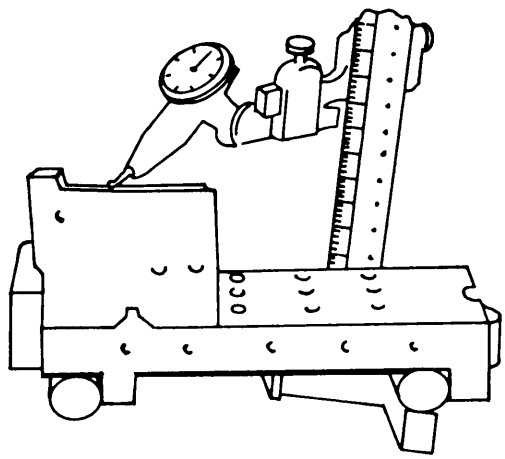

Figure 252. Checking template gage for accuracy of angles,

the surface e (see fig. 252). If it is not horizontal try various combinations of blocks until it is, and note corresponding error in angle.

8.21.2.6 Compute the value of x, the location of the intersection of surface e with surface f, by means of the formula shown on figure 250. In this computation, use the measured value of angle A.

8.21.3 Profile plug gages. The gages generally are used as check gages for special receiver gages and receiver profile gages by means of blueing. Being reference gages, profile plugs usually are made to very close tolerances and must be inspected carefully by measurement over rolls.

8.21.3.1 Measuring plug with plain radius. The formula shown on figure 253 for this measurement can also be used to check convex radii on template gages where there are no straight precision reference surfaces.

When A is positive use

$$R = \frac{(M-2r)^2}{8(A+2r)} + \frac{A}{2}$$

When A is negative use

$$R = \frac{(M-2r)^2}{8(2r-A)} - \frac{A}{2}$$

The set-up used may be either a measurement over rolls or a check by means of a channel bar fixture. For measurements over rolls, a plug gage of this type generally rests on a gage block wrung on a tool maker's flat. Two stacks of gage blocks of equal height are selected to support the rolls at the desired height and measurements are then taken over the rolls. The gage is tilted at several. angles and rotated to test the uniformity of radius for each selected combination of supporting gage blocks. When tolerances are liberal, micrometers can be used for this measurement. When tolerances are close, a universal measuring machine is a suitable instrument. Plugs with plain radii sometimes are permitted to have a flat at the bottom of the curved section. In such cases, the gage must always be tilted enough during measurement to prevent the flat from bearing on the gage blocks. These gages should not be clamped in position, or forced down with excessive pressure, because of possible injury to the gage blocks. The object of resting the bottom of the plug on gage blocks is to permit at least one measurement to be taken near the bottom of the radius with the outside blocks lower than the central blocks. It should be noted that the value of A shown on figure 253 is negative when the outer sets of blocks are shorter than the central blocks. When A becomes negative the accuracy of the R value will decrease as the contact elements of the rolls approach the tangent of the center block. Use the second formula shown on figure 253 for negative values of A.

8.21.3.2 Measuring profile ogive check plugs with single radius. These gages are

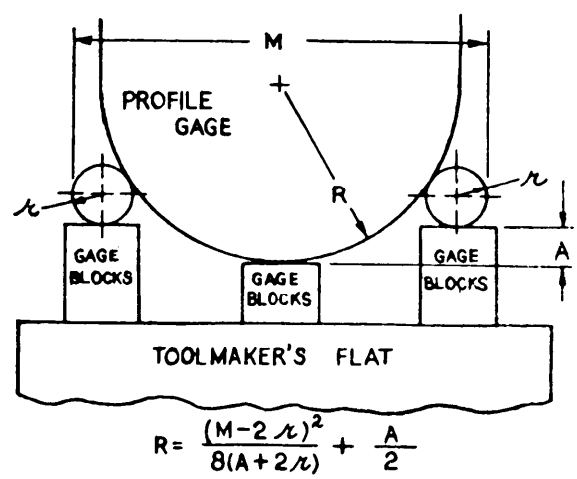

Figure 253. Checking outside radius (where there is no precision reference surface).

SUPERSEDES PAGE 169 OF 12 DECEMBER 1950

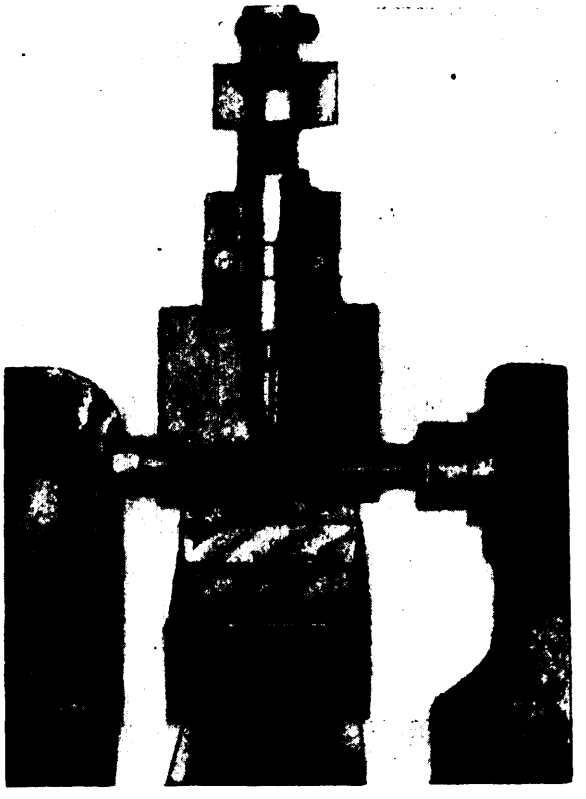

Figure 254. Measuring profile ogive check gage.

checked by holding them upright over a tool maker's flat or hold-down fixture and measuring over rolls as shown on figure 254. Before any measurements are taken, the axis of the gage must be accurately vertical. If the gage has a precision ground flat at the top of the gaging member, it is possible to check the perpendicularity of this flat with the axis of the gage before mounting the gage for measurement over the rolls. The gage is first mounted between centers and rotated with an indicator in contact with the flat in a set-up similar to that used for checking the squareness of the front face of a taper plug (see fig. 163). The point of the gage is put in a female center and the other end is held by a male center. If the flat on the gage is perpendicular to the axis, the gage can be established in a vertical position by adjusting the fixture shown in figure 254 until the flat is parallel to the base of the hold-down fixture. The height of this horizontal surface above the tool maker's flat is then determined with an indicator height gage in order to compute the value of the dimension L when selected lengths of gage blocks support the rolls (see fig. 255).

$$\text{Sin } A = \frac{L}{(R+r)}$$

$$M = D + G - 2R + 2\,(R+r)\cos A$$
$$M = D + G - 2R + 2\sqrt{(R+r)^2 - L^2}$$

Gage blocks suitable for measurements at five or more points at convenient intervals along the surface of the gage then are selected. The corresponding values of L are substituted in the equations shown on figure 255 to determine the proper value for the measurements over the rolls. Time will be saved if the first measurement is taken with the rolls in the position nearest the point at the bottom of the gage. If the measurement over the rolls does not fall within the specified tolerance, vary the height of the gage blocks supporting the rolls until the measurement is correct. Take all the other measurements over the rolls with the gage blocks altered by exactly the same amount, and note whether the measurements over the rolls fall within tolerance. The effect of changing the height of the stacks under the rolls is to shift the origin of the radius. If the change in the size of the gage blocks is less than the tolerance on the horizontal dimension which determines the position of the origin on the gage drawing,

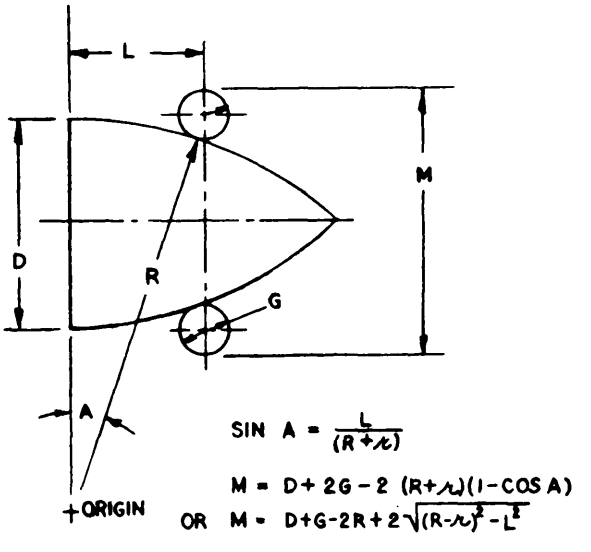

Figure 255. Measuring profile check plug (single radius).

and all subsequent measurements taken over the rolls are within tolerance, the gage is acceptable. If the required change in the gage blocks to bring the measurements within limits is greater than the horizontal tolerances on the origin, the gage is not acceptable and the change in the size of gage blocks from basic will indicate the error in the location of the origin. The purpose of taking the first measurement at the lower position of the rolls is that errors in origin, the type most commonly found have their greatest effect at this point. If the position of the gage is changed to make the measurement over the rolls correct at this point, it is highly probable that measurements over rolls at all other points will be within tolerance and that further adjustments in the position of the gage will be unnecessary. When the receiver corresponding to the check in question is used in conjunction with a snap gage for checking ogival length, the error in the horizontal placement of the origin (the dimension L shown on fig. 255) must not be greater than the tolerance on the swell diameter, D, unless another tolerance on the origin is explicitly stated on the gage drawing. The perpendicularity of the flat near the swell diameter must be accurate within the tolerance on the location of the origin. When the receiver corresponding to the check in question is used only for a profile check and no tolerance is given for the origin on the gage drawing, a variation of a few thousandths of an inch in a direction which makes the check longer is permissible. It is generally assumed that the measurements over the rolls at any point along the axis of the gage should not vary from basic by an amount greater than the tolerance on D, the diameter across the top of the gage. However, where there is a tolerance given for R on the gage drawing, the gage may sometimes be found within the limits by solving the formulae shown on figure 255 for both the maximum and the minimum values of R.

8.21.3.3 Measuring profile ogive check plugs with double radius. The larger radius of these plugs is checked with the same methods and formulae used to inspect the profile ogive gage with a single radius. The smaller radius R_1, which determines the form of the gage near the point, is measured by the methods previously described but with the formulae shown on figure 256. The first readings should be made at three points: the swell (largest) diameter, the point of tangency of the two radii, and at a location near the point of the gage. These measurements can be used as a basis for relocating the gage in case there is an error in origin. After this, the intermediate points are checked. Figures 257, 258, 259, and 260 explain the methods used to derive the trigonometric formulae shown on figure 256. The first formula for cosine B shown on figure 257 applies to an oblique triangle. The derivation can be found in textbooks on trigonometry. The formulae for R_1 should not be used when the rolls are in a position over a surface determined by R, or vice versa. When L is greater than (R+ r) sin C, the rolls are in a position to measure R_1. On figure 256, the values of angles A, B, and C will remain the same for any given gage. The value of the

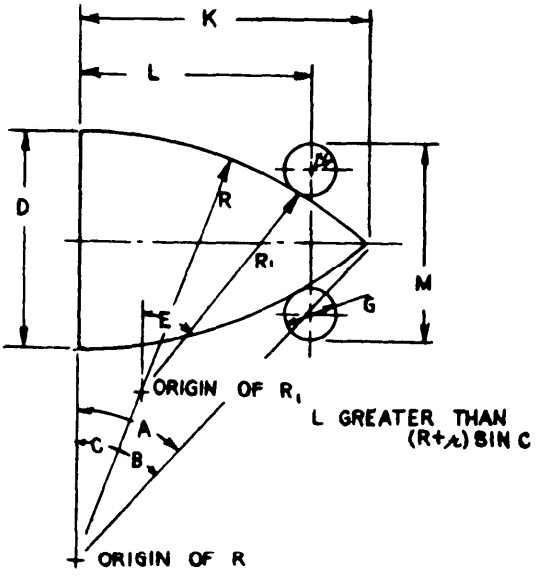

$$\tan A = \frac{K}{R - \frac{D}{2}}$$

$$\cos B = \frac{(K \operatorname{cosec} A)^2 + R^2 - 2RR_1}{2(R - R_1)\, K \operatorname{cosec} A}$$

$$C = A - B \qquad \sin E = \frac{L - (R - R_1)\sin C}{R_1 + \frac{1}{2}G}$$

$$M = D + G - 2R + 2(R - R_1)\cos C + 2\left(R_1 + \frac{G}{2}\right)\cos E$$

Figure 256. Measuring second radius of profile check plug.

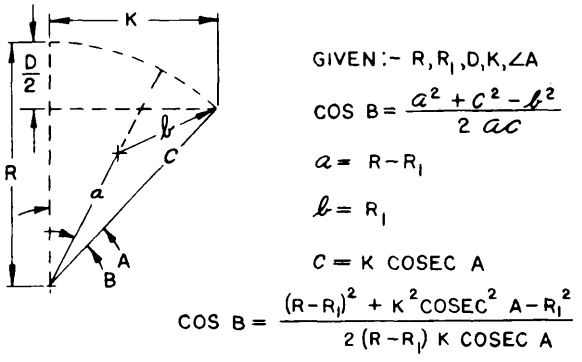

Figure 257. Computing point of tangency of double radius.

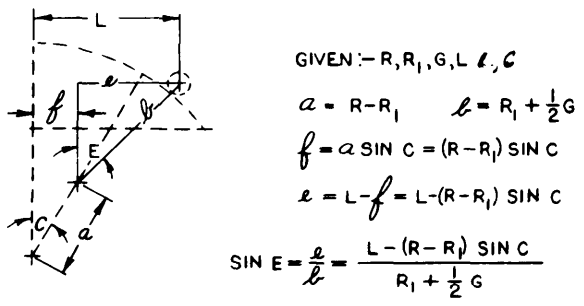

Figure 258. Computing variable angle in double radius measurement.

angle E must be recomputed for each different position of the rolls.

8.213.4 Measuring plugs with convex and concave radii. These measurements are made by standing the gage in a vertical position and measuring over precision rolls supported by gage blocks in a manner similar to that used for profile ogive gages. The limiting values of measurements over the rolls, corresponding to the maximum and the minimum tolerance limits given on the gage drawing, can be computed from the formulae shown on figures 261 and 262. The inspector usually can determine whether the rolls are resting on the convex or the concave surface by visual inspection. However, in doubtful cases or when a very small gage is being inspected, use can be made of the fact that the roll rests on the convex surface when L_1 is less than:

$$\frac{(N+K+P)\ (R_1+r)-N}{R_1+R_2}$$

The rolls rest on the concave surface when L_2 is less than:

$$\frac{(N+K+P)\ (R_2-r)-P}{R_1+R_2}$$

On gages of this type a reading should be made at the point of tangency of the two radii because errors occur at this place more frequently than at other points on the gage. In formulae shown on figures 261 and 262, angles A and C, change for each new position of the rolls but angles B and D remain the same for any given gage.

$$M = D_1 + G - 2R_1 \text{ Cos } B + 2(R_1 + r) \text{ Cos } A$$
(see fig. 261).

$$M = D_2 + G + 2R_2 \text{ Cos } D - 2(R_2 - r) \text{ Cos } C$$
(see fig. 262).

8022 INSPECTION OF FIXTURE GAGES

8.22.1 Flush pin type fixture gages. The following procedure should be followed in inspecting this type of gage:

822.1.1 Check the gage for general functional characteristics. This includes moving all flush pins to see that they operate freely, making sure they can move below the minimum steps and above the maximum steps, checking for shake in the flush pins, making sure that the corners of the pins at the gaging end are sharp as well as the f aces of the steps, making sure that

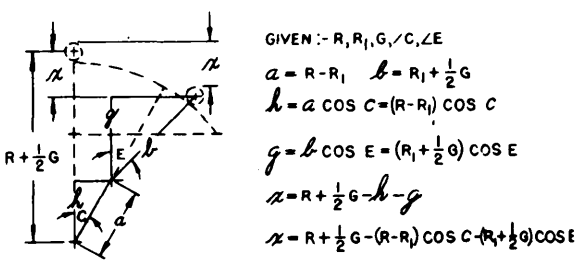

Figure 259. Computing position of roll in double radius measurement.

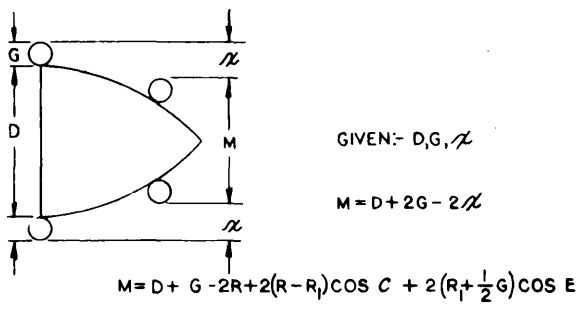

Figure 260. Computing measurement over rolls in double radius measurement.

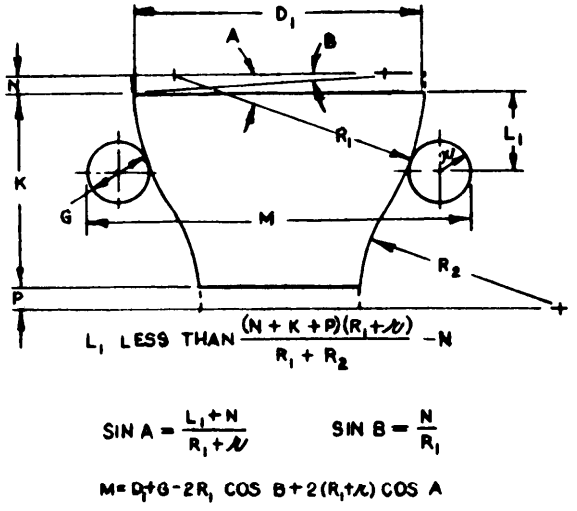

Figure 261. Measuring outside radius of profile plug with outside and inside radii.

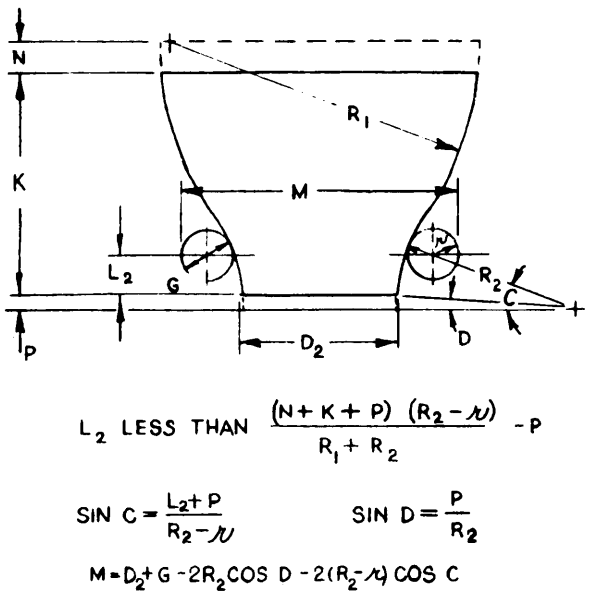

Figure 262. Measuring inside radius of profile plug with outside and inside radii.

all screws are tight and checking all dowel pins for proper fit. This last point is particularly important because the dependability and accuracy of any gage is limited by the fit of the dowel pins used in assembly. The dowel pins can be checked by loosening the screws and tapping the block and the pins lightly. If the position of the block has shifted in the least when the screws are retightened after this operation, the dowel pins do not fit properly.

8.22.1.2 The hardness check must be made at more different points than on most other types of gages. In addition to the gaging surfaces, all surfaces which are made to a slide fit, all surfaces which support the work, and all other portions of the gage which will be subject to wear should be checked for hardness. The shoulder of small pins, generally those less than ⅛ inch in diameter, should be drawn to a hardness of about C58 to C60. All other surfaces subject to wear should be hardened to C63 to C66, unless other specifications are given on the drawing.

8.221.3 Clamp the gage on an angle iron and use an indicator height gage to locate the points which determine the position of the component with reference to the gage. The sides or base of the gage should never be used as reference places. If a long straight precision surface on the gage is used for locating the component, the gage can be set up by indicating over this surface and adjusting the position of the gage on the angle iron until this surface is horizontal. If no such surface exists, the height of two precision surfaces should be measured by means of an indicator height gage and gage blocks and the position of the gage adjusted until the centerline from which these points are dimensioned is horizontal. Select for this purpose the two surfaces which have the closest location tolerance. In general, the gage should be clamped as close to the surface as possible in order to minimize errors in measuring heights and to provide a more stable set up. Tool maker's clamps are better than C clamps, particularly on small gages, because they have less tendency to spring the base out of position.

8.22.1.4 Once the locating surface or the centerline of the gage has been established, the gage should be tightened securely in position on the angle iron and should not be disturbed until the inspection has been completed. Clamps should be positioned so that the checker will not have to move the clamps more than is absolutely necessary when the angle iron is set in different positions to permit inspection of the various parts of the gage. If it is necessary to

move the clamps, at least three clamps should be used. Only one clamp should be loosened and relocated, leaving two clamps securely fastened at all times.

8.22.1.5 Check the distances between the locating points. This usually is done with an indicator height gage and gage blocks. When the distance between two points is at an angle the unit should be set up on a sine plate so that the dimension in question is vertical. When this method is impractical gage blocks are tried between the pins until the length which provides a snug fit between the pins is found. The block should not be forced between the pins because small pins are easily bent enough to throw them outside of close tolerance limits.

8.22.1.6 Check the angular position of the pins by setting the sine plate so that the pins are horizontal. Indicate over both ends of each pin. Check for shake at this time, using the indicator to measure the shake.

8.22.1.7 The gaging dimensions of flush pins are checked by using a sine plate to bring the flush pins vertical, with the steps at the top. This can be done by turning the angle iron 90 degrees after each pin is checked for angularity. Determine the height of the fixed pin or surface to which the end of the flush pin is dimensioned, add the dimension given on the drawing to the height of this reference surface and combine gage blocks equal to the sum. Slide the upper blocks sideways so that they overhang as shown on figure 263 and bring the flush pin down on the top of the blocks to see whether the pin is flush with the step within the tolerance on the gage drawing. This check must be made on both steps, using the maximum and the minimum dimensions given on the gage drawing for the initial heights of the gage blocks.

8.22.1.8 The top of the flush pin and the steps should be checked for parallelism at the same time. Parallelism must be such that no point on the top of the flush pin exceeds the gage maker's limits for the dimension of the flush pin.

8.22.1.9 When several flush pin fixture gages of the same size and design are checked, considerable savings in time will be effected by procuring master gages in the form of a component, one for the maximum component limits and another for the minimum limits. These masters can be inserted in the gage and the position of the pin with reference to a step measured.

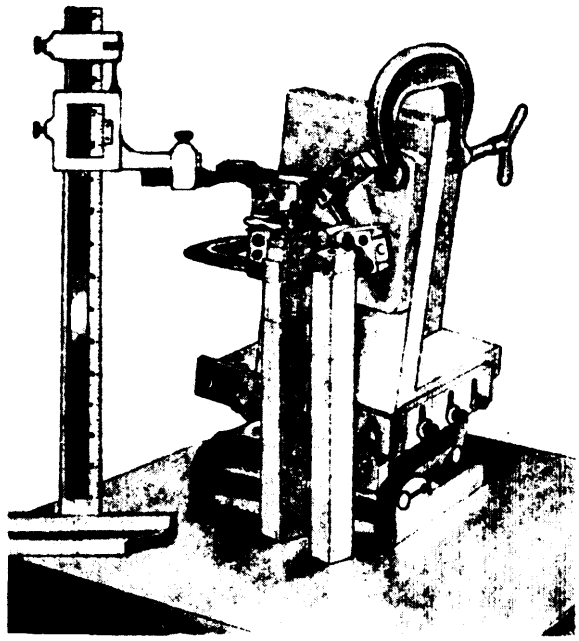

Figure 263. Checking flush pins and steps on fixture gage.

8.22.2 Indicator type fixture gages. These gages are checked by the same general methods described in the preceding paragraphs. However, where the flush pins were checked with respect to the steps on the preceding gage, setting gages or gage blocks are placed between the work locating surfaces of the indicator type gages, and the gaging pins and indicators checked for total range which should exceed the component tolerance. The dial indicators themselves are checked in accordance with 8.23.1.

8.22.2.1 The spindle of the indicator should be parallel to the axis of the gaging pin against which it rests.

8.22.2.2 On this type of gage, all surfaces which contact the component should be in proper alinement, even though specific tolerances for them are not given on the gage drawing.

8.22.2.3 The location and parallelism of centerlines generally are established by means of an indicator height gage and gage blocks.

8.22.2.4 The tension of any springs used to move the gaging pins should be sufficient to provide proper positioning of the pin yet not

so great that it is difficult to insert and remove the component.

8.22.2.5 The inspection of indicator fixture gages which measure concentricity is largely a matter of checking alinement. All "V" supports, centers, and bearings should be alined both vertically and horizontally. All bearings and other moving parts should rotate freely.

8.22.2.6 The final step in inspecting concentricity gages is to place a master or a component in a gage, and be sure it rotates freely and that all supporting members make contact properly. It is easy to note whether bearings are making proper contact by attempting to rotate them when the master is standing still.

8.23 INSPECTION OF MISCELLANEOUS GAGES

8.23.1 Dial indicator gages. General information concerning standards for dial indicators is to be found in Commercial Standards Booklet CS (E) 119–45 published by the Department of Commerce and available from the Superintendent of Documents, Washington 25, D. C.

8.23.1.1 The proper inspection and repair of dial indicators requires considerable specialized knowledge. For this reason it is advisable to assign the responsibility for checking and repairing all dial indicators to one person in a laboratory.

8.23.1.2 The following steps must be taken in inspecting dial indicators:

a. Check for sticking, This is done by moving the spindle slowly from the rest position to the maximum limit and return by means of hand pressure.

b. Check for spindle looseness by pushing the spindle back and forth in a direction perpendicular to its axis. Check for rack pin side movement by attempting to rotate the spindle. The specifications given for these checks mean the total amount by which the indicator needle varies from its rest position when the checks are made. Note whether the needle comes to rest at the same point each time pressure is released.

c. Note whether the spring pressure is excessive. Experience will help the operator to judge the "feel" imparted by proper indicating spring tension.

d. Set the indicator up in a precision bench micrometer in a horizontal position such that the spindle is in line with the movable anvil and bears on this anvil (a special fixture can be constructed for this purpose if many indicators are to be checked). The calibration of the indicator is checked by advancing the micrometer to various points and noting whether the changes in the indicator are the same as the changes in the micrometer reading. On an indicator which has been graduated 0-50-0 a check should be made at the points 0, 20 and 40 to the limit of range of the indicator. In moving back in the other direction checks should be made by the points 50, 30, 10, and 0. Indicators with other graduations should be checked at the corresponding points. After the limits of the indicator scale have been reached at this check and measurements are taken in the other direction it should be noted whether there is any backlash and if there is, this should be entered on the tag as a separate defect.

8.23.1.3 The following specifications are followed in classifying the indicators:

Class I—Excellent.

a. Does not stick.

b. Repeats to zero with indicator at rest. On indicators graduated to 0.0001 inch or less the tolerance for this requirement is one graduation. On indicators where the graduations are 0.0005 inch or more the tolerance is 0.0002 inch.

c. No excessive spring pressure.

d. Spindle play and rack pin side play held within standard specifications. If the graduations are 0.0001 inch or less the pointer variation must be held within 0.000025 inch for this check. If the graduations are 0.0005 inch or greater the pointer variation should not exceed 0.0002 inch.

e. Accuracy of calibration within one unit graduation plus or minus at any point covering the entire range of indicator.

Class II—Good.

a. Does not stick.

b. Most points within the standard specification listed under class 1 and all other points nearly within specifications. (No explanation is needed on the tag.)

c. Accuracy of calibration substantially within specifications for class I.

Class III—Fair.

a. Does not stick.

b. Spindle looseness, rack pin side play and repeat error held substantially within tolerance.

c. Accuracy of calibration within one graduation plus or minus at any point covering at least one-half the number of revolutions of the entire range of the indicator. The defects of calibration should be noted on the tag to be attached to the indicator for informing the user over what range the indicator is accurate.

Class IV—Poor.

Indicator requires repair for any one of the following reasons:

a. Sticks.

b. Backlash present when applied pressure on stem is released slowly.

c. Stem play outside tolerance limits as noted under class I.

d. Rack pin side movement outside tolerance limits as noted under class I.

e. Does not repeat at zero as specified under Class I.

f. Calibration outside tolerance limits as noted in class III.

8.23.2 Special indicator snap gages. By this class of gage is meant special gages in which the component is placed in a receiver and slid under a movable gaging member which actuates an indicator gage, and all other special indicator asemblies which would not ordinarily be considered indicator fixture gages. The following are the principle steps to be taken in checking gages of this type:

8.23.2.1 Check the dial indicator in accordance with 8.23.1.2 if it has not already been checked. If the dial indicator has been inspected, check the information on the tag to see whether the class of indicator is satisfactory for use on the part in question. If the indicator is class III, make sure that it is positioned in the gaging assembly so as to permit the use of the range over which the calibrations are accurate.

8.23.2.2 Check the alinement of the anvils. This can be done visually by noting how the check gage fits between the anvils. When the alinement of the anvils must be held closely, a contour projector or an indicator height gage is used.

8.23.2.3 Make sure that the range of the gage is sufficient to permit measurements of components which are undersize and components which are oversized. The range of an indicator gage should be at least twice the component tolerance.

8.23.2.4 Inspect checks for setting the gage, if provided, and try them in the indicator gage assembly. If checks are not provided or if the checks are not of the same form as the part, try a component part in the gage to see whether the gage has been made and designed to permit proper functioning.

8.23.2.5 If the drawing specifies that the component limits are to be marked on the indicator dial this can best be done with an ordinary red pencil. Carbon tetrachloride can be used to remove these pencil marks if the component limits are changed. When marking limits on the indicator dial use a setting gage equal to the minimum component limit and a setting gage equal to the maximum component limit for establishing the position of the limit lines on the dial. Do not mark off spaces on the dial on the basis of the dial graduations. Using the dial graduations will introduce errors of the indicator mechanism into the readings whereas establishing the limits directly by means of checks will tend to eliminate these errors.

823.2.6 Check all working parts to see that they are a free fit. Make sure there is no shake or side movement where this would affect the functioning of the gage.

8.23.2.7 If any of the gaging members are kept in position by means of springs, check the spring pressure to make sure that the pressure is not too little to assure proper contact nor too great to permit easy functioning of the gage.

8.23.2.8 Sharp edges on the anvils or on the gaging member near the point where the component enters may make it very difficult to insert the component. Stone all such edges sufficiently to permit easy entry of the component.

8.23.3 Spanner gages. Spanner gages are also commonly known as multiple pin gages for location of holes. The steps employed in their inspection follow:

8.23.3.1 Test each pin with the fingers to make sure it is tight.

8.23.3.2 Measure the diameters of' the pins and check them for out-of-round. When the tolerances on these diameters are close and it is impracticable to position them between the anvils of a bench micrometer or other precision measuring instrument, the diameter can best be checked by making small snap gages from stacks of rectangular gage blocks. This is done by building a stack of blocks equal to the maximum dimension of the diameter and then wringing a block to each side of the stack in a position such that the two added blocks will overhang the stack and effectively serve as the anvils of a snap gage (see 8.5.2.7 and fig. 139). The process is repeated with other combinations of blocks until the size of the pin is determined to the nearest 0.0001 inch. In checking for diameter and out-or-round the inspector should also note whether there are any flats near the ends of the pins.

8.23.3.3 Check for parallelism of all pins. This is done whenever possible by mounting the gage on an angle plate and by indicating along all pins. When this is not practical, stacks of gage blocks calculated to fit snugly between the pins are inserted, and the inspector sights between the sides of the pins and the ends of blocks to see whether they are parallel.

8.23.3.4 Check for canted pins. This is done by turning the angle plate over 90 degrees and indicating again for parallelism. When it is impractical to indicate, gage blocks should be placed between each pin and two other pins if possible.

8.23.3.5 Check the center distances between the pins. This is done, whenever possible, by means of an indicator height gage. When this method is impractical, stacks of gage blocks are placed between the pins. It is important not to force blocks between pins because small pins can easily be bent enough to throw them outside of close tolerance limits.

8.23.3.6 If there are more than two pins on the gage, it is best to select the pins with the smallest tolerances and greatest distance between centers as reference pins.

8.23.3.7 If all pins or many pins in a multiple pin gage appear to be outside of the specified limits, try using two different pins for reference. Sometimes an error in the location of one reference pin will make all other pins appear to be improperly placed, even though they may be satisfactory.

8.23.4 Dovetail gages. The first step in the inspection of dovetail gages is to check the angle. This may be done by measuring over rolls of different sizes. Because the angles may have compensating defects, each angle should be measured individually. A way to check the angle of either a male or female dovetail gage is to set the gage upright on the angle plate and to measure the height of three or more different sizes of rolls as shown on figure 264.

8.23.4.1 Another method is to use a set-up similar to that shown on figure 264, but instead of using different sizes of rolls, use one size roll and check different positions by placing various combinations of gage blocks between the roll and the angle iron. The increase in the height of the roll, divided by the increase in the blocks, will equal the tangent of angle A. It is necessary to check the angles of the sides of the dovetail independently, as specified in the

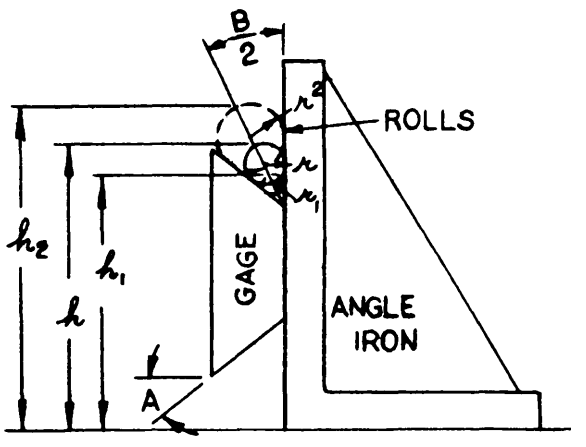

$$\frac{r_2 - r}{h_2 - h + r - r_2} = \tan\frac{B}{2}$$

$$\frac{r - r_1}{h - h_1 + r_1 - r} = \tan\frac{B}{2} \qquad A = 90° - B$$

Figure 264. Checking angle of dovetail gage.

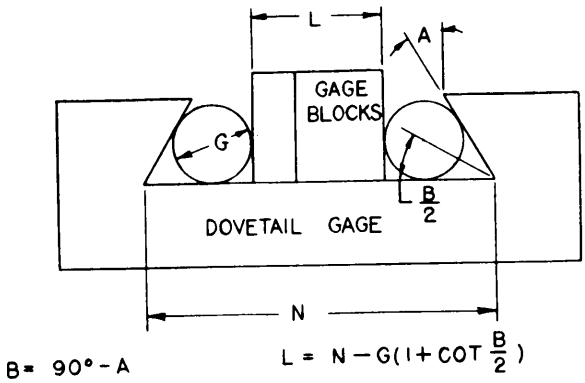

Figure 265. Checking female dovetail gage.

previous two paragraphs, instead Of measuring the angles simultaneously by placing blocks between two rolls in the case of female gages, or by measuring over two rolls in the case of male gages. If the two angles are checked at once, they may appear to be within tolerance, when in fact, both angles are out of tolerance in directions such that the error in one angle tends to nullify the effect of the error in the other angle.

8.23.4.2 The distance between the apexes on female dovetail gages can be measured by placing two precision rolls between the angles and by placing a stack of gage blocks between the rolls. Rolls should be a size which will permit them to make contact with the sides of the angles about halfway along their length. The length of the stack of gage blocks can be computed from the formulae shown on figure 265. If the stack of blocks is not a snug fit between the rolls, the change in the length of the blocks required to bring about a good fit will indicate the amount by which the distance between the apexes differs from the basic dimension N. This check should be made at both ends of the gage. It is important not to use much force in pushing the gage blocks between the rolls.

8.23.4.3 The distanm between the apexes of the male dovetail gage is obtained by taking a measurement over rolls, as shown on figure 266. This measurement should never be made by measuring directly across the apexes.

8.23.4.4 When a male dovetail gage is to be inspected by fitting it to a female check, this is done by placing a coat of blueing on the female gage and by trying the male gage at each of its ends. At least ¾ of the blueing should be removed. The male gage should also be inserted completely into the female to see whether there is any shake or side play.

8.23.4.5 Large inaccurate radii on dovetail gages can be checked with a radius gage. Where the radii are small, or when they are dimensioned with fairly close tolerances, a contour projector usually provides the best means of checking.

8.23.4.6 Tapered dovetail gages can be checked rapidly and accurately through the use of a precision indexing plate. The steps to be taken in using this method are as follows:

a. Check the precision sides (angles) of the gage by rubbing a little blueing on a flat surface and drawing the sides of the gage across this surface. If the gage has a good finish, but does not seem to make a good bearing when the blueing test is made, it may be necessary to measure the gage over a pair of precision balls as specified in 8.23.4.8. If a faulty bearing appears to be caused chiefly by a rough finish, the gage should be rejected.

b. Clamp the gage onto the plate with the large end horizontal and at the same height as the center of the plate (see view A, fig. 267). When the indexing plate method is used, the end surface of the dovetail must be precision ground.

c. When a large number of gages of the same size are to be inspected, a great amount of time will be saved if a block with a straight precision ground edge, or a small parallel is clamped or bolted to the indexing plate just above the posi-

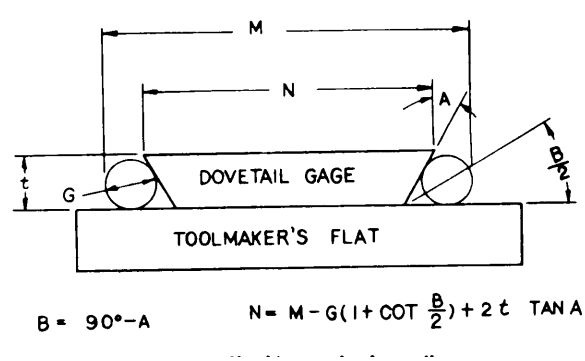

Figure 266. Checking male dovetail gage.

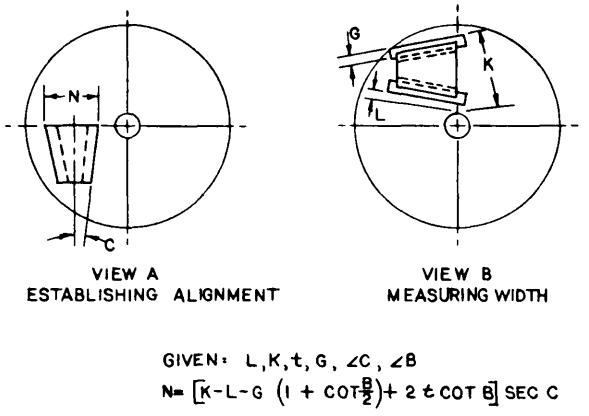

Figure 267. Measuring width of tapered dovetail on an indexing plate.

tion taken by the gage. The straight precision surface of this block should be established in a position through a centerline of the indexing plate. Then when each gage is placed on the plate, alinement can be established easily and rapidly by placing the top end of the dovetail against the block.

d. Rotate the indexing plate clockwise through an angle equal to 90 degrees minus C, the half angle of the taper as specified in the gage drawing. Hold a precision roll under the side of the gage and use an indicator height gage to determine whether this roll is horizontal. If it is not, determine the value of the half angle of taper by changing the angular position of the indexing plate until the roll is horizontal.

e. Use three sizes of rolls or three combinations of gage blocks and a roll to determine the value of the angle B, the angle made by the dovetail side in a plane perpendicular to the sides of the dovetail. In order to check a tapered dovetail gage properly, it is important to understand the difference between the angle of the side and a plane perpendicular to the sides of the gage, and the same angle in the plane perpendicular to the axis of the gage. This relationship is shown on figure 268. The angle of the dovetail side in the plane perpendicular to the sides of the gage is angle B, as shown in section BB. The same angle in the plane perpendicular to the axis of the gage is the angle B´ as shown in section AA. The angle actually found by measurement with rolls will be the angle B. However, since the angle of the sides of the dovetail usually is specified on the gage drawing in the plane perpendicular to the axis, it is necessary to compute the angle of value of B' after having measured the value of B. This can be done by means of the formulae shown on figure 268.

f. Use an indicator height gage and gage blocks to measure the dimension L, the distance from the bottom of the roll to the top of the center of the indexing plate.

g. Rotate the indexing plate through an angle equal to 90 degrees plus the half angle of the taper as referred to the original position of the plate.

h. Check the half angle of taper and the angle of the dovetail sides, and the distance from the top of the roll to the top of the center of the indexing plate by the methods previously described.

i. Use the formula shown on figure 267 to determine the distance between the apexes of the gage at its large end. In this figure, t equals the thickness of the gage (see fig. 268), G equals the diameter of the roll used when the dimensions L and K were established, angle C equals the half angle of taper as actually measured,

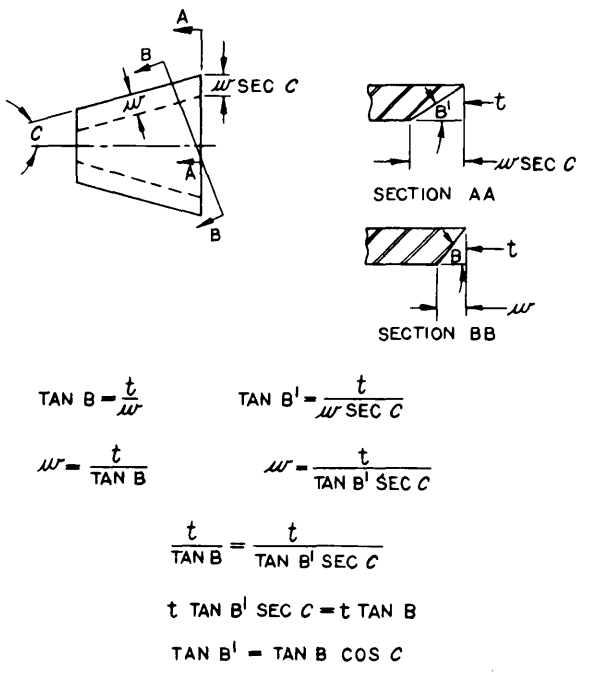

Figure 268. Computing relationship of angles of tapered dovetail gage.

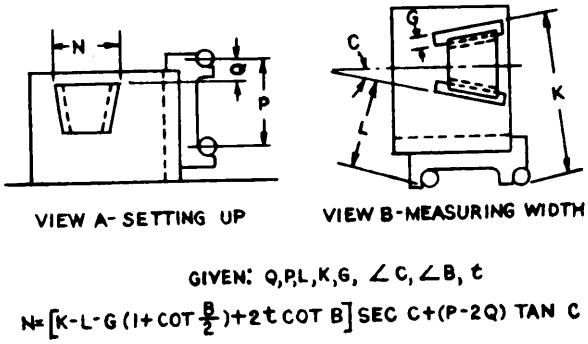

Figure 269. Checking taper dovetail on sine plate.

and angle B is equal to the angle made by the dovetail sides in the plane perpendicular to the sides (see fig. 268).

8.23.4.7 If an indexing plate is not available or if the gage to be inspected is too large for mounting on the indexing plate, a sine plate can be used instead. The steps required to make the inspection of the gage with this device are as follows: As before, check the sides of the gage for flatness.

a. Place an angle iron on its side as shown in view A of figure 269 and clamp the dovetail in position with the large end horizontal. Clamp a sine plate to the angle iron in the position shown.

b. Use an indicator height gage and gage blocks to measure the distance Q, the distance from the end of the dovetail to the center of the upper roll on the sine plate. The dimension P should equal the nominal size of the sine plate.

c. Turn the angle iron at right angles so that it rests on the sine plate as shown in view B of figure 269. Measure the half angle of taper of each side of the dovetail by establishing the sine plate at this angle, and by indicating over rolls placed against each side of the dovetail to see whether they are horizontal. (Do not change the position of the gage on the angle plate). Place blocks under the left side of the plate at the same time blocks are placed under the right, if necessary, to get clearance with the surface plate in checking the lower half angle of the dovetail.

d. While the sides of the dovetail are in a horizontal position, determine the amount of the, dovetail angles by measuring over three different sizes of rolls or by measuring over a roll after gage blocks have been inserted in back of it in a manner similar to that used to measure the angles of a straight dovetail.

e. If the angle of the dovetail is specified on the gage drawing in the plane normal to the axis of the gage, instead of in a plane normal to the sides of the gage, use the formula shown on figure 268 to convert the angle measured as specified in 8.23.4.6 to the corresponding angle in the plane normal to the axis.

f. While the sine plate is set up in the position to make the rolls horizontal measure the distance K, the perpendicular distance from the top of the upper measuring roll to the bottom of the right hand roll of the sine plate. Also measure the distance L, the perpendicular distance from the bottom of the lower measuring roll to the bottom of the left hand roll of the sine plate.

g. Substitute the measurements taken as described above in the formula shown on figure 269 in order to find N, the distance between the apexes of the dovetail at the large end. The angle B is the angle of the dovetail side as measured in the plane perpendicular to the sides (see sec. BB of fig. 268). The term t equals the thickness of the dovetail gage as shown on the same figure.. All other dimensions are shown on figure 269.

8.23.4.8 Tapered dovetail gages can also be checked by measuring over pairs of precision balls. This method takes longer than measurement over rolls, but it is a more thorough check because readings can be taken at several points along the precision surfaces of the gage, thus determining the amount of errors in the straightness of the angle and the taper. The gage to be inspected by this method must have an extremely smooth finish, otherwise, the balls will settle into small depressions and give false readings. The taper is measured by setting the gage in the manner shown on figure 270 and taking measurements over a pair of precision balls which are supported by gage block stacks. The taper in the gage is found by comparing the differences in readings with the differences in heights in the same way that the taper of a plain tapered plug is computed. If the function of the gage is such that the centerline of the half

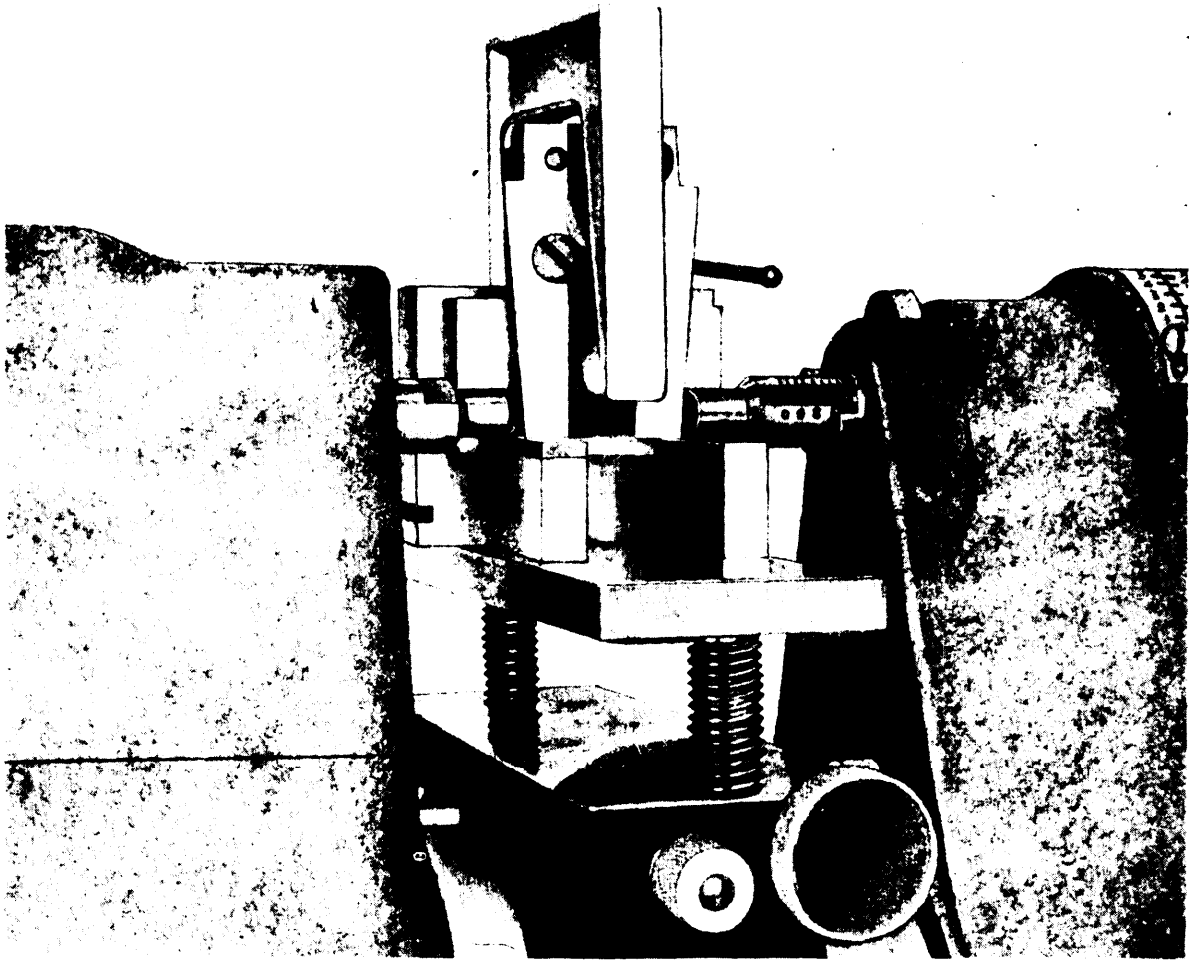

Figure 270. Measuring distance between apexes of tapered dovetail-ball method.

angles of taper must be accurately square with one end of the gage, it may be necessary to check each half angle of taper independently by the methods specified in 8.23.4.7. This is because the included angle of the taper may be correct without having the proper relationship to the ends of the gage. The angle of the dovetail sides is also found by measuring over two balls. Combinations of gage blocks are placed between one of the balls and the angle plate, leaving the other ball in 'the same position for all measurements of one angle (see fig. 271). To measure the angle on the other side of the gage, the gage blocks are moved to this side, keeping stationary the ball which originally was moved. This makes it possible to check each angle independently of the other.

These measurements should be taken in a line parallel with the faces of the dovetail gage, not in a line through the centers of the balls. This can be accomplished by placing the angle plate which supports the gage parallel with the anvils of the measuring instrument and clamping it to the elevating table. The table binder at the base of the elevating table should be loosened in order to permit the assembly to be positioned properly between the anvils. This positioning can be accomplished by pushing the assembly against the movable anvil and by tightening the micrometer thimble until the indicator pointer shows that the proper pressure has been obtained against the opposite anvil. Make sure that base of the elevating table is clean enough to slide freely. The size

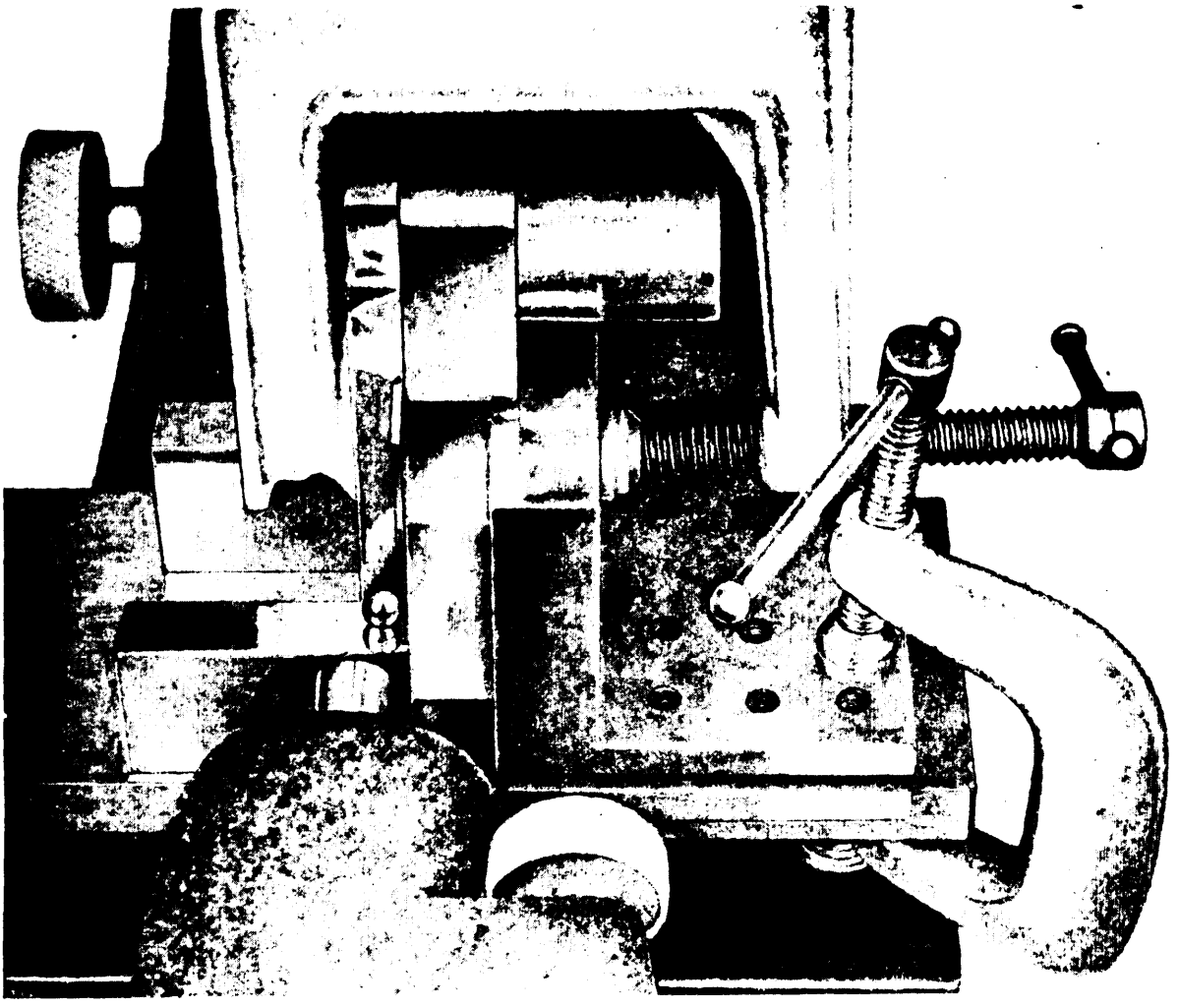

Figure 271. Measuring angles of sides of tapered dovetail-ball method.

of the gage blocks, divided by the increase in the measurement over the balls after the insertion of the blocks, will give the tangent of the angle of the dovetail side. This will be in a plane perpendicular to the axis of the dovetail (see angle B^1 of fig. 268). Having measured the angle of the taper and the angle of the sides, it is possible to compute the distance between the apexes by using the formulae shown on figure 272. The answer obtained by solving the given equation for N will be the distance between the apexes in a plane perpendicular to the ends of the gage and at a height equal to the height of the centerline of the balls where the particular measurement in question was taken.

8.23.5 Spline gages. These gages can be checked by placing them between the centers of a precision indexing head (see fig. 158) or bench centers with sine bar attachment. The following principal operations are performed:

8.23.5.1 Measure the outside diameter of the gage. When there is an even number of splines this can be done by direct measurement with hand micrometers or with a precision measuring instrument. When there is an odd number of splines the gage is inserted between the centers and rotated until a spline is uppermost. The height of the top of this spline is established by means of an indicator height gage and gage blocks. Then the gage is rotated through an arc equal to the width of one spline and the

height of the spline on the bottom of the gage is established by means of the indicator height gage and gage blocks. The difference in these heights will give the measurement of the outside diameter.

8.23.5.2 The gage should be rotated at least a half revolution with an indicator set so as to touch the top of the splines in order to make sure that the splines are concentric with the centers of the gage.

8.23.5.3 Check the minor diameter (the di - ametral distance between the bases of the splines). If there is an even number of splines, this can be done by placing rolls between splines on opposite sides of the gage and taking a direct measurement. The rolls used for this purpose should be small enough so that they will bear on the minor diameter instead of the sides of the spline but large enough to protrude beyond the major diameter. If there is an odd number of splines, or if tolerances are close, this dimension can be measured by means of an indicator height gage and gage blocks in a manner similar to that used to find the outside diameter.

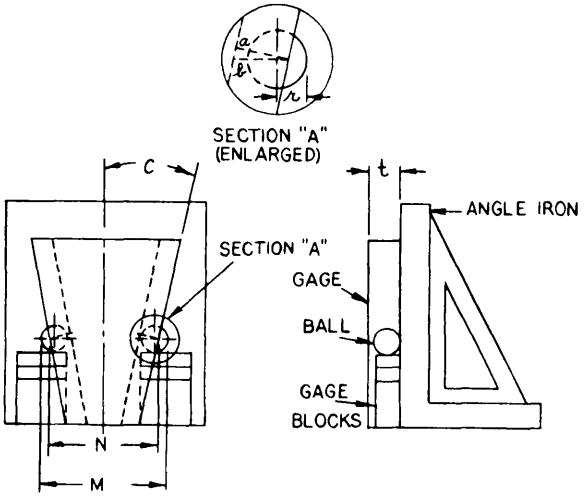

GIVEN:- B = ANGLE BETWEEN DOVETAIL & IRON IN PLANE NORMAL TO SIDES (SEE FIG. 156)
B' = SAME ANGLE IN PLANE OF ENDS
C, M, r, t

$$a = r \cot \frac{B}{2} \qquad b = r \cot \frac{B}{2} \sec C$$

$$M = 2r + 2b + (N - 2t \cot B')$$

$$N = M - 2r\left(1 + \cot \frac{B}{2} \sec C\right) + 2t \cot B'$$

Figure 272. Computing distance between apexes—ball method of measurement.

8.23.5.4 Check the minor diameter for concentricity with the rest of the gage by placing a roll successively in each of the spaces between the splines and noting whether readings remain the same when the gage is rotated under the indicator with the roll held in position against the minor diameter and one of the spline sides.

8.23.5.5 Establish the height of the centerline. This can be done by finding the height of a spline at the top of the gage by means of a height gage, and subtracting one half of the outside diameter as previously measured. Rotate the gage until the splines have the relationship to the centerline which is given on the gage drawing. Usually the drawing will show the centerline passing through the center of a spline. In this case the position of the gage is established by adding gage blocks equal to half the width of a spline to a stack of blocks at the height of the centerline, and by indicating over the blocks and the top side of one spline until they are the same height.

8.23.5.6 Clamp the gage in position with one spline horizontal as determined by the method described in the preceding paragraph. Then observe the angle of the indexing head.

8.23.5.7 Move the indicator back and forth and from side to side on the upper side of the spline to make sure that it is horizontal. Repeat this process on the lower side of the spline and measure the width of the spline by comparing the readings obtained on the upper and lower sides. The width can also be measured directly with micrometers if there is sufficient space and if tolerance permits.

8.23.5.8 If there is an angular tolerance on the position of the splines, rotate the indexing head until the next spline reaches a horizontal position. Note the angular reading. The difference between this reading and the reading obtained in the step specified in 8.23.5.6 will represent the relative angular position of the splines. Repeat this process on each spline.

8.23.5.9 If there is not an angular tolerance on the position of the splines it must be assumed that each spline must be central with its basic centerline within the tolerance applied

on the width of the spline. To make the check in this case, rotate the indexing head through the angle specified on the drawing and then indicate over the sides of the spline to see whether the distances from the basic centerline to the sides of the spline are within tolerance. (The distance from the centerline to each side should be one half of the width of the spline and the tolerance on each individual side will be one half of the tolerance on the width of the spline.)

8.23.6 Spline ring gages. Spline ring gages generally are checked by clamping them on the face plate of an indexing head and using methods similar to those employed on the spline plug gage. However, when it is frequently necessary to check gages to the same drawing in a given laboratory, it is sometimes worth while to make up special fixtures similar to that shown on figure 273. In this figure a sample of the type of gage being checked is shown on the right, while the fixture, with a gage placed in position for inspection, is shown on the left. The principal features of fixtures of this type are a pin of the same size as the bore of the gage for supporting the gage, a horizontal step higher than the centerline by the same amount as the sides of the splines for locating the gage, and a main supporting body with precision ground sides equal in number to the number of the splines for indexing the assembly to the angle specified for the splines. The chief steps employed in inspecting a gage with a fixture of this type are as follows :

8.23.6.1 Points of particular importance in making the general functional check are to make sure that the spline blades cannot be wiggled and to make sure that the dowel pins are a good fit by tapping them lightly.

8.23.6.2 Measure the width of the splines and the spline blades by means of a hand micrometer or a bench micrometer, depending on the tolerance.

8.23.6.3 Mount the spline gage on the fixture and rotate the gage until the height of one spline side is the same as the step on the fixture. Check by running an indicator over both surfaces.

8.23.6.4 Check the angle between the splines by turning the fixture over on another side and by indicating over the side of the spline which is now horizontal. The side of the spline should be parallel as well as at the proper height. Care should be taken not to disturb the gage from its position on the fixture during this operation.

8.23.6.5 Rotate the fixture so that the third spline is horizontal and check as before.

8.23.6.6 Check the centrality of the splines with respect to the blades by setting a planer gage or a stack of gage blocks at the height of the spline sides. Then place a stack of gage blocks on the planer gage or on the first stack of gage blocks and indicate over the top of the blocks and sides of the blade. The height of the second stack of blocks must equal the difference between the distances of the blade side and the spline side from the centerline. Each of the blade sides is checked in succession by rotating the fixture to each of its three sides. During this check it is important to check the blade sides for parallelism of the entire surface, as well as proper position. It might not be considered necessary to have the splines central and the sides of the blades parallel as long as the splines themselves are correct and the blades are a good fit in the body of the gage. However, it is desirable to have the blades conform exactly to specifications in order to make replacement possible when the gage has become worn.

8.23.6.7 Check the lower sides of the splines and the blades for parallelism by methods similar to those used for the top sides.

8.23.6.8 Determine the height of the centerline by subtracting half the width of the splines from the height of the horizontal step on the fixture. Subtract from this the radius specified on the drawing for the distance from the centerline to the tops of the splines, and set the height gage to zero at this point. Rotate the gage until one spline is under the pin in a vertical position. Indicate over the spline and note any variation in the position of the top of the spline from basic. When a gage of this type is being checked on the face plate of an indexing head, the radius to the tops of the splines can be checked just as easily by placing each spline in a vertical position over the cen-

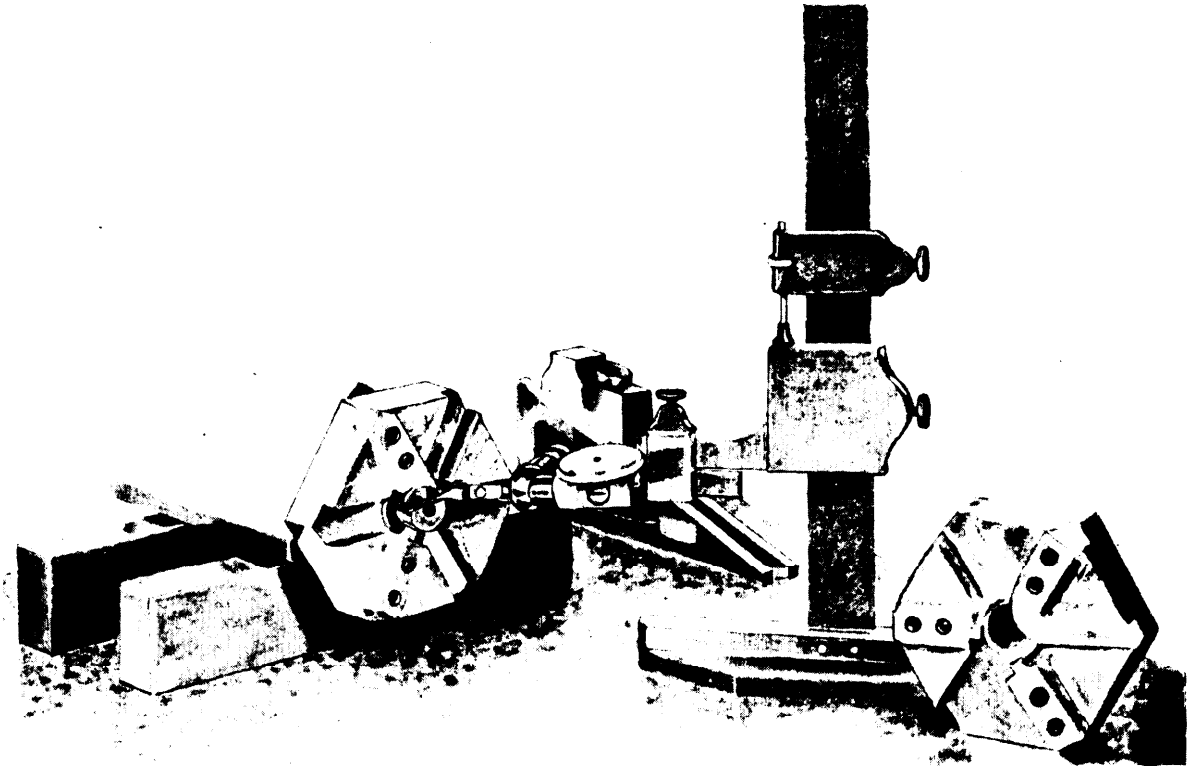

Figure 273. Checking spline ring gage.

terline. However, the spline must be placed under the centerline when the fixture is used because the spline will always bear on the pin when it is in the upper position.

8.23.6.9 Check the distance from the centerline to the base of each spline by methods similar to that used to determine the distance from the radius to the top of the spline. If the tolerance on the position of the surface at the base of the spline is not very close, this distance can be determined by measuring from the top of the spline to the base with a scale or with a micrometer depth gage. Check the central hole in the gage with check plugs or with a precision internal measuring device.

8.23.7 Tapered spline gages. Tapered spline gages are checked by clamping them to the face plate of an indexing or dividing plate which is small enough to be set up on a sine plate. The assembly is set up on an angle equal to the half angle on the taper and an indicator height gage is passed over the tapered surfaces to see whether they are horizontal. In other respects these gages are checked like ordinary spline gages.

8.23.8 Large gages. The particular point to watch for in inspecting large gages is to make sure that the gage is set up for inspection in such a way that it will not be sprung out of shape due to the pressure of the clamps or due to the effect of its own weight. Trouble of this sort often can be avoided by placing blocks or small parallels between the gage and the supporting surface at points where it is clamped, and by supporting long gages at both ends and at the center by parallels.

8.23.8.1 Another difficulty commonly found in inspecting large gages is that these gages cannot be mounted on an angle iron. This makes it difficult to turn the gage through right angles.

8.23.8.2 A typical case of this sort is the location ring gage shown on figure 274. This gage is checked by clamping it in a vertical position and inserting check plugs in the ring bushings. The position of the gage is adjusted until the

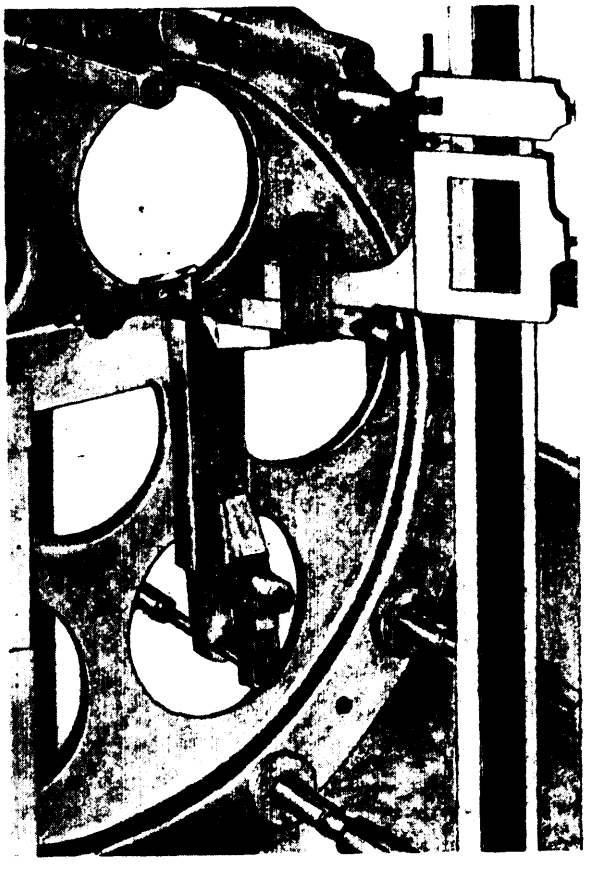

Figure 274. Checking large locating ring gage.

corresponding check plugs on opposite sides of the gage are the same height. The differences in heights of check plugs in the same vertical alinement then are measured by means of an indicator height gage, and these measurements are compared with the chordal dimensions between the centers of the rings as given in the gage drawing. The gage then is rotated through 90 degrees and the chordal dimensions running at right angles to the first dimensions are checked in the same way.

8.23.8.3 The problem of rotating the gage through exactly 90 degrees is solved by clamping a precision square on the gage as shown on figure 274. An indicator is run along one edge of the square and the position of the square is adjusted until this surface is horizontal. After this, the square is tightened securely in position. The location ring gage then is loosened and turned until the other surface of the square is horizontal. The gage is then tightened into place in a new position which is exactly 90 degrees from its former position.

8.23.8.4 In order to inspect a point gage in excess of 80.0 inches a specially constructed **I** beam 200.0 inches long is used. The top surface is scraped, the beam specially heat treated, and the edge of the top surface is also scraped at right angles to the top to permit alinement of the **"V"** blocks in which the point gage rests. Two precision angle plates are also used in conjunction with the beam as stops, permitting a maximum length of 192.0 inches to be utilized. The first step in checking a point gage of 100.0 inches would be to locate one angle plate by clamping it securely to face of beam and placing two master length gages, one 60.0 inches long and one 40.0 inches long against the angle plate now in place. The second angle plate can be located by inserting a 1.0 inch precision block between the master length gages and the angle plate. Secure second plate. Placing the 100.0 inches point gage in place and using precision blocks, its exact length is determined by the variation of the original 1.0 inch dimension.

8.23.9 Cams. When cams on a gage are used only for functional purposes such as holding the work in position, it generally is sufficient to check their extreme angular positions and noting the rise with a rule.

8.23.9.1 A cam with a slow rise can be measured accurately by placing it on a horizontal indexing plate, as shown on figure 275. This face plate of indexing head must be adjusted accurately parallel to the surface plate on which the height gage is resting.

8.23.9.2 The cam on the indexing head is then centered by indicating on some precision cylindrical surface, and adjusting the position of the cam until the indicator reading remains constant. The surface of the internal diameter usually is used for this purpose.

8.23.92 The cam surface is inspected by placing the gaging tip of an indicator over the exact center of the cam by indicating over the top of a precision ball until the maximum height is found. When the cam is mounted on a shaft, the ball is rested in the center at the end of the shaft. When the cam is hollow, it may be necessary to insert a mandrel and place the ball in

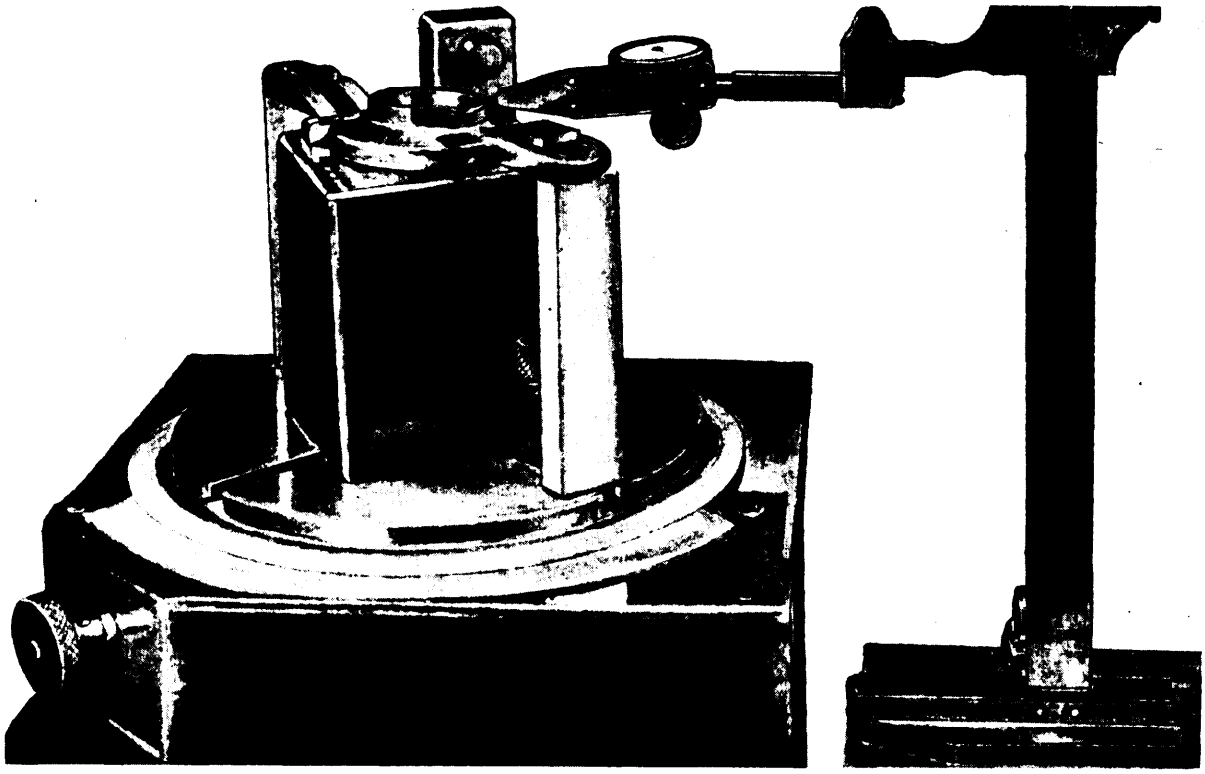

Figure 275. Checking a cam.

the center at the end of the mandrel.

8.23.9.4 Having located the indicator at the center of the cam, a parallel is clamped in position against a side of the height gage base. Whenever the indicator is moved, the base of the height gage is kept snug against this parallel. By this arrangement all measurements are taken on a line through the center of the cam, even though the height gage is moved to and fro in making the measurements.

8.23.9.5 The cam profile is measured by determining the height of any convenient point on the cam surface with an indicator height gage and gage blocks. The indexing plate is rotated through any convenient but accurately established angular distance and the height of the cam surface is measured again. The difference in heights equals the rise for the angle in question. The indicator should be moved across the entire width of the cam surface to determine the perpendicularity with the axis of the cam.

8.24 CHECKING GAGES FOR WEAR. The checker should be thoroughly familiar with the use of gages which are checked for wear. All general rules and practices for reinspecting gages are subject to exceptions because of considerations of component design and function. Gages should never be permitted to wear to a point where the interchangeability or the effectiveness of the component is endangered. In general, gages which have been designed with a wear allowance are permitted to wear to the size of the component limit. Gages which do not have a wear allowance and are not adjustable are usually allowed to wear 5 percent of the total component tolerance, or 0.0001 inch, whichever is greater, beyond the component limit. This practice must not be followed if the component dimension is critical. If this condition exists, the gage must not be used after it has worn beyond the component limit even if the gage has to be discarded after only brief use.

8.24.1 Plain plug gages. Plain "Go" plug gages are measured for wear in two different ways, depending on their use. Those which

are used for through holes only are measured at a point ⅓ of the length of the gaging member from the entering end of the plug. Plugs for general use and specifically those for blind holes are to be measured at a point ⅛ inch from the entering end of the gage. If the plug is to be used on a specific blind hole where the diameter must be strictly within limits at a distance less than ⅛ inch from the bottom of the hole, the measurement must be taken, of course, at a distance which will assure proper inspection at the prescribed depth.

824.1.1 The diameter of the plug, as measured at the points specified in 8.24.1, should not be less than the minimum limit of the component diameter.

824.1.2 "Not Go" plain plug gages are measured for wear at a point 1/32 inch from the entering end of the gage. The gage is permitted to wear below the gage maker's limits by an amount equal to the gage maker's tolerance unless this permits an unusual number of component rejections. When component tolerances are close, front taper in a "Not Go" plug should not be permitted because of the frequency with which the plug will become jammed in the component.

8.24.2 Plain ring gages. Plain ring gages are also measured for wear at different points, depending upon their use. When the component can be dropped completely through the ring gage, the check for wear is made at points ⅙ of the width of the gage from each end. Gages which come up against a shoulder or which are issued for general use are measured for wear at points ⅛ inch in from each of the faces of the ring. If the portion of the component on which the diameter must be closely controlled is closer to the shoulder than ⅛ inch, the measurement for wear must be taken at a point that distance away from the end of the gage.

8.24.2.1 Plain "Go" ring gages should not be allowed to wear beyond the maximum component limit.

8.24.2.2 Plain "Not Go" ring gages are measured for wear at points 1/32-inch from each of the ends of the gage. The diameter may wear beyond the maximum gage maker's limit by an amount equal to the gage maker's tolerance.

8.24.3 Thread plug gages. Generally, thread gages need be checked for wear only on the pitch diameter because the major diameter does not wear as rapidly as the pitch diameter. The pitch diameter generally is beyond the limits if the thread angle or lead has worn sufficiently to be beyond their limits.

8.24.3.1 To measure a thread plug gage for wear, place a thread measuring wire of the proper size between the thread flanks at a point two full thread turns from the entering end. The other two wires are placed on the other side of the plug, one a half turn above and the other a half turn below the single wire in the usual fashion.

8.24.3.2 The pitch diameter of the "Go" gage is permitted to wear undersize by an amount equal to 5 percent of the pitch diameter tolerance prescribed for the component threads. If the component tolerance is less than 0.002 inch, the pitch diameter of the thread plug gage is permitted to wear below the minimum gage maker's limit by 0.0001 inch.

8.24.3.3 "Not Go" thread plugs may wear below the minimum gage maker's limit by an amount equal to the gage maker's tolerance.

8.24.4 Thread ring gages. Since the flanks of a thread ring gage wear more rapidly near the pitch line than near the major diameter, a plug with truncated thread crests should be used as a means of inspecting for wear. The major diameter should be about halfway between the pitch diameter and the major diameter of the ordinary setting plug. A full form setting plug will bear on the thread flanks of a worn ring near the major diameter indicating a good fit even though the thread ring is badly worn near the pitch line. The truncated plug, on the other hand, will fit loosely in the ring if the ring has been badly worn near the pitch line.

8.24.4.1 The truncated plug is used by entering it in the thread ring two full thread turns on each side of the ring. If there is any appreciable shake on either side of the ring, the ring is no longer satisfactory. If the ring gage is adjustable, it should be readjusted to a good fit on a full form set plug before the truncated plug is used.

8.24.4.2 If a truncated plug is not available, the wear of the thread ring can be estimated by making a cast of the threads (detailed instructions on methods of making casts will be found in 8.12.1). The cast is placed in a contour projector and the image of the most badly worn portion of the thread flanks alined with the "V" formed by the 30-degree lines on the projection screen. The distance between the worn and unworn portions of the flank should not exceed three-quarters of the gage maker's tolerance on the pitch diameter if the thread ring is to be considered satisfactory for further use.

8.24.5 Thread concentricity gages. The plain diameters of these gages are measured at a point ⅛ inch from the beginning of the plain section and the pitch diameters of the threads are measured two full threads from the beginning of the threaded section.

8.24.6 Snap gages. The flatness and parallelism of the anvils of snap gages should be such that the perpendicular distance between the anvils at any point on their surfaces is neither greater than nor less than the limits of the gage maker's tolerance.

8.24.6.1 The flatness of the anvils can be checked by means of an optical flat (for methods see 8.5.4). If moderate errors in flatness are permissible this check can be made with a knife-edge straightedge or a test indicator. Parallelism can be checked by placing gage blocks or precision rolls in various positions between the anvils.

8.24.7 Indicator gages. Check the dial indicator itself in accordance with the instructions given in 8.23.1. If conditions are such that a thorough check is not considered necessary, test the indicator for sticking and calibrate a few points by placing different combinations of gage blocks in the gaging position and noting whether or not the indicator readings correspond to the size of the blocks. Loosen the screw which holds the indicator and shift its position slightly to prevent excessive wear in one section of the indicator gear rack. In rechecking an indicator gage, be sure that wear has not occurred in such a way that a discrepancy exists between the dimension for which the gage is set and the dimension which the gage actually measures. This generally occurs when the indicator is set with gage blocks instead of setting gages of the same form as the component. For example, a small component may wear a hollow in the large anvil of an indicator gage. When gage blocks are used for setting, they may bridge the hollow, whereas the component rests in the hollow, thus permitting the acceptance of oversize components and the rejection of satisfactory components which appear to be near the minimum limit. This situation arises when the gaging members are rounded and gage blocks are used for setting. If a flat is worn on the radius of the gaging members the indicator will be set to this flat, whereas the component may rest on the radius, thereby causing a false reading.

8.24.8 Flush pin gages. Flush pins should move freely at all times. If they do not, take the gage apart and clean it. In general, the gage is satisfactory if the total shake of the flush pin is not more than 0.0005 inch. Under ordinary circumstances, the end of the flush pin which contacts the component is permitted to wear until the feeler surface of the pin is 0.0002 inch lower than the point originally specified by the gage maker's limits. In checking the position of the pin by means of gage blocks it should be noted whether the setting obtained in this way coincides with the true measurement or whether worn spots cause a false reading similar to that previously described for indicator gages.

8.24.9 Fixture gages. All moving parts should move freely but without shake or play sufficient to interfere with the proper functioning of the gage, and all supporting members are to be checked for misalinement due to wear. All gaging members are to be checked to see whether their form is still sufficiently accurate to permit proper gaging. Flush pins and indicaters must conform to the requirements previously described for these gages.

8.25 CALIBRATING THREAD MEASURING WIRES. It is essential that all thread measuring wires be calibrated by the laboratory or by the Bureau of Standards before their initial use. They should also be recalibrated frequently because thread wires make virtually point contact with threads during measurement and their positioning is subject to a wedging action. Therefore, slight irregularities on the surfaces of the wires can easily cause errors which exceed the desired accuracy of measurement.

8.25.1 Thread measuring wires should preferably be calibrated on a comparator or measuring machine which reads directly to 0.00001 inch, and which can be adjusted to measure with either 1- or 2½-pounds pressure. The pressure selected for any given wire should be the same as the pressure under which the wire is to be used.

8.25.2 The diameter of a thread measuring wire is measure by placing the wire on a precision lapped, hardened steel plug 0.750 inch in diameter between the anvils of the measuring machine. Measurements are taken with one side of the wire bearing on the anvil and the other bearing on the plug. A set of three wires should have the same diameter within 0.00002 inch, and this common diameter should be within 0.0001 inch of that corresponding to the best size wire for the thread on which the wire is to be used. Each wire should be measured at several positions around the circumference of the wire over a ½ inch length near the center of the wire to be sure that the diameter is within the limits over that entire portion.

8.25.3 The roundness of the wires must also be checked by resting each wire in a "V" groove of a round object of hardened and lapped steel. When the wire is rotated and measured at various points about its circumference, the variations in the measurements over the wires should not exceed 0.00002 inch. Special plugs with a flat on one side and thread grooves of various depths on the other are available for this purpose. However, if such a plug is not on hand, a hardened and lapped thread plug gage will serve, provided the thread flanks are known to be accurately straight.

8.25.4 The wires should also be checked for straightness by rolling them along a tool maker's flat and noting whether any light passes between the wire and the flat. A slight amount of bend in wires for fine pitches, say 32 pitch and finer, is not objectionable because the measuring pressure will straighten them if the concave side is placed against the anvil of a bench micrometer. However, there should be no bend whatsoever in wires for the coarse pitches. Kinks or sharp bends should not be present in fine pitch wires even though these imperfections may appear to be very slight when inspected visually.

8.26 CALIBRATING GAGE BLOCKS. It is difficult to determine the length of time gage blocks should be used before recalibration because some sets of gage blocks may be used much more than others. Each laboratory should occasionally check its own gage blocks roughly in order to decide whether they should be returned for calibration. Precision gage blocks should be inspected at least every 6 months, even when they are not used.

8.26.1 The following suggestions will be helpful in reinspecting used gage blocks, or in checking new blocks:

a. Clean the blocks by washing in Stoddard solvent (Varsol). Avoid so far as possible the use of benzol or carbon tetrachloride because of their toxicity.

b. Stone the gaging surfaces of the blocks with a hard Arkansas stone until all burrs have been removed, and then wipe clean with a chamois or a cloth which leaves no lint. Special large flat stones are available commercially for the removal of burrs. Blocks can be checked for presence of burrs with an optical flat or by gently attempting to wring them to another block.

c. Check for flatness by placing an optical flat on the gaging surfaces and noting the curvature of the interference bands. The displacement of a band from the point of greatest curvature to a point $\frac{1}{16}$ inch in from the edge of the blocks, in terms of band widths, multiplied by 11.6, is the error in flatness in millionths of an inch. (See 8.5.4 for full details.) This test should be made both along and across each block.

d. Check for parallelism by wringing the block and a master block side by side on an optical flat. Place a second optical flat on top of the two blocks and adjust its position so that the bands on the master block have no error in parallelism across its width. Compensation for any error in parallelism of the master block is made by appropriate orientation of its fringes. If for example the master block shown on figure 276 had an error in parallelism of 0.000005 inch its fringe pattern would have to be rotated 0.4 of a band. The direction of rotation depends on the location of the contact between the top flat and the blocks. If it is at the bottom as shown on figure 276 the bands have to be rotated clockwise. (See fig. 276 for an actual photograph of this set-up.) The bands on the master block are brought into the desired position by pressing on the upper optical flat with the fingers and by shifting its position horizontally until it is balanced at a point which produces the desired interference pattern. The angle of the interference bands on the block being inspected then indicates the error in the parallelism of this block. On figure 276 the block being inspected is the one on the right. Since the interference bands on this block are horizontal within approximately one third of the band width, it can be assumed that the faces are parallel within about 4 millionths of an inch. Assuming that the upper flat is bearing on the front edges of the blocks the pattern indicates that the left side of the block being inspected is lower than the right side. On figure 277, the length of the block being inspected is about 6 millionths of an inch less at the outside edge than at the edge near the master block (assuming that the optical flat is bearing on the front edges of the blocks). This test should be repeated with the optical flat placed so as to make the interference bands accurately vertical on the master block. On figure 278, the length of the block being inspected is about 12 millionths of an inch less near the lower edge than it is near the top (assuming that the flat is bearing on the right-hand edges of the blocks) and no error in parallelism exists on the master block.

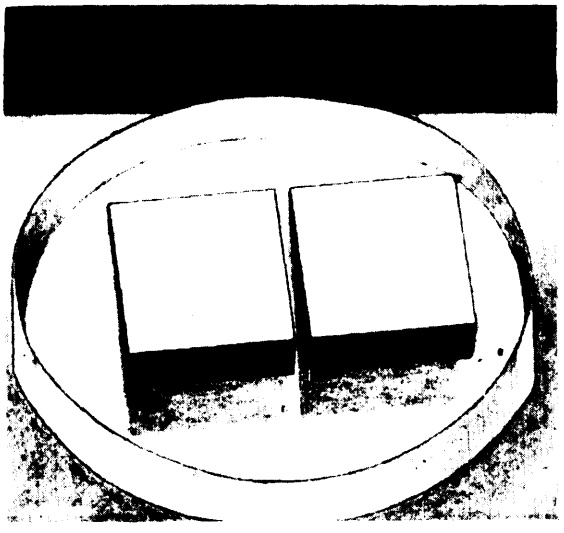

Figure 276. Set-up for checking parallelism of gage blocks.

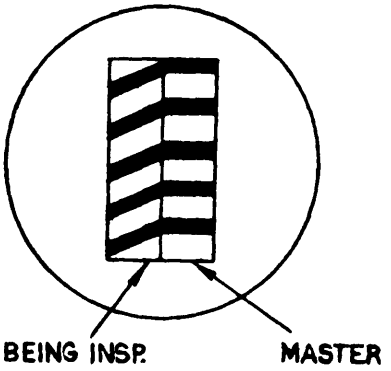

Figure 277. Horizontal check for gage block parallelism.

e. Check the length of the blocks in a comparator to an accuracy of 0.000005 inch or better.

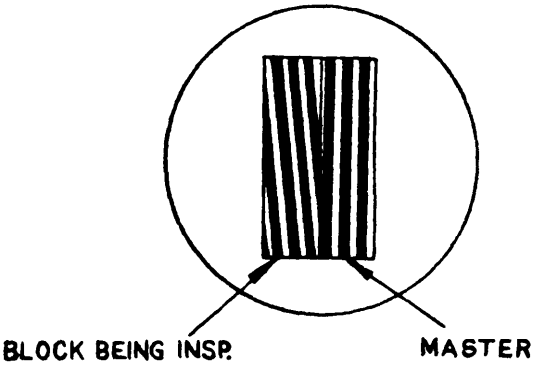

Figure 278. Vertical check for gage block parallelism.

f. Since considerable experience is required to use optical flats properly for precision measurement of length, and since a certain amount of error is necessarily introduced when an optical flat is used without an interferometer, it is best to check the length of gage blocks with a high magnification comparator. However, if an instrument of this type is not available, or if the inspector desires to experiment with optical flats, the following method should be used:

Wring the block being inspected and a master block of the same nominal length end to end on an optical flat, as shown on figure 279. Place another flat on top of the blocks and adjust its position until a minimum number of vertical interference bands is produced. This upper flat should be placed symmetrically with respect to the blocks, so that it has no tendency to tilt. Heavy pressure should not be used in the adjustment.

g. Place set-up out near the edge of the monochomatic light source and view the interference bands from a position as nearly vertical as possible. Count the number of dark bands on the master block. Fractions of a band (the distance between the centers of the dark bands) at the end should be included in the count. On figure 279 the band count is approximately 2–½. If the flat is bearing on the left edge of the blocks, the block being inspected is between 23 and 35 millionths of an inch lower than the master block and if it is bearing at the right end the block is the shine amount higher. Having determined the approximate difference between the lengths of the blocks by means of a precision measuring instrument or as described above, a more exact comparison can be made with the set-up shown on figure 280. The two blocks are wrung on an optical flat side by side with the marking uppermost, and a second flat is again placed on top of them. The upper flat is tilted enough to give a few horizontal interference bands as if flatness were being checked. Since we previously determined that there is between two and three bands difference between the two blocks, we know that any given band on the block being inspected is displaced between two and three band widths from the band on the master block of the same order of interference. If we select a band through the center of the unknown block the corresponding band on the master block is between two and three bands away in a direction determined by the location of the point where the top flat bears on the blocks. On figure 280 the point of contact is at the bottom and the band on the master block corresponding to one on the unknown block is between two and three bands above it. The exact difference in length is determined by counting the whole and fractional bands between the corresponding bands and multiplying by 11.6 millionths of an inch. In the figure the difference is 2.3 bands or 27 millionths of an inch. Since it is the practice of the Ordnance Corps to measure the length of blocks near the center, the fringe count should be made between a band at this point on the unknown block and the corresponding fringe on the master block.

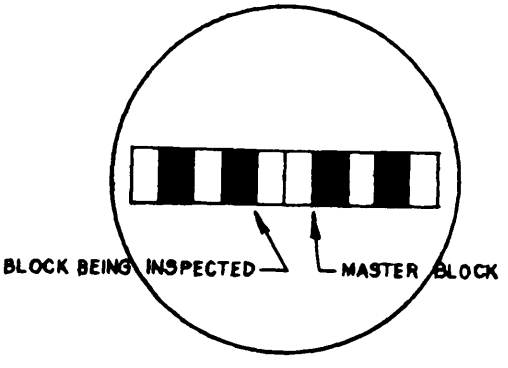

Figure 279. Rough check of difference in length of two gage blocks.

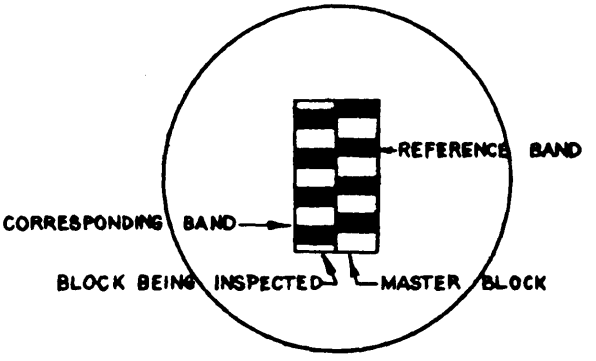

Figure 280. Check of difference in length of two gage blocks.

8.26.2 "A" precision gage blocks.

8.26.2.1 Reference point. The measured length is in each case the perpendicular distance from one gaging surface to a point on the other gaging surface near the middle of and about 1/16 inch from the edge to the right of or nearest to the size marking.

8.26.2.2 Length. The tolerance on length is ±0.000004 inch for blocks up to 1 inch in length and ±0.000004 inch per inch of length for longer blocks. On blocks within ±0.000004 inch of the nominal size, or ±0.000004 inch per inch, observational errors of ±0.000004 inch on blocks up to 1 inch in length, and of ±0.000004 inch per inch of lengths on longer blocks are possible in the measurements of length. On blocks differing from the nominal size by more than the above amounts, additional measurements are made and the observational error is ±0.000003 inch. For blocks having flatness errors exceeding 0.000010 inch, the observational error is indefinite. These possible observational errors are taken into account in determining acceptability of blocks. Gage blocks should be accepted as of "A" quality if deviation from nominal length is within the following limits:

1 inch or less	±0.000007
over 1 to 2 inches, inch	±0.000014
over 2 to 3 inches, inch	±0.000020
over 3 to 4 inches, inch	±0.000025

8.26.2.3 Parallelism. The error in parallelism indicates the correction to be applied to the measured length to obtain the length at a point about 1/16 inch in from the opposite edge. The error in parallelism is not reported if it does not exceed ±0.000002 inch. Gage blocks should be accepted as of "A" quality if the error in parallelism does not exceed ±0.000008 inch, or if the algebraic sum of the length and parallelism errors does not exceed the above limits for deviation from nominal length.

8.26.2.4 Flatness. The errors in flatness along the length and across the width are measured along lines midway between the edges, but do not include the 1/16 inch of surface nearest the edges. Flatness errors indicated by the letter "a" are measured along a line 1/16 inch from an edge with respect to the centerline. The flatness of gages less than 0.100 inch in length is measured when the gages are wrung down on an optical flat. The errors in flatness are not reported if they do not exceed 0.000002 inch across the width and 0.000003 inch along the length. Gage blocks should be accepted as of "A" quality if the flatness error does not exceed 0.000006 inch across the width or 0.000008 inch along the length.

8.26.3 "B" precision gage blocks, or used gage blocks.

8.26.3.1 Reference point. The measured length is in each case the perpendicular distance from one gaging surface to a point on the other gaging surface near the middle of and about 1/16 inch from the edge to the right of or nearest to the size marking.

8.26.3.2 Length. The tolerance on length is ±0.000008 inch for blocks up to 1 inch in length, and ±0.000008 inch per inch of length for longer blocks. On blocks within ±0.000008 inch of the nominal size, or ±0.000008 inch per inch, observational errors of ±0.000005 inch on blocks up to 1 inch in length, and of ±0.000005 inch per inch of length on longer blocks are possible in the measurements of length. On blocks differing from the nominal size by more than the above amounts, additional measurements are made and the observational error is ±0.000003 inch. For blocks having flatness errors exceeding 0.000010 inch, the observational error is indefinite. These possible observational errors are taken into account in determining acceptability of blocks. Gage blocks should be accepted as of "B" quality if deviation from nominal length is within the following limits:

1 inch or less	± 0.000011
Over 1 to 2 inches, inch	± 0.000020
Over 2 to 3 inches, inch	± 0.000028
Over 3 to 4 inches, inch	± 0.000035

8.26.3.3 Parallelism. The error in parallelism indicates the correction to be applied to the measured length to obtain the length at a point about 1/16 inch in from the opposite edge. The error in parallelism is not reported if it does not exceed ±0.000005 inch. Gage blocks

should be accepted as of "B" quality if the error in parallelism does not exceed ±0.000010 inch, or if the algebraic sum of the length and parallelism errors does not exceed the above limits for deviation from nominal length.

8.26.3.4 Flatness. The errors in flatness along the length and across the width are measured along lines midway between the edges, but do not include the 1/16 inch of surface nearest the edges. Flatness errors indicated by the letter "a" are measured along a line 1/16 inch from an edge with respect to the centerline. The flatness of gages less than 0.100 inch in length is measured when the gages are wrung down on an optical flat. The errors in flatness are not reported if they do not exceed 0.000005 inch. Gage blocks should be accepted as of "B" quality if the flatness error does not exceed 0.000008 inch across the width or 0.000010 inch along the length.

8.27 HELIX ANGLES

8.27.1 American National coarse and fine thread series are shown in tables II and III, respectively.

TABLE II. AMERICAN NATIONAL COARSE Thread Series

Sizes	Threads per inch	Helix angle at basic pitch diameter		Sizes	Threads per inch	Helix angle at basic pitch diameter	
		Deg.	*Min.*			*Deg.*	*Min.*
1	64	4	31	⅞	9	2	31
2	56	4	22	1	8	2	29
3	48	4	26	1⅛	7	2	31
4	40	4	45	1¼	7	2	15
5	40	4	11	1⅜	6	2	24
6	32	4	50	1½	6	2	11
8	32	3	58	1¾	5	2	15
10	24	4	39	2	4½	2	11
12	24	4	1	2¼	4½	1	55
¼	20	4	11	2½	4	1	57
5/16	18	3	40	2¾	4	1	46
⅜	13	3	24	3	4	1	36
7/16	14	3	20	3¼	4	1	29
½	13	3	7	3½	4	1	22
9/16	12	2	59	3¾	4	1	16
⅝	11	2	56	4	4	1	11
¾	10	2	40				

8.27.2 Chart for determining helix angles. A chart showing graphically the relationships of diameters, leads and helix angles of screw threads is shown on figure 281. If the values

TABLE III. AMERICAN NATIONAL FINE THREAD SERIES

Sizes	Threads per inch	Helix angle at basic pitch diameter		Sizes	Threads per inch	Helix angle at basic pitch diameter	
		Deg.	*Min.*			*Deg.*	*Min.*
0	80	4	23	⅜	24	2	11
1	72	3	57	7/16	20	2	15
2	64	3	45	½	20	1	57
3	56	3	43	9/16	18	1	55
4	48	3	51	⅝	18	1	43
5	44	3	45	¾	16	1	36
6	40	3	44	⅞	14	1	34
8	36	3	28	1	14	1	22
10	32	3	21	1⅛	12	1	25
12	28	3	22	1¼	12	1	16
¼	28	2	52	1⅜	12	1	9
5/16	24	2	40	1½	12	1	3

of any two of these dimensions are known, the value of the third can be found by means of the chart. The horizontal lines represent the pitch diameter in inches. The values of these lines may be read in the columns either at the extreme left or the extreme right of the chart. The vertical lines represent the lead. The values may be read at the top of the chart if the lead is known in inches, or at the bottom of the chart if the number of thread turns per inch is known. The diagonal lines represent the helix angles. The values of these lines can be determined from the columns of figures at the left, at the center, or at the right of the chart.

Example: To determine the helix angle of a l/2-20NF–2 screw thread: The basic pitch diameter is 0.4675 inch. Find the point representing the value 0.4675 on the diameter scale at the left of the chart and follow a horizontal line to the right of this point until the vertical line representing 20 thread turns per inch is found. From this intersection follow a line parallel to the diagonals until the scale representing the values of the helix angle is intersected. The helix angle line directly below the plotted line represents a value of 2 degrees O minutes. Therefore, the actual value of the helix angle in question is found by interpolation to be 1 degree 57 minutes.

8.27.3 Thread flank angle correction factors are shown in tables IV and V.

TABLE IV. 60 DEGREE INCLUDED THREAD ANGLE

Helix angle	Correction	Helix angle	Correction
2°	0′-54″	8°-40′	17′-2″
2°-10′	1′-4″	8°-50′	17′-42″
2°-20′	1′-14″	9°	18′-23″
2°-30′	1′-24″	9°-10′	19′-4″
2°-40′	1′-36″	9°-20′	19′-46″
2°-50′	1′-48″	9°-30′	20′-29″
3°	2′-2″	9°-40′	21′-12″
3°-10′	2′-16″	9°-50′	21′-57″
3°-20′	2′-31″	10°	22′-42″
3°-30′	2′-47″	10°-10′	23′-28″
3°-40′	3′-4″	10°-20′	24′-15″
3°-50′	3′-21″	10°-30′	25′-2″
4°	3′-38″	10°-40′	25′-50″
4°-10′	3′-56″	10°-50′	26′-38″
4°-20′	4′-16″	11°	27′-28″
4°-30′	4′-35″	11°-10′	28′-19″
4°-40′	4′-56″	11°-20′	29′-11″
4°-50′	5′-18″	11°-30′	30′-2″
5°	5′-40″	11°-40′	30′-55″
5°-10′	6′-2″	11°-50′	31′-47″
5°-20′	6′-27″	12°	32′-42″
5°-30′	6′-51″	12°-10′	33′-37″
5°-40′	7′-17″	12°-20′	34′-33″
5°-50′	7′-43″	12°-30′	35′-29″
6°	8′-10″	12°-40′	36′-27″
6°-10′	8′-37″	12°-50′	37′-25″
6°-20′	9′-5″	13°	38′-23″
6°-30′	9′-35″	13°-10′	39′-23″
6°-40′	10′-5″	13°-20′	40′-25″
6°-50′	10′-35″	13°-30′	41′-25″
7°	11′-6″	13°-40′	42′-26″
7°-10′	11′-38″	13°-50′	43′-30″
7°-20′	12′-11″	14°	44′-33″
7°-30′	12′-46″	14°-10′	45′-37″
7°-40′	13′-20″	14°-20′	46′-42″
7°-50′	13′-55″	14°-30′	47′-47″
8°	14′-31″	14°-40′	48′-55″
8°-10′	15′-8″	14°-50′	50′-2″
8°-20′	15′-46″	15°	51′-10″
8°-30′	16′-24″		

TABLE V. 29 DEGREE INCLUDED THREAD ANGLE

Helix angle	Correction	Helix angle	Correction
2°	0′-30″	8°-40′	9′-31″
2°-10′	0′-37″	8°-50′	9′-54″
2°-20′	0′-43″	9°	10′-18″
2°-30′	0′-48″	9°-10′	10′-39″
2°-40′	0′-53″	9°-20′	11′-4″
2°-50′	1′-2″	9°-30′	11′-27″
3°	1′-8″	9°-40′	11′-50″
3°-10′	1′-17″	9°-50′	12′-16″
3°-20′	1′-25″	10°	12′-41″
3°-30′	1′-35″	10°-10′	13′-6″
3°-40′	1′-43″	10°-20′	13′-33″
3°-50′	1′-52″	10°-30′	14′-0″
4°	2′-2″	10°-40′	14′-26″
4°-10′	2′-12″	10°-50′	14′-53″
4°-20′	2′-24″	11°	15′-19″
4°-30′	2′-35″	11°-10′	15′-48″
4°-40′	2′-47″	11°-20′	16′-18″
4°-50′	2′-58″	11°-30′	16′-47″
5°	3′-12″	11°-40′	17′-16″
5°-10′	3′-24″	11°-50′	17′-45″
5°-20′	3′-37″	12°	18′-14″
5°-30′	3′-50″	12°-10′	18′-45″
5°-40′	4′-6″	12°-20′	19′-16″
5°-50′	4′-19″	12°-30′	19′-47″
6°	4′-35″	12°-40′	20′-19″
6°-10′	4′-50″	12°-50′	20′-50″
6°-20′	5′-6″	13°	21′-24″
6°-30′	5′-24″	13°-10′	21′-56″
6°-40′	5′-39″	13°-20′	22′-29″
6°-50′	5′-56″	13°-30′	23′-4″
7°	6′-14″	13°-40′	23′-37″
7°-10′	6′-31″	13°-50′	24′-12″
7°-20′	6′-50″	14°	24′-47″
7°-30′	7′-8″	14°-10′	25′-24″
7°-40′	7′-29″	14°-20′	25′-58″
7°-50′	7′-47″	14°-30′	26′-35″
8°	8′-8″	14°-40′	27′-12″
8°-10′	8′-29″	14°-50′	27′-50″
8°-20′	8′-48″	15°	28′-27″
8°-30′	9′-10″		

922173 O - 51 - 14

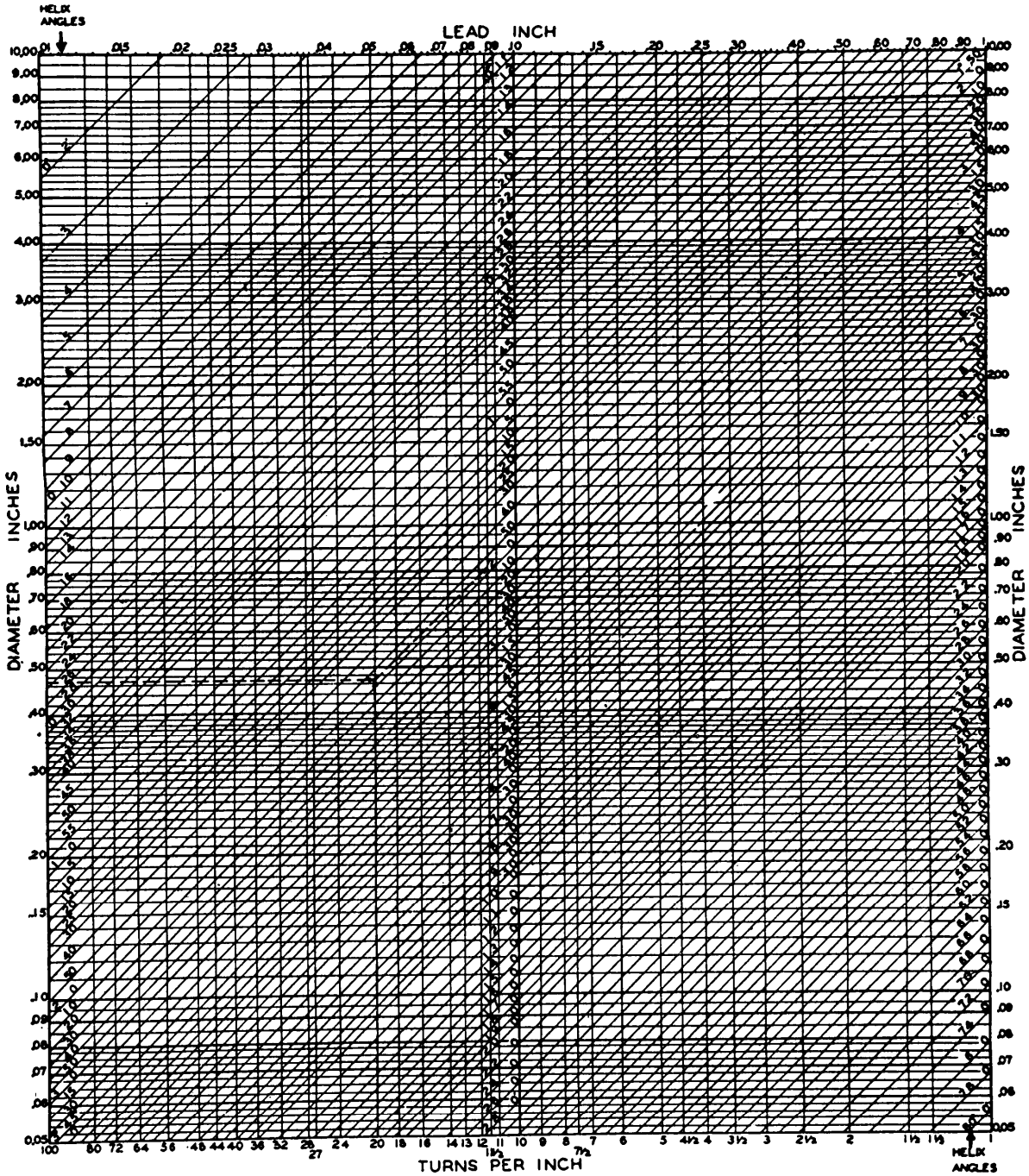

(Courtesy of the Bureau of Standards)

Figure 281. Chart for determining the helix angles of screw threads.

TABLE VI. THREAD LEAD CHECKING

Threads per inch	Number of thread turns								
	1	2	3	4	5	6	7	8	9
1	1.00000	2.00000	3.00000	4.00000	5.00000	6.00000	7.00000	8.00000	9.00000
2	.50000	1.00000	1.50000	2.00000	2.50000	3.00000	3.50000	4.00000	4.50000
2.5	.40000	.80000	1.20000	1.60000	2.00000	2.40000	2.80000	3.20000	3.60000
3	.33333	.66667	1.00000	1.33333	1.66667	2.00000	2.33333	2.66667	3.00000
3.5	.28571	.57143	.85714	1.42856	1.42857	1.71428	2.00000	2.28571	2.57143
4	.25000	.50000	.75000	1.00000	1.25000	1.50000	1.75000	2.00000	2.25000
4.5	.22222	.44444	.66667	.88889	1.11111	1.33333	1.55555	1.77778	2.00000
5	.20000	.40000	.60000	.80000	1.00000	1.20000	1.40000	1.60000	1.80000
5.5	.18182	.36364	.54545	.72727	.90909	1.09091	1.27273	1.45455	1.63636
6	.16667	.33333	.50000	.66667	.83333	1.00000	1.16667	1.33333	1.50000
7	.14285	.28571	.42857	.57143	.71429	.85714	1.00000	1.14286	1.28571
8	.12500	.25000	.37500	.50000	.62500	.75000	.87500	1.00000	1.12500
9	.11111	.22222	.33333	.44444	.55555	.66667	.77778	.88889	1.00000
10	.10000	.20000	.30000	.40000	.50000	.60000	.70000	.80000	.90000
11	.09091	.18182	.27273	.36364	.45455	.54545	.63636	.72727	.81818
11.5	.08696	.17391	.26087	.34873	.43478	.52174	.60869	.69565	.78261
12	.08333	.16667	.25000	.33333	.41666	.50000	.58333	.66666	.75000
12.7	.07874	.15748	.23622	.31496	.39370	.47244	.55118	.62992	.70866
13	.07692	.15384	.23076	.30769	.38461	.46154	.53846	.61538	.69231
14	.07143	.14285	.21428	.28571	.35714	.42856	.50000	.57142	.64285
16	.06250	.12500	.18750	.25000	.31250	.37500	.43750	.50000	.56250
18	.05555	.11111	.16667	.22222	.27778	.33333	.38888	.44444	.50000
20	.05000	.10000	.15000	.20000	.25000	.30000	.35000	.40000	.45000
22	.04545	.09091	.13636	.18182	.22727	.27273	.31818	.36364	.40909
24	.04167	.08333	.12500	.16667	.20833	.25000	.29167	.33333	.37500
25	.04000	.08000	.12000	.16000	.20000	.24000	.28000	.32000	.36000
26	.03846	.07692	.11538	.15384	.19230	.23076	.26922	.30768	.34614
27	.03704	.07407	.11111	.14815	.18518	.22222	.25926	.29629	.33333
28	.03571	.07143	.10714	.14286	.17857	.21428	.25000	.28571	.32143
30	.03333	.06667	.10000	.13333	.16667	.20000	.23333	.26667	.30000
32	.03125	.06250	.09375	.12500	.15625	.18750	.21875	.25000	.28125
34	.02941	.05882	.08823	.11765	.14706	.17647	.20588	.23529	.26471
36	.02778	.05555	.08333	.11111	.13889	.16667	.19444	.22222	.25000
38	.02632	.05263	.07894	.10526	.13157	.15789	.18420	.21052	.23883
40	.02500	.05000	.07500	.10000	.12500	.15000	.17500	.20000	.22500

TABLE VII. EQUIVALENT HARDNESS NUMBERS

1. C.	2. 15-N	3. 30-N	4. 45-N	1. C.	2. 15-N	3. 30-N	4. 45-N
80	96.5	92.0	87.0	50	85.5	68.5	55.0
79	----	91.5	86.5	49	85.0	67.5	54.0
78	96.0	91.0	85.5	48	84.5	66.5	52.5
77	----	90.5	84.5	47	84.0	66.0	51.5
76	95.5	90.0	83.5	46	83.5	65.0	50.0
75	----	89.0	82.5	45	83.0	64.0	49.0
74	95.0	88.5	81.5	44	82.5	63.0	48.0
73	----	88.0	80.5	43	82.0	62.0	46.5
72	94.5	87.0	79.5	42	81.5	61.5	45.5
71	----	86.5	78.5	41	81.0	60.5	44.5
70	94.0	86.0	77.5	40	80.5	59.5	43.0
69	93.5	85.0	76.5	39	80.0	58.5	42.0
68	----	84.5	75.5	38	79.5	57.5	41.0
67	93.0	83.5	74.5	37	79.0	56.5	39.5
66	92.5	83.0	73.0	36	78.5	56.0	38.5
65	92.0	82.0	72.0	35	78.0	55.0	37.0
64	----	81.0	71.0	34	77.0	54.0	36.0
63	91.5	80.0	70.0	33	76.5	53.0	35.0
62	91.0	79.0	69.0	32	76.0	52.0	33.5
61	90.5	78.5	67.5	31	75.5	51.5	32.5
60	90.0	77.5	66.5	30	75.0	50.5	31.5
59	89.5	76.5	65.5	29	74.5	49.5	30.0
58	----	75.5	64.0	28	74.0	48.5	29.0
57	89.0	75.0	63.0	27	73.5	47.5	28.0
56	88.5	74.0	62.0	26	72.5	47.0	26.5
55	88.0	73.0	61.0	25	72.0	46.0	25.5
54	87.5	72.0	59.5	24	71.5	45.0	24.0
53	87.0	71.0	58.5	23	71.0	44.0	23.0
52	86.5	70.5	57.5	22	70.5	43.0	22.0
51	86.0	69.5	56.0	21	70.0	42.5	20.5
				20	69.5	41.5	19.5

8.27.4 Thread lead checking is shown in table VI.

8.27.5 Equivalent hardness numbers are shown in table VII.

8.27.6 Key to table of equivalent hardness numbers

1. "Rockwell" hardness tester, C scale, "Brale" penetrator—150 kg. load.

2. "Rockwell" superficial, 15–N scale, "N Brale" penetrator—15 kg. load.

3. "Rockwell" superficial, 30-N scale, "N Brale" penetrator—30 kg. load.

4. "Rockwell" superficial, 45–N scale, "N Brale" penetrator—45 kg. load.

Copies of this Military Standard may be obtained by directing requests as follows:

For Department of the Army agencies, to Chief of Ordnance Corps or as directed by that activity.

For Department of the Army contractors, to the Contracting Officer.

For Department of the Navy activities, to the

Commanding officer, Naval Supply Center, Norfolk 11, Va.

For Department of the Navy contractors, to the Bureau of Supplies and Accounts, Washington 25, D. C.

For the Marine Corps, to the Quartermaster General, Headquarters, U. S. Marine Corps, Washington 25, D. C.

For the Department of the Air Force activities and Air Force contractors, to the Commanding General, Air Materiel Command, Wright-Patterson Air Force Base, Dayton, Ohio.

Copies of this Military Standard maybe obtained for other than official use by individuals, firms, and contractors from the Superintendent of Documents, U. S. Government Printing Office, Washington 25, D. C.

Both the title and the identifying symbol number should be stipulated when requesting copies of Military Standards.

Custodians:
Army—Ordnance Corps
Navy—Bureau of Ordnance
Air Force

Other interest:
All other Army technical services and Navy bureaus.

INSTRUCTIONS: In a continuing effort to make our standardization documents better, the DoD provides this form for use in submitting comments and suggestions for improvements. All users of military standardization documents are invited to provide suggestions. This form may be detached, folded along the lines indicated, taped along the loose edge (DO NOT STAPLE), and mailed. In block 5, be as specific as possible about particular problem areas such as wording which required interpretation, was too rigid, restrictive, loose, ambigous, or was incompatible, and give proposed wording changes which would alleviate the problems. Enter in block 6 any remarks not related to a specific paragraph of the document. If block 7 is fried out, an acknowledgement will be mailed to you within 30 days to let you know that your comments were received and are being considered.

NOTE: This form may not be used to request copies of documents, nor to request waivers, deviation, or clarification of specification requirements on current contracts. Comments submitted on this form do not constitute or imply authorization to waive any portion of the referenced document(s) or to amend contractual requirements.

(Fold along this line)

(Fold along this line)

DEPARTMENT OF THE ARMY

NO POSTAGE NECESSARY IF MAILED IN THE UNITED STATES

OFFICIAL BUSINESS
PENALTY FOR PRIVATE USE $300

BUSINESS REPLY MAIL
FIRST CLASS PERMIT NO. 12062 WASHINGTON D. C.
POSTAGE WILL BE PAID BY THE DEPARTMENT OF THE ARMY

Commander
US Army Armement Research and Development Command
ATTN: DRDAR-TST-S
Dover, NJ 07801

STANDARDIZATION DOCUMENT IMPROVEMENT PROPOSAL

(See Instructions – Reverse Side)

1. DOCUMENT NUMBER	2. DOCUMENT TITLE

3a. NAME OF SUBMITTING ORGANIZATION	4. TYPE OF ORGANIZATION *(Mark one)*
b. ADDRESS *(Street, City, State, ZIP Code)*	☐ VENDOR ☐ USER ☐ MANUFACTURER ☐ OTHER *(Specify)*: _____

5. PROBLEM AREAS

a. Paragraph Number and Wording:

b. Recommended Wording:

c. Reason/Rationale for Recommendation:

6. REMARKS

7a. NAME OF SUBMITTER *(Last, First, MI)* – Optional	b. WORK TELEPHONE NUMBER *(Include Area Code)* – Optional
c. MAILING ADDRESS *(Street, City, State, ZIP Code)* – Optional	8. DATE OF SUBMISSION *(YYMMDD)*

DD FORM 82 MAR 1426

PREVIOUS EDITION IS OBSOLETE.