MILITARY SPECIFICATION SHEET

NUT, PLAIN, CLINCH
(SELF-CLINCHING, ROUND)

This specification is approved for use by all Departments and Agencies of the Department of Defense.

The complete requirements for acquiring the nuts described herein shall consist of this specification and the latest issue of MIL-N-45938.

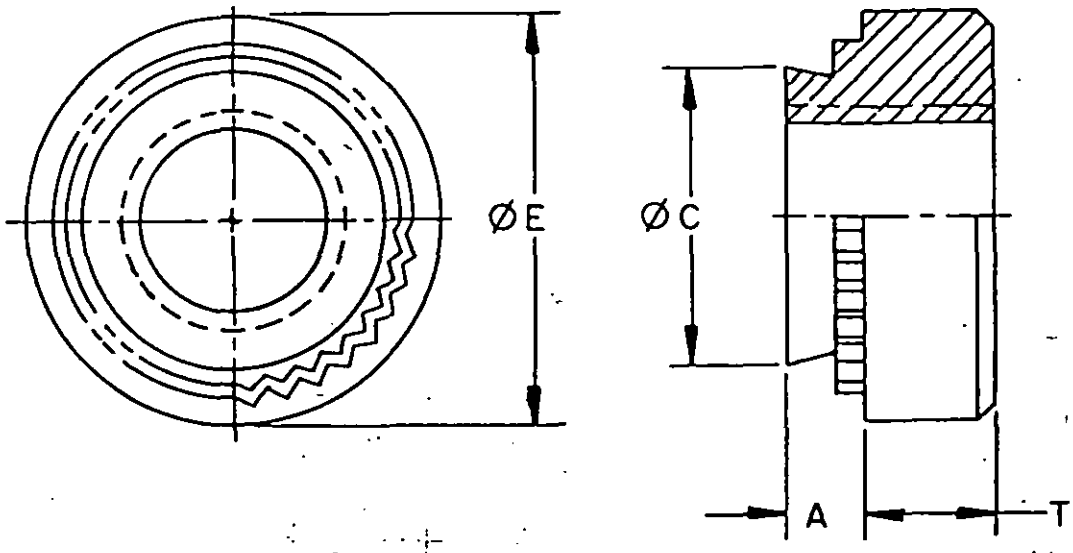

NOTE: All dimensions are in inches.

FIGURE 1. Configuration.

(B) Denotes changes

FSC 5310

TABLE I. Dash numbers and dimensions.

DASH NO			THREAD	A +.000 -.005	SHEET THICKNESS	HOLE DIA IN SHEET +.003 -.000	ØC DIA +.000 -.003	ØE DIA ±.015	T ±.015	CENTER OF HOLE TO SHEET EDGE-MIN
CARBON STEEL	CRES	AL ALLOY	-2B							
1 2	1C 2C	1A 2A	.086-56UNC	.030 .038	.032-.039 .040-UP	.166	.165	.250	.062	.188
3 4 5	3C 4C 5C		.112-40UNC	.030 .038 .054	.032-.039 .040-.055 .056-UP	.166	.165	.250	.062	.188
		6A 7A	.112-40UNC	.038 .054	.040-.055 .056-UP	.1875	.187	.250	.094	.219
8 9	8C 9C		.138-32UNC	.038 .054	.040-.055 .056-UP	.1875	.187	.281	.062	.219
		10A 11A	.138-32UNC	.038 .054	.040-.055 .056-UP	.213	.212	.281	.094	.266
12 13	12C 13C		.164-32UNC	.038 .054	.040-.055 .056-UP	.213	.212	.312	.094	.266
		14A 15A	.164-32UNC	.038 .054	.040-.055 .056-UP	.234	.233	.312	.125	.281
16 17	16C 17C		.190-32UNF	.054 .087	.056-.090 .091-UP	.250	.249	.344	.094	.281
		18A	.190-32UNF	.054	.056-UP	.296	.295	.375	.156	.312
19 20	19C 20C	19A 20A	.250-28UNF	.087 .120	.091-.124 .125-UP	.344	.343	.438	.172	.344
21 22	21C 22C	21A 22A	.3125-24UNF	.087 .120	.091-.124 .125-UP	.413	.411	.500	.234	.375
23 24	23C 24C	23A 24A	.375-24UNF	.120 .235	.125-.249 .250-UP	.500	.498	.562	.266	.438
25 26	25C 26C	25A 26A	.500-20UNF	.120 .235	.125-.249 .250-UP	.656	.654	.812	.359	.625
27 28 29	27C 28C 29C	27A 28A 29A	.250-20UNC	.054 .087 .120	.056-.090 .091-.124 .125-UP	.344	.343	.438	.172	.344

(B)

REQUIREMENTS:

1. Material - Carbon steel, heat treated to a case hardness 35HRC, for use in materials with a hardness of 85HRB max.
   Corrosion-resistant steel for use in materials with a hardness of 70HRB max.
   Aluminum alloy (2024-T4) for use in materials with a hardness of 50HRB max.

2. Finish - Carbon steel shall be cadmium plated.
   Corrosion-resistant steel shall be cleaned, descaled and passivated in accordance with ANSI/ASTM A380.
   Aluminum alloy shall be plain, unfinished.

3. Threads - The threads shall be in accordance with MIL-S-7742.

4. Push-out and torque-out values shall be as specified in Table II when properly installed in the following materials.
   Carbon steel nuts in sheet having a hardness of 85HRB max.
   Corrosion-resistant steel nuts in sheet having a hardness of 70HRB max.
   Aluminum alloy nuts in sheet having a hardness of 50HRB max.

TABLE II. Performance data.

SIZE	APPROXIMATE INSTALLATION FORCE LBS	CARBON STEEL & CRES		AL ALLOY	
		PUSH-OUT LBS-MIN	TORQUE-OUT IN.-LBS MIN	PUSH-OUT LBS-MIN	TORQUE-OUT IN.-LBS MIN
.086	3000	60	10	40	8
.112	3000	70	12	60	10
.138	5000	90	15	80	15
.164	5000	95	25	85	25
.190	8000	100	30	85	30
.250	7000	200	100	125	80
.3125	7000	300	160	225	130
.375	10000	500	250	325	200
.500	14000	800	500	—	—

5. Military part number: Consists of M45938/1 and a dash number taken from Table I.
   Example: M45938/1-1 = Nut, plain, clinch, carbon steel, .086-56UNC-2B thread.

Recommended installation procedure:

a. Punch or drill hole.
b. Locate nut shank or pilot squarely in the hole.
c. Apply clinching force between two parallel flat surfaces to totally embed clinching ring around the entire circumference. The shoulder shall contact the structure for a full 360°, but shall have no part of the shoulder imbedded in the structure. The bottom of the shank shall not protrude from the underside of the structure.
d. Install screw or bolt from pilot side of nut.

Custodians:
Army - AR
Navy - OS

Review activities:
Army - AV, EA

User activities:
Navy - MC

Agent:
DLA - IS

Preparing activity:
Army - AR

(Project 5310-1352)