INCH-POUND

MIL-T-29504/15
21 May 1992

MILITARY SPECIFICATION SHEET

TERMINI, FIBER OPTIC, CONNECTOR, REMOVABLE, ENVIRONMENT RESISTING, CLASS S, TYPE II, STYLE A, SOCKET TERMINUS, FRONT RELEASE, CERAMIC GUIDE BUSHING (FOR MIL-C-28876 CONNECTORS)

This specification is approved for use by all Departments and Agencies of the Department of Defense.

The requirements for acquiring the product described herein shall consist of this specification sheet and the issue of the following specification listed in that issue of the Department of Defense Index of Specifications and Standards (DODISS) specified in the solicitation: MIL-T-29504.

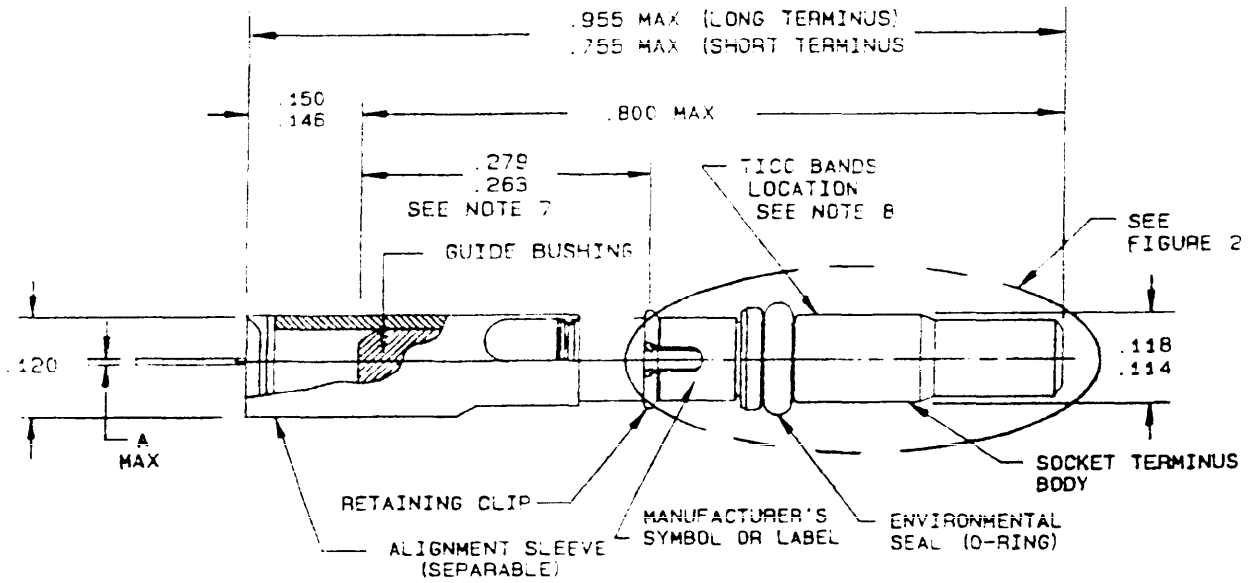

FIGURE 1. Socket terminus.

DISTRIBUTION STATEMENT A. Approved for public release; distribution is unlimited.

Source: https://assist.dla.mil -- Downloaded: 2016-12-10T05:53Z
Check the source to verify that this is the current version before use.

Inches	mm
.001	0.03
.0787	1.999
.0788	2.002
.101	2.57
.102	2.59
.104	2.64
.114	2.90
.118	3.00
.120	3.05
.121	3.07
.125	3.18
.146	3.71
.156	3.96
.263	6.68
.279	7.09
.300	7.62
.800	20.32
.955	24.26

NOTES:

1. Dimensions are in inches.
2. Metric equivalents are given for general information only.
3. Guide bushing "A" diameter is based upon 1.00 inch = 25400.0 µm or 1.00 µm = 0.00003937 inch.
4. All diameters to be concentric within .002 (0.05 mm).
5. Dimensions apply after plating.
6. (O-ring) shall be a fluorosilicon material.
7. Dimension .263 (6.68 mm) or .279 (7.09 mm) to be measured when installed in connector equivalent gauge fixture. See figure 3.
8. The TICC bands shall be at the rear of the socket terminus.
9. The .755 (19.78 mm) dimension is a maximum for the short terminus.
10. The TICC bands shall not appear on the short terminus. The individual bag or container shall either have both the TICC bands or the equivalent MIL-T-29504 Part or Identifying Number (PIN) marking on the container or on a tag inside the container.

FIGURE 1. Socket terminus - Continued.

Source: https://assist.dla.mil -- Downloaded: 2016-12-10T05:53Z
Check the source to verify that this is the current version before use.

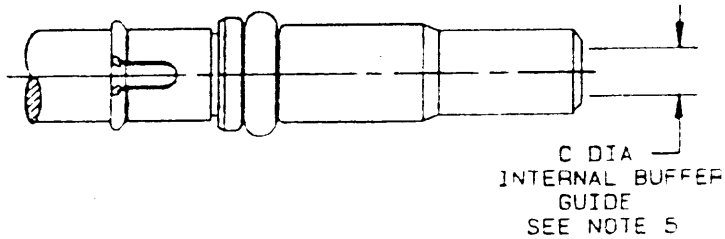

C diameter (internal buffer guide)	
Inches	mm
.056	1.42
.053	1.35

NOTES:

1. Dimensions are in inches.
2. Metric equivalents are given for general information only.
3. All diameters to be concentric within .002 (0.05 mm).
4. Dimensions shown after plating.
5. The "C" diameter of the internal buffer guide is used to center the optical waveguide fiber buffer.

FIGURE 2. Terminus internal buffer guide.

Source: https://assist.dla.mil -- Downloaded: 2016-12-10T05:53Z
Check the source to verify that this is the current version before use.

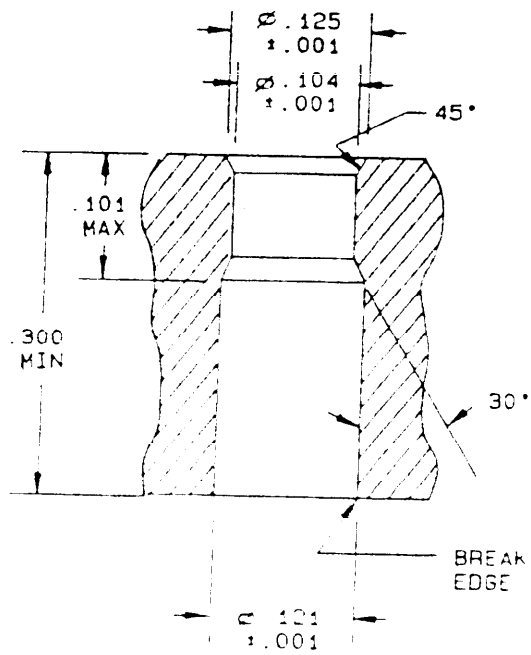

Inches	mm
.001	0.03
.101	2.57
.104	2.64
.121	3.07
.125	3.18
.300	7.62

NOTES:

1. Dimensions are in inches.
2. Metric equivalents are given for general information only.
3. All diameters to be concentric within .002 (0.05 mm).
4. Dimensions shown after plating.

FIGURE 3. Insert equivalent fixture for terminus measurement.

Source: https://assist.dla.mil -- Downloaded: 2016-12-10T05:53Z
Check the source to verify that this is the current version before use.

REQUIREMENTS:

Temperature: -55°C to +85°C operating, -62°C to +85°C storage

Design and construction: See figures 1 and 2 and table I.

Weight: Not greater than 1.0.

Adhesives: Use Hysol 1c, Epotek 330 or 353 series or equivalent as approved by the qualifying activity. Mixing and curing instructions shall be supplied with the assembly instructions provided with each terminus or applicable connector.

Material: Guide bushing, ceramic.

Tools: See table II.

Mating termini: MIL-T-29504/C.

Crimp sleeve: (2.5 mm) to be supplied with termini when specified in PIN.

The following MIL-T-29504 requirements are not applicable to this specification sheet:

Insertion loss	Optical discontinuities
Temperature life	Terminus retention
Terminus engagement and separation forces	Terminus cleaning
	Thermal shock
Shock	Vibration
Mating durability	Salt spray

PIN:

M29504/15	-XXXX	C
Basic specification and specification sheet	Dash number (TICC number, see table I)	Crimp sleeve (optional)

Qualification: To qualify or requalify termini to this specification sheet, all requirements of MIL-C 28876 shall be met using the qualifying terminus in a connector qualified to MIL-C-28876. Multimode termini shall be granted qualification upon the successful qualification of single mode termini. Short termini shall be granted qualification upon the successful qualification of long termini.

Usage: Termini compliant with this specification sheet may be used in connectors other than MIL-C-28876 at the discretion of the acquiring activity.

Source: https://assist.dla.mil -- Downloaded: 2016-12-10T05:53Z
Check the source to verify that this is the current version before use.

TABLE I. TICC numbers and dimensions for guide bushing.

TICC numbers				A diameter 1/	
multimode (long)	singlemode (long)	multimode (short)	singlemode (short)	inches +0.0004 -0.0000	um 2/
4167	4177	4187	4197	0.00480	122.0
4168	4178	4188	4198	0.00484	123.0
4169	4179	4189	4199	0.00488	124.0
4170	4180	4190	4200	0.00492	125.0
4171	4181	4191	4201	0.00496	126.0
4172	4182	4192	4202	0.00500	127.0
4173	4183	4193	4203	0.00504	128.0
4174	4184	4194	4204	0.00551	140.0
4175	4185	4195	4205	0.00560	142.0
4176	4186	4196	4206	0.00567	144.0

1/ For maximum performance, termini should be selected for the best (tightest) fit to the fiber. Fitting the next size larger terminus to a fiber may affect connector performance.
2/ Rounded to the nearest 0.5 um

TABLE II. Tools.

End size	Insertion tool	Removal tool	Alignment sleeve tool	Polishing fixture tool
1b	M81969/46-01 or M81969/49-01	M81969/47-01	Hughes PN 4568335H	Hughes PN 4568334H

Patent notice: The Government does not have a royalty free license under the following patents for the benefit of manufacturers of the item, either for the Government or for use in equipment to be delivered to the Government.

Patent number	Patent expiration date
US 4707068	11/17/2004

Source: https://assist.dla.mil -- Downloaded: 2016-12-10T05:53Z
Check the source to verify that this is the current version before use.

CONCLUDING MATERIAL

Custodians:
Army - CR
Navy - SH
Air Force - 85
NASA - NA

Review activities:
Army - MI
Navy - AS, MC
Air Force - 17, 19, 80, 90, 99

User activities:
Navy - OS, YD
Air Force - 13, 14

Preparing activity:
Navy - SH

Agent:
DLA - ES

(Project: 6060-0096-A1)

Source: https://assist.dla.mil -- Downloaded: 2016-12-10T05:53Z
Check the source to verify that this is the current version before use.

Source: https://assist.dla.mil -- Downloaded: 2016-12-10T05:53Z
Check the source to verify that this is the current version before use.