INCH-POUND

MIL-DTL-46506E
19 August 2009
SUPERSEDING
MIL-B-46506D
30 August 1984

DETAIL SPECIFICATION

BOXES, AMMUNITION PACKING, WOOD, WIREBOUND

This specification is approved for use by all Departments and Agencies of the Department of Defense.

1. SCOPE

1.1 Scope. This specification covers two types and six classes of wirebound box designs intended for ammunition use (see 6.1). All boxes have looped closures, and are top opening. Boxes may or may not have handles made from rope or webbing. Ends may be one piece plywood.

1.2 Classification. The basic box design and modifications thereof shall be of the following types, classes and grades:

Type I	Without handles
Class 1	With plywood ends (see Figure 3)
Class 2	With batten ends (see Figure 4)
Type II	With two handles, Rope or Webbing
Class 1	With regular cleats, Rope Handles (see Figure 5)
Class 2	With regular cleats, 3/8”plywood ends, Webbing Handles (see Figure 6)
Class 3	With wide cleats, 1/2” plywood ends, Webbing Handles (see Figure 7)
Class 4	With wide cleats, 1/2” plywood ends, Webbing Handles and end batten (see Figure 8)
Grade A	Preservative and heat treated boxes for unrestricted overseas shipment or long term storage and handling of ammunition or explosive ammunition components.
Grade B	Heat treated non-preservative treated boxes for overseas shipment and short term storage and handling of ammunition or explosive ammunition components.

Comments, suggestions, or questions on this document should be addressed to: Commander, US Army ARDEC, ATTN: RDAR-QES-E, Picatinny Arsenal, New Jersey 07806-5000, or ardecstdzn@conus.army.mil. Since contact information can change, you may want to verify the currency of this address information using the ASSIST online database at http://assist.daps.dla.mil.

AMSC N/A FSC: 8140

DISTRIBUTION STATEMENT A. Approved for public release; distribution is unlimited.

Source: https://assist.dla.mil -- Downloaded: 2016-12-11T06:16Z
Check the source to verify that this is the current version before use.

Grade C	Boxes without preservative or heat treatment. For interplant shipment and for storage and handling under controlled conditions of ammunition or explosive ammunition or explosive ammunition components, for domestic shipment only.

2. APPLICABLE DOCUMENTS

2.1 General. The documents listed in this section are specified in sections 3 or 4 of this specification. This section does not include documents cited in other sections of this specification or recommended for additional information or as examples. While every effort has been made to ensure the completeness of this list, document users are cautioned that they must meet all specified requirements of documents cited in sections 3 and 4 of this specification, whether or not they are listed.

2.2 Government documents.

2.2.1 Specifications, standards, and handbooks. The following specifications, standards and handbooks form a part of this document to the extent specified herein. Unless otherwise specified, the issues of these documents are those cited in the solicitation or contract (see 6.2).

FEDERAL SPECIFICATIONS

T-R-650	Rope, Yarn and Twine, Bast Fiber

COMMERCIAL ITEM DESCRIPTIONS

A-A-55057	Panels, Wood/Wood Based; Construction and Decorative

DEPARTMENT OF DEFENSE SPECIFICATIONS

MIL-W-17337	Webbing, Textile, Woven, Nylon

DEPARTMENT OF DEFENSE STANDARDS

MIL-STD-1916	DOD Preferred Method for Acceptance of Product

(Copies of these documents are available online at http://assist.daps.dla.mil/quicksearch/ or from the Standardization Document Order Desk, 700 Robbins Avenue, Building 4D, Philadelphia, PA 19111-5094).

2.3 Non-Government publications. The following documents form a part of this document to the extent specified herein. Unless otherwise specified, the issues of these documents are those cited in the solicitation or contract.

ASTM INTERNATIONAL

ASTM D4442	Standard Test Methods for Direct Moisture Content Measurement of Wood and Wood-Base Materials
ASTM F1667	Standard Specification for Driven Fasteners: Nails, Spikes, and Staples

(Copies of this document are available from ASTM International, 100 Barr Harbor Drive, West Conshohocken, PA 19428-2959 or www.astm.org.)

Source: https://assist.dla.mil -- Downloaded: 2016-12-11T06:16Z
Check the source to verify that this is the current version before use.

2.4 Order of precedence. Unless otherwise noted herein or in the contract, in the event of a conflict between the text of this document and the references cited herein, the text of this document takes precedence. Nothing in this document, however, supersedes applicable laws and regulations unless a specific exemption has been obtained.

3. REQUIREMENTS

3.1 First article. When specified (see 6.2), a sample of wooden boxes shall be subjected to first article inspection in accordance with 4.2.

3.2 Conformance inspection. A sample of wooden boxes shall be subjected to conformance inspection in accordance with 4.3.

3.3 Wood species. The species of wood acceptable under this specification are classified in groups as follows:

Group I	Basswood, Cottonwood, Cypress, Noble Fir, Magnolia, Spruce, Yellow Poplar, Jack Pine, Lodgepole Pine, Ponderosa (Western Yellow) Pine, Red (Norway) Pine, Sugar Pine, White Pine, Willow
Group II	Douglass Fir, Hemlock, Western Larch, Southern Yellow Pine, Tamarack
Group III	Black Ash, Pumpkin Ash, Soft Elm, Red or Black Gum, Soft Maple, Sycamore, Water Tupelo
Group IV	White Ash, Beech, Birch, Hard Elm, Hackberry, Hickory, Hard Maple, Oak, Pecan, Locust

3.4 Finish. Lumber shall be cut with the grain and cut to length and edges shall be straight and square with the surface of the lumber. Faceboards shall be surfaced on one side and may be resawn on the other side; the resawn surface shall face to the inside of the container. Face boards may be resawn on both surfaces provided the resawn surfaces do not interfere with marking.

3.5 Season checks. Season checks occurring in the central portion of a piece of the finished container shall be permitted provided they do not extend through the thickness of the piece in which they occur. Season checks which extend through the thickness of the piece shall be considered as splits (see 3.6) except that when adjacent to a knot they shall be considered a component part of an incased knot defect. Season checks less than 1/3 the length of the board occurring at the end of the board shall not be considered cause for rejection.

3.6 Splits.

3.6.1 Splits extending entire length of piece. Splits, extending the entire length of the board shall be permitted for sides, top, bottom and ends, provided the width of the narrowest piece of the board measured from the split is 1.5 inches or greater and further provided that a staple holds each end of each piece in place.

3.6.2 Splits diverging to edge of piece. Splits diverging to outer edge of box shall not be permitted. Splits extending less than the entire length of the board and not diverging to an edge of a board shall be permitted for sides, top, bottom and ends, provided that if the split were extended, the resulting boards would comply with the minimum requirements of 3.6.1.

Source: https://assist.dla.mil -- Downloaded: 2016-12-11T06:16Z
Check the source to verify that this is the current version before use.

3.6.3 Splits extending through staple or nail holes. Splits in the end of boards caused by the fastener which do not exceed 3 inches in length are acceptable provided the split does not terminate in the edge of the board.

3.7 Knots and knotholes.

3.7.1 Knots. In faceboards, sound tight knots or clusters of knots shall be permitted provided the overall dimension as measured across grain shall not be greater than 1.5 inches nor greater than 1/3 the width of the board.

3.7.2 Knots in cleats and battens. Sound knots shall be permitted providing the cross-sectional area of the knot shall not be greater than 1/4 the cross-sectional area of the piece. The distance between knots shall be greater than 6 inches. No part of any knot shall be closer to an end of the cleats or batten than 1.25 inches.

3.7.3 Knotholes in faceboards. Knotholes, loose knots, or worm holes greater than 5/8 inch across the largest dimension shall be cause for rejection. Individual knotholes, loose knots or worm holes, ranging in size to 5/8 inch in diameter across the largest dimension shall be permitted in faceboards provided they are spaced not less than 6 inches apart. Small holes less than 1/16 inch in diameter shall be permitted in any piece provided no concentration of such holes exceeds five in any square inch.

3.7.4 Knotholes in cleats or battens. Knotholes or loose knots shall not be permitted within 1 inch from either end of a cleat or batten. The diameter of loose knots or knot holes shall not be greater than 1/4 the width or depth of a cleat or batten.

3.8 Wane and divergency. At least one surface of faceboard, for example the surface to be placed on the outside of the container, shall be sufficiently smooth and free of stain to permit legible marking.

3.8.1 Wane. Wane shall not be greater than 1/2 inch in width on the surface on which it appears or 1/6 the length or 1/2 the thickness. Evidence of decay in which the disintegration is readily recognizable shall be cause for rejection.

3.8.2 Divergency of grain. The divergency of grain in faceboards, cleats, or battens shall not be greater than 1 inch in 8 inches of length.

3.9 Faceboards. The thickness of resawn lumber used for faceboards or end boards shall be 3/8 $\pm$ 1/16 inch thick.

3.9.1 Width of faceboards. The minimum width of any board at the lead or trailing edge of any box blank shall be 3.5 inches. Boards used as sides for all boxes 5.5 inches or less in depth shall be one piece otherwise the minimum width of any board used in the sides, top, bottom or end of a box shall be 2.5 inches.

3.9.2 Alternative faceboards. The use of 3/8 inch thick plywood, 3 ply minimum, is permissible for faceboards. Plywood shall confirm to Type A of A-A-55057, Grade C-D with exterior glue Identification index 24/0. The C face shall be outside. The grain of the face shall be parallel with the length of the board required.

3.10 Thickness and width of cleats and battens.

Source: https://assist.dla.mil -- Downloaded: 2016-12-11T06:16Z
Check the source to verify that this is the current version before use.

3.10.1 Cleats. All cleats shall be mitered. Cleats for Type I, Class 1 and 2 and Type II, Class 1 and 2 boxes shall be made from Group II, III, or IV woods only. Cleat for Type II, Class 3 and 4 boxes shall be made from Group III and IV only. The thickness and width of cleats shall be as shown in the applicable figure. A tolerance of ± 1/16 inch shall apply to width and thickness of cleats.

3.10.2 Battens. Battens for ends may be made from any group wood. The thickness and width of battens shall be as shown in the applicable figures. A tolerance of ± 1/16 shall apply to thickness of battens and a tolerance of ± 1/8 inch to the width of battens. For Type II boxes, specifying rope handles, end battens shall be routed for attachment of rope handles as shown in Figure 1.

3.11 Binding wires. Binding wires shall be medium temper low carbon annealed steel wire. Wire used shall have such physical properties as to permit satisfactory manufacture of loops without fracturing the wire. The tensile strength shall be from 60,000 to 85,000 pounds per square inch. Splicing or welding of a binding wire during manufacture is permitted.

3.11.1 Coating. The surface of the wire shall have a regular galvanized coating. The coating shall be smooth and shall not flake or peel where the wire is bent or twisted.

3.11.2 Diameter of wire. The diameter of all binding wire shall be .092 ± .003 inches (13 Gage).

3.11.3 Wire spacing. When possible, the centerline of loop closures shall be spaced equidistant across the outside length of the box.

3.11.4 Number of wires. Unless otherwise specified on the applicable drawing, the number of wires used shall be as specified in Table I.

Table I. Number of wires per length of box

Inside length box (inches)	Up to 9 13/16	9 7/8 to 14	14 1/16 to 27 5/8	27 11/16 to 36	36 1/16 to 42 5/8	42 11/16 to 50	50 1/16 to 72
Number of wires	2	3	4	5	6	7	8

3.11.5 Loop closures. Loop closures shall be either the looped wire closure or twisted wire closure illustrated in Figure 9. The loop, both side and top, shall project beyond the edges of the faceboard a minimum of one inch. Top loops shall fit over the side loops. Loops shall be produced which shall provide a tight secure closure when closed by machinery or manually as illustrated in Figure 9.

3.12 Staples. Staples shall be made from hard temper low carbon steel wire and shall have a regular galvanized coating. The tensile strength of stapling wire shall be from 95,000 to 125,000 pounds per square inch. Galvanized coating shall be as specified in 3.11.1.

3.12.1 Staples sizes. The staples shall be as specified in Table II. Staples in ends shall be 1 3/8 inches, 14 gage when rope handles are specified. Staples in ends without rope handles shall be 1.25 inch, 16 gage.

Source: https://assist.dla.mil -- Downloaded: 2016-12-11T06:16Z
Check the source to verify that this is the current version before use.

Table II. Length of Staples per Thickness of Boards

Thickness of boards or combined thickness of boards, cleats or battens (inches)	Length and Gage of Staples			
	In boards only		In boards, over wire	
	Length, inches	Gage	Length, inches	Gage
3/8	1/2	18	9/16	18
3/4 (2 ply 3/8)	7/8	18	1	18
1 1/8 to 1 3/8	1.25	16 1/	1.25	16 1/

Notes:
1/ 1 1/8 length 16 gage permissible into Group IV wood cleats.

3.12.2 Staple spacing. Staples shall be driven at spacing not to exceed 1.75 inches. When the length of the cleats requires interruption of the nominal spacing, this interrupted space shall not exceed 2.5 inches. The minimum number of staples in any cleat shall be three. At each corner of the box, the distance from the end of the cleat to the nearest staple shall not be greater than 1 5/8 inches. Staples in ends shall be driven at a spacing not to exceed 1.75 inches and two staples through ropes as shown in Figure 1.

3.13 Nails. Nails shall be cement coated or chemically etched cooler, sinker or box type complying with ASTM F1667. Uncoated nails shall be used in nailing end boards to battens when the nails pass through the boards and battens and are clinched.

3.13.1 Size and spacing of nails. The size of nails when used for fastening end boards to end battens shall be 4 penny, 1 3/8 inch long driven at an average spacing of 1.5 inches. Staples used to fasten end boards to end battens shall comply with 3.12.

3.13.2 Rope handle attachment. For attachment of rope handles, see Figure 1. Deviation from the nail or staple pattern shall be cause for rejection.

3.14 Box assembly inside dimensions. Inside dimensions shall be specified to the nearest 1/16 inch and shall have a tolerance of +1/8 inch. Compliance with inside dimensions specified on drawings or in contracts or orders shall be determined on the box assembled as shown in Figure 8A (see 6.5).

3.15 Fabrication.

3.15.1 Wood parts. All parts of the box shall be cut square to size. The grain of wood on top, bottom and sides shall run lengthwise with the box. Grain of wood in end boards shall run parallel to the top and bottom cleats. Cleats shall be flush with the ends of the faceboards. Top and bottom boards shall completely cover the edges of the side boards with a tolerance of minus 1/8 inch on each side. The maximum allowable gap between faceboards due to mis-manufacture or shrinkage shall not be greater than 1/4 inch.

3.15.2 Metal parts. Nails or staples not over wire shall be driven so that neither the head nor the point shall project above the surface of the wood. Occasional overdriving of nails shall be permitted but none shall be overdriven more than 1/8 the thickness of the piece. Clinched fasteners shall be flush or below the surface of the container. Fasteners shall be clinched in the thicker board.

3.15.3 Wires. The end of wires forming the loop closures shall be driven through the faceboard and tightly clinched against the inside surface of the faceboard.

Source: https://assist.dla.mil -- Downloaded: 2016-12-11T06:16Z
Check the source to verify that this is the current version before use.

3.16 End boards and end battens. The length of all end boards shall be the same as the inside width of the box specified. Resawn end boards extend 3/8 inch ± 1/16 inch beyond the ends of the battens. When plywood only is used as the end the width of the plywood shall equal the depth of the box minus 1/8 inch. When 3/8 inch plywood is used or specified for ends it shall comply with the requirements of 3.9.2. When 1/2 inch plywood is specified for the ends, it shall conform to Type A, A-A-55057, Grade C-D with exterior glue, 32/16 identification index, 3 ply. The length of end battens shall equal the distance between top and bottom cleats with a minus 1/8 inch tolerance. End battens shall be positioned across the grain of the end boards located 7/8 plus 1/16 inch from each end of the end boards.

3.17 Moisture content. The moisture content of the lumber after seasoning shall not be greater than 18% nor less than 9% of its oven dry weight when tested. Moisture content determination for plywood is not required.

3.18 Handles. Handles shall be made from jute, polyethylene, polypropylene, or webbing as stated bellow, unless otherwise specified.

3.18.1 Load test for handles. Handles shall be capable of supporting a static load, equal to twice the load to which it will be subjected in actual use.

3.18.2 Jute rope handles.

3.18.2.1 Rope handles for 13/16 inch thick batten boxes. Rope handles attached to 13/16 inch thick battens shall be manufactured of 1/2 inch diameter Type I or Type II, class 2 jute rope complying with T-R-650. Length of rope handle shall be determined in Figure 1A. This length includes approximately six inches of rope (three inches under each cleat) that is routed under the cleats for attachment of the rope handle.

3.18.2.2 Rope handles for 1 1/8 inch thick batten boxes. Rope handles attached to 1 1/8 inch thick battens shall be manufactured of 5/8 inch diameter Type I or Type II, class 2 jute rope complying with T-R-650. Length of rope handle shall be determined in Figure 1A. This length includes approximately six inches of rope (three inches under each cleat) that is routed under the cleats for attachment of the rope handle.

3.18.3 Polypropylene rope handles. Polypropylene rope for all handle applications shall meet the following requirements:

a. Rope size: 7/16 inch diameter

b. Color: Black

c.Yarn: Single ply (3 yarns/strand, minimum)

d. Rope Weight: 0.033 lbs/ft maximum

e. Rope Lay: 1.7 inches ± 5 %

d. Breaking Strength: 2500 lbs minimum average (average 5 breaks)

3.18.4 Polyethylene rope handles. Polyethylene rope for all handle applications shall meet the following requirements:

Source: https://assist.dla.mil -- Downloaded: 2016-12-11T06:16Z
Check the source to verify that this is the current version before use.

a. Rope size: 7/16 inch diameter

b. Color: Black

c. Yarn: 3 ply balance ply yarn

d. Rope Weight: 0.042 lbs/ft maximum

e. Rope Lay: 1.3 inches $\pm$ 5 %

f. Breaking Strength: 3000 lbs minimum average (average 5 breaks)

g. Filament Size: 600 Denier

3.18.5 Webbing handles. Webbing handles for use with plywood ends shall be Nylon, Woven, Textile Webbing conforming to the requirements of MIL-W-17337. Width shall be 1 inch and the color shall be black (see Figure 1B).

3.19 Preservative treatment. Completely immerse Grade A boxes, individual or palletized or the finished wood parts thereof for a minimum of one minute in a solution of wood preservative.

a. PQ56 reduced with water down to 1.8% copper-8-quinolinolate as solution.

b. An emulsion of wood preservative M-GARD W550 (zinc naphthenate) reduced with water down to 3% zinc as metal.

c. An emulsion of M-GARD W510 (copper naphthenate) reduced down with water to 2% copper as metal.

d. A solution of Cunapsol 5 (copper naphthenate) reduced down with water to 2% copper as metal.

e. Alternatively, completely flood Grade A boxes, individual or palletized or the finished wood parts thereof, for a minimum of one minute in PQ56, M-GARD W550, M-GARD W510 or Cunapsol 5 preservative, as applicable. Completely inundate all interior or exterior surfaces (when finished wood parts are dipped) with preservative. Exercise care to assure complete coverage of all surfaces of the board. Immediately following the dip treatment, drain the wood products being treated for a period of not less than 5 minutes. If wood products are palletized, tip the pallet load on edge to facilitate through drainage. After the dip treatment, air dry the boxes for a period of 24 hours minimum providing through ventilation thus allowing full circulation around all surfaces of the wood box. Accelerated drying in an oven or kiln is permitted providing oven or kiln does not exceed 160°F. Air dry boxes to a maximum moisture content of 18% when tested in accordance with 4.5.1 prior to shipment.

3.19.1 Presence of PQ56 (copper-8-quinolinolate) preservative. When treated with PQ56, the box shall show evidence of discoloration.

3.19.2 Presence of M-GARD W550 (zinc naphthenate emulsifiable) preservative. When treated with M-GARD W550, the box shall show evidence of discoloration.

Source: https://assist.dla.mil -- Downloaded: 2016-12-11T06:16Z
Check the source to verify that this is the current version before use.

3.19.3 Presence of M-GARD W510 (zinc naphthenate) or Cunapsol 5 (copper naphthenate) preservative. When treated with M-GARD W510 or Cunapsol 5, the box shall show evidence of discoloration.

3.20 Heat treatment (Grade A and B only). Boxes shall be fabricated from wood heat treated to a core temperature of 56°C for a minimum of 30 minutes or shall be heat treated to the same requirement after box fabrication. For Grade A boxes, heat treatment shall take place prior to preservation application. Each box shall be marked to show conformance to the International Plant Protection Convention Standard. The quality mark shall be placed on both ends of the box between the end cleats or end battens (see 6.9).

3.21 Box identification. Each box shall be marked on the bottom with name, address, month and year of manufacture, and the drawing number including the letter or number of the revision. Letters and figures shall not be less than 1/4 inch minimum in height. Printed identification shall not be indented more than 1/16 inch below the surface of the wood. The letters “PA” shall be annotated on all boxes subjected to the PQ56 (copper-8-quinolinolate) preservative treatment in accordance with 3.19. The letters “PB” shall be annotated on all boxes subjected to the zinc hydronap (zinc naphthenate emulsion) preservative treatment in accordance with 3.19. The letters “PC” shall be annotated on all boxes subjected to either the Cunapsol 5 (copper naphthenate) or M-GARD W510 (copper naphthenate) preservative in accordance with 3.19. The letters shall not be less than 1 inch in height and shall be separated from other markings.

3.22 Workmanship. Boxes, when set up, shall be square with well fitted corners and joints. Wires shall be uniformly applied and properly tightened so that there is no buckling and bulging and so that the closed box is tightly bound. The box shall be free of exposed splinters, metal projections or sharp edges which may cause injury when manually handled.

Source: https://assist.dla.mil -- Downloaded: 2016-12-11T06:16Z
Check the source to verify that this is the current version before use.

4. VERIFICATION

TABLE III. Requirement/verification cross reference matrix

METHOD OF VERIFICATION
N/A - Not applicable
1 - Analysis
2 - Demonstration
3 - Examination
4 - Test

CLASSES OF VERIFICATION
A - First article
B - Conformance

Section 3 Requirement		Verification Methods					Verification Class		Section 4 Method
		N/A	1	2	3	4	A	B	
3.1	First article				X	X	X		4.2
3.2	Conformance inspection				X	X		X	4.3
3.3	Wood species				X		X	X	4.3.3
3.4	Finish				X		X	X	4.3.3
3.5	Season checks				X		X	X	4.3.3
3.6	Splits								
3.6.1	Splits extending entire length of piece				X		X	X	4.3.3
3.6.2	Splits diverging to edge of piece				X		X	X	4.3.3
3.6.3	Splits extending through staple or nail holes				X		X	X	4.3.3
3.7	Knots and Knotholes								
3.7.1	Knots				X		X	X	4.3.3
3.7.2	Knots in cleats and battens				X		X	X	4.3.3
3.7.3	Knotholes in faceboards				X		X	X	4.3.3
3.7.4	Knotholes in cleats or battens				X		X	X	4.3.3
3.8	Wane and Divergency				X		X	X	4.3.3
3.8.1	Wane				X		X	X	4.3.3
3.8.2	Divergency of grain				X		X	X	4.3.3
3.9	Faceboards				X		X	X	4.3.3
3.9.1	Width of faceboards				X		X	X	4.3.3
3.9.2	Alternative faceboards				X		X	X	4.3.3
3.10	Thickness and width of cleats and battens								
3.10.1	Cleats				X		X	X	4.3.3
3.10.2	Battens				X		X	X	4.3.3
3.11	Binding wires				X		X	X	4.3.3
3.11.1	Coating				X		X	X	4.3.3
3.11.2	Diameter of wire				X		X	X	4.3.3
3.11.3	Wire spacing				X		X	X	4.3.3
3.11.4	Number of wires				X		X	X	4.3.3
3.11.5	Loop closures				X		X	X	4.3.3
3.12	Staples				X		X	X	4.3.3
3.12.1	Staple sizes				X		X	X	4.3.3
3.12.2	Staple spacing				X		X	X	4.3.3
3.13	Nails				X		X	X	4.3.3

Source: https://assist.dla.mil -- Downloaded: 2016-12-11T06:16Z
Check the source to verify that this is the current version before use.

TABLE III. Requirement/verification cross reference matrix continued

Section 3 Requirement		Verification Methods					Verification Class		Section 4 Method
		N/A	1	2	3	4	A	B	
3.13.1	Size and spacing of nails				X		X	X	4.3.3
3.13.2	Rope handles attachment				X		X	X	4.3.3
3.14	Box assembly inside dimensions				X		X	X	4.3.3
3.15	Fabrication								
3.15.1	Wood parts				X		X	X	4.3.3
3.15.2	Metal parts				X		X	X	4.3.3
3.15.3	Wires				X		X	X	4.3.3
3.16	End boards and end battens				X		X	X	4.3.3
3.17	Moisture content				X	X	X	X	4.5.1
3.18	Handles				X	X	X	X	4.5.2
3.18.1	Load test for handles					X	X	X	4.5.2.1
3.18.2	Jute rope handles								
3.18.2.1	Rope handles for 13/16 inch thick batten boxes				X		X	X	4.5.2.2
3.18.2.2	Rope handles for 1 1/8 inch thick batten boxes				X		X	X	4.5.2.2
3.18.3	Polypropylene rope handles				X	X	X	X	4.5.2.4
3.18.4	Polyethylene rope handles				X	X	X	X	4.5.2.4
3.18.5	Webbing handles				X		X	X	4.5.2.3
3.19	Preservative treatment				X	X	X	X	4.3.3
3.19.1	Presence of PQ56 preservative				X	X	X	X	4.5.3
3.19.2	Presence of M-GARD W550 preservative				X	X	X	X	4.5.4
3.19.3	Presence of M-GARD W510 or Cunapsol 5 preservative				X	X	X	X	4.5.5
3.20	Heat treatment				X	X	X	X	4.5.6
3.21	Box identification				X		X	X	4.5.7
3.22	Workmanship				X		X	X	4.5.8

4.1 Classification of inspections. The inspection requirements specified herein are classified as follows:

a. First article inspection (see 4.2)

b. Conformance inspection (see 4.3)

4.1.1 Verification conditions. Unless otherwise specified, all verifications shall be performed in accordance with the test methods and conditions specified in section 4.5.

4.1.2 Classification of characteristics. For examinations and tests cited herein or when required by contract; critical, major, and minor characteristics are defined in MIL-STD-1916.

4.1.3 Lot formation. Lot formation shall be in accordance with MIL-STD-1916.

Source: https://assist.dla.mil -- Downloaded: 2016-12-11T06:16Z
Check the source to verify that this is the current version before use.

4.2 First article inspection. When specified, a sample of sixty-five (65) wooden boxes shall be subjected to first article inspection in accordance with 4.2.2.

4.2.1 First article rejection. If any item of the sample fails to comply with the first article inspection requirements, the sample shall be rejected.

PARAGRAPH 4.2.2	TITLE Assembly	SHEET 1 OF 2		INSPECTION METHOD
Classification	EXAMINATION OR TEST	CONFORMANCE CRITERIA	REQUIREMENT PARAGRAPH	
Critical	None defined.			
Major				
101	Inside length, minimum	100%	3.14	Gage
102	Inside width, minimum	100%	3.14	Gage
103	Inside depth, minimum	100%	3.14	Gage
104	Decay exceeding 1/3 length or affecting serviceability of board cleat or batten	100%	3.8	Gage
105	Hazardous splinters or sharp edges projecting	100%	3.22	Visual
106	Bulged or buckled wires	100%	3.22	Visual
107	Wood species not conforming to specification	100%	3.3	Visual
108	Board broken cross grain affecting utility of box	100%	3.4	Visual
109	Split full length in cleat or batten	100%	3.6.1	Visual
110	Split forming sliver at edge of board	100%	3.6.2	Visual
111	Top and bottom overlap not less than 1/4 inch	100%	3.15.1	Gage
112	Binding wires broken or missing	100%	3.11	Visual
113	Prong of binding wires not driven into wood	100%	3.15.2	Visual
114	End of wire not clinched	100%	3.15.3	Visual
115	Improper staple size over outer and intermediate wires	100%	3.12.1	Gage
116	Broken staples, four or more per outer wire	100%	3.12	Visual
117	Protruding nails or staple points	100%	3.13	Visual
118	Wire or staples not galvanized	100%	3.11.1	Visual
119	Short loop (preventing closing of box)	100%	3.11.5	Visual
120	Flaking or peeling of galvanized coating	100%	3.11.1	Visual
121	Hazardous splinters, sharp edges protruding, or bulged or buckled wires	100%	3.22	Visual
122	Preservative treatment not completely dry	100%	3.19	Visual
123	Presence of heat treatment 2/	15	3.20	Visual
124	Load test of handles, rope or webbing	15	3.18.1	4.5.2.1
125	Determination of moisture content	15	3.17	4.5.1
126	Presence of wood preservative 1/	15	3.19	4.5.3, 4.5.4, 4.5.5
127	Binding wire tensile strength	N/A	3.11	3/
128	Stapling wire tensile strength	N/A	3.12	3/
Minor				
201	Inside length, maximum	100%	3.14	Gage
202	Inside width, maximum	100%	3.14	Gage
203	Inside depth, maximum	100%	3.14	Gage
204	Thickness of wood	100%	3.9	Gage
205	Width of cleats and battens	100%	3.10.1, 3.10.2	Gage
206	Wane on surface of board excessive	100%	3.8.1	Gage

Source: https://assist.dla.mil -- Downloaded: 2016-12-11T06:16Z
Check the source to verify that this is the current version before use.

PARAGRAPH 4.2.2	TITLE Assembly	SHEET 2 OF 2		INSPECTION METHOD
Classification	EXAMINATION OR TEST	CONFORMANCE CRITERIA	REQUIREMENT PARAGRAPH	
Minor				
207	Sound knot or cluster of knots larger than 1/3 width of wood	100%	3.7.1	Gage
208	Sound knot larger than 1/4 width of cleat	100%	3.7.2	Gage
209	Loose knot or knot hole larger than 5/8 inch in diameter in faceboards	100%	3.7.3	Gage
210	Knots closer than 1 1/4 inch from end of cleat or batten	100%	3.7.4	Gage
211	Diameter of loose knot or knot holes exceeding 1/4 width or depth of cleat or batten	100%	3.7.4	Gage
212	Divergence of grain exceeding 1 inch in 8 inches of length	100%	3.8.2	Gage
213	Opening between faceboard greater than 1/4 inch	100%	3.15	Visual
214	Cleat extending beyond faceboard surface	100%	3.15	Visual
215	Handle missing, not properly located or of improper pattern	100%	3.13.2	Visual
216	Marking misleading or unidentifiable	100%	3.21	Visual
217	Broken staples, four or more per intermediate wire	100%	3.12	Visual
218	Nail or staple missing	100%	3.13	Visual
219	Nail or stapling pattern not as required	100%	3.12.2, 3.13.1	Visual
220	Diameter of wire	100%	3.11.2	Gage/ Visual
221	Split full length (more than one for board 4 inches wide or less, or more than two for board greater than 4 inches wide)	100%	3.6.1	Gage/ Visual
222	Partial splits (less than 1/3 length of board not more than 3 in a board)	100%	3.6.3	Gage/ Visual
223	Overall width of faceboard, as applicable	100%	3.9.1	Gage
224	Number of wires	100%	3.11.4	Visual
225	Evidence of poor workmanship	100%	3.22	Visual

Notes:
1/ Select a sample of 15 Grade A boxes at random for this test. Subject four individual boards (cleat, faceboard, endboard and batten) of each box to the test specified.
2/ Select a sample of 15 boxes at random for this test. Examine the boxes for the presence of pests or evidence of infestation, for example worm holes. Any visual obvious infestation or evidence of infestation of any box in the sample lot shall be cause for rejection.
3/ A certification shall be delivered to show compliance with the tensile strength requirement.

4.3 Conformance inspection.

4.3.1 Conformance inspection. The sample boxes shall be subjected to conformance verification in accordance with 4.3.3.

4.3.2 Conformance rejection. If any sample fails to comply with the conformance inspection requirements, the lot shall be rejected.

Source: https://assist.dla.mil -- Downloaded: 2016-12-11T06:16Z
Check the source to verify that this is the current version before use.

PARAGRAPH 4.3.3	TITLE Assembly	SHEET 1 OF 2		INSPECTION METHOD
Classification	EXAMINATION OR TEST	CONFORMANCE CRITERIA	REQUIREMENT PARAGRAPH	
Critical	None defined.			
Major				
101	Inside length, minimum	Level IV	3.14	Gage
102	Inside width, minimum	Level IV	3.14	Gage
103	Inside depth, minimum	Level IV	3.14	Gage
104	Decay exceeding 1/3 length or affecting serviceability of board cleat or batten	Level IV	3.8	Gage
105	Hazardous splinters or sharp edges projecting	Level IV	3.22	Visual
106	Bulged or buckled wires	Level IV	3.22	Visual
107	Wood species not conforming to specification	Level IV	3.3	Visual
108	Board broken cross grain affecting utility of box	Level IV	3.4	Visual
109	Split full length in cleat or batten	Level IV	3.6.1	Visual
110	Split forming sliver at edge of board	Level IV	3.6.2	Visual
111	Top and bottom overlap not less than 1/4 inch	Level IV	3.15.1	Gage
112	Binding wires broken or missing	Level IV	3.11	Visual
113	Prong of binding wires not driven into wood	Level IV	3.15.2	Visual
114	End of wire not clinched	Level IV	3.15.3	Visual
115	Improper staple size over outer and intermediate wires	Level IV	3.12.1	Gage
116	Broken staples, four or more per outer wire	Level IV	3.12	Visual
117	Protruding nails or staple points	Level IV	3.13	Visual
118	Wire or staples not galvanized	Level IV	3.11.1	Visual
119	Short loop (preventing closing of box)	Level IV	3.11.5	Visual
120	Flaking or peeling of galvanized coating	Level IV	3.11.1	Visual
121	Hazardous splinters, sharp edges protruding, or bulged or buckled wires	Level IV	3.22	Visual
122	Preservative treatment not completely dry	Level IV	3.19	Visual
123	Presence of heat treatment 2/	15	3.20	Visual
124	Load test of handles, rope or webbing	15	3.18.1	4.5.2.1
125	Determination of moisture content	15	3.17	4.5.1
126	Presence of wood preservative 1/	15	3.19	4.5.3, 4.5.4, 4.5.5
127	Binding wire tensile strength	N/A	3.11	3/
128	Stapling wire tensile strength	N/A	3.12	3/
Minor				
201	Inside length, maximum	Level II	3.14	Gage
202	Inside width, maximum	Level II	3.14	Gage
203	Inside depth, maximum	Level II	3.14	Gage
204	Thickness of wood	Level II	3.9	Gage
205	Width of cleats and battens	Level II	3.10.1, 3.10.2	Gage
206	Wane on surface of board excessive	Level II	3.8.1	Gage
207	Sound knot or cluster of knots larger than 1/3 width of wood	Level II	3.7.1	Gage
208	Sound knot larger than 1/4 width of cleat	Level II	3.7.2	Gage

Source: https://assist.dla.mil -- Downloaded: 2016-12-11T06:16Z
Check the source to verify that this is the current version before use.

PARAGRAPH 4.3.3	TITLE Assembly	SHEET 2 OF 2		INSPECTION METHOD
Classification	EXAMINATION OR TEST	CONFORMANCE CRITERIA	REQUIREMENT PARAGRAPH	
Minor				
209	Loose knot or knot hole larger than 5/8 inch in diameter in faceboards	Level II	3.7.3	Gage
210	Knots closer than 1 1/4 inch from end of cleat or batten	Level II	3.7.4	Gage
211	Diameter of loose knot or knot holes exceeding 1/4 width or depth of cleat or batten	Level II	3.7.4	Gage
212	Divergence of grain exceeding 1 inch in 8 inches of length	Level II	3.8.2	Gage
213	Opening between faceboard greater than 1/4 inch	Level II	3.15	Visual
214	Cleat extending beyond faceboard surface	Level II	3.15	Visual
215	Handle missing, not properly located or of improper pattern	Level II	3.13.2	Visual
216	Marking misleading or unidentifiable	Level II	3.21	Visual
217	Broken staples, four or more per intermediate wire	Level II	3.12	Visual
218	Nail or staple missing	Level II	3.13	Visual
219	Nail or stapling pattern not as required	Level II	3.12.2, 3.13.1	Visual
220	Diameter of wire	Level II	3.11.2	Gage/ Visual
221	Split full length (more than one for board 4 inches wide or less, or more than two for board greater than 4 inches wide)	Level II	3.6.1	Gage/ Visual
222	Partial splits (less than 1/3 length of board not more than 3 in a board)	Level II	3.6.3	Gage/ Visual
223	Overall width of faceboard, as applicable	Level II	3.9.1	Gage
224	Number of wires	Level II	3.11.4	Visual
225	Season checks	Level II	3.5	Visual
226	Evidence of poor workmanship	Level II	3.22	Visual

Notes:
1/ Select a sample of 15 Grade A boxes at random for this test. Subject four individual boards (cleat, faceboard, endboard and batten) of each box to the test specified.
2/ Select a sample of 15 boxes at random for this test. Examine the boxes for the presence of pests or evidence of infestation, for example worm holes. Any visual obvious infestation or evidence of infestation of any box in the sample lot shall be cause for rejection.
3/ A certification shall be delivered to show compliance with the tensile strength requirement.

4.4 Examinations and tests. Reference shall be made to MIL-STD-1916 for the definition of critical, major, and minor defects. The attribute sampling plan required for the examination for defects in 4.3.3 shall be in accordance with MIL-STD-1916, using Verification Level IV for major characteristics and Level II for minor characteristics unless otherwise noted.

4.5 Methods of inspection.

4.5.1 Moisture content. The box shall be tested in accordance with ASTM D4442, except that two readings shall be taken from different panels of the box. Failure of the average of the two readings to meet the requirements shall be classified as a defect.

4.5.2 Handles. Handle material shall be visually inspected for compliance.

Source: https://assist.dla.mil -- Downloaded: 2016-12-11T06:16Z
Check the source to verify that this is the current version before use.

4.5.2.1 Load test of handles. Pack box with any suitable material until its gross weight is twice as great as its gross weight when packed with the item for which it was intended. For handles when the resulting weight of the packed box is 250 lbs or less, follow 4.5.2.1.1. For handles when the resulting weight is greater than 250 lbs. and not greater than 500 lbs, follow 4.5.2.1.2.

4.5.2.1.1 Rope handle load test (250 lbs or less). Suspend the box freely for one minute minimum from each rope handle in turn. In the event that one or both handles fail the requirement, the box shall be classed defective.

4.5.2.1.2 Rope handle load test (greater than 250 lbs to 500 lbs maximum). Suspend the box freely for one minute minimum from both rope handles (at once). In the event that one or both handles fail the requirement, the box shall be classified as a defective.

4.5.2.2 Jute rope handles.

4.5.2.2.1 Rope type. A certification shall be delivered to show compliance with T-R-650.

4.5.2.3 Webbing rope handles.

4.5.2.3.1 Rope type. A certification shall be delivered to show compliance with MIL-W-17337.

4.5.2.4 Polyethylene or polypropylene rope handles.

4.5.2.4.1 Rope weight per foot. A 12 yard sample of polyethylene or polypropylene rope shall be furnished. The sample rope shall be stretched with a load equal to 200 pounds multiplied by the diameter (inches squared). While the rope is under load, a 30 foot length shall be marked off, cut out and accurately weighted. The weight, in pounds per foot, shall be computed using the length measurement determined under load.

4.5.2.4.2 Rope breaking strength. A 75 foot sample of polyethylene or polypropylene rope shall be supplied cut into five pieces approximately equal in length. The breaking strength of the five samples of polyethylene or polypropylene rope submitted shall be determined (see 6.12). The average breaking strength shall be computed.

4.5.3 Presence of PQ56 (copper-8-quinolinolate) preservative. (see 6.10)

4.5.3.1 Materials and equipment. The materials and equipment required are as follows:

a. PQ check (indicator): The formulation contains 10 parts by weight of sodium diethyldithiocarbanate trihydrate and 90 parts by weight of distilled water.

b. Dropper: A glass tube eye dropper or equivalent shall be used.

4.5.3.2 Test procedure. Two drops of PQ Check indicator shall be applied to the wood surface. An immediate dark brown coloration and the spreading of the drops shall indicate PQ56 treatment.

4.5.4 Presence of M-GARD W550 (zinc naphthenate emulsifiable) preservative.

4.5.4.1 Materials and equipment. The materials and equipment required are as follows:

Source: https://assist.dla.mil -- Downloaded: 2016-12-11T06:16Z
Check the source to verify that this is the current version before use.

a. Reagent. Dissolve 0.1 grams of dithizone (diphenylthiocarbazone) in either 100 ml of methyl ethyl ketone or 100 ml of chloroform. Solutions may be stored for long periods of time.

b. Eye dropper. An ordinary glass tube eye dropper shall be used.

4.5.4.2 Test procedure. Five drops of the solution shall be applied to the wood surface. The indicator will turn red when zinc (M-GARD W550) is present. The color green indicated that the preservative is not present. Both colors fade quickly in the presence of light.

4.5.5 Presence of M-GARD W510 (copper naphthenate emulsiafiable) or Cunapsol 5 (copper naphthenate) preservative.

4.5.5.1 Materials and equipment.

a. Reagent. Dissolve 0.5 grams chrome azurol S concentrate and 5.0 grams sodium acetate in 80 ml of distilled water and then dilute further to 500 ml total with distilled water.

b. Sprayer. A common manual (fly) sprayer type applicator shall be used.

4.5.5.2 Test procedure. Spray solution over surface of dried wood. A deep blue color reveals the presence of copper (from the copper naphthenate).

4.5.6 Heat treatment. Visually inspect the heat treatment marking on each of the boxes for conformance to the applicable requirements, including content, legibility and location.

4.5.7 Box identification. Boxes shall be visually inspected for identification markings.

4.5.8 Workmanship. Boxes shall be visually inspected for the defects listed in 4.3.3 with a visual inspection method.

Source: https://assist.dla.mil -- Downloaded: 2016-12-11T06:16Z
Check the source to verify that this is the current version before use.

TYPE I BOX (Without rope handles)

TYPE II BOX (With rope handles)

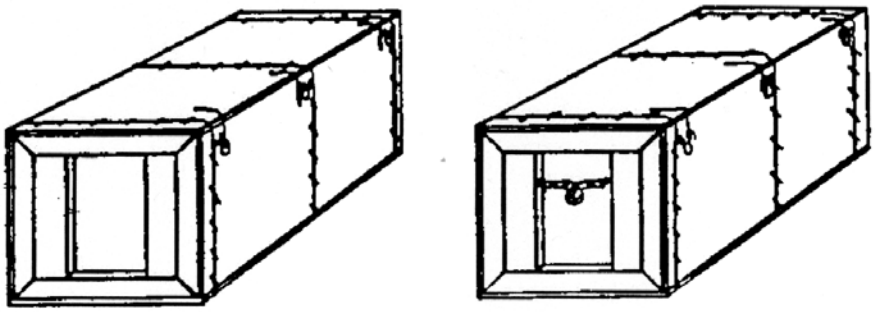

All boxes shall have top and bottom overlap (See 3.15.1) and Fig. 2

Two nails or two staples of size holding end boards to battens shall pass through center of rope as shown (See 3.13.2)

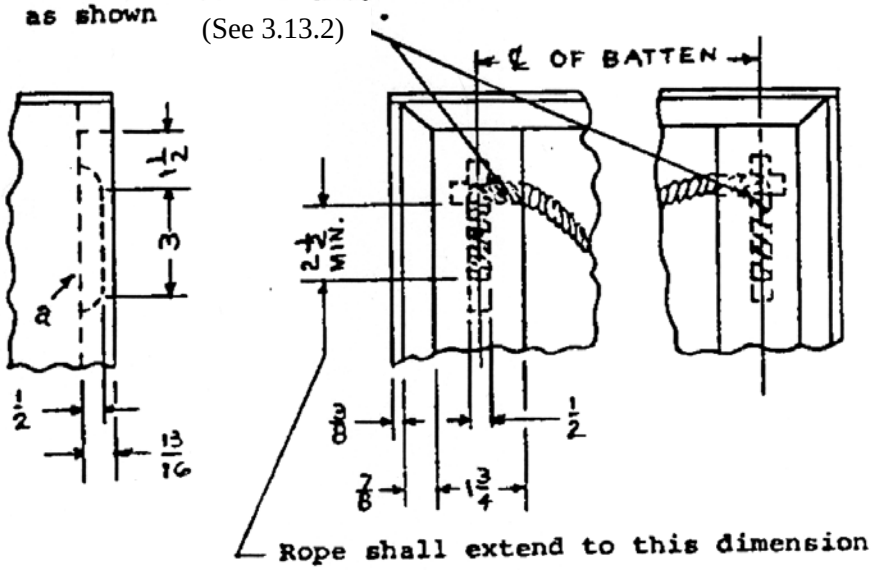

NOTES:

a. Routing dimensions may be 0.5” when 0.5” & 7/16” diameter rope is specified and 5/8” diameter when 5/8” diameter rope is required.

b. Cleat width, 13/16” or 1-1/8”, as specified by class of box.

c. See 3.12.2 for staple spacing of blank. On ends first nail or staple may be 0.75” to 1 inch from end of batten. (see Figure 2)

FIGURE 1. Type of wirebound boxes

Source: https://assist.dla.mil -- Downloaded: 2016-12-11T06:16Z
Check the source to verify that this is the current version before use.

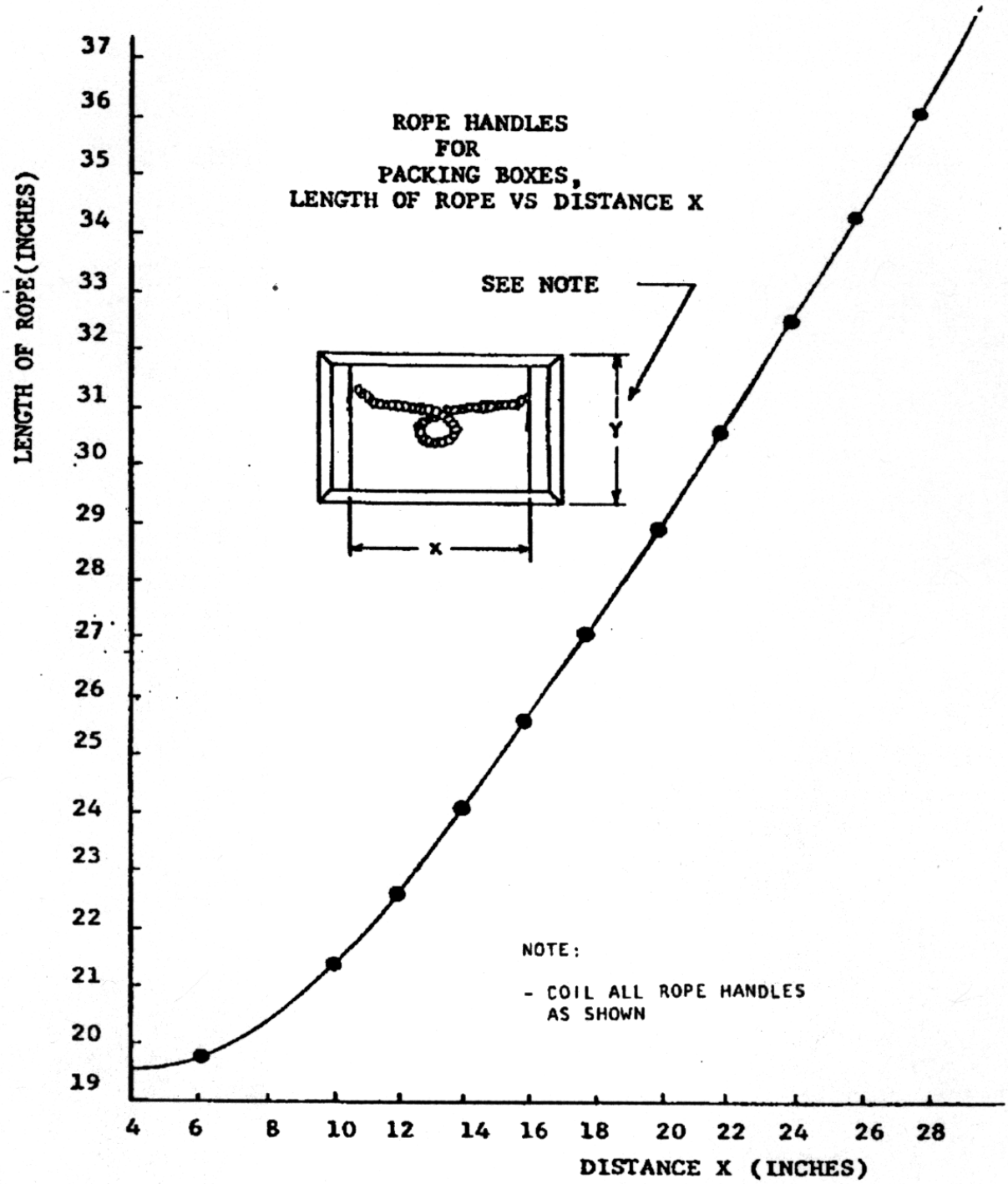

FIGURE 1A. Rope handles for packing boxes, length of rope vs. distance X

Source: https://assist.dla.mil -- Downloaded: 2016-12-11T06:16Z
Check the source to verify that this is the current version before use.

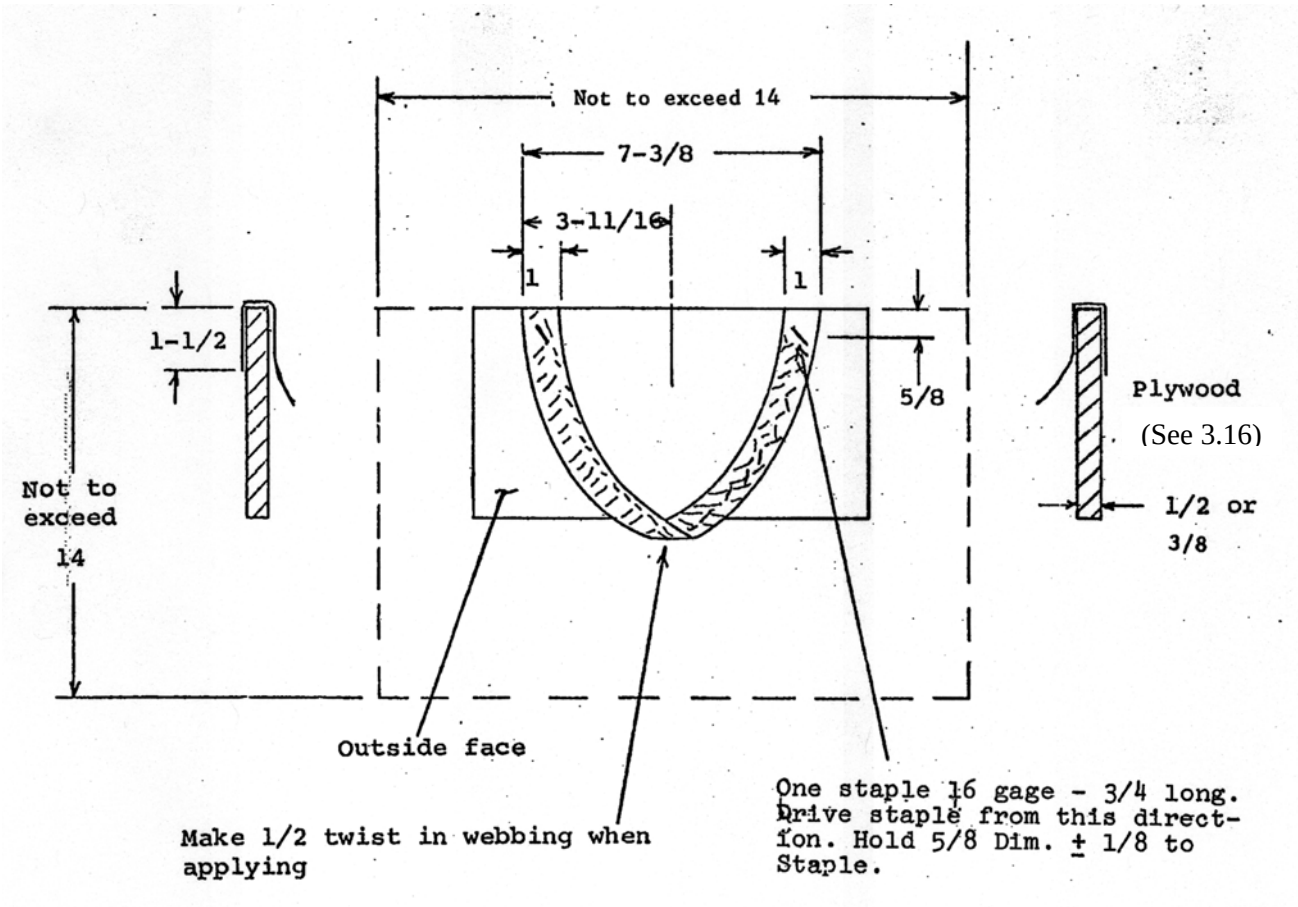

Webbing : 19” long – specification MIL-W-17337 (see 3.18.5)

FIGURE 1B. Ends for Type II Box (with webbing handles).

Source: https://assist.dla.mil -- Downloaded: 2016-12-11T06:16Z
Check the source to verify that this is the current version before use.

SEE NOTE b

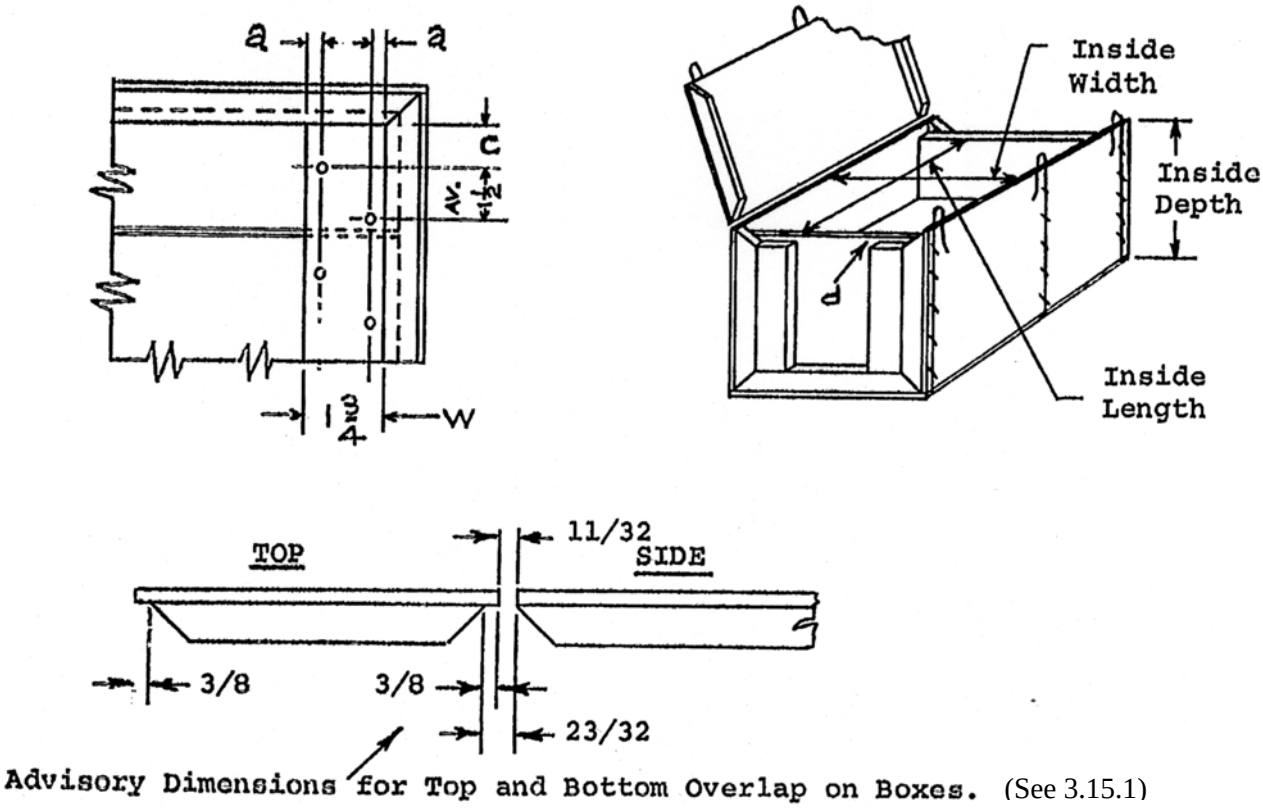

(See 3.15.1)

To determine outside dimensions:

To inside length - add twice the thickness of cleats and twice thickness of end boards.
To inside width - add 1-1/8" (includes closure on side of box).
To inside depth - add 1 inch.

NOTES:

a. 1/2 inch when w equals 1-3/4 inches, for greater widths b equals 5/8 inches
b. Nailing pattern shown for securing end boards to battens may be modified by locating top nail in opposite row provided nails are alternated as shown. Bottom nail may be located in inner or outer row as required.
c. 3/4 inches to 1 inch.
d. End boards project beyond edge of battens 7/8" (see 3.16) and beyond ends of battens 3/8" ± 1/16"

FIGURE 2. Wirebound box with end battens

Source: https://assist.dla.mil -- Downloaded: 2016-12-11T06:16Z
Check the source to verify that this is the current version before use.

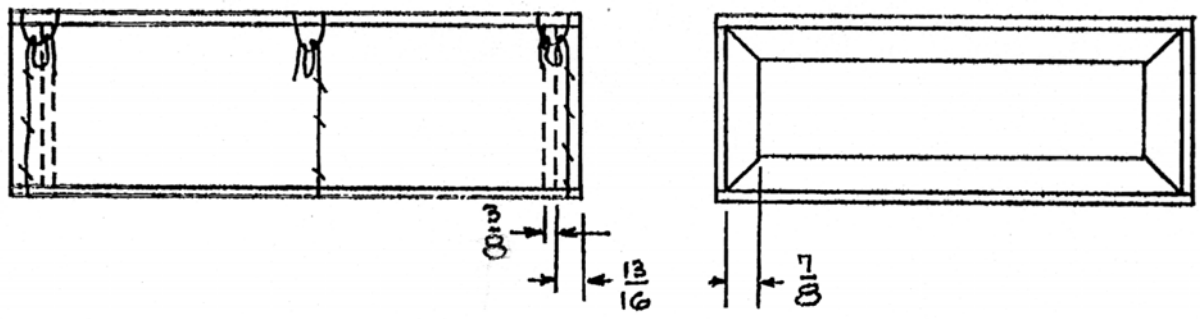

NOTES:
a. See Figures 1 and 2 for construction of box.
b. Unless otherwise specified all faceboards may be 3/8” thick, all cleats may be 13/16” x 7/8”. Ends may be one piece 3/8” thick plywood.

FIGURE 3. Type I Class 1 Box

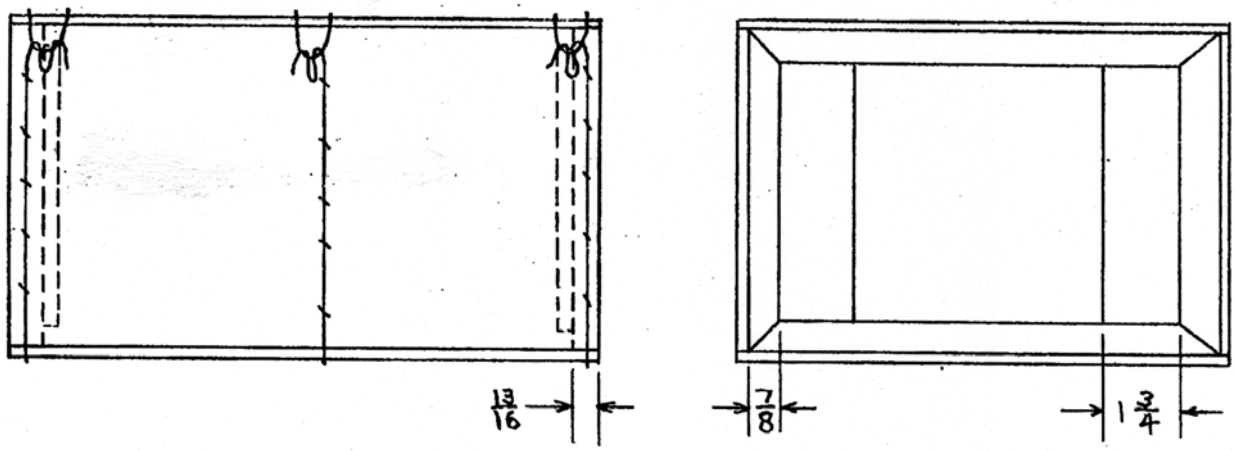

NOTES:
a. See Figures 1 and 2 for construction of box.
b. Unless otherwise specified all faceboards may be 3/8” thick, all cleats may be l3/l6” x 7/8” and all battens on ends may be 1-3/4” x 13/16” (see 3.15.1).

FIGURE 4. Type I Class 2 Box

Source: https://assist.dla.mil -- Downloaded: 2016-12-11T06:16Z
Check the source to verify that this is the current version before use.

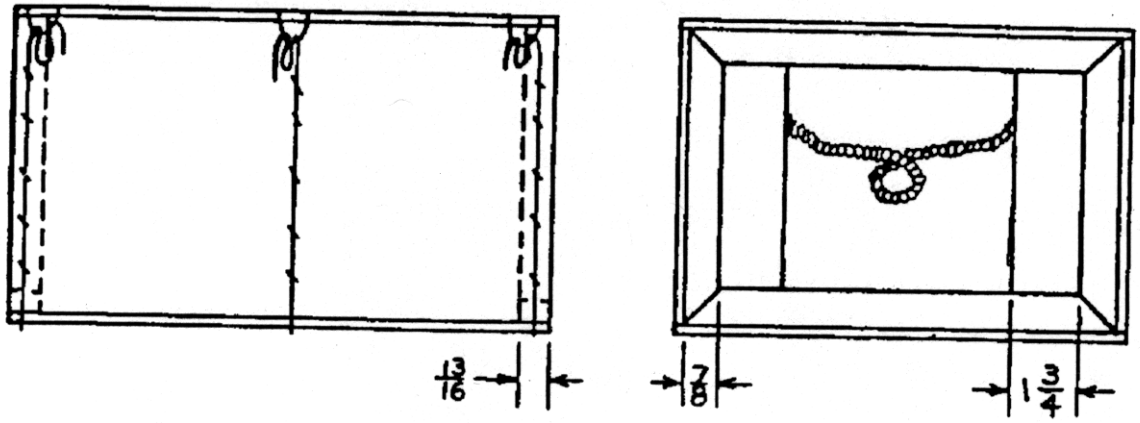

NOTES:
a. See Figures 1 and 2 for construction of box.
b. Unless otherwise specified all faceboards may be 3/8” thick, all cleats may be 13/16” x 7/8” and all battens on ends may be 1-3/4” x 13/16”.
c. See 3.18 for rope handle requirements. See Figure 1A for length of rope.

FIGURE 5. Type II Class 1 Box

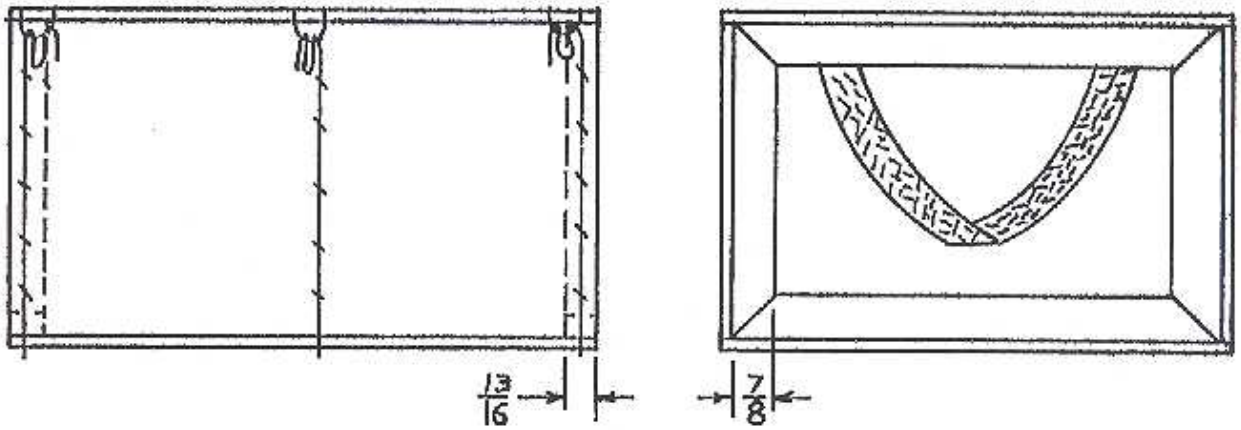

NOTES:
a. See Figures 1 and 2 for construction of box.
b. Unless otherwise specified all faceboards may be 3/8” thick and all cleats may be 13/16” x 7/8”. Ends may be 3/8” thick plywood.
c. See Figure 1B for webbing handle requirements.

FIGURE 6. Type II Class 2 Box

Source: https://assist.dla.mil -- Downloaded: 2016-12-11T06:16Z
Check the source to verify that this is the current version before use.

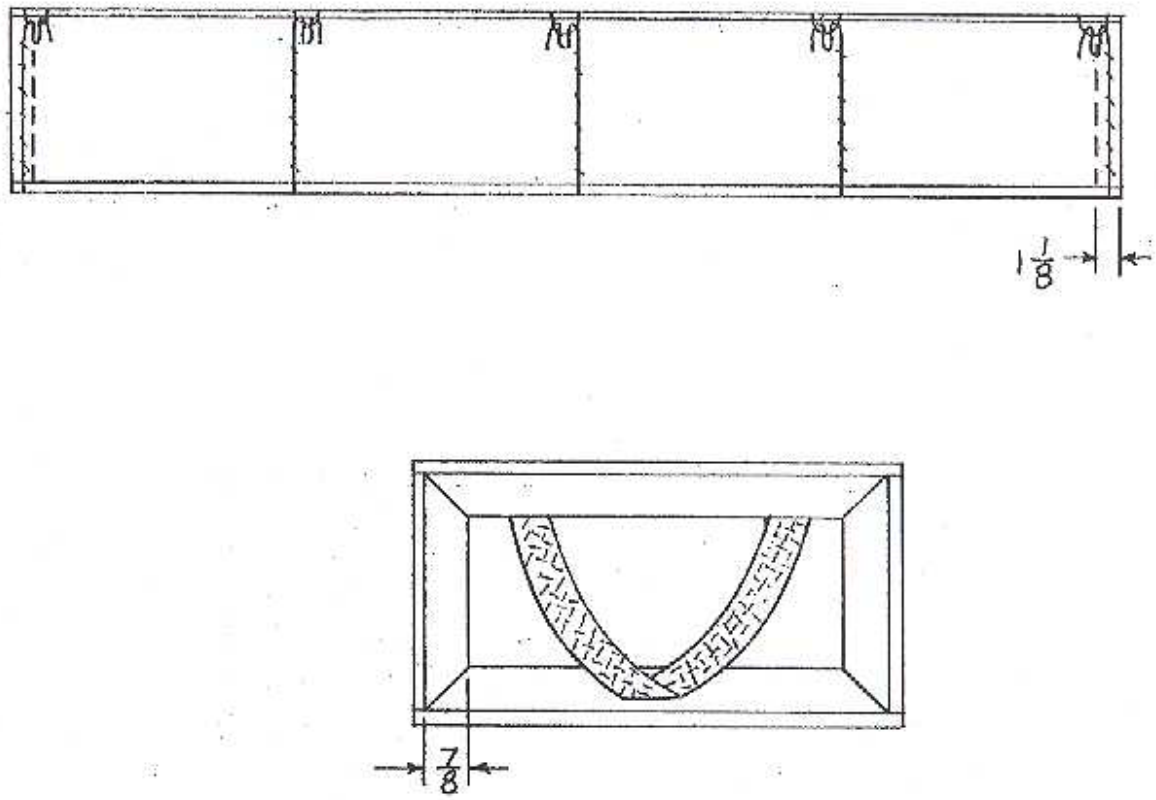

NOTES:
a. See Figures 1 and 2 for construction of box.
b. Unless otherwise specified all faceboards may be 3/8” thick, and all cleats may be 1-1/8” x 7/8”. Ends may be 1/2” thick plywood.
c. See Figure 1B for webbing handle requirements.

FIGURE 7. Type II Class 3 Box

Source: https://assist.dla.mil -- Downloaded: 2016-12-11T06:16Z
Check the source to verify that this is the current version before use.

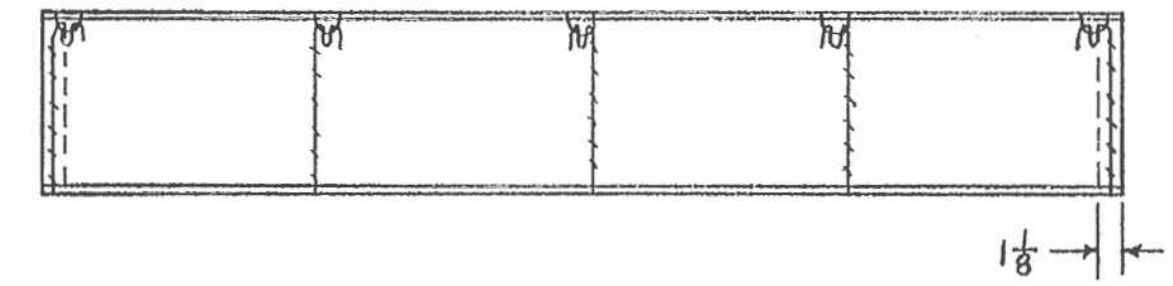

See Note d

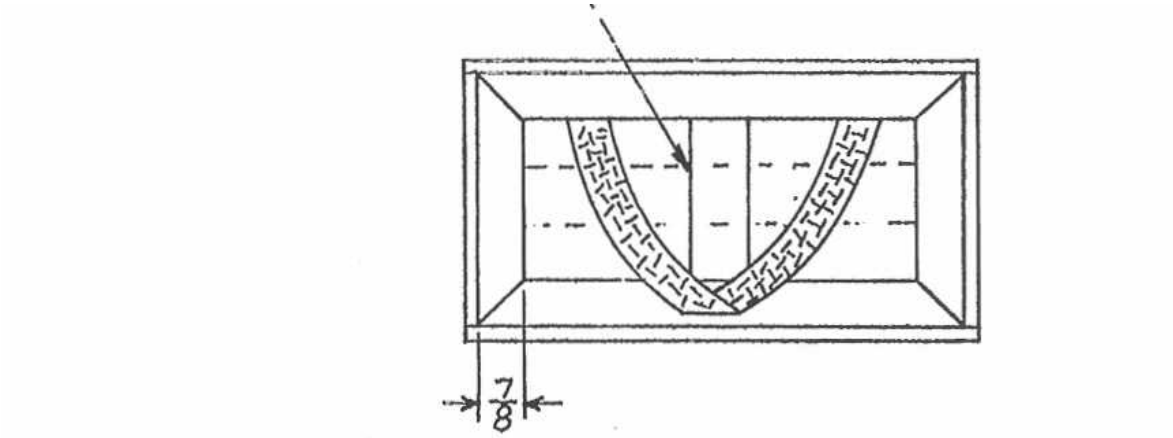

NOTES:
a. See Figures 1 and 2 for construction of box.
b. Unless otherwise specified all faceboards may be 3/8” thick, all cleats may be 1-1/8” x 7/8”, and all battens on ends may be 1-3/8” x 1-1/8”. All ends may be 1/2” thick plywood.
c. See Figure 1B for webbing handle requirements.
d. Vertical batten at centerline of end will be supplied unless horizontal batten at centerline is specified.

FIGURE 8. Type II Class 4 Box

Source: https://assist.dla.mil -- Downloaded: 2016-12-11T06:16Z
Check the source to verify that this is the current version before use.

MANUAL BOX ASSEMBLY

Forming of the box for loading may be accomplished by any one of the three methods shown below.

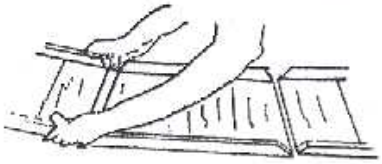

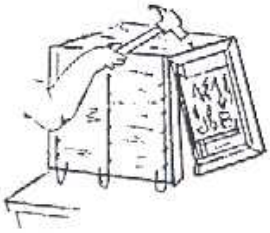

Lift side slightly before folding.
Fold box by raising sides at right angles to bottom.

METHOD 1 Drive 7d nails through side cleats to adjacent battens. Alternately 2 inch long 14° mechanically driven staples driven astride the binding wires may be used. The average spacing of nails or staples shall be 5" with a minimum of 2 nails or staples through each side cleat for any depth of box.

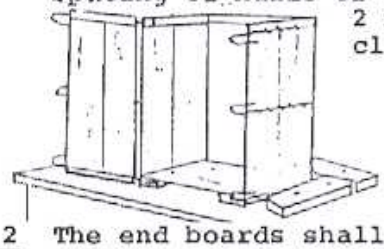

METHOD 2 The end boards shall be fastened to each side cleat by either nails or staples. Nails shall be not less than .076" diameter (14 1/2) Ga. Staples shall be not less than .0625" diameter (16°).

For manual assembly, nails shall be driven at an average spacing of 2". Staples shall be driven at an average spacing of 2 1/2". There shall be a minimum of 2 fastenings through the end into each side cleat for any depth box.

The length of each fastening shall not be less than the thickness of the end board, plus three quarters the thickness of the cleats. The points of the fastening shall not protrude from the cleats. 3d nails or 1" long staples satisfy this requirement.

METHOD 3 No nails or fasteners are required to attach ends to sides of box.

AUTOMATIC BOX ASSEMBLY

"For automatic box assembly-For boxes 14 inches and under in depth, one fastening (nail or staple) shall be driven through the end into each side cleat. Location of fastening is to be approximately halfway between the top and bottom edges of the end board and at approximate center of cleat. Boxes over 14 inches in depth, two fastenings shall be driven through the end into each side cleat. Location of the fastenings is to be approximately equally spaced between the top and bottom edges of the end board and at approximate center of cleat".

FIGURE 8A. Box assembly

Source: https://assist.dla.mil -- Downloaded: 2016-12-11T06:16Z
Check the source to verify that this is the current version before use.

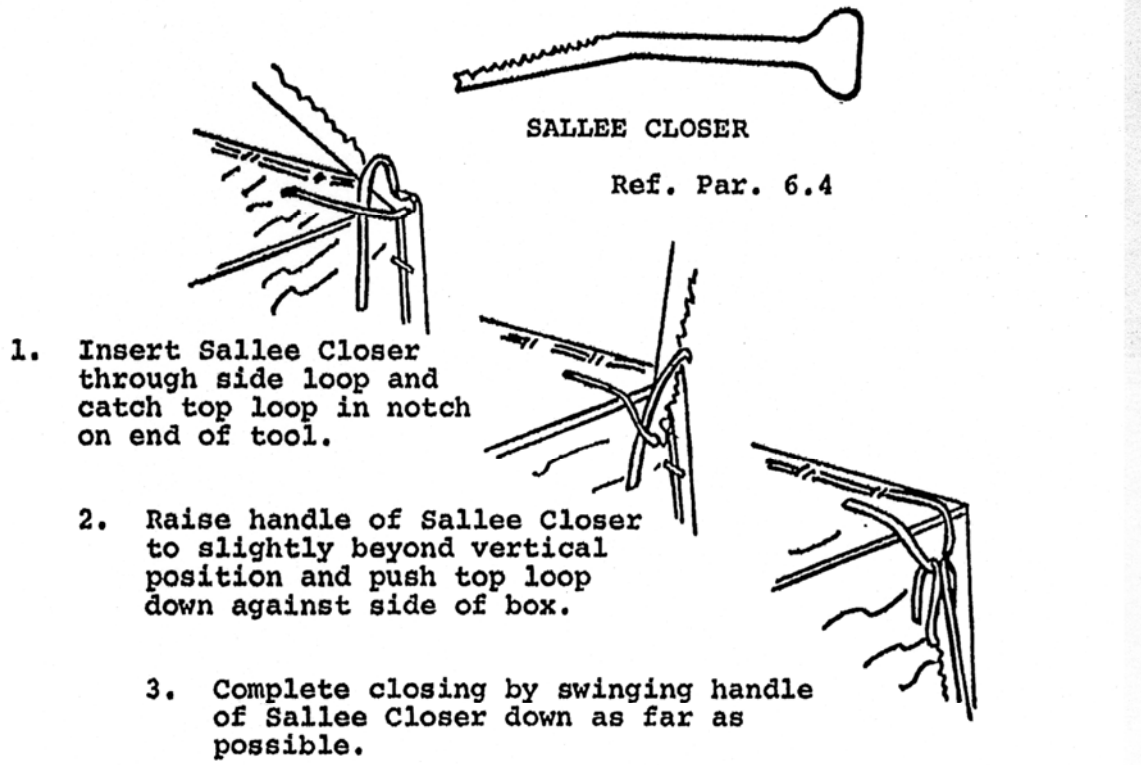

Sallee Closers are obtainable from any Wirebound Box supplier.

Looped Wire Closure Twisted Loop Closure

FIGURE 9. Method of closing loops

Source: https://assist.dla.mil -- Downloaded: 2016-12-11T06:16Z
Check the source to verify that this is the current version before use.

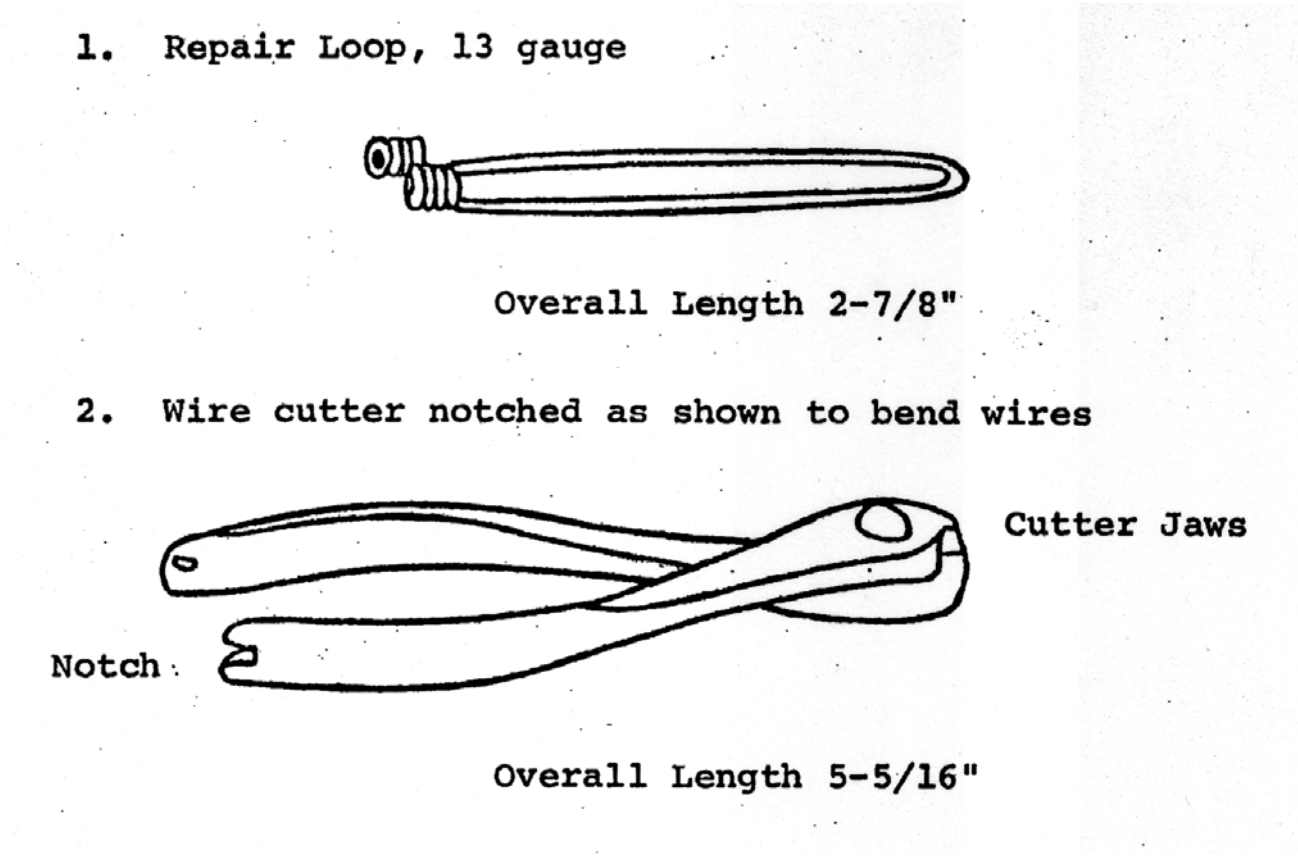

Note: Both items are available from Wirebound box manufacturers.

FIGURE 10. Repairing loop closures

Source: https://assist.dla.mil -- Downloaded: 2016-12-11T06:16Z
Check the source to verify that this is the current version before use.

1. Remove broken loop by cutting wire.

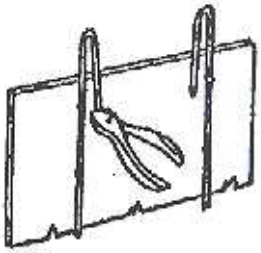

2. Cut first staple and release wire.

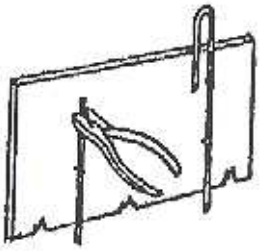

3. Slide one end of repair loop onto binding wire.

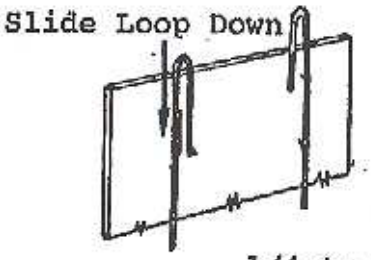

4. Place notch of cutter 1/4" to 3/8" from end of wire - and bend the wire into a half circle.

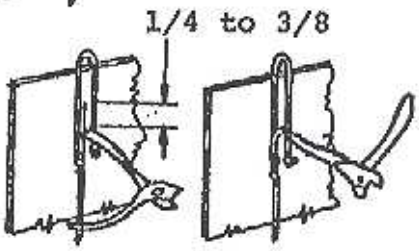

5. Insert bent end of wire into repair loop coil and slide loop up.

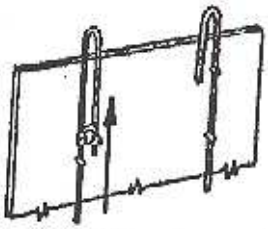

6. Lock the repair loop in place by giving the end of the wire a further bend.

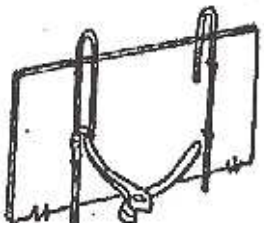

FIGURE 10A. Loop closure repair procedure

Source: https://assist.dla.mil -- Downloaded: 2016-12-11T06:16Z
Check the source to verify that this is the current version before use.

5. PACKAGING

5.1 Packaging. For acquisition purposes, the packaging requirements shall be as specified in the contract or order (see 6.2). When packaging of materiel is to be performed by DoD or in-house contractor personnel, these personnel need to contact the responsible packaging activity to ascertain packaging requirements. Packaging requirements are maintained by the Inventory Control Point's packaging activities within the Military Service or Defense Agency, or within the military service's system commands. Packaging data retrieval is available from the managing Military Department's or Defense Agency's automated packaging files, CD-ROM products, or by contacting the responsible packaging activity.

6. NOTES

(This section contains information of a general or explanatory nature that may be helpful, but is not mandatory.)

6.1 Intended use. Wood, wirebound, ammunition packing boxes covered by this specification are intended for shipment of ammunition, components, bombs accessories, rockets grenades, pyrotechnics, mines, jatos, guided missiles, demolition materials, special weapons components, and cartridge activated devices.

6.1.1 Grade A boxes are preservative and heat treated boxes for unrestricted overseas shipment or long term storage and handling of ammunition or explosive ammunition components.

6.1.2 Grade B boxes are heat treated non-preservative treated boxes for overseas shipment and short term storage and handling of ammunition or explosive ammunition components.

6.1.3 Grade C boxes are boxes without preservative or heat treatment. For interplant shipment and for storage and handling under controlled conditions of ammunition or explosive ammunition or explosive ammunition components, for domestic shipment only.

6.2 Acquisition requirements. Acquisition documents should specify the following:

a. Title, number and date of this specification and all reference documentation cited in this specification (see 2.2.1). Note, reference documents will be those current at the time of solicitation or contract.

b. Requirements for submission of first article sample (if applicable).

c. Type, class and grade of box according to the title and number specified in this specification and applicable drawing.

d. Inside dimension in inches to the nearest 1/16 inch in order of length, by width and by depth.

e. Net weight of intended contents unless referenced on applicable drawing.

f. Requirements for acceptance inspection equipment designs (see 6.7).

6.3. Definitions.

Source: https://assist.dla.mil -- Downloaded: 2016-12-11T06:16Z
Check the source to verify that this is the current version before use.

6.3.1 Decay. Decay is disintegration of wood due to action of fungi. In the shop, decay can be best detected and differentiated from harmless stains and discoloration by use of the pick test. The pick test is performed with a knife or chisel by lifting some of the grain fibers in suspicious-looking areas. If the material is punky or more brash (breaks without splintering) than healthy wood of the same species, it is probably decayed. Suspicious areas are usually abnormally brown, bleached looking or mottled and indicated by the absence of luster that is present in normal wood.

6.3.2 Wane. Wane is bark or de-barked areas which may appear at the edge of the board.

6.4 Repair loops. Wire loops may be repaired as shown in Figure 10 and 10A if they are broken in service.

6.5 Assembly and closure. Maximum performance will not be obtained from boxes made in accordance with this specification unless they are correctly assembled and closed. The correct methods are illustrated in Figures 8A and 9. If other tools than the Sallee Closer are used, it should be determined that the closure obtained is similar in all respects, i.e., tightness of wire, foldover of loops, radius of bends of the wire.

6.6 Other fastenings. One type of fastener that has been found satisfactory is formed by a machine from a roll of knurled wire. The machine cuts the wire to the desired length, drives it through the pieces to be fastened, and makes a clinch and small head. In most instances, it will be found necessary to use 1-1/2 times as many of these fasteners as nails to be equivalent to the requirements of 3.13.1.

6.7 Submission of contractor inspection designs for approval. Contractor should submit copies of designs as required to: Commander, US Army ARDEC, ATTN: AMSRD-AAR-QEM, Picatinny, NJ, 07806-5000.

6.8 Submission of test methods for approval. Submit copies of test methods for approval to: Commander, US Army ARDEC, ATTN: AMSRD-AAR-QEM, Picatinny, NJ, 07806-5000. These methods should include but not be limited to the accuracy and precision of the method, test data demonstrating the accuracy and precision and drawings of any special equipment required.

6.9 Heat treatment. The box manufacturer should be affiliated with an inspection agency accredited by the United States Department of Agriculture.

6.10 Alternative method to check presence of PQ56 (copper-8-quinolinolate) preservative.

6.10.1 Materials and equipment.

a. Reagent. Dissolve 0.5 grams chrome azurol S concentrate and 5.0 grams sodium acetate in 80 ml of distilled water and then dilute further to 500 ml total with distilled water.
b. Sprayer. A common manual (fly) sprayer type applicator should be used.

6.10.2 Test procedure. Spray solution over surface of dried wood. A deep blue color reveals the presence of copper (from the copper-8-quinolinolate).

6.11 Submission of safety, health and environmental data. Submission of all available safety, health and environmental data such as Hazard Data Sheets and OSHA Safety Data Sheet is required. Of specific interest is the acute, subchronic and chronic toxicity data. Also submission of special safety, health and environmental information (apparatus and procedures) to be used throughout the treated box duty life and disposal is required.

Source: https://assist.dla.mil -- Downloaded: 2016-12-11T06:16Z
Check the source to verify that this is the current version before use.

6.12 Rope breaking force test method. The following should be used to determine the breaking force of a rope.

6.12.1 Apparatus.

a. Tensile testing machine meeting the following requirements:

a.1 The rate of travel of the pulling cross head during the breaking force test may be such that, after precycling the rope as described in 6.12.2.2, the rope is loaded to 20% of its estimated breaking force in not less than 20 seconds nor more than 200 seconds. The rate of travel of the pulling head may be adjusted during the precycling to achieve this rate.

a.2 The stroke and bed length of the testing machine may be long enough to extend the rope specimen to rupture in one continuous pull without interruption. With prior agreement of the purchaser and supplier, the splice procedure and splice eye size may be modified, if this will allow the test machine to accommodate the prescribed length of rope between splices.

a.3 The holding and pulling ends of the testing machine should have pins or posts whose diameters are no less than one and one half times the diameter of the rope being tested when using eye splice terminations.

a.4 The stroke of the testing machine (the total distance the cross head will move) must be long enough to extend the rope specimen to rupture in one continuous pull.

a.5 The testing machine should be equipped with a force indicating device such as a dial, digital read-out, or digital recorder; so that the maximum force required to rupture the specimen will remain on the indicator.

a.6 The testing machine should be calibrated at least once a year.

b. Fids of appropriate design and size to aid in eye splicing of the rope specimen.

6.12.2 Procedure.

a. The length of undisturbed rope between the splices or other terminations may be a minimum of 1500 millimeters (5 feet) for ropes up to 125 millimeters (5 inches) circumference and a minimum of at least 12 times the rope circumference for larger ropes.

a.1 For splicable ropes, the test specimens should be terminated with splices. For three-strand laid ropes, the minimum number of tucks for each splice should of four full tucks, one 2/3 tuck and one 1/3 tuck. For eight –strand plaited ropes, the minimum number of tucks for each splice should consist of two double and two single tucks. For braided ropes and any special rope constructions, consult with the rope manufacturer or the Cordage Institute for the necessary splicing instructions. Note: poor splicing can result in poor test results which do not reflect the actual breaking force of the rope. It is essential that the person preparing the specimen for test be trained properly and be experienced in the art of splicing rope so that the splicing is done properly and with good workmanship.

a.2 The inside length of each eye splice, measured with the insides of the eyes in contact, should be at least twice the pin diameter around which the eye will be placed on the test machine. The results of a

Source: https://assist.dla.mil -- Downloaded: 2016-12-11T06:16Z
Check the source to verify that this is the current version before use.

rope break which occurs in the tucked portion of the rope specimen may be disregarded and another rope tested.

a.3 If agreed to in advance, blocks, clamps, grips or any other suitable means may be used in the above procedure instead of eye splices and pins to hold the test specimen while subjecting the rope to the test break. If a dispute arises concerning the test results using blocks, grips or any other holding mechanism, make the test with eye spliced rope.

b.1 Cycle the rope ten times to 20% of the estimated breaking force. During this precycling, the rate of travel of the testing machine moving cross head may be adjusted to achieve the required rate of travel prescribed in 6.12.1.1.1.

b.2 At the beginning of cycling, during the tenth cycle, after the tenth cycle and after the 30 minutes waiting period, measure the elongation and extension distances.

b.3 Increase the force in the rope until it breaks, at the rate of moving cross head travel prescribed in 6.12.1.1.1. Record the force at which the rope breaks and the maximum force applied to the rope, if higher than this breaking force.

b.4 Calculate the non-elastic elongation, residual elongation, recoverable elongation, total elongation, working elongation, and extension all to the nearest 0.1%.

6.12.3 Report. Report the following information:

a. State that the break test was made as directed. Describe the rope tested and the method of sampling used.

b. The specific method used for holding the specimen in the testing machine, the type of straining mechanism used and the rate of travel of the cross head.

c. The purchase order or contract number.

d. The number of cycles, applied load, elongations and extensions.

e. The breaking force of the specimen in kilonewtons or pound force.

f. The ambient temperature and per cent relative humidity prevalent during testing

6.13 Changes from previous issues. Marginal notations are not used in this revision to identify changes with respect to the previous issues due to the extent of the changes.

6.14 Subject term (key word) listing.

Container
Lumber
Cleats
Staples
Battens

Source: https://assist.dla.mil -- Downloaded: 2016-12-11T06:16Z
Check the source to verify that this is the current version before use.

Custodian:
Army-AR
Navy - OS

Preparing activity:
Army-AR
(Project 8140-2009-005)

Review activity:
Navy- MC

NOTE: The activities listed above were interested in this document as of the date of this document. Since organizations and responsibilities can change, you should verify the currency of the information above using ASSIST Online database at http://assist.daps.dla.mil.

Source: https://assist.dla.mil -- Downloaded: 2016-12-11T06:16Z
Check the source to verify that this is the current version before use.