METRIC

MIL-STD-2042-5B(SH)
25 July 2002
SUPERSEDING
MIL-STD-2042-5A(SH)
29 September 1997
MIL-STD-2042-5(SH)
7 July 1993

DEPARTMENT OF DEFENSE
STANDARD PRACTICE

FIBER OPTIC CABLE TOPOLOGY INSTALLATION STANDARD METHODS FOR NAVAL SHIPS (CONNECTORS AND INTERCONNECTIONS)

(PART 5 OF 7 PARTS)

AMSC N/A AREA SESS

DISTRIBUTION STATEMENT A. Approved for public release; distribution is unlimited.

Source: https://assist.dla.mil -- Downloaded: 2016-12-10T08:03Z
Check the source to verify that this is the current version before use.

FOREWORD

1. This Department of Defense Standard Practice is approved for use by the Naval Sea Systems Command, Department of the Navy, and is available for use by all Departments and Agencies of the Department of Defense.

2. Beneficial comments (recommendations, additions, deletions) and any pertinent data which may be of use in improving this document should be addressed to Department of the Navy, Naval Sea Systems Command, ATTN: SEA 05Q, 1333 Isaac Hull Avenue Southeast, Stop 5160, Washington Navy Yard, DC 20376-5160 by using the self-addressed Standardization Document Improvement Proposal (DD Form 1426) appearing at the end of this document or by letter.

3. This standard practice provides detailed information and guidance to personnel concerned with the installation of fiber optic cable topologies (optical fiber cabling and associated components) on Naval surface ships and submarines. The methods specified herein are not identifiable to any specific ship class or type, but are intended to standardize and minimize variations in installation methods to enhance the compatibility of the installations on all Naval ships.

4. In order to provide flexibility in the use and update of the installation methods, this standard practice is issued in eight parts; the basic standard practice and seven numbered parts as follows:

Part 1 Cables
Part 2 Equipment
Part 3 Cable Penetrations
Part 4 Cableways
Part 5 Connectors and Interconnections
Part 6 Tests
Part 7 Pierside Connectivity Cable Assemblies and Interconnection Hardware

Source: https://assist.dla.mil -- Downloaded: 2016-12-10T08:03Z
Check the source to verify that this is the current version before use.

CONTENTS

PARAGRAPH		PAGE
1.	SCOPE	1
1.1	Scope	1
1.1.1	Applicability	1
2.	APPLICABLE DOCUMENTS	2
2.1	General	2
2.2	Government documents	2
2.2.1	Specifications, standards and handbooks	2
2.2.2	Other government documents	3
2.3	Non-government publications	3
2.4	Order of precedence	3
3.	DEFINITIONS	4
3.1	General fiber optics terms	4
3.2	Acronyms	4
3.3	Authorized approval.	4
3.4	BOF bundle	4
3.5	BOF fiber	4
3.6	BOF tube	4
3.7	End user equipment	4
3.8	Fiber optic cable plant	4
3.9	Fiber optic cable topology	4
3.10	Fiber optic interconnection box	4
3.11	Installing activity	4
3.12	Local cable	4
3.13	Minimum bend diameter	5
3.14	Optical fiber cable	5
3.15	Optical fiber cable component (OFCC).	5
3.16	Outlet box.	5
3.17	Trunk	5
3.18	Trunk cable	5
3.19	Tube furcation unit	5
4.	GENERAL REQUIREMENTS	6
4.1	Optical fiber cable interconnection	6
4.1.1	Interconnection component selection	6
4.2	Fiber connectors	6
4.2.1	Installation	6
4.3	Fiber optic splices	7
4.3.1	Installation	7
4.4	Tests	7
4.5	Safety precautions	7
5.	DETAILED REQUIREMENTS	9
5.1	Heavy-duty connector installation	9
5.1.1	Heavy-duty connectors with removable backshells	9
5.1.2	Heavy-duty connectors with integral backshells	9
5.1.3	Heavy-duty connectors with insert retention nuts	9
5.1.4	Heavy-duty connectors with light duty strain relief	9
5.2	Light duty connector installation	9
5.3	Mechanical (rotary) splice installation	9
5.4	COTS light duty connector installation	9

Source: https://assist.dla.mil -- Downloaded: 2016-12-10T08:03Z
Check the source to verify that this is the current version before use.

CONTENTS

PARAGRAPH		PAGE
6.	NOTES	10
6.1	Intended use	10
6.2	Issue of DODISS	10
6.3	Standard method designation	10
6.4	Subject term (key word) listing	10
6.5	Changes from previous issue	10

METHOD		
5A1	Multiple terminus connector installation	5A1-1
5B1	Single terminus connector installation	5B1-1
5C1	Mechanical splice ferrule installation	5C1-1

TABLE		PAGE
5A1-I	Equipment and materials	5A1-1
5A1-II	Cable stripping dimensions	5A1-5
5A1-III	Equipment and materials	5A1-22
5A1-IV	Cable stripping dimensions	5A1-42
5A1-V	Equipment and materials	5A1-60
5B1-I	Equipment and materials	5B1-1
5C1-I	Equipment and materials	5C1-1

FIGURE		
5A1-1	Backshell parts on the cable (straight backshell).	5A1-4
5A1-2	Cable stripping dimensions.	5A1-5
5A1-3	Mixing the epoxy.	5A1-7
5A1-4	Injecting epoxy into the terminus.	5A1-8
5A1-5	Inserting the fiber into the terminus.	5A1-9
5A1-6	Inserting a terminus in a cure adapter.	5A1-10
5A1-7	Termini in the curing oven.	5A1-10
5A1-8	Scoring the fiber.	5A1-11
5A1-9	Placing the terminus in the insertion tool.	5A1-12
5A1-10	Inserting the terminus in the polishing tool.	5A1-12
5A1-11	Removing the terminus from the polishing tool.	5A1-13
5A1-12	Scoring the fiber.	5A1-14
5A1-13	Placing the terminus in the insertion tool.	5A1-15
5A1-14	Inserting the terminus in the polishing tool.	5A1-15
5A1-15	Removing the terminus from the polishing tool.	5A1-17
5A1-16	Removing the terminus from the polishing tool.	5A1-18
5A1-17	Quality check.	5A1-18
5A1-18	Installing the terminus in the insert.	5A1-19
5A1-19	Installing the alignment sleeve.	5A1-20
5A1-20	Removing the terminus from the insert.	5A1-21
5A1-21	Strain relief parts on the cable.	5A1-26
5A1-22	Installing the O-ring.	5A1-27
5A1-23	Tightening the kevlar compression nut.	5A1-28
5A1-24	Strain relief parts on the cable.	5A1-29
5A1-25	Installing the O-ring.	5A1-31
5A1-26	Strain relief parts on the cable.	5A1-33
5A1-27	Installing the O-ring.	5A1-34
5A1-28	Tightening the kevlar compression nut.	5A1-35
5A1-29	Strain relief parts on the cable.	5A1-37
5A1-30	Installing the O-ring.	5A1-38
5A1-31	Tightening the kevlar compression nut.	5A1-40

Source: https://assist.dla.mil -- Downloaded: 2016-12-10T08:03Z
Check the source to verify that this is the current version before use.

CONTENTS

FIGURE		PAGE
5A1-32	Cable stripping dimensions.	5A1-42
5A1-33	Mixing the epoxy.	5A1-44
5A1-34	Injecting epoxy into the terminus.	5A1-44
5A1-35	Inserting the fiber into the terminus.	5A1-45
5A1-36	Inserting a terminus in a cure adapter.	5A1-46
5A1-37	Termini in the curing oven.	5A1-47
5A1-38	Scoring the fiber.	5A1-48
5A1-39	Placing the terminus in the insertion tool.	5A1-48
5A1-40	Inserting the terminus in the polishing tool.	5A1-49
5A1-41	Removing the terminus from the polishing tool.	5A1-50
5A1-42	Scoring the fiber.	5A1-51
5A1-43	Placing the terminus in the insertion tool.	5A1-51
5A1-44	Inserting the terminus in the polishing tool.	5A1-52
5A1-45	Removing the terminus from the polishing tool.	5A1-53
5A1-46	Removing the terminus from the polishing tool.	5A1-54
5A1-47	Quality check.	5A1-55
5A1-48	Installing the spacing shafts.	5A1-55
5A1-49	Installing the terminus in the insert.	5A1-56
5A1-50	Installing the alignment sleeve.	5A1-57
5A1-51	Removing the terminus from the insert.	5A1-58
5A1-52	Assembling the backshell.	5A1-58
5A1-53	Mixing the epoxy.	5A1-63
5A1-54	Injecting epoxy into the terminus.	5A1-64
5A1-55	Inserting the fiber into the terminus.	5A1-65
5A1-56	Inserting a terminus in a cure adapter.	5A1-66
5A1-57	Termini in the curing oven.	5A1-66
5A1-58	Scoring the fiber.	5A1-67
5A1-59	Placing the terminus in the insertion tool.	5A1-68
5A1-60	Inserting the terminus in the polishing tool.	5A1-68
5A1-61	Removing the terminus from the polishing tool.	5A1-69
5A1-62	Scoring the fiber.	5A1-70
5A1-63	Placing the terminus in the insertion tool.	5A1-71
5A1-64	Inserting the terminus in the polishing tool.	5A1-71
5A1-65	Removing the terminus from the polishing tool.	5A1-73
5A1-66	Removing the terminus from the polishing tool.	5A1-74
5A1-67	Quality check.	5A1-74
5A1-68	Installing the terminus in the insert.	5A1-75
5A1-69	Installing the alignment sleeve.	5A1-76
5A1-70	Removing the terminus from the insert.	5A1-77
5B1-1	Installing the identification sleeve and connector boot – (typical)	5B1-3
5B1-2	Prepared OFCC dimensions for Lucent connectors.	5B1-4
5B1-3	Prepared OFCC dimensions for Fiber Systems International connectors.	5B1-4
5B1-4	Mixing the epoxy.	5B1-5
5B1-5	Injecting epoxy into the connector.	5B1-6
5B1-6	Applying epoxy to the connector barrel.	5B1-7
5B1-7	Inserting the fiber into the connector.	5B1-7
5B1-8	Sliding the crimp sleeve over the connector barrel.	5B1-8
5B1-9	Crimping the connector.	5B1-8
5B1-10	Scoring the fiber.	5B1-10
5B1-11	Inserting the connector into the polishing tool.	5B1-11
5B1-12	Polishing the connector.	5B1-12
5B1-13	Scoring the fiber.	5B1-13

Source: https://assist.dla.mil -- Downloaded: 2016-12-10T08:03Z
Check the source to verify that this is the current version before use.

CONTENTS

FIGURE		PAGE
5B1-14	Inserting the connector into the polishing tool.	5B1-14
5B1-15	Quality check.	5B1-15
5C1-1	Injecting adhesive into the ferrule.	5C1-4
5C1-2	Inserting the fiber into the ferrule.	5C1-5
5C1-3	Positioning the curing lamp.	5C1-5
5C1-4	Scoring the fiber.	5C1-6
5C1-5	Removing the excess adhesive.	5C1-7
5C1-6	Polishing the ferrule.	5C1-8
5C1-7	Quality check.	5C1-9

Source: https://assist.dla.mil -- Downloaded: 2016-12-10T08:03Z
Check the source to verify that this is the current version before use.

1. SCOPE

1.1 Scope. This standard practice provides detailed methods for installing optical fiber cable connectors and interconnecting devices.

1.1.1 Applicability. These criteria apply to installations on specific ships when invoked by the governing ship specification or other contractual document. They are intended primarily for new construction; however, they are also applicable for conversion or alteration of existing ships. The rapidly changing state of the art in fiber optic technology makes it essential that some degree of flexibility be exercised in enforcing this document. Where there is a conflict between this document and the ship specification or contract, the ship specification or contract takes precedence. Where ship design is such that the methods herein cannot be implemented, users should submit new methods or modifications of existing methods for approval prior to implementation to: Department of the Navy, Naval Surface Warfare Center, Dahlgren Division, ATTN: Code B35, 17320 Dahlgren Road, Dahlgren, VA 22448-5100.

Source: https://assist.dla.mil -- Downloaded: 2016-12-10T08:03Z
Check the source to verify that this is the current version before use.

2. REFERENCED DOCUMENTS

2.1 General. The documents listed in this section are specified in sections 3, 4 and 5 of this standard. This section does not include documents cited in other sections of this standard or recommended for additional information or as examples. While every effort has been made to ensure the completeness of this list, document users are cautioned that they must meet all specified requirements documents cited in sections 3, 4 and 5 of this standard, whether or not they are listed.

2.2 Government documents.

2.2.1 Specifications, standards and handbooks. The following specifications, standards and handbooks form a part of this document to the extent specified herein. Unless otherwise specified, the issues of these documents are those listed in the Department of Defense Index of Specifications and Standards (DODISS) and supplements thereto, cited in the solicitation (see 6.2).

FEDERAL SPECIFICATIONS

A-A-00272 - Caulking Compounds.
A-A-59730 - Plugs, Tapered Tube, Blown Optical Fiber.

DEPARTMENT OF DEFENSE SPECIFICATIONS

MIL-PRF-24623 - Splice, Fiber Optic Cable, General Specification for (Metric).

MIL-PRF-24792 - Adhesive, Epoxy, Two Part, Fiber Optics.

MIL-PRF-24793 - Adhesive, UV Curable, One Part, Fiber Optics.

MIL-PRF-24794 - Material, Index Matching, Fiber Optics.

MIL-C-28876 - Connectors, Fiber Optic, Circular, Plug and Receptacle Style, Multiple Removable Termini, General Specification for.

MIL-T-29504 - Termini, Fiber Optic Connector, Removable, General Specification for.

MIL-C-83522 - Connectors, Fiber Optic, Single Terminus, General Specification for.

MIL-PRF-85045 - Cables, Fiber Optics, (Metric), General Specification for.

DEPARTMENT OF DEFENSE STANDARDS

MIL-STD-2042-1 - Fiber Optic Cable Topology Installation, Standard Methods for Naval Ships (Cables)(Part 1 of 7 Parts).

MIL-STD-2042-2 - Fiber Optic Cable Topology Installation, Standard Methods for Naval Ships (Equipment)(Part 2 of 7 Parts).

MIL-STD-2042-6 - Fiber Optic Topology Installation, Standard Methods for Naval Ships (Tests)(Part 6 of 7 Parts).

Source: https://assist.dla.mil -- Downloaded: 2016-12-10T08:03Z
Check the source to verify that this is the current version before use.

(Unless otherwise indicated, copies of the above specifications, standards, and handbooks are available from the Standardization Documents Order Desk, 700 Robbins Ave, Building 4D, Philadelphia, PA, 19111-5094.)

2.2.2 Other Government documents. The following other Government documents form a part of this document to the extent specified herein. Unless otherwise specified, the issues are those cited in the solicitation.

DEPARTMENT OF DEFENSE DRAWINGS

NAVSEA Drawing - 6872811 Tool Kit, ST Connector (MIL-C-83522), Fiber Optic, Navy Shipboard.

- 6872812 Tool Kit, Splice (MIL-S-24623), Fiber Optic, Navy Shipboard.

- 6872813 Tool Kit, HD Connector (MIL-C-28876), Fiber Optic, Navy Shipboard.

- 7085185 Tool Kit, Fiber Optic, Navy Submarine

(Copies of documents should be obtained from the contracting activity or as directed by the contracting officer.)

2.3 Non-Government publications. The following documents form a part of this document to the extent specified herein. Unless otherwise specified, the issues of the documents which are DOD adopted are those listed in the issue of the DODISS cited in the solicitation. Unless otherwise specified, the issues of documents not listed in the DODISS are the issues of the documents cited in the solicitation (see 6.2).

AMERICAN NATIONAL STANDARDS INSTITUTE (ANSI)

ANSI Z136.2 - Safe Use of Optical Fiber Communication Systems Utilizing Laser Diode and LED Sources

(Application for copies should be addressed to the American National Standards Institute, 1430 Broadway, New York, NY 10018-3308.)

ELECTRONICS INDUSTRY ASSOCIATION/TELECOMMUNICATIONS INDUSTRY ASSOCIATION

EIA/TIA-440 - Fiber Optic Terminology.

(Application for copies should be addressed to Global Engineering Documents, 1990 M Street NW, Suite 400, Washington, DC 20036.)

2.4 Order of precedence. In the event of a conflict between the text of this document and the references cited herein, the text of this document takes precedence. Nothing in this document, however, supersedes applicable laws and regulations unless a specific exemption has been obtained.

Source: https://assist.dla.mil -- Downloaded: 2016-12-10T08:03Z
Check the source to verify that this is the current version before use.

3. DEFINITIONS

3.1 General fiber optics terms. Definitions for general fiber optics terms used in this standard practice are in accordance with EIA/TIA-440. Definitions for other terms as they are used in this standard practice are given in the following paragraphs.

3.2 Acronyms. The following acronyms are used in this standard practice:

BOF	Blown optical fiber
FOCP	Fiber optic cable plant
FOCT	Fiber optic cable topology
FOICB	Fiber optic interconnection box
TRB	Tube routing box

3.3 Authorized approval. Authorized approval is written approval from the cognizant Government activity.

3.4 BOF fiber. An optical fiber with a special coating that allows the fiber to be blown into a BOF tube.

3.5 BOF bundle. A group of optical fibers within a special jacket that allows the entire bundle to be blown into a BOF tube.

3.6 BOF tube. A tube within a BOF tube cable through which optical fibers or optical fiber bundles are blown.

3.7 End user equipment. End user equipment refers to any cabinet, case, panel, or device that contains components that are either the origin or destination of an optical signal.

3.8 Fiber optic cable plant (FOCP). A subset of the FOCT that excludes local cables and their associated components. A conventional FOCP includes FOICBs, trunk cables and their associated connectors and splices. A BOF FOCP consists of FOICBs, TRBs, tube couplers, BOF trunk cables, blown optical fibers, BOF bundles, tube furcation units and associated connectors and splices.

3.9 Fiber optic cable topology. An integrated optical fiber distribution system that provides the optical interconnection between end user equipments. A conventional FOCT includes the conventional FOCP components and outlet boxes, local cables and their associated connectors and splices. A BOF FOCT includes the BOF FOCP components, BOF cable furcations, local conventional cables, local tube cables, and associated connectors and splices.

3.10 Fiber optic interconnection box (FOICB). An enclosure for holding optical fiber cable (BOF and conventional), BOF tubes, tube furcation units, and optical fiber splices, connectors and adapters.

3.11 Installing activity. An installing activity is any military, commercial, or industrial organization involved with the installation of fiber optic cable topologies aboard Naval ships.

3.12 Local cable.

3.12.1 Local conventional cable. A conventional optical fiber cable that runs between an end user equipment and an FOICB (or outlet box), or between an FOICB and an outlet box.

3.12.2 Local tube cable. A BOF cable that runs between end user equipment and a TRB, or between a TRB and an outlet box.

Source: https://assist.dla.mil -- Downloaded: 2016-12-10T08:03Z
Check the source to verify that this is the current version before use.

3.13 Minimum bend diameter. The diameter at which a conventional optical fiber cable, OFCC (see 3.15), loose tube furcation cable, or BOF bundle (see 3.5) can be bent without degrading optical performance, or the diameter at which a BOF tube cable or BOF tube (see 3.6) can be bent without kinking a BOF tube. The short-term bend diameter applies during handling and installing; the long-term bend diameter applies to the completed installation.

3.14 Optical fiber cable. A cable that contains optical fibers.

3.14.1 BOF cable. A cable that contains one or more BOF tubes through which optical fibers or optical fiber bundles are blown.

3.14.2 Conventional optical fiber cable. An optical fiber cable in which the optical fiber is an integral part of the cable and is installed during the cable manufacturing process.

3.15 Optical fiber cable component (OFCC). An OFCC is a buffered fiber augmented with a concentric layer of strength members and an overall jacket.

3.16 Outlet box. A small termination box used to break out a local cable from an FOICB or TRB to one or more end user equipments in a compartment or area.

3.17 Trunk. A set of trunk cables that run along the same cableways between two FOCP boxes (TRBs, FOICBs).

3.18 Trunk cable. An optical fiber cable that runs between two FOICBs. Typically, trunk cables are run in the main cableways and have higher fiber counts per cable than local cables.

3.18.1 Conventional trunk cable. A conventional optical fiber cable that runs between two FOICBs.

3.18.2 BOF trunk cable. A single BOF cable connected between two FOCP TRBs or between a FOCP TRB and a FOCP FOICB. A BOF trunk cable contains multiple BOF trunk tubes.

3.19 Tube furcation unit. An assembly attached to the end of a BOF tube in a BOF cable used to separate the fibers and provide a cable structure to facilitate the termination of the optical fibers from that BOF tube.

Source: https://assist.dla.mil -- Downloaded: 2016-12-10T08:03Z
Check the source to verify that this is the current version before use.

4. GENERAL REQUIREMENTS

4.1 Optical fiber cable interconnection. Optical fiber cable interconnection within the fiber optic cable topology (see 3.9) shall be made by fiber optic connectors. Fiber optic splices shall only be used in specific systems previously designed utilizing MIL-PRF-24623/4 splices.

4.1.1 Interconnection component selection. The interconnection component shall be that referenced in ship specifications and drawings. In those instances where the installing activity (see 3.11) is responsible for determining the correct components, they shall be selected in accordance with 4.2 and 4.3. Termination of the various categories of fibers shall be in accordance with Part 1 of this standard practice.

4.2 Fiber connectors. Fiber optic connectors shall be as follows:

a. Single terminus (light duty) connectors in accordance with MIL-C-83522/16 shall be used to interconnect two optical fiber cable components (OFCCs) inside an interconnection box or equipment.

b. Single terminus (light duty) connectors in accordance with MIL-C-83522/16 shall be used to interconnect OFCCs and loose tube furcation cables inside an interconnection box or equipment.

c. Multiple terminus (heavy-duty) connectors in accordance with MIL-C-28876 shall be used for end user equipment (see 3.7) hookup. Plug connectors with inserts configured for pin termini shall be used on shipboard cabling. Receptacle connectors with inserts configured for socket termini shall be used on equipment. Plug connectors shall have backshells with integral strain relief. Receptacle connectors should be configured without backshells. Receptacle connectors should be configured with insert retention nuts or light duty strain relief.

d. Light duty Commercial Off-the-Shelf (COTS) connectors may be used to connect to COTS equipment interfaces. COTS connectors shall be as approved by the Naval Surface Warfare Center (see 1.1.1).

e. The use of optical fiber connectors other than those specified above shall be approved by the Naval Surface Warfare Center (see 1.1.1).

4.2.1 Installation. Connectors shall be installed on cables in accordance with the methods herein and as follows:

a. The hookup configuration of a heavy-duty connector (pin destinations) shall be in accordance with the approved drawings.

b. Where a heavy-duty connector is installed on the end of a cable, the optical fibers shall be connected to pin termini in a plug style connector. Every terminus position shall have either an optical or dummy terminus in accordance with MIL-T-29504/3 or /14.

c. Only receptacle style heavy-duty connectors shall be used on equipment. Only socket type termini or dummy termini in accordance with MIL-T-29504/15 or MIL-T-29504/3 shall be used in receptacle style heavy-duty connectors.

d. COTS light duty connectors and other connectors approved by the Naval Surface Warfare Center shall be installed using the methods herein as a guide.

Source: https://assist.dla.mil -- Downloaded: 2016-12-10T08:03Z
Check the source to verify that this is the current version before use.

4.3 Fiber optic splices. Fiber optic splices shall be in accordance with MIL-PRF-24623/4. The method described herein applies to the mechanical splice used as a normal interconnection between cables.

4.3.1 Installation. Fiber optic splice ferrules shall be installed on buffered fibers in accordance with the methods herein and as follows:

a. The splice ferrules shall be mated, aligned and installed in the splice tray in accordance with the methods in Part 2 of this standard practice.

b. Splices shall be located only inside equipment as identified in the approved drawings.

4.4 Tests. Following installation, testing of all components of the fiber optic cable topology shall be in accordance with Part 6 of this standard practice.

4.5 Safety precautions. The following safety precautions apply:

a. Observe all written safety precautions given in the methods of this standard practice.

b. Observe all warning signs on equipment and materials.

c. The classification of a laser is based on the ability of the optical beam to cause damage to the eye. Under normal operating conditions, an optical fiber communication system (OFCS) is inherently an eye safe system; but, when an optical fiber connection is broken and optical viewing instruments are used, it is possible that hazardous energy can enter the eye. For this reason four service group hazard classes have been devised to indicate the degree of hazard and required hazard control measures. Refer to ANSI Z136.2 for a full technical definition. The following laser safety precautions shall apply:

(1) Ensure personnel are familiar with the laser degree of hazard and the required control measures.

(2) Light generated by light emitting diodes (LED's) and laser diodes may not be visible but may still be hazardous to the unprotected eye. Never stare into the end of an optical fiber connected to an LED or laser diode and do not stare into broken, severed or disconnected optical cables.

(3) Do not view the primary beam or a specular reflection from an OFCS with an optical microscope, eye loupe or other viewing instrument. The instrument may create a hazard due to its light gathering capability.

d. Safety glasses shall be worn when handling bare fibers. Always handle cable carefully to avoid personal injury. The ends of optical fibers may be extremely sharp and can lacerate or penetrate the skin or cause permanent eye damage if touched to the eye. If the fiber penetrates the skin, it most likely will break off, in which case the extraction of the fiber should be performed by trained medical personnel to prevent further complications.

f. Wash hands after handling bare fibers or performing fiber terminations.

Source: https://assist.dla.mil -- Downloaded: 2016-12-10T08:03Z
Check the source to verify that this is the current version before use.

g. Never look into the end of a BOF tube. Always wear approved safety glasses when handling BOF tubes that may be connected to a pressure source.

h. Ultraviolet (UV) safety glasses shall be worn when using the UV curing lamp.

i. Do not eat or drink in the vicinity of bare optical fibers. Ingested optical fibers may cause serious internal damage.

Source: https://assist.dla.mil -- Downloaded: 2016-12-10T08:03Z
Check the source to verify that this is the current version before use.

5. DETAILED REQUIREMENTS

5.1 Heavy-duty connector installation. Installation of the MIL-C-28876 heavy-duty connector on optical fiber cable shall be in accordance with Method 5A1. There are four basic connector rear end configurations; with removable backshell, with integral backshell, with insert retention nut, and with light duty strain relief (for internal to equipments).

5.1.1 Heavy-duty connectors with removable backshells. Connectors with removable backshells are described with the basic Military Part Numbers M28876/1, M28876/6, and M28876/11. These connectors do not contain an integral backshell with strain relief and must be assembled to a backshell during installation onto optical fiber cable. Backshells with strain relief for use with these connectors are described with the basic Military Part Numbers M28876/27, M28876/28, and M28876/29. Method 5A1-1 shall be used to install the connector and the backshell on the cable for these connectors.

5.1.2 Heavy-duty connectors with integral backshells. Connectors with integral backshells are described with the basic Military Part Numbers M28876/2, M28876/3, M28876/4, M28876/5, M28876/7, M28876/8, M28876/9, M28876/12, M28876/13, and M28876/14. These connectors contain an integral backshell with strain relief. In some cases, these backshells are removable. Method 5A1-2 shall be used to install the connector on the cable for these connectors.

5.1.3 Heavy-duty connectors with insert retention nuts. Connectors with insert retention nuts are also described with the basic Military Part Numbers M28876/1 and M28876/11. These connectors do not contain an integral backshell with strain relief and are not required to be assembled to a backshell during installation. These connectors are for use in situations where strain relief is not required (for example, the equipment side of an equipment fiber optic interface.) Method 5A1-3 shall be used to install the connector within the equipment for these connectors.

5.1.4 Heavy-duty connectors with light duty strain relief. Connectors with light duty strain relief are described with the basic Military Part Numbers M28876/1 and M28876/11. These connectors contain a light duty backshell with strain relief. These connectors are for use in situations where limited strain relief is required (for example, the equipment side of an equipment fiber optic interface.) Method 5A1-4 shall be used to install the connector within the equipment for these connectors.

5.2 Light duty connector installation. Light duty connectors in accordance with MIL-C-83522/16 shall be installed on fibers in accordance with Method 5B1.

5.3 Mechanical (rotary) splice installation. Mechanical (rotary) splice ferrules shall be installed on fibers in accordance with Method 5C1. Assembly of the splice shall be in accordance with Method 2D1 in Part 2 of this standard practice.

5.4 COTS light duty connector installation. COTS light duty connectors shall be installed using Method 5B1 as a guide. COTS light duty connectors shall be polished and inspected using the processes identified in Method 5B1.

Source: https://assist.dla.mil -- Downloaded: 2016-12-10T08:03Z
Check the source to verify that this is the current version before use.

6. NOTES

(This section contains information of a general or explanatory nature that may be helpful, but is not mandatory.)

6.1 Intended use. The methods for installation of connectors and interconnections depicted in this standard practice are intended primarily for new construction; however, they are applicable for conversion or alteration of existing ships.

6.2 Issue of DODISS. When this standard practice is used in acquisition, the applicable issue of DODISS must be cited in the solicitation (see 2.2.1).

6.3 Standard method designation. To simplify the usage of this standard practice, an alphanumeric designation system was developed to identify and locate a given method. The methods were grouped together by function as follows:

Group	A:	Multiple terminus connector installation
	B:	Single terminus connector installation
	C:	Mechanical splice ferrule installation

Then the designation system was completed as follows:

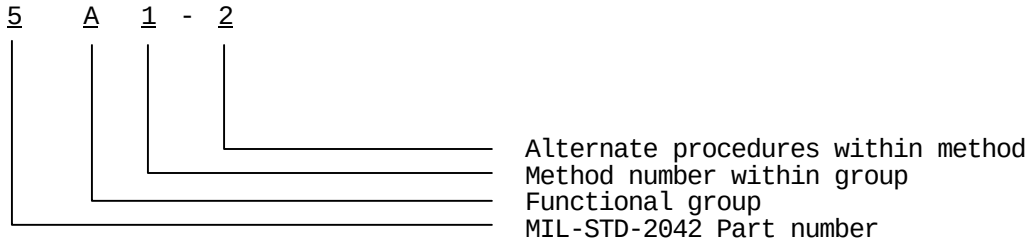

Thus, method 5A1-2 identifies the second alternate procedure within method 1 of group A in Part 5 (MIL-STD-2042-5) of MIL-STD-2042.

6.4 Subject term (key word) listing.

Optical fiber cable interconnection
Fiber optic connectors
Fiber optic splices
Safety

6.5 Changes from previous issue. Marginal notations are not used in this revision to identify changes with respect to the previous issue, due to the extent of the changes.

Preparing activity:
NAVY - SH

(Project SESS-0009)

Source: https://assist.dla.mil -- Downloaded: 2016-12-10T08:03Z
Check the source to verify that this is the current version before use.

METHOD 5A1

MULTIPLE TERMINUS CONNECTOR INSTALLATION

1. SCOPE.

1.1 Scope. This method describes a procedure for installing MIL-C-28876 multiple terminus (heavy-duty) connectors on optical fiber cable. Method 5A1-1 covers connectors with removable backshells, method 5A1-2 covers connectors with integral backshells, method 5A1-3 covers connectors with insert retention nuts, and method 5A1-4 covers connectors with light duty strain relief. (See paragraph 5.1 of this standard practice for more detail.)

2. REQUIRED EQUIPMENT AND MATERIALS.

2.1 The equipment and materials in the tables located in the applicable sections of this method shall be used to perform these procedures.

3. PROCEDURES.

3.1 Safety summary. The following safety precautions shall be observed:

a. Safety glasses shall be worn at all times when handling bare fibers or dispensing epoxy.

b. Do not touch the ends of the fiber as they may be razor sharp. Wash your hands after handling bare fiber.

c. Avoid skin contact with epoxies.

d. When visually inspecting an optical fiber, never stare into the end of a fiber connected to a laser source or LED.

e. Never look into the end of a BOF tube. Always wear approved safety glasses when handling BOF tubes that may be connected to a pressure source.

3.2 Procedure I. Method 5A1-1 Installation of connectors with removable backshells. This method shall be used to install connectors with part numbers M28876/1, M28876/6 and M28876/11 (configured without insert retention nuts) and backshells with part numbers M28876/27, M28876/28 and M28876/29 onto optical fiber cables.

3.2.1 Equipment and materials. The equipment and materials in table 5A1-I shall be used to perform this procedure:

TABLE 5A1-I. Equipment and materials.

Description	Quantity
Wipes (NAVSEA DWG 6872813-22 or equal)	As required
Ruler	1
Alcohol bottle with alcohol/2-propanol or equal (sealable type)	1

Source: https://assist.dla.mil -- Downloaded: 2016-12-10T08:03Z
Check the source to verify that this is the current version before use.

TABLE 5A1-I. Equipment and materials - continued.

Description	Quantity
Canned air or compressed air	As required
Cable jacket stripping tool (NAVSEA DWG 6872813-8 or equal)	1
Masking tape	As required
Kevlar shears (NAVSEA DWG 6872813-16 or equal)	1
OFCC strip tool (NAVSEA DWG 6872813-10 or equal)	1
Safety glasses	1
Buffer strip tool (NAVSEA DWG 6872813-9 or equal)	1
Cleaning wire (NAVSEA DWG 6872813-32 or equal)	As required
Epoxy (MIL-PRF-24792)	As required
Syringe with dispensing needles (NAVSEA DWG 6872813-27 or equal)	As required
Crimp tool (NAVSEA DWG 6872813-17 or equal)	1
Razor blade	1
Cure adapters (NAVSEA DWG 6872813-19 or equal)	As required
Curing oven (NAVSEA DWG 6872813-19 or equal)	1
Cable stand (NAVSEA DWG 6872813-19 or equal)	1
Cable stand ring (NAVSEA DWG 6872813-19 or equal)	1
Cable clip (NAVSEA DWG 6872813-19 or equal)	1
Cleaver (NAVSEA DWG 6872813-7 or equal)	1
Polishing paper (5 •m aluminum oxide, foam backed) (NAVSEA DWG 6872813-24 or equal)	As required
Polishing tool ceramic termini (NAVSEA DWG 6872813-18 or equal)	1
Terminus insertion tool (NAVSEA DWG 6872813-2 or equal)	1
Terminus insertion tool 90 degree (NAVSEA DWG 6872813-15 or equal)	1
Glass polishing plate (NAVSEA DWG 6872813-3 or equal)	1
7X eye loupe	1

Source: https://assist.dla.mil -- Downloaded: 2016-12-10T08:03Z
Check the source to verify that this is the current version before use.

TABLE 5A1-I. Equipment and materials - continued.

Description	Quantity
Polishing paper (1 um aluminum oxide, mylar backed) (NAVSEA DWG 6872813-23 or equal)	As required
Water bottle (sealable type)	1
Terminus removal tool (NAVSEA DWG 6872813-6 or equal)	1
Optical microscope 400X (NAVSEA DWG 6872813-28 or equal)	1
Alignment sleeve insertion and removal tool (ceramic termini)(NAVSEA DWG 6872813-4 or equal)	1
Loctite or equal	As required
"O"-ring lubricant (Bray Cote 609 or equal)	As required
Adjustable wrench	1
Backshell grip	1
Protective caps (plastic)	As required
Polishing paper (0.1 um diamond, mylar backed) (NAVSEA DWG 6872813-41 or equal)	As required
Resilient pad (70 to 90 durometer)(NAVSEA DWG 6872813-42 or equal)	1
Polishing paper (ultrafine, mylar backed) (JDS Optics HF5D or equal)	As required

CAUTION: Throughout the termination process, cleanliness is critical to obtaining a high optical quality connector. Make sure that your hands and the work area are as clean as possible to minimize the ingress of dirt into the connector parts.

NOTE: Verify that the epoxy shelf life has not expired. Do not use epoxy with an expiration date that has passed. Epoxy shelf life can be extended if the epoxy is refrigerated. Contact the epoxy vendor or the Naval Surface Warfare Center (see 1.1.1) for additional information.

3.2.2 Cable and fiber preparation.

3.2.2.1 Cable and fiber preparation for Veam backshells. This section is applicable only for removable backshells manufactured by Veam, Inc.

Step 1 - Ensure the cable is the correct type as specified on the applicable cable diagram.

Source: https://assist.dla.mil -- Downloaded: 2016-12-10T08:03Z
Check the source to verify that this is the current version before use.

Step 2 - Measure the cable to the required length. Then add sufficient slack to allow for at least two reterminations [190 mm (7.5 in) of slack should be sufficient for one retermination].

Step 3 - Clean the outer cable jacket that will be in contact with the connector and backshell with a wipe dampened with alcohol and blow it dry with air.

NOTE: Keep the cable and connector parts free from oil, dirt and grease throughout the installation procedure. If cleaning is necessary, use a wipe dampened with alcohol and blow the part dry with air.

Step 4 - Slide the backshell parts onto the cable in the order indicated below (see figure 5A1-1).

a. Backnut

b. "O"-ring

c. Spacer

d. Ferrule (kevlar grip)

e. Sheath (ensure "O"-rings are in place)

f. Backshell body

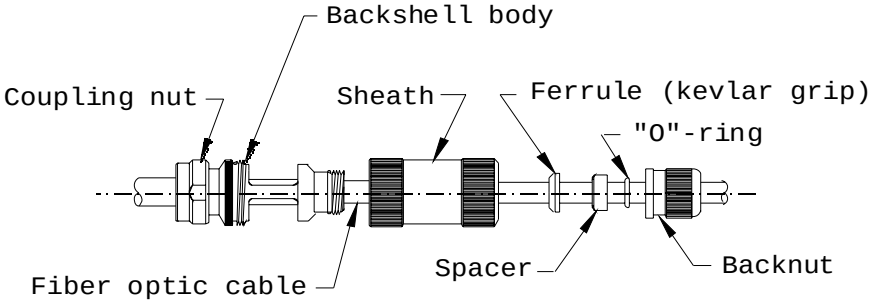

FIGURE 5A1-1. Backshell parts on the cable (straight backshell).

Step 5 - Mark the cable jacket approximately 190 mm (7.5 in) from the end and strip back the outer cable jacket to the mark using the cable stripper. Fold back the kevlar strength members and temporarily tape them to the cable outer jacket.

NOTE: The cable core should not be bent beyond the minimum bend diameter when removing the cable jacket. If the cable core is bent beyond the minimum bend diameter during cable jacket removal, optical fiber damage may occur.

CAUTION: Do not cut or nick OFCC jackets.

Cut off the exposed central member and any fillers using the kevlar shears.

Step 6 - Remove any water blocking material, clean the OFCCs using a wipe dampened with alcohol and blow them dry with air.

Source: https://assist.dla.mil -- Downloaded: 2016-12-10T08:03Z
Check the source to verify that this is the current version before use.

Step 7 - Trim the OFCCs to the length (A + B + C) shown in table 5A1-II using the kevlar shears (see figure 5A1-2).

TABLE 5A1-II. Cable stripping dimensions.

Connector shell size	Backshell configuration	Dimensions mm (in)					
		Long Backshell			Short Backshell		
		A	B	C	A	B	C
13	Straight	105 (4.13)	10 (0.39)	22 (0.87)	88 (3.46)	10 (0.39)	22 (0.87)
	45°	120 (4.72)	10 (0.39)	22 (0.87)	100 (3.94)	10 (0.39)	22 (0.87)
	90°	120 (4.72)	10 (0.39)	22 (0.87)	100 (3.94)	10 (0.39)	22 (0.87)
15	Straight	130 (5.12)	10 (0.39)	22 (0.87)	105 (4.13)	10 (0.39)	22 (0.87)
	45°	126 (4.96)	10 (0.39)	22 (0.87)	101 (3.98)	10 (0.39)	22 (0.87)
	90°	126 (4.96)	10 (0.39)	22 (0.87)	101 (3.98)	10 (0.39)	22 (0.87)

NOTE: The tolerance on dimensions A and B is +/- 1 mm (+/- 0.04 in).

NOTE: Shorter values for dimension C may be used.

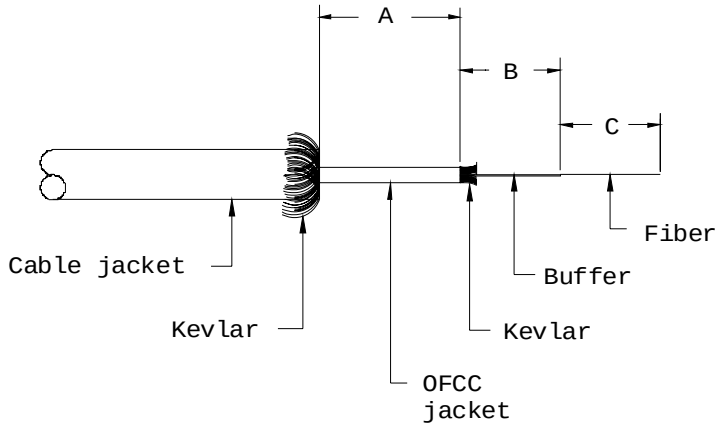

FIGURE 5A1-2. Cable stripping dimensions.

Source: https://assist.dla.mil -- Downloaded: 2016-12-10T08:03Z
Check the source to verify that this is the current version before use.

NOTE: The definition of dimensions A and B has been changed from the definition used in MIL-STD-2042A.

Step 8 - Feed each OFCC into a crimp sleeve and slide the sleeve back from the end of the OFCC. (NOTE: Only use crimp sleeves intended for termini. Do not use crimp sleeves intended for other types of connectors. The standard crimp sleeve for the terminus may be oriented in either direction.)

Step 9 - Remove the OFCC jackets back to the dimensions (B + C) shown in table 5A1-II using the OFCC stripper and trim the OFCC kevlar using the kevlar shears so that approximately 3 mm (0.12 in) extends past the OFCC jacket (see figure 5A1-2).

NOTE: The optimum way to remove the OFCC jackets is to ring cut the jacket with the OFCC stripper and pull the jacket off by hand. Pushing off the OFCC jacket with a tightly held OFCC stripper can lead to fiber breakage.

Step 10 - WARNING: Wear safety glasses when removing the fiber buffer and coating to avoid possible eye injury.

Remove the fiber buffers and coatings back to the dimension (C) shown in table 5A1-II using the buffer stripper (see figure 5A1-2). Remove the buffer and coating in small sections (approximately 6 mm (0.25 in) at a time.) (NOTE: Normally, the buffer and coating are tightly adhered to one another and come off of the fiber at the same time.)

Step 11 - CAUTION: The uncoated fiber is in its most vulnerable state. Take extreme care not to damage the fiber. Breakage of any one fiber from this point until the connector is completely assembled will require repetition of this and the following steps in order to maintain approximately equal length of all the fibers in the cable.

Remove any residual coating material from the bare fibers with a wipe dampened with alcohol. Wipe only once from the end of the buffer towards the end of the fiber. (NOTE: Do not repeatedly wipe the bare fiber, as this will weaken the fiber.)

3.2.2.2 Cable and fiber preparation for Fiber Systems International backshells. This section is applicable only for removable backshells manufactured by Fiber Systems International, Inc.

(This section is intentionally left blank until Fiber Systems International products complete qualification testing.)

3.2.3 Installation of the termini onto the fibers.

NOTE: This procedure describes the process for installing ceramic termini onto either multimode or single-mode fibers. The termini use epoxy to secure the fiber and a crimp sleeve to capture the kevlar strength members of the OFCCs.

Step 1 - Turn on the curing oven so that it attains the proper temperature before the termini are placed within it (approximately 20 minutes).

Source: https://assist.dla.mil -- Downloaded: 2016-12-10T08:03Z
Check the source to verify that this is the current version before use.

Step 2 - Inspect the terminus and verify that the ferrule hole is free and clean of dirt. This can be accomplished by holding the front of the terminus up to a light and verifying that the light is visible from the rear of the terminus. If light cannot be seen through the terminus, push clean music wire through the terminus hole to clear it. Then blow dry air through the hole to remove any debris.

Step 3 - Remove the divider from a 2-part epoxy package and mix the two parts together until the epoxy is a smooth uniform color (see figure 5A1-3). The epoxy can be mixed by either repeatedly rolling or gently sliding the divider over the package.

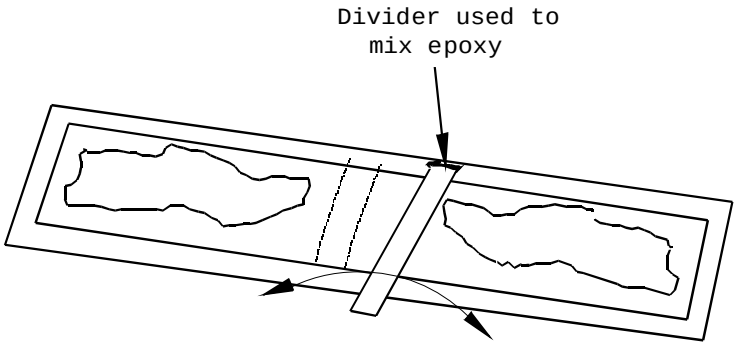

FIGURE 5A1-3. Mixing the epoxy.

NOTE: Alternatively, the epoxy may be mixed by massaging the epoxy package by hand.

CAUTION: Do not introduce large air bubbles into the epoxy during the mixing process. Large air bubbles in the epoxy can lead to connector failure during temperature extremes.

Step 4 - Install the syringe tip on the syringe, remove the plunger, and squeeze the epoxy into the syringe. Replace the plunger.

Step 5 - WARNING: Wear safety glasses while dispensing the epoxy to avoid possible eye injury.

Remove air pockets in the syringe by holding the tip of the syringe upward and dispensing epoxy onto a wipe until it runs free and clear.

Step 6 - Slide the terminus, rear first, onto the syringe tip (see figure 5A1-4). Keeping the syringe vertical, depress the plunger and slowly inject epoxy into the terminus until it escapes out of the ferrule, forming a very small bead. (NOTE: Do not overfill. Be extremely careful not to get epoxy on the pin spring or other terminus moving parts.)

Source: https://assist.dla.mil -- Downloaded: 2016-12-10T08:03Z
Check the source to verify that this is the current version before use.

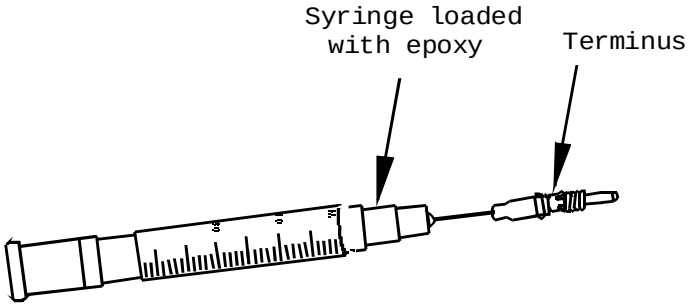

FIGURE 5A1-4. Injecting epoxy into the terminus.

Step 7 - Withdraw the syringe from the terminus. Maintain some pressure on the plunger as the syringe is withdrawn so that the terminus is completely filled with epoxy. Using a wipe dampened with alcohol, wipe away any epoxy on the outer diameter of ferrule without disturbing the epoxy bead.

NOTE: Alternatively, the terminus may be completely filled by maintaining a light pressure on the syringe plunger and allowing the epoxy to push the terminus off of the syringe tip.

NOTE: At this point, the terminus may be inserted into the cure adapter. Refer to Step 13 for insertion of the terminus into the cure adapter.

Step 8 - Feather the kevlar evenly around the fiber and insert the fiber into the rear of the terminus (see figure 5A1-5). Gently work the fiber through the terminus until the buffer seats against the rear of the ferrule. (The terminus should be rotated around the fiber as the fiber is inserted.) The OFCC jacket should come up to the rear of the terminus and the kevlar should surround the rear of the terminus. Do not allow kevlar to enter the rear of the terminus. Once inserted, do not allow the fiber to slip back.

Source: https://assist.dla.mil -- Downloaded: 2016-12-10T08:03Z
Check the source to verify that this is the current version before use.

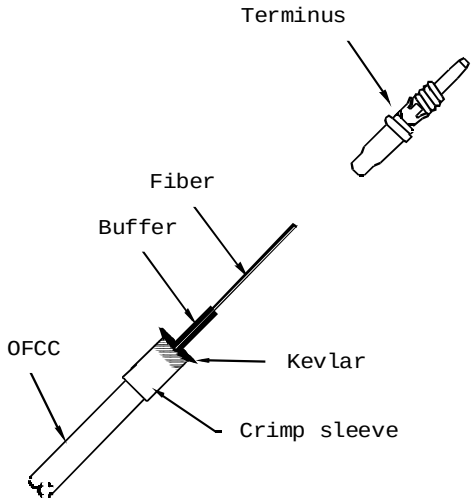

FIGURE 5A1-5. Inserting the fiber into the terminus.

Step 9 - Slide the crimp sleeve over the kevlar and crimp it to the rear of the terminus using the crimp tool. (NOTE: A small amount of epoxy may be added on the kevlar near the rear of the terminus before the crimp sleeve is installed. However, no epoxy should be visible once the crimp sleeve is installed.)

NOTE: If small wings are visible on the sides of the crimp sleeve after crimping, rotate the terminus 60° in the crimp tool and crimp the terminus a second time.

Step 10 - Verify that the kevlar does not protrude excessively from under the crimp sleeve. Excessive kevlar protrusion will cause the terminus to not seat properly in the finished connector. If excessive kevlar protrudes from under the crimp sleeve, trim it back using a razor blade.

Step 11 - Verify that there is a small amount of epoxy around the fiber where it protrudes from the ferrule. If it is found that there is no small bead of epoxy on the terminus tip, carefully add a small amount of epoxy around the fiber. (NOTE: There should only be a small amount of epoxy around the fiber to support it later during the polishing process. If too much epoxy is around the fiber during the curing process, it may cause the fiber to crack.)

NOTE: If the terminus was inserted into the cure adapter in Step 7, then Steps 11, 12 and 13 may be omitted.

Step 12 - Using a wipe dampened with alcohol, carefully wipe away any excess epoxy on the fiber that is more than 2 mm (0.1 in) from the ferrule tip surface.

Step 13 - Insert the terminus into the cure adapter until it snaps into place (see figure 5A1-6).

Source: https://assist.dla.mil -- Downloaded: 2016-12-10T08:03Z
Check the source to verify that this is the current version before use.

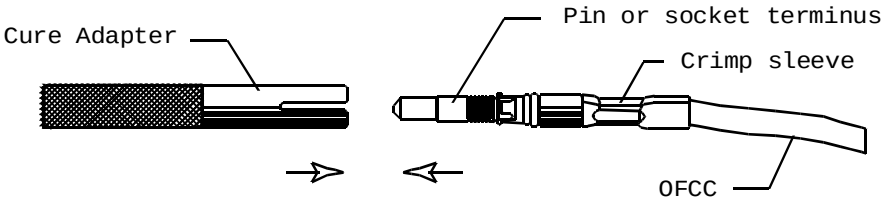

FIGURE 5A1-6. Inserting a terminus into a cure adapter.

Step 14 -Repeat steps 2 through 13 for each fiber to be terminated.

Step 15 -Place the cure adapters in the curing oven, and position the cable vertically over the oven using the cable stand, cable stand ring and cable clip (see figure 5A1-7). Cure the epoxy for a minimum of 10 minutes (maximum of 30 minutes) at 120°C (248°F). (NOTE: When the cable is positioned above the terminus, make sure that no bends are placed in the OFCCs. Each OFCC should enter the terminus parallel to the terminus.)

NOTE: Alternate cure schedules may be used with approval of the Naval Surface Warfare Center (see 1.1.1).

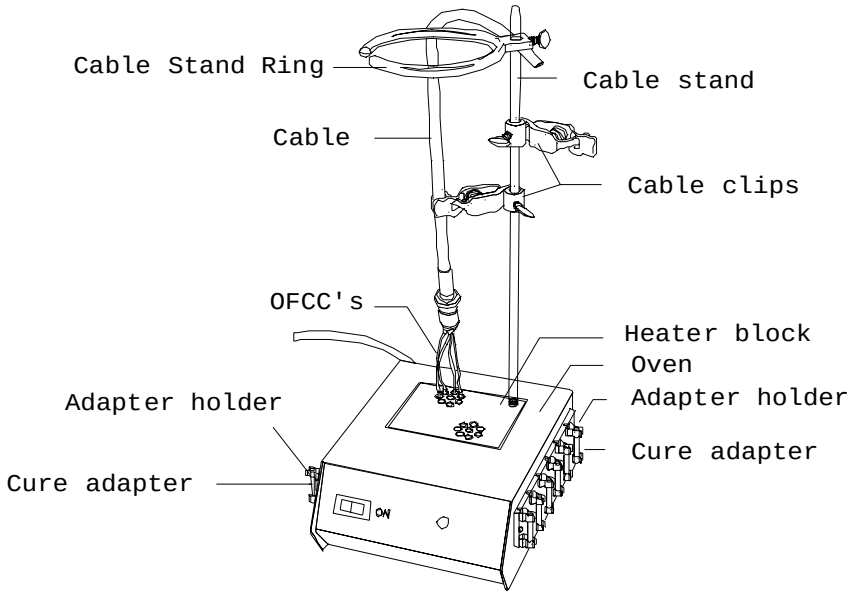

FIGURE 5A1-7. Termini in the curing oven.

Step 16 -Turn the curing oven off and remove the cure adapters and termini from the curing oven. Allow the cure adapters and termini to cool for approximately 4 minutes.

3.2.4 Polishing the fiber ends.

3.2.4.1 Flat end polish. This procedure will produce a terminus with a flat end polish. This procedure is applicable only for multimode applications.

Source: https://assist.dla.mil -- Downloaded: 2016-12-10T08:03Z
Check the source to verify that this is the current version before use.

Procedures for hand polishing are contained herein. Machine polishing may be used as an alternate method, provided the following requirements are satisfied:

a. The manufacturer's instructions will be rigidly adhered to, except that the polishing papers or disks shall be 5 um aluminum oxide foam backed, 1 um aluminum oxide mylar backed, and 0.1 um diamond mylar backed as used in hand polishing. (NOTE: Alternate polishing materials may be used if authorized approval is obtained and the polishing machine includes the appropriate stops to prevent changes to the ferrule length.)

b. The machine polished terminus shall undergo the same quality check used for the manually polished terminus as described herein.

NOTE: The procedures contained herein should produce an optical terminus with a physical contact (PC) polish.

Step 1 - WARNING: Wear safety glasses when scoring the fiber to avoid possible eye injury.

Remove the terminus from the cure adapter and score the fiber close to the terminus tip at the epoxy interface using one short light stroke with cleaving tool (see figure 5A1-8). (NOTE: Do not break the fibers with the cleaving tool.) Pull off each fiber with a gentle, straight pull. Deposit the waste fiber in a trash container.

NOTE: The termini not being polished should be left in the cure adapters during the polishing process to protect the fibers from breakage.

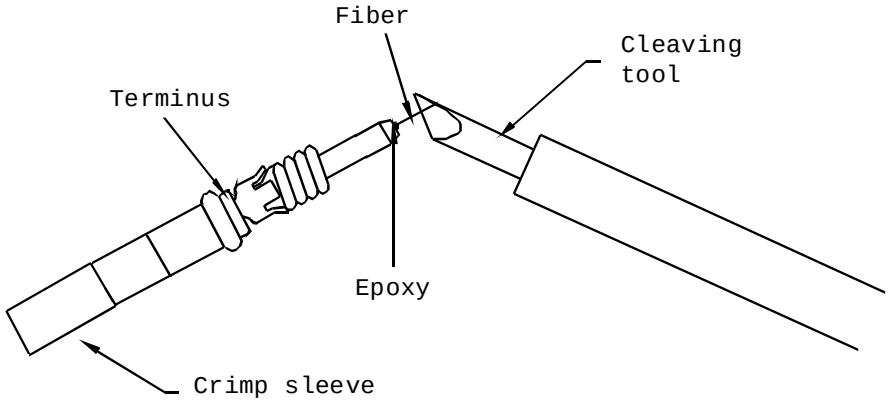

FIGURE 5A1-8. Scoring the fiber.

NOTE: Before inserting the terminus into the polishing tool, the terminus may be held vertically and the end of the fiber polished off by lightly running the 5 um polishing paper over the top of the terminus tip. (This is referred to as air polishing the terminus.)

Step 2 - Rotate the top half of the polishing tool 90° counterclockwise and separate the top from the base.

Step 3 - Place the end of the terminus insertion tool at the rear of the crimp sleeve with the OFCC laid in the tool channel (see figure 5A1-9).

Source: https://assist.dla.mil -- Downloaded: 2016-12-10T08:03Z
Check the source to verify that this is the current version before use.

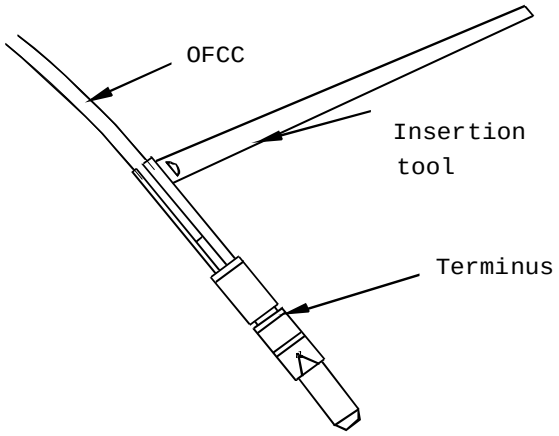

FIGURE 5A1-9. Placing the terminus in the insertion tool.

Step 4 - Insert the terminus into the center of the polishing tool top. Apply pressure with the insertion tool until the terminus snaps into place. Remove the tool by pulling straight back (see figure 5A1-10). (NOTE: Difficulty in inserting the terminus into the polishing tool may indicate epoxy on the outside of the terminus that must be removed before proceeding.)

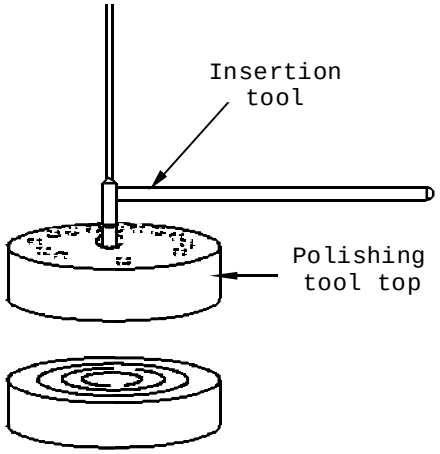

FIGURE 5A1-10. Inserting the terminus in the polishing tool.

Step 5 - Install the top half of the polishing tool on the bottom half and rotate it clockwise (90°) until it locks in place.

Step 6 - Clean the glass polishing plate, the backs of the polishing papers, and the surface of the polishing tool using a wipe dampened with alcohol. Blow all of the surfaces dry with air.

Step 7 - Place the 5 um polishing paper on the glass plate and start polishing the terminus with very light pressure (the weight of the tool) using a figure-8 motion. Do not overpolish the terminus. (NOTE: The first

Source: https://assist.dla.mil -- Downloaded: 2016-12-10T08:03Z
Check the source to verify that this is the current version before use.

polish is complete when all of the epoxy is almost gone from the tip of the terminus.) Since the polishing time varies with the amount of epoxy present on the tip of the terminus, inspect the terminus tip frequently. Whenever the polishing tool is lifted, remove the grit from the tool and the terminus with a wipe dampened with alcohol or with air. When polishing is complete, clean the terminus and the polishing tool using a wipe dampened with alcohol and blow them dry with air. Perform a rough inspection of the ferrule end using the eye loop.

Step 8 - Replace the 5 um paper with the 1 um paper. Polish the terminus with very light pressure using a figure-8 motion for approximately 10 to 20 complete motions.

NOTE: The 1 um polish is complete when all of the epoxy is gone from the tip of the terminus.

NOTE: The 1 um polish may also be performed using wet paper.

Step 9 - Replace the 1 um paper with the 0.1 um paper. Wet the paper and polish the terminus with very light pressure using a figure-8 motion for approximately 10 to 20 complete motions.

NOTE: The final polish may also be performed using dry paper.

Step 10 - Rotate the top of the polishing tool counterclockwise (90°) and separate the top from the base. Insert the terminus removal tool into the bottom of the terminus cavity of the polishing tool top and press on the hilt of the removal tool until the tool clicks into place (see figure 5A1-11). (NOTE: Make sure that the removal tool is clean before inserting the tool into the terminus cavity.) Depress the plunger and slide the terminus out of the polishing tool. Clean the terminus and the polishing tool with a wipe dampened with alcohol and blow them dry with air.

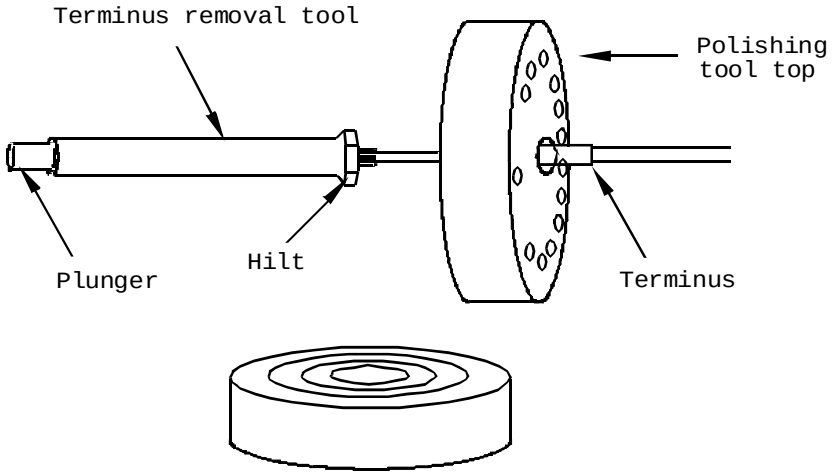

FIGURE 5A1-11. Removing the terminus from the polishing tool.

Step 11 - Repeat steps 1 through 10 for all of the termini.

Source: https://assist.dla.mil -- Downloaded: 2016-12-10T08:03Z
Check the source to verify that this is the current version before use.

3.2.4.2 Domed end polish.

3.2.4.2.1 Standard procedure. This procedure will produce a terminus with a domed end polish. This procedure is recommended for high quality multimode applications and single mode applications with a minimum return loss requirement of 30 db. Procedures for hand polishing are contained herein. Machine polishing may be used as an alternate method, provided the following requirements are satisfied:

a. The manufacturer's instructions will be rigidly adhered to, except that the polishing papers or disks shall be 5 um aluminum oxide foam backed, 1 um aluminum oxide mylar backed, and 0.1 um diamond mylar backed as used in hand polishing. (NOTE: Alternate polishing materials may be used if authorized approval is obtained and the polishing machine includes the appropriate stops to prevent changes to the ferrule length.)

b. The machine polished terminus shall undergo the same quality check used for the manually polished terminus as described herein.

NOTE: The procedures contained herein should produce an optical terminus with a physical contact (PC) polish.

Step 1 - WARNING: Wear safety glasses when scoring the fiber to avoid possible eye injury.

Remove the terminus from the cure adapter and score the fiber close to the terminus tip at the epoxy interface using one short light stroke with cleaving tool (see figure 5A1-12). (NOTE: Do not break the fibers with the cleaving tool.) Pull off each fiber with a gentle, straight pull. Deposit the waste fiber in a trash container.

NOTE: The termini not being polished should be left in the cure adapters during the polishing process to protect the fibers from breakage.

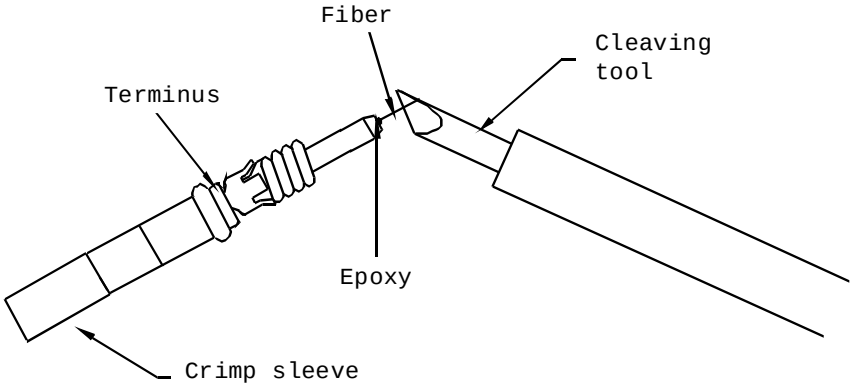

FIGURE 5A1-12. Scoring the fiber.

NOTE: Before inserting the terminus into the polishing tool, the terminus may be held vertically and the end of the fiber polished off by lightly running the 5 um polishing paper over the top of the terminus tip. (This is referred to as air polishing the terminus.)

Step 2 - Rotate the top half of the polishing tool 90° counterclockwise and separate the top from the base.

Source: https://assist.dla.mil -- Downloaded: 2016-12-10T08:03Z
Check the source to verify that this is the current version before use.

Step 3 - Place the end of the terminus insertion tool at the rear of the crimp sleeve with the OFCC laid in the tool channel (see figure 5A1-13).

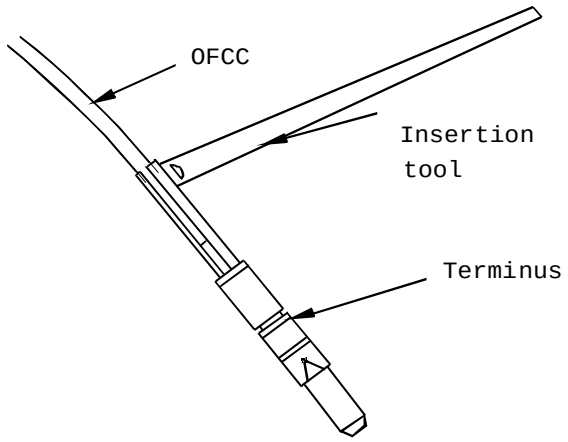

FIGURE 5A1-13. Placing the terminus in the insertion tool.

Step 4 - Insert the terminus into the center of the polishing tool top. Apply pressure with the insertion tool until the terminus snaps into place. Remove the tool by pulling straight back (see figure 5A1-14). (NOTE: Difficulty in inserting the terminus into the polishing tool may indicate epoxy on outside of the terminus that must be removed before proceeding.)

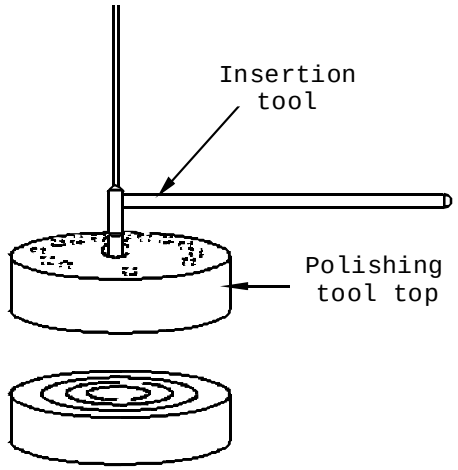

FIGURE 5A1-14. Inserting the terminus into the polishing tool.

Step 5 - Install the top half of the polishing tool on the bottom half and rotate it clockwise (90°) until it locks in place.

Step 6 - Clean the glass polishing plate, the resilient pad, the backs of the polishing papers, and the surface of the polishing tool using a wipe dampened with alcohol. Blow all of the surfaces dry with air.

Source: https://assist.dla.mil -- Downloaded: 2016-12-10T08:03Z
Check the source to verify that this is the current version before use.

Step 7 - Place the 5 um polishing paper on the glass plate and start polishing the terminus with very light pressure (the weight of the tool) using a figure-8 motion. Do not overpolish the terminus. (NOTE: The first polish is complete when all of the epoxy is almost gone from the tip of the terminus.) Since the polishing time varies with the amount of epoxy present on the tip of the terminus, inspect the terminus tip frequently. Whenever the polishing tool is lifted, remove the grit from the tool and the terminus with a wipe dampened with alcohol or with air. When polishing is complete, clean the terminus and the polishing tool using a wipe dampened with alcohol and blow them dry with air. Perform a rough inspection of the ferrule end using the eye loop.

Step 8 - Place the resilient pad on top of the glass plate. Place 1 um paper on the resilient pad. Wet the paper and polish the terminus with no pressure using a figure-8 motion for approximately 10 complete motions.

NOTE: The polish tool should hydroplane above the paper surface during this polish.

NOTE: The 1 um polish is complete when all of the epoxy is gone from the tip of the terminus.

NOTE: The 1 um polish may also be performed using dry paper.

Step 9 - Replace the 1 um paper with the 0.1 um paper. Wet the paper and polish the terminus with no pressure using a figure-8 motion for approximately 20 to 30 complete motions.

NOTE: The polish tool should hydroplane above the paper surface during this polish.

Step 10 - Rotate the top of the polishing tool counterclockwise (90°) and separate the top from the base. Insert the terminus removal tool into the bottom of the terminus cavity of the polishing tool top and press on the hilt of the removal tool until the tool clicks into place (see figure 5A1-15). (NOTE: Make sure that the removal tool is clean before inserting the tool into the terminus cavity.) Depress the plunger and slide the terminus out of the polishing tool. Clean the terminus and the polishing tool with a wipe dampened with alcohol and blow them dry with air.

Source: https://assist.dla.mil -- Downloaded: 2016-12-10T08:03Z
Check the source to verify that this is the current version before use.

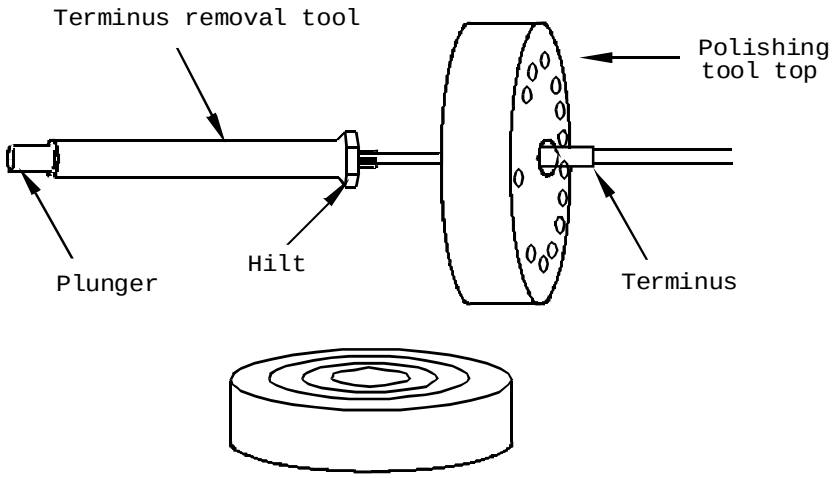

FIGURE 5A1-15. Removing the terminus from the polishing tool.

Step 11 -Repeat steps 1 through 10 for all of the termini.

3.2.4.2.2 Enhanced procedure. This procedure will produce a terminus with a domed end polish. This procedure is typically used for single mode applications with a minimum return loss requirement of 40 db, or when specified in the contract. Procedures for hand polishing are contained herein. Machine polishing may be used as an alternate method, provided the following requirements are satisfied:

a. The manufacturer's instructions will be rigidly adhered to, except that the polishing papers or disks shall be 5 um aluminum oxide foam backed, 1 um aluminum oxide mylar backed, 0.1 um diamond mylar backed, and ultrafine mylar backed as used in hand polishing. (NOTE: Alternate polishing materials may be used if authorized approval is obtained and the polishing machine includes the appropriate stops to prevent changes to the ferrule length.)

b. The machine polished terminus shall undergo the same quality check used for the manually polished terminus as described herein.

NOTE: The procedures contained herein should produce an optical terminus with a physical contact (PC) polish.

Step 1 - Perform steps 1 through 9 of the standard polish procedure.

Step 2 - Replace the 0.1 um paper with the ultrafine paper. Wet the paper and polish the terminus with light pressure using a figure-8 motion for 10 to 30 complete motions.

NOTE: The glossy side of the ultrafine paper should be placed facing the resilient pad.

NOTE: The polish tool should hydroplane above the paper surface during this polish.

Source: https://assist.dla.mil -- Downloaded: 2016-12-10T08:03Z
Check the source to verify that this is the current version before use.

Step 3 - Rotate the top of the polishing tool counterclockwise (90°) and separate the top from the base. Insert the terminus removal tool into the bottom of the terminus cavity of the polishing tool top and press on the hilt of the removal tool until the tool clicks into place (see figure 5A1-16). (NOTE: Make sure that the removal tool is clean before inserting the tool into the terminus cavity.) Depress the plunger and slide the terminus out of the polishing tool. Clean the terminus and the polishing tool with a wipe dampened with alcohol and blow them dry with air.

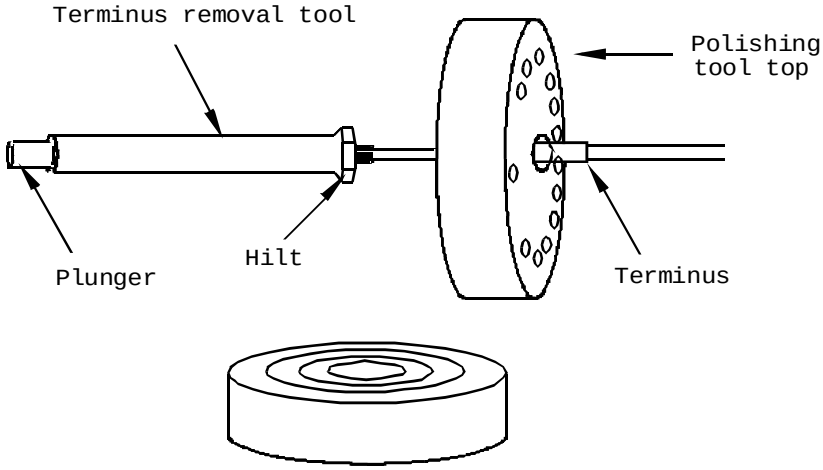

FIGURE 5A1-16. Removing the terminus from the polishing tool.

Step 4 - Repeat steps 1 through 3 for all of the termini.

3.2.5 Quality check.

Step 1 - Examine the terminus with the optical microscope to ensure that the optical surface is smooth and free of scratches, pits, chips, and fractures (see figure 5A1-17). If any defects are present, repeat the polish with the 0.1 um paper (and the ultrafine paper for enhanced polish termini) or reterminate the fiber. (NOTE: Do not polish the terminus more than necessary to pass the quality check.) A high intensity back light may be used to illuminate the fiber during the quality check.

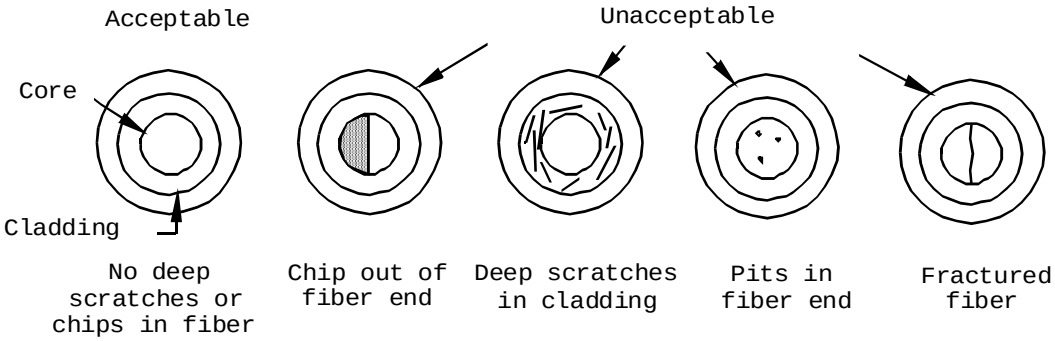

FIGURE 5A1-17. Quality check.

Source: https://assist.dla.mil -- Downloaded: 2016-12-10T08:03Z
Check the source to verify that this is the current version before use.

NOTE: Depending on the optical microscope used, viewing quality may be different.

NOTE: A small number of very light scratches (e.g. scratches that can barely be seen) is minimally acceptable.

3.2.6 Installation of the terminus into the connector insert.

3.2.6.1 Installation of the terminus into the connector insert for Veam backshells. This section is applicable only for removable backshells manufactured by Veam, Inc.

NOTE: The termini may be installed before or after the connector backshell has been assembled onto the connector shell. If the connector backshell has been assembled to the connector shell, the backshell sheath must be removed in order to install the termini.

NOTE: Inspect the connector insert for dirt or other debris before installing termini into the insert. Clean dirty inserts prior to installing termini.

Step 1 - Place the end of the terminus insertion tool at the rear of the crimp sleeve with the OFCC laid in the tool channel (see figure 5A1-13).

Step 2 - If it has not already been done, install the insert into the connector shell. (NOTE: Make sure that the insert key is properly aligned in the connector shell keyway before installing the insert.) Place the terminus in the proper cavity in the rear of the connector insert. Apply pressure with the insertion tool until the terminus snaps into place (see figure 5A1-18). Remove the tool by pulling straight back. (NOTE: A properly inserted terminus will have some axial "play" within the insert cavity.)

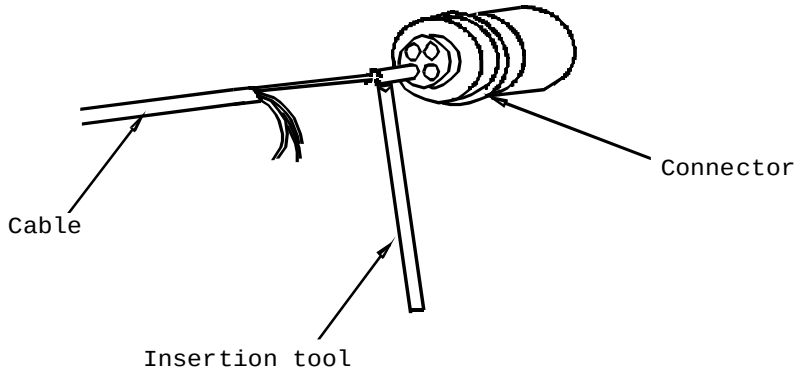

FIGURE 5A1-18. Installing the terminus in the insert.

NOTE: A socket terminus, unlike a pin terminus, will require installation of the alignment sleeve after seating the terminus. Proceed to step 3 below for socket termini. For pin termini repeat steps 1 and 2 for the rest of the termini.

Step 3 - Place the end of the socket terminus alignment sleeve installation and removal tool into the solid end of the alignment sleeve, depress the plunger to grasp the alignment sleeve, and place the sleeve into the

Source: https://assist.dla.mil -- Downloaded: 2016-12-10T08:03Z
Check the source to verify that this is the current version before use.

socket terminus cavity in the face of the insert (see figure 5A1-19). Release the plunger and press until the sleeve snaps onto the groove on the ceramic terminus body.

CAUTION: Do not rotate the tool after the sleeve is installed in the insert.

CAUTION: Do not press the sleeve into place with the plunger depressed. This may cause damage to the inner ceramic tube.

Remove the tool by pulling straight back. Proceed to step 4 below.

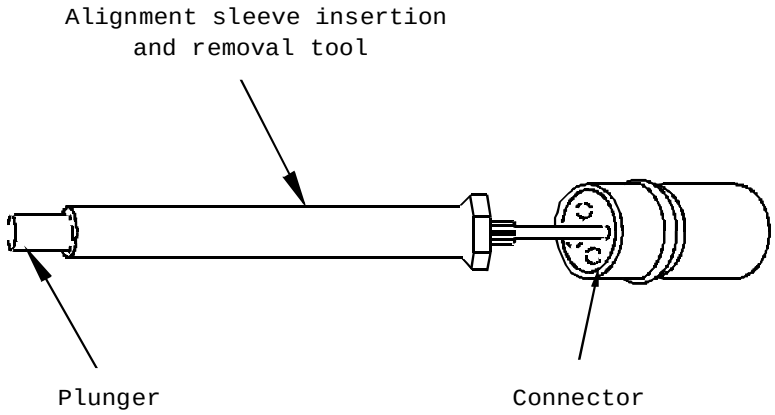

FIGURE 5A1-19. Installing the alignment sleeve.

Step 4 - Repeat steps 1 through 3 for all of the termini.

3.2.6.2 Installation of the terminus into the connector insert for Fiber Systems International backshells. This section is applicable only for removable backshells manufactured by Fiber Systems International, Inc.

(This section is intentionally left blank until Fiber Systems International products complete qualification testing.)

3.2.7 Removal of the termini from the connector insert.

NOTE: Perform this procedure only if the termini are to be removed from the connector.

NOTE: Proceed to step 1 below for socket termini. Proceed to step 2 below for pin termini.

Step 1 - CAUTION: Do not rotate the tool while the sleeve is in the insert.

Remove the alignment sleeves from the socket termini using the terminus alignment sleeve installation and removal tool by inserting the tool end into the alignment sleeve and depressing the plunger so that the tool grasps the sleeve. Pull the sleeve straight back. Proceed to step 2.

Step 2 - Insert the terminus removal tool into the terminus cavity from the front of the insert and press on the hilt of the tool until it snaps into place (see figure 5A1-20). (NOTE: Make sure that the removal

Source: https://assist.dla.mil -- Downloaded: 2016-12-10T08:03Z
Check the source to verify that this is the current version before use.

tool is clean before inserting the tool into the terminus cavity.) Depress the plunger to slide the terminus out the rear of the insert.

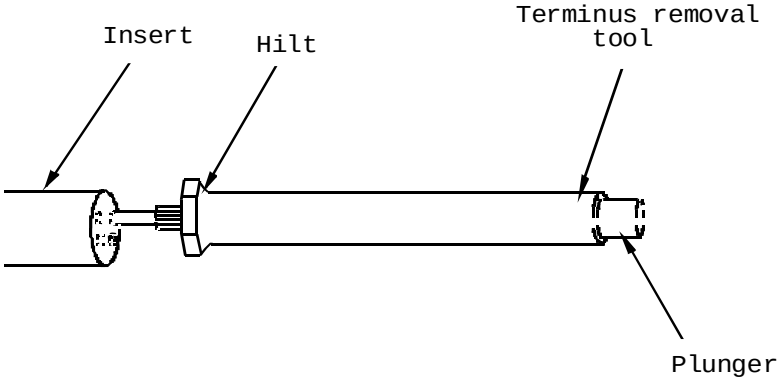

FIGURE 5A1-20. Removing the terminus from the insert.

3.2.8 Assembly of backshell.

3.2.8.1 Assembly of the Veam backshell. This section is applicable only for removable backshells manufactured by Veam, Inc.

NOTE: If the termini have been installed in the connector insert previously, take care to not pinch or twist the OFCCs during this procedure.

Step 1 - Slide the backshell body forward and screw it onto the connector shell until tight. (NOTE: Loctite or a similar material may be used to secure the backshell body to the connector shell. If Loctite or a similar material is used, use it sparingly.)

Step 2 - Remove the tape securing the kevlar strength members and slide the ferrule (kevlar grip) up to rear of backshell capturing the kevlar between the backshell and kevlar grip. Comb the kevlar over kevlar grip and retape the kevlar to the cable.

Step 3 - Slide the spacer over the kevlar up to the rear of the kevlar grip.

Step 4 - Remove the tape and trim the kevlar approximately 6 mm (0.25 in) behind the spacer using the kevlar shears.

Step 5 - Slide the O-ring up behind the spacer, keeping the kevlar strands between the O-ring and the spacer.

Step 6 - Slide the backnut forward over the O-ring, spacer, and kevlar grip and screw it tightly to the backshell body (NOTE: Use an adjustable wrench on the backshell body flats and the backshell grip on the backnut. Use care to not nick or scratch the backshell coating during assembly.)

Step 7 - Apply O-ring lube to the O-rings on the sheath and slide the sheath forward and screw it onto the backshell body until it is tight.

Step 8 - Install the plastic protective cap over the front of the connector.

Source: https://assist.dla.mil -- Downloaded: 2016-12-10T08:03Z
Check the source to verify that this is the current version before use.

3.2.8.2 Assembly of the Fiber Systems International backshell. This section is applicable only for removable backshells manufactured by Fiber Systems International, Inc.

(This section is intentionally left blank until Fiber Systems International products complete qualification testing.)

3.3 Procedure II. Method 5A1-2 Installation of connectors with integral backshells. This method shall be used to install connectors manufactured by Packard Hughes Interconnect with part numbers M28876/2, M28876/3, M28876/4, M28876/7, M28876/8, M28876/9, M28876/12, M28876/13, and M28876/14 onto fiber optic cables. Connectors manufactured by Fiber Systems International with part numbers M28876/2, M28876/3, M28876/4, M28876/7, M28876/8, M28876/9, M28876/12, M28876/13, and M28876/14 shall be installed onto fiber optic cables using Method 5A1-1.

3.3.1 The equipment and materials in table 5A1-III shall be used to perform this procedure:

TABLE 5A1-III. Equipment and materials.

Description	Quantity
Ruler	1
Wipes (NAVSEA DWG 6872813-22 or equal)	As required
Alcohol bottle with alcohol/2-propanol or equal (sealable type)	1
Canned air or compressed air	As required
Cable jacket stripping tool (NAVSEA DWG 6872813-8 or equal)	1
Masking tape	As required
O-ring lubricant (Bray Cote 609 or equal)	As required
O-ring tools (NAVSEA DWG 6872813-38, 39, or 40 or equal)	As required
Shell size 23 O-ring tool (Packard Hughes 1143212-13H or equal)	1
Spanner wrench (NAVSEA DWG 6872813-34 or equal)	1
Torque wrench adapters (NAVSEA DWG 6872813-35, 36, or 37 or equal)	As required
Hex adapter (NAVSEA DWG 6872813-29)	1
Torque wrench (NAVSEA DWG 6872813-1 or equal)	1
Heat gun	1

Source: https://assist.dla.mil -- Downloaded: 2016-12-10T08:03Z
Check the source to verify that this is the current version before use.

TABLE 5A1-III. Equipment and materials - continued.

Description	Quantity
Kevlar shears (NAVSEA DWG 6872813-16 or equal)	1
OFCC strip tool (NAVSEA DWG 6872813-10 or equal)	1
Safety glasses	1
Buffer strip tool (NAVSEA DWG 6872813-9 or equal)	1
Cleaning wire (NAVSEA DWG 6872813-32 or equal)	As required
Epoxy (MIL-PRF-24792)	As required
Syringe with dispensing needles (NAVSEA DWG 6872813-27 or equal)	As required
Crimp tool (NAVSEA DWG 6872813-17 or equal)	1
Razor blade	1
Cure adapters (NAVSEA DWG 6872813-19 or equal)	As required
Curing oven (NAVSEA DWG 6872813-19 or equal)	1
Cable stand (NAVSEA DWG 6872813-19 or equal)	1
Cable stand ring (NAVSEA DWG 6872813-19 or equal)	1
Cable clip (NAVSEA DWG 6872813-19 or equal)	1
Cleaver (NAVSEA DWG 6872813-7 or equal)	1
Polishing paper (5 um aluminum oxide, foam backed) (NAVSEA DWG 6872813-24 or equal)	As required
Polishing tool ceramic termini (NAVSEA DWG 6872813-18 or equal)	1
Terminus insertion tool (NAVSEA DWG 6872813-2 or equal)	1
Terminus insertion tool 90° (NAVSEA DWG 6872813-15 or equal)	1
Glass polishing plate (NAVSEA DWG 6872813-3 or equal)	1
7X eye loupe	1
Polishing paper (1 um aluminum oxide, mylar backed) (NAVSEA DWG 6872813-23 or equal)	As required
Water bottle (sealable type)	1

Source: https://assist.dla.mil -- Downloaded: 2016-12-10T08:03Z
Check the source to verify that this is the current version before use.

TABLE 5A1-III. Equipment and materials - continued.

Description	Quantity
Terminus removal tool (NAVSEA DWG 6872813-6 or equal)	1
Optical microscope 400X (NAVSEA DWG 6872813-28 or equal)	1
Alignment sleeve insertion and removal tool (ceramic termini)(NAVSEA DWG 6872813-4 or equal)	1
Backshell grip	1
Adjustable wrench	1
Protective caps (plastic)	As required
Cold shrink tubing (3M CST 045-095-600 or equal)	As required
40.0 mm (1.57 in) inside diameter heat shrink tubing (Raychem ATUM or equal)	As required
Strap wrench	1
Polishing paper (0.1 um diamond, mylar backed) (NAVSEA DWG 6872813-41 or equal)	As required
Resilient pad (70 to 90 durometer)(NAVSEA DWG 6872813-42 or equal)	1
Polishing paper (ultrafine, mylar backed) (JDS Optics HF5D or equal)	As required
Flat washer (steel SAE number 8 or equal)	As required
Tapered tube plug (6 fiber bundle, 2 to 6 individual fibers) (AA59730-TTP-2)	As required
Tapered tube plug (12 or 18 fiber bundle, 8 to 12 individual fibers) (AA59730-TTP-3)	As required
Adhesive and sealant tape (Raychem SFTS-1 or equal)	As required
Tube cutter	1
Bundle jacket stripper (18 gauge for 6-fiber bundles)	1
Bundle jacket stripper (12 gauge for 18-fiber bundles)	1
Clear jacket stripper (20 gauge for 6-fiber bundles)	1
3 mm (1/8 in) shrink sleeve (6 mm in length)	As required
Silicone caulking compound (CID A-A-00272 or equal)	As required

Source: https://assist.dla.mil -- Downloaded: 2016-12-10T08:03Z
Check the source to verify that this is the current version before use.

CAUTION: Throughout the termination process, cleanliness is critical to obtaining a high optical quality connector. Make sure that your hands and the work area are as clean as possible to minimize the ingress of dirt into the connector parts.

NOTE: Verify that the epoxy shelf life has not expired. Do not use epoxy with an expiration date that has passed. Epoxy shelf life can be extended if the epoxy is refrigerated. Contact the epoxy vendor or the Naval Surface Warfare Center (see 1.1.1) for additional information.

3.3.2 Cable preparation.

NOTE: The connector is received assembled with O-rings installed, with the exception of the kevlar retaining O-ring and the cable sealing O-ring (shell size 23 only) that are packaged with the backshell.

Step 1 - Ensure cable is the correct type as specified on the applicable cable diagram.

Step 2- Measure the cable to the required length. Then add sufficient slack to allow for at least two reterminations [180 mm (7 in) of slack should be sufficient for one retermination].

NOTE: If a BOF cable is being prepared, allow 305 mm (12 in) for each termination.

Step 3 - Clean the outer cable jacket that will be in contact with the connector and backshell with a wipe dampened with alcohol and blow it dry with air.

NOTE: Keep the cable and connector parts free from oil, dirt, and grease throughout the installation procedure. If cleaning is necessary, use a wipe dampened with alcohol and blow the parts dry with air.

3.3.3 Securing the strain relief (conventional cable).

3.3.3.1 Securing the strain relief (Shell size 11, 13, 15 and 23).

Note: For an optional method for shell size 23 connectors, see 3.3.3.2.

Step 1 - Slide the strain relief onto the cable in the order indicated (see figure 5A1-21):

a. Compression nut with boot

b. Outer heat shrink tubing with a 50 mm (2 in) length (supplied with connector)

c. O-ring and inner heat shrink tubing with a 50 mm (2 in) length (supplied with shell size 23 connector only)

d. Strain relief housing

e. Compression ring

Source: https://assist.dla.mil -- Downloaded: 2016-12-10T08:03Z
Check the source to verify that this is the current version before use.

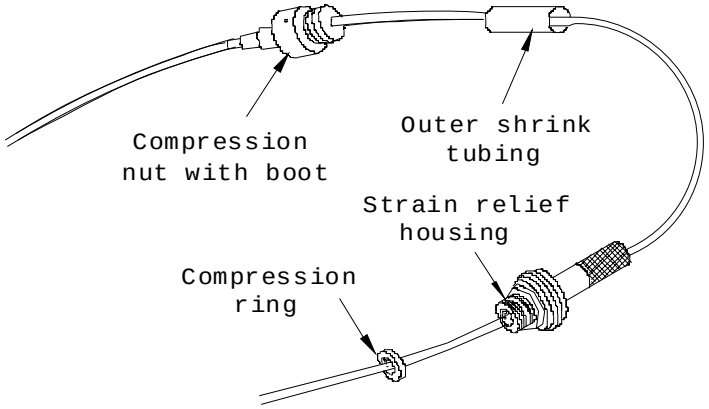

FIGURE 5A1-21. Strain relief parts on the cable.

NOTE: The grooved side of the compression ring should face the strain relief housing.

Step 2 - Mark the cable approximately 165 mm (6.5 in) from the end and strip back the outer cable jacket using the cable jacket strip tool. Fold back the kevlar strength members and temporarily tape them to the cable outer jacket.

NOTE: The cable core should not be bent beyond the minimum bend diameter when removing the cable jacket. If the cable core is bent beyond the minimum bend diameter during cable jacket removal, optical fiber damage may occur.

CAUTION: Do not cut or nick the OFCC jackets.

Cut off the exposed central member and any fillers using the kevlar shears.

Step 3 - Remove any water blocking material and clean the OFCCs using a wipe dampened with alcohol and blow them dry with air.

Step 4 - Remove the tape from the kevlar strength members and fold them forward. Slide the compression ring to the end of the cable jacket. (NOTE: The grooved side of ring should face the strain relief housing.) Fold the kevlar strength members back over the compression ring and the cable in the direction of the strain relief housing.

Step 5 - Remove the O-ring from the package and apply O-ring lubricant. Place the O-ring on the O-ring installation tool by forcing the O-ring up the cone to the larger end of the tool.

Step 6 - Slide the O-ring tool up the OFCCs (larger opening first) over the compression ring (and kevlar strength members) and force the O-ring over the compression ring onto the kevlar (see figure 5A1-22). Remove the O-ring tool.

Source: https://assist.dla.mil -- Downloaded: 2016-12-10T08:03Z
Check the source to verify that this is the current version before use.

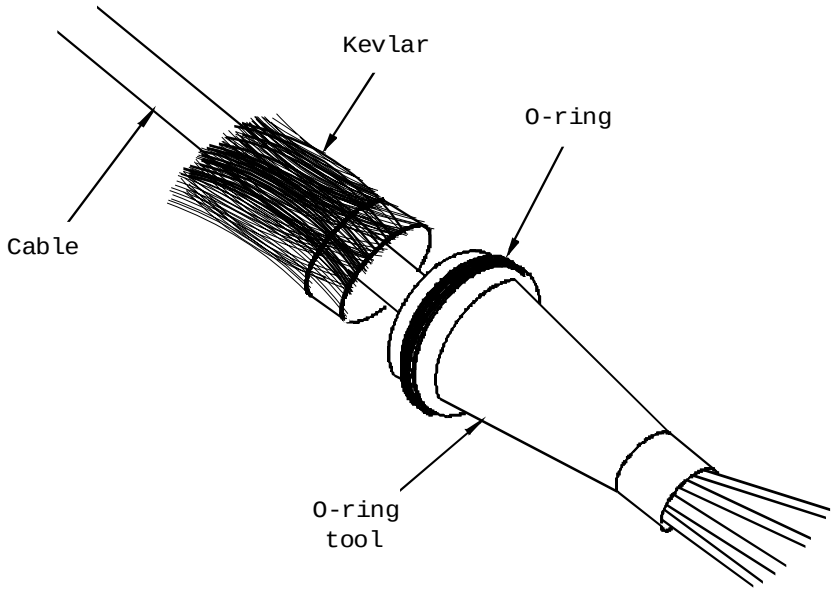

FIGURE 5A1-22. Installing the O-ring.

Step 7 - Fold the kevlar strength members forward over the O-ring and the compression ring. Tape the kevlar members to the OFCCs to ease the installation of the kevlar compression nut.

NOTE: The kevlar should be uniformly arranged around the compression ring.

Step 8 - Slide the strain relief housing up the cable to the compression ring. Gently feed the OFCCs and kevlar through the kevlar compression nut and slide the nut up to the strain relief housing. Thread the compression nut onto the strain relief housing while pulling the kevlar taut.

NOTE: If the compression nut cannot be threaded onto the strain relief housing because of the amount of kevlar in the optical fiber cable, remove the compression nut and ring from the cable, trim back some of the cable kevlar to the cable jacket, and return to step 4. The amount of kevlar trimmed should be the minimum amount necessary to allow the compression nut to thread onto the strain relief housing. The kevlar should be trimmed uniformly around the circumference of the cable.

Step 9 - Tighten the kevlar compression nut to 2.75 N·m (25 inch-pounds) using the wrench, the torque adapter, the hex adapter, and the torque tool (see figure 5A1-23). Remove the wrench and the other tools.

NOTE: For shell size 23, use the torque wrench inserted into the strap wrench instead of into the hex adapter/torque wrench adapter.

Source: https://assist.dla.mil -- Downloaded: 2016-12-10T08:03Z
Check the source to verify that this is the current version before use.

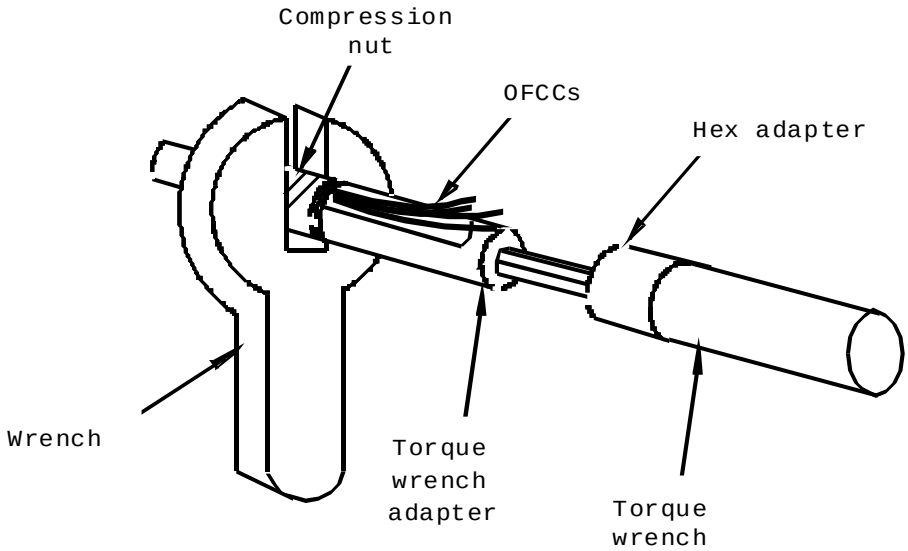

FIGURE 5A1-23. Tightening the kevlar compression nut.

Step 10 - Remove the tape and trim the kevlar down to the face of the kevlar compression nut using the kevlar shears.

NOTE: The following steps may be performed at this time or later in the connector assembly process before final assembly of the backshell (see 3.3.10).

Step 11 - For shell size 23 only, slide the second o-ring over the jacket until it butts up against the knurled end of the strain relief housing.

Step 12 - For shell size 23 only, slide the 50 mm (2 in) length of inner heat shrink tubing over the jacket until it butts up against the O-ring.

CAUTION: Do not overheat the cable. Prolonged exposure of the jacket to temperatures above 160°C (320°F) may damage the cable jacket. Discontinue heating of the tubing and allow the cable jacket to cool before reheating if the cable jacket shows any signs of bubbling or necking.

Starting at the cable end of the heat shrink tubing, hold the heat gun approximately 100 mm (4 in) from the tubing and apply heat until the tubing shrinks to a tight fit and sealant is visible at the ends.

Step 13 - Slide the 50 mm (2 in) length of outer heat shrink tubing over the O-ring and knurled end of the strain relief housing up to the shoulder.

CAUTION: Do not overheat the cable. Prolonged exposure of the jacket to temperatures above 160°C (320°F) may damage the cable jacket. Discontinue heating of the tubing and allow the cable jacket to cool before reheating if the cable jacket shows any signs of bubbling or necking.

Starting at the strain relief housing, hold the heat gun approximately 100 mm (4 in) from the tubing and apply heat until the tubing shrinks to a tight fit and sealant is visible at the ends.

Source: https://assist.dla.mil -- Downloaded: 2016-12-10T08:03Z
Check the source to verify that this is the current version before use.

Step 14 -Proceed to fiber preparation (section 3.3.4).

3.3.3.2 Securing the strain relief (Shell size 23 optional method). This method is useful when the multifiber cable pinout is different than the OFCC physical arrangement within the multifiber cable.

Step 1 - Slide the strain relief onto cable in the order indicated (see figure 5A1-24):

a. Compression nut

b. Outer heat shrink tubing with a 200 mm (8 in) minimum length

c. O-ring and inner heat shrink tubing with a 50 mm (2 in) length (supplied with connector)

d. Strain relief housing

e. Inner cold shrink tubing with a 150 mm (6 in) minimum length

f. Compression ring

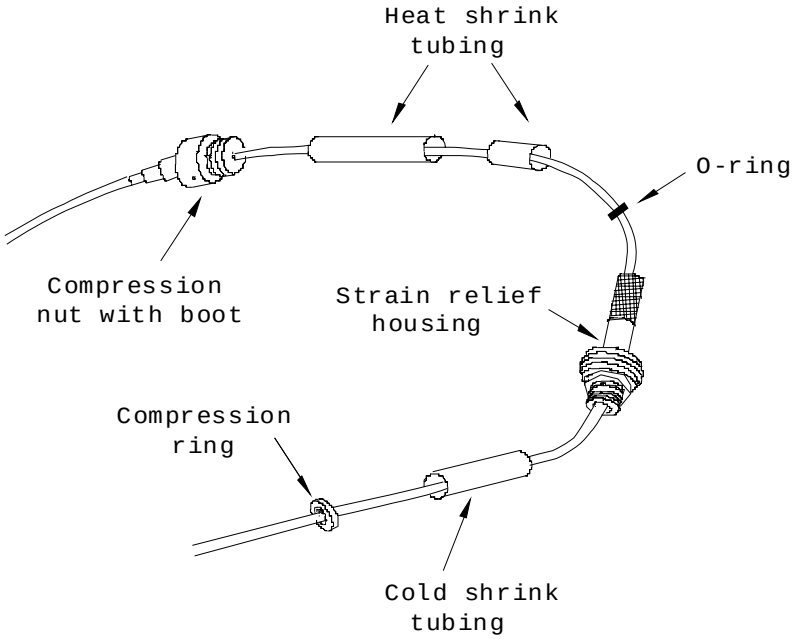

FIGURE 5A1-24. Strain relief parts on the cable.

Step 2 - Mark the cable approximately 317 mm (12.5 in) from the end and strip back the outer cable jacket using the cable jacket strip tool. Fold back the kevlar strength members and temporarily tape them to the cable outer jacket.

NOTE: The cable core should not be bent beyond the minimum bend diameter when removing the cable jacket. If the cable core is bent beyond the minimum bend diameter during cable jacket removal, optical fiber damage may occur.

Source: https://assist.dla.mil -- Downloaded: 2016-12-10T08:03Z
Check the source to verify that this is the current version before use.

CAUTION: Do not cut or nick the OFCC jackets.

Cut off the exposed central member and any fillers using the kevlar shears.

Step 3 - Remove any water blocking material and clean the OFCCs using a wipe dampened with alcohol and blow them dry with air.

Step 4 - Arrange the cable OFCCs so that the OFCCs are in the proper physical configuration for insertion into the connector insert once terminated. OFCCs can be gently woven or laced to accomplish this.

Step 5 - Proceed with fiber preparation, installation of termini onto fibers, polishing the fiber ends, and quality check before continuing this procedure.

NOTE: The cable jacket strip length used in the fiber preparation process should be increased by 163 mm (6.4 in) due to the increased length of cable jacket removed in this procedure.

Step 6 - Remove the tape from the kevlar strength members and fold them forward. Slide the compression ring to the rear of the termini. (NOTE: The grooved side of ring should face away from the termini.)

Step 7 - Slide the inner cold shrink tubing over the end of the cable jacket until it lies completely over the kevlar and OFCCs. Shrink the tubing down over the kevlar and OFCCs.

NOTE: There should not be a gap between the end of the cable jacket and the end of the inner cold shrink tubing. In addition, the inner shrink tubing should not overlap the end of the cable jacket.

Step 8 - Slide the compression ring back over the kevlar until it is even with the end of the inner cold shrink tubing. Fold the kevlar strength members back over the compression ring and the cable in the direction of the strain relief housing.

Step 9 - Remove the O-ring (taped to the backshell exterior) and apply O-ring lubricant. Place the O-ring on the O-ring installation tool by forcing the O-ring up the cone to the larger end of the tool.

Step 10 - Slide the O-ring tool up the OFCCs (larger opening first) over the compression ring (and kevlar strength members) and force the O-ring over the compression ring onto the kevlar (see figure 5A1-25). Remove the O-ring tool.

Source: https://assist.dla.mil -- Downloaded: 2016-12-10T08:03Z
Check the source to verify that this is the current version before use.

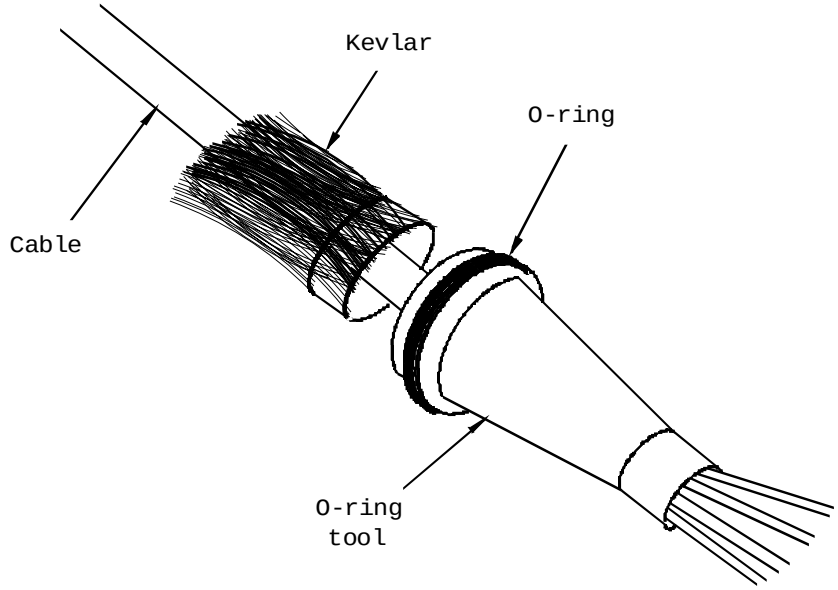

FIGURE 5A1-25. Installing the O-ring.

NOTE: The termini must be fed through the O-ring tool in groups of 4 to 8 before the O-ring tool can slide up the OFCCs.

Step 11 -Fold the kevlar strength members forward over the O-ring and the compression ring. Tape the kevlar members to the OFCCs to ease the installation of the kevlar compression nut.

Step 12 -Slide the strain relief housing up the cable to the compression ring. Gently feed the OFCCs and kevlar through the kevlar compression nut and slide the nut up to the strain relief housing. Thread the compression nut onto the strain relief housing while pulling the kevlar taut.

NOTE: The termini must be fed through the compression nut in groups of 4 to 8 before the compression nut can slide up to the strain relief housing.

Step 13 -Tighten the kevlar compression nut to 2.75 N·m (25 inch-pounds) using the wrench, the strap wrench, and the torque tool. Remove the wrench and the other tools.

Step 14 -Remove the tape and trim the kevlar down to the face of the kevlar compression nut using the kevlar shears.

Step 15 -Slide the second O-ring over the jacket and inner shrink tubing until it butts up against the knurled end of the strain relief housing.

Step 16 -Slide the 50 mm (2 in) length of inner heat shrink tubing over the cold shrink tubing until it butts up against the O-ring. Starting at the cable end of the heat shrink tubing, hold the heat gun approximately 100 mm (4 in) from the tubing and apply heat until the tubing shrinks to a tight fit and sealant is visible at the ends.

CAUTION: Do not overheat the cable. Prolonged exposure of the cold shrink tubing to temperatures above 160°C (320°F) may damage the cold shrink tubing. Discontinue heating of the heat shrink tubing and

Source: https://assist.dla.mil -- Downloaded: 2016-12-10T08:03Z
Check the source to verify that this is the current version before use.

allow the cold shrink tubing to cool before reheating if the cold shrink tubing shows any signs of bubbling or necking.

Step 17 - Slide the outer heat shrink tubing over the o-ring and knurled end of the strain relief housing up to the shoulder. Shrink the outer shrink tubing down over the strain relief housing, the o-ring, the inner shrink tubing and the cable jacket.

CAUTION: Do not overheat the cable. Prolonged exposure of the jacket to temperatures above 160°C (320°F) may damage the cable jacket. Discontinue heating of the tubing and allow the cable jacket to cool before reheating if the cable jacket shows any signs of bubbling or necking.

Starting at the strain relief housing, hold the heat gun approximately 100 (4 in) from the tubing and apply heat until the tubing shrinks to a tight fit and sealant is visible at the ends.

3.3.4 Securing the strain relief (BOF cable).

3.3.4.1 Shell size 13.

NOTE: If the number of fibers in the BOF tube exceeds the number of fibers to be terminated, the additional fibers should not be cut off until after the fibers to be terminated are successfully terminated.

Step 1 - Cut off the boot of the compression nut using a razor blade so that only the largest diameter boot section remains on the compression nut.

NOTE: This will allow the boot to slide onto the single tube-cable.

Step 2 - CAUTION: Do not cut or nick the BOF tube when removing the cable jacket.

Mark the cable approximately 305 mm (12.0 in) from the end and strip back the outer cable jacket using the cable jacket strip tool. Fold back the kevlar strength members over the cable outer jacket.

NOTE: The cable core should not be bent beyond the minimum bend diameter when removing the cable jacket. If the cable core is bent beyond the minimum bend diameter during cable jacket removal, BOF tube damage may occur.

Step 3 - Remove any water blocking material and clean the BOF tube using a wipe dampened with alcohol and blow it dry with air.

Step 4 - Pull the kevlar strength members forward over the BOF tube, and tape them to the BOF tube. Slide the strain relief onto the cable in the order indicated (see figure 5A1-26):

a. Compression nut with boot

b. Outer heat shrink tubing with a 50 mm (2 in) length (supplied with connector)

c. Strain relief housing

d. Compression ring

Source: https://assist.dla.mil -- Downloaded: 2016-12-10T08:03Z
Check the source to verify that this is the current version before use.

NOTE: The compression nut with boot and the outer heat shrink tubing will be the only parts that will go over the single-tube cable jacket. The strain relief housing and the compression ring will stop at the edge of the single-tube cable jacket.

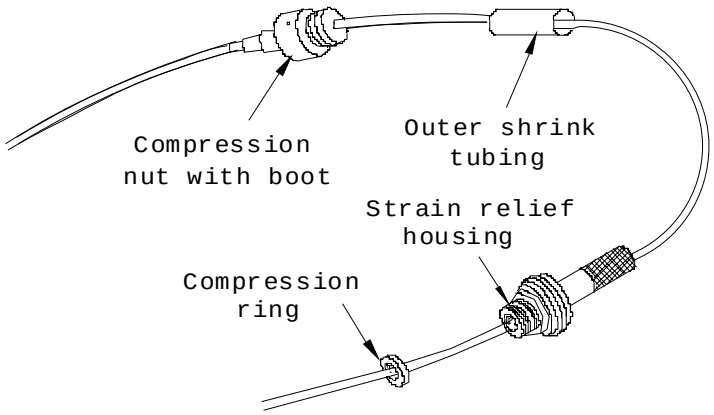

FIGURE 5A1-26. Strain relief parts on the cable.

Step 5 - Remove the tape from the kevlar strength members and fold them back over the compression ring and single tube-cable in the direction of the strain relief housing. (NOTE: The grooved side of the compression ring should face the strain relief housing.)

Step 6 - CAUTION: Do not cut or nick the BOF fibers when cutting back the BOF tube.

Cut the BOF tube at the front of the compression ring using a razor blade or tube cutter and remove the BOF tube.

Step 7 - Remove the O-ring from the package and apply O-ring lubricant. Place the O-ring on the O-ring installation tool by forcing the O-ring up the cone to the larger end of the tool.

Step 8 - Slide the O-ring tool up the BOF bundle or fibers (larger opening first) over the compression ring (and kevlar strength members) and force the O-ring over the compression ring onto the kevlar (see figure 5A1-27). Remove the O-ring tool.

Source: https://assist.dla.mil -- Downloaded: 2016-12-10T08:03Z
Check the source to verify that this is the current version before use.

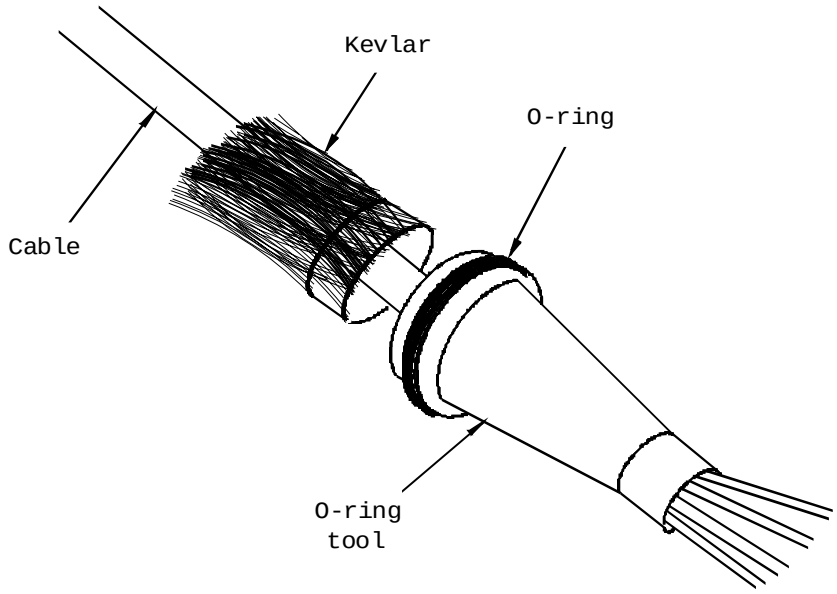

FIGURE 5A1-27. Installing the O-ring.

Step 9 - For tubes containing BOF bundles only:

a. Place the appropriate tapered tube plug around the exposed bundle jacket approximately 12 mm (0.5 in) from the end of the BOF tube.

b. Press the plug into the BOF tube.

NOTE: The tapered tube plug may be coated with silicone caulking compound before assembly into the tube for enhanced watertight sealing.

NOTE: Do not pull slack fiber bundle out of the BOF tube before assembling the plug to the bundle jacket.

NOTE: The optical fiber bundle should now be fixed in the tapered tube plug and should not move into or out of the BOF tube during the connector assembly or fiber termination processes.

Step 10 -For tubes containing individual BOF fibers only:

a. Work a small amount of sealant tape around the optical fibers approximately 12 mm (0.5 in) from the end of the BOF tube.

b. Place the appropriate tapered tube plug around the optical fibers and sealant tape.

c. Press the plug into the BOF tube.

NOTE: The tapered tube plug may be coated with silicone caulking compound before assembly into the tube for enhanced watertight sealing.

NOTE: Do not pull slack fiber out of the BOF tube before assembling the plug to the fibers.

Source: https://assist.dla.mil -- Downloaded: 2016-12-10T08:03Z
Check the source to verify that this is the current version before use.

NOTE: The optical fibers should now be fixed in the tapered tube plug and should not move into or out of the BOF tube during the connector assembly or fiber termination processes.

Step 11 - Fold the kevlar strength members forward over the O-ring and the compression ring. Tape the kevlar and BOF bundle or BOF fibers together at the end.

NOTE: Taping the kevlar and BOF bundle or BOF fibers together eases the installation of the kevlar compression nut.

NOTE: The kevlar should be uniformly arranged around the compression ring.

Step 12 - Gently feed the BOF bundle, or fibers, and kevlar through the kevlar compression nut and slide the nut up to the strain relief housing. Thread the compression nut onto the strain relief housing.

NOTE: If the compression nut cannot be threaded onto the strain relief housing because of the amount of kevlar in the single tube-cable, remove the compression nut and ring from the cable, trim back some of the cable kevlar to the cable jacket, and return to step 5. The amount of kevlar trimmed should be the minimum amount necessary to allow the compression nut to thread onto the strain relief housing. The kevlar should be trimmed uniformly around the circumference of the cable.

Step 13 - CAUTION: Do not cut or nick the BOF fibers when cutting back the kevlar.

Tighten the kevlar compression nut to 2.75 N·m (25 inch-pounds) using the wrench, the torque adapter, the hex adapter, and the torque tool (see figure 5A1-28). Remove the wrench and the other tools. Trim the excess kevlar even with the face of the kevlar compression nut using the kevlar shears.

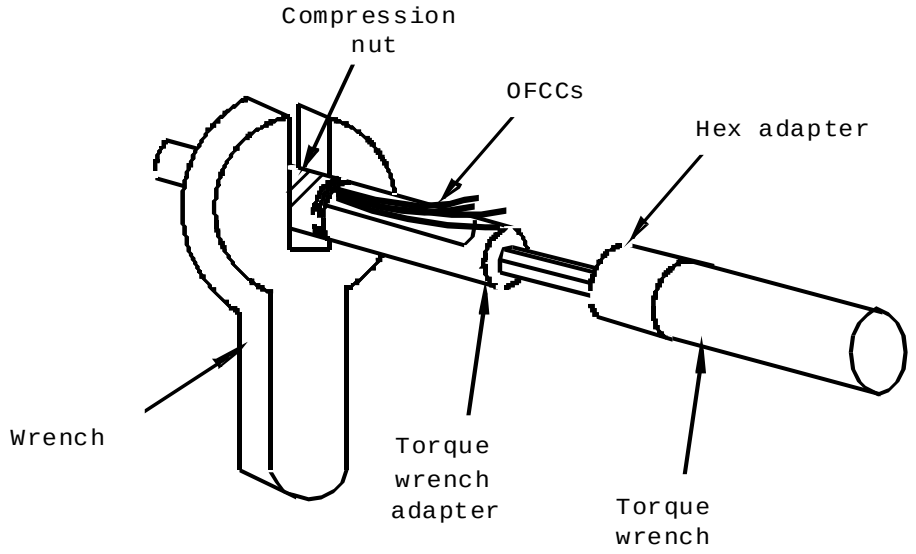

FIGURE 5A1-28. Tightening the kevlar compression nut.

Source: https://assist.dla.mil -- Downloaded: 2016-12-10T08:03Z
Check the source to verify that this is the current version before use.

NOTE: The following steps may be performed at this time or later in the connector assembly process before final assembly of the backshell (see 3.3.10).

Step 14 - Slide the 50 mm length (2 in) length of outer heat shrink tubing over the knurled end of the strain relief housing up to the shoulder.

CAUTION: Do not overheat the cable. Prolonged exposure of the jacket to temperatures above 160°C (320°F) may damage the cable jacket. Discontinue heating of the tubing and allow the cable jacket to cool before reheating if the cable jacket shows any signs of bubbling or necking.

Starting at the strain relief housing, hold the heat gun approximately 100 mm (4 in) from the tubing and apply heat until the tubing shrinks to a tight fit and sealant is visible at the ends.

NOTE: Ensure that the heat shrink is properly sealed to the cable and connector. The heat shrink on the connector is an integral part of the BOF tube system watertight integrity.

Step 15 - For tubes containing BOF bundles only:

a. Using the bundle jacket stripper, remove the exposed bundle jacket in approximately 160 mm (6 in) lengths until all of the exposed bundle jacket is removed.

NOTE: Once a short length of the bundle jacket has been removed, the remaining length can normally be torn off of the bundle by hand.

b. Using the clear jacket stripper, remove approximately 80 mm (3.0 in) of the clear inner jacket from the end of the 6-fiber subunit.

NOTE: If clear jacket stripper does not bite into the clear inner jacket, position the clear jacket stripper at a 30 to 40 degree angle to increase its bite.

c. Find the ripcord from among the six fibers. Ensure that it is not crossed with any of the fibers. While holding the group of fibers in one hand, pull the ripcord along the bundle with the other hand. Pull the ripcord until it reaches the beginning of the bundle jacket.

NOTE: The ripcord and fibers spiral along the bundle length. Take care to follow the spiral when pulling the ripcord.

d. Starting at the end of the fiber bundle subunit, carefully pull the group of fibers from the clear inner jacket.

e. Using the scissors, carefully cut away the ripcord and the clear inner jacket.

3.3.4.2 Shell size 15.

NOTE: If the number of fibers in the BOF tube exceeds the number of fibers to be terminated, the additional fibers should not be cut off until after the fibers to be terminated are successfully terminated.

Source: https://assist.dla.mil -- Downloaded: 2016-12-10T08:03Z
Check the source to verify that this is the current version before use.

Step 1 - CAUTION: Do not cut or nick the BOF tube when removing the cable jacket.

Mark the cable approximately 305 mm (12.0 in) from the end and strip back the outer cable jacket using the cable jacket strip tool. Fold back the kevlar strength members over the cable outer jacket and remove any water blocking material from the exposed cable core.

NOTE: The cable core should not be bent beyond the minimum bend diameter when removing the cable jacket. If the cable core is bent beyond the minimum bend diameter during cable jacket removal, BOF tube and fiber damage may occur.

Step 2 - Pull the kevlar strength members forward over the BOF tube, and tape them to the BOF tube. Slide the strain relief onto the cable in the order indicated (see figure 5A1-29):

a. Compression nut with boot

b. Outer heat shrink tubing with a 50 mm (2 in) length (supplied with connector)

c. Strain relief housing

e. Compression ring

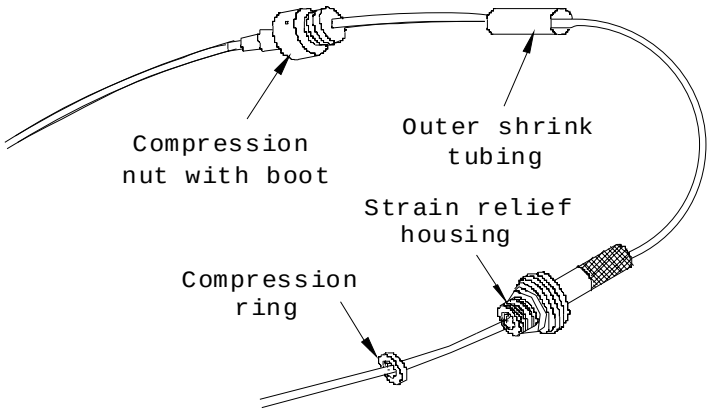

FIGURE 5A1-29. Strain relief parts on the cable.

Step 3 - Remove the tape from the kevlar strength members and fold them back over the compression ring and single tube-cable in the direction of the strain relief housing. (NOTE: The grooved side of the compression ring should face the strain relief housing.)

Step 4 - CAUTION: Do not cut or nick the BOF fibers when cutting back the BOF tube.

Cut the BOF tube at the front of the compression ring using a razor blade or tube cutter and remove the BOF tube.

Step 5 - Remove the O-ring from the package and apply O-ring lubricant. Place the O-ring on the O-ring installation tool by forcing the O-ring up the cone to the larger end of the tool.

Source: https://assist.dla.mil -- Downloaded: 2016-12-10T08:03Z
Check the source to verify that this is the current version before use.

Step 6 - Slide the O-ring tool up the BOF bundle or fibers (larger opening first) over the compression ring (and kevlar strength members) and force the O-ring over the compression ring onto the kevlar (see figure 5A1-30). Remove the O-ring tool.

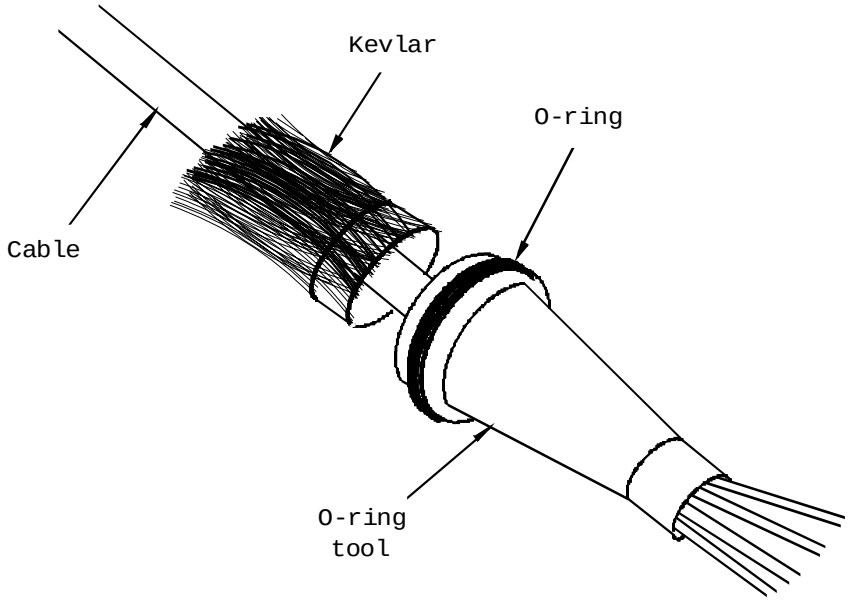

FIGURE 5A1-30. Installing the O-ring.

Step 7 - For tubes containing BOF bundles only:

a. Place the appropriate tapered tube plug around the exposed bundle jacket approximately 12 mm (0.5 in) from the end of the BOF tube.

b. Press the plug into the BOF tube.

NOTE: The tapered tube plug may be coated with silicone caulking compound before assembly into the tube for enhanced watertight sealing.

NOTE: Do not pull slack fiber bundle out of the BOF tube before assembling the plug to the bundle jacket.

NOTE: The optical fiber bundle should now be fixed in the tapered tube plug and should not move into or out of the BOF tube during the connector assembly or fiber termination processes.

Step 8 - For tubes containing individual BOF fibers only:

a. Work a small amount of sealant tape around the optical fibers approximately 12 mm (0.5 in) from the end of the BOF tube.

b. Place the appropriate tapered tube plug around the optical fibers and sealant tape.

c. Press the plug into the BOF tube.

Source: https://assist.dla.mil -- Downloaded: 2016-12-10T08:03Z
Check the source to verify that this is the current version before use.

NOTE: The tapered tube plug may be coated with silicone caulking compound before assembly into the tube for enhanced watertight sealing.

NOTE: Do not pull slack fiber out of the BOF tube before assembling the plug to the fibers.

NOTE: The optical fibers should now be fixed in the tapered tube plug and should not move into or out of the BOF tube during the connector assembly or fiber termination processes.

Step 9 - Fold the kevlar strength members forward over the O-ring and the compression ring. Tape the kevlar and BOF bundle or BOF fibers together at the end.

NOTE: Taping the kevlar and BOF bundle or BOF fibers together eases the installation of the kevlar compression nut.

NOTE: The kevlar should be uniformly arranged around the compression ring.

Step 10 - Gently feed the BOF bundle, or fibers, and kevlar through the flat washer and slide the washer up to the strain relief housing.

Step 11 - Gently feed the BOF bundle, or fibers, and kevlar through the kevlar compression nut and slide the nut up to the flat washer and strain relief housing. Thread the compression nut onto the strain relief housing.

NOTE: If the compression nut cannot be threaded onto the strain relief housing because of the amount of kevlar in the single tube-cable, remove the compression nut and ring from the cable, trim back some of the cable kevlar to the cable jacket, and return to step 3. The amount of kevlar trimmed should be the minimum amount necessary to allow the compression nut to thread onto the strain relief housing. The kevlar should be trimmed uniformly around the circumference of the cable.

Step 12 - CAUTION: Do not cut or nick the BOF fibers when cutting back the kevlar.

Tighten the kevlar compression nut to 2.75 N·m (25 inch-pounds) using the wrench, the torque adapter, the hex adapter, and the torque tool (see figure 5A1-31). Remove the wrench and the other tools. Trim the excess kevlar even with the face of the kevlar compression nut using the kevlar shears.

Source: https://assist.dla.mil -- Downloaded: 2016-12-10T08:03Z
Check the source to verify that this is the current version before use.

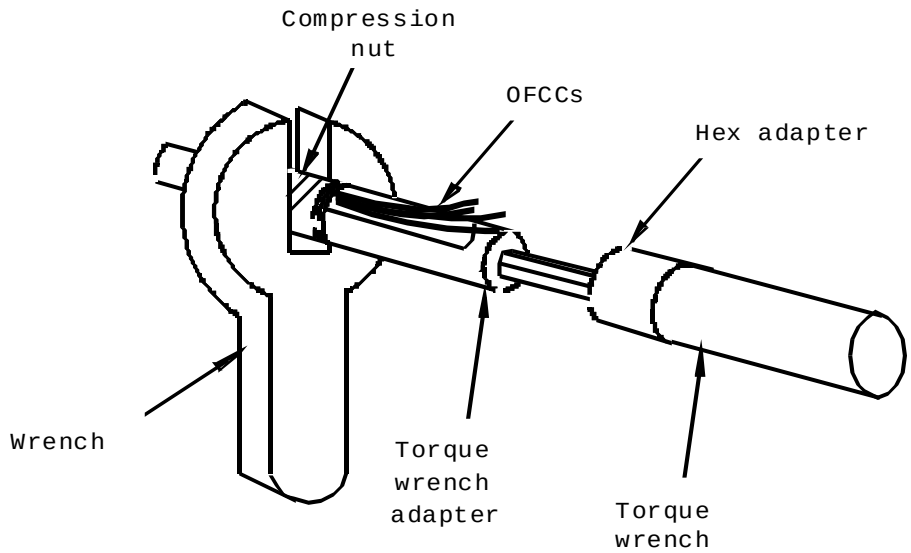

FIGURE 5A1-31. Tightening the kevlar compression nut.

NOTE: The following steps may be performed at this time or later in the connector assembly process before final assembly of the backshell (see 3.3.10).

Step 13 - Slide the 50 mm length (2 in) length of outer heat shrink tubing over the knurled end of the strain relief housing up to the shoulder.

CAUTION: Do not overheat the cable. Prolonged exposure of the jacket to temperatures above 160°C (320°F) may damage the cable jacket. Discontinue heating of the tubing and allow the cable jacket to cool before reheating if the cable jacket shows any signs of bubbling or necking.

Starting at the strain relief housing, hold the heat gun approximately 100 mm (4 in) from the tubing and apply heat until the tubing shrinks to a tight fit and sealant is visible at the ends.

NOTE: Ensure that the heat shrink is properly sealed to the cable and connector. The heat shrink on the connector is an integral part of the BOF tube system watertight integrity.

Step 14 - For tubes containing BOF bundles only:

a. Using the bundle jacket stripper, remove the exposed bundle jacket in approximately 160 mm (6 in) lengths until all of the exposed bundle jacket is removed.

NOTE: Once a short length of the bundle jacket has been removed, the remaining length can normally be torn off of the bundle by hand.

b. Using the clear jacket stripper, remove approximately 80 mm (3.0 in) of the clear inner jacket from the end of each 6-fiber subunit.

Source: https://assist.dla.mil -- Downloaded: 2016-12-10T08:03Z
Check the source to verify that this is the current version before use.

NOTE: If clear jacket stripper does not bite into the clear inner jacket, position the clear jacket stripper at a 30 to 40 degree angle to increase its bite.

c. Find the ripcord from among the six fibers of each subunit. Ensure that it is not crossed with any of the fibers. While holding the group of fibers in one hand, pull the ripcord along the bundle with the other hand. Pull the ripcord until it reaches the beginning of the bundle jacket.

NOTE: The ripcord and fibers spiral along the bundle length. Take care to follow the spiral when pulling the ripcord.

d. Starting at the end of the fiber bundle subunit, carefully pull the group of fibers from each clear inner jacket.

e. Using the scissors, carefully cut away the ripcord and each clear inner jacket.

3.3.5 Fiber preparation.

Step 1 - Feed each OFCC into a crimp sleeve and slide the sleeve back from the end of the OFCC. (NOTE: Only use crimp sleeves intended for termini. Do not use crimp sleeves intended for other types of connectors. The standard crimp sleeve for the terminus may be oriented in either direction.)

NOTE: For termination of fiber with only a coating/buffer, a crimp sleeve is not utilized. Feed each fiber into a 6 mm (0.25 in) length of 3 mm (0.12 in) heat shrink tubing.

Step 2 - Trim the OFCCs to the length (A + B + C) shown in table 5A1-IV using the kevlar shears (see figure 5A1-32).

NOTE: For fiber with only a coating/buffer, A + B should be used for the coated/buffered fiber length.

NOTE: For the shell size 23 optional strain relief assembly procedure (see 3.3.3.2), the cable strip length (dimension A) used in the fiber preparation process should be increased by 163 mm (6.4 in) due to the increased length of cable jacket removed in the procedure.

NOTE: The tolerance on dimensions A and B is +/- 1 mm (+/- 0.04 in).

NOTE: Shorter values for dimension C may be used.

Source: https://assist.dla.mil -- Downloaded: 2016-12-10T08:03Z
Check the source to verify that this is the current version before use.

TABLE 5A1-IV. Cable stripping dimensions.

Connector shell size	Backshell Configuration	Dimensions mm (in)		
		A	B	C
13	Straight	67 (2.64)	10 (0.39)	22 (0.87)
	45°	85 (3.35)	10 (0.39)	22 (0.87)
	90°	85 (3.35)	10 (0.39)	22 (0.87)
15	Straight	67 (2.64)	10 (0.39)	22 (0.87)
	45°	105 (4.13)	10 (0.39)	22 (0.87)
	90°	105 (4.13)	10 (0.39)	22 (0.87)
23	Straight	70 (2.75)	10 (0.39)	22 (0.87)
	45°	108 (4.25)	10 (0.39)	22 (0.87)
	90°	108 (4.25)	10 (0.39)	22 (0.87)

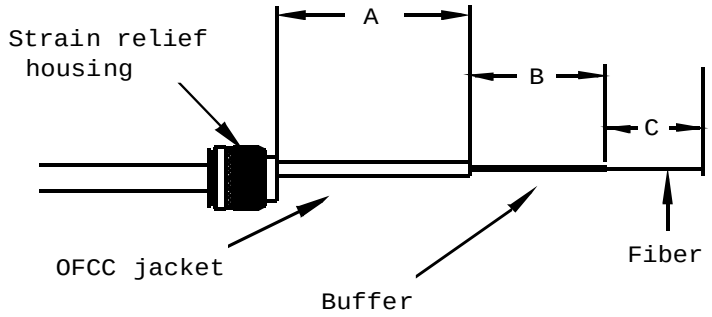

FIGURE 5A1-32. Cable stripping dimensions.

NOTE: The definition of dimensions A and B has been changed from the definition used in MIL-STD-2042A.

Source: https://assist.dla.mil -- Downloaded: 2016-12-10T08:03Z
Check the source to verify that this is the current version before use.

Step 3 - Remove the OFCC jackets back to the dimension (B + C) shown in table 5A1-IV using the OFCC stripper and trim the OFCC kevlar so that approximately 3 mm (0.12 in) extends past the OFCC jacket (see figure 5A1-32).

NOTE: The optimum way to remove the OFCC jackets is to ring cut the jacket with the OFCC stripper and pull the jacket off by hand. Pushing off the OFCC jacket with a tightly held OFCC stripper can lead to fiber breakage.

NOTE: This step does not apply when terminating fiber with only a coating/buffer.

Step 4 - WARNING: Wear safety glasses when removing the fiber buffer and coating to avoid possible eye injury.

Remove the fiber buffers and coatings back to the dimension (C) shown in table 5A1-IV using the buffer stripper (see figure 5A1-32). Remove the buffer and coating in small sections (approximately 6 mm (0.25 in) at a time). (NOTE: Normally, the buffer and coating are tightly adhered to one another and come off of the fiber at the same time.)

Step 5 - CAUTION: The uncoated fiber is in its most vulnerable state. Take extreme care not to damage the fiber. Breakage of any one fiber from this point until the connector is completely assembled will require repetition of this and the following steps in order to maintain approximately equal length of all the fibers in the cable.

Remove any residual coating material from the bare fibers with a wipe dampened with alcohol. Wipe only once from the end of the buffer towards the end of the fiber. (NOTE: Do not repeatedly wipe the bare fiber, as this will weaken the fiber.)

3.3.5 Installation of termini onto fibers.

NOTE: This procedure describes the process for installing ceramic termini onto either multimode or single-mode fibers. The termini use epoxy to secure the fiber and a crimp sleeve to capture the kevlar strength members of the OFCCs.

Step 1 - Turn on the curing oven so that it attains the proper temperature before the termini are placed within it (approximately 20 minutes).

Step 2 - Inspect the terminus and verify that the ferrule hole is free and clean of dirt. This can be accomplished by holding the front of the terminus up to a light and verifying that the light is visible from the rear of the terminus. If light cannot be seen through the terminus, push music wire through the terminus hole to clear it. Then blow dry air through the hole to remove any debris.

Step 3 - Remove the divider from a 2-part epoxy package and mix the two parts together until the epoxy is a smooth uniform color (see figure 5A1-33). The epoxy can be mixed by either repeatedly rolling or gently sliding the divider over the package.

NOTE: Alternatively, the epoxy may be mixed by massaging the epoxy package by hand.

Source: https://assist.dla.mil -- Downloaded: 2016-12-10T08:03Z
Check the source to verify that this is the current version before use.

CAUTION: Do not introduce large air bubbles into the epoxy during the mixing process. Large air bubbles in the epoxy can lead to connector failure during temperature extremes.

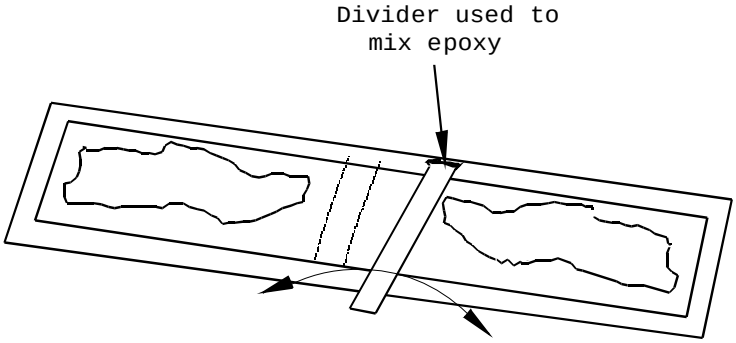

FIGURE 5A1-33. Mixing the epoxy.

Step 4 - Install the syringe tip on the syringe, remove the plunger, and squeeze the epoxy into the syringe. Replace the plunger.

Step 5 - WARNING: Wear safety glasses while dispensing the epoxy to avoid possible eye injury.

Remove air pockets in the syringe by holding the tip of the syringe upward and dispensing epoxy onto a wipe until it runs free and clear.

Step 6 - Slide the terminus, rear first, onto the syringe tip (see figure 5A1-34). Keeping the syringe vertical, depress the plunger and slowly inject epoxy into the terminus until it escapes out of the ferrule, forming a very small bead. (NOTE: Do not overfill. Be extremely careful not to get epoxy on the pin spring or other terminus moving parts.)

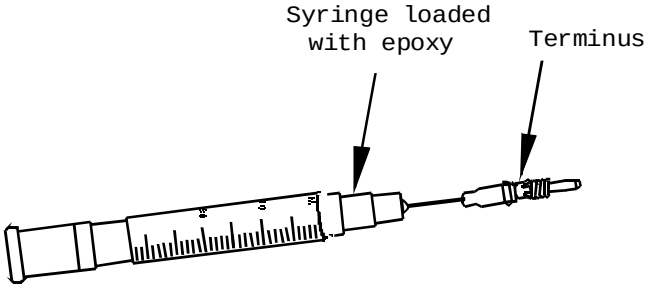

FIGURE 5A1-34. Injecting epoxy into the terminus.

Step 7 - Withdraw the syringe from the terminus. Maintain some pressure on the plunger as the syringe is withdrawn so that the terminus is completely filled with epoxy. Using a wipe dampened with alcohol, wipe away any epoxy on the outer diameter of ferrule without disturbing the epoxy bead.

Source: https://assist.dla.mil -- Downloaded: 2016-12-10T08:03Z
Check the source to verify that this is the current version before use.

NOTE: Alternatively, the terminus may be completely filled by maintaining a light pressure on the syringe plunger and allowing the epoxy to push the terminus off of the syringe tip.

NOTE: At this point, the terminus may be inserted into the cure adapter. Refer to Step 13 for insertion of the terminus into the cure adapter.

Step 8 - For termination of OFCC's only: Feather the kevlar evenly around the fiber and insert the fiber into the rear of the terminus (see figure 5A1-35). Gently work the fiber through the terminus until the buffer seats against the rear of the ferrule. (The terminus should be rotated around the fiber as the fiber is inserted.) The OFCC jacket should come up to the rear of the terminus and the kevlar should surround the rear of the terminus. Do not allow kevlar to enter the rear of the terminus. Once inserted, do not allow the fiber to slip back.

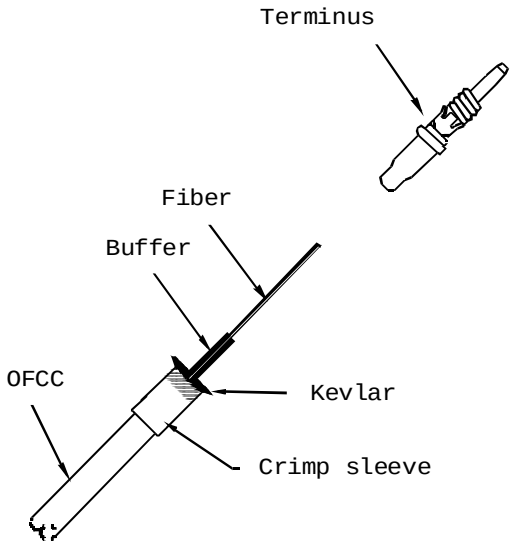

FIGURE 5A1-35. Inserting the fiber into the terminus.

Step 9 - For termination of fiber with only a coating/buffer: Gently work the fiber through the terminus until the buffer seats against the rear of the ferrule. (The terminus should be rotated around the fiber as the fiber is inserted.) Once inserted, do not allow the fiber to slip back.

Step 10 - For termination of OFCC's only: Slide the crimp sleeve over the kevlar and crimp it to the rear of the terminus using the crimp tool. (NOTE: A small amount of epoxy may be added on the kevlar near the rear of the terminus before the crimp sleeve is installed. However, no epoxy should be visible once the crimp sleeve is installed.)

NOTE: If small wings are visible on the sides of the crimp sleeve after crimping, rotate the terminus 60° in the crimp tool and crimp the terminus a second time.

Source: https://assist.dla.mil -- Downloaded: 2016-12-10T08:03Z
Check the source to verify that this is the current version before use.

Step 11 -For termination of fiber with only a coating/buffer: Work a small bead of sealant tape around the fiber at the rear of the terminus. Slide the heat shrink tube over the sealant tape and the rear of the terminus.

CAUTION: Do not overheat the coated/buffered optical fiber. Discontinue heating of the tubing and allow the fiber to cool before reheating if the fiber shows any signs of discoloration or bubbling.

Shrink the heat shrink tube loosely down over the terminus and optical fiber.

NOTE: Do not apply heat to the shink after initial shrinking. The heat shrink does not have to shrink down snugly on the optical fiber.

Step 12 -For termination of OFCC's only: Verify that the kevlar does not protrude excessively from under the crimp sleeve. Excessive kevlar protrusion will cause the terminus to not seat properly in the finished connector. If excessive kevlar protrudes from under the crimp sleeve, trim it back using a razor blade.

NOTE: If the terminus was inserted into the cure adapter in Step 7, then Steps 13, 14 and 15 may be omitted.

Step 13 -Verify that there is a small amount of epoxy around the fiber where it protrudes from the ferrule. If it is found that there is no small bead of epoxy on the terminus tip, carefully add a small amount of epoxy around the fiber. (NOTE: There should only be a small amount of epoxy around the fiber to support it later during the polishing process. If too much epoxy is around the fiber during the curing process it may cause the fiber to crack.)

Step 14 -Using a wipe dampened with alcohol, carefully wipe away any excess epoxy on the fiber that is more than 2 mm (0.1 in) from the ferrule tip surface.

Step 15 -Insert the terminus into the cure adapter until it snaps into place (see figure 5A1-36.)

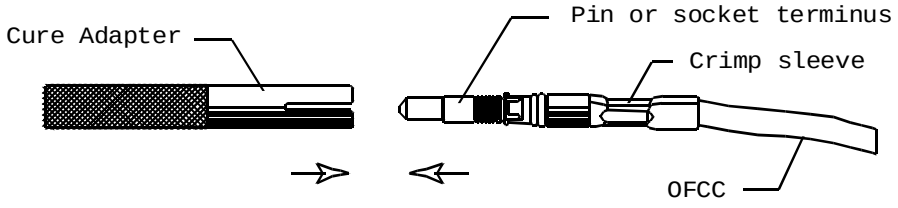

FIGURE 5A1-36. Inserting a terminus into a cure adapter.

Step 14 -Repeat steps 2 through 13 for each fiber to be terminated.

Step 15 -Place the cure adapters in the curing oven, and position the cable vertically over the oven using the cable stand, cable stand ring and cable clip (see figure 5A1-37). Cure the epoxy for a minimum of 10 minutes (maximum of 30 minutes) at 120°C (248°F). (NOTE: When the cable is positioned above the terminus, make sure that no bends are placed in the OFCCs or fiber. Each OFCC or fiber should enter the terminus parallel to the terminus.)

Source: https://assist.dla.mil -- Downloaded: 2016-12-10T08:03Z
Check the source to verify that this is the current version before use.

NOTE: Alternate cure schedules may be used with approval of the Naval Surface Warfare Center (see 1.1.1).

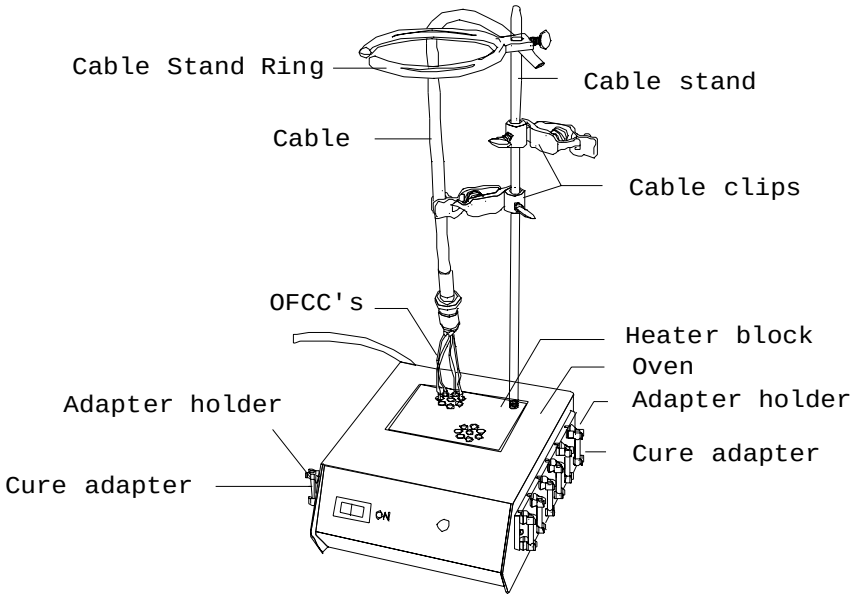

FIGURE 5A1-37. Termini in the curing oven.

Step 16 - Turn the curing oven off and remove the cure adapters and termini from the curing oven. Allow the cure adapters and termini to cool for approximately 4 minutes.

3.3.6 Polishing the fiber ends.

3.3.6.1 Flat end polish. This procedure will produce a terminus with a flat end polish. This procedure is applicable only for multimode applications. Procedures for hand polishing are contained herein. Machine polishing may be used as an alternate method, provided the following requirements are satisfied:

a. The manufacturer's instructions will be rigidly adhered to, except that the polishing papers or disks shall be 5 um aluminum oxide foam backed, 1 um aluminum oxide mylar backed, and 0.1 um diamond mylar backed as used in hand polishing. (NOTE: Alternate polishing materials may be used if authorized approval is obtained and the polishing machine includes the appropriate stops to prevent changes to the ferrule length.)

b. The machine polished terminus shall undergo the same quality check used for the manually polished terminus as described herein.

NOTE: The procedures contained herein should produce an optical terminus with a physical contact (PC) polish.

Step 1 - WARNING: Wear safety glasses when scoring the fiber to avoid possible eye injury.

Remove the terminus from the cure adapter and score the fiber close to the terminus tip at the epoxy interface using one short light stroke with cleaving tool (see figure 5A1-38). (NOTE: Do not break the fibers

Source: https://assist.dla.mil -- Downloaded: 2016-12-10T08:03Z
Check the source to verify that this is the current version before use.

with the cleaving tool.) Pull off each fiber with a gentle, straight pull. Deposit the waste fiber in a trash container.

NOTE: The termini not being polished should be left in the cure adapters during the polishing process to protect the fibers from breakage.

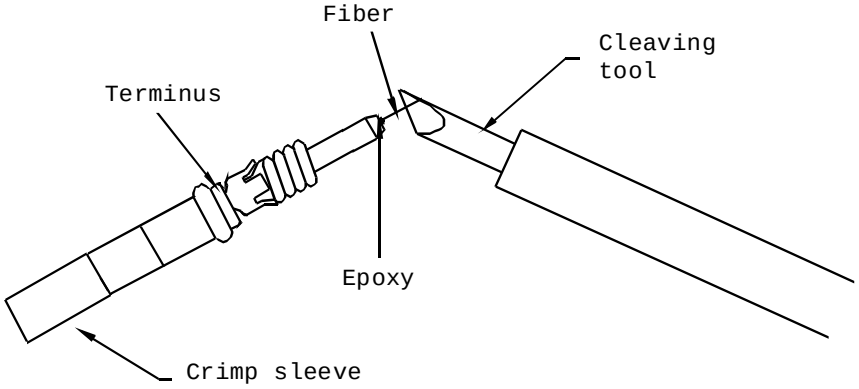

FIGURE 5A1-38. Scoring the fiber.

NOTE: Before inserting the terminus into the polishing tool, the terminus may be held vertically and the end of the fiber polished off by lightly running the 5 um polishing paper over the top of the terminus tip. (This is referred to as air polishing the terminus.)

Step 2 - Rotate the top half of the polishing tool 90 degrees counterclockwise and separate the top from the base.

Step 3 - Place the end of the terminus insertion tool at the rear of the crimp sleeve with the OFCC laid in the tool channel (see figure 5A1-39).

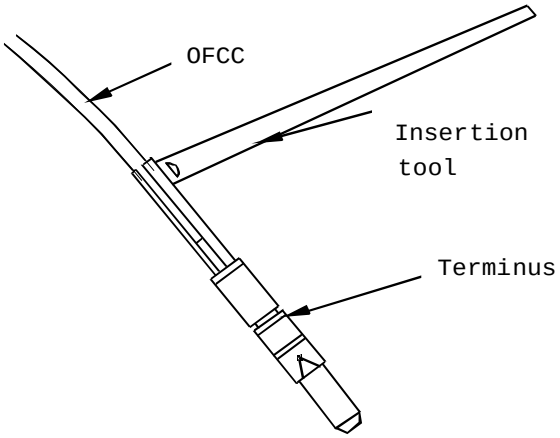

FIGURE 5A1-39. Placing the terminus in the insertion tool.

Step 4 - Insert the terminus into the center of the polishing tool top. Apply pressure with the insertion tool until the terminus snaps into place. Remove the tool by pulling straight back (see figure 5A1-40). (NOTE:

Source: https://assist.dla.mil -- Downloaded: 2016-12-10T08:03Z
Check the source to verify that this is the current version before use.

Difficulty in inserting the terminus into the polishing tool may indicate epoxy on the outside of the terminus that must be removed before proceeding.)

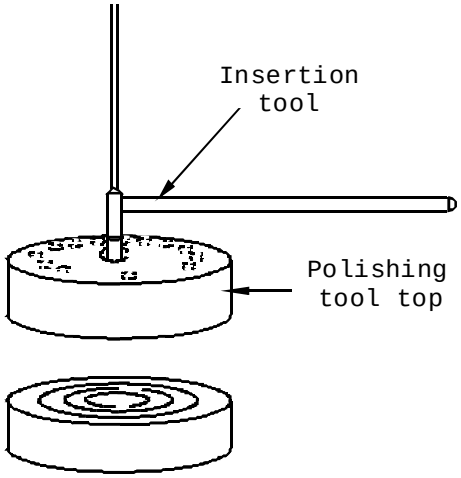

FIGURE 5A1-40. Inserting the terminus in the polishing tool.

Step 5 - Install the top half of the polishing tool on the bottom half and rotate it clockwise (90°) until it locks in place.

Step 6 - Clean the glass polishing plate, the backs of the polishing papers, and the surface of the polishing tool using a wipe dampened with alcohol. Blow all of the surfaces dry with air.

Step 7 - Place the 5 um polishing paper on the glass plate and start polishing the terminus with very light pressure (the weight of the tool) using a figure-8 motion. Do not overpolish the terminus. (NOTE: The first polish is complete when all of the epoxy is almost gone from the tip of the terminus.) Since the polishing time varies with the amount of epoxy present on the tip of the terminus, inspect the terminus tip frequently. Whenever the polishing tool is lifted, remove the grit from the tool and the terminus with a wipe dampened with alcohol or with air. When polishing is complete, clean the terminus and the polishing tool using a wipe dampened with alcohol and blow them dry with air. Perform a rough inspection of the ferrule end using the eye loop.

Step 8 - Replace the 5 um paper with the 1 um paper. Polish the terminus with very light pressure using a figure-8 motion for approximately 10 to 20 complete motions.

NOTE: The 1 um polish is complete when all of the epoxy is gone from the tip of the terminus.

NOTE: The 1 um polish may also be performed using wet paper.

Step 9 - Replace the 1 um paper with the 0.1 um paper. Wet the paper and polish the terminus with very light pressure using a figure-8 motion for approximately 10 to 20 complete motions.

NOTE: The final polish may also be performed using dry paper.

Source: https://assist.dla.mil -- Downloaded: 2016-12-10T08:03Z
Check the source to verify that this is the current version before use.

Step 10 -Rotate the top of the polishing tool counterclockwise (90°) and separate the top from the base. Insert the terminus removal tool into the bottom of the terminus cavity of the polishing tool top and press on the hilt of the removal tool until the tool clicks into place (see figure 5A1-41). (NOTE: Make sure that the removal tool is clean before inserting the tool into the terminus cavity.) Depress the plunger and slide the terminus out of the polishing tool. Clean the terminus and the polishing tool with a wipe dampened with alcohol and blow them dry with air.

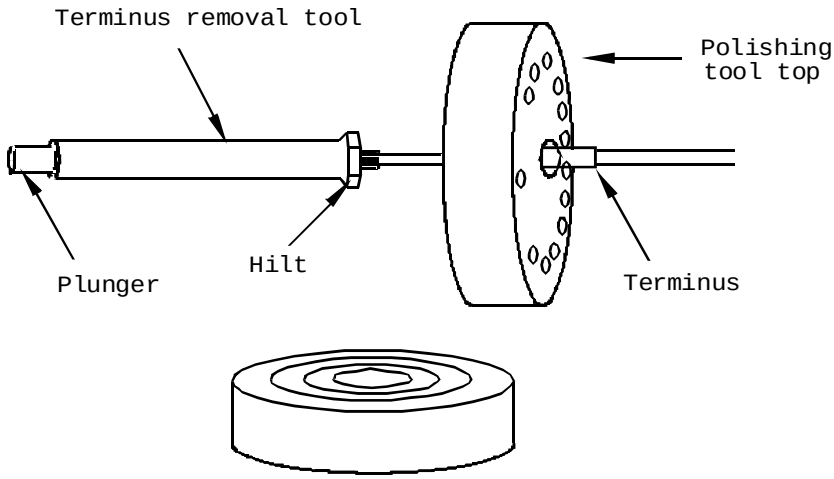

FIGURE 5A1-41. Removing the terminus from the polishing tool.

Step 11 -Repeat steps 1 through 10 for all of the termini.

3.3.6.2 Domed end polish.

3.3.6.2.1 Standard procedure. This procedure will produce a terminus with a domed end polish. This procedure is recommended for high quality multimode applications and single mode applications with a minimum return loss requirement of 30 db. Procedures for hand polishing are contained herein. Machine polishing may be used as an alternate method, provided the following requirements are satisfied:

a. The manufacturer's instructions will be rigidly adhered to, except that the polishing papers or disks shall be 5 um aluminum oxide foam backed, 1 um aluminum oxide mylar backed, and 0.1 um diamond mylar backed as used in hand polishing. (NOTE: Alternate polishing materials may be used if authorized approval is obtained and the polishing machine includes the appropriate stops to prevent changes to the ferrule length.)

b. The machine polished terminus shall undergo the same quality check used for the manually polished terminus as described herein.

NOTE: The procedures contained herein should produce an optical terminus with a physical contact (PC) polish.

Step 1 - WARNING: Wear safety glasses when scoring the fiber to avoid possible eye injury.

Source: https://assist.dla.mil -- Downloaded: 2016-12-10T08:03Z
Check the source to verify that this is the current version before use.

Remove the terminus from the cure adapter and score the fiber close to the terminus tip at the epoxy interface using one short light stroke with cleaving tool (see figure 5A1-42). (NOTE: Do not break the fibers with the cleaving tool.) Pull off each fiber with a gentle, straight pull. Deposit the waste fiber in a trash container.

NOTE: The termini not being polished should be left in the cure adapters during the polishing process to protect the fibers from breakage.

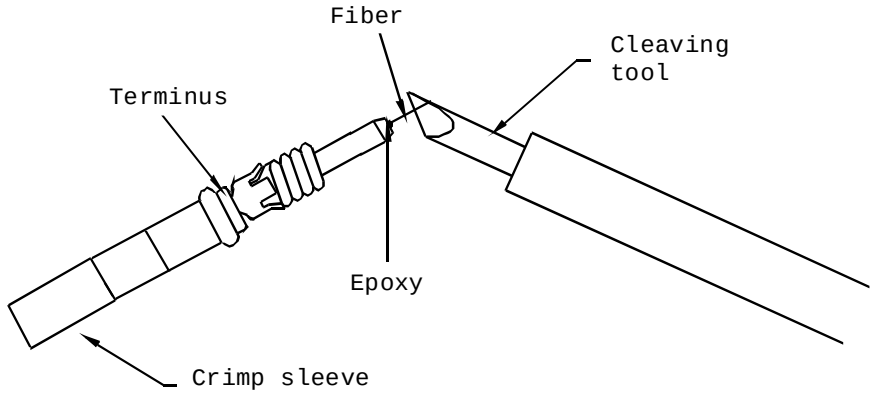

FIGURE 5A1-42. Scoring the fiber.

NOTE: Before inserting the terminus into the polishing tool, the terminus may be held vertically and the end of the fiber polished off by lightly running the 5 um polishing paper over the top of the terminus tip. (This is referred to as air polishing the terminus.)

Step 2 - Rotate the top half of the polishing tool 90° counterclockwise and separate the top from the base.

Step 3 - Place the end of the terminus insertion tool at the rear of the crimp sleeve with the OFCC laid in the tool channel (see figure 5A1-43).

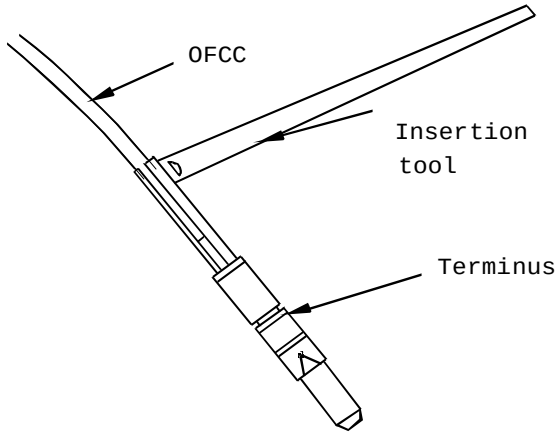

FIGURE 5A1-43. Placing the terminus in the insertion tool.

Source: https://assist.dla.mil -- Downloaded: 2016-12-10T08:03Z
Check the source to verify that this is the current version before use.

Step 4 - Insert the terminus into the center of the polishing tool top. Apply pressure with the insertion tool until the terminus snaps into place. Remove the tool by pulling straight back (see figure 5A1-44). (NOTE: Difficulty in inserting the terminus into the polishing tool may indicate epoxy on outside of the terminus that must be removed before proceeding.)

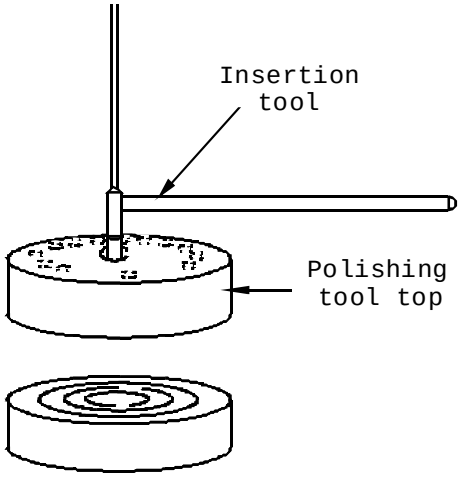

FIGURE 5A1-44. Inserting the terminus into the polishing tool.

Step 5 - Install the top half of the polishing tool on the bottom half and rotate it clockwise (90°) until it locks in place.

Step 6 - Clean the glass polishing plate, the resilient pad, the backs of the polishing papers, and the surface of the polishing tool using a wipe dampened with alcohol. Blow all of the surfaces dry with air.

Step 7 - Place the 5 um polishing paper on the glass plate and start polishing the terminus with very light pressure (the weight of the tool) using a figure-8 motion. Do not overpolish the terminus. (NOTE: The first polish is complete when almost all of the epoxy is almost gone from the tip of the terminus.) Since the polishing time varies with the amount of epoxy present on the tip of the terminus, inspect the terminus tip frequently. Whenever the polishing tool is lifted, remove the grit from the tool and the terminus with a wipe dampened with alcohol or with air. When polishing is complete, clean the terminus and the polishing tool using a wipe dampened with alcohol and blow them dry with air. Perform a rough inspection of the ferrule end using the eye loop.

Step 8 - Place the resilient pad on top of the glass plate. Place the 1 um paper on the resilient pad. Wet the paper and polish the terminus with no pressure using a figure-8 motion for approximately 10 complete motions.

NOTE: The polish tool should hydroplane above the paper surface during this polish.

NOTE: The 1 um polish is complete when all of the epoxy is gone from the tip of the terminus.

Source: https://assist.dla.mil -- Downloaded: 2016-12-10T08:03Z
Check the source to verify that this is the current version before use.

NOTE: The 1 um polish may also be performed using dry paper.

Step 9 - Replace the 1 um paper with the 0.1 um paper. Wet the paper and polish the terminus with no pressure using a figure-8 motion for approximately 20 to 30 complete motions.

NOTE: The polish tool should hydroplane above the paper surface during this polish.

Step 10 - Rotate the top of the polishing tool counterclockwise (90°) and separate the top from the base. Insert the terminus removal tool into the bottom of the terminus cavity of the polishing tool top and press on the hilt of the removal tool until the tool clicks into place (see figure 5A1-45). (NOTE: Make sure that the removal tool is clean before inserting the tool into the terminus cavity.) Depress the plunger and slide the terminus out of the polishing tool. Clean the terminus and the polishing tool with a wipe dampened with alcohol and blow them dry with air.

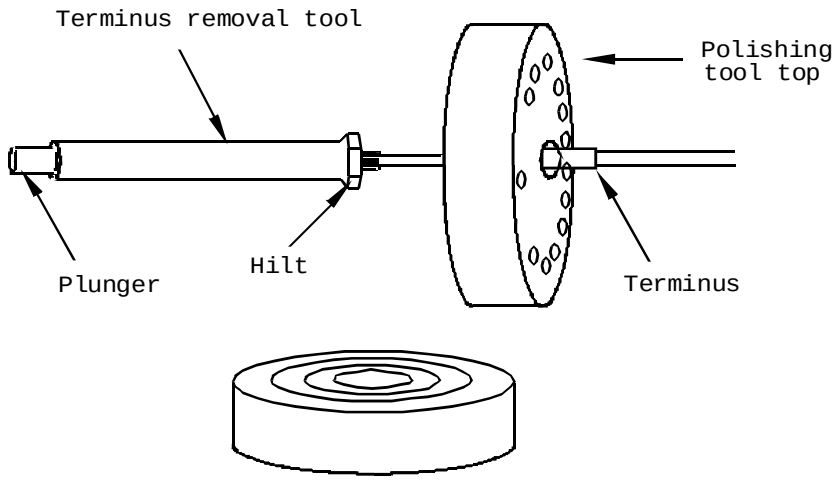

FIGURE 5A1-45. Removing the terminus from the polishing tool.

Step 11 - Repeat steps 1 through 10 for all of the termini.

3.3.6.2.2 Enhanced procedure. This procedure will produce a terminus with a domed end polish. This procedure is typically used for single mode applications with a minimum return loss requirement of 40 db, or when specified in the contract. Procedures for hand polishing are contained herein. Machine polishing may be used as an alternate method, provided the following requirements are satisfied:

a. The manufacturer's instructions will be rigidly adhered to, except that the polishing papers or disks shall be 5 um aluminum oxide foam backed, 1 um aluminum oxide mylar backed, 0.1 um diamond mylar backed, and ultrafine mylar backed as used in hand polishing. (NOTE: Alternate polishing materials may be used if authorized approval is obtained and the polishing machine includes the appropriate stops to prevent changes to the ferrule length.)

b. The machine polished terminus shall undergo the same quality check used for the manually polished terminus as described herein.

Source: https://assist.dla.mil -- Downloaded: 2016-12-10T08:03Z
Check the source to verify that this is the current version before use.

NOTE: The procedures contained herein should produce an optical terminus with a physical contact (PC) polish.

Step 1 - Perform steps 1 through 9 of the standard polish procedure.

Step 2 - Replace the 0.1 um paper with the ultrafine paper. Wet the paper and polish the terminus with light pressure using a figure-8 motion for 10 to 30 complete motions.

NOTE: The glossy side of the ultrafine paper should be placed facing the resilient pad.

NOTE: The polish tool should hydroplane above the paper surface during this polish.

Step 3 - Rotate the top of the polishing tool counterclockwise (90°) and separate the top from the base. Insert the terminus removal tool into the bottom of the terminus cavity of the polishing tool top and press on the hilt of the removal tool until the tool clicks into place (see figure 5A1-46). (NOTE: Make sure that the removal tool is clean before inserting the tool into the terminus cavity.) Depress the plunger and slide the terminus out of the polishing tool. Clean the terminus and the polishing tool with a wipe dampened with alcohol and blow them dry with air.

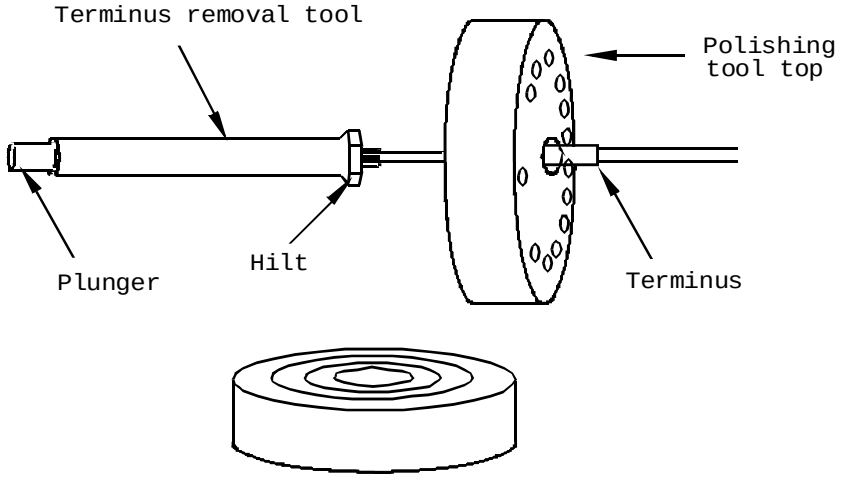

FIGURE 5A1-46. Removing the terminus from the polishing tool.

Step 4 - Repeat steps 1 through 3 for all of the termini.

3.3.7 Quality check.

Step 1 - Examine the terminus with the optical microscope to ensure that the optical surface is smooth and free of scratches, pits, chips, and fractures (see figure 5A1-47). If any defects are present, repeat the polish with the 0.1 um paper (and the ultrafine paper for enhanced polish termini) or reterminate the fiber. (NOTE: Do not polish the terminus more than necessary to pass the quality check.) A high intensity back light may be used to illuminate the fiber during the quality check.

Source: https://assist.dla.mil -- Downloaded: 2016-12-10T08:03Z
Check the source to verify that this is the current version before use.

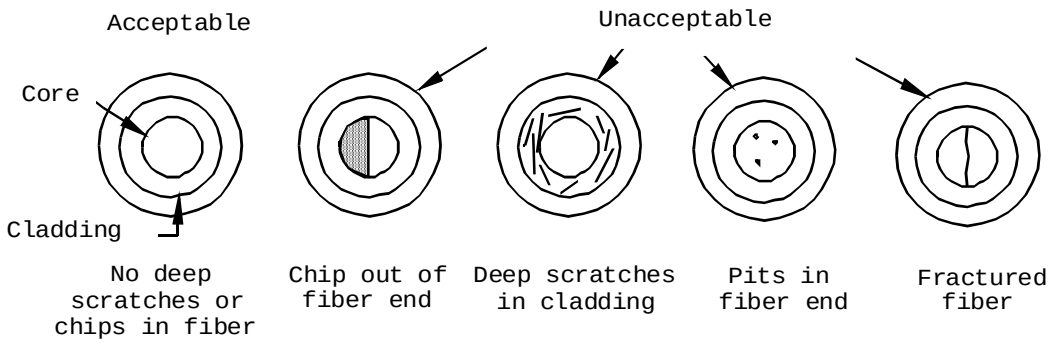

FIGURE 5A1-47. Quality check.

NOTE: Depending on the optical microscope used, viewing quality may be different.

NOTE: A small number of very light scratches (e.g. scratches that can barely be seen) is minimally acceptable.

3.3.8 Installation of the terminus into the connector insert.

NOTE: Inspect the connector insert for dirt or other debris before installing termini into the insert. Clean dirty inserts prior to installing termini.

NOTE: Proceed to step 1a for straight (in-line) backshell connectors. Proceed to step 1b for 45° or 90° (angle) backshell connectors.

Step 1a - Fit the spacing shafts of the insert into the notches in the face of the strain relief until they snap into place (see figure 5A1-48). Proceed to step 2.

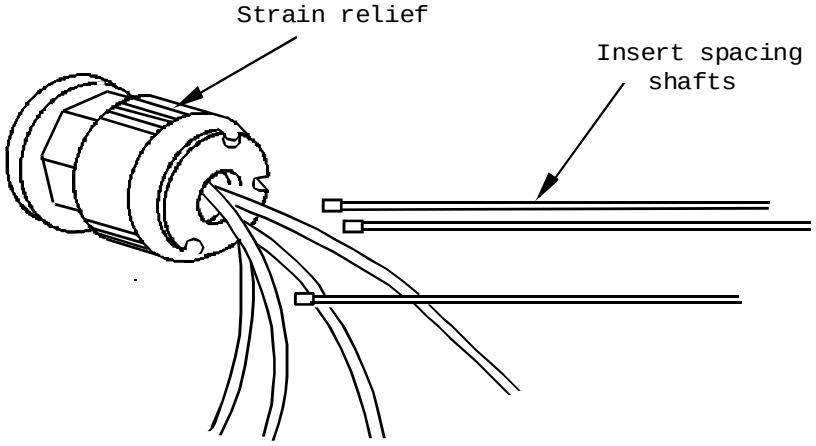

FIGURE 5A1-48. Installing the spacing shafts.

Step 1b - Slide the strain relief/cable assembly into the backshell. When the strain relief assembly stops, rotate the backshell until the strain relief assembly aligns with the backshell. When they are aligned, fully seat the strain relief assembly by sliding it the rest of the

Source: https://assist.dla.mil -- Downloaded: 2016-12-10T08:03Z
Check the source to verify that this is the current version before use.

way into the backshell. (NOTE: A properly seated strain relief assembly should be recessed approximately 10 mm (.4 in) from the rear of the backshell.) Proceed to step 2.

Step 2 - Place the end of the terminus insertion tool at the rear of the crimp sleeve with the OFCC laid in the tool channel (see figure 5A1-43).

Step 3 - Place the terminus in the proper cavity in the rear of the connector insert. Apply pressure with the insertion tool until the terminus snaps into place (see figure 5A1-49). Remove the tool by pulling straight back. (NOTE: A properly inserted terminus will have some axial "play" within the insert cavity.)

NOTE: A socket terminus, unlike a pin terminus, will require installation of the alignment sleeve after seating the terminus. Proceed to step 4 below for socket termini. For pin termini repeat steps 2 and 3 for the rest of the termini.

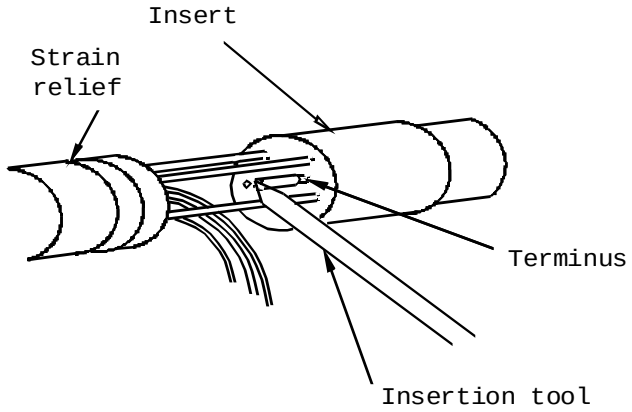

FIGURE 5A1-49. Installing the terminus in the insert.

Step 4 - Place the end of the socket terminus alignment sleeve installation and removal tool into the solid end of the alignment sleeve, depress the plunger to grasp the alignment sleeve, and place the sleeve into the socket terminus cavity in the face of the insert (see figure 5A1-50). Release the plunger and press until the sleeve snaps onto the groove on the ceramic terminus body.

CAUTION: Do not rotate the tool after the sleeve is installed in the insert.

CAUTION: Do not press the sleeve into place with the plunger depressed. This may cause damage to the inner ceramic tube.

Remove the tool by pulling straight back. Proceed to step 5 below.

Source: https://assist.dla.mil -- Downloaded: 2016-12-10T08:03Z
Check the source to verify that this is the current version before use.

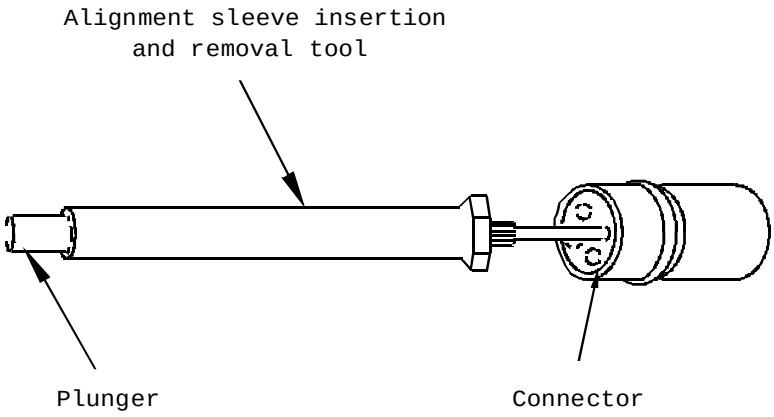

FIGURE 5A1-50. Installing the alignment sleeve.

Step 5 - Repeat steps 1 through 4 for all of the termini.

3.3.9 Removal of the termini from the connector insert.

NOTE: Perform this procedure only if the termini are to be removed from the connector.

NOTE: Proceed to step 1 below for socket termini. Proceed to step 2 below for pin termini.

Step 1 - CAUTION: Do not rotate the tool while the sleeve is in the insert.

Remove the alignment sleeves from the socket termini using the terminus alignment sleeve installation and removal tool by inserting the tool end into the alignment sleeve and depressing the plunger so that the tool grasps the sleeve. Pull the sleeve straight back. Proceed to step 2.

Step 2 - Insert the terminus removal tool into the terminus cavity from the front of the insert and press on the hilt of the tool until it snaps into place (see figure 5A1-51). (NOTE: Make sure that the removal tool is clean before inserting the tool into the terminus cavity.) Depress the plunger to slide the terminus out the rear of the insert.

Source: https://assist.dla.mil -- Downloaded: 2016-12-10T08:03Z
Check the source to verify that this is the current version before use.

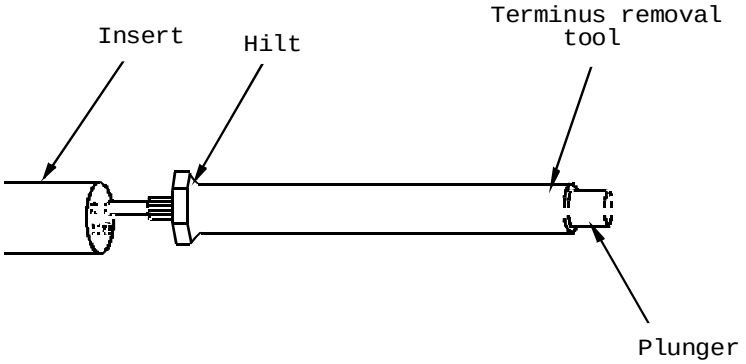

FIGURE 5A1-51. Removing the terminus from the insert.

3.3.10 Assembly of the backshell.

NOTE: If the heat shrink was not applied to the connector strain relief during the initial strain relief assembly, complete steps 11, 12, and 13 of 3.3.3.1 before continuing.

NOTE: 45° and 90° backshells have two available clocking positions and are normally shipped with the backshell clocked at either 0° or 180° referenced to the master key. If other backshell clocking positions are required, the backshell adapter must be decoupled from the connector plug, rotated to the required clocking position, and then re-coupled to the plug. Thread locking compound is used on the plug and backshell adapter threads and must be replaced when re-coupling the backshell adapter to the plug at a torque of 8.6 Nm (75 in-lbs).

3.3.10.1 Straight backshells.

Step 1 - Slide the insert/strain relief/cable assembly into the backshell (see figure 5A1-52). When the insert stops, rotate the backshell until the key on the insert aligns with the keyway in the backshell. When they are aligned, fully seat the insert by sliding the insert/strain relief/cable assembly the rest of the way into the backshell. (NOTE: A properly seated insert should cause the strain relief assembly to be recessed approximately 10 mm (.4 in) from the rear of the backshell.)

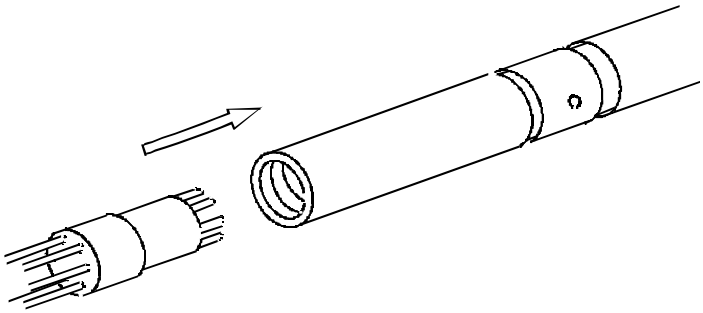

FIGURE 5A1-52. Assembling the backshell.

Source: https://assist.dla.mil -- Downloaded: 2016-12-10T08:03Z
Check the source to verify that this is the current version before use.

Step 2 - CAUTION: Make sure that the insert key is properly aligned in the connector shell keyway and the insert fully seated in the connector shell before threading the compression nut into the backshell. Failure to properly seat the insert in the connector shell will cause breakage of the spacer shafts when the compression nut is threaded into the connector shell.

Slide the compression nut up to the backshell, thread it into the backshell and tighten it using the spanner wrench, torque wrench and backshell grip to 6.6 N·m (60 inch-pounds). Use care to not nick or scratch the backshell coating during assembly.

NOTE: For assembly of backshells for BOF tube cables, ensure that the backshell is properly mated and tightened. The backshell and connector is an integral part of the BOF tube system watertight integrity.

NOTE: For shell size 23 backshells, use the strap wrench, torque wrench, and backshell grip to tighten the compression nut to the backshell.

Step 3 - Install the plastic protective cap over the front of the connector.

3.3.10.2 45° and 90° (angle) backshells.

Step 1 - CAUTION: Make sure that the OFCCs will not be pinched between the two backshell halves before assembling the backshell halves.

Assemble the two backshell halves together using a screwdriver.

Step 2 - Slide the compression nut up to the backshell, thread it into the backshell and tighten it using the spanner wrench, torque wrench and backshell grip to 6.6 N·m (60 inch-pounds). Use care to not nick or scratch the backshell coating during assembly.

NOTE: For assembly of backshells for BOF tube cables, ensure that the backshell is properly mated and tightened. The backshell and connector is an integral part of the BOF tube system watertight integrity.

NOTE: For shell size 23 backshells, use the strap wrench, torque wrench, and backshell grip to tighten the compression nut to the backshell.

Step 3 - Install the plastic protective cap over the front of the connector.

Source: https://assist.dla.mil -- Downloaded: 2016-12-10T08:03Z
Check the source to verify that this is the current version before use.

3.4 Procedure III. Method 5A1-3 Installation of connectors with insert retention nuts. This method shall be used to assemble connectors with part numbers M28876/1 and M28876/11 configured with insert retention nuts onto OFCCs.

NOTE: This procedure is applicable in the installation of connector receptacles into equipment where the termination is accomplished on OFCCs. This procedure is not appropriate for the installation of plugs or receptacles onto multifiber cables.

3.4.1 Equipment and materials. The equipment and materials in table 5A1-V shall be used to perform this procedure:

TABLE 5A1-V. Equipment and materials.

Description	Quantity
Ruler	1
Wipes (NAVSEA DWG 6872813-22 or equal)	As required
Alcohol bottle with alcohol/2-propanol or equal (sealable type)	1
Canned air or compressed air	As required
OFCC strip tool (NAVSEA DWG 6872813-10 or equal)	1
Kevlar shears (NAVSEA DWG 6872813-16 or equal)	1
Safety glasses	1
Buffer strip tool (NAVSEA DWG 6872813-9 or equal)	1
Cleaning wire (NAVSEA DWG 6872813-32 or equal)	As required
Epoxy (MIL-PRF-24792)	As required
Syringe with dispensing needles (NAVSEA DWG 6872813-27 or equal)	As required
Crimp tool (NAVSEA DWG 6872813-17 or equal)	1
Razor blade	1
Cure adapters (NAVSEA DWG 6872813-19 or equal)	As required
Curing oven (NAVSEA DWG 6872813-19 or equal)	1
Cable stand (NAVSEA DWG 6872813-19 or equal)	1
Cable stand ring (NAVSEA DWG 6872813-19 or equal)	1
Cable clip (NAVSEA DWG 6872813-19 or equal)	1

Source: https://assist.dla.mil -- Downloaded: 2016-12-10T08:03Z
Check the source to verify that this is the current version before use.

TABLE 5A1-V. Equipment and materials – continued.

Description	Quantity
Cleaver (NAVSEA DWG 6872813-7 or equal)	1
Polishing paper (5 um aluminum oxide, foam backed) (NAVSEA DWG 6872813-24 or equal)	As required
Polishing tool ceramic termini (NAVSEA DWG 6872813-18 or equal)	1
Terminus insertion tool (NAVSEA DWG 6872813-2 or equal)	1
Terminus insertion tool 90E (NAVSEA DWG 6872813-15 or equal)	1
Glass polishing plate (NAVSEA DWG 6872813-3 or equal)	1
7X eye loupe	1
Polishing paper (1 um aluminum oxide, mylar backed) (NAVSEA DWG 6872813-23 or equal)	As required
Water bottle (sealable type)	1
Terminus removal tool (NAVSEA DWG 6872813-6 or equal)	1
Optical microscope 400X (NAVSEA DWG 6872813-28 or equal)	1
Alignment sleeve insertion and removal tool (ceramic termini)(NAVSEA DWG 6872813-4 or equal)	1
Protective caps (plastic)	As required
Polishing paper (0.1 um diamond, mylar backed) (NAVSEA DWG 6872813-41 or equal)	As required
Resilient pad (70 to 90 durometer)(NAVSEA DWG 6872813-42 or equal)	1
Polishing paper (ultrafine, mylar backed) (JDS Optics HF5D or equal)	As required

CAUTION: Throughout the termination process, cleanliness is critical to obtaining a high optical quality connector. Make sure that your hands and the work area are as clean as possible to minimize the ingress of dirt into the connector parts.

NOTE: Verify that the epoxy shelf life has not expired. Do not use epoxy with an expiration date that has passed. Epoxy shelf life can be extended if the epoxy is refrigerated. Contact the epoxy vendor or the Naval Surface Warfare Center (see 1.1.1) for additional information.

Source: https://assist.dla.mil -- Downloaded: 2016-12-10T08:03Z
Check the source to verify that this is the current version before use.

3.4.2 Cable and fiber preparation.

Step 1 - Ensure the OFCCs are the correct type as specified on the applicable cable diagram.

Step 2 - Measure the OFCCs to the required length. Then add sufficient slack to allow for at least two terminations [40 mm (1.6 in) of slack should be sufficient for one termination].

Step 3 - Clean the OFCC outer jackets with a wipe dampened with alcohol and blow them dry with air.

NOTE: Keep the OFCCs and connector parts free from oil, dirt and grease throughout the installation procedure. If cleaning is necessary, use a wipe dampened with alcohol and blow the part dry with air.

Step 4 - Feed each OFCC into a crimp sleeve and slide the sleeve back from the end of the OFCC. (NOTE: Only use crimp sleeves intended for termini. Do not use crimp sleeves intended for other types of connectors. The standard crimp sleeve for the terminus may be oriented in either direction.)

Step 5 - Remove the OFCC jackets back 32 mm (1.26 in) from the end of the fiber using the OFCC stripper and trim the OFCC kevlar using the kevlar shears so that approximately 3 mm (0.12 in) extends past the OFCC jacket.

NOTE: The optimum way to remove the OFCC jackets is to ring cut the jacket with the OFCC stripper and pull the jacket off by hand. Pushing off the OFCC jacket with a tightly held OFCC stripper can lead to fiber breakage.

Step 6 - WARNING: Wear safety glasses when removing the fiber buffer and coating to avoid possible eye injury.

Remove the fiber buffers and coatings back 22 mm (0.87 in) from the end of the fiber using the buffer stripper. Remove the buffer and coating in small sections (approximately 6 mm (0.25 in) at a time.) (NOTE: Normally, the buffer and coating are tightly adhered to one another and come off of the fiber at the same time.)

Step 7 - CAUTION: The uncoated fiber is in its most vulnerable state. Take extreme care not to damage the fiber.

Remove any residual coating material from the bare fibers with a wipe dampened with alcohol. Wipe only once from the end of the buffer towards the end of the fiber. (NOTE: Do not repeatedly wipe the bare fiber, as this will weaken the fiber.)

3.4.3 Installation of the termini onto the fibers.

NOTE: This procedure describes the process for installing ceramic termini onto either multimode or single-mode fibers. The termini use epoxy to secure the fiber and a crimp sleeve to capture the kevlar strength members of the OFCCs.

Step 1 - Turn on the curing oven so that it attains the proper temperature before the termini are placed within it (approximately 20 minutes).

Source: https://assist.dla.mil -- Downloaded: 2016-12-10T08:03Z
Check the source to verify that this is the current version before use.

Step 2 - Inspect the terminus and verify that the ferrule hole is free and clean of dirt. This can be accomplished by holding the front of the terminus up to a light and verifying that the light is visible from the rear of the terminus. If light cannot be seen through the terminus, push music wire through the terminus hole to clear it. Then blow dry air through the hole to remove any debris.

Step 3 - Remove the divider from a 2-part epoxy package and mix the two parts together until the epoxy is a smooth uniform color (see figure 5A1-53). The epoxy can be mixed by either repeatedly rolling or gently sliding the divider over the package.

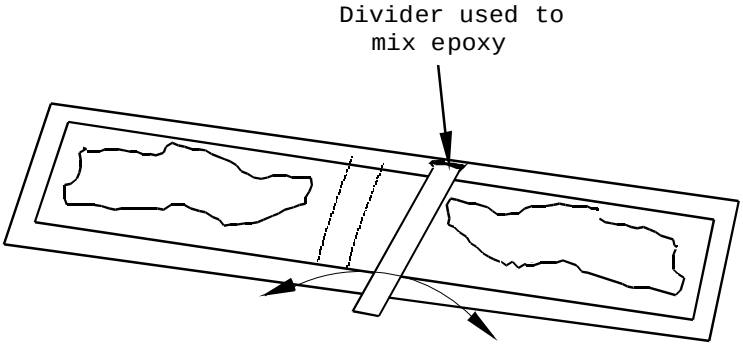

FIGURE 5A1-53. Mixing the epoxy.

NOTE: Alternatively, the epoxy may be mixed by massaging the epoxy package by hand.

CAUTION: Do not introduce large air bubbles into the epoxy during the mixing process. Large air bubbles in the epoxy can lead to connector failure during temperature extremes.

Step 4 - Install the syringe tip on the syringe, remove the plunger, and squeeze the epoxy into the syringe. Replace the plunger.

Step 5 - WARNING: Wear safety glasses while dispensing the epoxy to avoid possible eye injury.

Remove air pockets in the syringe by holding the tip of the syringe upward and dispensing epoxy onto a wipe until it runs free and clear.

Step 6 - Slide the terminus, rear first, onto the syringe tip (see figure 5A1-54). Keeping the syringe vertical, depress the plunger and slowly inject epoxy into the terminus until it escapes out of the ferrule, forming a very small bead. (NOTE: Do not overfill. Be extremely careful not to get epoxy on the pin spring or other terminus moving parts.)

Source: https://assist.dla.mil -- Downloaded: 2016-12-10T08:03Z
Check the source to verify that this is the current version before use.

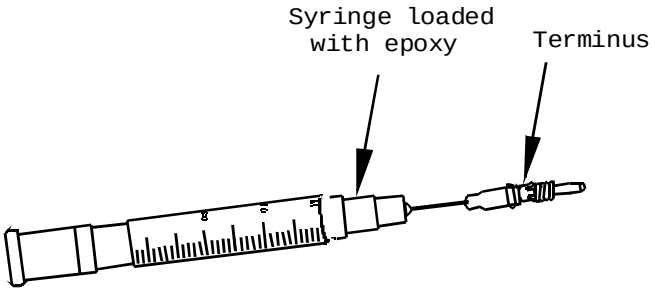

FIGURE 5A1-54. Injecting epoxy into the terminus.

Step 7 - Withdraw the syringe from the terminus. Maintain some pressure on the plunger as the syringe is withdrawn so that the terminus is completely filled with epoxy. Using a wipe dampened with alcohol, wipe away any epoxy on the outer diameter of ferrule without disturbing the epoxy bead.

NOTE: Alternatively, the terminus may be completely filled by maintaining a light pressure on the syringe plunger and allowing the epoxy to push the terminus off of the syringe tip.

NOTE: At this point, the terminus may be inserted into the cure adapter. Refer to Step 13 for insertion of the terminus into the cure adapter.

Step 8 - Feather the kevlar evenly around the fiber and insert the fiber into the rear of the terminus (see figure 5A1-55). Gently work the fiber through the terminus until the buffer seats against the rear of the ferrule. (The terminus should be rotated around the fiber as the fiber is inserted.) The OFCC jacket should come up to the rear of the terminus and the kevlar should surround the rear of the terminus. Do not allow kevlar to enter the rear of the terminus. Once inserted, do not allow the fiber to slip back.

Source: https://assist.dla.mil -- Downloaded: 2016-12-10T08:03Z
Check the source to verify that this is the current version before use.

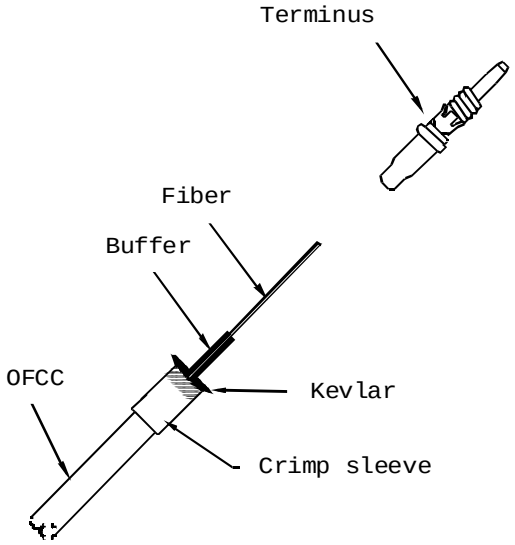

FIGURE 5A1-55. Inserting the fiber into the terminus.

Step 9 - Slide the crimp sleeve over the kevlar and crimp it to the rear of the terminus using the crimp tool. (NOTE: A small amount of epoxy may be added on the kevlar near the rear of the terminus before the crimp sleeve is installed. However, no epoxy should be visible once the crimp sleeve is installed.)

NOTE: If small wings are visible on the sides of the crimp sleeve after crimping, rotate the terminus 60° in the crimp tool and crimp the terminus a second time.

Step 10 - Verify that the kevlar does not protrude excessively from under the crimp sleeve. Excessive kevlar protrusion will cause the terminus to not seat properly in the finished connector. If excessive kevlar protrudes from under the crimp sleeve, trim it back using a razor blade.

NOTE: If the terminus was inserted into the cure adapter in Step 7, then Steps 11, 12 and 13 may be omitted.

Step 11 - Verify that there is a small amount of epoxy around the fiber where it protrudes from the ferrule. If it is found that there is no small bead of epoxy on the terminus tip, carefully add a small amount of epoxy around the fiber. (NOTE: There should only be a small amount of epoxy around the fiber to support it later during the polishing process. If too much epoxy is around the fiber during the curing process it may cause the fiber to crack.)

Step 12 - Using a wipe dampened with alcohol, carefully wipe away any excess epoxy on the fiber that is more than 2 mm (0.1 in) from the ferrule tip surface.

Step 13 - Insert the terminus into the cure adapter until it snaps into place (see figure 5A1-56).

Source: https://assist.dla.mil -- Downloaded: 2016-12-10T08:03Z
Check the source to verify that this is the current version before use.

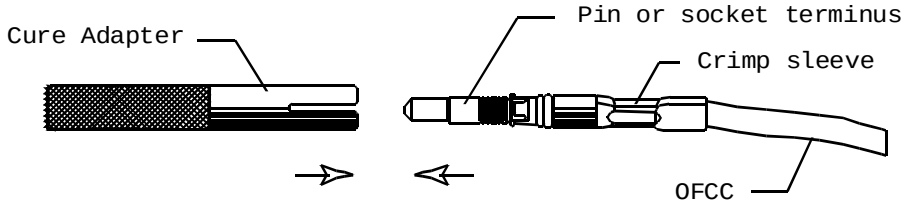

FIGURE 5A1-56. Inserting a terminus into a cure adapter.

Step 14 -Repeat steps 2 through 13 for each fiber to be terminated.

Step 15 -Place the cure adapters in the curing oven, and position the OFCCs vertically over the oven using the cable stand, cable stand ring and cable clip (see figure 5A1-57). Cure the epoxy for a minimum of 10 minutes (maximum of 30 minutes) at 120°C (248°F). (NOTE: When the OFCCs are positioned above the termini, make sure that no bends are placed in the OFCCs. Each OFCC should enter the terminus parallel to the terminus.)

NOTE: Alternate cure schedules may be used with approval of the Naval Surface Warfare Center (see 1.1.1).

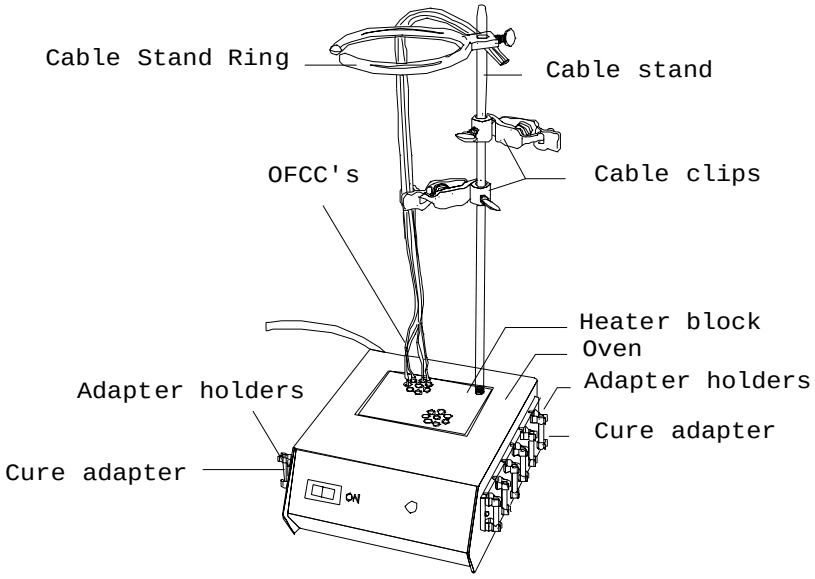

FIGURE 5A1-57. Termini in the curing oven.

Step 16 -Turn the curing oven off and remove the termini from the curing oven. Allow the cure adapters and termini to cool for approximately 4 minutes.

3.4.4 Polishing the fiber ends.

3.4.4.1 Flat end polish. This procedure will produce a terminus with a flat end polish. This procedure is applicable only for multimode applications.

Source: https://assist.dla.mil -- Downloaded: 2016-12-10T08:03Z
Check the source to verify that this is the current version before use.

Procedures for hand polishing are contained herein. Machine polishing may be used as an alternate method, provided the following requirements are satisfied:

a. The manufacturer's instructions will be rigidly adhered to, except that the polishing papers or disks shall be 5 um aluminum oxide foam backed, 1 um aluminum oxide mylar backed, and 0.1 um diamond mylar backed as used in hand polishing. (NOTE: Alternate polishing materials may be used if authorized approval is obtained and the polishing machine includes the appropriate stops to prevent changes to the ferrule length.)

b. The machine polished terminus shall undergo the same quality check used for the manually polished terminus as described herein.

NOTE: The procedures contained herein should produce an optical terminus with a physical contact (PC) polish.

Step 1 - WARNING: Wear safety glasses when scoring the fiber to avoid possible eye injury.

Remove the terminus from the cure adapter and score the fiber close to the terminus tip at the epoxy interface using one short light stroke with cleaving tool (see figure 5A1-58). (NOTE: Do not break the fibers with the cleaving tool.) Pull off each fiber with a gentle, straight pull. Deposit the waste fiber in a trash container.

NOTE: The termini not being polished should be left in the cure adapters during the polishing process to protect the fibers from breakage.

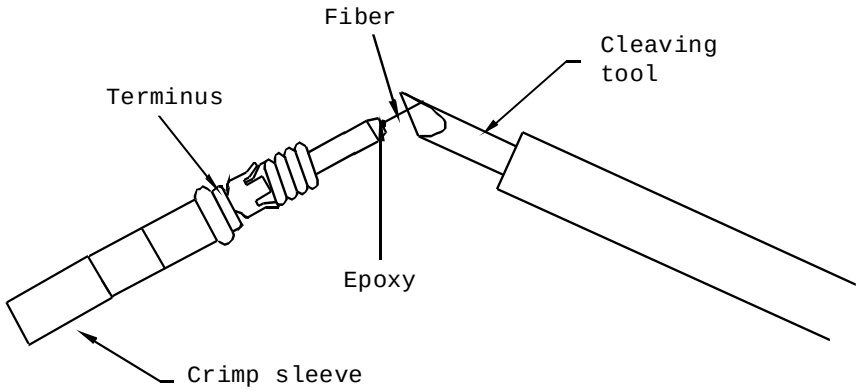

FIGURE 5A1-58. Scoring the fiber.

NOTE: Before inserting the terminus into the polishing tool, the terminus may be held vertically and the end of the fiber polished off by lightly running the 5 um polishing paper over the top of the terminus tip. (This is referred to as air polishing the terminus.)

Step 2 - Rotate the top half of the polishing tool 90° counterclockwise and separate the top from the base.

Step 3 - Place the end of the terminus insertion tool at the rear of the crimp sleeve with the OFCC laid in the tool channel (see figure 5A1-59).

Source: https://assist.dla.mil -- Downloaded: 2016-12-10T08:03Z
Check the source to verify that this is the current version before use.

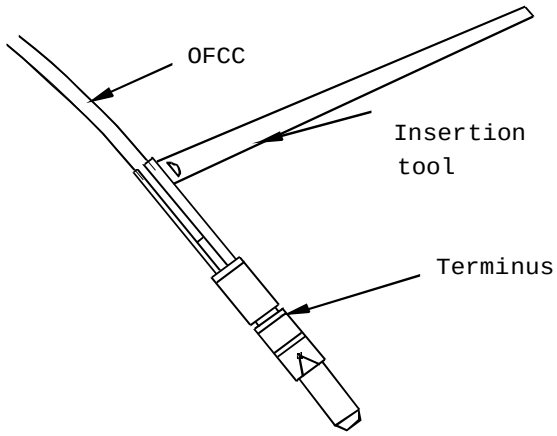

FIGURE 5A1-59. Placing the terminus in the insertion tool.

Step 4 - Insert the terminus into the center of the polishing tool top. Apply pressure with the insertion tool until the terminus snaps into place. Remove the tool by pulling straight back (see figure 5A1-60). (NOTE: Difficulty in inserting the terminus into the polishing tool may indicate epoxy on outside of the terminus, which must be removed before proceeding.)

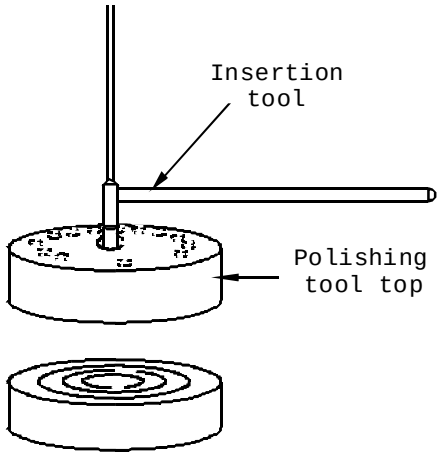

FIGURE 5A1-60. Inserting the terminus in the polishing tool.

Step 5 - Install the top half of the polishing tool on the bottom half and rotate it clockwise (90°) until it locks in place.

Step 6 - Clean the glass polishing plate, the backs of the polishing papers, and the surface of the polishing tool using a wipe dampened with alcohol. Blow all of the surfaces dry with air.

Step 7 - Place the 5 um polishing paper on the glass plate and start polishing the terminus with very light pressure (the weight of the tool) using a

Source: https://assist.dla.mil -- Downloaded: 2016-12-10T08:03Z
Check the source to verify that this is the current version before use.

figure-8 motion. Do not overpolish the terminus. (NOTE: The first polish is complete when all of the epoxy is almost gone from the tip of the terminus.) Since the polishing time varies with the amount of epoxy present on the tip of the terminus, inspect the terminus tip frequently. Whenever the polishing tool is lifted, remove the grit from the tool and the terminus with a wipe dampened with alcohol or with air. When polishing is complete, clean the terminus and the polishing tool using a wipe dampened with alcohol and blow them dry with air. Perform a rough inspection of the ferrule end using the eye loop.

Step 8 - Replace the 5 um paper with the 1 um paper. Polish the terminus with very light pressure using a figure-8 motion for approximately 10 to 20 complete motions.

NOTE: The 1 um polish is complete when all of the epoxy is gone from the tip of the terminus.

NOTE: The 1 um polish may also be performed using wet paper.

Step 9 - Replace the 1 um paper with the 0.1 um paper. Wet the paper and polish the terminus with very light pressure using a figure-8 motion for approximately 10 to 20 complete motions.

NOTE: The final polish may also be performed using dry paper.

Step 10 - Rotate the top of the polishing tool counterclockwise (90°) and separate the top from the base. Insert the terminus removal tool into the bottom of the terminus cavity of the polishing tool top and press on the hilt of the removal tool until the tool clicks into place (see figure 5A1-61). (NOTE: Make sure that the removal tool is clean before inserting the tool into the terminus cavity.) Depress the plunger and slide the terminus out of the polishing tool. Clean the terminus and the polishing tool with a wipe dampened with alcohol and blow them dry with air.

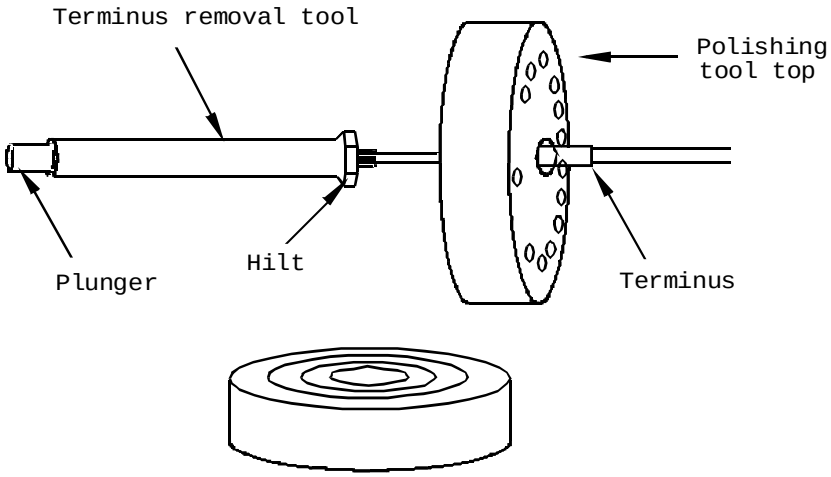

FIGURE 5A1-61. Removing the terminus from the polishing tool.

Step 11 - Repeat steps 1 through 10 for all of the termini.

Source: https://assist.dla.mil -- Downloaded: 2016-12-10T08:03Z
Check the source to verify that this is the current version before use.

3.4.4.2 Domed end polish.

3.4.4.2.1 Standard procedure. This procedure will produce a terminus with a domed end polish. This procedure is recommended for high quality multimode applications and single mode applications with a minimum return loss requirement of 30 db. Procedures for hand polishing are contained herein. Machine polishing may be used as an alternate method, provided the following requirements are satisfied:

a. The manufacturer's instructions will be rigidly adhered to, except that the polishing papers or disks shall be 5 um aluminum oxide foam backed, 1 um aluminum oxide mylar backed, and 0.1 um diamond mylar backed as used in hand polishing. (NOTE: Alternate polishing materials may be used if authorized approval is obtained and the polishing machine includes the appropriate stops to prevent changes to the ferrule length.)

b. The machine polished terminus shall undergo the same quality check used for the manually polished terminus as described herein.

NOTE: The procedures contained herein should produce an optical terminus with a physical contact (PC) polish.

Step 1- WARNING: Wear safety glasses when scoring the fiber to avoid possible eye injury.

Remove the terminus from the cure adapter and score the fiber close to the terminus tip at the epoxy interface using one short light stroke with cleaving tool (see figure 5A1-62). (NOTE: Do not break the fibers with the cleaving tool.) Pull off each fiber with a gentle, straight pull. Deposit the waste fiber in a trash container.

NOTE: The termini not being polished should be left in the cure adapters during the polishing process to protect the fibers from breakage.

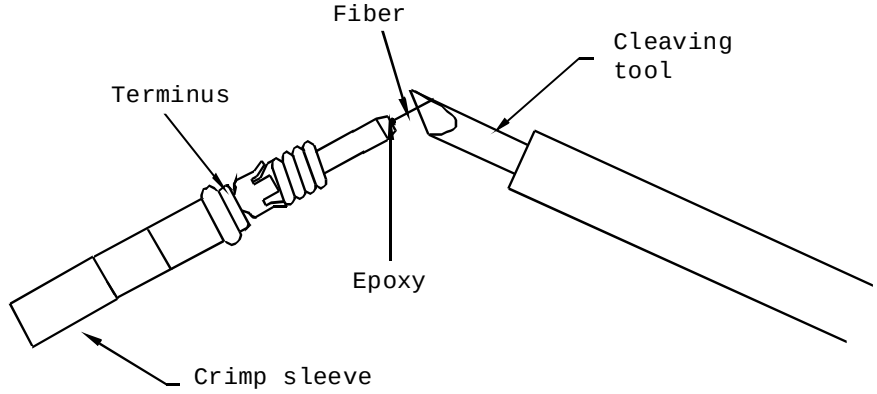

FIGURE 5A1-62. Scoring the fiber.

NOTE: Before inserting the terminus into the polishing tool, the terminus may be held vertically and the end of the fiber polished off by lightly running the 5 um polishing paper over the top of the terminus tip. (This is referred to as air polishing the terminus.)

Step 2 - Rotate the top half of the polishing tool 90° counterclockwise and separate the top from the base.

Source: https://assist.dla.mil -- Downloaded: 2016-12-10T08:03Z
Check the source to verify that this is the current version before use.

Step 3 - Place the end of the terminus insertion tool at the rear of the crimp sleeve with the OFCC laid in the tool channel (see figure 5A1-63).

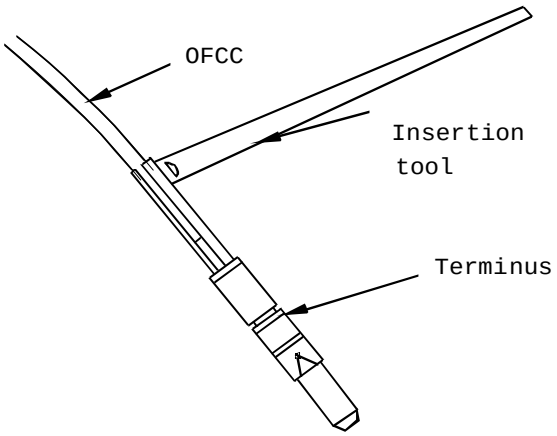

FIGURE 5A1-63. Placing the terminus in the insertion tool.

Step 4 - Insert the terminus into the center of the polishing tool top. Apply pressure with the insertion tool until the terminus snaps into place. Remove the tool by pulling straight back (see figure 5A1-64). (NOTE: Difficulty in inserting the terminus into the polishing tool may indicate epoxy on outside of the terminus that must be removed before proceeding.)

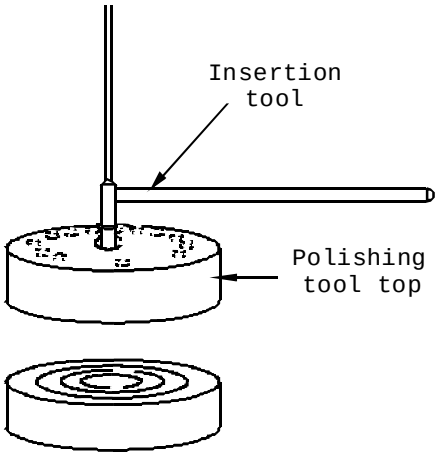

FIGURE 5A1-64. Inserting the terminus into the polishing tool.

Step 5 - Install the top half of the polishing tool on the bottom half and rotate it clockwise (90°) until it locks in place.

Step 6 - Clean the glass polishing plate, the resilient pad, the backs of the polishing papers, and the surface of the polishing tool using a wipe dampened with alcohol. Blow all of the surfaces dry with air.

Step 7 - Place the 5 um polishing paper on the glass plate and start polishing the terminus with very light pressure (the weight of the tool) using a

Source: https://assist.dla.mil -- Downloaded: 2016-12-10T08:03Z
Check the source to verify that this is the current version before use.

figure-8 motion. Do not overpolish the terminus. (NOTE: The first polish is complete when all of the epoxy is almost gone from the tip of the terminus.) Since the polishing time varies with the amount of epoxy present on the tip of the terminus, inspect the terminus tip frequently. Whenever the polishing tool is lifted, remove the grit from the tool and the terminus with a wipe dampened with alcohol or with air. When polishing is complete, clean the terminus and the polishing tool using a wipe dampened with alcohol and blow them dry with air. Perform a rough inspection of the ferrule end using the eye loop.

Step 8 - Place the resilient pad on top of the glass plate. Place the 1 um paper on the resilient pad. Wet the paper and polish the terminus with no pressure using a figure-8 motion for approximately 10 complete motions.

NOTE: The polish tool should hydroplane above the paper surface during this polish.

NOTE: The 1 um polish is complete when all of the epoxy is gone from the tip of the terminus.

NOTE: The 1 um polish may also be performed using dry paper.

Step 9 - Replace the 1 um paper with the 0.1 um paper. Wet the paper and polish the terminus with no pressure using a figure-8 motion for approximately 20 to 30 complete motions.

NOTE: The polish tool should hydroplane above the paper surface during this polish.

Step 10 - Rotate the top of the polishing tool counterclockwise (90°) and separate the top from the base. Insert the terminus removal tool into the bottom of the terminus cavity of the polishing tool top and press on the hilt of the removal tool until the tool clicks into place (see figure 5A1-65). (NOTE: Make sure that the removal tool is clean before inserting the tool into the terminus cavity.) Depress the plunger and slide the terminus out of the polishing tool. Clean the terminus and the polishing tool with a wipe dampened with alcohol and blow them dry with air.

Source: https://assist.dla.mil -- Downloaded: 2016-12-10T08:03Z
Check the source to verify that this is the current version before use.

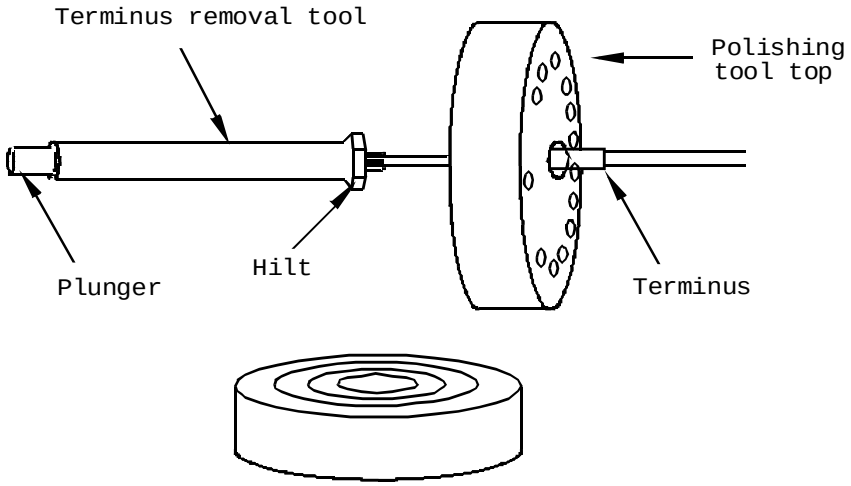

FIGURE 5A1-65. Removing the terminus from the polishing tool.

Step 11 -Repeat steps 1 through 10 for all of the termini.

3.4.4.2.2 Enhanced procedure. This procedure will produce a terminus with a domed end polish. This procedure is typically used for single mode applications with a minimum return loss requirement of 40 db, or when specified in the contract. Procedures for hand polishing are contained herein. Machine polishing may be used as an alternate method, provided the following requirements are satisfied:

a. The manufacturer's instructions will be rigidly adhered to, except that the polishing papers or disks shall be 5 um aluminum oxide foam backed, 1 um aluminum oxide mylar backed, 0.1 um diamond mylar backed, and ultrafine mylar backed as used in hand polishing. (NOTE: Alternate polishing materials may be used if authorized approval is obtained and the polishing machine includes the appropriate stops to prevent changes to the ferrule length.)

b. The machine polished terminus shall undergo the same quality check used for the manually polished terminus as described herein.

NOTE: The procedures contained herein should produce an optical terminus with a physical contact (PC) polish.

Step 1 - Perform steps 1 through 9 of the standard polish procedure.

Step 2 - Replace the 0.1 um paper with the ultrafine paper. Wet the paper and polish the terminus with light pressure using a figure-8 motion for 10 to 30 complete motions.

NOTE: The glossy side of the ultrafine paper should be placed facing the resilient pad.

NOTE: The polish tool should hydroplane above the paper surface during this polish.

Step 3 - Rotate the top of the polishing tool counterclockwise (90°) and separate the top from the base. Insert the terminus removal tool into the bottom of the terminus cavity of the polishing tool top and press on the hilt of the removal tool until the tool clicks into place (see

Source: https://assist.dla.mil -- Downloaded: 2016-12-10T08:03Z
Check the source to verify that this is the current version before use.

figure 5A1-66). (NOTE: Make sure that the removal tool is clean before inserting the tool into the terminus cavity.) Depress the plunger and slide the terminus out of the polishing tool. Clean the terminus and the polishing tool with a wipe dampened with alcohol and blow them dry with air.

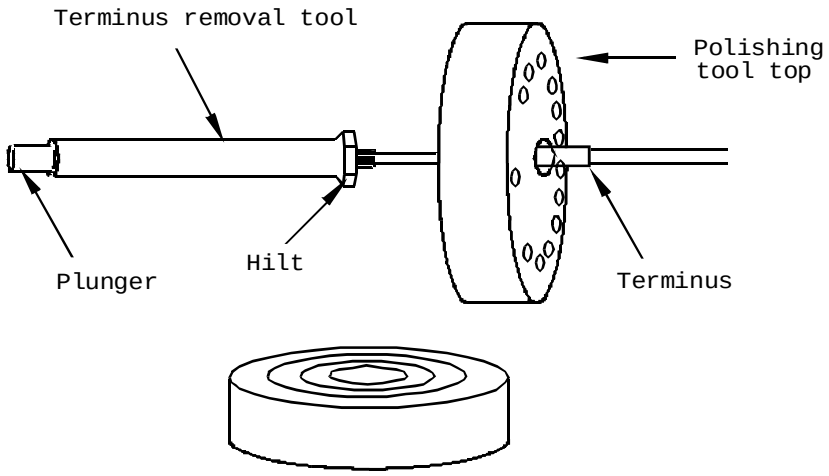

FIGURE 5A1-66. Removing the terminus from the polishing tool.

Step 4 - Repeat steps 1 through 3 for all of the termini.

3.4.5 Quality check.

Step 1 - Examine the terminus with the optical microscope to ensure that the optical surface is smooth and free of scratches, pits, chips, and fractures (see figure 5A1-67). If any defects are present, repeat the polish with the 0.1 um paper (and the ultrafine paper for enhanced polish termini) or reterminate the fiber. (NOTE: Do not polish the terminus more than necessary to pass the quality check.) A high intensity back light may be used to illuminate the fiber during the quality check.

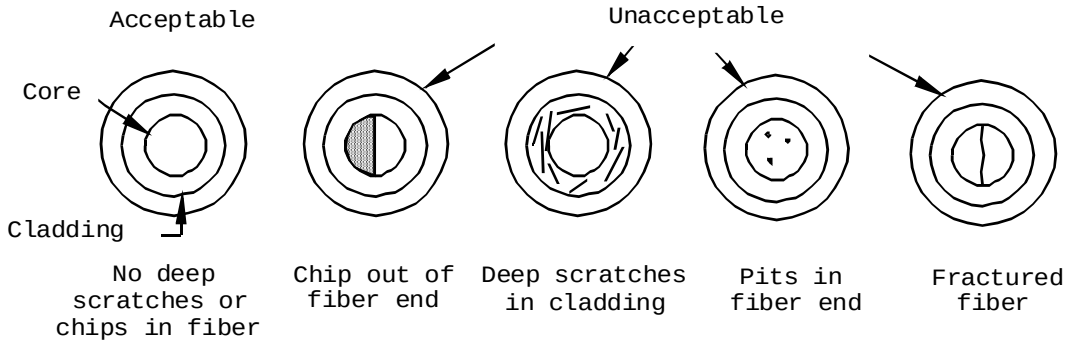

FIGURE 5A1-67. Quality check.

NOTE: Depending on the optical microscope used, viewing quality may be different.

Source: https://assist.dla.mil -- Downloaded: 2016-12-10T08:03Z
Check the source to verify that this is the current version before use.

NOTE: A small number of very light scratches (e.g. scratches that can barely be seen) is minimally acceptable.

3.4.6 Installation of the terminus into the connector insert.

NOTE: Inspect the connector insert for dirt or other debris before installing termini into the insert. Clean dirty inserts prior to installing termini.

Step 1 - Place the end of the terminus insertion tool at the rear of the crimp sleeve with the OFCC laid in the tool channel (see figure 5A1-63).

Step 2 - Place the terminus in the proper cavity in the rear of the connector insert. Apply pressure with the insertion tool until the terminus snaps into place (see figure 5A1-68). Remove the tool by pulling straight back. (NOTE: A properly inserted terminus will have some axial "play" within the insert cavity.)

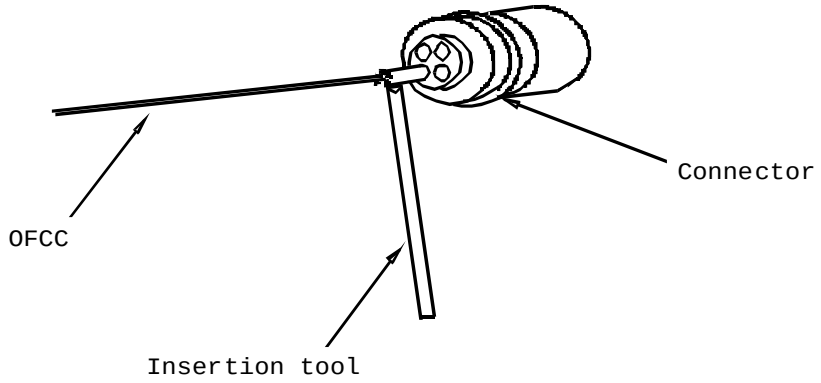

FIGURE 5A1-68. Installing the terminus in the insert.

NOTE: A socket terminus, unlike a pin terminus, will require installation of the alignment sleeve after seating the terminus. Proceed to step 3 below for socket termini. For pin termini repeat steps 1 and 2 for the rest of the termini.

Step 3 - Place the end of the socket terminus alignment sleeve installation and removal tool into the solid end of the alignment sleeve, depress the plunger to grasp the alignment sleeve, and place the sleeve into the socket terminus cavity in the face of the insert (see figure 5A1-69). Release the plunger and press until the sleeve snaps onto the groove on the ceramic terminus body.

CAUTION: Do not rotate the tool after the sleeve is installed in the insert.

CAUTION: Do not press the sleeve into place with the plunger depressed. This may cause damage to the inner ceramic tube.

Remove the tool by pulling straight back. Proceed to step 4 below.

Source: https://assist.dla.mil -- Downloaded: 2016-12-10T08:03Z
Check the source to verify that this is the current version before use.

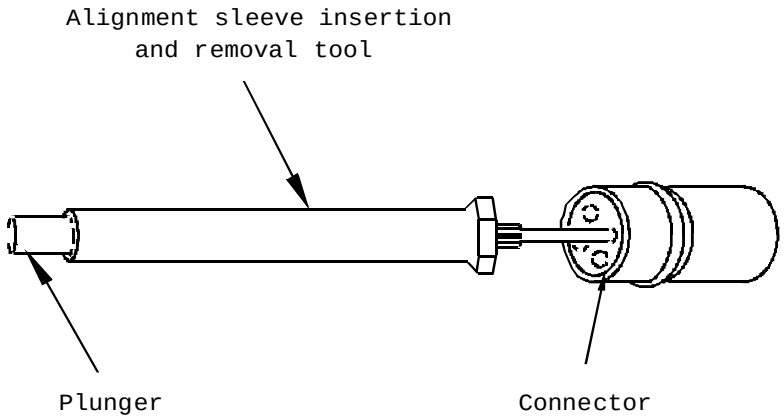

FIGURE 5A1-69. Installing the alignment sleeve.

Step 4 - Repeat steps 1 through 3 for all of the termini.

Step 5 - Install the plastic protective cap over the front of the connector.

3.4.7 Removal of the termini from the connector insert.

NOTE: Perform this procedure only if the termini are to be removed from the connector.

NOTE: Proceed to step 1 below for socket termini. Proceed to step 2 below for pin termini.

Step 1 - CAUTION: Do not rotate the tool while the sleeve is in the insert.

Remove the alignment sleeves from the socket termini using the terminus alignment sleeve installation and removal tool by inserting the tool end into the alignment sleeve and depressing the plunger so that the tool grasps the sleeve. Pull the sleeve straight back. Proceed to step 2.

Step 2 - Insert the terminus removal tool into the terminus cavity from the front of the insert and press on the hilt of the tool until it snaps into place (see figure 5A1-70). (NOTE: Make sure that the removal tool is clean before inserting the tool into the terminus cavity.) Depress the plunger to slide the terminus out the rear of the insert.

Source: https://assist.dla.mil -- Downloaded: 2016-12-10T08:03Z
Check the source to verify that this is the current version before use.

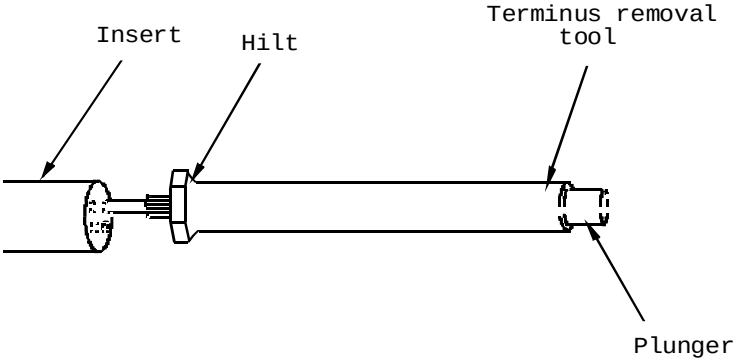

FIGURE 5A1-70. Removing the terminus from the insert.

3.5 Procedure IV. Method 5A1-4 Installation of connectors with light duty strain reliefs. This method shall be used to assemble connectors with part numbers M28876/1 and M28876/11 configured with light duty strain reliefs onto OFCCs.

(This section is intentionally left blank. These products are currently under development. Procedures addressing these products will be included within this standard at a later date.)

Source: https://assist.dla.mil -- Downloaded: 2016-12-10T08:03Z
Check the source to verify that this is the current version before use.

METHOD 5B1

SINGLE TERMINUS CONNECTOR INSTALLATION

1. SCOPE.

1.1 Scope. This method shall be used for installing MIL-C-83522 single terminus (light duty) connectors onto OFCCs.

2. REQUIRED EQUIPMENT AND MATERIALS.

2.1 The equipment and materials in table 5B1-I shall be used to perform this procedure:

TABLE 5B1-I. Equipment and materials.

Description	Quantity
Wipes (NAVSEA DWG 6872811-18)	As required
Alcohol bottle with alcohol/2-propanol or equal (sealable type)	1
Canned air or compressed air	As required
OFCC strip tool (NAVSEA DWG 6872811-10 or equal)	1
Kevlar shears (NAVSEA DWG 6872811-16)	1
Safety glasses	1
Ruler	1
Buffer strip tool (NAVSEA DWG 6872811-9 or equal)	1
Cleaning wire (NAVSEA DWG 6872811-24 or equal)	As required
Epoxy (MIL-PRF-24792)	As required
Syringe with dispensing needles (NAVSEA DWG 6872811-22 or equal)	As required
Cure adapters (NAVSEA DWG 6872811-27 or equal)	As required
Crimp tool (NAVSEA DWG 6872811-1 or equal)	1
Die for crimp tool (NAVSEA DWG 6872811-2 or equal)	1
Heat gun (Raychem 500B or equal)	1
Curing oven (NAVSEA DWG 6872811-13 or equal)	1
Holder block	As required
Cleaver (NAVSEA DWG 6872811-7 or equal)	1

Source: https://assist.dla.mil -- Downloaded: 2016-12-10T08:03Z
Check the source to verify that this is the current version before use.

TABLE 5B1-I. Equipment and materials – continued.

Description	Quantity
Glass polishing plate (NAVSEA DWG 6872811-3 or equal)	1
Polishing paper (5 um aluminum oxide, foam backed) (NAVSEA DWG 6872811-20 or equal)	As required
Polishing tool (NAVSEA DWG 6872811-4, NAVSEA DWG 6872811-30 or equal)	1
Polishing paper (1 um aluminum oxide, mylar backed) (NAVSEA DWG 6872811-19 or equal)	As required
Water bottle (sealable type)	1
Optical microscope 400X (NAVSEA DWG 6872811-25 or equal)	1
Protective caps (plastic)	As required
Boot ring tool (NAVSEA DWG 6872811-32 or equal)	1
Polishing paper (0.1 um diamond, mylar backed) (NAVSEA DWG 6872811-31 or equal)	As required
Resilient pad (70 to 90 durometer)(NAVSEA DWG 6872811-32 or equal)	1
Polishing paper (ultrafine, mylar backed) (JDS Optics HF5D or equal)	As required

CAUTION: Throughout the termination process, cleanliness is critical to obtaining a high optical quality connector. Make sure that your hands and the work area are as clean as possible to minimize the ingress of dirt into the connector parts.

NOTE: Verify that the epoxy shelf life has not expired. Do not use epoxy with an expiration date that has passed. Epoxy shelf life can be extended if the epoxy is refrigerated. Contact the epoxy vendor or the Naval Surface Warfare Center (see 1.1.1) for additional information.

3. PROCEDURE

3.1 Safety summary. The following safety precautions shall be observed:

a. Safety glasses shall be worn at all times when handling bare fibers or dispensing epoxy.

b. Do not touch the ends of the fiber as they may be razor sharp. Wash your hands after handling bare fiber.

c. Avoid skin contact with epoxies.

Source: https://assist.dla.mil -- Downloaded: 2016-12-10T08:03Z
Check the source to verify that this is the current version before use.

d. When visually inspecting an optical fiber, never stare into the end of a fiber connected to a laser source or LED.

3.2 Procedure.

3.2.1 Cable and fiber preparation.

NOTE: If the cable jacket has not been removed, refer to Method 2A1 and Method 2B1 of Part 2 of this standard practice.

NOTE: Keep the OFCCs and connector parts free from oil, dirt and grease throughout the installation procedure. If cleaning is necessary, use a wipe dampened with alcohol and blow the part dry with air.

NOTE: This procedure utilizes heat shrink tubing (with identification markings) for the identification of individual OFCCs. Other permanent methods of identification may be used with authorized approval.

Step 1 - Measure the OFCCs to the required length (refer to the equipment drawings or to Method 2C1 of Part 2 of this standard practice). Then add sufficient slack to allow for at least two terminations [40 mm (1.6 in) of slack should be sufficient for one retermination].

Step 2 - Slip the heat shrink tubing (with the fiber identification), the connector boot ring (FSI connectors only), the connector boot, and the crimp sleeve over the OFCC (see figure 5B1-1).

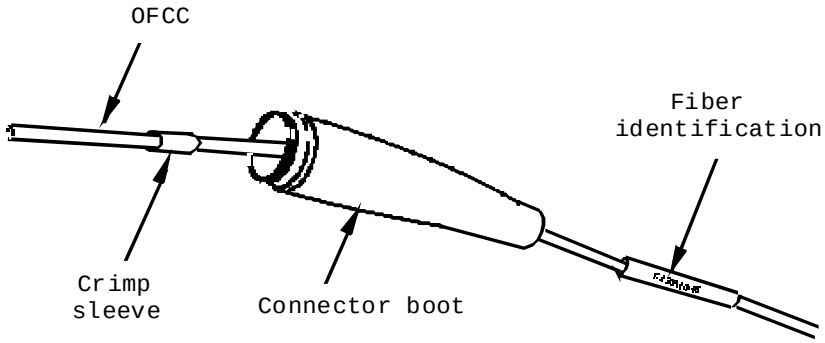

FIGURE 5B1-1. Installing the identification sleeve and connector boot – (typical).

Step 3a - For Lucent Technologies connectors only: remove the OFCC jacket back 30 mm (1.20 in) from the end of the fiber using the OFCC stripper and trim the OFCC kevlar with the kevlar shears so that approximately 6 mm (0.25 in) extends past the OFCC jacket (see figure 5B1-2).

Source: https://assist.dla.mil -- Downloaded: 2016-12-10T08:03Z
Check the source to verify that this is the current version before use.

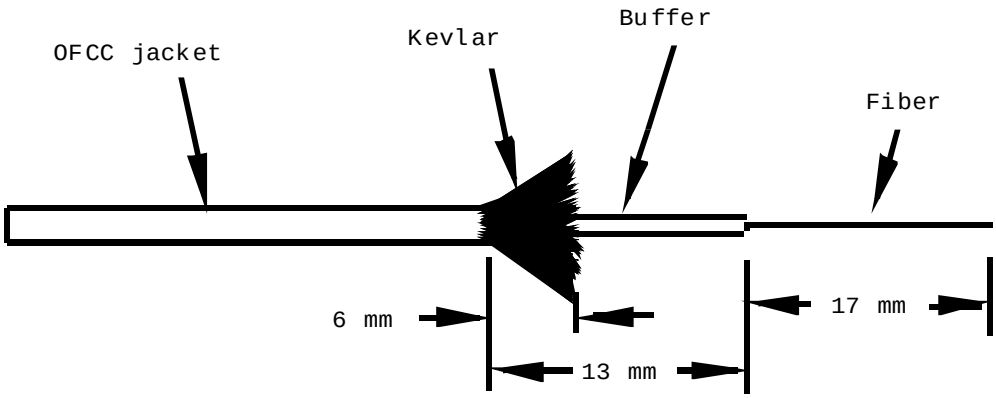

Figure not to scale

FIGURE 5B1-2. Prepared OFCC dimensions for Lucent connectors.

NOTE: 13 mm = 0.51 in.

NOTE: The tolerance on dimensions is +/- 1 mm (+/- 0.04 in).

NOTE: An exposed fiber length less than 17 mm (0.67 in) may be used.

Step 3b -For Fiber Systems International connectors only: remove the OFCC jacket back 34 mm (1.34 in) from the end of the fiber using the OFCC stripper and trim the OFCC kevlar with the kevlar shears so that approximately 6 mm (0.25 in) extends past the OFCC jacket (see figure 5B1-3).

NOTE: The optimum way to remove the OFCC jackets is to ring cut the jacket with the OFCC stripper and pull the jacket off by hand. Pushing off the OFCC jacket with a tightly held OFCC stripper can lead to fiber breakage.

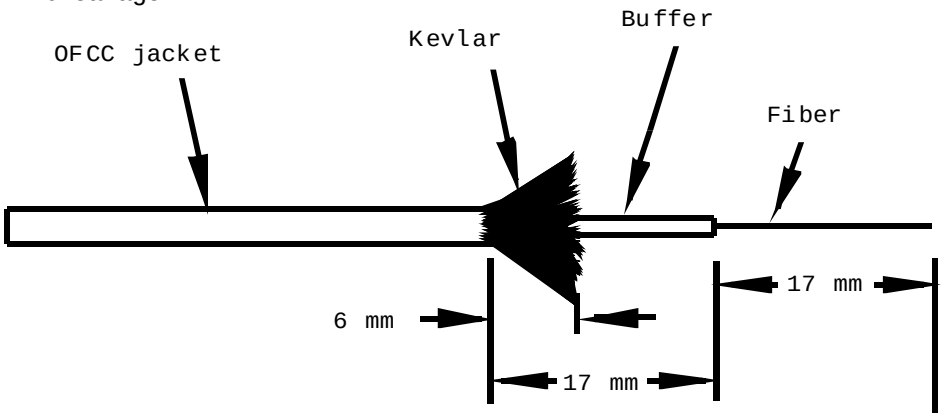

Figure not to scale

FIGURE 5B1-3. Prepared OFCC dimensions for Fiber Systems International connectors.

Source: https://assist.dla.mil -- Downloaded: 2016-12-10T08:03Z
Check the source to verify that this is the current version before use.

NOTE: 17 mm = 0.67 in.

NOTE: The tolerance on dimensions is +/- 1 mm (+/- 0.04 in).

NOTE: An exposed fiber length less than 17 mm (0.67 in) may be used.

Step 4 - WARNING: Wear safety glasses when removing the fiber buffer and coating to avoid possible eye injury.

Mark the fiber buffer to the dimension shown in figure 5B1-2 or figure 5B1-3 and remove the fiber buffer and coating back to the mark using the buffer stripper. Remove the buffer and coating in small sections (approximately 6 mm (0.25 in) at a time.) (NOTE: Normally, the buffer and coating are tightly adhered to one another and come off of the fiber at the same time.)

Step 5 - CAUTION: The uncoated fiber is in its most vulnerable state. Take extreme care not to damage the fiber.

Remove any residual coating material from the bare fiber with a wipe dampened with alcohol. Wipe once from the end of the buffer towards the end of the fiber. (NOTE: Do not repeatedly wipe the bare fiber as this will weaken the fiber.)

3.2.2 Installation of the connector onto the fiber.

NOTE: The curing oven may be turned on at this time to allow proper warm up (approximately 20 minutes) before the connector is placed into it.

Step 1 - Inspect the connector and verify that the ferrule hole is free and clean of dirt. This can be accomplished by holding the front of the connector up to a light and verifying that the light is visible from the rear of the connector. If light cannot be seen through the connector, push music wire through the ferrule hole to clear it. Then blow dry air through the hole to remove any debris.

Step 2 - Remove the divider from a 2-part epoxy package and mix the two parts together until the epoxy is a smooth uniform color (see figure 5B1-4). The epoxy can be mixed by either repeatedly rolling or gently sliding the divider over the package.

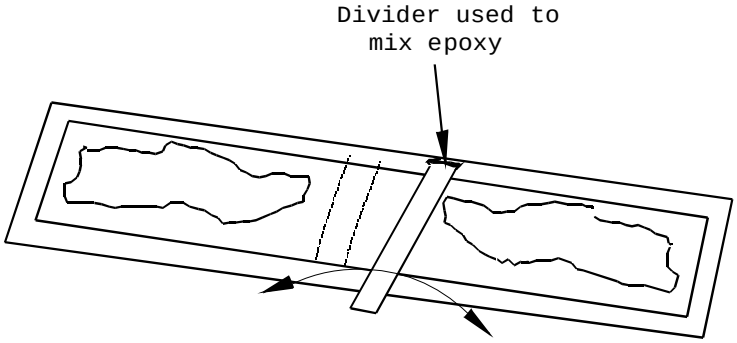

FIGURE 5B1-4. Mixing the epoxy.

Source: https://assist.dla.mil -- Downloaded: 2016-12-10T08:03Z
Check the source to verify that this is the current version before use.

NOTE: Alternatively, the epoxy may be mixed by massaging the epoxy package by hand.

CAUTION: Do not introduce large air bubbles into the epoxy during the mixing process. Large air bubbles in the epoxy can lead to connector failure during temperature extremes.

Step 3 - Install the syringe tip on the syringe, remove the plunger, and squeeze the epoxy into the syringe. Replace the plunger.

Step 4 - WARNING: Wear safety glasses while dispensing the epoxy to avoid possible eye injury.

Remove air pockets in the syringe by holding the tip of the syringe upward and dispensing epoxy onto a wipe until it runs free and clear.

Step 5 - Slide the connector, rear first, onto the syringe tip (see figure 5B1-5). Keeping the syringe vertical, depress the plunger and slowly inject epoxy into the connector until it escapes out of the ferrule, forming a very small bead. (NOTE: Do not overfill. Be extremely careful not to get epoxy on the connector spring or other connector moving parts.)

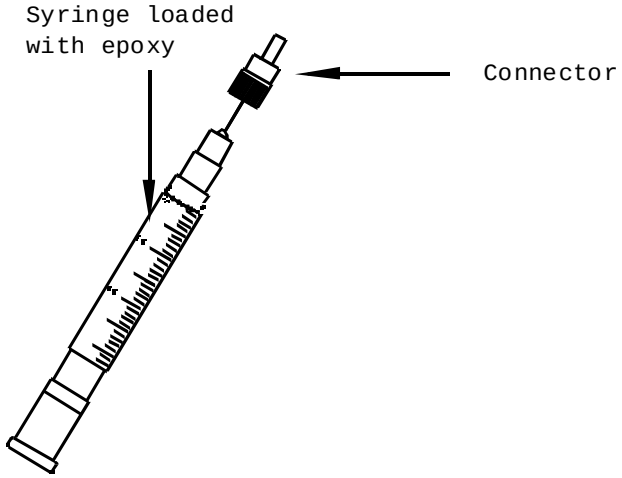

FIGURE 5B1-5. Injecting epoxy into the connector.

Step 6 - Withdraw the syringe from the connector. Maintain some pressure on the plunger as the syringe is withdrawn so that the connector is completely filled with epoxy. Using a wipe dampened with alcohol, wipe away any epoxy on the outer diameter of the ferrule without disturbing the epoxy bead.

NOTE: Alternatively, the connector may be completely filled by maintaining a light pressure on the syringe plunger and allowing the epoxy to push the connector off of the syringe tip.

Step 7 - Apply a very thin coating of epoxy to the kevlar strands and the buffer.

Step 8 - Apply a very thin band of epoxy to approximately 3 mm (0.12 in) of the connector barrel (see figure 5B1-6).

Source: https://assist.dla.mil -- Downloaded: 2016-12-10T08:03Z
Check the source to verify that this is the current version before use.

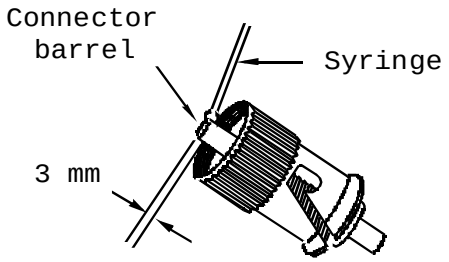

FIGURE 5B1-6. Applying epoxy to the connector barrel.

NOTE: At this point, the connector may be inserted into the cure adapter. Refer to Step 10 for insertion of the connector into the cure adapter.

Step 9 - Feather the kevlar evenly around the fiber and insert the fiber into the rear of the connector (see figure 5B1-7). Gently work the fiber through the connector until the buffer seats against the rear of the ferrule. (The connector should be rotated around the fiber as the fiber is inserted.) The OFCC jacket should come up to the rear of the connector barrel and the kevlar should surround the rear of the connector barrel. Do not allow kevlar to enter the rear of the connector. Once inserted, do not allow the fiber to slip back.

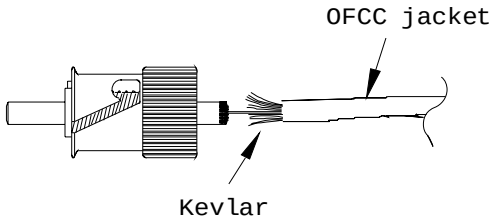

FIGURE 5B1-7. Inserting the fiber into the connector.

Step 10 - If the cure adapter was not previously installed onto the connector, carefully place the cure adapter over the fiber and mate it to the connector so that the connector barrel is at maximum extension from the rear of the connector (place the cure adapter nub at end of the connector ramp, just before the normal mated position). Slide the crimp sleeve over the OFCC jacket and kevlar onto the connector barrel (see figure 5B1-8).

NOTE: The fiber must not protrude beyond the end of the cure adapter. If it does, trim the fiber end so it does not.

Source: https://assist.dla.mil -- Downloaded: 2016-12-10T08:03Z
Check the source to verify that this is the current version before use.

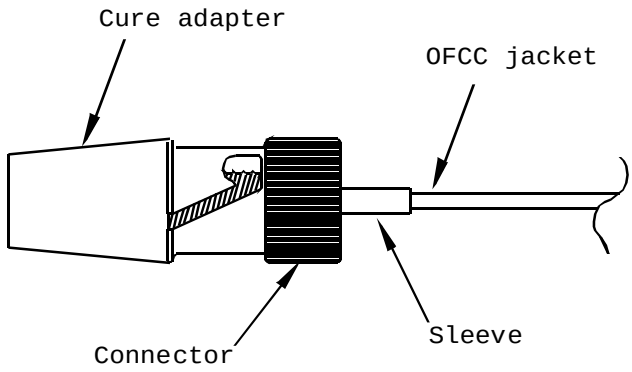

FIGURE 5B1-8. Sliding the crimp sleeve over the connector barrel.

Step 11 -Place the crimping tool over the crimp sleeve and crimp it against the connector barrel. Rotate the connector 90° and crimp it again (see figure 5B1-9).

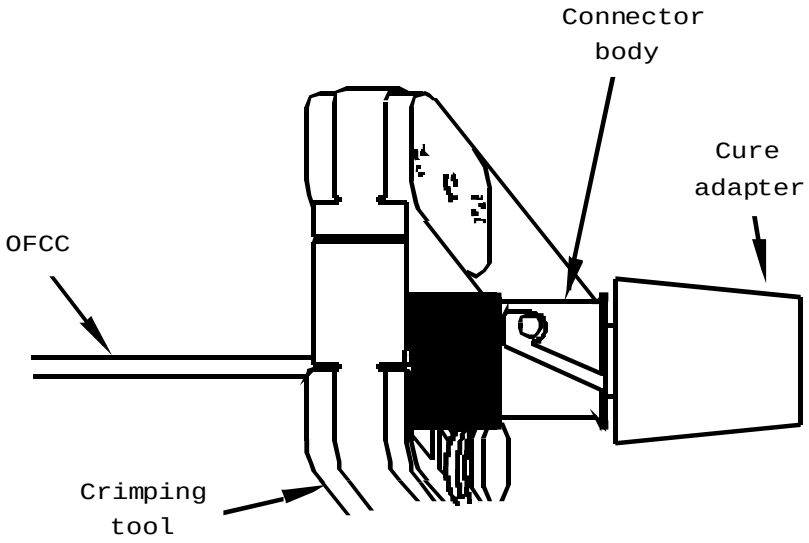

FIGURE 5B1-9. Crimping the connector.

NOTE: The cure adapter may be removed from the connector to perform steps 12 and 13.

Step 12 -Verify that there is a small amount of epoxy around the fiber where it protrudes from the ferrule. If it is found that there is no small bead of epoxy on the ferrule tip, carefully add a small amount of epoxy around the fiber. (NOTE: There should only be a small amount of epoxy around the fiber to support it later during the polishing process. If too much epoxy is around the fiber during the curing process it may cause the fiber to crack.)

Step 13 -Using a wipe dampened with alcohol, carefully wipe away any epoxy on the fiber that is more than 2 mm (0.1 in) from the ferrule surface.

Source: https://assist.dla.mil -- Downloaded: 2016-12-10T08:03Z
Check the source to verify that this is the current version before use.

NOTE: If the cure adapter was removed to perform steps 12 and 13, it should be re-mated to the connector at this time.

Step 14 - For Lucent connectors only: Apply a drop of epoxy onto the rubber boot threads, slip the boot over the crimped sleeve and screw it onto the connector body.

Step 15 - For Fiber Systems International connectors only: Slip the boot over the crimped sleeve onto the connector body until it snaps into the groove (at the rear of the connector body). Using the boot ring tool, slide the boot ring up the boot until it snaps into the same groove on the connector body. (NOTE: The boot ring can also be pushed up the boot by hand.)

Step 16 - CAUTION: Do not overheat the OFCC. Prolonged exposure of the OFCC to temperatures above 160°C (320°F) may damage the OFCC jacket. Discontinue heating of the tubing and allow the jacket to cool before reheating if the jacket shows any signs of bubbling.

Slide the fiber identification tubing up the OFCC to near the connector boot and shrink it over the OFCC using a heat gun.

3.2.3 Curing the epoxy.

Step 1 - Turn on the curing oven so that it attains the proper temperature before the connector is placed within it (approximately 20 minutes).

NOTE: The oven may be turned on early in the connector assembly process so that it is already at the proper temperature.

Step 2 - Place the cure adapter with the connector in the curing oven, and position the OFCC vertically over the oven. Cure the epoxy for a minimum of 10 minutes (maximum of 30 minutes) at 120°C (248°F). (NOTE: When the OFCC is positioned above the connector, make sure that no bends are placed in the OFCC. The OFCC should enter the connector parallel to the connector axis.)

NOTE: Alternate cure schedules may be used with approval of the Naval Surface Warfare Center (see 1.1.1).

Step 3 - Turn the curing oven off, remove the connector and cure adapter from the curing oven, and place them on a cure adapter holder block or non-flammable surface. Allow the cure adapter and connector to cool for approximately 4 minutes.

3.2.4 Polishing the fiber ends.

3.2.4.1 Flat end polish. This procedure will produce a connector with a flat end polish. This procedure is applicable only for multimode applications. Procedures for hand polishing are contained herein. Machine polishing may be used as an alternate method, provided the following requirements are satisfied:

a. The manufacturer's instructions will be rigidly adhered to, except that the polishing papers or disks shall be 5 um aluminum oxide foam backed, 1 um aluminum oxide mylar backed, and 0.1 um diamond mylar backed, as used in hand polishing. (NOTE: Alternate polishing materials may be used if authorized approval is obtained and the polishing machine includes the appropriate stops to prevent changes to the ferrule length.)

Source: https://assist.dla.mil -- Downloaded: 2016-12-10T08:03Z
Check the source to verify that this is the current version before use.

b. The machine polished connector shall undergo the same quality check used for the manually polished connector as described herein.

NOTE: The procedures contained herein should produce an optical terminus with a physical contact (PC) polish.

Step 1 - WARNING: Wear safety glasses when scoring the fiber to avoid possible eye injury.

Remove the connector from the cure adapter and score the fiber close to the ferrule tip at the epoxy interface using one short light stroke with the cleaving tool (see figure 5B1-10). (NOTE: Do not break the fiber with the cleaving tool.) Pull off the fiber with a gentle, straight pull. Deposit the waste fiber in a trash container.

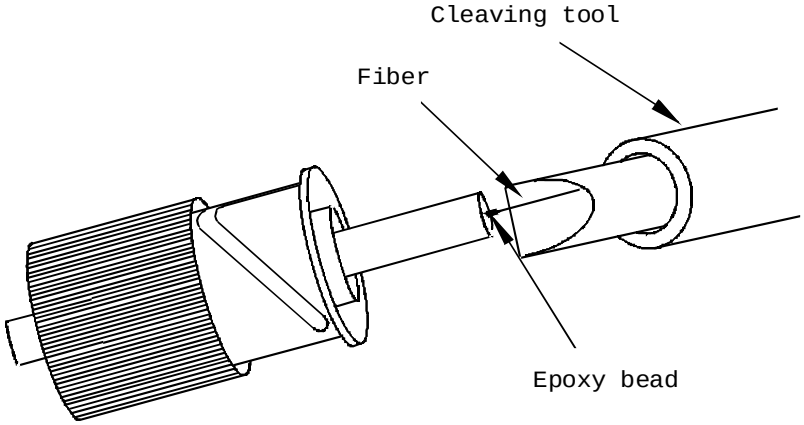

FIGURE 5B1-10. Scoring the fiber.

Step 2 - Clean the glass polishing plate, the backs of the polishing papers, and the surface of the polishing tool using a wipe dampened with alcohol. Blow all of the surfaces dry with air.

NOTE: Before inserting the connector into the polishing tool, the connector may be held vertically and the end of the fiber polished off by lightly running the 5 um polishing paper over the top of the ferrule tip. (This is referred to as air polishing the connector.)

Step 3 - Insert the connector into the polishing tool (see figure 5B1-11). (NOTE: Difficulty in inserting the connector ferrule into the polishing tool may indicate epoxy on outside of the ferrule that must be removed before proceeding.)

Source: https://assist.dla.mil -- Downloaded: 2016-12-10T08:03Z
Check the source to verify that this is the current version before use.

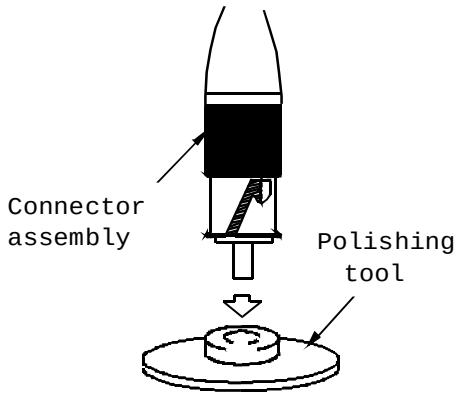

FIGURE 5B1-11. Inserting the connector into the polishing tool.

Step 4 - Place the 5 um polishing paper on the glass plate and start polishing the connector with very light pressure (the weight of the tool) using a figure-8 motion (see figure 5B1-12). Do not overpolish the connector. (NOTE: The first polish is complete when all of the epoxy is almost gone from the tip of the ferrule.) Since the polishing time varies with the amount of epoxy present on the tip of the ferrule, inspect the ferrule tip frequently. Whenever the polishing tool is lifted, remove the grit from the tool and the ferrule using a wipe dampened with alcohol or with air. When polishing is complete, clean the ferrule and the polishing tool using a wipe dampened with alcohol and blow them dry with air. Perform a rough inspection of the ferrule end using the eye loop.

NOTE: For some ferrule designs all of the epoxy cannot be removed during the first polish and a slight epoxy haze will naturally remain on the ferrule endface.

Source: https://assist.dla.mil -- Downloaded: 2016-12-10T08:03Z
Check the source to verify that this is the current version before use.

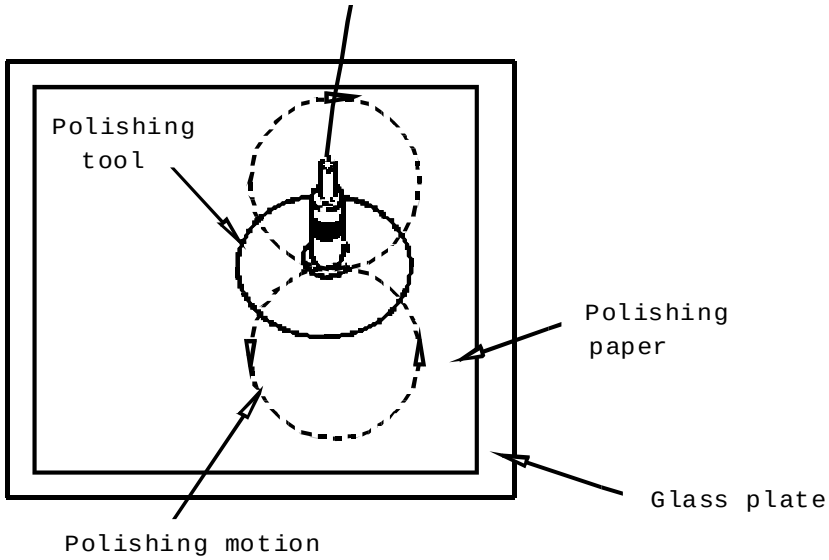

FIGURE 5B1-12. Polishing the connector.

Step 5 - Replace the 5 um paper with the 1 um paper. Polish the connector with very light pressure using a figure-8 motion for approximately 10 to 20 complete motions.

NOTE: The 1 um polish is complete when all of the epoxy is gone from the tip of the terminus.

NOTE: The 1 um polish may also be performed using wet paper.

Step 6 - Replace the 1 um paper with the 0.1 um paper. Wet the paper and polish the connector with very light pressure using a figure-8 motion for approximately 10 to 20 complete motions.

NOTE: The final polish may also be performed using dry paper.

Step 7 - Remove the connector from the polishing tool, and clean it using a wipe dampened with alcohol and blow it dry with air.

3.2.4.2 Domed end polish.

NOTE: For ST connectors, this procedure only works for connector ferrules that have been pre-radiused by the connector manufacturer. Some multimode optical fiber connectors may not have pre-radiused ferrules. When implementing this procedure on multimode optical fiber connectors, verify with the connector manufacturer that the connectors have pre-radiused ferrules.

3.2.4.2.1 Standard procedure. This procedure will produce a connector with a domed end polish. This procedure is recommended for high quality multimode applications and single mode applications with a minimum return loss requirement of 30 db. Procedures for hand polishing are contained herein. Machine polishing may be used as an alternate method, provided the following requirements are satisfied:

a. The manufacturer's instructions will be rigidly adhered to, except that the polishing papers or disks shall be 5 um aluminum oxide foam backed, 1

Source: https://assist.dla.mil -- Downloaded: 2016-12-10T08:03Z
Check the source to verify that this is the current version before use.

um aluminum oxide mylar backed, and 0.1 um diamond mylar backed, as used in hand polishing. (NOTE: Alternate polishing materials may be used if authorized approval is obtained and the polishing machine includes the appropriate stops to prevent changes to the ferrule length.)

b. The machine polished connector shall undergo the same quality check used for the manually polished connector as described herein.

NOTE: The procedures contained herein should produce an optical terminus with a physical contact (PC) polish.

Step 1 - WARNING: Wear safety glasses when scoring the fiber to avoid possible eye injury.

Remove the connector from the cure adapter and score the fiber close to the ferrule tip at the epoxy interface using one short light stroke with cleaving tool (see figure 5B1-13). (NOTE: Do not break the fiber with the cleaving tool.) Pull off the fiber with a gentle, straight pull. Deposit the waste fiber in a trash container.

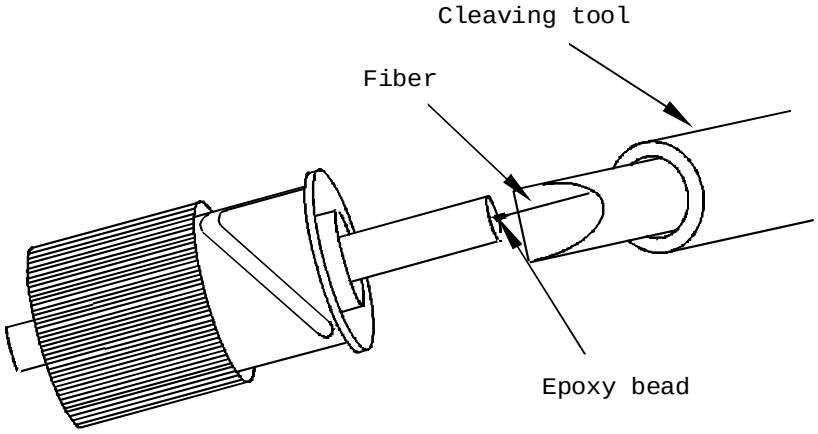

FIGURE 5B1-13. Scoring the fiber.

Step 2 - Clean the glass polishing plate, the resilient pad, the backs of the polishing papers, and the surface of the polishing tool using a wipe dampened with alcohol. Blow all of the surfaces dry with air.

NOTE: Before inserting the connector into the polishing tool, the connector may be held vertically and the end of the fiber polished off by lightly running the 5 um polishing paper over the top of the ferrule tip. (This is referred to as air polishing the connector.)

Step 3 - Insert the connector into the polishing tool (see figure 5B1-14). (NOTE: Difficulty in inserting the connector ferrule into the polishing tool may indicate epoxy on outside of the ferrule, which must be removed before proceeding.)

Source: https://assist.dla.mil -- Downloaded: 2016-12-10T08:03Z
Check the source to verify that this is the current version before use.

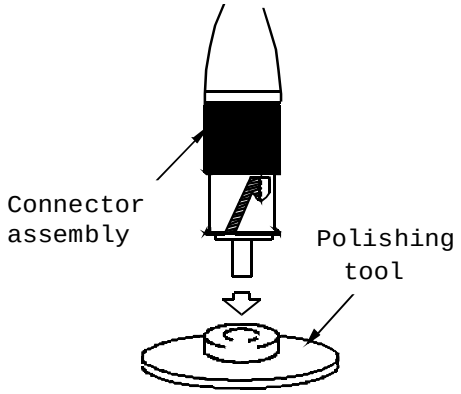

FIGURE 5B1-14. Inserting the connector into the polishing tool.

Step 4 - Place the 5 um polishing paper on the glass plate and start polishing the connector with very light pressure (the weight of the tool) using a figure-8 motion (see figure 5B1-15). Do not overpolish the connector. (NOTE: The first polish is complete when all of the epoxy is almost gone from the tip of the ferrule.) Since the polishing time varies with the amount of epoxy present on the tip of the ferrule, inspect the ferrule tip frequently. Whenever the polishing tool is lifted, remove the grit from the tool and the ferrule using a wipe dampened with alcohol or with air. When polishing is complete, clean the ferrule and the polishing tool using a wipe dampened with alcohol and blow them dry with air. Perform a rough inspection of the ferrule end using the eye loop.

Step 5 - Place the resilient pad on the glass plate. Place the 1 um paper on the resilient pad. Wet the paper and polish the connector with no pressure using a figure-8 motion for approximately 10 complete motions.

NOTE: The polish tool should hydroplane above the paper surface during this polish.

NOTE: The 1 um polish is complete when all of the epoxy is gone from the tip of the terminus.

NOTE: The 1 um polish may also be performed using dry paper.

Step 6 - Replace the 1 um paper with the 0.1 um paper. Wet the paper and polish the connector with no pressure using a figure-8 motion for approximately 20 to 30 complete motions.

NOTE: The polish tool should hydroplane above the paper surface during this polish.

Step 7 - Remove the connector from the polishing tool, and clean it using a wipe dampened with alcohol and blow it dry with air.

3.2.4.2.2 Enhanced procedure. This procedure will produce a connector with a domed end polish. This procedure is typically used for single mode applications with a minimum return loss requirement of 40 dB, or when specified in the contract. Procedures for hand polishing are contained herein. Machine polishing may be used as an alternate method, provided the following requirements are satisfied:

Source: https://assist.dla.mil -- Downloaded: 2016-12-10T08:03Z
Check the source to verify that this is the current version before use.

a. The manufacturer's instructions will be rigidly adhered to, except that the polishing papers or disks shall be 5 um aluminum oxide foam backed, 1 um aluminum oxide mylar backed, 0.1 um diamond mylar backed, and ultrafine mylar backed as used in hand polishing. (NOTE: Alternate polishing materials may be used if authorized approval is obtained and the polishing machine includes the appropriate stops to prevent changes to the ferrule length.)

b. The machine polished connector shall undergo the same quality check used for the manually polished connector as described herein.

NOTE: The procedures contained herein should produce an optical terminus with a physical contact (PC) polish.

Step 1 - Perform steps 1 through 7 of the standard polish procedure.

Step 2 - Replace the 0.1 um paper with the ultrafine paper. Wet the paper and polish the terminus with light pressure using a figure-8 motion for 10 to 30 complete motions.

NOTE: The glossy side of the ultrafine paper should be placed facing the resilient pad.

NOTE: The polish tool should hydroplane above the paper surface during this polish.

Step 3 - Remove the connector from the polishing tool, clean it using a wipe dampened with alcohol and blow it dry with air.

3.2.5 Quality check.

Step 1 - Examine the connector with the optical microscope to ensure that the optical surface is smooth and free of scratches, pits, chips, and fractures (see figure 5B1-15). If any defects are present, repeat the polish with the 0.1 um paper (and the ultrafine paper for enhanced polish connectors) or reterminate the fiber. (NOTE: Do not polish the connector more than necessary to pass the quality check.) A high intensity back light may be used to illuminate the fiber during the quality check.

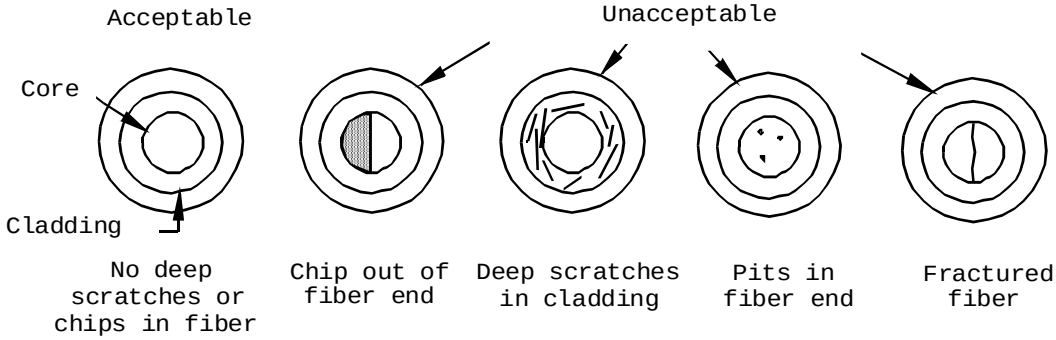

FIGURE 5B1-15. Quality check.

NOTE: Depending on the optical microscope used, viewing quality may be different.

Source: https://assist.dla.mil -- Downloaded: 2016-12-10T08:03Z
Check the source to verify that this is the current version before use.

NOTE: A small number of very light scratches (e.g. scratches that can barely be seen) is minimally acceptable.

Step 2 - If the connector is not to be immediately mated into an adapter, install a plastic protective cap over the connector ferrule.

Source: https://assist.dla.mil -- Downloaded: 2016-12-10T08:03Z
Check the source to verify that this is the current version before use.

METHOD 5C1

MECHANICAL SPLICE FERRULE INSTALLATION

1. SCOPE.

1.1 Scope. This method describes a procedure for installing a MIL-S-24623/4 mechanical splice ferrule onto an OFCC.

NOTE: The MIL-PRF-24623/4 splice is a commercial based fiber splice commonly called a rotary mechanical splice. However, all commercial rotary mechanical splices are not compatible with the MIL-S-24623/4 splice. Only commercial rotary mechanical splices with ferrule diameters between 2.4996 mm and 2.5006 mm (AT&T letter code "M") are compatible with the MIL-S-24623/4 splice.

NOTE: The MIL-PRF-24623/4 splice is no longer in production.

2. REQUIRED EQUIPMENT AND MATERIALS.

2.1 The equipment and materials in table 5C1-I shall be used to perform this procedure:

TABLE 5C1-I. Equipment and materials.

Description	Quantity
Wipes (NAVSEA DWG 6872812-18 or equal)	As required
Alcohol bottle with alcohol/2-propanol (sealable type)	1
Canned air or compressed air	As required
OFCC strip tool (NAVSEA DWG 6872812-10 or equal)	1
Kevlar shears (NAVSEA DWG 6872812-16 or equal)	1
UV absorbing safety glasses	1
Buffer strip tool (NAVSEA DWG 6872812-9 or equal)	1
UV cure adhesive (MIL-PRF-24793)	As required
Dispensing needles (NAVSEA DWG 6872812-22 or equal)	As required
UV blocking shield	As required
UV curing lamp and base (NAVSEA DWG 6872812-13 or equal)	1
Cleaver (NAVSEA DWG 6872812-7 or equal)	1
Utility knife	1
Glass polishing plate (NAVSEA DWG 6872812-3 or equal)	1

Source: https://assist.dla.mil -- Downloaded: 2016-12-10T08:03Z
Check the source to verify that this is the current version before use.

TABLE 5C1-I. Equipment and materials - continued.

Description	Quantity
Polishing paper, 8 um, aluminum oxide, paper backed (NAVSEA DWG 6872812-19 or equal)	As required
Polishing paper, 0.3 um, aluminum oxide, paper backed (NAVSEA DWG 6872812-20 or equal)	As required
Polishing tool (NAVSEA DWG 6872812-4 or equal)	1
Water bottle (sealable type)	1
7x eye loupe	1
Protective caps (plastic)	As required

CAUTION: Throughout the termination process, cleanliness is critical to obtaining a high optical quality splice. Make sure that your hands and the work area are as clean as possible to minimize the ingress of dirt into the splice.

NOTE: Verify that the adhesive and index matching material shelf life has not expired. Do not use adhesive or index matching material with an expiration date that has passed.

3. PROCEDURE.

3.1 Safety summary. The following safety precautions shall be observed:

a. Safety glasses shall be worn at all times when handling bare fibers or dispensing adhesive.

b. Do not touch the ends of the fiber as they may be razor sharp. Wash your hands after handling bare fiber.

c. Avoid skin contact with adhesives.

d. When visually inspecting an optical fiber, never stare into the end of a fiber connected to a laser source or LED.

e. Ultraviolet (UV) safety glasses shall be worn when using the UV curing lamp.

3.2 Procedure.

3.2.1 Cable and fiber preparation.

NOTE: If the cable jacket has not been removed, refer to Method 2A1 and Method 2B1 of Part 2 of this standard practice.

NOTE: Keep the OFCCs and splice parts free from oil, dirt and grease throughout the installation procedure. If cleaning is necessary, use a wipe dampened with alcohol and blow the part dry with air.

Source: https://assist.dla.mil -- Downloaded: 2016-12-10T08:03Z
Check the source to verify that this is the current version before use.

NOTE: This procedure utilizes heat shrink tubing (with identification markings) for the identification of individual OFCCs. Other permanent methods of identification may be used with authorized approval.

Step 1 - Measure the OFCCs to the required length (refer to the equipment drawings or to Method 2C1 of Part 2 of this standard practice). Then add sufficient slack to allow for at least two reterminations [40 mm (1.60 in) of slack should be sufficient for one retermination].

Step 2 - Slip the heat shrink tubing with the fiber identification over the OFCC.

Step 3 - Measure the distance from the expected splice position in the splice tray to the last OFCC tie down location, subtract approximately 60 mm (2.4 in) and mark the OFCC jacket. Using the OFCC stripper, remove the OFCC jacket back to the mark.

NOTE: The optimum way to remove the OFCC jackets is to ring cut the jacket with the OFCC stripper and pull the jacket off by hand. Pushing off the OFCC jacket with a tightly held OFCC stripper can lead to fiber breakage.

Step 4 - Separate the kevlar strands from the buffered fiber and, using the kevlar shears, trim the strands back to the OFCC jacket edge.

Step 5 - WARNING: Wear safety glasses when removing the fiber buffer and coating to avoid possible eye injury.

Mark the fiber buffer 30 mm (1.20 in) back from the end of the fiber, and remove the fiber buffer and coating back to the mark using the buffer stripper. Remove the buffer and coating in small sections (approximately 6 mm (0.25 in) at a time.) (NOTE: Normally, the buffer and coating are tightly adhered to one another and come off of the fiber at the same time.)

NOTE: An exposed fiber length less than 30 mm (1.20 in) may be used.

Step 6 - CAUTION: The uncoated fiber is in its most vulnerable state. Take extreme care not to damage the fiber.

Remove any residual coating material from the bare fiber with a wipe dampened with alcohol. Wipe only once from the end of the buffer towards the end of the fiber. (NOTE: Do not repeatedly wipe the bare fiber as this will weaken the fiber.)

3.2.2 Installation of the ferrules onto the fibers.

Step 1 - Separate the ferrules by grasping both sides of an assembled ferrule pair with the thumb and index fingers. Simultaneously pull and slightly bend the ferrules until they separate. (NOTE: Do not twist the ferrules during separation.)

NOTE: If the ferrules are already separated and matching ferrule sets are not obvious, inspect the ferrules to verify that all of the ferrules are MIL-PRF-24623/4 ferrules. Unmatched ferrules can be mated with no reduction in optical performance only if the ferrules are MIL-PRF-24623/4.

Step 2 - Install the syringe tip on the UV adhesive syringe.

Source: https://assist.dla.mil -- Downloaded: 2016-12-10T08:03Z
Check the source to verify that this is the current version before use.

Step 3 - Cover the entire ferrule assembly with a UV blocking shield if the splicing procedure will be performed in direct or bright sunlight or under bright fluorescent lamps (NOTE: Normal ship lighting is not bright enough to cause the UV adhesive to cure prematurely.)

Step 4 - WARNING: Wear safety glasses when dispensing epoxy to avoid possible eye injury.

Insert the tip of the syringe into rear of the splice ferrule until the syringe tip bottoms out. Slowly inject adhesive into the ferrule until a very small bead appears on the ferrule tip (see figure 5C1-1). (NOTE: Be extremely careful not to get adhesive on the splice spring or other splice moving parts.)

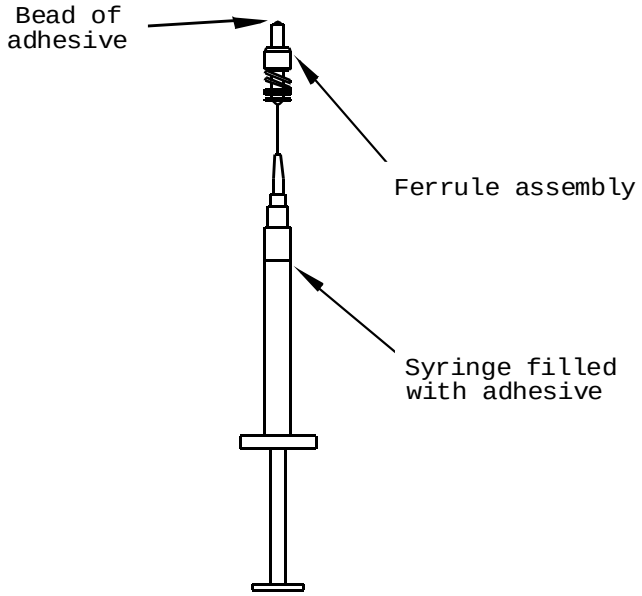

FIGURE 5C1-1. Injecting adhesive into the ferrule.

Step 5 - Withdraw the syringe from the splice. Maintain some pressure on the plunger as the syringe is withdrawn so that the splice is completely filled with adhesive. Using a wipe dampened with alcohol, wipe away any adhesive on the outer diameter of the ferrule without disturbing the ferrule end. Place the syringe under a UV blocking shield or wipe.

Step 6 - Carefully insert the stripped fiber into the ferrule until the buffer bottoms out (see figure 5C1-2). Once inserted, do not allow the fiber to slip back.

Source: https://assist.dla.mil -- Downloaded: 2016-12-10T08:03Z
Check the source to verify that this is the current version before use.

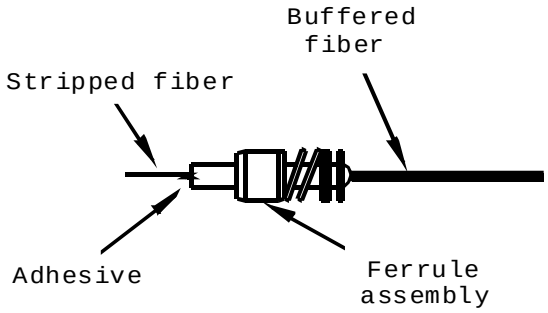

FIGURE 5C1-2. Inserting the fiber into the ferrule.

Step 7 - Verify that there is a small amount of adhesive around the fiber where it protrudes from the ferrule. If it is found that there is no small bead of adhesive on the ferrule tip, carefully add a small amount of adhesive around the fiber. (NOTE: There should only be a small amount of adhesive around the fiber to support it later during the polishing process.)

Step 8 - Using a wipe dampened with alcohol, carefully wipe away any adhesive on the fiber that is more than 2 mm (0.1 in) from the ferrule surface.

3.2.3 Curing the adhesive.

Step 1 - Remove the UV blocking shield, if it was used.

Step 2 - Place the prepared ferrule on the curing lamp base. Position the UV curing lamp over the ferrule (see figure 5C1-3). Do not allow the ferrule to slide forward off of the fiber buffer. (NOTE: If possible, tape the OFCCs and the buffered fiber to any available surface during the curing period to avoid accidentally pulling the fibers out of the ferrules or the ferrules out from under the curing lamp.)

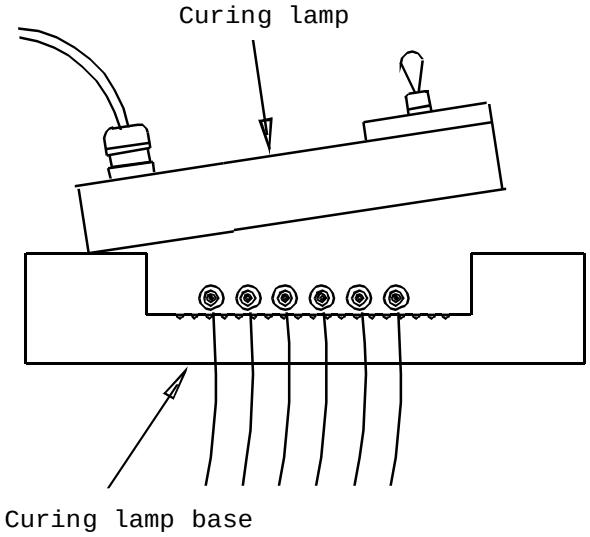

FIGURE 5C1-3. Positioning the curing lamp.

Source: https://assist.dla.mil -- Downloaded: 2016-12-10T08:03Z
Check the source to verify that this is the current version before use.

Step 3 - WARNING: Wear UV safety glasses when using the curing lamp to avoid possible eye injury.

Turn on the curing lamp and cure the ferrules for a minimum of 2 minutes (maximum of 7 minutes).

Step 4 - Turn off the curing lamp and lift it off the curing lamp base. Remove the cured ferrules from curing lamp base.

3.2.4 Polishing the fiber ends. Procedures for hand polishing are contained herein. Machine polishing may be used as an alternate method, provided the following requirements are satisfied:

a. The manufacturer's instructions will be rigidly adhered to, except that the polishing papers or disks shall be 8 um paper backed and 0.3 um paper backed, as used in hand polishing. (NOTE: Alternate polishing materials may be used if authorized approval is obtained from the contracting activity.)

b. The machine polished ferrule shall undergo the same quality check used for the manually polished ferrule as described herein.

Step 1 - WARNING: Wear safety glasses when scoring the fiber to avoid possible eye injury.

Score the fiber close to the ferrule tip at the epoxy interface using one short light stroke with cleaving tool (see figure 5C1-4). (NOTE: Do not break the fiber with the cleaving tool.) Pull off the fiber with a gentle, straight pull. Deposit the waste fiber in a trash container.

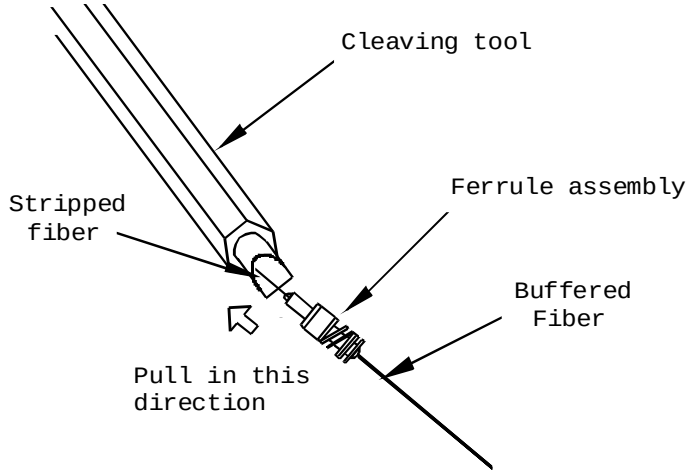

FIGURE 5C1-4. Scoring the fiber.

Step 2 - Remove any adhesive on the cylindrical surface of the ferrule using a utility knife. Move the knife from the back to the front of the ferrule using a light force and a shallow working angle (see figure 5C1-5). (NOTE: Be careful not to scratch the ferrule end.)

Source: https://assist.dla.mil -- Downloaded: 2016-12-10T08:03Z
Check the source to verify that this is the current version before use.

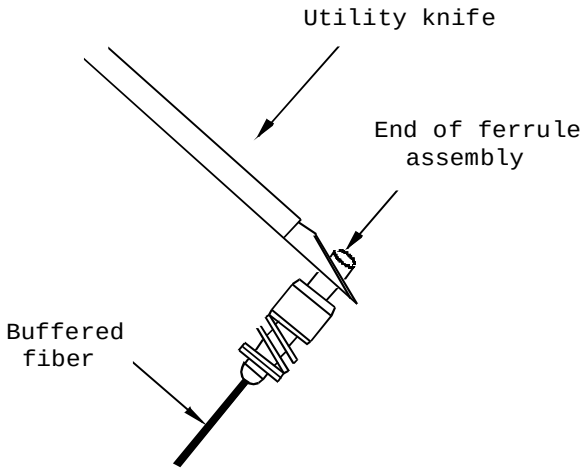

FIGURE 5C1-5. Removing the excess adhesive.

Step 3 - Clean the glass polishing plate, the backs of the polishing papers, and the surface of the polishing tool using a wipe dampened with alcohol. Blow all of the surfaces dry with air.

Step 4 - Insert the ferrule into the polishing tool.

Step 5 - Place the 8 um polishing paper on the glass plate. Wet the paper and start polishing the ferrule with very light pressure (the weight of the tool) using a figure-8 motion (see figure 5C1-6). Polish the ferrule until the adhesive is gone and the ferrule surface is unmarked. Since the polishing time varies with the amount of adhesive present on the tip of the ferrule and the ferrule end condition, inspect the ferrule tip frequently using the eye loupe. Whenever the polishing tool is lifted, remove the grit from the tool and the ferrule with a wipe dampened with alcohol and blow dry with air.

Source: https://assist.dla.mil -- Downloaded: 2016-12-10T08:03Z
Check the source to verify that this is the current version before use.

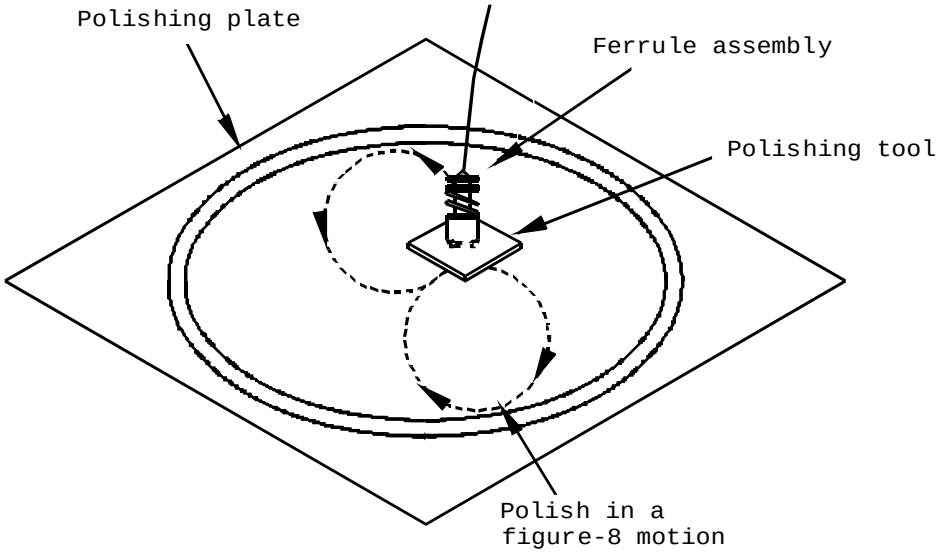

FIGURE 5C1-6. Polishing the ferrule.

Step 6 - Replace the 8 um paper with the 0.3 um paper. Wet the paper and polish the connector with very light pressure using a figure-8 motion for 5 to 10 complete motions.

NOTE: Do not over polish; 10 figure-8's should be adequate.

Step 7 - Remove the ferrule from the tool and clean both with a wipe dampened with alcohol and blow dry with air.

3.2.5 Quality check.

Step 1 - Examine the ferrule with the eye loupe to ensure that the optical surface is smooth and free of scratches, pits, chips, and fractures (see figure 5C1-7). If any defects are present, repeat steps 3, 4, 6 and 7 or reterminate the fiber. (NOTE: Overpolishing the fiber will increase the optical loss of the splice. Do not polish the ferrule more than necessary to pass the quality check.)

Source: https://assist.dla.mil -- Downloaded: 2016-12-10T08:03Z
Check the source to verify that this is the current version before use.

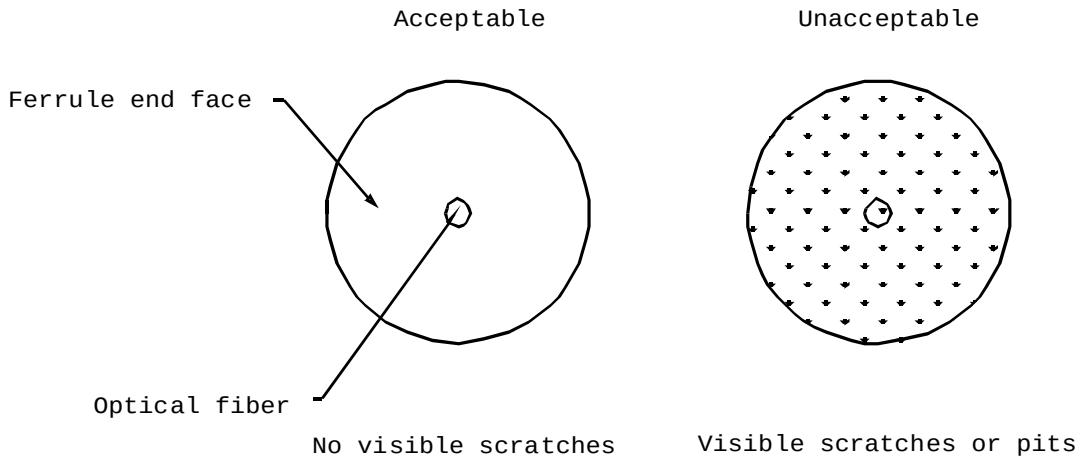

FIGURE 5C1-7. Quality check.

Step 2 - If the splice is not to be immediately mated in an alignment clip, install a plastic protective cap over the splice ferrule.

Source: https://assist.dla.mil -- Downloaded: 2016-12-10T08:03Z
Check the source to verify that this is the current version before use.

STANDARDIZATION DOCUMENT IMPROVEMENT PROPOSAL

INSTRUCTIONS

1. The preparing activity must complete blocks 1, 2, 3, and 8. In block 1, both the document number and revision letter should be given.

2. The submitter of this form must complete blocks 4, 5, 6, and 7.

3. The preparing activity must provide a reply within 30 days from receipt of the form.

NOTE: This form may not be used to request copies of documents, nor to request waivers, or clarification of requirements on current contracts. Comments submitted on this form do not constitute or imply authorization to waive any portion of the referenced document(s) or to amend contractual requirements.

I RECOMMEND A CHANGE:	**1. DOCUMENT NUMBER** MIL-STD-2042-5	**2. DOCUMENT DATE (YYMMDD)**

3. DOCUMENT TITLE FIBER OPTIC CABLE TOPOLOGY INSTALLATION STANDARD METHODS FOR NAVAL SHIPS (CONNECTORS AND INTERCONNECTIONS)

4. NATURE OF CHANGE (Identify paragraph number and include proposed rewrite, if possible. Attach extra sheets as needed.)

5. REASON FOR RECOMMENDATION

6. SUBMITTER

a. NAME (Last, First, Middle initial)	b. ORGANIZATION	
c. ADDRESS (Include Zip Code)	d. TELEPHONE (Include Area Code) (1) Commercial (2) AUTOVON (If applicable)	7. DATE SUBMITTED (YYMMDD)

8. PREPARING ACTIVITY

a. NAME Ruth Butler	b. TELEPHONE (Include Area Code) (1) Commercial (202) 781-3726 (2) AUTOVON 326-3726
c. ADDRESS (Include Zip Code) Commander, Naval Sea Systems Command ATTN: SEA 05Q 1333 Isaac Hull Avenue Southeast, Stop 5160 Washington Navy Yard, DC 20376-5160	**IF YOU DO NOT RECEIVE A REPLY WITHIN 45 DAYS, CONTACT:** Defense Standardization Program Office (DLSC-LM) 8725 John J. Kingman Road, Suite 2533 Fort Belvoir, Virginia 22060-6221 Telephone (703) 767-6888 DSN 427-6888

Source: https://assist.dla.mil -- Downloaded: 2016-12-10T08:03Z
Check the source to verify that this is the current version before use.