INCH-POUND

MIL-PRF-83401G
18 March 1996
SUPERSEDING
MIL-PRF-83401F
9 October 1989

PERFORMANCE SPECIFICATION

RESISTOR NETWORKS, FIXED, FILM, AND CAPACITOR-RESISTOR NETWORKS, CERAMIC CAPACITOR AND FIXED FILM RESISTORS, GENERAL SPECIFICATION FOR

This specification is approved for use by all Departments and Agencies of the Department of Defense.

1. SCOPE

1.1 Scope. This specification covers the general requirements for hermetically sealed (see 3.10) and nonhermetically sealed networks. These networks consist entirely of fixed, film resistors or, fixed film resistors and ceramic capacitors. They are primary intended for use in electronic circuits. This specification has two product levels, a high reliability, 100 percent burn-in screened "M" part number level and nonburn-in screened part number level "C" (see 1.2.1).

1.2 Classification.

1.2.1 Part or Identifying Number (PIN). Networks specified herein (see 3.1) will be identified by a PIN which will consist of the basic number of the associated specification and coded number. Each associated specification covers a different network style. The number will be coded to provide information concerning the level of burn-in screening of the network, characteristic, resistance value, resistance tolerance, and schematic. The PIN will be in the following form with a coded number derived as indicated:

100 percent burn-in screened network ("M" part number).

M8340101	H	1002	J	A
Associated specification number (indicating MIL-PRF-83401/01)	Characteristic (see 1.2.1.1)	Resistance (see 1.2.1.2)	Resistance tolerance (see 1.2.1.3)	Schematic (see 1.2.1.4 and 3.1)

Nonburn-in screened network ("C" part number).

C8340101	H	1002	J	A
Associated specification number (indicating MIL-PRF-83401/01)	Characteristic (see 1.2.1.1)	Resistance (see 1.2.1.2)	Resistance tolerance (see 1.2.1.3)	Schematic (see 1.2.1.4 and 3.1)

Beneficial comments (recommendations, additions, deletions) and any pertinent data which may be of use in improving this document should be addressed to: DESC-ELDM, 1507 Wilmington Pike, Dayton, OH 45444-5765 by using the Standardization Document Improvement Proposal (DD Form 1426) appearing at the end of this document or by letter.

AMSC N/A FSC 59GP

DISTRIBUTION STATEMENT A. Approved for public release; distribution is unlimited.

Source: https://assist.dla.mil -- Downloaded: 2016-11-25T17:09Z
Check the source to verify that this is the current version before use.

1.2.1.1 Characteristics. The characteristics are identified by the single letters C, H, K, M, R, V, or Y in accordance with table I.

TABLE I. Characteristics.

Test or condition		Characteristics							Units
		Y 1/	C 1/	V 2/	H 2/	K 2/	M 1/	R 2/	
Resistance temperature characteristic (see 3.13)		±5	±50	±50	±50	±100	±300	±25	PPM/°C
Tracking to the reference element		±5 3/	±5 3/	±5 3/	4/	4/	4/	±5 3/	
Maximum ambient temperature at rated wattage (see 3.5)		70	70	70	70	70	70	70	°C
Maximum ambient temperature at zero power derating (see figure 2)		125	125	125	125	125	125	125	
Thermal shock (see 3.7) and Power conditioning (see 3.8)	ΔR	±.02	±.25	±.25	±.50	±.70	±.70	±.08	Maximum percent change in resistance (0.01 ohm additional allowed for measurement error) and, when applicable, maximum percent change in resistance ratio.
	ΔRatio	±.01	±.03	±.03	4/	4/	4/	±.04	
Low temperature operation (see 3.14)	ΔR	±.01	±.10	±.10	±.10	±.25	±.50	±.03	
	ΔRatio	±.01	±.02	±.02	4/	4/	4/	±.02	
Short time overload (see 3.15)	ΔR	±.02	±.10	±.10	±.10	±.25	±.50	±.03	
	ΔRatio	±.01	±.02	±.02	4/	4/	4/	±.02	
Terminal strength (see 3.16)	ΔR	±.01	±.10	±.10	±.25	±.25	±.25	±.03	
	ΔRatio	±.01	±.03	±.03	4/	4/	4/	±.02	
Resistance to soldering heat (see 3.19)	ΔR	±.01	±.10	±.10	±.10	±.25	±.25	±.05	
	ΔRatio	±.01	±.02	±.02	4/	4/	4/	±.02	
Moisture resistance (see 3.20)	ΔR	±.01	±.20	±.20	±.40	±.50	±.50	±.05	
	ΔRatio	±.01	±.02	±.02	4/	4/	4/	±.02	
Shock, specified pulse (see 3.21)	ΔR	±.01	±.25	±.25	±.25	±.25	±.25	±.03	
	ΔRatio	±.01	±.03	±.03	4/	4/	4/	±.02	
Vibration, high frequency (see 3.22)	ΔR	±.01	±.25	±.25	±.25	±.25	±.25	±.03	
	ΔRatio	±.01	±.03	±.03	4/	4/	4/	±.02	
Life (see 3.23)	ΔR	±.05	±.10	±.10	±.50	±.50	±2.0	±.10	
	ΔRatio	±.025	±.03	±.03	4/	4/	4/	±.03	
Power rating at 25°C (see 3.23.1)	ΔR	±.05	±.10	±.10	±.50	±.50	±2.0	±.10	
	ΔRatio	±.025	±.03	±.03	4/	4/	4/	±.03	
High temperature exposure (see 3.24)	ΔR	±.01	±.10	±.10	±.20	±.50	±1.0	±.05	
	ΔRatio	±.01	±.03	±.03	4/	4/	4/	±.02	
Low temperature storage (see 3.25)	ΔR	±.01	±.10	±.10	±.10	±.25	±.50	±.03	
	ΔRatio	±.01	±.02	±.02	4/	4/	4/	±.02	
Insulation resistance (see 3.18)		10,000	10,000	10,000	10,000	10,000	10,000	10,000	Megohms
Resistance, tolerance and, when applicable, resistance ratio accuracy 3/		.005(V) .01(T) .05(A) .1 (B) .5 (D) 1.0 (F)	.1 (B) .5 (D) 1.0 (F)	.1 (B) .5 (D) 1.0 (F)	.1 (B) .5 (D) 1.0 (F)	.5 (D) 1.0 (F) 2.0 (G) 5.0 (J)	1.0(F) 2.0(G) 5.0(J)	.05(A) .1 (B) .5 (D)	± Percent

1/ Hermetically sealed resistor network will conform to the requirement specified in 3.10. These units may be furnished to meet characteristic H, K, M, and V requirements.

2/ Nonhermetically sealed resistor networks are those not meeting the requirement of 3.10.1. Characteristic H, K, M, R, or V will not be furnished against C requirements.

3/ See 3.9.3.

4/ Not applicable.

Source: https://assist.dla.mil -- Downloaded: 2016-11-25T17:09Z
Check the source to verify that this is the current version before use.

1.2.1.2 Resistance.

1.2.1.2.1 Four digit resistance designation (all resistor values equal). The four digit resistance designation is applicable to all resistance tolerances. The nominal resistance is identified by four digits; the first three digits represent significant figures and the last digit specifies the number of zeros to follows. When the value of resistance is less than 100 ohms, or when fractional values of an ohm is required, the "R" will be substituted for one of the significant digits to represent the decimal point. When the letter "R" is used, succeeding digits of the group represent significant figures. The resistance values designations are shown in tables II. Standard values for every decade will follow the sequence demonstrated for "10 to 100" decade in table III. Resistance values not listed in table III for the appropriate resistance tolerance will be considered as not conforming to the specification. The resistance values for tolerances V, T, A and B may be any value within the limits specified in 3.1, but it is preferred that values be chosen from the "B (0.1)" and "D (0.5)" columns of table III.

Although resistance tolerances "G" and "J" normally require less than three significant figures to adequately describe the true resistance value, for the purpose of this specification, the nominal value will be three significant figures followed by the fourth digit to signify the number of zeros to follow.

1.2.1.2.2 Three digit resistance designation (all resistor values equal) (inactive for new design). The three digit resistance designation is applicable to tolerances G (±2.0 percent) and J (±5.0 percent). The nominal resistance expressed in ohms is identified by three digits; the first two digits represent significant figures and the last digit specifies the number of zeros to follow. When the value of resistance is less than 10 ohms, or when fractional values of an ohm are required, the letter "R" will be substituted for one of the significant digits to represent the decimal point. When the letter "R" is used, succeeding digits of the group represent significant figures. The resistance value designations are shown in table IV. The standard values for every decade will follow the sequence demonstrated for the "10 to 100" decade in table III. The three digit resistance designation is for Army and Air Force use only.

TABLE II. Designation of resistance values for resistance tolerance of 0.10, 0.50, 1.0, 2.0, and 5.0 percent.

Designation	Resistance ohms
1R00 to 9R88 incl.	1.00 to 9.88 incl.
10R0 to 98R8 incl.	10.0 to 98.8 incl.
1000 to 9880 incl.	100 to 988 incl.
1001 to 9881 incl.	1,000 to 9,880 incl.
1002 to 9882 incl.	10,000 to 98,800 incl.
1003 to 9883 incl.	100,000 to 988,000 incl.
1004 to 9884 incl.	1,000,000 to 9,880,000 incl.

Source: https://assist.dla.mil -- Downloaded: 2016-11-25T17:09Z
Check the source to verify that this is the current version before use.

TABLE III. Standard resistance values for the 10 to 100 decade. 1/

(B) (D)	(F)	(G) (J)	(B) (D)	(F)	(G) (J)	(B) (D)	(F)	(G) (J)	(B) (D)	(F)	(G) (J)
10.00	10.00	10.00	18.40			33.20	33.20		58.30		
10.10			18.70	18.70		33.60			59.00	59.00	
10.20	10.20		18.90			34.00	34.00		59.70		
10.40			19.10	19.10		34.40			60.40	60.40	
10.50	10.50		19.30			34.80	34.80		61.20		
10.60			19.60	19.60		35.20			61.90	61.90	
10.70	10.70		19.80			35.70	35.70				62.00
10.90			20.00	20.00	20.00			36.00	62.60		
11.00	11.00		20.30			36.10			63.40	63.40	
11.10			20.50	20.50		36.50	36.50		64.20		
11.30	11.30	11.00	20.80			37.00			64.90	64.90	
11.40			21.00	21.00		37.40	37.40		65.70		
11.50	11.50		21.30			37.90			66.50	66.50	
11.70			21.50	21.50		38.30	38.30		67.30		
11.80	11.80		21.80			38.80					68.00
12.00	12.00 2/	12.00			22.00			39.00	68.10	68.10	
12.10	12.10		22.10	22.10		39.20	39.20		69.00		
12.30			22.30			39.70			69.80	69.80	
12.40	12.40		22.60	22.60		40.20	40.20		70.60		
12.60			22.90			40.70			71.50	71.50	
12.70	12.70		23.20	23.20		41.20	41.20		72.30		
12.90			23.40			41.70			73.20	73.20	
13.00	13.00	13.00	23.70	23.70		42.20	42.20		74.10		
13.20			24.00		24.00	42.70			75.00	75.00	75.00
13.30	13.30		24.30	24.30				43.00	75.90		
13.50			24.60			43.20	43.20		76.80	76.80	
13.70	13.70		24.90	24.90		43.70			77.70		
13.80			25.20			44.20	44.20		78.70	78.70	
14.00	14.00		25.50	25.50		44.80			79.60		
14.20			25.80			45.30	45.30		80.60	80.60	
14.30	14.30		26.10	26.10		45.90			81.60		
14.50			26.40			46.40	46.40				82.00
14.70	14.70		26.70	26.70		47.00	47.00 2/	47.00	82.50	82.50	
14.90					27.00	47.50	47.50		83.50		
15.00	15.00	15.00	27.10			48.10			84.50	84.50	
15.20			27.40	27.40		48.70	48.70		85.60		
15.40	15.40		27.70			49.30			86.60	86.60	
15.60			28.00	28.00		49.90	49.90		88.70	88.70	
15.80	15.80		28.40			50.50			89.80		
16.00	16.00 2/	16.00	28.70	28.70				51.00	90.90	90.90	
16.20	16.20		29.10			51.10	51.10				91.00
16.40			29.40	29.40		51.70			92.00	93.10	
16.50	16.50		29.80			52.30	52.30		93.10		
16.70					30.00	53.00			94.20	95.30	
16.90	16.90		30.10	30.10		53.60	53.60		95.30		
17.20			30.50			54.20			96.50	97.60	
17.40	17.40		30.90	30.90		54.90	54.90		97.60		
17.60			31.20			55.60			98.80		
17.80	17.80		31.60	31.60				56.00			
18.00		18.00	32.00			56.20	56.20				
18.20	18.20		32.40	32.40		56.90					
			32.80			57.60	57.60				
					33.00						

1/ Resistance values not listed in table III for the appropriate resistance tolerance will be considered as not conforming to the specification. The resistance values for tolerances V, T, A, and B may be any value within the limits specified in 3.1, but it is preferred that values be chosen from "B" and "D" column of table III.

2/ Inactive for new design after 9 March 1987.

Source: https://assist.dla.mil -- Downloaded: 2016-11-25T17:09Z
Check the source to verify that this is the current version before use.

1.2.1.2.3 Resistance designation for network schematics H, J, N, and X. For network schematics H, J, N, and X, the four digit resistance designation becomes a code indicator with the first digit being an "A" and the following three digits a code number indicating a resistance combination described in the applicable associated specification.

TABLE IV. Designator of resistance values for resistance tolerances of 2.0 and 5.0 percent. 1/ 2/

Designator	Resistance ohms
5R1to 9R1 incl.	5.1 to 9.1 incl.
100 to 910 incl.	10 to 91.0 incl.
101 to 911 incl.	100 to 910 incl.
102 to 912 incl.	1,000 to 9,180 incl.
103 to 913 incl.	10,000 to 91,800 incl.
104 to 914 incl.	100,000 to 910,000 incl.

1/ Three digit resistance designation is inactive for new design.
2/ Three digit resistance designation is for Army and Air Force use only.

1.2.1.3 Resistance and ratio tolerance. The resistance and ratio tolerance is identified by a single letter in accordance with table V.

TABLE V. Resistance and ratio tolerance.

Symbol	Resistance tolerance percent	Ratio tolerance percent	Applicable characteristic
V	0.005	0.005	Y
T	0.01	0.01	Y
A	0.05	0.05	R, Y
B	0.1	0.1	C, V, R, Y
D	0.5	0.1	C, V, R, Y
F	1.0	0.5	C, V, R, Y
G	2.0		
J	5.0		
X 1/			

1/ The X tolerance will be as specified in the associated specification.

1.2.1.4 Schematic. The network schematic will be identified by a single letter in accordance with figure 1, and as specified (see 3.1). Dotted lines in the schematics refer to configurations that might have additional resistors.

1.2.1.5 Schematic "X". Additional special schematics may be identified as "X" schematics and described fully in the associated specification. See figure 1 for schematic "X" method of presentation.

Source: https://assist.dla.mil -- Downloaded: 2016-11-25T17:09Z
Check the source to verify that this is the current version before use.

1.2.2 Style. The style is identified by the two-letter symbol "RZ" followed by a three-digit number (see 3.1). The letters identify fixed resistor networks and the three digits represent envelope size and configuration.

2. APPLICABLE DOCUMENTS

2.1 General. The documents listed in this section are specified in sections 3, 4, and 5 of this specification. This section does not include documents cited in other sections of this specification or recommended for additional information or as samples. While every effort has been made to ensure the completeness of this list, document users are cautioned that they must meet all specified requirements documents cited in sections 3, 4, and 5 of this specification, whether or not they are listed.

2.2 Government documents.

2.2.1 Specifications, standards, and handbooks. The following specifications, standards, and handbooks form a part of this document to the extent specified herein. Unless otherwise specified, the issues of these documents are those listed in the issue of the Department of Defense Index of Specifications and Standards (DoDISS) and supplement thereto, cited in the solicitation (see 6.2).

SPECIFICATIONS

DEPARTMENT OF DEFENSE

(See supplement 1 for list of associated specifications.)

STANDARDS

DEPARTMENT OF DEFENSE

MIL-STD-202 - Test Methods for Electronic and Electrical Components Parts.
MIL-STD-810 - Environmental Test Methods.
MIL-STD-1276 - Leads for Electronic Component Parts.
MIL-STD-1285 - Marking of Electrical and Electronic Parts.

(Unless otherwise indicated, copies of the above specifications, standards, and handbooks are available from the Standardization Document Order Desk, Building 4D, 700 Robbins Avenue, Philadelphia, PA 19111-5094.)

2.3 Non-Government publications. The following documents form a part of this document to the extent specified herein. Unless otherwise specified, the issues of the documents which are DoD adopted are those listed in the issue of the DoDISS cited in the solicitation. Unless otherwise specified, the issues of documents not listed in the DoDISS are the issues of the documents cited in the solicitation (see 6.2).

AMERICAN NATIONAL STANDARDS INSTITUTE (ANSI)

ANSI/NCSL Z540-1 - Calibration Laboratory and Measuring and Test Equipment, General Requirements for.

Source: https://assist.dla.mil -- Downloaded: 2016-11-25T17:09Z
Check the source to verify that this is the current version before use.

(Application for copies should be addressed to the American National Standards Institute, 11 West 42nd Street, New York, NY 10036.)

AMERICAN SOCIETY FOR TESTING AND MATERIALS (ASTM)

ASTM B545 - Tin, Electrodeposited Coatings of.

(Application for copies should be addressed to the American Society for Testing and Materials, 1916 Race Street, Philadelphia, PA 19103.)

INTERNATIONAL ORGANIZATION for STANDARDS (ISO)

ISO 10012-1 - Equipment, Meteorological Confirmation System for Measuring.

(Application for copies should be addressed to the American National Standards Institute, 11 West 42nd Street, New York, NY 10036.)

2.4 Order of precedence. In the event of a conflict between the text of this document and the references cited herein (except for related associated specifications), the text of this document takes precedence. Nothing in this document, however, supersedes applicable laws and regulations unless a specific exemption has been obtained.

3. REQUIREMENTS

3.1 Associated specifications. The individual part requirements shall be as specified herein and in accordance with the applicable associated specifications. In the event of any conflict between requirements of this specification and the associated specifications, the latter shall govern (see 6.2).

3.2 Qualification. Networks furnished under this specification shall be products that are authorized by the qualifying activity for listing on the applicable qualified products list at the time set for opening of bids (see 4.4 and 6.3).

3.3 Material. The material shall be as specified herein. However, when a definite material is not specified, a material shall be used which will enable the networks to meet the performance requirements of this specification. Acceptance or approval of any constituent material shall not be construed as a guaranty of the acceptance of the finished product.

3.4 Interface, and physical dimension requirements. Networks shall meet the interface, and physical dimensions specified (see 3.1). Each network shall consist of film type resistance elements with terminations or, film type resistance elements, and ceramic capacitor with terminations (see 3.1).

3.4.1 Enclosure. Networks shall be encapsulated sufficiently to withstand the environmental tests specified. There shall be no voids which expose the internal circuitry.

3.4.2 Termination leads. Terminal leads shall be free of foreign material and solderable as specified. Leads shall be judged to be free of foreign material if the visual criteria are met.

Source: https://assist.dla.mil -- Downloaded: 2016-11-25T17:09Z
Check the source to verify that this is the current version before use.

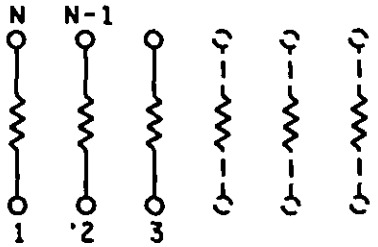

SCHEMATIC A

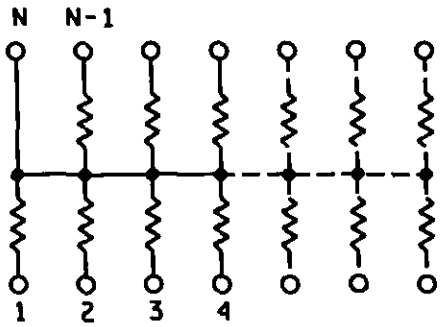

SCHEMATIC B

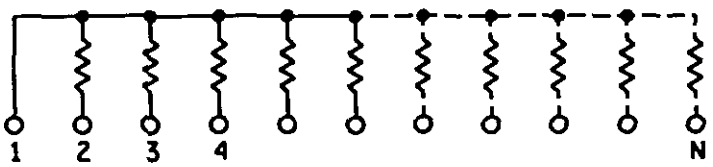

SCHEMATIC C

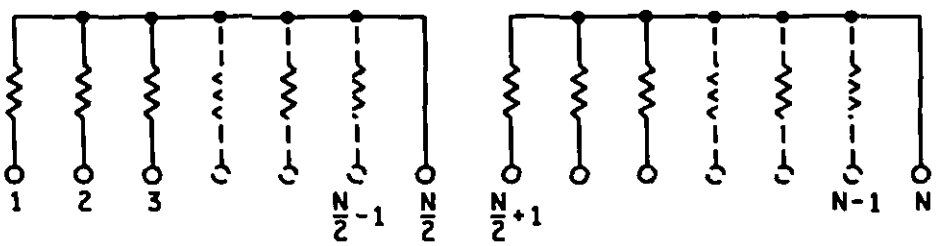

SCHEMATIC D

FIGURE 1. Schematics.

Source: https://assist.dla.mil -- Downloaded: 2016-11-25T17:09Z
Check the source to verify that this is the current version before use.

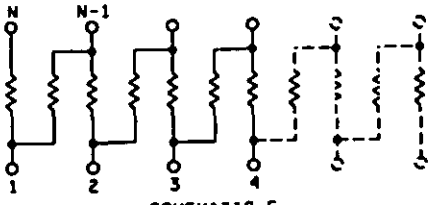

SCHEMATIC E

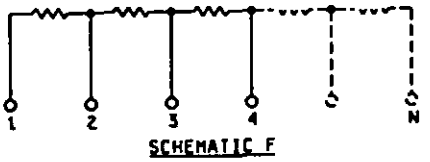

SCHEMATIC F

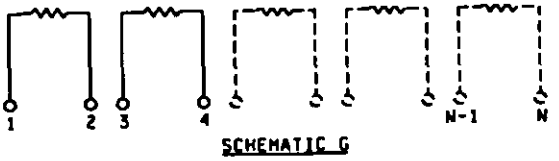

SCHEMATIC G

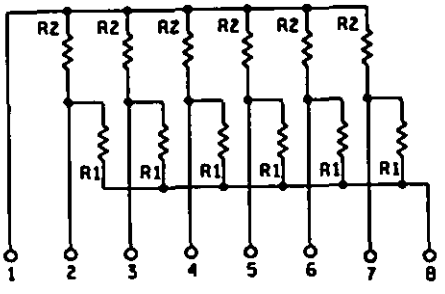

SCHEMATIC H

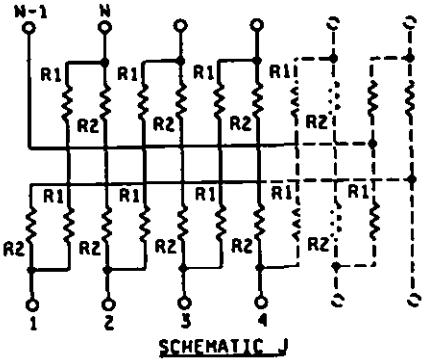

SCHEMATIC J

FIGURE 1. Schematics - Continued.

Source: https://assist.dla.mil -- Downloaded: 2016-11-25T17:09Z
Check the source to verify that this is the current version before use.

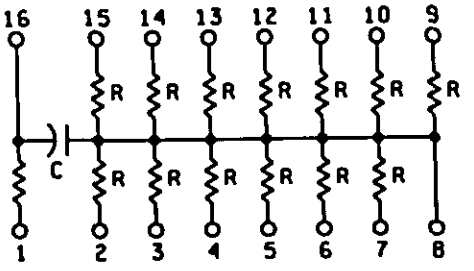

SCHEMATIC K

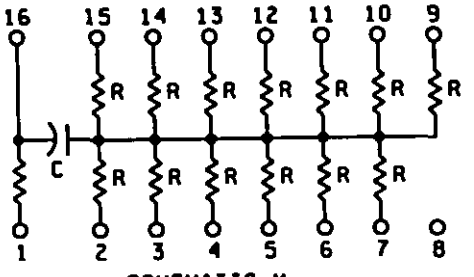

SCHEMATIC M

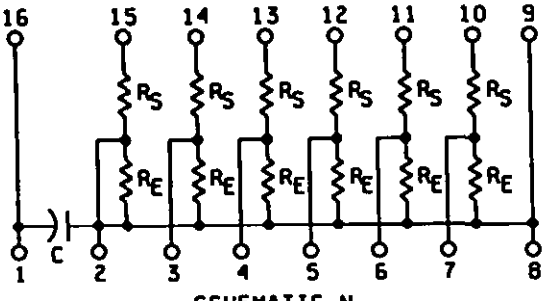

SCHEMATIC N

FIGURE 1. Schematics - Continued.

Source: https://assist.dla.mil -- Downloaded: 2016-11-25T17:09Z
Check the source to verify that this is the current version before use.

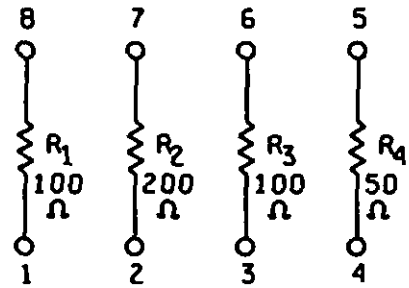

SCHEMATIC X

(RESISTANCE CODE A001)

Resistor	Value	Tolerance	Characteristic
R_1	100Ω	±1%	K
R_2	200Ω	±1%	K
R_3	100Ω	±5%	H
R_4	50Ω	±5%	H

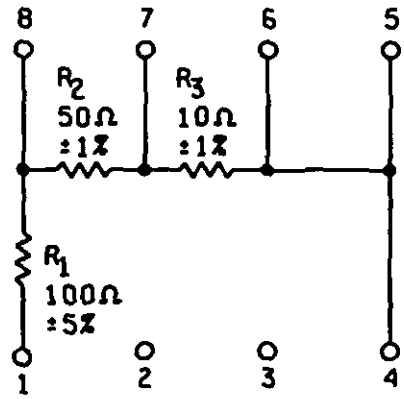

SCHEMATIC X

(RESISTANCE CODE A002)

Resistor	Value	Tolerance	Characteristic
R_1	100Ω	±5%	K
R_2	50Ω	±1%	H
R_3	10Ω	±1%	H

FIGURE 1. Schematics - Continued.

Source: https://assist.dla.mil -- Downloaded: 2016-11-25T17:09Z
Check the source to verify that this is the current version before use.

3.4.3 Internal visual inspection (applicable to characteristics C and V). Networks meeting the requirements of characteristics C and V shall be subjected to a precap visual inspection that shall require as a minimum, the following inspections:

a. Inspection of internal connections.

b. Inspection of metallization.

c. Inspection of die mounting.

d. Inspection for foreign or extraneous material.

3.4.4 Metallization resistance. The resistance of the metallization of the longest path in the network shall not exceed the limits in table VI.

TABLE VI. Metallization resistance.

Nominal element resistance value (ohms) R	Maximum metallization resistance (ohms) R
$R \leq 1{,}000$	1
$1{,}000 < R < 10{,}000$	5
$R \geq 10{,}000$	10

3.4.5 Soldering. If soldering is used for internal connections, it shall be of such a quality as to enable the networks to meet all the requirements of this specification, and having a liquid point not less than +280°C.

3.4.5.1 Bonding. If thermo-compression bonding is used for internal connections, a gold bond shall form a solid phase weld (see 3.1).

3.4.6 Tin plated finishes. Use of tin plating is prohibited (see 6.4.3.1). Use of tin-lead finishes are acceptable provided that the minimum lead content is 3 percent.

3.4.7 Solder dip (retinning) leads. The manufacturer may solder dip/retin the leads of product supplied to this specification provided the solder dip process has been approved by the qualifying activity. The manufacturer shall maintain a solder purity in accordance with table VII during the tinning process.

Source: https://assist.dla.mil -- Downloaded: 2016-11-25T17:09Z
Check the source to verify that this is the current version before use.

TABLE VII. Contamination limits.

Contamination	Tinning percent by weight 1/
Copper	.75
Gold	.50
Cadmium	.01
Zinc	.008
Aluminum	.008
Antimony	.50
Iron	.02
Arsenic	.03
Bismuth	.25
Silver	.75
Nickel	.025

1/ This is a fixed percentage by weight of the solder.

3.4.7.1 Qualifying activity approval. Approval of the solder dip process will be based on one of the following options:

a. When the original lead finish qualified was hot solder dip lead finish 52 of MIL-STD-1276.

(NOTE: The 200 microinch thickness is not applicable.) The manufacturer shall use the same solder dip process for retinning or equivalent as is used in the original manufacture of the product.

b. When the lead originally qualified was not hot solder dip lead finish 52 of MIL-STD-1276 as prescribed in 3.4.7.1a, approval for the process to be used for solder dip shall be based on the following test procedure:

(1) Thirty samples of any resistance value for each style and lead finish are subjected to the manufacturing's solder dip process. Following the solder dip process, the resistors are subject to the direct current resistance test and other group A electricals. No defects are allowed.

(NOTE: If hermetic seal testing is required in group A, these tests would also be performed. No defects are allowed.)

(2) Ten of the 30 samples are then subjected to the solderability test. No defects are allowed.

(3) The remaining 20 samples are subjected to the resistance to solder heat test followed by the moisture resistance test (or hermetic seal test if the device is hermetically sealed). No defects are allowed.

Source: https://assist.dla.mil -- Downloaded: 2016-11-25T17:09Z
Check the source to verify that this is the current version before use.

3.4.7.2 Solder dip/retinning options. The manufacturer may solder dip/retin as follows:

a. After the 100 percent group A screening tests. Following the solder dip/retinning process, the electrical measurements required in group A, subgroup 1, 100 percent dc resistance shall be repeated on 100 percent of the lot. (NOTE: The manufacturer may solder dip/retin prior to the 100 percent electrical measurements of the group A, subgroup 1 tests.) For "M" level part, the percent defective allowable (PDA) (see 4.6.1.2.2.1) for the electrical measurements shall be as for the subgroup 1 tests.

b. As a corrective action if the lot fails the group A solderability tests, the lot may be retinned no more than two times (for "M" level part only). The lot after retinning shall be 100 percent screened for group A electrical requirements (dc resistance) and parts failing (lot not exceeding PDA for group A, subgroup 1, see 4.6.1.2.2.1) these screens shall not be supplied to this specification, if electrical failures are detected after the second retinning operation exceeding 1 percent of the lot, the lot shall not be supplied to this specification.

c. After the group A inspection has been completed. Following the solder dip/retinning process, the electrical measurements required in group A, subgroup 1, 100 percent dc resistance shall be repeated on 100 percent of the lot. The PDA for the electrical measurements shall be as for the subgroup 1 tests (see 4.6.1.2.2.1) (for "M" level part only). Following these tests the manufacturer shall submit the lot to the group A solderability test as specified in 4.8.6.

3.5 Power rating. The networks and individual resistors shall have a power rating based on a continuous full-load operation at an ambient temperature of 70°C. For temperature other than 70°C, the power rating shall be in accordance with figure 2.

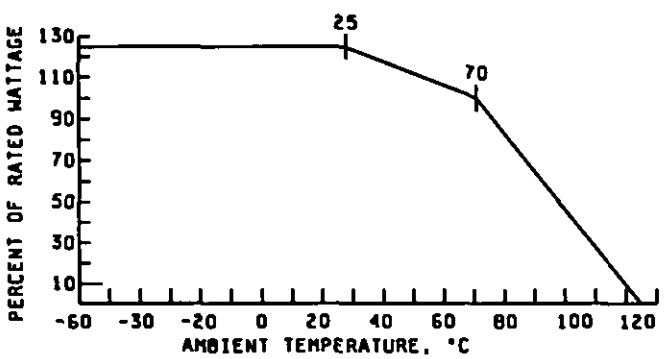

NOTE: This curve indicates the percentage of nominal wattage to be applied at temperature other that 70°C, however, at no time shall the applied voltage exceed the maximum for each style (see 3.1).

FIGURE 2. Power rating curve.

Source: https://assist.dla.mil -- Downloaded: 2016-11-25T17:09Z
Check the source to verify that this is the current version before use.

3.6 Voltage rating. Each resistor element shall have a rated dc continuous working voltage or an approximate sine-wave root-mean-square (rms) continuous working voltage corresponding to the wattage (power) rating, as determined from the following formula:

$$E = \sqrt{(PR)}$$

Where:

E = Continuous rated dc or rms working voltage in volts.
P = Rated wattage in watts.
R = Nominal resistance in ohms.

In no case shall the rated voltage be greater than the applicable maximum voltage (see 3.1).

3.7 Thermal shock. When networks are tested as specified in 4.8.3, there shall be no evidence of mechanical damage. For the combined thermal shock and power conditioning test (see 3.8) of qualification inspection group IV, and group C inspection, the networks shall meet the following requirements:

Characteristic	Delta R	Resistance ratio
C and V	±(0.25 percent +0.01 ohm)	±0.03 percent
H	±(0.50 percent +0.01 ohm)	- - - - - - -
K and M	±(0.70 percent +0.01 ohm)	- - - - - - -
R	±(0.08 percent +0.01 ohm)	±0.04 percent
Y	±(0.02 percent +0.01 ohm)	±0.01 percent

For the thermal shock test of qualification inspection group IV, and group C inspection, networks shall not exceed the following requirements:

Characteristic	Delta R	Resistance ratio
C and V	±(0.15 percent +0.01 ohm)	±0.03 percent
H	±(0.25 percent +0.01 ohm)	- - - - - - -
K and M	±(0.50 percent +0.01 ohm)	- - - - - - -
R	±(0.05 percent +0.01 ohm)	±0.02 percent
Y	±(0.01 percent +0.01 ohm)	±0.01 percent

Source: https://assist.dla.mil -- Downloaded: 2016-11-25T17:09Z
Check the source to verify that this is the current version before use.

3.8 Power conditioning. When networks are tested as specified in 4.8.4, there shall be no mechanical damage. For the combined power conditioning and thermal shock test (see 3.7), networks shall meet the following requirements

Characteristic	Delta R	Resistance ratio
C and V	±(0.25 percent +0.01 ohm)	±0.03 percent
H	±(0.50 percent +0.01 ohm)	- - - - - - -
K and M	±(0.70 percent +0.01 ohm)	- - - - - - -
R	±(0.08 percent +0.01 ohm)	±0.04 percent
Y	±(0.02 percent +0.01 ohm)	±0.01 percent

3.9 DC resistance.

3.9.1 Individual resistance. When networks are tested as specified in 4.8.5, the dc resistance shall be within the specified tolerance of the nominal resistance (see 1.2.1.3) and shall be stable within the specified tolerance during the measurement.

3.9.2 Resistance between isolated pins. The resistance between any two isolated resistors tested as specified in 4.8.5 shall be not less than 5 megohms. This shall only be measured during the resistance test on group I of qualification and group A inspection.

3.9.3 Resistance ratio accuracy (applicable to characteristic C, R, V, and Y). When networks are tested as specified in 4.8.5, the resistance ratio accuracy shall meet the requirements of table VIII.

TABLE VIII. Resistance ratio accuracy.

Characteristic	Resistance tolerance	Resistance ratio accuracy (percent)
Y	V T	.005 .01
R Y	A	.05
C R V Y	B D	0.1 0.1
C R V Y	F	0.5

3.10 Hermetic seal (applicable to characteristic C and Y). For the purpose of this specification, a hermetically sealed network is one which shall be cable of passing the seal test specified in 4.8.21 or of meeting a leak rate requirements of not more than 5.0×10^{-7} cubic centimeters per second. Materials used for this enclosure shall be ceramic, metal, glass, or combinations thereof.

Source: https://assist.dla.mil -- Downloaded: 2016-11-25T17:09Z
Check the source to verify that this is the current version before use.

3.10.1 Nonhermetic seal (applicable to characteristics H, K, M, R, and V). For the purposes of this specification, a nonhermetically sealed network is one not conforming in full to the requirements of 3.10. A qualified network which meets all requirements of 3.10 may be furnished to meet these characteristics; however, the network must continue to meet all the requirements of the C characteristic. Characteristics H, K, M, R, V, and Y networks shall not be furnished against C and Y requirements.

3.11 Solderability. When networks are tested as specified in 4.8.6, they shall meet the criteria for wire lead evaluation in the test standard.

3.12 Resistance to solvents. When networks are tested as specified in 4.8.7, there shall be no evidence of mechanical damage and the marking shall remain legible.

3.13 Resistance temperature characteristic. When networks are tested as specified in 4.8.8, the resistance-temperature characteristic, at each of the temperatures specified in table IX referred to room ambient temperature, shall not exceed the following requirements:

Characteristic	Resistance temperature characteristic	Element tracking
C and V	± 50 PPM	± 5 PPM
H	± 50 PPM	- - - -
K	±100 PPM	- - - -
M	±300 PPM	- - - -
R	± 25 PPM	± 5 PPM
Y	± 5 PPM	± 5 PPM

TABLE IX. Resistance-temperature characteristic.

Sequence	Temperature	
	Qualification inspection	Group B acceptance inspection
	°C	°C
1	Room temperature 1/	Room temperature 1/
2	-15 ±3	-55 ±3
3	-55 ±3	Room temperature 1/
4	Room temperature 1/	+125 ±3
5	+65 ±3	- - - -
6	+125 ±3	- - - -

1/ This temperature shall be considered the reference temperature for each of the succeeding temperatures.

Source: https://assist.dla.mil -- Downloaded: 2016-11-25T17:09Z
Check the source to verify that this is the current version before use.

3.14 Low temperature operation. When networks are tested as specified in 4.8.9, there shall be no evidence of mechanical damage and shall meet the following requirements:

Characteristic	Delta R	Resistance ratio
C and V	±(0.10 percent +0.01 ohm)	±0.02 percent
H	±(0.10 percent +0.01 ohm)	- - - - - - -
K	±(0.25 percent +0.01 ohm)	- - - - - - -
M	±(0.50 percent +0.01 ohm)	- - - - - - -
R	±(0.03 percent +0.01 ohm)	±0.02 percent
Y	±(0.01 percent +0.01 ohm)	±0.01 percent

3.15 Short time overload. When networks are tested as specified in 4.8.10, there shall be no evidence of arcing, burning, or charring. The networks shall meet the following requirements:

Characteristic	Delta R	Resistance ratio
C and V	±(0.10 percent +0.01 ohm)	±0.02 percent
H	±(0.10 percent +0.01 ohm)	- - - - - - -
K	±(0.25 percent +0.01 ohm)	- - - - - - -
M	±(0.50 percent +0.01 ohm)	- - - - - - -
R	±(0.03 percent +0.01 ohm)	±0.02 percent
Y	±(0.01 percent +0.01 ohm)	±0.01 percent

3.16 Terminal strength. When networks are tested as specified in 4.8.11, there shall be no evidence of breaking or loosening of terminals from the networks form, or chipping of coating. The networks shall meet the following requirements:

Characteristic	Delta R	Resistance ratio
C and V	±(0.10 percent +0.01 ohm)	±0.03 percent
M, K, and H	±(0.25 percent +0.01 ohm)	- - - - - - -
R	±(0.03 percent +0.01 ohm)	±0.02 percent
Y	±(0.01 percent +0.01 ohm)	±0.01 percent

3.17 Dielectric withstanding voltage. When networks are tested as specified in 4.8.12, there shall be no mechanical damage, arcing, or breakdown. The leakage current shall not exceed 1 milliampere (mA).

3.18 Insulation resistance. When networks are tested as specified in 4.8.13, the insulation resistance shall not be less than 10,000 megohms.

Source: https://assist.dla.mil -- Downloaded: 2016-11-25T17:09Z
Check the source to verify that this is the current version before use.

3.19 Resistance to soldering heat. When networks are tested as specified in 4.8.14, there shall be no external evidence of mechanical damage nor internal evidence of solder reflow or heat damage. The networks shall meet the following requirements.

Characteristic	Delta R	Resistance ratio
C and V	±(0.10 percent +0.01 ohm)	±0.02 percent
H	±(0.10 percent +0.01 ohm)	- - - - - - -
K and M	±(0.25 percent +0.01 ohm)	- - - - - - -
R	±(0.05 percent +0.01 ohm)	±0.02 percent
Y	±(0.01 percent +0.01 ohm)	±0.01 percent

3.20 Moisture resistance. When networks are tested as specified in 4.8.15, there shall be no evidence of mechanical damage. The networks shall meet the following requirements:

Characteristic	Delta R	Resistance ratio
C and V	±(0.20 percent +0.01 ohm)	±0.02 percent
H	±(0.40 percent +0.01 ohm)	- - - - - - -
K and M	±(0.50 percent +0.01 ohm)	- - - - - - -
R	±(0.05 percent +0.01 ohm)	±0.02 percent
Y	±(0.01 percent +0.01 ohm)	±0.01 percent

Additionally, the dielectric withstanding voltage shall be as specified in 3.17 and the insulation resistance shall be 100 megohms minimum.

3.21 Shock (specified pulse). When networks are tested as specified in 4.8.16, there shall be no evidence of mechanical damage and they shall meet the following requirements:

Characteristic	Delta R	Resistance ratio
C and V	±(0.25 percent +0.01 ohm)	±0.03 percent
H, K and M	±(0.25 percent +0.01 ohm)	- - - - - - -
R	±(0.03 percent +0.01 ohm)	±0.02 percent
Y	±(0.01 percent +0.01 ohm)	±0.01 percent

3.22 Vibration, high frequency. When networks are tested as specified in 4.8.17, there shall be no mechanical damage and they shall meet the following requirements:

Characteristic	Delta R	Resistance ratio
C and V	±(0.25 percent +0.01 ohm)	±0.03 percent
H, K and M	±(0.25 percent +0.01 ohm)	- - - - - - -
R	±(0.03 percent +0.01 ohm)	±0.02 percent
Y	±(0.01 percent +0.01 ohm)	±0.01 percent

Source: https://assist.dla.mil -- Downloaded: 2016-11-25T17:09Z
Check the source to verify that this is the current version before use.

3.23 Life. When networks are tested as specified in 4.8.18, there shall be no evidence of mechanical damage and they shall meet the following requirements:

Characteristic	Delta R	Resistance ratio
C, V and R	±(0.10 percent +0.01 ohm)	±0.03 percent
H and K	±(0.50 percent +0.01 ohm)	- - - - - - -
M	±(2.0 percent +0.01 ohm)	- - - - - - -
Y	±(0.05 percent +0.01 ohm)	±0.025 percent

3.23.1 Power rating at 25°C (see 3.1 and 6.5). For qualification testing only, networks shall be subjected to the specified voltage and shall dissipate the assigned 25°C wattage rating for a 1000-hour duration. The networks shall meet the following requirements:

Characteristic	Delta R	Resistance ratio
C, V and R	±(0.10 percent +0.01 ohm)	±0.03 percent
H and K	±(0.50 percent +0.01 ohm)	- - - - - - -
M	±(2.0 percent +0.01 ohm)	- - - - - - -
Y	±(0.05 percent +0.01 ohm)	±0.025 percent

3.24 High temperature exposure. When networks are tested as specified in 4.8.19, there shall be no evidence of mechanical damage and they shall meet the following requirements:

Characteristic	Delta R	Resistance ratio
C and V	±(0.10 percent +0.01 ohm)	±0.03 percent
H	±(0.20 percent +0.01 ohm)	- - - - - - -
K	±(0.50 percent +0.01 ohm)	- - - - - - -
M	±(1.0 percent +0.01 ohm)	- - - - - - -
R	±(0.05 percent +0.01 ohm)	±0.02 percent
Y	±(0.02 percent +0.01 ohm)	±0.02 percent

3.25 Low temperature storage. When networks are tested as specified in 4.8.20, there shall be no evidence of mechanical damage and they shall meet the following requirements:

Characteristic	Delta R	Resistance ratio
C and V	±(0.10 percent +0.01 ohm)	± 0.02 percent
H	±(0.10 percent +0.01 ohm)	- - - - - - -
K	±(0.25 percent +0.01 ohm)	- - - - - - -
M	±(0.50 percent +0.01 ohm)	- - - - - - -
R	±(0.03 percent +0.01 ohm)	±0.02 percent
Y	±(0.01 percent +0.01 ohm)	±0.01 percent

3.26 Fungus. All external materials shall be nonnutrient to fungus growth or shall be suitably treated to retard fungus growth. The manufacturer shall verify by certification that all external materials are fungus resistant or shall test the resistors as specified in 4.8.22. There shall be no evidence of fungus growth on the external surfaces.

Source: https://assist.dla.mil -- Downloaded: 2016-11-25T17:09Z
Check the source to verify that this is the current version before use.

3.27 Marking. Each network shall be marked in accordance with method I of MIL-STD-1285 and as indicated below:

a. Complete military part number (PIN).

b. Manufacturer's Commercial and Government Entity (CAGE) code.

c. Resistance value and resistance tolerance (manufacturer's option).

d. Manufacturing date code.

e. Manufacturer's lot code (manufacturer's option).

f. Pin identifier.

3.27.1 Resistance temperature characteristic and resistance tolerance substitution. Networks qualified to lower resistance temperature characteristics or lower tolerance levels, or both, with acquiring agency approval, are substitutable for networks marked to higher resistance temperature characteristics or higher tolerance levels and shall not be remarked unless specified in the contract or purchase order (see 6.2) (see tables X and XI).

3.27.2 Part number level substitution (see 1.2.1). Networks that have been subjected to the 100 percent burn-in screen tests ("M" part number level) are substitutable, with acquiring agency approval, for networks that have not been subjected to the 100 percent burn-in screens ("C" part number level). All other performance characteristics (e.g., resistance value, characteristic, tolerance, schematic) must be the same or meet other substitution criteria (see 3.27.1). Networks shall not be remarked unless specified in the contract or purchase order (see 6.2).

TABLE X. Temperature characteristic substitution.

Temperature characteristic	Acceptable temperature characteristic substitute
H	H
K	H, K
M	

Source: https://assist.dla.mil -- Downloaded: 2016-11-25T17:09Z
Check the source to verify that this is the current version before use.

TABLE XI. Resistance tolerance substitution.

Resistance tolerance	Resistance tolerance substitute
B	
D	B
F	B, D
G	B, D, F
J	B, D, F, G

3.28 Recycling and waste prevention. *Recovered materials or environmentally preferable materials* shall be used whenever possible without jeopardizing the intend end use of the item.

3.29 Workmanship. Networks shall be processed in such a manner as to be uniform in quality and shall meet the requirements of 3.3 to 3.4.5 inclusive, and be free from other defects that will affect life, serviceability, or appearance.

4. VERIFICATION

4.1 Classification of inspections. The inspection requirements specified herein are classified as follows:

a. Qualification inspection (see 4.4).

b. Verification of qualification (see 4.5).

c. Conformance inspection (see 4.6).

d. Periodic inspection (see 4.7).

4.2 Test equipment and inspection facilities. Test and measuring equipment and inspection facilities of sufficient accuracy, quality and quantity to permit performance of the required inspection shall be established and maintained by the contractor. The establishment and maintenance of a calibration system to control the accuracy of the measuring and test equipment shall be in accordance with *ANSI/NCSL Z540-1, ISO 10012-1 or approved equivalent as approved by the qualifying activity.*

4.3 Inspection conditions and precautions.

4.3.1 Inspection conditions. Unless otherwise specified herein, all inspections shall be performed in accordance with the test conditions specified in the "GENERAL REQUIREMENT" of MIL-STD-202.

4.3.2 Precautions. Adequate precautions shall be taken during inspection to prevent condensation of moisture on networks, except during moisture-resistance test.

4.4 Qualification inspection. Qualification inspection shall be performed at a laboratory acceptable to the Government (see 6.3) on sample units produced with equipment and procedures normally used in production.

Source: https://assist.dla.mil -- Downloaded: 2016-11-25T17:09Z
Check the source to verify that this is the current version before use.

4.4.1 Sample. The number of sample units comprising a sample of networks to be submitted for qualification inspection shall be as specified in appendix A of this specification. The sample shall be taken at random from a production run and shall be produced with equipment and procedures normally used in production. The sample units shall have been subjected to and passed the requirements of group A inspection (see 4.6.1.2). Qualification shall not be granted if group A inspection requirements are not met. Each network style shall be qualified separately (see 3.1).

4.4.2 Test routine. Sample units shall be subjected to the qualification inspection specified in table XII in the order shown. All sample units shall be subjected to the inspection of groups I and Ia, except for the sample units required for groups II through VIII. All sample units shall be divided as specified in table XII for groups II through VIII inclusive, and subjected to the inspection for their particular group. For purposes of verifying the 25°C power rating (see 3.1 and 6.5), a separate sample of 30 units shall be subjected to group I, group Ia, and group VIa of table XII. This test is an initial qualification requirement only. Sample sizes and extent of qualification for characteristics shall be specified in appendix A of this specification

4.4.3 Failures. Failures in excess of those allowed in table XII shall be cause for refusal to grant qualification.

4.5 Verification of qualification. Every 6 months the manufacturer shall provide verification of qualification to the qualifying activity. Continuation is based on meeting the following requirements:

a. Design of resistor has not been modified.

b. Lot rejection for group A (subgroups 2 and 3) and group B does not exceed 5 percent or one lot (class "M" level part only).

c. Periodic group C inspection (class "M" level part only).

d. Continued qualification to the non burn-in screened level ("C" part number) shall be based on retaining qualification for the 100 percent burn-in screened level ("M" part number) product.

4.6 Conformance inspection.

4.6.1 Inspection of product for delivery. For the "M" level part number, inspection of product for delivery shall consist of group A and group B inspections. Group B inspection for delivery for the "M" part level number is not required when the qualifying activity has allowed group B testing to be performed annually. For the "C" part level number, inspection of product for delivery shall consist of the manufacturer's inspection system (see 4.6.1.2.1).

4.6.1.1 Inspection lot. An inspection lot shall consist of all networks of similar styles with the same protection enclosure or coating design configuration and height dimensions manufactured or presented for shipping against this document during a period of not more than a month. Resistors of various resistance values and tolerances may be combined to form a lot provided they are all made with the same enclosures material on the same production line using the same methods and processes. Characteristics may be sampled as provided in the qualification coverage table XXI of appendix A to cover other characteristics as long as the materials and processes are the same.

Source: https://assist.dla.mil -- Downloaded: 2016-11-25T17:09Z
Check the source to verify that this is the current version before use.

TABLE XII. Qualification inspection.

Inspection	Number of sample units	Requirement paragraph	Method paragraph	Number of 1/ failures allowed
Group I 2/ 3/ Thermal shock Power conditioning DC resistance Hermetic seal (when applicable)	All sample units 4/	3.7 3.8 3.9 3.10	4.8.3 4.8.4 4.8.5 4.8.21	5/
Group Ia 3/ 6/ Visual and mechanical inspection		3.1, 3.3, 3.4 3.27, 3.28	4.8.2	0
Group Ib 7/ Solderability	5	3.11	4.8.6	1
Group II 7/ Resistance to solvents	12	3.12	4.8.7	1
Group III Resistance temperature characteristic Low temperature operation Short-time overload Terminal strength Hermetic seal (when applicable)	20 or 30 10 high 10 critical 8/ 10 low	3.13 3.14 3.15 3.16 3.10	4.8.8 4.8.9 4.8.10 4.8.11 4.8.21	1 9/
Group IV Thermal shock Dielectric withstanding voltage Insulation resistance Resistance to soldering heat 10/ Moisture resistance Hermetic seal (when applicable)	20 or 30 10 high 10 critical 8/ 10 low	3.7 3.17 3.18 3.19 3.20 3.10	4.8.3 4.8.12 4.8.13 4.8.14 4.8.15 4.8.21	1 9/
Group V Shock (specified pulse) Vibration, high frequency Hermetic seal (when applicable)	20 or 30 10 high 10 critical 8/ 10 low	3.21 3.22 3.10	4.8.16 4.8.17 4.8.21	1 9/
Group VI Life	20 or 30 10 high 10 critical 8/ 10 low	3.23	4.8.18	0 9/
Group VIa Power rating at 25°C	20 or 30 10 high 10 critical 8/ 10 low	3.23.1	4.8.18	1 9/

See footnotes at end of table.

Source: https://assist.dla.mil -- Downloaded: 2016-11-25T17:09Z
Check the source to verify that this is the current version before use.

TABLE XII. Qualification inspection - Continued.

Inspection	Number of sample units	Requirement paragraph	Method paragraph	Number of failures allowed
Group VII High temperature exposure Low temperature storage	20 or 30 10 high 10 critical 8/ 10 low	3.24 3.25	4.8.19 4.8.20	1 9/
Group VIII 4/ 11/ Fungus	10	3.26	4.8.22	0

1/ Failure of a single network in one or more tests of a group shall be charged as a single defective.
2/ Tests need not be performed if group A inspection has been performed on the qualification samples.
3/ Nondestructive tests.
4/ Sample units for groups II and VIII are not required to be subjected to group I.
5/ Networks shall meet all requirements of group I before subjecting to groups III through VII.
6/ Marking shall be considered defective if the marking is illegible or incorrect.
7/ Tests may be performed on electrical rejects.
8/ When no critical value is specified, only the highest and lowest resistance values shall be tested (20 samples total).
9/ Number of defective packages allowed per resistance value tested (e.g., low, critical, and high resistance).
10/ The internal visual examination shall be performed after the final inspection of group IV.
11/ The fungus requirement is either by certification or performance.

4.6.1.2 Group A inspection.

4.6.1.2.1 "C" level part number. The manufacturer shall establish and maintain an inspection system to verify that networks meet dc resistance, hermetic seal (when applicable), visual/mechanical, and solderability requirements. In-line or process controls may be part of such a system. The inspection system shall also include criteria for lot rejection and corrective action. (NOTE: Since the "C" level network is the "M" level design without the mandatory conformance inspection system, this product is still expected to meet the environmental qualification type requirements (e.g., moisture resistance, shock, vibration, etc.) (see 4.7.6).)

4.6.1.2.2 "M" level part number. Group A inspection shall consist of the inspections specified in table XIII, and shall be made on the same set of sample units, in the order shown.

Source: https://assist.dla.mil -- Downloaded: 2016-11-25T17:09Z
Check the source to verify that this is the current version before use.

TABLE XIII. Group A inspection (class "M" level part only).

Inspection	Requirement paragraph	Test method paragraph	Number of samples
Subgroup 1 Thermal shock Power conditioning DC resistance 1/ Hermetic seal (when applicable)	 3.7 3.8 3.9 3.10	 4.8.3 4.8.4 4.8.5 4.8.21	100 percent inspection
Subgroup 2 Visual examination	3.1, 3.4, 3.26, 3.27, 3.28	4.8.2	13 samples 0 defects
Subgroup 3 Solderability	3.11	4.8.6	5 samples 0 defects

1/ Networks shall meet the specified initial resistance tolerance. The resistance measurement made upon completion of power conditioning test may be used if a measurement has been made which can, without conversion, be directly related to nominal resistance value and tolerance.

4.6.1.2.2.1 Subgroup 1. Subgroup 1 tests shall be performed on 100 percent of the product supplied under this specification. Networks that are out of resistance tolerance, or which experience a change in resistance greater than that permitted for the tests of this subgroup shall be removed from the lot. Lots having more than 10 percent total rejects or 1 unit, whichever is greater, due to exceeding the specified resistance change limit shall not be furnished on contracts. Examples of defects shall be as specified in table XIV. Lots that exceed the group A, subgroup 1 screening PDA requirement may be supplied as class "C" level parts, provide all defects have been removed as part of a corrective action, and the part meets all "C" level part requirements. Parts which comply with the class "C" level shall be marked as "C" level product.

TABLE XIV. Classification of defects.

Construction	Requirement	Examples of defects
Body	Cracks or holes which could cause probable failures.	Major
Leads	Leads broken, crushed or nicked which would cause probable failure in use. Crushed or nicked at ends which would not cause failure in use. Lead spacing incorrect dimensions.	Major Minor Major
Marking	Incorrect, illegible marking.	Major

Source: https://assist.dla.mil -- Downloaded: 2016-11-25T17:09Z
Check the source to verify that this is the current version before use.

4.6.1.2.2.1.1 Manufacturer's production inspection. If the manufacturer performs tests similar to those specified in subgroup 1 of table XIII as the final step of the production process, group A, subgroup 1 inspection may be waived and the data resulting from the manufacturer's production tests may be used instead. Authority to waive the subgroup 1 inspection shall be granted by the qualifying activity only. The following criteria must be complied with:

a. Tests conducted by the manufacturer during production shall be clearly identical to or more stringent than those specified for subgroup 1. Test conditions shall be equal to or more stringent than those specified for subgroup 1 tests.

b. Manufacturer subjects 100 percent of the product supplied under this specification to the production tests.

c. The parameters measured and the failure criteria shall be the same or more stringent than those specified herein.

d. The lot rejection criteria are the same or more stringent than those specified herein.

e. Once approved, the manufacturer shall not change the test procedures or criteria without prior notification to and concurrence from the qualifying activity.

4.6.1.2.2.2 Subgroup 2. Subgroup 2 shall be performed on an inspection lot basis. A sample of 13 parts shall be randomly selected and if one or more defects are found, the lot shall be screened and defects removed. A new sample of 13 parts shall be then randomly selected. If one or more defects are found in this second sample for the same defect or rejection cause, the lot shall be rejected and shall not be supplied to this specification.

4.6.1.2.2.2.1 Rejected lots (subgroup 2). Rejected inspection lots may be resubmitted for Government acceptance only if the manufacturer performs 100-percent inspection on networks of the lot for those characteristics which were defective and resulted in rejection of the lot, removes all defective units and resubmits the lot for quality conformance inspection. Resubmitted lots shall be kept separate from new lots, and shall be clearly identified as resubmitted lots.

4.6.1.2.2.3 Subgroup 3 (solderability).

4.6.1.2.2.3.1 Sampling plan. Five samples shall be selected randomly from each inspection lot and subjected to the subgroup 3 solderability test. The manufacturer may use electrical rejects or empty body network from the subgroup 1 screening tests for all or part of the samples to be used for solderability testing. The empty body networks must be processed through all the standard manufacturing and test flow cycles, oven bakes, and temperature cycles of qualified networks to assure that the network leads and printed surfaces are in the usual condition prior to test. If there is one or more defects, the lot shall be considered to have failed.

Source: https://assist.dla.mil -- Downloaded: 2016-11-25T17:09Z
Check the source to verify that this is the current version before use.

4.6.1.2.2.3.2 Rejected lots. In the event of one or more defects, the inspection lot is rejected. The manufacturer may use one of the following options to rework the lot:

a. Each production lot that was used to form the failed inspection lot shall be individually submitted to the solderability test as required in 4.6.1.2.2.3.1. Production lots that pass the solderability test are available for shipment. Production lots failing the solderability test can be reworked only if submitted to the solder dip procedure in 4.6.1.2.2.3.2b.

b. The manufacturer submits the failed lot to a 100 percent solder dip using an approved solder dip process in accordance with 3.4.7. Following the solder dip, the electrical measurements required in group A, subgroup 1 tests shall repeated on 100 percent of the lot. The PDA for the electrical measurements shall be as for the subgroup 1 tests. (NOTE: If hermetic seal is required in group A, subgroup 1 tests, these tests shall be repeated.) Five additional samples shall then be selected and subjected to the solderability test with zero defects allowed. If the lot fails this solderability test, the lot may be reworked a second time and retested. If the lot fails the second rework, the lot shall be considered rejected and shall not be furnished against the requirements of this specification.

4.6.1.2.2.3.3 Disposition of samples. The solderability test is considered a destructive test and samples submitted to the solderability test shall not be supplied on the contract.

4.6.1.3 Group B inspection ("M" level part number only). Group B inspection shall consist of the tests specified in table XV, in the order shown. They shall be performed on sample units that have been subjected to and have passed group A inspection. As an option, subgroup 2 tests may be performed on electrical rejects or empty body networks. The empty body networks must be processed through all the standard manufacturing and test flow cycles, oven bakes, and temperature cycles of qualified networks to assure that the network leads and printed surfaces are in the usual condition prior to test.

4.6.1.3.1 Sampling. Qualified styles may be grouped together in single sample as describe below. This can be accomplished by proportion based on manufacturing percentages by style, equally divided by style or by establishing an alternating style sequence. In order to incorporate a style sampling grouping, a written description must be presented and approved by the qualifying activity. This plan must assure that the grouping only combines styles of the same basic design, encapsulate material, the same element type, and internal construction method.

STYLES THAT MAY BE GROUPED TOGETHER

DIPS	FLAT PACKS	SIPS	SIPS
RZ010, RZ130	RZ030	RZ040, RZ160	RZ070, RZ180, RZ210
RZ020, RZ140	RZ100	RZ050, RZ170	RZ080, RZ190, RZ220
	RZ150	RZ060, RZ200	RZ090, RZ230, RZ240

Source: https://assist.dla.mil -- Downloaded: 2016-11-25T17:09Z
Check the source to verify that this is the current version before use.

Networks of different characteristics may be grouped together for group B inspection subject to the rules for qualification of characteristic (see table XXI of appendix A), provided all networks are processed on the same production line using the same equipment, methods, processes, resistor film, the same enclosure material, and internal construction method.

TABLE XV. Group B inspection (class "M" level part only).

Inspection	Requirement paragraph	Test method paragraph	Number of samples
Subgroup 1 1/			
Resistance temperature characteristic	3.13	4.8.8	13
Subgroup 2 1/ 2/			
Resistance to solvents	3.12	4.8.7	8

1/ If the manufacturer can demonstrate that this test has been performed five consecutive times with zero failures, the frequency of this test, with the approval of the qualifying activity, can be performed on an annual basis. If the design, material, construction, or processing of the part is changed, or if there are any quality problems or failures, the qualifying activity may require resumption of the original test frequency.

2/ Tests may be performed on electrical rejects.

4.6.1.3.2 Subgroup 1. A sample of 13 parts shall be randomly selected, if one or more defects are found, the lot shall be rescreened and defects removed. A new sample of 13 parts shall then be randomly selected, if one or more defects are found in this second sample, the lot shall be rejected and shall not be supplied to this specification.

4.6.1.3.3 Subgroup 2. A sample of eight parts shall be randomly selected. If one or more defects are found, the lot shall be reworked to correct the defects or shall be rescreened and defects removed. A new sample of eight parts shall then be selected. If one or more defects are found in this second sample, the lot shall be rejected and shall not be supplied to this specification.

4.6.1.3.4 Disposition of sample units. Sample units which have passed all the group B, subgroup 1 inspections may be delivered on this contract provided they are within resistance tolerance and meet requirements for visual and mechanical inspection. Subgroup 2 samples shall not be shipped.

4.7 Periodic inspection ("M" level part number only). Periodic inspection shall consist of group C inspection. Except where results of these inspections show noncompliance with the applicable requirements (see 4.7.6), delivery of products which have passed groups A and B inspections shall not be delayed pending the results of these periodic inspections.

Source: https://assist.dla.mil -- Downloaded: 2016-11-25T17:09Z
Check the source to verify that this is the current version before use.

4.7.1. Group C inspections. Group C inspection shall consist of the tests specified in table XVI, in the order shown. They shall be performed on sample units selected from lots that have passed groups A and B inspections. Networks of similar styles and method of enclosure may be grouped together. Group C samples shall be representative of production.

4.7.1.2 Sampling. If more than 1,000 resistor networks of any style or style grouping are produced over the maintenance period, the group C tests shall be performed as specified. If the production rate is less than 1,000 resistor networks for any style or style grouping over the maintenance period, then the monthly quarter or semi-annual group C inspection may be postponed until at least 1,000 resistor networks of the style or style grouping are produced. In any case, the monthly tests shall be performed at least once every 3 months. The quarterly tests shall be performed at least every 6 months and the semi-annual tests shall be performed at least once every year. This requirement is waived if the manufacturer has obtained a reduced inspection status through the qualifying activity.

Qualified styles may be grouped together in single sample as describe below. This can be accomplished by proportion based on manufacturing percentages by style, equally divided by style or by establishing an alternating style sequence. In order to incorporate a style sampling grouping, a written description must be presented and approved by the qualifying activity. This plan must assure that the grouping only combines styles of the same basic design, encapsulate material, the same element type, and internal construction method.

STYLES THAT MAY BE GROUPED TOGETHER

DIPS	FLAT PACKS	SIPS	SIPS
RZ010, RZ130	RZ030	RZ040, RZ160	RZ070, RZ180, RZ210
RZ020, RZ140	RZ100	RZ050, RZ170	RZ080, RZ190, RZ220
	RZ150	RZ060, RZ200	RZ090, RZ230, RZ240

Networks of different characteristics may be grouped together for group C inspection subject to the rules for qualification of characteristic (see table XXI of appendix A) provided all networks are processed on the same production line using the same equipment, methods, processes, resistor film, the same enclosure material , and internal construction method.

4.7.2 Monthly. Ten sample units of any resistance value between the critical and low values shall be inspected every month. If none of these values are produced during the month, networks of the lowest resistance value produced shall be inspected, with one defective unit allowed.

4.7.3 Quarterly. Ten sample units with resistance values representative of production over that period shall be subjected to the tests of subgroup 1. Ten sample units of the value produced closest to the critical value shall be subjected to the test of subgroup 2. One defective unit shall be allowed for subgroup 1 and zero defects for subgroup 2.

4.7.4 Semiannually. Ten sample units with the resistance values representative of production over that period shall be subjected to the tests of subgroup 1. Ten sample units with resistance values representative of production over that period shall be subjected to the tests of subgroup 2. One defective unit shall be allowed.

Source: https://assist.dla.mil -- Downloaded: 2016-11-25T17:09Z
Check the source to verify that this is the current version before use.

4.7.5 Disposition of sample. Sample units which have been subjected to group C inspection shall not be delivered on the contract.

4.7.6 Noncompliance. If a sample fails to pass group C inspection, the manufacturer shall notify the qualifying activity and the cognizant inspection activity of such failure and take corrective action on the materials or processes, or both, as warranted, and on all units of product which can be corrected and which are manufactured under essentially the same conditions, with essentially the same materials, processes, etc., and which are considered subject to the same failure. Acceptance and shipment of the product shall be discontinued until corrective action, acceptable to the qualifying activity has been taken. This may also affect "C" level product as determined by the qualify activity (see 4.6.1.2.1). After the corrective action has been taken, group C inspection shall be repeated on additional sample units (all inspections, or the inspection which the original sample failed, at the option of the qualifying activity). Groups A and B inspections may be reinstituted; however, final acceptance and shipment shall be withheld until the group C inspection, has shown that the corrective action was successful.

4.8 Method of inspection.

4.8.1 Network handling procedures. When specified herein, the networks shall be tested mounted on a tests board as described in 4.8.1.1. For those test procedures where mounting requirements are unspecified, the networks may be tested unmounted using pressure type contacts.

4.8.1.1 Specified mounting. When specified in the test procedure, the networks shall be mounted on a suitable test board of glass base nominally .0625 inch (1.587 mm) thick. The test board shall be such that it shall not be the cause of, nor contribute to any failure of network in any of the tests for which it may be used. Networks must be spaced at least 0.5 inch (12. mm) from each other.

4.8.2 Visual and mechanical inspection. Networks shall be inspected to verify that the materials, design, construction, physical dimensions, and workmanship are in accordance with the acceptable requirements (see 3.1, 3.3, 3.4, 3.27, and 3.29).

Source: https://assist.dla.mil -- Downloaded: 2016-11-25T17:09Z
Check the source to verify that this is the current version before use.

TABLE XVI. Group C inspection (class "M" level parts only).

Inspection	Requirement paragraph	Test method paragraph	Number of sample units for inspection	Number of failures
Monthly 1/				
Thermal shock	3.7	4.8.3		
Dielectric withstanding voltage	3.17	4.8.12		
Insulation resistance	3.18	4.8.13		
Low temperature operation	3.14	4.8.9	10	1
Short-time overload	3.15	4.8.10		
Terminal strength	3.16	4.8.11		
Hermetic seal (when applicable)	3.10	4.8.21		
Quarterly				
Subgroup 1				
Resistance to soldering heat 2/	3.19	4.8.14		
Moisture resistance	3.20	4.8.15	10	1
Hermetic seal (when applicable)	3.10	4.8.21		
Subgroup 2				
Life	3.23	4.8.18	10	0
Semiannually				
Subgroup 1 1/				
Shock (specified pulse)	3.21	4.8.16	10	
Vibration, high frequency	3.22	4.8.17		
Subgroup 2 3/				1
High temperature exposure	3.24	4.8.19	10	
Low temperature storage	3.25	4.8.20		

See footnotes on next page.

Source: https://assist.dla.mil -- Downloaded: 2016-11-25T17:09Z
Check the source to verify that this is the current version before use.

TABLE XVI. Group C inspection (class "M" level parts only) - Continued.

1/ If the manufacturer can demonstrate that these tests have been performed for five consecutive times with zero failures, these tests, with the approval of the quality activity, can be deleted. The manufacturer, however, shall perform these tests every 3 years after the deletion as part of long term design verification. If the design, material, construction or processing of the part is changed, or if there are any problems, the qualifying activity may require resumption of the specified testing. Deletion of testing does not relieve the manufacturer from meeting the test requirement in case of dispute.
2/ The internal inspection shall be performed after the final inspection of the subgroup.
3/ If the manufacturer can demonstrate that this test has been performed for five consecutive times with zero failures, the frequency of this test, with the approval of the qualifying activity, can be performed on an annual basis. If the design, material, construction or processing of the part is changed, or if there are any quality problems or failures, the qualifying activity may require resumption of the original test frequency.

4.8.3 Thermal shock (see 3.7). Networks shall be tested in accordance with method 107 of MIL-STD-202. The following details and exception shall apply:

a. Mounting: The method used to transport and hold the networks shall ensure circulation of the ambient air to each network.

b. Measurement before cycling: DC resistance shall be measured as specified in 4.8.5.

c. Test condition: For qualification group I and group A inspection, test condition B. For qualification group IV and group C inspection, test condition B-1.

d. Measurement after cycling: Within 3 hours after stabilization at room temperature, dc resistance shall be measured as specified in 4.8.5. For qualification inspection group I, and group A inspection, dc resistance shall be measured following the test of 4.8.4.

Following the test, the networks shall be inspected for evidence of mechanical damage.

4.8.4 Power conditioning (see 3.8). Networks shall be tested in accordance with method 108 of MIL-STD-202. The following details and exceptions shall apply:

a. Test temperature and tolerance: 25°C +20°C, -5°C.

b. Initial measurements: Measurements may be made inside or outside the chamber.

(1) Inside chamber: When measurements are to be made inside the chamber, the initial dc resistance shall be measured, at the applicable test temperature, after temperature stabilization, and within 8 hours of exposure of the networks to the test temperature. This initial measurement shall be used as the reference temperature for all subsequent measurements under the same condition.

Source: https://assist.dla.mil -- Downloaded: 2016-11-25T17:09Z
Check the source to verify that this is the current version before use.

(2) Outside chamber: When measurements are to made outside the chamber, the initial dc resistance shall be measured at room temperature. This initial measurement shall be used as the reference temperature for all subsequent measurements under the same condition.

c. Operating conditions: Rated dc continuous working voltage, filtered or nonfiltered full-wave rectified as voltage shall be simultaneously applied to each resistor in the network intermittently, 1.5 hours on and 0.5 hour off, for 100 ±4 hours and at the test temperature. During the "on" cycle, the voltage shall be regulated and controlled to maintain ±5 percent of the rated continuous working voltage. Unless otherwise specified (see 3.1), power applied shall be 1.5 times rated power.

d. Measurements after test: Following a minimum 0.5 hour stabilization period, dc resistance shall be measured as specified in 4.8.5.

e. Inspection after test: Networks shall be inspected for evidence of mechanical damage.

4.8.5 DC resistance (see 3.9). The dc resistance shall be measured in accordance with method 303 of MIL-STD-202. The following details and exceptions shall apply:

a. Measuring apparatus: Different types of measuring test equipment (multimeters, brides, or equivalent) are permitted to be used on the initial and final readings of this test, provided the equipment is the same style, model, or if it can be shown that the performance of the equipment is equivalent or better.

b. Test voltage: Measurements of resistance shall be made using the test voltages specified in table XVII. The test voltage chosen, whether it be the maximum or a lower voltage which would still provide the sensitivity required, shall be applied across the terminals of the resistor. This same voltage shall be used whenever a subsequent resistance measurement is made.

TABLE XVII. Standard dc resistance test voltages.

Nominal resistance	Maximum test voltage		
	10 Milliwatts	25 to 99 Milliwatts	100 to 225 Milliwatts
Ohms	Volts	Volts	Volts
10 to 98.8	0.3	0.5	1.0
100 to 988	1.0	1.0	1.0
1,000 to 9,880	3.0	3.0	3.0
10,000 to 98,800	10.0	10.0	10.0
100,000 or higher	30.0	30.0	30.0

Source: https://assist.dla.mil -- Downloaded: 2016-11-25T17:09Z
Check the source to verify that this is the current version before use.

c. Temperature: The dc resistance test specified in group I of table XI shall be performed at 25°C ±5°C. Unless otherwise specified herein, for all other tests, the temperature at which subsequent and final resistance measurements are made in each test shall be within ±2°C of the temperature at which the initial resistance measurement was made.

d. Procedure: Unless otherwise specified (see 3.1), all resistor elements which can be isolated in the network shall be individually measured. All resistor elements which cannot be isolated in the network shall be measured using a guarded resistance measuring technique as far as practicable (see 3.1). Interpin resistance shall be measured using the test instrument used for measuring the isolated resistors.

e. Resistance ratio accuracy (applicable to characteristics C, R, V, and Y): Ratio accuracy is defined as the percent difference between the nominal resistance ratio and the ratio determined from the actual resistance measurement using the specified reference resistor from the applicable schematic (see 3.1). The ratio accuracy required shall be as specified. The change in ratio for any test is defined as the percent change in the actual ratio determined from resistance measurements before and after the test referred to the actual ratio before the test. The resistance ratio is defined as follows:

$$\frac{R_r}{R_{REF}}$$

R_{REF} - Resistance of the reference element.

R_r - Resistance of the element being measured.

4.8.6 Solderability (see 3.11). Networks shall be tested in accordance with method 208 of MIL-STD-202. The following details and exceptions shall apply:

a. All terminals of each network shall be tested.

b. Application of standard solderable wire is not required.

c. Leads shall be solderable .010 inch (0.25 mm) above seating plane.

d. For flat packs, the seating plane will be defined as 0.060 from component body, excluding any epoxy meniscus.

4.8.7 Resistance to solvents (see 3.12). Networks shall be tested in accordance with method 215 of MIL-STD-202. The following details shall apply:

a. The marked portion of the network body shall be brushed.

b. The number of sample units shall be as specified in tables XII and XV as applicable.

c. Networks shall be inspected for mechanical damage and legibility of markings.

Source: https://assist.dla.mil -- Downloaded: 2016-11-25T17:09Z
Check the source to verify that this is the current version before use.

4.8.8 Resistance temperature characteristic (see 3.13). Networks shall be tested in accordance with 304 of MIL-STD-202. The following details and exceptions shall apply:

a. Reference temperature: Room ambient temperature.

b. Test temperature: In accordance with table XVIII.

4.8.9 Low temperature operation (see 3.14). Following a dc resistance measurement as specified in 4.8.5, the networks shall be placed in a cold chamber at -65°C +0°C, -5°C. After 1 hour of stabilization at this temperature, full rated continuous working voltage as specified in 3.6 shall be applied for 45 minutes. The networks may be loaded individually or in parallel. Fifteen +5, -0 minutes after the removal of the voltage, the temperature in the chamber shall be gradually increased to room temperature within a period of not more than 8 hours. The networks shall be removed from the chamber and maintained at a temperature of 25°C ±5°C for a period of approximately 24 hours; the dc resistance shall then be measured as specified in 4.8.5. Networks shall then be inspected for evidence of mechanical damage.

TABLE XVIII. Resistance temperature characteristic.

Sequence	Temperature	
	Qualification inspection	Group B acceptance inspection 1/
	°C	°C
1	Room temperature 2/	Room temperature 2/
2	-15 ±3	-55 ±3
3	-55 ±3	Room temperature 2/
4	Room temperature 2/	+125 ±3
5	+65 ±3	—
6	+125 ±3	—

1/ At the option of the manufacturer, the reverse sequence may be as follows:

1 Room temperature 2/
2 +125 ±3
3 Room temperature 2/
4 -55 ±3

2/ This temperature shall be considered the reference temperature for each of the succeeding temperatures.

Source: https://assist.dla.mil -- Downloaded: 2016-11-25T17:09Z
Check the source to verify that this is the current version before use.

4.8.10 Short time overload (see 3.15). The dc resistance shall be measured as specified in 4.8.5. A dc test potential, 2.5 times the rated continuous working voltage (70°C power rating) but not exceeding twice the maximum voltage (see 3.1), shall be applied for 5 ±1 seconds to each resistor in the network, one at a time. If single resistors cannot be isolated, the voltage applied at the two terminals shall be 2.5 $\sqrt{PR}$, where R is the actual resistance measured at the two terminals and P is the combined power rating of the elements contributing to the measured resistance. The following conditions shall be maintained:

a. Networks are to be mounted in still air with no circulation other than that created by the heat of the network being operated.

b. Ambient temperature during test shall be 25°C ±5°C.

c. Thirty +15, -0 minutes after removal of the test potential, the dc resistance shall be measured as specified in 4.8.5. Networks shall be inspected for evidence of arcing, burning, and charring.

d. For referee purposes, a 10-second waiting period between voltage pulses shall be used.

4.8.11 Terminal strength (see 3.16).

4.8.11.1 Pull test. Networks shall be tested as follows:

a. Test weight:

(1) 24 ounces for flat packs.

(2) 4.5 pounds for other body styles.

b. Test time: 30 seconds.

c. Number of terminals to be tested: Three randomly selected terminals.

d. Procedure: The specified weight shall be applied, without shock, to each lead or terminal to be tested in a direction parallel to the axis of the lead (or terminal) and maintained for the specified test time. The tension shall be applied as close to the end of the lead (or terminal) as practicable.

e. Measurement after test: Networks shall be inspected for evidence of mechanical damage, and dc resistance shall be measured as specified in 4.8.5.

4.8.11.2 Bend test.

4.8.11.2.1 Bend test for configurations other than flat packs. Networks in dual-in-line and single-in-line packages shall be tested as follows:

a. Number of terminals to be tested: Three randomly selected terminals.

Source: https://assist.dla.mil -- Downloaded: 2016-11-25T17:09Z
Check the source to verify that this is the current version before use.

b. Procedure: Each lead selected to be tested of the network shall be bent through an angle sufficient to cause the lead to retain a permanent bend (i.e., after stress removal) of at least 15 degrees measured at the lead extremities about the first bend. At the completion of the initial bend, the leads shall be returned to their approximate original position. This procedure shall be performed three times.

c. Measurement after test: Networks shall be inspected for evidence of mechanical damage, and dc resistance shall be measured as specified in 4.8.5.

4.8.11.2.2 Bend test for flat packs. Networks in flat pack shall be tested as follows:

a. Number of terminals to be tested: Three randomly selected terminals.

b. Procedure: Unless otherwise specified (see 3.1), a force of 8 ±0.5 ounces shall be applied to each lead to be tested for three 90 ±5 degree arcs of the case. For leads with a section modules equal to or less than that of a lead with cross-section of .006 by .020 inch (0.15 by 0.51 mm), the force shall be 3 ±0.3 ounces. An arc is defined as the movement of the case, without torsion, to a position perpendicular to the pull axis and return to normal. All arcs on a single lead shall be made in the same direction and in the same plane without lead restriction. A bending cycle shall be completed in from 2 to 5 seconds. For networks with rectangular or ribbon leads the plane of the arcs shall be perpendicular to the flat plane of the lead. The test shall not be applied to the leads of packages where its application will apply primarily torsion forces at the lead seal.

c. Measurement after test: Networks shall be inspected for evidence of mechanical damage and dc resistance shall be measured as specified in 4.8.5.

4.8.12 Dielectric withstanding voltage (see 3.17).

4.8.12.1 Atmospheric pressure. Networks shall be tested in accordance with method 301 of MIL-STD-202. The following details shall apply:

a. Mounting:

(1) Dual-in-line (DIP) packages: The network shall be clamped by mounting with its top on a metal plate of sufficient size to extend beyond the network extremities. An additional metal plate shall be mounted against the bottom of the network, avoiding contact with the terminals. The terminals of the network shall be connected together.

(2) Single-in-line (SIP) and flat packages: The network shall be clamped by mounting with its sides on metal plates of sufficient size to extend beyond the network extremities and the terminals shall be connected together.

b. Magnitude of test voltage: 200 volts rms for DIPs and SIPs, and 100 volts for flat packs.

c. Nature of potential: An ac supply at commercial-line frequency (not more than 100 hertz (Hz) and waveform.

d. Duration of application of test voltage: One minute.

Source: https://assist.dla.mil -- Downloaded: 2016-11-25T17:09Z
Check the source to verify that this is the current version before use.

e. Points of application of test voltage: Between the terminals connected together and metal-mounting plate.

f. Inspections and measurements: During the tests, the leakage current shall be monitored and the networks inspected for evidence of arcing and breakdown. At the conclusion of the test, networks shall be inspected for evidence of damage.

4.8.13 Insulation resistance (see 3.18). Networks shall be tested in accordance with method 302 of MIL-STD-202. The following details shall apply:

a. Test condition A.

b. Special preparation: As specified in 4.8.12.1a.

c. Points of measurements: As specified in 4.8.12.1e.

4.8.14 Resistance to soldering heat (see 3.19). Networks shall be tested in accordance with method 210 of MIL-STD-202. The following details shall apply:

a. Measurement before test: DC resistance shall be measured as specified in 4.8.5.

b. Special preparation of specimen: Sample units shall not have been soldered during any of the previous tests.

c. Test condition C (solder 260°C ±5°C, immersion 10 ±2 seconds). A board with a maximum area of nine square inches shall be used, and the leads shall not be cut.

d. Depth of immersion: Depth of immersion shall be .0625 inch (1.587 mm) from seating plane.

e. Measurement after test: After completion of terminal immersion and following a minimum 3-hour cooling period, dc resistance shall be measured as specified in 4.8.5.

f. Inspection after test: Networks shall be inspected for evidence of mechanical damage.

g. Internal inspection: Upon completion of the final inspection of group IV in qualification inspection and quarterly, subgroup 1 of group C inspection, the networks shall be de-capped and inspected for evidence of solder reflow and heat damage.

4.8.15 Moisture resistance. Networks shall be tested in accordance with method 106 of MIL-STD-202. The following details and exceptions shall apply:

a. Initial measurement: Immediately following the initial conditioning period, dc resistance of resistors in the network shall be measured as specified in 4.8.5.

b. Loading voltage: A dc voltage equivalent to 0.10 of rated wattage shall be applied to all resistor elements during the first 2 hours of steps 1 and 4.

Source: https://assist.dla.mil -- Downloaded: 2016-11-25T17:09Z
Check the source to verify that this is the current version before use.

c. Subcycle: Step 7b shall not be applicable. Step 7a shall be performed during any five of the first nine cycles only.

d. Measurements at high humidity: None.

e. Final measurements: Upon completion of step 6 of the final cycle the resistor networks shall be removed from the chamber and within 24 hours, without any additional handling, the dc resistance, dielectric withstanding voltage, and insulation resistance shall be measured in accordance with 4.8.5, 4.8.12, and 4.8.13. When the networks are tested as specified, the change in resistance between initial and final measurements shall not exceed the value specified in 3.20.

f. Inspection after test: Networks shall be inspected for evidence of mechanical damage.

4.8.16 Shock (specified pulse) (see 3.21). Networks shall be tested in accordance with 213 of MIL-STD-202. The following details and exceptions shall apply:

a. Special mounting means: Networks shall be mounted in accordance with 4.8.1.1 on an appropriate mounting fixture. The mounting fixture shall be constructed in such a manner as to insure that the mounting supports remain in a static condition with reference to the shock-test table. Networks shall be mounted in relation to the equipment in such a manner that the stress applied is in the direction which would be considered most detrimental. Single-in-line networks with a height profile in excess of .200 inch (5.08 mm) (styles RZ040, RZ050, RZ060, RZ160, RZ170, and RZ200) shall be mounted as specified. However, the body of the network may be cemented to the printed circuit board. The cement material shall not extend up the body more than 50 percent in the vertical plane or beyond the resistor ends in the horizontal plane. In no case shall the resistor body be completely encapsulated (see figure 3).

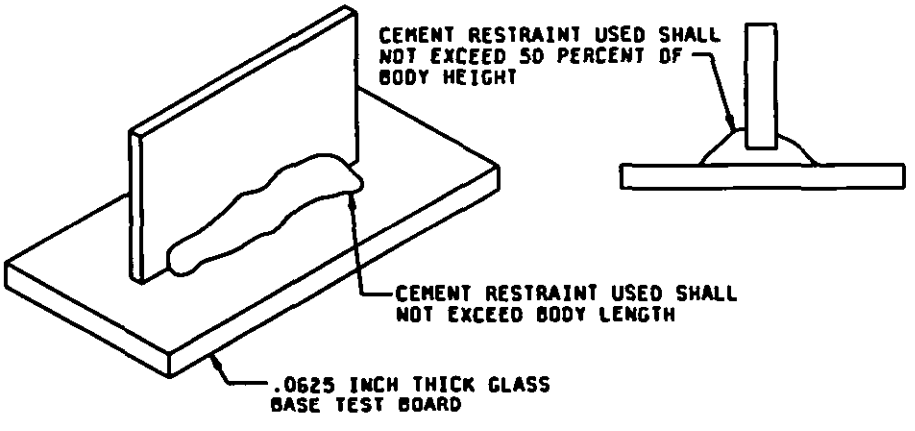

FIGURE 3. Special mounting for high profile SIPs.

Source: https://assist.dla.mil -- Downloaded: 2016-11-25T17:09Z
Check the source to verify that this is the current version before use.

b. Test leads: Test leads used during this test shall be no larger than AWG size 22 stranded wire, so that the influence of the test lead on the resistor shall be held to a minimum. The test-lead length shall be no longer than necessary.

c. Measurements before shock: Resistance shall be measured as specified in 4.8.5.

d. Test condition I.

e. Measurements after shock: Resistance shall be measured as specified in 4.8.5.

f. Inspection after shock: Networks shall be inspected for evidence of mechanical damage.

4.8.17 Vibration, high frequency (see 3.22). Networks shall be tested in accordance with method 204 of MIL-STD-202. The following details and exception shall apply:

a. Mounting: As specified in 4.8.16a.

b. Test leads: As specified in 4.8.16b.

c. Measurements before vibration: As specified in 4.8.16c.

d. Test condition D.

e. Measurements after vibration: As specified in 4.8.16e.

f. Inspection after vibration: Networks shall be inspected for evidence of mechanical damage.

4.8.18 Life (see 3.23). Networks shall be tested in accordance with method 108 of MIL-STD-202. The following detail and exceptions shall apply:

a. Mounting: As specified 4.8.1.1, with wiring to be connected to landing pads on the top and bottom of the circuit board. If forced air circulation is employed, the air velocity shall not exceed 500 feet per minute and there shall be no direct impingement of the forced-air supply upon the networks.

b. Test temperature and tolerance; 70°C ±5°C.
25°C power rating; 25°C ±5°C (qualification inspection).

c. Initial measurements: Measurements may be made inside the or outside the chamber.

(1) Inside chamber: When measurements are to be made inside the chamber, the initial dc resistance shall be measured at the applicable test temperature, after temperature stabilization, and within 8 hours of exposure of the resistor networks to the test temperature. This initial measurement shall be used as the reference temperature for all subsequent measurements under the same condition.

Source: https://assist.dla.mil -- Downloaded: 2016-11-25T17:09Z
Check the source to verify that this is the current version before use.

(2) Outside chamber: When measurements are to be made outside the chamber, the initial dc resistance shall be measured at the room temperature. This initial measurement shall be used as the reference temperature for all subsequent measurements under the same condition.

d. Operating conditions: Rated dc continuous working voltage, filtered or nonfiltered full-wave rectified ac voltage shall be simultaneously applied to each resistor in the network intermittently, 1.5 hours on and 0.5 hour off, for the specified number of hours and at the test temperature. During the "on" cycle, the voltage shall be regulated and controlled to maintain the rated continuous working voltage ±5 percent. In no case shall the network power rating be exceeded.

e. Test condition: 1,000 hours total test time.

f. Measurements during test;

(1) DC resistance shall be measured at the end of the 0.5 hour off periods after 250 +72, -24; 500 +72, -24; and 1,000 +72, -24 hours. Measurements shall be made as possible to the specified time but may be adjusted (with specified tolerances) so that measurements need be made only during the normal workday.

(2) Measurements outside of chamber: When measurements are made outside the chamber, networks shall be outside of the chamber for a minimum of 45 minutes and stabilized before measurements.

g. Inspection after test: Networks shall be inspected for evidence of mechanical damage.

4.8.19 High temperature exposure (see 3.24).

a. Mounting: Not required.

b. Initial measurements: DC resistance shall be measured as specified in 4.8.5.

c. Procedure: Following initial resistance measurements, networks shall be placed in a chamber with forced air circulation maintained at 125°C ±5°C for a period of 100 ±4 hours with no load applied.

d. Final measurements: After removal from the test chamber, networks shall be permitted to stabilize at an ambient temperature of 25°C ±5°C and within 6 hours. DC resistance measurements shall be made as specified in 4.8.5. Networks shall be inspected for evidence of mechanical damage.

4.8.20 Low temperature storage (see 3.25).

a. Mounting : Not required.

Source: https://assist.dla.mil -- Downloaded: 2016-11-25T17:09Z
Check the source to verify that this is the current version before use.

b. Procedure: DC resistance shall be measured as specified in 4.8.5. Within 1 hour after this measurement, the networks shall be placed in a cold chamber at -65°C +0°C, -3°C. Twenty-four hours after the networks have reached this temperature, the temperature of the chamber shall be gradually increased to room temperature within a period of not more than 8 hours. The networks shall be removed from the chamber and maintained at a temperature of 25°C ±5°C for a period of approximately 24 hours; the dc resistance shall then again be measured as specified in 4.8.5. Networks shall then be inspected for evidence of mechanical damage.

4.8.21 Hermetic seal (applicable to characteristics C and Y) (see 3.10). Networks shall be tested in accordance with method 112 of MIL-STD-202. The following details shall apply:

a. Test condition C, procedure 111a or 111b of method 112, MIL-STD-202 shall be used.

b. Gross leak test: Test condition D.

4.8.22 Fungus (see 3.26). Networks shall be tested in accordance with method 508 of MIL-STD-810. Networks shall be inspected for evidence of fungus.

5. PACKAGING

5.1 Packaging. For acquisition purposes, the packaging requirements shall be as specified in the contract or order (see 6.2). When actual packaging of material is to be performed by DoD personnel these personnel need to contact the responsible packaging activity to ascertain requisite packaging requirements. Packaging requirements are maintained by the Inventory Control Point's packaging activity within the Military Department or Defense Agency, or within the Military Department's System Command. Packaging data retrieval is available from the managing Military Department's or Defense Agency's automated packaging files, CD-ROM products, or by contacting the responsible packaging activity.

6. NOTES

(This section contains information of a general or explanatory nature that may be helpful, but is not mandatory.)

6.1 Intended use. Networks described herein are intended to be used in electronic circuits where miniaturization is required.

6.2 Acquisition requirements. Acquisition documents must specify the following:

a. Title, number, and date of this specification, applicable associated specification, and the complete PIN (see 1.2.1).

b. Issue of DoDISS to be cited in the solicitation, and if required, the specific issue of individual documents referenced (see 2.1).

c. Allowable substitution (see 3.27.1).

d. Packaging requirements.

Source: https://assist.dla.mil -- Downloaded: 2016-11-25T17:09Z
Check the source to verify that this is the current version before use.

6.2.1 Retinning (hot solder dip) leads. If retinning (hot solder dip) of the leads is required, see 3.4.6.

6.3 Qualification. With respect to products requiring qualification, awards will be made only for products which are, at the time of award of contract, qualified for inclusion in the applicable QPL whether or not such products have actually been so listed by the date. The attention of the contractors is called to these requirements, and manufacturers are urged to arrange to have the products that they propose to offer to the Federal Government tested for qualification in order that they may be eligible to be awarded contracts or purchase orders for the products cover by this specification. The activity responsible for the QPL and, information pertaining to qualification of products may be obtained from the Defense Electronic Supply Center (DESC-EL), 1507 Wilmington Pike, Dayton , Ohio 45444-5765.

6.4 Application notes.

6.4.1 Stacking of networks. Stacking is generally not recommend, but if required, care should be taken to compensate for the lower heat dissipation capabilities by derating the wattage rating.

6.4.2 Close-tolerance networks. Close-tolerance networks (i.e., ±0.1 percent and tighter) should be mounted by a method which produces the least heating effect over a short time to avoid permanent change in resistance.

6.4.3 Caution note. When the printed wiring assembly utilizes components made of brittle materials (glass or ceramic), such components should be protected, prior to coating, against breakage by the conformal coating type covering the component with transparent, clean, thin, pliant buffer material securely fitted, such as with heat shrinkable sleeving, polyethylene terephthalate covered by MIL-I-23053/7. The buffer material should cover the entire component and should not extend over the component by more than .062 inch (1.57 mm) and should be compatible with the conformal coating material. Buffer material may not be needed when types SR and XY in accordance with MIL-I-46058 are used.

6.4.3.1 Tin plating finishes. Use of tin plating is prohibited (see 3.4.6). Use of tin finishes can result in the tin whisker growth. Tin whisker growth can result in adverse effects on the operation of electronic equipment systems. For additional information on this matter, refer to ASTM B545 .

6.5 Power ratings at 25°C (see 3.23.1). Power rating for networks under this specification have been established by a 1,000-hour life test.

Characteristic	Delta R	Resistance ratio
C, R and V	±(0.1 percent +0.01 ohm)	±0.03 percent
H and K	±(0.5 percent +0.01 ohm)	- - - - - - -
M	±(2.0 percent +0.01 ohm)	- - - - - - -
Y	±(0.05 percent +0.01 ohm)	±0.025 percent

The power ratings established should be in accordance with figure 2.

Source: https://assist.dla.mil -- Downloaded: 2016-11-25T17:09Z
Check the source to verify that this is the current version before use.

6.6 Supersession data.

6.6.1 Resistance designations. *Prior to MIL-R-83401B, dated 1 March 1976, a three-digit resistance* designation was used for resistance tolerances of ±2 percent and ±5 percent. Networks specified with a ±2 percent or ±5 percent resistance tolerance using the four-digit resistance designation required by this specification supersede and are interchangeable with the ±2 percent and ±5 percent resistors using the *three-digit resistance designation provided* the resistors have the same resistance value, tolerance, style, and performance characteristic. The supersession of the three-digit resistance designation by the four-digit resistance designation are as indicated in table XIX.

TABLE XIX. Resistance designations for 2 and 5 percent networks.

Resistance designations		Resistance
Four digits	Three digits 1/	Megohms
10R0 to 91R0 inclusive	100 to 910 inclusive	10.0 to 91.0 inclusive
1000 to 9100 inclusive	101 to 911 inclusive	100 to 910 inclusive
1001 to 9101 inclusive	102 to 912 inclusive	1,000 to 9,100 inclusive
1002 to 9102 inclusive	103 to 913 inclusive	10,000 to 91,000 inclusive
1003 to 9103 inclusive	104 to 914 inclusive	0.1 to .91 inclusive
1004 to 9104 inclusive	105 to 915 inclusive	1.0 to 9.1 inclusive

1/ Three-digit resistance designations used prior to MIL-R-83401B, dated 1 March 1976.

6.7 Subject term (key word) listing.

DIP
Flat pack
SIP

6.8 Changes from previous issue. Marginal notations are not used in this revision to identify changes with respect to the previous issue due to the extent of the changes.

Source: https://assist.dla.mil -- Downloaded: 2016-11-25T17:09Z
Check the source to verify that this is the current version before use.

APPENDIX A

PROCEDURE FOR QUALIFICATION INSPECTION

A.1 SCOPE

A.1.1 Scope. This appendix details the procedure for submission of samples, for qualification inspection of networks covered by this specification. The procedure for extending qualification of the required sample to other networks covered by this specification is also outlined herein. This appendix is a mandatory part of the specification. The information contained herein is intended for compliance.

A.2 APPLICABLE DOCUMENTS

This section is not applicable to this appendix.

A.3 SUBMISSION

A.3.1 Sample. This submission procedure prescribes qualification to the "M" level part number. "C" level qualification is predicated on successful "M" level qualification as described under the Extent of Qualification procedure (see A.4.2). A sample consisting of 60 sample units of each resistance value (lowest, highest, and critical or nearest to critical value (see table XX)) and in each style, characteristic, resistance tolerance, and schematic for which qualification is sought, shall be submitted and subjected to the inspection of table XII. Five sample units of any value shall be submitted and subjected to the test of group Ib of table XII. Twelve sample units of any value shall be submitted and subjected to the test of group II of table XII. In addition, 10 sample units of any characteristic or resistance value shall be submitted and subjected to the test of group VIII of table XII. (Note: If fungus testing is certified, no sample units are required for group VIII.) The range extension at higher or lower values will be qualified by supplemental testing of the new highest or lowest value in accordance with the following: Submit 60 additional samples of new resistance value to be qualified to groups I and IA of table XII; of this group, 10 samples shall be subjected to group III, 10 samples to group IV, 10 samples to group V, 10 samples to group VI, 10 samples to group VIa, 10 samples to group VII. An additional sample submission is required under the following conditions:

a. Qualification to closer tolerance than submitted above is desired:

Submit:	
30 additional samples of the closer tolerance. To be qualified to group I, of table XII .	10 high value 10 critical value 10 low value

b. Qualification to "H" or "J" schematics by schematic A, B, C, or G submission is desired:

Submit:	
40 additional samples of schematic "H" or "J". All to group I, and 10 each to groups III, IV, VI, and VII.	40 highest value

Source: https://assist.dla.mil -- Downloaded: 2016-11-25T17:09Z
Check the source to verify that this is the current version before use.

APPENDIX A

After qualification has been granted, no changes shall be made in materials, design, or construction without proper notification to the qualifying activity.

TABLE XX. Critical resistance value for qualification inspection. 1/

Style	Critical resistance value 2/											
	Schematic A		Schematic B		Schematic C		Schematic G		Schematic H		Schematic J	
	Characteristics											
	C,R,V,Y	H,K,M	C,R,V,Y	H,K,M	C,R,V,Y	H,K,M	C,R,V,Y	H,K,M	C,R,V,Y	H,K,M	C,R,V,Y	H,K,M
	MΩ	MΩ	MΩ	MΩ	MΩ	MΩ	MΩ	MΩ	MΩ	MΩ	MΩ	MΩ
RZ010	0.1	0.047	0.2	0.1							0.390	0.200
RZ020	0.1	0.047	0.2	0.1							0.390	0.200
RZ030	0.047	0.047	0.1	0.1							0.160	0.160
RZ040					0.024	0.012	0.024	0.012	0.039	0.020		
RZ050					0.024	0.012	0.024	0.012	0.039	0.020		
RZ060					0.024	0.012	0.024	0.012	0.039	0.020		
RZ070					0.039	0.020	0.039	0.020	0.062	0.033		
RZ080					0.039	0.020	0.039	0.020	0.062	0.033		
RZ090					0.039	0.020	0.039	0.020	0.062	0.033		
RZ100	0.047	0.047	0.1	0.1							0.160	0.160
RZ130	0.1	0.047	0.2	0.1							0.390	0.200
RZ140	0.1	0.047	0.2	0.1							0.390	0.200
RZ150	0.047	0.047	0.1	0.1							0.160	0.160
RZ160					0.024	0.012	0.024	0.012	0.039	0.020		
RZ170					0.024	0.012	0.024	0.012	0.039	0.020		
RZ180									0.062	0.033		
RZ190									0.062	0.033		
RZ200					0.024	0.012	0.024	0.012	0.039	0.020		
RZ210					0.039	0.020	0.039	0.020	0.062	0.033		
RZ220					0.039	0.020	0.039	0.020	0.062	0.033		
RZ230					0.039	0.020	0.039	0.020	0.062	0.033		
RZ240					0.039	0.020	0.039	0.020	0.062	0.033		

1/ Maximum continuous working voltage shall be applied (see 3.1).
2/ The critical resistance value is the maximum standard resistance value which will dissipate full wattage when the maximum continuous working voltage is applied.

Source: https://assist.dla.mil -- Downloaded: 2016-11-25T17:09Z
Check the source to verify that this is the current version before use.

A.4 EXTENT OF QUALIFICATION

A.4.1 Extension of qualification. The resistance range included in the qualification of any one network style will be between the lowest and highest resistance values which pass the qualification inspection (see 3.1). Qualification of one characteristic is basis for qualification of another characteristic, as indicated in table XXI. Qualification of the lower resistance tolerances will qualify for the higher resistance tolerances in accordance with table XXII. Extent of qualification by style shall be in accordance with table XXIII. Extent of qualification by schematic shall be in accordance with table XXIV. As a requisite for extension of qualification as described herein between characteristics, tolerances, schematics, and resistance values, the product involved must be manufactured using the same facilities, processes, and materials as the product originally submitted for qualification.

A.4.2 Extension of qualification from "M" to "C" level part numbers. Qualification of the "C" level part number is predicted upon qualification of the "M" level part number as described in this appendix. Upon request by the manufacturer, qualification to the "C" level part numbers will be granted for the envelope of products successfully qualified to the "M" level part numbers. The products involved must be of the same design, manufactured using the same facilities, processes, and materials as the product originally submitted for and qualified under the "M" level.

TABLE XXI. Extent of qualification of characteristics.

Characteristic submitted	Characteristic qualified
C	C, V
H	H, K, M
K	K, M
M	M
R	R, V
V	V
Y	C, R, V, Y

TABLE XXII. Extent of qualification of resistance tolerance.

Resistance tolerance submitted	Resistance tolerance qualified
A	A, B, D, F
B	B, D, F, G, J
D	D, F, G, J
F	F, G, J
G	G, J
J	J
T	T, A, B, D, F
V	V, T, A, B, D, F

Source: https://assist.dla.mil -- Downloaded: 2016-11-25T17:09Z
Check the source to verify that this is the current version before use.

APPENDIX A

TABLE XXIII. Extent of qualification by style.

Style	Will qualify style(s)
RZ010	RZ010
RZ020	RZ010, RZ020
RZ030	RZ030
RZ040	RZ040
RZ050	RZ040, RZ050
RZ060	RZ040, RZ050, RZ060
RZ070	RZ070
RZ080	RZ070, RZ080
RZ090	RZ070, RZ080, RZ090, RZ240
RZ100	RZ030, RZ100
RZ130	RZ010, RZ130
RZ140	RZ010, RZ020, RZ130, RZ140
RZ150	RZ030, RZ150
RZ160	RZ040, RZ160
RZ170	RZ040, RZ050, RZ160, RZ170
RZ180	RZ180
RZ190	RZ190
RZ200	RZ040, RZ050, RZ060, RZ160, RZ170, RZ200
RZ210	RZ070, RZ210
RZ220	RZ070, RZ210, RZ220
RZ230	RZ070, RZ080, RZ210, RZ220, RZ230
RZ240	RZ070, RZ080, RZ090, RZ240

TABLE XXIV. Extent of qualification by schematic.

Schematic	Will qualify schematic(s) 1/
A	A, J
B	B, A, J
C	C, G, H
G	G, H

1/ When H or J schematic are included, additional test samples must be tested as specified A.3.1b.

Source: https://assist.dla.mil -- Downloaded: 2016-11-25T17:09Z
Check the source to verify that this is the current version before use.

PROCEDURE SPECIFYING ADDITIONAL SCHEMATICS

SCHEMATIC X

B.1 SCOPE

B.1 Scope. This appendix details the procedure to be followed to include additional schematics to this specification. These new schematics will be incorporated in the applicable associated specification as a "schematic x". This appendix is a mandatory part of the specification. The information contained herein is intended for compliance.

B.2 APPLICABLE DOCUMENTS

This section is not applicable to this appendix.

B.3 *REQUIREMENTS*

B.3.1 Procedure for submission of schematics. Resistor networks with schematics other than those currently listed in the current specification should be submitted to DESC-ELDM. The usage record of the particular schematic will be researched, and if the schematic has been used previously on any military equipment, the schematic will be included in the applicable existing associated specification or a new associated specification. If no previous use of the schematic is found, then the information will be included in the usage record.

B.3.2 Extension of qualification for schematic. Qualification will be extended to the new schematics based on *qualification of*:

a. Schematic B for resistor networks in DIP packages and flat packs.

b. Schematic C for SIP packages.

Source: https://assist.dla.mil -- Downloaded: 2016-11-25T17:09Z
Check the source to verify that this is the current version before use.

CONCLUDING MATERIAL

Custodians:
Army - ER
Navy - EC
Air Force - 85
NASA - NA

Review activities:
Army - AR, AT, AV, ME, MI
Navy - AS, CG, MC, OS
Air Force - 17, 19

Preparing activity:
DLA - ES

(Project 59GP-0146)

Source: https://assist.dla.mil -- Downloaded: 2016-11-25T17:09Z
Check the source to verify that this is the current version before use.

STANDARDIZATION DOCUMENT IMPROVEMENT PROPOSAL

INSTRUCTIONS

1. The preparing activity must complete blocks 1, 2, 3, and 8. In block 1, both the document number and revision letter should be given.

2. The submitter of this form must complete blocks 4, 5, 6, and 7.

3. The preparing activity must provide a reply within 30 days from receipt of the form.

NOTE: This form may not be used to request copies of documents, nor to request waivers, or clarification of requirements on current contracts. Comments submitted on this form do not constitute or imply authorization to waive any portion of the referenced document(s) or to amend contractual requirements.

I RECOMMEND A CHANGE:	1. DOCUMENT NUMBER MIL-PRF-83401G	2. DOCUMENT DATE (YYMMDD)

3. DOCUMENT TITLE
RESISTOR NETWORKS, FIXED, FILM, AND CAPACITOR-RESISTOR NETWORKS, CERAMIC CAPACITOR AND FIXED FILM RESISTORS, GENERAL SPECIFICATION FOR

4. NATURE OF CHANGE (Identify paragraph number and include proposed rewrite, if possible. Attach extra sheets as needed.)

5. REASON FOR RECOMMENDATION

6. SUBMITTER

a. NAME (Last, First, Middle Initial)	b. ORGANIZATION	
c. ADDRESS (Include Zip Code)	d. TELEPHONE (Include Area Code) (1) Commercial (2) AUTOVON (If applicable)	e. DATE SUBMITTED (YYMMDD)

8. PREPARING ACTIVITY

a. NAME Defense Electronics Supply Center, ATTN: DESC-ELDM	b. TELEPHONE (Include Area Code) (1) Commercial: 513-296-5257 (2) AUTOVON: DSN 986-5257
c. ADDRESS (Include Zip Code) 1507 Wilmington Pike Dayton, OH 45444-5765	**IF YOU DO NOT RECEIVE A REPLY WITHIN 45 DAYS, CONTACT:** Defense Quality and Standardization Office 5203 Leesburg Pike, Suite 1403, Falls Church, VA 22041-3466 Telephone (703) 756-2340 AUTOVON 289-2340

Source: https://assist.dla.mil -- Downloaded: 2016-11-25T17:09Z
Check the source to verify that this is the current version before use.