MIL-C-26482G
5 SEPTEMBER 1975
SUPERSEDING
MIL-C-0026482F(NAVY)
1 April 1971 and
MIL-C-26482E
29 May 1969

MILITARY SPECIFICATION

CONNECTORS, ELECTRICAL, (CIRCULAR, MINIATURE, QUICK DISCONNECT, ENVIRONMENT RESISTING), RECEPTACLES AND PLUGS, GENERAL SPECIFICATION FOR

This specification is approved for use by all Departments and Agencies of the Department of Defense.

1. SCOPE

1.1 Scope. This specification covers the general requirements for two series of environment resisting, quick disconnect, miniature, circular electrical connectors (and accessories). Each series contains hermetic receptacles. The two series of connectors are intermateable when using power contacts and are not intermateable when using shielded contacts. When intermated, the minimum performance requirement for series 1 connectors will be met.

1.1 1 Series description. The connectors are identified as series 1 or 2 and are designed to provide contact protection during mating.

(a) Series 1 - Connector, bayonet coupling, solder or front release crimp removable contacts (125°C). Series 1, hermetic are also available. (See 6.1 for intended use.)
(b) Series 2 - Connector, bayonet coupling, rear release crimp removable contacts (200°C). Series 2, hermetic connectors are available with nonremovable solder type contacts or crimp removable terminations. (See 6.2 for intended use.) (MIL-C-83723/1 through /14 and MIL-C-83723/36 through /49 must meet the performance requirements of series 2.)

1.2 Classification

1 2.1 MS part number Unless otherwise specified. the MS part number for qualified connectors procured in accordance with this specification shall be in the following form, and as specified (see 3.1)

MS3114	E	12	*	10	A	P	W
MS no. (See supplement)	Class (1.2.1.1)	Shell size (1.2.1.2)	Termination and shell material (1.2.1.3)	Insert arrangement (1.2.1.4)	Insert arrangement for shielded contacts (see 3.1) omit if not applicable	Contact style (1.2.1.5)	Insert position (1.2.1.6)

* For hermetic receptacles only.

1.2.1.1 Class. The class and series of connectors shall be identified as shown in table I.

FSC 5935

Source: https://assist.dla.mil -- Downloaded: 2016-11-16T06:23Z
Check the source to verify that this is the current version before use.

TABLE I. Connector class and series.

Class	Series 1 (125°C)		Series 2 (200°C)	
	Solder	Front release crimp removable contacts	Solder	Rear release crimp removable contacts
A-Grommet seal, nonconductive				X
E-Grommet seal, conductive	X	X		
P-Potted seal, conductive	X	X		
H-Hermetic seal, conductive	X		X	
J-Insert seal with gland seal for jacketed cable, conductive	X			
1/ L, R-Fluid resistant, conductive				X
N-Hermetic seal, crimp termination, conductive				X
F-Grommet seal with strain relief clamp, conductive	X	X		

1/ Class L is upgraded to 200°C and replaces class E, series 2, rear release, crimp removable contacts. Class R is inactive for new design.

1.2.1.2 Shell size. Shell sizes shall be as specified on the applicable MS standard.

1.2.1.3 Termination type and shell material (hermetic receptacles only). The type of termination and shell material shall be designated as follows:

Type A - Solder cup termination - stainless steel shell (series 1).
Type B - Eyelet termination - stainless steel shell (series 1).
Type C - Solder cup termination - ferrous alloy shell (series 1 and 2).
Type D - Crimp termination - ferrous alloy shell (series 2).
Type Y - Eyelet termination - ferrous alloy shell (series 1).

1.2.1.4 Insert arrangement. The insert arrangement showing quantity, size, service rating, and positional location of contacts shall be as specified in MIL-STD-1669.

1.2.1.5 Contact style. The following designators are used to indicate a full complement of applicable contacts (see 3.4.1).

P - Pin contacts
S - Socket contacts
C - Feedthrough contacts

1.2.1.6 Insert position. The insert position is the angular position of the insert relative to the master key or keyway of the shell. Insert positions other than normal shall be indicated by the letter shown on the insert arrangements specified in MIL-STD-1669.

1.2.2 Military part number. The military part number for qualified MIL-C-83723, series 1 connectors procured in accordance with this specification shall conform to the issue in effect of MIL-C-83723 and 1.2 1 herein (see 3.7.4 for identification).

1.3 Temperature.

1.3.1 Temperature (series 1). Series 1 connectors are rated for specified operation within a temperature range of -55°C (-67°F) to 125°F (257°F). The upper temperature is the maximum internal hot spot temperature resulting from any combination of electrical load and ambient temperature.

Source: https://assist.dla.mil -- Downloaded: 2016-11-16T06:23Z
Check the source to verify that this is the current version before use.

1.3.1.1 Insulation resistance (series 1). Insulation resistance varies with temperature as follows (see figure 1A):

Hot spot temperature	Minimum insulation resistance
25°C (77°F)	5,000 megohms
105°C (221°F)	12 megohms
125°C (257°F)	3 megohms

1.3.1.2 Service life (series 1). Service life varies with temperature as follows (see figure 1B):

Hot spot temperature	Service life
25°C (77°F)	continuous
105°C (221°F)	1,000 hours
125°C (257°F)	250 hours

1.3.2 Temperature (series 2). Series 2 connectors are capable of specified operation within a temperature range of -55°C (-67°F) to 200°C (392°F) under any combination of electrical load and ambient temperature. These connectors are rated for specified operation for 1,000 hours, at 200°C maximum internal hot spot temperature.

1.3.2.1 Insulation resistance (series 2). Insulation resistance limits vary with temperature as follows (see figure 2A):

Hot spot temperature	Minimum insulation resistance
25°C (77°F)	5,000 megohms
200°C (392°F)	500 megohms

1.3.2.2 Service life (series 2). Service life varies with temperature as follows (see figure 2B):

Hot spot temperature	Service life
25°C (77°F)	continuous
200°C (392°F)	1,000 hours

1.4 Wire range accommodations. The wire range given in table II shall be accommodated by series 1 and series 2 connectors as indicated.

TABLE II. Wire range accommodations.

Wire barrel size	Wire size	OD of finished wire, inch 1/			
		Series 1		Series 2	
		Min	Max	Min	Max
20	24 22 20	.047 2/	.083	.040	.083
16	20 18 16	.066	.109	.053	.103
12	14 12	.097	.142	.097	.158

1/ Wire reference - MIL-W-22759.

2/ Minimum OD for solder contact connectors is .060 inch.

Source: https://assist.dla.mil -- Downloaded: 2016-11-16T06:23Z
Check the source to verify that this is the current version before use.

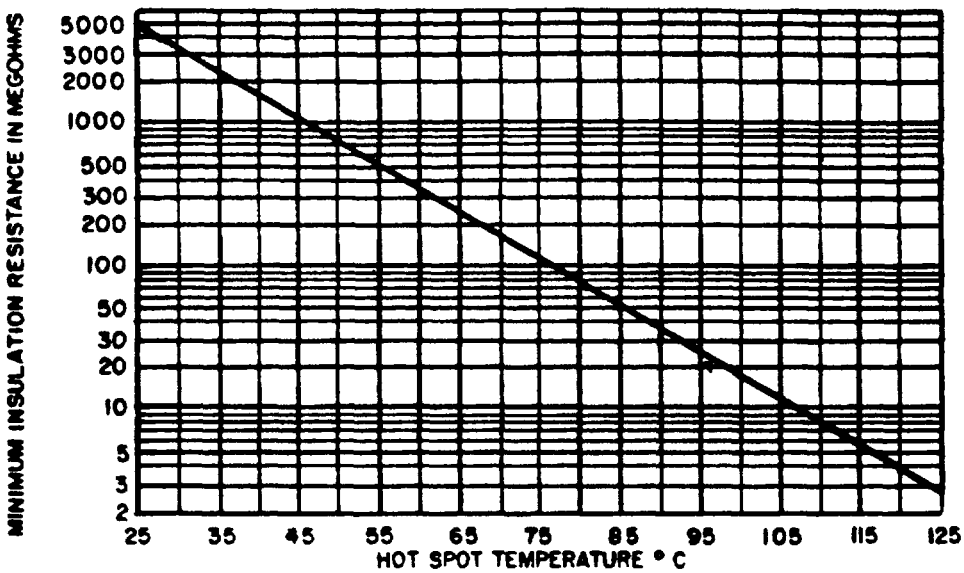

FIGURE 1A. Minimum insulation resistance vs hot spot temperature.

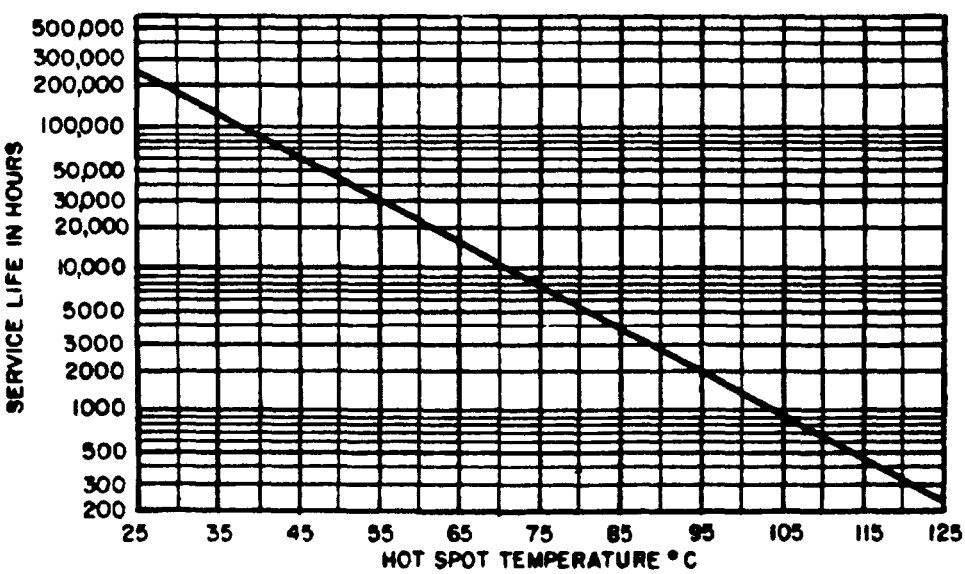

FIGURE 1B. Service life vs hot spot temperature.

FIGURE 1. Insulation resistance and service life vs temperature (series 1).

Source: https://assist.dla.mil -- Downloaded: 2016-11-16T06:23Z
Check the source to verify that this is the current version before use.

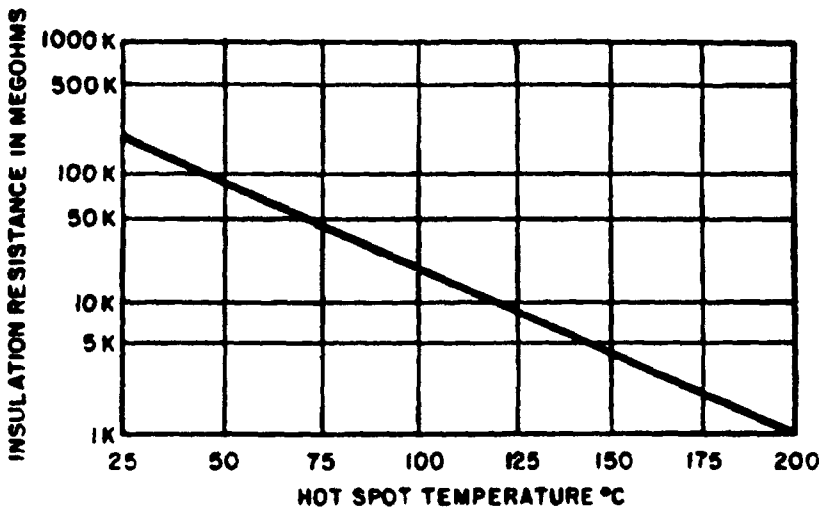

FIGURE 2A. Typical insulation resistance vs hot spot temperature.

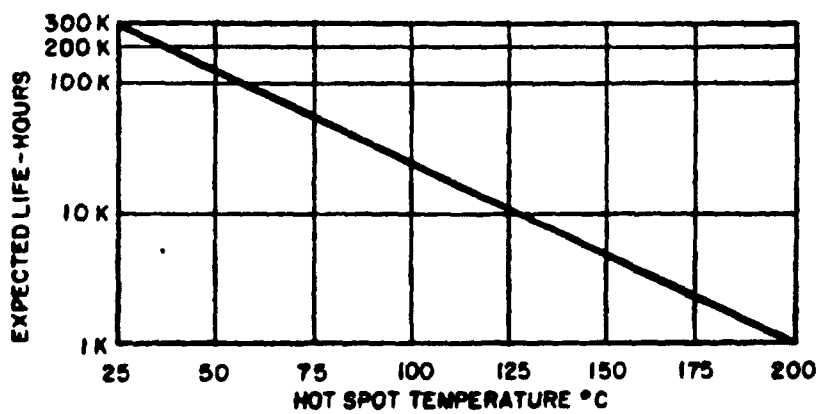

FIGURE 2B. Service life vs hot spot temperature.

FIGURE 2. Insulation resistance and service life vs temperature (series 2).

Source: https://assist.dla.mil -- Downloaded: 2016-11-16T06:23Z
Check the source to verify that this is the current version before use.

2. APPLICABLE DOCUMENTS

2.1 The following documents of the issue in effect on date of invitation for bids or request for proposal form a part of this specification to the extent specified herein:

SPECIFICATIONS

FEDERAL

L-P-395	-	Plastic Molding (And Extrusion) Material, Nylon, Glass Fiber Reinforced.
QQ-A-591	-	Aluminum Alloy Die Castings.
QQ-N-290	-	Nickel Plating (Electrodeposited).
QQ-P-35	-	Passivation Treatments For Corrosion-Resisting Steel.
QQ-P-416	-	Plating, Cadmium (Electrodeposited).
QQ-S-571	-	Solder, Tin Alloy: Tin Lead Alloy; And Lead Alloy.

MILITARY

MIL-M-14	-	Molding Plastics And Molded Plastic Parts, Thermosetting
MIL-G-3056	-	Gasoline, Automotive, Combat.
MIL-H-5606	-	Hydraulic Fluid, Petroleum Base, Aircraft, Missile and Ordnance.
MIL-T-5624	-	Turbine Fuel, Aviation, Grades JP-4 and JP-5.
MIL-L-7808	-	Lubricating Oil, Aircraft Turbine Engine, Synthetic Base.
MIL-A-8243	-	Anti-icing and Deicing-Defrosting Fluid.
MIL-S-8516	-	Sealing Compound, Polysulfide Rubber, Electric Connectors and Electric Systems, Chemically Cured.
MIL-T-10727	-	Tin Plating, Electrodeposited or Hot-Dipped, for Ferrous and Nonferrous Metals.
MIL-F-14072	-	Finishes for Ground Signal Equipment.
MIL-I-17214	-	Indicator, Permeability; Low-Mu (Go-No-Go).
MIL-M-20693	-	Molding Plastic, Polyamide (Nylon), Rigid.
MIL-C-22520	-	Crimping Tools, Terminal, Hand, Wire Termination, General Specification for.
MIL-W-22759	-	Wire, Electric, Fluoropolymer-Insulated, Copper or Copper Alloy
MIL-C-23216	-	Contacts, Electric Connector, General Specification for
MIL-L-23699	-	Lubricating Oil, Aircraft Turbine Engines, Synthetic Base.
MIL-C-25769	-	Cleaning Compound, Aircraft Surface, Alkaline Waterbase.
MIL-C-39029/4	-	Contacts, Electric, Pin, Crimp Removable, Composition A
MIL-C-39029/5	-	Contacts, Electric, Socket, Crimp Removable, Composition A.
MIL-C-39029/7	-	Contacts, Electric, Connector, Pin, Crimp Removable, Composition D, Type 3 (200°C), Shielded Cable Applications, Size 12.
MIL-C-39029/8	-	Contacts, Electric, Connector, Socket, Crimp Removable, Composition D, Type 3 (200°C), Shielded Cable Applications, Size 12.
MIL-C-39029/9	-	Contacts, Electric, Pin, Crimp Removable, Composition C, Thermocouple.
MIL-C-39029/10	-	Contacts, Electric, Socket, Crimp Removable, Composition C, Thermocouple.
MIL-C-39029/15	-	Contacts, Electric, Socket, Crimp Removable, Composition A.

Source: https://assist.dla.mil -- Downloaded: 2016-11-16T06:23Z
Check the source to verify that this is the current version before use.

SPECIFICATIONS

MILITARY - Continued

MIL-C-39029/23	-	Contacts, Electric, Pin, Shielded, Crimp, Removable (Size 8).
MIL-C-39029/24	-	Contacts, Electric, Socket, Shielded, Crimp, Removable (Size 8).
MIL-C-39029/25	-	Contacts, Electric, Pin, Shielded, Crimp, Removable, Composition A, 200°C (Size 12).
MIL-C-39029/26	-	Contacts, Electric, Socket, Shielded, Crimp, Removable (Size 12).
MIL-G-45204	-	Gold Plating, Electrodeposited.
MIL-C-45662	-	Calibration System Requirements.
MIL-P-46133	-	Plastic Molding and Extrusion Material, Poly (Aryl Sulfone Ether) Resin, Thermoplastic.
MIL-C-55330	-	Connectors, Preparation for Delivery of.

STANDARDS

MILITARY

MIL-STD-105	-	Sampling Procedures and Table for Inspection by Attributes.
MIL-STD-202	-	Test Methods for Electronic and Electrical Component Parts.
MIL-STD-454	-	Standard General Requirements for Electronic Equipment.
MIL-STD-1285	-	Marking of Electrical and Electronic Parts.
MIL-STD-1344	-	Test Methods for Electrical Connectors.
MIL-STD-1669	-	Insert Arrangements for MIL-C-26482 Environment Resisting, Circular Electrical Connectors
MS3112	-	Connectors, Electrical, (Circular, Miniature, Quick Disconnect, Environment Resisting), Receptacle, (Box Mounting Flange, Bayonet Coupling, Solder Contact), (Series 1).
MS3119	-	Connectors, Electrical, (Circular, Miniature, Quick Disconnect, Environment Resisting), Receptacle, (Thru-Bulkhead Mounting Flange, Bayonet Coupling), (Series 1).
MS3122	-	Connectors, Receptacle, Electric, Crimp-Type, Box Mounting, Flange, No. 4 Holes, Bayonet Coupling.
MS3127	-	Connectors, Receptacle, Electric, Crimp-Type, Box Mounting, Flange, No. 4/6 Holes, Bayonet Coupling.
MS3155	-	Connector, Electric, Rear Accessory Design Standard
MS3187	-	Plug, Sealing, For MIL-C-26482 and MIL-C-81703 (Navy) Electrical Connectors.
MS3192	-	Contacts, Pin, Electric, Crimp, Removable.
MS3193	-	Contacts, Socket, Electric, Crimp Removable.
MS3197	-	Gage Pin, for Socket Contact Engagement Test.
MS3448	-	Tool, Extract, Unwired Contact, Electric Connector, Size 20, 16, and 12
MS3460	-	Test Gage, MIL-C-26482 Series 1 or MIL-C-81703 Series 2 Contact Retention Feature.
MS3461	-	Test Gage, MIL-C-26482 Series 2 or MIL-C-81703 Series 3 Contact Retention Feature.
MS3462	-	Test Gage, MIL-C-26482, Series 2 (Class N) or MIL-C-81703 Series 3 (Class N) Contact Retention Feature.

Source: https://assist.dla.mil -- Downloaded: 2016-11-16T06:23Z
Check the source to verify that this is the current version before use.

STANDARDS

MILITARY - Continued

MS24256	-	Tool, Contact, Connector, Assembly and Disassembly.
MS27488	-	Plug, Sealing, Electric Connector.
MS27534	-	Tool, Contact Insertion-Extraction, Electrical Connector.
MS90376	-	Caps, Dust, Plastic, Electric Connector.

(See supplement for associated list of specification sheets and military standards).

(Copies of specifications, standards, drawings, and publications required by suppliers in connection with specific procurement functions should be obtained from the procuring activity or as directed by the contracting officer.)

2.2 Other publications. The following documents form a part of this specification to the extent specified herein. Unless otherwise indicated, the issue in effect on date of invitation for bids or request for proposal shall apply.

NATIONAL BUREAU OF STANDARDS

H-28 HANDBOOK - Screw-Thread Standards for Federal Services.

(Applications for copies should be addressed to Superintendent of Documents, Government Printing Office, Washington, D.C. 20402.)

SD-6 - Provisions Governing Qualification.

(Applications for copies should be addressed to: Commanding Officer, Naval Publications and Forms Center, 5801 Tabor Avenue, Philadelphia, Pennsylvania 19120.)

AMERICAN NATIONAL STANDARDS INSTITUTE (ANSI)

ANSI B46.1-1962	-	Surface Texture (Surface Roughness, Waviness and Lay).
ANSI Y14.5-1973	-	Dimensioning and Tolerancing.
ANSI C83.1(RS-359)	-	Standard Colors for Color Identification and Coding.

(Applications for copies should be addressed to American Standards Institute, 1430 Broadway, New York, NY 10018)

3. REQUIREMENTS

3.1 MS standards. The individual item requirements shall be as specified herein and in accordance with the applicable MS standard. In the event of any conflict between the requirements of this specification and the MS standard, the latter shall govern.

3.2 Qualification. The connectors furnished under this specification shall be products which are qualified for listing on the applicable qualified products list at the time set for opening of bids (see 4.3 and 6.5).

3.2.1 Upon application for qualification testing, the qualifying activity shall verify that the manufacturer has established written procedures to assure actual connector performance to the requirements of this specification Emphasis shall be on the molded plastic retention system piece parts prior to assembly into the connector. These procedures shall contain

(a) Analysis of minimum/maximum dimensions of contacts and molded plastic retention discs

Source: https://assist.dla.mil -- Downloaded: 2016-11-16T06:23Z
Check the source to verify that this is the current version before use.

(b) Acceptable levels for.
  (1) Plastic mixtures and chemical tests.
  (2) Pureness of materials.
  (3) Flash control in plastic parts.
  (4) Method for flash removal.
(c) Contact retention tests on molded plastic retention disc based on analysis of (a).
(d) Insertion and removal forces for pin and socket contacts in plastic disc.

When approved by the qualifying activity, these shall become the minimum requirements for molded plastic contact retention systems prior to assembly into connectors for that manufacturer.

3.3 Materials. Materials which are not specified (see 3.1), or which are not specifically described herein shall be of the lightest practical weight and shall be suitable for the purpose intended.

3.3.1 Fungus resistance. Finishes and materials shall be certified that they meet the requirements of MIL-STD-454, requirement 4.

3.3.2 Dissimilar metals. When dissimilar metals are employed in intimate contact with each other, suitable protection against electrolytic corrosion shall be provided as specified in requirement 16 of MIL-STD-454.

3.3.3 Nonmagnetic materials (except classes H and N). The relative permeability of the connector assembly shall be less than 2.0 when measured with an indicator conforming to MIL-I-17214.

3.3.4 Contact material.

3.3.4.1 Series 1 (except class H). Contacts shall be made of suitably conductive materials. Hoods shall be made of passivated stainless steel. Springs shall be suitably protected or made from noncorrosive materials.

3.3.4.2 Classes H and N. Contacts shall be made of ferrous alloy or as specified. The materials used shall be compatible with the requirements of this specification.

3.3.5 Contact plating.

3.3 5.1 Series 1 (except class H). Nonremovable contacts shall be gold plated to a minimum of 50 microinches in accordance with MIL-G-45204, over nickel underplate per QQ-N-290, grade E (minimum). Gold plate shall be type 1, grade C, class 1 and of a hardness necessary to meet the performance requirements specified herein. Accessory members of the socket contacts need not be plated, but shall comply with the requirements for dissimilar metals specified in 3.3.2.

3.3.5.2 Series 1 and 2, class H.

3.3.5.2.1 Types A and B. Nonremovable contacts shall be gold plated to a minimum of 50 microinches in accordance with MIL-G-45204, over a nickel underplate per QQ-N-290, grade E (minimum)

3.3.5.2.2 Types C and Y. Contact plating for class H, types C and Y, shall be 50 microinches minimum of electrodeposited tin (no organic brightener) in accordance with MIL-T-10727. A preliminary plating of another metal is permissible.

3 3.6 RFI finger spring. RFI finger springs shall be made of a spring temper copper alloy suitably protected to prevent corrosion.

Source: https://assist.dla.mil -- Downloaded: 2016-11-16T06:23Z
Check the source to verify that this is the current version before use.

3.3.7 Dielectric materials.

3.3.7.1 Insert and grommet. Insert and grommet materials shall be high grade dielectric having hardness, electrical, and mechanical characteristic suitable for the purpose intended.

3.3.7.1.1 Rigid (except classes H and N). Rigid dielectric materials shall be in accordance with L-P-395, MIL-M-20693, MIL-M-14, or MIL-P-46133.

3.3.7.1.2 Rigid (classes H and N). The rigid dielectric materials in hermetic connectors shall be of a single piece of vitreous material.

3.3.7.1.3 Resilient. Resilient dielectric materials shall conform to the requirements specified herein. The resilient faces of series 1 and 2 connectors shall be designed so that the performance requirements are met when mated to counterpart connectors of either series 1 or 2.

3.3.7.1.4 Insert faces (series 1). Insert faces or blankets to a minimum depth of 0.080 inch (0.033 inch on class H) shall be resilient within a Shore A range of 35-85 for crimp contact connectors and class H connectors and 65-85 for solder contact connectors.

3.3.7.1.5 Pin insert faces (series 2). Pin insert faces shall be resilient within a Shore A range of 30 to 55.

3.3.8 Potting form (series 1). Potting forms shall be made of translucent nylon. The form shall incorporate a means for attachment to the connector.

3.3.9 Material and finish for shells, coupling rings and metallic accessories.

3.3.9.1 Series 1 (except class H). Shells, coupling rings, and protective covers shall be made of high grade aluminum alloys. Die castings, if used, shall conform to composition No. 13, 218, 380, or 384 (SC114A) of QQ-A-591.

3.3.9.2 Shells, coupling rings, and accessories (series 2). The materials used for shells and accessories shall be as specified (see 3.1).

3.3.9.3 Shells (classes H and N) Shell materials shall be as specified (see 3.1).

3.3.9.4 Finish (series 1 except class H). Aluminum parts and external screws shall be cadmium plated in accordance with type II, class 3 of QQ-P-416, except that a preliminary plating of another metal is permissible The resulting finish shall be olive drab (light to dark) and shall be electrically conductive.

3.3.9.4.1 Ferrous alloy (series 1, class H). Shells shall be tin plated in accordance with type 1 or 2 of MIL-T-10727. Preliminary plating of another metal is permissible. The resultant finish shall be suitable for soft soldering to a mounting surface.

3.3.9.5 Finish (series 2, classes H, L, R, and N). The finish of the shells and accessories shall be electrically conductive. Metal parts shall be of a corrosion resistant material or be protected to meet the performance requirements of this specification. Cadmium plating shall not be acceptable as a conductive finish.

3.3.9.6 Finish (series 2, class A). The finish of shells and accessories shall be hard, anodic and electrically nonconductive in accordance with MIL-F-14072, finish E516. Resulting finish shall be dull gray to black.

Source: https://assist.dla.mil -- Downloaded: 2016-11-16T06:23Z
Check the source to verify that this is the current version before use.

3.3.9.7 Corrosion resistant steel (finish). The finish for corrosion resistant steel shells shall be passivated in accordance with QQ-P-35.

3.3.10 Bayonet pins. Bayonet pins shall be of stainless steel.

3.4 Design and construction. Connectors and accessories shall be designed and constructed to withstand normal handling incident to installation and maintenance in service. Connector interchangeability control dimensions shall be as specified on figure 3. Rear accessory interchangeability control dimensions of series 2 connectors shall be as specified on figure 4.

3.4.1 Contacts. Contacts shall be so designed that neither the pins or the sockets will be damaged during mating of counterpart connectors. A quantity of crimp contacts consisting of the normal complement, plus one spare contact for connector arrangements having 26 contacts or less and two spares for arrangements over 26 contacts shall be included in the unit package. Unless otherwise specified, connectors shall be supplied with contacts (see 6.3).

3.4.1.1 Solder contacts (series 1). Solder contacts shall conform to the dimensions on figure 5 and shall be nonremovable from the insert. Solder cups shall be so designed that during soldering no components will be damaged. A vent hole or equivalent may be provided to prevent air entrapment during soldering.

3.4.1.2 Crimp contacts (series 1).

3.4.1.2.1 Crimp power contacts. Crimp power contacts shall conform to MS3192 or MS3193 and shall be qualified to MIL-C-23216.

3.4.1.2.2 Crimp shielded contacts. Size 8 shielded contacts shall be qualified to MIL-C-39029/23 or MIL-C-39029/24. Size 12 shielded contacts shall be qualified to MIL-C-39029/25 or MIL-C-39029/26. Unless otherwise specified, shielded contacts shall not be supplied with the connector (see 6.3).

3 4.1.2.3 Insertion and removal tools (series 1). The individual contacts shall be positively retained in the connector when installed with the applicable MS24256-A20, MS24256-B20, MS24256-A16, or MS24256-A12 contact insertion tool. The individual contacts shall be capable of being removed from the connector when using the applicable MS24256-R20, MS24256-R16, or MS24256-R12 contact removal tool. Unless otherwise specified, connectors shall be supplied with insertion and removal tools (see 6.3).

Source: https://assist.dla.mil -- Downloaded: 2016-11-16T06:23Z
Check the source to verify that this is the current version before use.

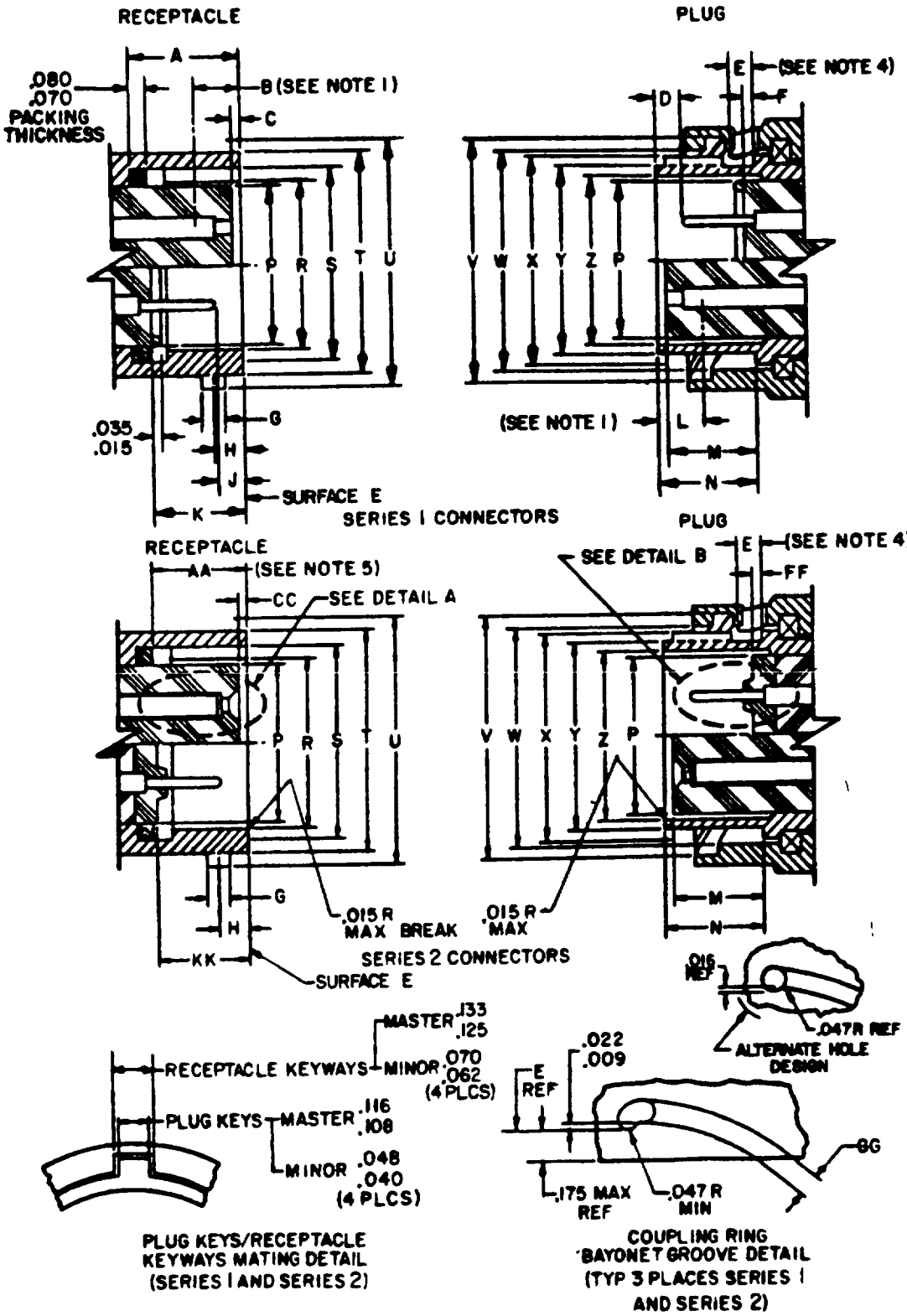

FIGURE 3. Connector intermateability control dimensions (series 1 and series 2).

Source: https://assist.dla.mil -- Downloaded: 2016-11-16T06:23Z
Check the source to verify that this is the current version before use.

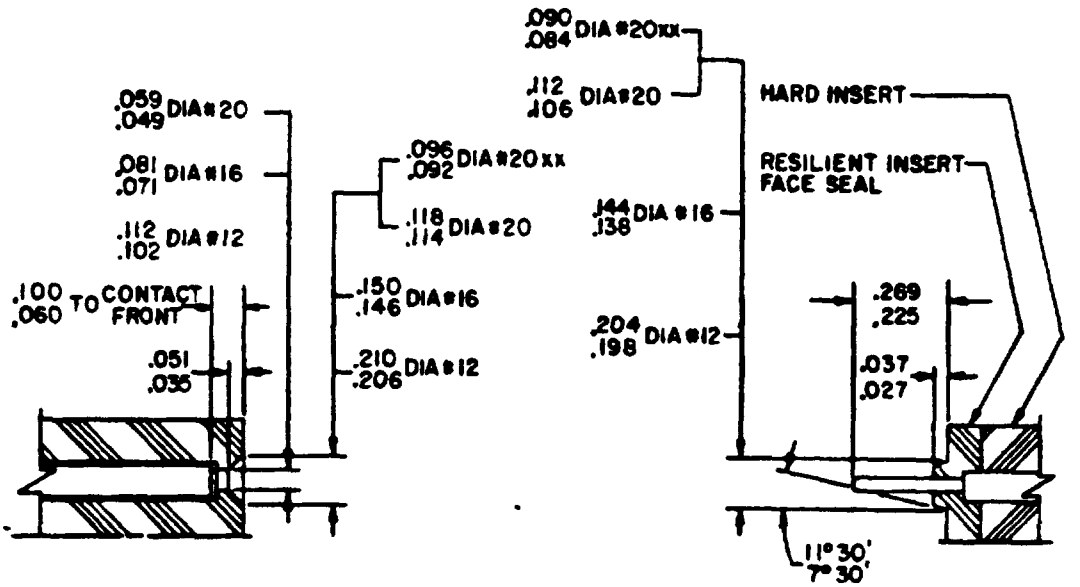

Shell size	Applies to series											
	1 only	1 only	1 only	1 only	1 and 2	1 only	1 and 2	1 and 2	1 only	1 only	1 only	1 and 2
	A pkg loc	B (see note 1)	C soc ins loc	D pin cont loc	E (see note 4)	F pin ins loc	G bay dia	H bay loc	J pin cont loc	K pin ins loc	L (see note 1)	M soc ins loc
8												
10												
12	.392 .372	.153 .075	.025 .005			.050 .030			.095 .065	.332 .312		.357 .337
14												
16				.085 .055	.133 .093		.084 .076	.100TP			.143 .065	
18												
20												
22	.454 .434	.215 .137	.087 .067			.112 .092			.157 .127	.394 .374		.419 .399
24					.172 .132		.131 .123	.109TP				

FIGURE 3. Connector intermateability control dimensions (series 1 and series 2) - Continued

Source: https://assist.dla.mil -- Downloaded: 2016-11-16T06:23Z
Check the source to verify that this is the current version before use.

Shell size	Applies to series										
	1 and 2	1 and 2	1 and 2	1 and 2	1 and 2	1 and 2	1 and 2	1 and 2	1 and 2	1 and 2	1 and 2
	N shld loc	P max ins dia	R shell id	S dia over kwys	T shell od	U dia over bays	V cplg R groove dia	W cplg R id	X dia over keys	Y shell od	Z min shell id
8	.363 .343	.285	.367 .361	.417 .406	.474 .468	.563 .547	.581 .570	.486 .480	.403 .392	.358 .352	.292
10		.402	.495 .489	.545 .534	.591 .585	.680 .664	.702 .691	.607 .601	.531 .520	.486 .480	.409
12		.516	.612 .606	.694 .683	.751 .745	.859 .843	.876 .865	.766 .760	.680 .669	.598 .592	.523
14		.641	.737 .731	.819 .808	.876 .870	.984 .968	1.000 .989	.890 .884	.805 .794	.723 .717	.648
16		.766	.862 .856	.944 .933	1.001 .995	1.108 1.092	1.125 1.114	1.015 1.009	.930 .919	.848 .842	.772
18		.855	.967 .961	1.044 1.033	1.126 1.120	1.233 1.217	1.250 1.239	1.141 1.135	1.030 1.019	.948 .942	.862
20	.425 .405	.980	1.092 1.086	1.169 1.158	1.251 1.245	1.358 1.342	1.375 1.364	1.265 1.259	1.155 1.144	1.073 1.067	.987
22		1.105	1.217 1.211	1.294 1.283	1.376 1.370	1.483 1.467	1.500 1.489	1.390 1.384	1.280 1.269	1.198 1.192	1.111
24		1 229	1.342 1.336	1.419 1.408	1.501 1.495	1.610 1.594	1.629 1.618	1.515 1.509	1.405 1.394	1.323 1.317	1.237

Shell size	Applies to series				
	2 only	2 only	2 only	1 and 2	2 only
	AA (see note 5)	CC soc ins	FF pin ins	GG bay groove	KK pin ins
8	.335 .315	.022 .005	.045 .025	.106 .089	.334 .317
10					
12					
14					
16					
18					
20	.397 .377	.084 .067	.107 .087		.396 .379
22					
24				.153 .136	

FIGURE 3. Connector intermateability control dimensions (series 1 and series 2) - Continued.

Source: https://assist.dla.mil -- Downloaded: 2016-11-16T06:23Z
Check the source to verify that this is the current version before use.

INCHES	MM	INCHES	MM	INCHES	MM	INCHES	MM
.0035	.09	.085	2.16	.150	3.81	.379	9.63
.005	.13	.087	2.21	.153	3.89	.392	9.96
.009	.23	.089	2.26	.157	3.99	.394	10.01
.010	.25	.090	2.29	.172	4.37	.396	10.06
.015	.38	.092	2.34	.175	4.44	.397	10.08
.022	.56	.093	2.36	.198	5.03	.399	10.13
.025	.63	.095	2.41	.204	5.18	.402	10.21
.027	.69	.096	2.44	.206	5.23	.403	10.24
.030	.76	.099	2.51	.210	5.33	.406	10.31
.035	.89	.100	2.54	.215	5.46	.409	10.39
.037	.94	.102	2.59	.225	5.72	.417	10.59
.040	1.02	.106	2.69	.269	6.83	.419	10.64
.045	1.14	.107	2.72	.285	7.24	.434	11.02
.047	1.19	.108	2.74	.292	7.42	.454	11.53
.048	1.22	.110	2.79	.312	7.92	.468	11.89
.049	1.24	.112	2.84	.315	8.00	.474	12.04
.050	1.27	.114	2.90	.317	8.05	.480	12.19
.051	1.29	.116	2.95	.332	8.43	.486	12.34
.055	1.40	.118	3.00	.334	8.48	.489	12.42
.059	1.50	.119	3.02	.335	8.51	.495	12.57
.060	1.52	.123	3.12	.337	8.56	.516	13.11
.062	1.57	.125	3.18	.343	8.71	.520	13.21
.065	1.65	.127	3.23	.352	8.94	.523	13.28
.067	1.70	.131	3.33	.357	9.07	.531	13.49
.070	1.78	.132	3.35	.358	9.09	.534	13.56
.071	1.80	.133	3.38	.361	9.17	.535	13.59
.075	1.91	.136	3.45	.363	9.22	.547	13.89
.076	1.93	137	3.48	.367	9.32	.563	14.30
.080	2.03	.138	3.51	.372	9.45	.570	14.48
.081	2.06	.143	3.63	.374	9.50	.581	14.76
.084	2.13	.146	3.71	.377	9.58	.585	14.86

FIGURE 3. Connector intermateability control dimensions (series 1 and series 2) - Continued.

Source: https://assist.dla.mil -- Downloaded: 2016-11-16T06:23Z
Check the source to verify that this is the current version before use.

INCHES	MM	INCHES	MM	INCHES	MM	INCHES	MM
.591	15.01	.848	21.54	1.044	26.52	1.269	32.23
.592	15.04	.855	21.72	1.067	27.10	1.280	32.51
.598	15.19	.856	21.74	1.073	27.25	1.283	32.59
.601	15.26	.859	21.82	1.086	27.58	1.294	32.87
.606	15.39	.862	21.89	1.092	27.74	1.317	33.45
.607	15.42	.865	21.97	1.105	28.07	1.323	33.60
.612	15.54	.870	22.10	1.108	28.14	1.336	33.93
.641	16.28	.876	22.25	1.111	28.22	1.342	34.09
.648	16.46	.884	22.45	1.114	28.30	1.358	34.49
.664	16.87	.890	22.61	1.120	28.45	1.364	34.65
.669	16.99	.919	23.34	1.125	28.58	1.370	34.80
.680	17.27	.930	23.62	1.126	28.60	1.375	34.92
.684	17.37	.933	23.70	1.135	28.83	1.376	34.95
.691	17.55	.942	23.93	1.141	28.98	1.384	35.15
.693	17.60	.944	23.98	1.144	29.06	1.390	35.31
.702	17.83	.948	24.08	1.155	29.34	1.394	35.41
.717	18.21	.961	24.41	1.158	29.41	1.405	35.67
.723	18.36	.967	24.56	1.169	29.69	1.408	35.76
.731	18.57	.968	24.59	1.192	30.28	1.419	36.04
.737	18.72	.980	24.89	1.198	30.43	1.467	37.26
.745	18.92	.984	24.99	1.211	30.76	1.483	37.67
.751	19.07	.987	25.07	1.217	30.91	1.489	37.82
.760	19.30	.989	25.10	1.229	31.22	1.495	37.97
.766	19.46	.995	25.27	1.233	31.32	1.500	38.10
.772	19.61	1.000	25.40	1.237	31.42	1.501	38.12
.794	20.17	1.001	25.42	1.239	31.47	1.509	38.33
.805	20.45	1.009	25.63	1.245	31.62	1.515	38.48
.808	20.52	1.015	25.78	1.250	31.75	1.594	40.49
.819	20.80	1.019	25.88	1.251	31.77	1.610	40.89
.842	21.39	1.030	26.16	1.259	31.98	1.618	41.10
.843	21 41	1.033	26.24	1.265	32.13	1.619	41.12

NOTES

1. 'B' and 'L' distance between end of shell and the point at which a gage pin having the same basic diameter as the mating contact and a square face first engages socket contact spring. (Applies to series 1 only).
2. Details 'A' and 'B' apply to both plugs and receptacles. (Applies to series 2 only).
3. 'XX' where space does not permit use of normal diameters, reduced diameters are used Refer to applicable MS connector sheets for affected arrangements. (Applies to series 2 only).
4. 'E' distance from plug shell shoulder to locking point of coupling ring. (Applies to series 1 and series 2).
5. 'AA' initial contact with static seal. (Applies to series 2 only).

FIGURE 3. Connector intermateability control dimensions (series 1 and series 2) - Continued.

Source: https://assist.dla.mil -- Downloaded: 2016-11-16T06:23Z
Check the source to verify that this is the current version before use.

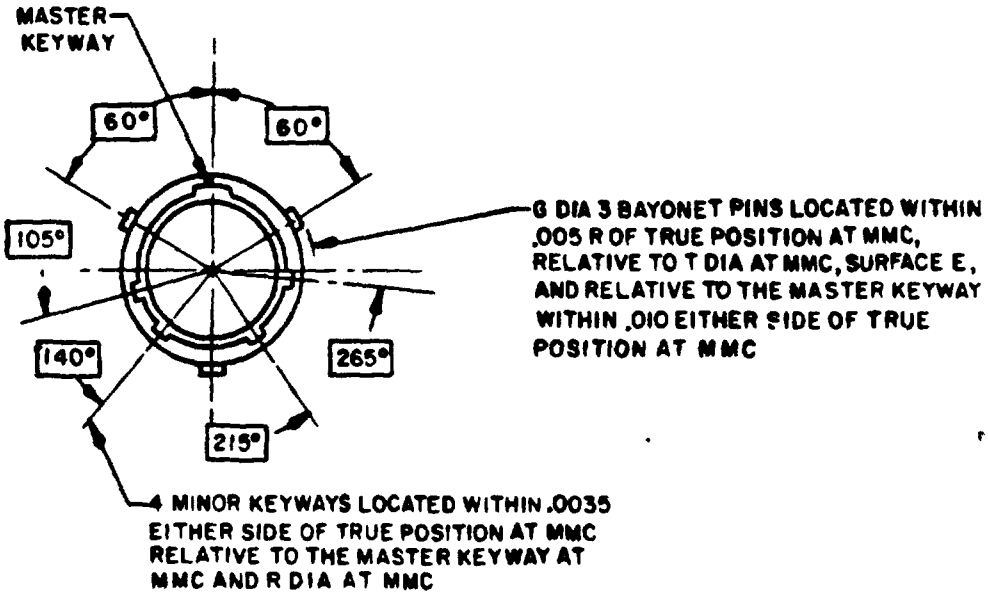

RECEPTACLE KEYWAYS AND BAYONET PINS

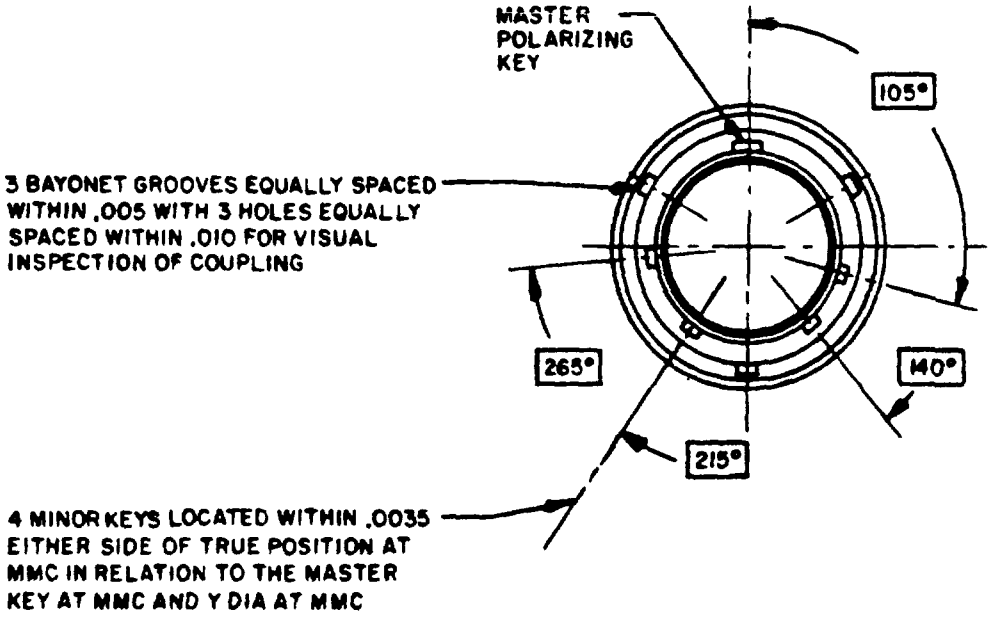

PLUG KEYS AND BAYONET GROOVES

FIGURE 3. Connector intermateability control dimensions - Continued.

Source: https://assist.dla.mil -- Downloaded: 2016-11-16T06:23Z
Check the source to verify that this is the current version before use.

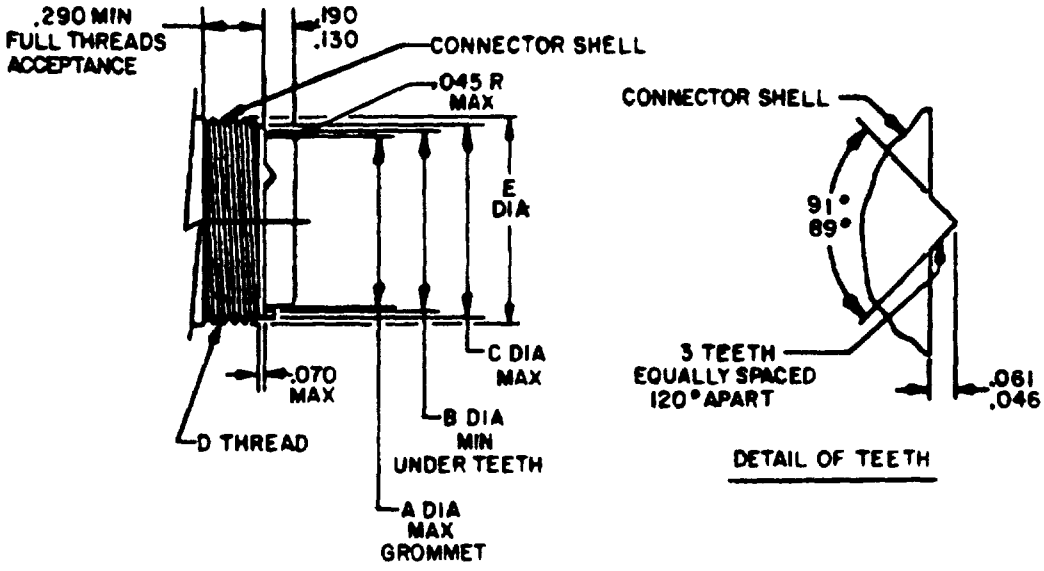

Size	A	B	C	D thread (class 2)	E Dia. RCPT (Max)	E Dia. Plug (Min)
8	.305	.370	.437	.500-20 UNF	.499	.470
10	.405	.497	.572	.625-24 UNEF	.625	.600
12	.531	.613	.687	.750-20 UNEF	.750	.724
14	.665	.738	.812	.875-20 UNEF	.875	.849
16	.790	.863	.937	1.000-20 UNEF	1.000	.974
18	.869	.919	.992	1.0625-18 UNEF	1.062	1.030
20	.994	1.044	1.117	1.1875-18 UNEF	1.187	1.154
22	1.119	1.169	1.242	1.3125-18 UNEF	1.312	1.279
24	1.244	1.294	1.367	1.4375-18 UNEF	1.437	1.404

INCHES	MM	INCHES	MM
.045	1.14	.849	21.56
.046	1.17	.863	21.92
.061	1.55	.869	22.07
.070	1.78	.875	22.23
.130	3.30	.919	23.34
.190	4.83	.937	23.80
.290	7.37	.974	24.74
.305	7.75	.992	25.20
.370	9.40	.994	25.25
.405	10.29	1.000	25.40
.437	11.10	1.030	26.16
.470	11.94	1.044	26.52
.497	12.62	1.062	26.97
.499	12.67	1.117	28.37
.531	13.49	1.119	28.42
.572	14.53	1.154	29.31
.600	15.24	1.169	29.69
.613	15.57	1.187	30.15
.625	15.88	1.242	31.55
.665	16.89	1.244	31.60
.687	17.45	1.279	32.49
.724	18.39	1.294	32.87
.738	18.75	1.312	33.32
.750	19.05	1.367	34.72
.790	20.07	1.404	35.66
.812	20.62	1.437	36.50

FIGURE 4. Rear accessory interchangeability control dimensions (series 2 only).

Source: https://assist.dla.mil -- Downloaded: 2016-11-16T06:23Z
Check the source to verify that this is the current version before use.

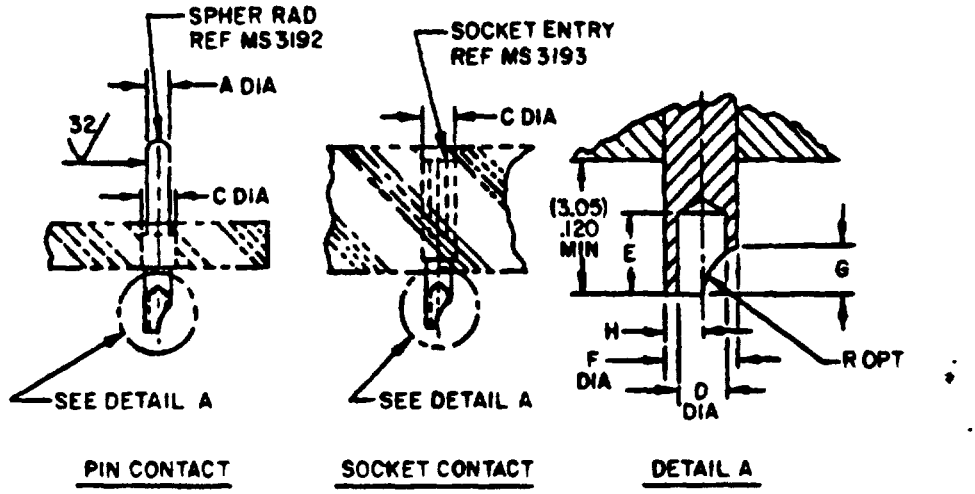

FIGURE 5A. Contacts, solder type, class E, P and J.

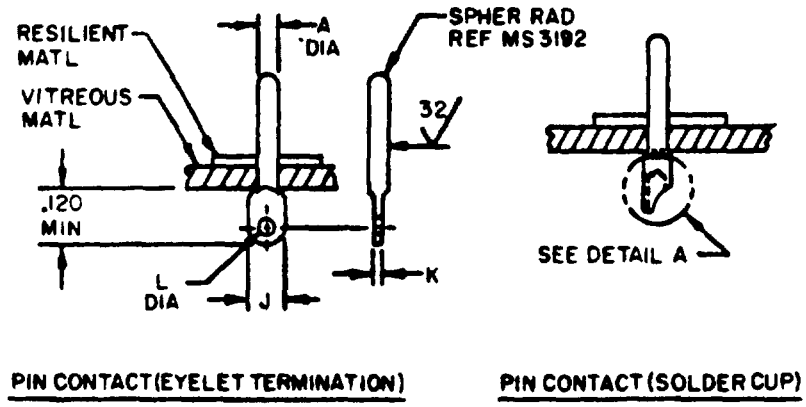

FIGURE 5B Contact, solder type, class H.

FIGURE 5. Solder type contacts (series 1).

Source: https://assist.dla.mil -- Downloaded: 2016-11-16T06:23Z
Check the source to verify that this is the current version before use.

Size	A ±.001	C Max	D Min	E +.063 -.016	F Min	F Max	G ±.031	H ±.010	J Max	K Min	L Min
20	.040	.100	.042	.125	.061	.088	.094	.037	.085	.012	.042
16	.0625	.130	.069	.188	.096	.116	.125	.054	.115	.020	.065
12	.094	.190	.112		.139	.150		.070	.190		.098

INCHES	MM	INCHES	MM
.001	.02	.085	2.16
.010	.25	.088	2.23
.012	.30	.094	2.39
.016	.41	.096	2.44
.020	.51	.100	2.54
.031	.79	.112	2.84
.037	.94	.115	2.92
.040	1.02	.116	2.95
.042	1.07	.120	3.05
.054	1.37	.125	3.18
.061	1.55	.130	3.30
.0625	1.59	.139	3.53
.063	1.60	.150	3.81
.065	1.65	.188	4.77
.069	1.72	.190	4.82
.070	1.78		

Surface finish shall be in accordance with ANSI B46.1-1962, dimension "A" is measured over plating.
Dimensions in inches.

FIGURE 5 Solder type contacts (series 1)-Continued.

Source: https://assist.dla.mil -- Downloaded: 2016-11-16T06:23Z
Check the source to verify that this is the current version before use.

3.4.1.3 Through-bulkhead contacts (series 1). The engaging ends of contacts in through-bulkhead connectors shall conform dimensionally to corresponding details of figure 5A. Contacts shall be nonremovable.

3.4.1.4 Crimp contacts (series 2).

3.4.1.4.1 Crimp power contacts. Crimp power contacts shall conform to MIL-C-39029/4, /5, /9, /10 or /15. Neither the pin nor socket shall be damaged by twisting or forcing during mating and unmating of the connectors, or by insertion of contacts into or removal of contacts from the connector with the tools specified for insertion or removal.

3.4.1.4.2 Crimp shielded contacts. Size 12 shielded contacts shall be qualified to MIL-C-39029/7 or MIL-C-39029/8. Contacts shall be inserted and removed with the same tools used for the size 12 power contacts. Unless otherwise specified, shielded contacts shall not be supplied with the connector (see 6.3).

3.4.1.4.3 Insertion and removal tools (series 2). Tools required for assembly or disassembly of pin and socket contacts into their connector inserts, shall be in accordance with MS3448 or MS27534. Unless otherwise specified, connectors shall be supplied with insertion and removal tools (see 6.3).

3.4.2 Insert design and construction.

3.4.2.1 Insert design and construction (series 1). Inserts shall be of voidless construction and shall be secured to prevent rotation within the shell. The inserts shall be nonremovable from the shell and shall be installed in the position specified in MIL-STD-1669

3.4.2.1.1 Inserts for crimp contact connectors (series 1). In crimp contact connectors, the insert and wire sealing grommet or insulating spacer shall be one integral part. The design shall permit the removal and reinsertion of individual contacts without any damage detrimental to connector performance to any part of the insert, including contact retention mechanisms or the sealing members, using the applicable MS24256 tools.

3.4.2.1.2 Contact arrangement (series 1). Contacts shall be arranged in accordance with MIL-STD-1669 All solder cup openings shall be oriented so that they face the terminus of the indexing radius indicated in MIL-STD-1669 and are at right angles to a center line coinciding with the indexing radius.

3.4.2.1.3 Contact spacing. Minimum nominal center-to-center spacing and minimum dielectric thickness, contact to shell, or contact to contact shall be in accordance with the values shown in table III.

TABLE III. Minimum nominal contact spacing and minimum dielectric thickness.

Connector classes	Contact size	Service rating I			Service rating II		
		Center-to-center	Dielectric		Center-to-center	Dielectric	
			Rigid	Resilient		Rigid	Resilient
F,J,L, P,N	20	.130	0.006	0.008	0.162	0.008	0.012
	16	.168	.006	.008	.190	.008	.012
	12	.205	.006	.008	.230	.008	.012
H	20	.130	.006	.030	.162	.008	.030
	16	.168	.006	.030	.190	.008	.030
	12	.205	.006	.030	.230	.008	.030

Source: https://assist.dla.mil -- Downloaded: 2016-11-16T06:23Z
Check the source to verify that this is the current version before use.

3.4.2.1.4 Contact alinement (series 1). Inserts for socket contacts shall provide an overall side-play of the socket contacts of 0.0025 to 0.0075 inch from the required position to facilitate alinement with mating pin contacts.

3.4.2.1.5 Class H (series 1). Contacts shall be fused into the vitreous inserts of class H connectors. A resilient face shall be permanently bonded to the insert to ensure an interfacial seal in mating.

3.4.2.2 Insert design and construction (series 2). The inserts shall be rigid plastic and so designed and constructed with proper-sections and radii that they will not chip, crack or break during normal assembly or service. Hollow-type inserts shall not be used. The inserts shall be nonremovable, mechanically retained, and bonded to the shell with the design and construction such that all air paths between cavities are eliminated. The insert engaging faces shall be designed and constructed such that all air paths between cavities at the connector interfaces shall be eliminated when the connectors are mated. The inserts shall be so designed that positive locking of the contacts in the inserts is provided. Socket insert face shall be of a rigid plastic material The design shall permit the removal and reinsertion of individual contacts without any damage detrimental to connector performance to any part of the insert, including contact retention mechanisms and the sealing members, using the applicable MS27534 or MS3448 tool

3 4.2.2 1 Inserts (series 2, class H). Class H receptacle inserts shall be so designed and constructed with proper sections and radii that they will not readily chip, crack or break during normal assembly or service. The inserts shall be nonremovable from the shell and shall meet the requirements of this specification.

3.4.2 2 2 Inserts (series 2, class N). The inserts shall be bonded assembly forming a single unit, the front shall be of a vitreous material with a resilient face and the back shall be rigid plastic The inserts shall be so designed and constructed with proper-sections and radii that they will not chip, crack or break during normal assembly or service. Hollow-type inserts shall not be used. The insert assembly shall be nonremovable, mechanically retained, and bonded to the shell with the design and construction such that all air paths between cavities are eliminated. The insert engaging faces shall be designed and constructed such that all air paths between cavities at the connector interfaces shall be eliminated when the connectors are mated. The inserts shall be so designed that positive locking of the crimp terminals in the rigid plastic is provided.

3.4.2 2.3 Contact insertion and extraction (series 2, except class H). The connector design shall permit individual insertion and extraction of contacts without removing the insert or sealing members. Insertion of the contacts into, and extraction of the contacts from the insert shall be accomplished from the wire side of the connector and with the aid of tools listed in 3.4 1 4.3 Insertion/extraction shall be possible with a full complement of maximum OD wire (see table IV).

TABLE IV. Maximum wire diameter.

Contact size	Maximum OD
20	.083
16	.103
12	.158

3.4.2.2.4 Contact arrangement identification (series 2). The contact positions shall be permanently designated in contrasting color on the front face of the insert and on the rear face of the wire sealing grommet as noted on the insert arrangement of MIL-STD-1669, and figure 6. The interfacial markings of the inserts shall not be raised or recessed on any sealing surfaces

Source: https://assist.dla.mil -- Downloaded: 2016-11-16T06:23Z
Check the source to verify that this is the current version before use.

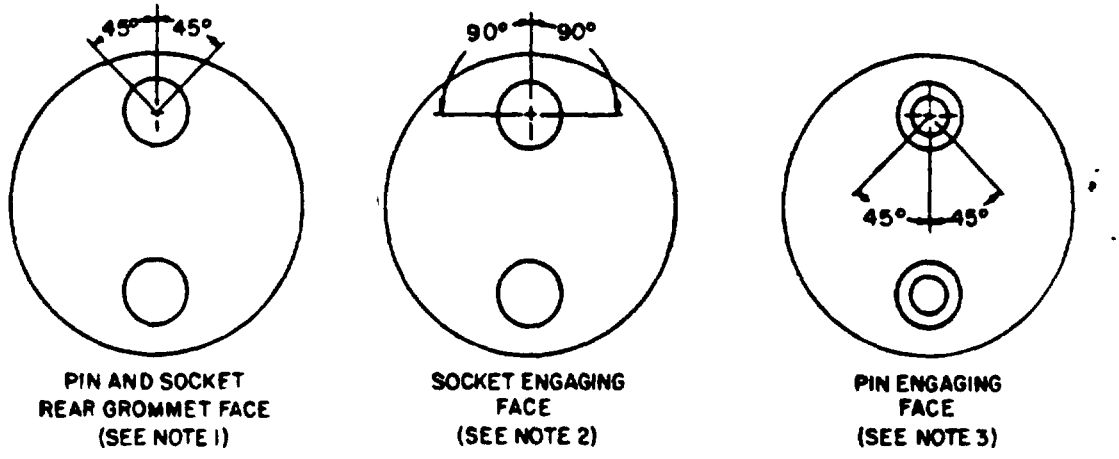

NOTES:

1. Contact identification letters on rear grommet face of socket and pin insert shall be within 45° either side of vertical centerline above the contact cavity.
2. Letters shall be placed on socket insert engaging face as shown. The letters shall be above the horizontal centerline of the chamfered lead-ins. Where space precludes the application of letters an ever expanding orbital line is permissible.
3. Letters on the engaging face of the pin insert shall be on the raised seal barrier or at the base of the raised seal barrier above or beside the pin contact cavity. Letter shall not extend into the lower sector of the raised seal barrier which extends 45° either side of the vertical centerline. Where space precludes their application an expanding orbital line is permissible.
4. On outer row of contacts individual cavity identification may be deleted from those cavities where space precludes its application.
5. Underscoring of lower case letters is optional.

FIGURE 6. Insert cavity identification locations (series 2).

Source: https://assist.dla.mil -- Downloaded: 2016-11-16T06:23Z
Check the source to verify that this is the current version before use.

3.4.2.2.5 Insert position (series 2). The inserts shall be positioned with respect to the shell within the tolerance specified in figure 3.

3.4.2.2.6 Alternate insert position (series 2). Alternate insert position shall be as shown in MIL-STD-1669.

3.4.2.2.7 Contact alinement (series 2). The alinement of pin contacts assembled into either plug or receptacle shall be as specified in MIL-STD-1669 when measured at the engaging end of the contacts.

3.4.2.2.8 Contact float (series 2). Socket contacts assembled in either plug or receptacle shall allow for contact float of 0.0025 to 0.0075 inch from true alinement position.

3.4.3 Shell design (except classes H and N). The connector shells shall be seamless and shall retain their inserts in a positive manner. The shells for the connectors shall be designed to accept and retain a cable support or other accessory as shown in the applicable MS standard. Connectors shall be designed in such a manner as to incorporate a static peripheral seal located within the receptacles.

3.4.3.1 Jam nut receptacle shells. Jam nut mounting connectors shall be provided with a mounting nut and an "O" ring seal.

3.4.3.2 Connector shell (series 2). The connector shell shall have a blue color band in accordance with ANSI C83.1 (RS-359) indicating a rear release connector. The location of the color band shall be as specified (see 3.1).

3.4.3.3 Backshell accessories (series 2). Backshells shall conform to requirements specified (see 3.1). The backshells shall have provision for safety wiring. In addition, they shall have wire sealing grommet compression capability. Backshells shall be free of any sharp edges or other configurations that could cause damage to wire extending through them. In addition, the RFI backshell shall provide metal-to-metal bottoming of the follower to the rear face of the connector shell. Interchangeability dimensions shall be as specified on MS3155.

3.4.3.4 RFI finger spring (series 2) (RFI plugs). Grounding springs shall have a minimum of six fingers per inch. Spring fingers shall be designed to make electrical contact with the mating shell without interfering with proper engagement. The grounding springs shall be permanently fixed to the shell periphery.

3.4.4 Engagement of connectors. Counterpart connectors of any arrangement and accessories shall be capable of being fully engaged and disengaged without the use of tools. Engagement of connectors shall be defined as full insertion of pins into sockets and proper sealing of the mating insert faces. Full engagement shall be indicated by an audible sound at the completion of the coupling cycle, and a positive detent shall be included in the coupling mechanism to lock connectors in the engaged position.

3.4.4.1 Coupling. Connectors shall be coupled to counterpart connectors by means of bayonet coupling rings. Coupling shall be accomplished by clockwise rotation of the coupling ring; uncoupling by counterclockwise rotation. The bayonet coupling rings shall be knurled to provide a gripping surface. Coupling pins on the receptacle shall have end surfaces of contrasting color to the coupling ring. The ends of the pins shall be visible through suitable holes in the coupling ring when the connectors are fully engaged and the coupling ring is in the locked position.

3.4.4.1.1 Coupling assurance (series 2). Three axial stripes shall be placed on the plug shell which will aline with three corresponding stripes on the coupling ring when completely coupled.

3.4.4.2 Shell polarization. Polarization of connectors shall be accomplished by matched integral key(s) and keyway(s) of counterpart connectors. The polarization of counterpart connectors shall take place before coupling rings are engaged, and before any pin contacts can touch the opposing insert face or socket of the counterpart connector.

Source: https://assist.dla.mil -- Downloaded: 2016-11-16T06:23Z
Check the source to verify that this is the current version before use.

3.4.4.3 Lubrication. Bayonet coupling slots shall be coated with a suitable lubricant. Features which are intended to provide potting compound anchorage shall be free of lubricant. Accessory threads of series 1 shall be coated with a suitable lubricant.

3.4.4.4 Engagement seal. Connectors shall contain sealing means so that engaged connectors comply with the requirements specified herein. The design of the seal shall be such that in mated connectors all air paths between adjacent contacts and between contacts and shells are eliminated. There shall be interfacial mating of the engaged connector insert to provide dielectric under compression of 0.005 inch minimum.

3.4.4.5 Protective covers and stowage receptacles (series 1). When mated to counterpart connectors, the protective covers and stowage receptacles shall maintain the connector free of moisture, prevent air leakage, and comply with the applicable requirements of this specification.

3.4.5 Wire sealing.

3.4.5.1 Classes E and F connectors (series 1). Class E and F connectors, except MS3112, MS3119, MS3122 and MS3127 shall be provided with a wire-sealing resilient grommet and gland nut capable of sealing on wires of the sizes specified in table II.

3.4.5.1.1 Solder contact connectors (series 1). Class E solder contact connectors shall be provided with a removable resilient grommet and retaining feature. The grommet shall be designed to fit firmly against the rear face of the insert and around each contact and wire termination so that any air path from each contact termination to all other terminations and the shell is interrupted by dielectric material under compression of 0.005 inch, minimum.

3.4.5.1.2 Crimp contact connectors (series 1). Crimp contact connectors shall be provided with an integral grommet and insert.

3.4.5.2 Class P connectors (series 1). Class P connectors shall be provided with a plastic potting form suitable to accept and bond to MIL-S-8516 potting material. Inserts of class P connectors shall be so designed that potting material will adhere to the shell and insert without treatment by the user.

3.4.5.3 Class H connectors (series 1). Class H connectors shall not be supplied with wire sealing grommet; however, the shells and inserts shall be so designed that MIL-S-8516 potting material will adhere to the insert without treatment by the user.

3.4.5.4 Class J connectors (series 1). Class J connectors shall be provided with a resilient gland and gland nut capable of sealing on appropriate single-jacketed multiconductor cables.

3.4.5.5 Grommet sealing plugs (series 1). The grommets of classes E and F connectors shall be designed to accept sealing plugs in accordance with MS3187 in lieu of wire where unwired contacts are employed. Fifteen percent of the number of contacts but not less than 1, shall be included in the unit package. Unless otherwise specified, connectors shall be supplied with grommet sealing plugs (see 6.3).

3.4.5.6 Wire sealing members (rear grommet) (series 2, classes L, R, and A). The wire sealing member shall provide suitable sealing for overall wire diameters listed in table II, and shall not be removable from the shell. The seal shall accept a full complement of wire approaching the minimum OD or a full complement of wire approaching the maximum OD.

3.4.5.7 Grommet sealing plugs (series 2, classes L, R, and A). Grommet sealing plugs for unused contact cavities shall be in accordance with MS3187 or MS27488. The same sealing plugs shall be for use in both connector plugs and receptacles. Fifteen percent of the number of contacts, but not less than 1, shall be enclosed in the unit package. Unless otherwise specified, connectors shall be supplied with grommet sealing plugs (see 6.3).

Source: https://assist.dla.mil -- Downloaded: 2016-11-16T06:23Z
Check the source to verify that this is the current version before use.

3.4.6 Receptacle mounting. Receptacle mounting shall be one of the following as specified (see 3.1):

(a) Flange mounting
(b) Jam nut mounting
(c) Solder mounting

3.5 Intermateability and interchangeability.

3.5.1 Intermateability. Connectors conforming to this specification shall be intermateable. When different series of connectors or different types of contacts (crimp or solder) are used in a mated pair of connectors, the minimum performance requirements (temperature, sealing, etc) shall be met.

3.5.2 Interchangeability. All connectors and accessories having the same MS standard part number shall be completely interchangeable with each other with respect to installation (physical) and performance (function) as specified herein.

3.6 Performance. Connectors shall perform as follows when subjected to the conditions and tests specified. Unless otherwise specified, class R and A connectors must meet the performance requirements of the class L.

3.6.1 Maintenance aging (series 1, crimp contact connectors). After being tested as specified in 4.6.2, all crimp contact connectors shall be capable of conforming to this specification. Contact retention (see 4.6.32), shall be performed on contacts subjected to the maintenance aging test.

3.6.2 Mating and unmating forces (series 1). When tested as specified in 4.6.3, mating and unmating of protective covers and of counterpart connectors with the maximum number of contacts installed, shall meet the torque requirements of table V.

TABLE V. Connector mating and unmating forces (series 1).

Torque (inch-pounds)

Shell size	Maximum engagement and disengagement	Minimum disengagement
8	8	1
10	12	1
12	16	2
14	20	4
16	24	4
18	28	4
20	32	6
22	36	7
24	44	7

3.6.3 Mating and unmating forces (series 2). When tested as specified in 4.6.4, completely assembled connectors, except RFI plugs, shall meet the torque requirements of table VI.

Source: https://assist.dla.mil -- Downloaded: 2016-11-16T06:23Z
Check the source to verify that this is the current version before use.

TABLE VI. Connector mating and unmating forces (series 2).

Shell size	Torque (inch-pounds)	
	Maximum engagement and disengagement	Minimum disengagement
8	8	1
10	10	1
12	14	2
14	17	4
16	23	4
18	26	4
20	31	6
22	38	7
24	38	7

3.6.4 Contact resistance (series 1). When tested as specified in 4.6.5, solder contacts in the mated condition or mated contacts consisting of crimp contacts mated to solder contacts shall meet the contact resistance requirements of table VII. Crimp contacts in the mated condition shall meet the contact resistance requirements of MIL-C-23216.

TABLE VII. Contact resistance limits (series 1).

Connector class	Wire barrel size	Wire size	Maximum voltage drop			
			Initial		After corrosion	
			mV		mV	
E, F, J, and P	20	24	45		55	
		22	45		55	
		20	55		65	
	16	20	45		55	
		18	45		55	
		16	50		60	
	12	14	45		55	
		12	50		60	
			Maximum voltage drop			
			Initial		After corrosion	
			Avg	Indiv	Avg	Indiv
			mV	mV	mV	mV
H	20	20	70	105	90	165
	16	16	65	95	80	165
	12	12	65	95	80	165

3.6.5 Contact resistance (series 2).

3.6.5.1 Contact resistance (series 2, class L). When tested as specified in 4.6.6, resistance of mated pairs of pin and socket contacts shall be such that the potential drop measured with the specified test current will not be greater than the potential drop listed in table VIII.

Source: https://assist.dla.mil -- Downloaded: 2016-11-16T06:23Z
Check the source to verify that this is the current version before use.

TABLE VIII. Contact resistance limits (series 2).

Contact	Wire size	Maximum voltage drop
		mV
20	24 22 20	45 45 55
16	20 18 16	45 45 50
12	14 12	45 50

3.6.5.2 Contact resistance (series 2, classes H and N). When tested as specified in 4.6.6, the contact resistance of receptacles shall not exceed that specified in table VIII by more than 700 percent.

3.6.6 Insulation resistance (series 1). Insulation resistance versus temperature shall be as shown on figure 1A.

3.6.6.1 Insulation resistance at ambient temperature (series 1). When connectors are tested as specified in 4.6.7.1 at 25°C (77°F), the insulation resistance shall be greater than 5,000 megohms.

3.6.6.2 Insulation resistance at elevated temperature - short time (series 1). When connectors are tested as specified in 4.6.7.2 at 125°C, the insulation resistance shall be greater than 3 megohms.

3.6.6.3 Insulation resistance at elevated temperature - long time (series 1). When connectors are tested as specified in 4.6.7.3 at 105°C, the insulation resistance shall be greater than 12 megohms.

3.6.7 Insulation resistance (series 2). Insulation resistance versus temperature shall be as shown on figure 2A.

3.6.7.1 Insulation resistance (series 2). When connectors are tested as specified in 4.6.8.1 at 25°C, the insulation resistance shall be greater than 5,000 megohms.

3.6.7.2 Insulation resistance (high temperature) (series 2). When connectors are tested as specified in 4.6.8.2 at 200°C, the insulation resistance shall be greater than 500 megohms.

3.6.8 Dielectric withstanding voltage (series 1). When tested as specified in 4.6.9.1 and 4.6.9.2, connectors shall show no evidence of breakdown or flashover when subjected to the test voltages and altitudes of table XXV.

3.6.8.1 Working voltages. Maximum working voltages are as shown in table IX.

TABLE IX. Working voltage, ac, rms (series 1 and 2).

Condition	Service rating I	Service rating II	Service rating shielded
Sea level	600	1,000	500 volts, dc
70,000 ft	300	450	---

Source: https://assist.dla.mil -- Downloaded: 2016-11-16T06:23Z
Check the source to verify that this is the current version before use.

3.6.9 Dielectric withstanding voltage (series 2).

3.6.9.1 Dielectric withstanding voltage (sea level). When tested as specified in 4.6.10.1, maximum leakage current shall be 2 milliamperes and there shall be no evidence of electric breakdown or flashover. The service rating is on the applicable military standard.

3.6.9.2 Dielectric withstanding voltage (altitude). When tested as specified in 4.6.10.2, maximum leakage current shall be 2 milliamperes and there shall be no evidence of electric breakdown or flashover.

3.6.10 Contact insertion and removal forces (crimp contact connectors) (series 1). The contact insertion forces and the forces required to remove unlocked contacts shall not exceed the values specified in table X when subjected to the maintenance aging test (see 4.6.2).

TABLE X. Contact insertion and removal forces (pounds, maximum) (series 1).

Contact size	Insertion and removal forces
20	20
16	20
12	30

3.6.11 Contact insertion and removal forces (series 2) (except class H). When tested as specified in 4.6.11, the insertion force for any individual contact shall not exceed 15 pounds. The removal force shall not exceed 10 pounds.

3.6.12 Thermal shock (series 1). When tested as specified in 4.6.12, there shall be no evidence of damage detrimental to the operation of connectors.

3.6.13 Thermal shock (series 2). After testing as specified in 4.6.13, connectors shall meet the subsequent test requirements listed in the applicable test sequence table.

3.6.14 Water pressure (series 1) (applicable to solder-type contact connectors, class E receptacles and class J plugs). When tested as specified in 4.6.14, receptacle inserts and panel seals shall show no leakage. In addition, there shall be no evidence of leakage at the connector interface of mated connectors, neither shall there be evidence of water penetration into the J adapters of the mated and unmated plugs; and the insulation resistance of mated connectors at the end of 48 hours, while still immersed, shall be 100 megohms minimum. After removal of unmated connectors from the immersion tank, the insulation resistance shall be 100 megohms minimum.

3.6.15 Air leakage (series 1).

3.6.15.1 Solder contact receptacles (except class H), through-bulkhead receptacles, class J plugs, stowage receptacles, and protective covers. When tested as specified in 4.6.15, the air leakage rate shall be no greater than 1 atmospheric cubic inch per hour (4.55×10^{-3} cm^3/s), including the flange O-ring seal of all jam nut receptacles.

3.6.15.2 Class H connectors. When tested as specified in 4.6.15.2, the air leakage rate shall not exceed 0.1 micron cubic foot per hour (1×10^{-6} cm^3/s). The specified leakage rate shall apply only through the connector and not through the flange and mounting surface area, unless solder mounted.

Source: https://assist.dla.mil -- Downloaded: 2016-11-16T06:23Z
Check the source to verify that this is the current version before use.

3.6.16 Air leakage (series 2, classes H and N). When receptacles are tested as specified in 4.6.16, the leakage rate shall not exceed 0.1 micron cubic foot per hour (1×10^{-6} cm^3/s) when subjected to a differential pressure of 14.7 ± 0.3 pounds force per square inch (lb_f/in^2).

3.6.17 Durability (series 1). When tested as specified in 4.6.17, counterpart connectors shall show no mechanical or electrical defects detrimental to the operation of the connector, after 500 cycles of coupling and uncoupling.

3.6.18 Durability (series 2, except RFI plugs). When tested as specified in 4.6.18, connectors shall meet the subsequent test requirements after 500 cycles of mating and unmating.

3.6.18.1 Durability (series 2) (RFI plugs). When tested as specified in 4.6.18, connectors shall meet the subsequent test requirements after 250 cycles of mating and unmating.

3.6.19 Salt spray (corrosion) (series 1). When tested as specified in 4.6.19, unmated connectors, stowage receptacles, protective covers and accessories shall show no exposure of basic metal and shall meet all subsequent test requirements.

3.6 20 Salt spray (corrosion) (series 2) When tested as specified in 4.6.20, there shall be no exposure of the basic metal which will affect performance. The connector shall meet all subsequent test requirements.

3.6.21 Vibration (series 1). When tested as specified in 4.6.21, mated connectors shall not be damaged and there shall be no loosening of parts. Counterpart connectors shall be retained in full engagement, and there shall be no interruption of electrical continuity longer than 10 microseconds.

3.6.22 Vibration (series 2). When tested as specified in 4.6.22, mated connectors shall not be damaged and there shall be no loosening of parts. The coupling ring shall not loosen and there shall be no interruption of electrical continuity longer than 1 microsecond.

3.6.23 Shock (specified pulse) (series 1). When tested as specified in 4.6.23, mated connectors shall not be damaged and there shall be no interruption of electrical continuity longer than 10 microseconds.

3.6.24 Shock (specified pulse) (series 2). When tested as specified in 4.6.24, mated connectors shall not be damaged and there shall be no interruption of electrical continuity longer than 1 microsecond.

3.6.25 Humidity (series 1). When tested as specified in 4.6.25, mated connectors shall maintain an insulation resistance of 100 megohms or greater at 25°C.

3.6.26 Humidity (series 2). When tested as specified in 4.6.26, insulation resistance shall be at least 100 megohms. The connector shall meet the subsequent tests listed in the applicable test sequence table.

3.6.27 Fluid immersion (series 1). When tested as specified in 4.6.27, connectors shall mate within the forces specified in table V.

3.6.28 Fluid immersion (series 2).

3.6.28.1 Classes H, L and N. After being tested as specified in 4.6.28.1, connectors shall mate properly and shall meet the requirements of all subsequent tests.

3.6.28.2 Retention system fluid immersion (series 2). When tested as specified in 4.6.28.2, connectors shall meet the requirements of subsequent tests as specified herein. (Effects of fluids on resilient sealing members shall not be a consideration of this test.)

Source: https://assist.dla.mil -- Downloaded: 2016-11-16T06:23Z
Check the source to verify that this is the current version before use.

3.6.29 Insert retention (series 1) (except class H). When tested as specified in 4.6.29, inserts shall not be dislocated from their original positions. The effective pressure differential shall be 75 lb_f/in^2.

3.6.29.1 Insert retention (series 1) (class H). When tested as specified in 4.6.29, class H inserts shall not be dislocated from the original positions. The effective pressure differential shall be 200 lb_f/in^2.

3.6.30 Insert retention (series 2, class L). When connectors are tested as specified in 4.6.30, inserts shall withstand an applied minimum pressure of 150 lb_f/in^2 for shell sizes 8 and 10, 96 lb_f/in^2 for size 12, and 75 lb_f/in^2 for shell sizes 14 through 24 in either direction for a minimum period of 5 seconds without being dislocated from their normal position in the shell as defined on the applicable MS standard.

3.6.30.1 Insert retention (series 2, classes H and N). When tested as specified in 4.6.30.1, receptacles shall support a minimum differential pressure in either direction of 100 lb_f/in^2 for shell sizes 8 through 24 static loading for a minimum of 5 minutes. The receptacle shall meet the subsequent test requirements of the applicable test sequence table.

3.6.31 Gage location and retention (crimp type contacts). The axial location of series 1 pin contacts and series 2 pin and socket contacts shall be measured as specified in 4.6.31 using test gages conforming to MS3460, MS3461, or MS3462, as applicable. Gage location measurements shall fall within the range specified in figure 3. Test gages conforming to MS3460, MS3461, or MS3462, as applicable, shall be retained in the pin and socket cavities of series 1 and series 2 crimp contact connectors, and in the rear termination cavities of class N connectors, with the axial loads specified in table XI applied. The axial displacement of the test gages while under load shall not exceed 0.015 inch.

3.6.32 Contact retention. When tested as specified in 4.6.32, contacts shall be retained in their inserts at the axial loads specified in table XI. The axial displacement of crimp contacts with respect to the shell shall not exceed 0.012 inch while under load with the accessory tightened or 0.015 while under load with the accessory removed. The axial displacement of solder contacts with respect to the shell shall not exceed 0.012 inch within one minute after the load has been removed.

TABLE XI. Axial loads for contact retention.

Contact size	Axial load (pounds-minimum)	
	Series 1	Series 2
20	15	20
16	25	25
12	25	30
8	40	40

3.6.33 Contact engaging and separating forces (series 1). When tested as specified in 4.6.33, socket contacts shall comply with the engagement and separation forces of table XII.

Source: https://assist.dla.mil -- Downloaded: 2016-11-16T06:23Z
Check the source to verify that this is the current version before use.

TABLE XII. Contact engaging and separating forces (series 1).

Contact mating end size	Minimum separation force (ounces) Minimum diameter MS3197 pin	Maximum average engagement force (ounces) Maximum diameter MS3197 pin	Maximum engagement force (ounces) Maximum diameter MS3197 pin
20	0.75	12	18
16	2	24	30
12	3	24	30

3.6.34 Probe damage (series 1). When tested as specified in 4.6.34, socket contacts shall meet the requirements of 3.6.33.

3.6.35 Cover chain, tensile strength (series 1). When tested as specified in 4.6.35, protective covers with chains shall withstand a 25-pound tensile test without damage.

3.6.36 Altitude immersion (series 2). When connectors are tested as specified in 4.6.36, the insulation resistance shall not be less than 1,000 megohms and the connector shall show no evidence of breakdown, flashover or corona when subjected to a minimum of 1,500 volts root mean square (rms). Maximum leakage current during the dielectric withstanding voltage test shall be 2 milliamperes.

3.6.37 Temperature life (series 2, class H). When tested as specified in 4.6.37 for 1,000 hours at 200°C, the contact resistance shall meet the requirements of 3.6.5.2.

3.6.37.1 Temperature life with contact loading (series 2, classes L and N). When tested as specified in 4.6.37.1, the contacts shall maintain their specified locations as shown on figure 11 and there shall be no electrical discontinuity in excess of 1 microsecond.

3.6.38 Ozone exposure (series 2). When connectors are tested as specified in 4.6.38, there shall be no evidence of cracking of materials or other damage that will adversely affect the subsequent performance of the connectors in the applicable test sequence.

3.6.39 Shell conductivity (series 2, except class A). When tested as specified in 4.6.39, mated plugs and receptacles shall be electrically conductive from the plug accessory thread to the receptacle mounting flange or to the accessory thread on the cable connecting plug. The overall dc resistance shall not exceed .2 ohm. The overall dc resistance for RFI plug connectors (with grounding fingers) shall not exceed .005 ohm

3.6.40 Insert grommet bonding (series 2, class L). Specimens of the insert grommet bonded assembly and the insert interfacial seal bonded assembly shall be subjected to the test specified in 4.6.40. There shall be evidence of cohesive failure of the insert face seal, grommet or insert material rather than complete adhesive failure of bond. The test shall be conducted using only the complete insert assemblies in their final form prior to assembly into the connector shell.

3.6.41 External bending moment (series 2, class L). When tested as specified in 4.6.41 using the applicable bending moment shown in table XIII, connectors shall show no evidence of damage detrimental to their normal operation nor shall there be any interruption of electrical continuity.

Source: https://assist.dla.mil -- Downloaded: 2016-11-16T06:23Z
Check the source to verify that this is the current version before use.

TABLE XIII. External bending moment (series 2).

Shell size	Bending moment (inch-pounds)
8	59
10	230
12	290
14	350
16	419
18	433
20	450
22	475
24	500

3.6.42 Pin contact stability (series 2, class L). When tested as specified in 4.6.42, the total displacement of the contact tip end shall not exceed the amount shown in table XIV.

TABLE XIV. Contact stability (series 2).

Contact size	Total displacement (inch)
20	.038
16	.052
12	.062

3.6.43 RFI shielding (series 2, RFI plugs only, except class A). When tested as specified in 4.6.43, the RFI shielding capabilities of the shells shall not be less than that specified in table XV at the specified frequencies.

TABLE XV. RFI shielding effectiveness.

Frequency	Leakage attenuation	Frequency	Leakage attenuation
MHz	dB	MHz	dB
100	65	400	55
150	60	600	50
200	60	800	45
300	55	1,000	45

3.6.44 RFI finger spring force (series 2, class L, except class A). When tested as specified in 4.6.44, the plug and receptacle axial mating force shall be in accordance with table XVI.

TABLE XVI. RFI finger spring force (series 2, class L).

Shell size	Axial force	
	Maximum	Minimum
	lbs	lbs
8 and 10	15	2
12 and 14	20	2
16 thru 24	30	2

3.6.45 Insertion removal tool abuse (series 2, classes L and N). When tested as specified in 4.6.45, there shall be no damage to the contacts, the connector insert, or the contact retaining mechanism. The connectors shall meet the requirements of subsequent testing.

Source: https://assist.dla.mil -- Downloaded: 2016-11-16T06:23Z
Check the source to verify that this is the current version before use.

3.6.46 Contact walk-out (series 2, classes L and N). When tested as specified in 4.6.46, contacts shall not become dislodged from their normal position.

3.6.47 Accessory thread strength (series 2, class L). When tested as specified in 4.6.47, the accessory threads and portion of the connector that accepts cable clamp and "J" adapters shall be capable of withstanding torques per table XXVIII.

3.7 Marking.

3.7.1 Connector marking (series 1). Each connector shall be legibly and permanently marked on the shell or coupling ring in accordance with MIL-STD-1285. The MS standard part number shall be as shown in 1.2.1.

3.7.2 Insert marking. Inserts shall be marked as illustrated in MIL-STD-1669. Raised or depressed characters shall not be used on mating faces.

3.7.2.1 Contact designation. Contact locations shall be designated by identifiable characters of contrasting color on the front and rear faces of the insert or insert assembly. Positioning and arrangement of the characters shall be such that the appropriate contact cavity be readily identifiable. On the rear face of solder contact inserts, those individual contact designations may be omitted where space limitations render identifiability marginal. Eighty percent of the characters on any face of the connectors shall remain identifiable after completion of the tests specified in the qualification tables.

3.7.3 Grommet marking. Wire openings on the rear face of grommets shall be marked with legible characters corresponding to the insert contact designators. On grommets of solder contact connectors it is permissible to identify, where space limitations dictate, only those wire openings which are located on the vertical centerline.

3.7.4 Connector marking (series 2). The connector shall be clearly and permanently marked in the location specified (see 3.1). The characters shall be a minimum of .037 inch in height. Each connector shall be marked on the shell or coupling ring with manufacturer's name or trademark, the appropriate MS part number, the appropriate M83723 part number, if applicable (see 3.1), and the date of manufacture (year and week). For connector shell sizes 8 and 10, only the MIL-C-26482 number need be used. However, the packaging shall include both numbers. In addition, all connectors shall be marked around the periphery of the shell with a blue color band to identify the connectors as having the rear release contact system. The location of the blue band shall be as specified (see 3.1).

3.8 Workmanship. Connectors and accessories shall meet all design dimensions and intermateability requirements of this specification. Loose contacts, poor molding fabrication, loose materials, defective bonding, damaged or improperly assembled contact, peeling, or chipping of plating or finish, galling of mating parts, nicks and burrs of metal parts and post molding warpage will be considered adequate basis for rejection of items of quality inferior for the purpose intended. Emphasis shall be on the quality of the molded dielectric retention system parts.

4. QUALITY ASSURANCE PROVISIONS

4.1 Responsibility for inspection. Unless otherwise specified in the contract or purchase order, the supplier is responsible for the performance of all inspection requirements as specified herein. Except as otherwise specified in the contract or order, the supplier may use his own or any other facilities suitable for the performance of the inspection requirements specified herein, unless disapproved by the Government. The Government reserves the right to perform any of the inspections set forth in the specification where such inspections are deemed necessary to assure supplies and services conform to prescribed requirements.

Source: https://assist.dla.mil -- Downloaded: 2016-11-16T06:23Z
Check the source to verify that this is the current version before use.

4.1.1 Test equipment and inspection facilities. Test and measuring equipment and inspection facilities of sufficient accuracy, quality and quantity to permit performance of the required inspection shall be established and maintained by the supplier. The establishment and maintenance of a calibration system to control the accuracy of the measuring and test equipment shall be in accordance with MIL-C-45662.

4.1.2 Assembly plants. Assembly plants must be listed on or approved for listing on the applicable Qualified Products List. The qualified connector manufacturer shall certify that the assembly plant is approved for the distribution of the manufacturer's parts. The assembly plant shall use only piece parts supplied by the qualified connector manufacturer. No testing other than visual examination is required of certified piece parts obtained from the qualified connector manufacturer, except when there is cause for rejection. Assemblies produced at the assembly plant shall be subjected to inspection to assure that the assembly process conforms with that established at the qualified manufacturing plant. Quality control requirements, including Government inspection surveillance, shall be the same as required for the qualified connector manufacturer.

4.2 Classification of inspection. The inspection of connectors shall be classified as follows:

(a) Qualification inspection (see 4.3).
(b) Quality conformance inspection (see 4.4).

4.2.1 Inspection conditions. Unless otherwise specified, tests and examinations required by this specification shall be performed under any combination of conditions within the following ranges. Any specified condition shall not affect the other two ambient ranges.

Temperature: 15° to 35°C (59° to 95°F).
Relative humidity: 30 to 80 percent.
Barometric pressure: 650 to 800 mm of mercury.

4.3 Qualification inspection. Qualification inspection shall be performed at a laboratory acceptable to the Government (see 6.5) on sample units produced with equipment and procedures normally used in production. After receipt of the letter of authorization from the activity responsible for qualification, the applicant shall submit to the qualifying activity three copies of his test reports (certified by the Government inspector indicating the extent to which the tests were witnessed), together with samples required by the qualifying activity.

4.3.1 Qualification of additional connectors. For connectors of the same series which have identical contacts and differ only in shell size and/or configuration from those which have been previously qualified (or are currently being qualified), the supplier's test report need only provide test data necessary to validate the differing feature(s). In addition, connectors which differ in shell size shall be subjected to the following tests and the results shall be forwarded to the qualifying activity:

Test	Requirement paragraph	Test paragraph
Examination of product	3.1, 3.7.4, and 3.8	4.6.1
Operating forces	3.6.3	4.6.4
Final examination of product	3.7.4	4.6.49
External bending moment (series 2, class L only)	3.6.41	4.6.41

Qualification of series 1 connectors under the provisions above shall not admit qualification of series 2 connectors, nor shall qualification of series 2 connectors admit qualification of series 1 connectors. Qualification approval may be granted upon successful completion of the above inspections and tests conducted on the samples of 4.3.2; such approval shall include classes, finishes, shell configurations, and insert arrangements other than those actually tested provided that the capability to manufacture these parts is demonstrated by providing exhibit samples.

Source: https://assist.dla.mil -- Downloaded: 2016-11-16T06:23Z
Check the source to verify that this is the current version before use.

4.3.2 Qualification samples. Samples of each class for which qualification is desired shall be tested in the sequence specified in table XVIII or XIX, as applicable. Each connector subjected to qualification testing shall be provided with a counterpart connector for those tests requiring mating assemblies. The counterpart connectors provided for this purpose shall be new, previously qualified connectors or new connectors submitted for qualification testing. Manufacturers not producing mating connectors shall submit data substantiating that tests were performed with approved counterpart connectors. Specific details on preparation of samples shall be as follows:

4.3.2.1 Series 1. A sufficient number of connectors shall be supplied to provide a minimum of 110 contact cavities of the size of contacts for which qualification of the crimp contact retention feature is desired.

4.3.2.1.1 Wire-to-contact assembly. Where wired contacts are required, terminations shall be accomplished as follows.

4.3.2.1.1.1 Solder contacts. Solder in accordance with MIL-STD-454, requirement 5, shall be used.

4.3.2.1.1.2 Crimp contacts. A class I crimping tool conforming to M22520/1-01 or M22520/2-01 in accordance with MIL-C-22520 shall be used, as applicable.

4.3.2.1.2 Connector assemblies (classes E, F and P). Three complete connector assemblies, class E wall-mount receptacles and class F straight plugs, with insert arrangements in the densest configuration of each voltage rating for which qualification is desired, in each shell size, shall be provided. Separate samples are required for crimp-contact connectors and solder-contact connectors. Crimp contacts shall be supplied but shall not be installed in connectors submitted for qualification testing.

(a) One sample shall have pin contacts in the plug and socket contacts in the receptacle. Both halves shall be wired with approximately 3 feet of wire approaching the minimum OD specified in table II. These samples shall be subjected to the tests of table XVIII, group 1.
(b) The other samples shall have socket contacts in the plug and pin contacts in the receptacle. Both halves shall be wired with approximately 3 feet of wire approaching the maximum OD specified in table II. These samples shall be divided into two groups and shall be subjected to all the tests of table XVIII, groups 2 and 3. One group of connectors is to be assigned to each test sequence.
(c) Qualification of these samples shall admit qualification of other types and the balance of insert patterns in classes E, F and P by similarity. If qualification of class E or F is not sought, samples of class P shall be substituted for class E or F in the foregoing, except that nominal gage wire may be used.

4.3.2.1.3 Connector assemblies (class H). Three class H receptacles, with insert arrangements in the densest configuration of each voltage rating for which qualification is desired, in each shell size and contact style shall be provided, together with counterpart class E straight plugs.

(a) All halves shall be wired with approximately 3 feet of wire of nominal gage.
(b) The samples shall be divided into three equal groups and shall be subjected to all the tests of the table XVIII, groups 4, 5, and 6, one group of connectors to be assigned to each test sequence. Qualification of these samples will admit qualification of other types and the balance of insert patterns in class H by similarity.

Source: https://assist.dla.mil -- Downloaded: 2016-11-16T06:23Z
Check the source to verify that this is the current version before use.

4.3.2.1.4 Connector assemblies (class J). One mated pair of class J connector assemblies, in each shell size, shall be subjected to the tests of table XVIII, group 10.

(a) The connectors need not be wired but shall be assembled using a solid polychloroprene cylinder of suitable length and OD in accordance with table XVII. The Shore A durometer of the test cylinder shall be from 75 to 85.

(b) Qualification of these samples will admit qualification of all class J assemblies if class E are being qualified at the same time or have previously been qualified to this specification. If not, class J assemblies shall be subjected to all of the tests of table XVIII, groups 1 and 2.

TABLE XVII. Test cylinder OD sizes.

Shell size	Diameter ±0.016 inch
8	0.214
10	.250
12	.384
14	.462
16	.596
18	.646
20	.681
22	.716
24	.817

4.3.2.1.5 Socket contacts. Fifty of each socket contact configuration, except crimp type, shall be subjected to the tests of table XVIII, group 7. Sockets which are not completely assembled prior to installation in the insert (e.g., class H, socket style), may be provided and tested in connectors.

4.3.2.1.6 Protective covers. Two protective covers of each shell size with mating class E connectors, shall be subjected to the tests of table XVIII, group 8.

4.3.2.1.7 Stowage receptacles. Two stowage receptacles of each size, with mating class E connectors, shall be subjected to the tests of table XVIII, group 8.

4.3.2.1.8 Crimp connectors. Connectors supplied in accordance with 4.3.2.1 shall be subjected to the tests specified in table XVIII, group 9.

4.3.2.2 Series 2.

4.3.2.2.1 Connector assemblies (class L). Seven complete connector assemblies shall be provided for test groups 1 through 7 of table XIX. Connectors shall be wired with approximately three feet of wire and provided with suitable backshells. A class I crimping tool conforming to M22520/1-01 or M22520/2-01 shall be used for termination of the wire to the crimp contacts. One RFI plug together with a suitable counterpart receptacle shall be provided for test group 8 of table XIX. Five additional connectors shall be provided for the fluid immersion test of 4.6.2.8.1. The full complement of contacts shall be installed but need not be wired. Individual sample assembly shall be as follows:

Test group	Wire diameter (approaching)	Contacts Plug	Contacts Receptacle	Backshells (Plugs and receptacles)
1	Minimum	Socket	Pin	90°
2	Maximum	Socket	Pin	90°
3	Minimum	Pin	Socket	Straight with strain relief
4	Maximum	Socket	Pin	90°
5	Minimum	Pin	Socket	Straight
6	Maximum	Pin	Socket	Straight
7	Maximum	Pin	Socket	Straight with strain relief
8	As required	Socket	Pin	None

Source: https://assist.dla.mil -- Downloaded: 2016-11-16T06:23Z
Check the source to verify that this is the current version before use.

4.3.2.2.1.1 Intermateability samples (class L). One complete series 2 connector assembly shall be provided along with a complete counterpart series 1 connector assembly for test group 9 of table XIX. The series 2 plug shall be mated with the series 1 receptacle and the series 1 plug with the series 2 receptacle. The samples shall have socket contacts in the plugs and pin contacts in the receptacles, and shall be fully wired with applicable nominal diameter wire (approximate).

4.3.2.2.2 Hermetic receptacles (classes H and N). Seven hermetic receptacles together with suitable counterpart plugs shall be provided for test groups 1 through 7 of table XX. An additional hermetic receptacle together with a suitable counterpart series 1 plug shall be provided for test group 9 of table XIX. Five additional connectors shall be provided for the fluid immersion test of 4.6.28.1. All samples shall be fully wired with applicable nominal diameter wire (approximate). Termination of wire to class H receptacles shall be accomplished with solder conforming to QQ-S-571. Termination of wire to crimp contacts of class N receptacles shall be accomplished with a class 1 crimping tool conforming to M22520/1-01 or M22520/2-01.

4.3.2.2.3 Samples for retention system tests (classes L and N). Seven complete connector assemblies shall be provided for test groups 1 through 7 of table XXI. (Wire sealing grommets may be removed at the option of the test facility.) Class N samples shall consist of receptacles only. Contacts shall be wired with nominal diameter wire unless otherwise specified in the test paragraph.

4.3.3 Qualification rejection. There shall be no failures during any examination or tests of the connectors or accessories submitted for qualification tests. After notification of any failure, the activity responsible for qualification testing shall receive details of corrective action from the manufacturer before initiating any further tests deemed necessary to assure compliance with connector requirements.

Source: https://assist.dla.mil -- Downloaded: 2016-11-16T06:23Z
Check the source to verify that this is the current version before use.

TABLE XVIII. Qualification inspection (series 1).

Examination or test	Requirement paragraph	Method paragraph	Test group 1	2	3	4	5	6
Examination of product	3.1,3.7 & 3.8	4.6.1	X	X	X	X	X	X
Maintenance aging	3.6.1	4.6.2	X	-	-	-	-	-
Contact insertion and removal forces	3.6.10	4.6.11	X	-	-	-	-	-
Contact retention	3.6.32	4.6.32	X	-	-	-	-	-
Mating and unmating forces	3.6.2	4.6.3	X	X	X	X	X	X
Insulation resistance at ambient temperature	3.6.6.1	4.6.7.1	X	X	X	X	X	X
Dielectric withstanding voltage (sea level)	3.6.8	4.6.9.1	X	X	X	X	X	X
Dielectric withstanding voltage (altitude)	3.6.8	4.6.9.2	-	X	X	X	X	X
Contact resistance	3.6.4	4.6.5	-	X	X	-	X	X
Thermal shock	3.6.12	4.6.12	X	-	-	X	-	-
Air leakage	3.6.15.1	4.6.15.1	X	-	-	-	-	-
Air leakage (hermetic)	3.6.15.2	4.6.15.2	-	-	-	X	-	-
Insulation resistance at elevated temperature								
Short time	3.6.6.2	4.6.7.2	-	X	-	-	-	-
Long time	3.6.6.3	4.6.7.3	-	-	X	-	-	-
Durability	3.6.17	4.6.17	X	-	-	X	-	-
Vibration	3.6.21	4.6.21	X	-	-	X	-	-
Shock (specified pulse)	3.6.23	4.6.23	X	-	-	X	-	-
Humidity	3.6.25	4.6.25	X	-	-	X	-	-
Salt spray (corrosion)	3.6.19	4.6.19	X	-	-	X	-	-
Contact resistance	3.6.4	4.6.5	X	-	-	X	-	-
Mating and unmating forces	3.6 2	4.6.3	X	-	-	X	-	-
Fluid immersion, hydraulic fluid	3.6.27	4.6.27	-	-	X	-	-	X
Fluid immersion, lubricating oil	3.6.27	4.6.27	-	X	-	-	X	-
Mating and unmating forces	3.6.2	4.6.3	-	X	X	-	X	X
Dielectric withstanding voltage (sea level)	3.6.8	4.6.9.1	-	X	X	-	X	X
Contact retention (crimp contacts)	3.6.32	4.6.32.2	X	X	X	-	-	-
Contact retention (solder contacts)	3.6.32	4.6.32.1	X	X	X	-	-	-
Insert retention	3.6.29	4.6.29	X	X	X	-	-	-
Insert retention (hermetic)	3.6.29.1	4.6.29	-	-	-	X	X	X
Final examination of product	3.7.2.1	4.6.49	X	X	X	X	X	X
Group 7 - Solder contacts								
Contact engaging and separating forces	3.6.33	4.6.33						
Probe damage	3.6.34	4.6.34						
Contact engaging and separating forces	3.6.33	4.6.33						
Group 8 - Protective covers and stowage receptacles								
Examination of product	3.1,3.7 & 3.8	4.6.1						
Mating and unmating forces	3.6.2	4.6.3						
Moisture resistance	3.6.25	4.6.25						
Salt spray (corrosion)	3.6.19	4.6.19						
Cover chains, tensile strength	3.6.35	4.6.35						
Air leakage	3.6.15.1	4.6.15.1						
Group 9 - Crimp contact retention feature								
Examination of product	3.1,3.7 & 3.8	4.6.1						
Gage location and retention	3.6.31	4.6.31						
Maintenance aging (contacts only)	3.6.1	4.6.2						
Gage location and retention	3.6.31	4.6.31						
Group 10 - Connector assemblies - class J								
Examination of product	3.1,3.7 & 3.8	4.6.1						
Thermal shock	3.6.12	4.6.12						
Water pressure	3.6.14	4.6.14						
Air leakage	3.6.15.1	4.6.15.1						

Source: https://assist.dla.mil -- Downloaded: 2016-11-16T06:23Z
Check the source to verify that this is the current version before use.

TABLE XIX. Qualification inspection (series 2, class L).

Examination or test	Requirement paragraph	Method paragraph	Test group 1	2	3	4	5	6	7	8
Examination of product	3.1,3.3 thru 3.5,3.7 & 3.8	4.6.1	X	X	X	X	X	X	X	X
Magnetic permeability	3.3.3	4.6.48	X	-	-	-	-	-	-	-
Contact insertion and removal forces	3.6.11	4.6.11	X	X	X	X	X	X	-	-
Contact stability	3.6.42	4.6.42	-	-	-	-	-	-	X	-
Gage location and retention	3.6.31	4.6.31	X	X	X	X	X	X	-	-
RFI finger spring force	3.6.44	4.6.44	-	-	-	-	-	-	-	X
Mating and unmating forces	3.6.3	4.6.4	X	X	X	X	X	X	-	X
Dielectric withstanding voltage - sea level	3.6.9.1	4.6.10.1	X	X	X	X	X	X	-	-
Insulation resistance	3.6.7.1	4.6.8.1	X	X	X	X	X	X	-	-
Shell conductivity	3.6.39	4.6.39	X	X	X	X	X	X	-	X
Thermal shock	3.6.13	4.6.13	X	X	X	X	X	X	-	X
Durability (except RFI plugs)	3.6.18	4.6.18	X	X	-	-	X	X	-	-
Durability (RFI plugs)	3.6.18.1	4.6.18	-	-	-	-	-	-	-	X
Mating and unmating forces 1/	3.6.3	4.6.4	-	-	-	-	-	-	-	X
Vibration	3.6.22	4.6.22	X	-	-	X	-	X	-	-
Physical shock	3.6.24	4.6.24	-	X	-	X	-	-	-	-
Temperature life	3.6.37.1	4.6.37.1	-	-	X	-	-	-	-	-
Humidity	3.6.26	4.6.26	-	-	X	-	X	-	-	-
Insert retention	3.6.30	4.6.30	-	-	X	X	-	-	-	-
Salt spray (corrosion)	3.6.20	4.6.20	-	-	-	-	-	X	-	-
Ozone exposure	3.6.38	4.6.38	-	-	-	-	-	X	-	-
Fluid immersion (class L)	3.6.28	4.6.28	X	X	X	X	X	X	X	-
Altitude immersion	3.6.36	4.6.36	X	X	-	-	-	-	-	-
Mating and unmating forces 1/	3.6.3	4.6.4	X	X	X	X	X	X	-	-
Contact retention (class L)	3.6.32	4.6.32	X	X	X	-	-	X	X	-
Dielectric withstanding voltage - sea level (class L)	3.6.9.1	4.6.10.1	-	-	X	-	-	X	X	-
Dielectric withstanding voltage - altitude	3.6.9.2	4.6.10.2	X	X	X	X	X	X	-	-
RFI shielding (RFI plugs)	3.6.43	4.6.43	-	-	-	-	-	-	-	X
Shell conductivity	3.6.39	4.6.39	X	X	X	X	X	X		X
Insulation resistance	3.6.7.1	4.6.8.1	-	-	-	-	-	X	-	-
Insulation resistance - high temperature	3.6.7.2	4.6.8.2	X	X	X	X	X	X	-	-
Contact resistance	3.6.5	4.6.6	X	X	X	X	X	X	-	-
Insert grommet bonding	3.6.40	4.6.40	-	-	-	-	-	-	X	-
Final examination of product	3.7.4	4.6.49	X	X	X	X	X	X	X	X
External bending moment	3.6.41	4.6.41	-	-	-	-	-	-	X	-
Accessory thread strength	3.6.47	4.6.47	X	-	-	-	-	-	-	-
Group 9 - Intermateability test (Series 2 with series 1) (see 3.5.1)										
Examination of product	3.1,3.3 thru 3.5,3.7 & 3.8	4.6.1								
Mating and unmating forces	3.6.2	4.6.3								
Durability	3.6.17	4.6.17								
Mating and unmating forces	3.6.2	4.6.3								
Vibration	3.6.21	4.6.21								
Shock (specified pulse)	3.6.23	4.6.23								
Humidity	3.6.25	4.6.25								
Dielectric withstanding voltage - altitude	3.6.8	4.6.9.2								
Final examination of product	3.1,3.3 thru 3.5,3.7 & 3.8	4.6.1								

1/ Conditioning mating and unmating cycles are not required for this test. Conduct torque measurement only.

Source: https://assist.dla.mil -- Downloaded: 2016-11-16T06:23Z
Check the source to verify that this is the current version before use.

TABLE XX. Qualification inspection (series 2, classes H and N).

Examination or test	Requirement paragraph	Method paragraph	Test group 1	2	3	4	5	6	7
Examination of product	3.1,3.3 thru 3.5,3.7 & 3.8	4.6.1	X	X	X	X	X	X	X
Contact insertion and removal forces 1/	3.6.11	4.6.11	X	X	X	X	X	X	-
Contact retention	3.6.32	4.6.32	X	X	X	X	X	X	-
Mating and unmating forces	3.6.3	4.6.4	X	X	X	X	X	X	-
Dielectric withstanding voltage - sea level	3.6.9.1	4.6.10.1	-	X	X	X	X	X	X
Insulation resistance	3.6.7.1	4.6.8.2	X	X	X	X	X	X	-
Shell conductivity	3.6.39	4.6.39	X	X	X	X	X	X	-
Thermal shock	3.6.13	4.6.13	X	X	X	X	X	X	-
Durability	3.6.18	4.6.18	X	X	-	-	X	X	-
Vibration	3.6.22	4.6.22	X	-	-	X	-	X	-
Physical shock	3.6.24	4.6.24	-	X	-	X	-	X	-
Temperature life (class H)	3.6.37	4.6.37	-	-	X	-	-	-	-
Temperature life (class N)	3.6.37.1	4.6.37.1	-	-	X	-	-	-	-
Humidity	3.6.26	4.6.26	-	-	X	-	X	-	-
Insert retention	3.6.30.1	4.6.30.1	-	-	X	X	-	-	-
Salt spray (corrosion)	3.6.20	4.6.20	-	-	-	-	-	X	-
Ozone exposure	3.6.38	4.6.38	-	-	-	-	-	X	-
Fluid immersion 2/	3.6.28	4.6.28	X	X	X	X	X	X	X
Altitude immersion	3.6.36	4.6.36	X	X	-	-	-	-	-
Mating and unmating forces 3/	3.6.3	4.6.4	X	X	X	X	X	X	-
Contact retention	3.6.32	4.6.32	X	-	X	-	-	-	-
Dielectric withstanding voltage - sea level	3.6.9.1	4.6.10.1	-	-	-	-	-	X	-
Dielectric withstanding voltage - altitude	3.6.9.2	4.6.10.2	X	X	X	X	X	X	-
Shell conductivity	3.6.39	4.6.39	X	X	X	X	-	X	-
Insulation resistance - room ambient	3.6.7.1	4.6.8.1	-	-	-	-	-	X	-
Insulation resistance - high temperature	3.6.7.2	4.6.8.2	X	X	X	X	X	X	-
Contact resistance	3.6.5.2	4.6.6	X	X	X	X	X	X	X
Final examination of product	3.7.4	4.6.49	X	X	X	X	X	X	-
Air leakage	3.6.16	4.6.16	X	X	X	X	X	-	-

1/ Class N only.
2/ Counterpart plugs may be exempted or suitably protected.
3/ Conditioning mating and unmating cycles are not required for this test. Conduct torque measurement only.

TABLE XXI. Retention system qualification (series 2, classes L and N).

Examination or test	Requirement paragraph	Method paragraph	Test group 1	2	3	4	5	6	7
Examination of product	3.1,3.3 thru 3.5,3.7 & 3.8	4.6.1	X	X	X	X	X	X	X
Retention system fluid immersion	3.6.28.1	4.6.28.2	X	X	X	X	X	X	X
Contact insertion and removal forces	3.6.11	4.6.11	X	X	X	X	X	X	X
Insertion/removal tool abuse	3.6.45	4.6.46	-	-	-	-	-	X	-
Contact retention	3.6.32	4.6.32	X	X	X	X	X	X	X
Contact walk-out	3.6.46	4.6.47	-	-	-	-	-	-	X
Final examination of product	3.7.4	4.6.49	X	X	X	X	X	X	X

Source: https://assist.dla.mil -- Downloaded: 2016-11-16T06:23Z
Check the source to verify that this is the current version before use.

4.4 Quality conformance inspection.

4.4.1 Inspection of product for delivery. Inspection of product for delivery shall consist of groups A and B inspection.

4.4.2 Inspection lot. An inspection lot shall consist of all connectors covered by the same MS standards, produced under essentially the same conditions, and offered for inspection at one time. In-process controls, unrelated to lot sizes of finished connectors, may be used, provided an equivalent or tighter AQL level is maintained.

4.4.2.1 Group A inspection. Group A inspection shall consist of the examination of product in accordance with 4.6.1. In addition, class H (series 1) connectors shall be subjected to the air leakage test (see 4.6.15.2), and class H and class N (series 2) connectors shall be subjected to the air leakage test (see 4.6.16).

4.4.2.1.1 Sampling plan. Statistical sampling and inspection shall be in accordance with MIL-STD-105 for general inspection level II. The acceptable quality level (AQL) shall be 1.0 for major defects and 4.0 for minor defects. Major and minor defects shall be as defined in MIL-STD-105.

4.4.2.1.2 Rejected lots. If an inspection lot is rejected, the supplier may rework it to correct the defects, or screen out the defective units, and resubmit for inspection. Resubmitted lots shall be inspected using tightened inspection. Such lots shall be kept separate and shall be clearly identified as reinspected lots.

4.4.2.2 Group B inspection. Group B inspection shall consist of the applicable tests specified in table XXII, and shall be made on sample units which have been subjected to and have passed the group A inspection.

TABLE XXII. Group B inspection.

Test	Requirement paragraph	Method paragraph
Dielectric withstanding voltage (series 1, except solder type)	3.6.8	4.6.9.3
Dielectric withstanding voltage (series 2, except class H)	3.6.9.1	4.6.10.3
Insulation resistance (series 1, except solder type)	3.6.6.1	4.6.7.4
Insulation resistance (series 2, except class H)	3.6.7.1	4.6.8.3
Gage location and retention	3.6.31	4.6.31

4.4.2.2.1 Sampling plan. The sampling plan shall be in accordance with MIL-STD-105 for special inspection level S-4. The sample size shall be based on the inspection lot size from which the sample was selected for group A inspection. The AQL shall be 2.5 percent defective.

4.4.2.2.2 Rejected lots. If an inspection lot is rejected, the supplier may rework it to correct the defects, or screen out the defective units, and resubmit for reinspection. Resubmitted lots shall be inspected using tightened inspection. Such lots shall be separate from new lots, and shall be clearly identified as reinspected lots.

4.4.2.2.3 Disposition of sample units Sample units which have passed all the group B inspection may be delivered on the contract or purchase order.

4.4.3 Inspection of preparation for delivery Sample packages and packs and the inspection of the preservation-packaging, packing and marking for shipment and storage shall be in accordance with the requirements of MIL-C-55330.

4.5 Qualification verification inspection Qualification verification inspection shall consist of group C. Except where the results of these inspections show noncompliance with the applicable requirements (see 4.5.1.1.5), delivery of products which have passed group B shall not be delayed pending the results of these qualification verification inspections

Source: https://assist.dla.mil -- Downloaded: 2016-11-16T06:23Z
Check the source to verify that this is the current version before use.

4.5.1 Group C inspection. Group C inspection shall consist of the tests specified in tables XXIII and XXIV in the order shown. Group C inspection shall be made on sample units selected from inspection lots which have passed the groups A and B inspection.

4.5.1.1 Sampling plan. Every 18 months, mated connector sample units which have passed group A inspection shall be subjected to the tests specified in tables XXIII and XXIV. Samples shall be selected in sufficient quantity to provide two samples per applicable test group (tables XXIII and XXIV), as determined by the series (1 or 2) and the class of the samples to be tested.

TABLE XXIII. Group C inspection (series 1).

Test	Requirement paragraph	Method paragraph	Test group					
			1	2	3	4	5	6
Contact retention (solder contacts)	3.6.32	4.6.32.1	X	X	-	-	X	X
Durability	3.6.17	4.6.17	X	-	X	-	X	-
Humidity	3.6.25	4.6.25	X	-	X	-	-	-
Water pressure	3.6.14	4.6.14	-	-	-	-	X	-
Air leakage (solder contacts)	3.6.15.1	4.6.15.1	X	X	-	-	X	X
Salt spray (corrosion)	3.6.19	4.6.19	-	X	-	X	-	X
Mating and unmating forces	3.6.2	4.6.3	X	X	-	-	X	X

TABLE XXIV. Group C inspection (series 2).

Test	Requirement paragraph	Method paragraph	Test group					
			1	2	3	4	5	6
Gage location and retention	3.6.31	4.6.31	X	X	-	-	-	-
RFI finger spring force	3.6.44	4.6.44	-	-	-	-	X	-
Shell conductivity	3.6.39	4.6.39	-	-	-	-	X	-
Durability	3.6.18	4.6.18	X	-	X	-	X	-
Mating and unmating forces	3.6.3	4.6.4	X	-	-	X	X	X
Humidity	3.6.26	4.6.26	X	-	X	-	-	-
Salt spray (corrosion)	3.6.20	4.6.20	-	X	-	X	-	X
Mating and unmating forces	3.6.3	4.6.4	X	X	-	X	X	X

4.5.1.1.1 Connector assemblies (series 1). For group C testing, series 1 connectors shall be provided as follows:

(a) Class E, F or P - Separate samples (complete connector assemblies) are required for crimp-contact connectors and solder-contact connectors. Four samples shall be provided. Two samples shall have pin contacts in the plug and socket contacts in the receptacle, and shall be wired with approximately three feet of wire approaching the minimum OD specified in table II. The other two samples shall have socket contacts in the plug and pin contacts in the receptacle, and shall be wired with approximately three feet of wire approaching the maximum OD specified in table II. Two of the samples (one with minimum wire and one with maximum wire) shall be subject to test group 1 of table XXIII. The other two samples shall be subjected to test group 2 of table XXIII.

(b) Class H - Four samples shall be provided together with counterpart class E straight plugs. The connectors shall be wired with approximately three feet of wire of nominal gage specified in table II. The samples shall be subjected to test groups 3 and 4 of table XXIII.

(c) Class J - Four mated pairs of class J connectors, assembled in accordance with 4.3.2.1.4(a), shall be divided into two equal groups and shall be subjected to test groups 5 and 6 of table XXIII.

Source: https://assist.dla.mil -- Downloaded: 2016-11-16T06:23Z
Check the source to verify that this is the current version before use.

4.5.1.1.2 Connector assemblies (series 2). For group C testing, series 2 connectors shall be provided as follows:

(a) Class L - Four complete connector assemblies shall be provided. Two of each shall have pin contacts in the plug and socket contacts in the receptacle, and shall be wired with approximately three feet of wire approaching the applicable minimum OD specified in table II. The remaining samples shall have socket contacts in the plug and pin contacts in the receptacle, and shall be wired with approximately three feet of wire approaching the applicable maximum OD specified in table II. Fifty percent of the samples with pin contacts in the plug and fifty percent of the samples with socket contacts in the plug shall be subjected to the tests of table XXIV, group 1. The balance of the samples shall be subjected to the tests of table XXIV, test group 2.

(b) Classes H and N - Four samples of each class shall be provided, together with counterpart class L plugs. Two samples of each class shall be wired with wire of nominal gage within the applicable range of table II and subjected to the tests of table XXIV, group 3. The balance of the samples shall have the full complement of contacts installed in the plugs but need not be wired. These shall be subjected to the tests of table XXIV, test group 4.

(c) RFI plugs - Four samples of class L shall be provided, together with counterpart receptacles. These samples shall have a full complement of contacts installed but need not be wired. The samples shall be divided into two equal groups and shall be subjected to the tests of table XXIV, test groups 5 and 6.

4.5.1.1.3 Failures. If one or more sample units fail to pass group C inspection, the sample shall be considered to have failed.

4.5.1.1.4 Disposition of sample units. Sample units which have been subjected to group C inspection shall not be delivered on the contract or purchase order.

4.5.1.1.5 Noncompliance. If a sample fails to pass group C inspection, the supplier shall take corrective action on the materials or processes, or both, as warranted, and on all units of product which can be corrected and which were manufactured with essentially the same materials, processes, etc., and which are considered subject to the same failure. Acceptance of the product shall be discontinued until corrective action, acceptable to the Government, has been taken. After the corrective action has been taken, group C inspection shall be repeated on additional sample units (all inspection, or the inspection which the original sample failed, at the option of the Government). Groups A and B inspections may be reinstituted; however, final acceptance shall be withheld until the group C reinspection has shown that the corrective action was successful. In the event of failure after reinspection, information concerning the failure and corrective action taken shall be furnished to the cognizant inspection activity and the qualifying activity.

4.5.2 Inspection of preparation for delivery. Sample packages and packs and the inspection of the preservation-packaging, packing and marking for shipment and storage shall be in accordance with the requirements of MIL-C-55330.

4.6 Methods of examination and tests.

4.6.1 Examination of product. The connectors, accessories, and piece parts shall be examined to ensure conformance with this specification and the applicable detail documents not covered by the performance requirements of 3.6. In-process controls of component parts, unrelated to lot sizes of finished connectors, may be utilized in lieu of examination of these components in the finished connectors to assure conformance of these component parts. Visual inspection of each molded contact retention device for molding discrepancies shall be a required inprocess control for all removable contact connectors.

Source: https://assist.dla.mil -- Downloaded: 2016-11-16T06:23Z
Check the source to verify that this is the current version before use.

Examination in a continuing manner shall be performed to assure compliance with the following requirements:

(a) Applicable MS standard.
(b) Materials.
(c) Design and construction.
(d) Interchangeability.
(e) Finish.
(f) Marking.
(g) Workmanship.

4.6.2 Maintenance aging (series 1, crimp contacts only) (see 3.6.1). Connectors shall be tested in accordance with method 2002 of MIL-STD-1344. The following details shall apply:

(a) Contacts shall be removed and reinserted once using the appropriate MS24256 tool.
(b) Connectors shall be mated and unmated 10 times. Contact insertion and removal forces shall be measured on the first and last cycle on half, but not less than three contacts. Maximum forces shall be as specified in table X.

4.6.3 Mating and unmating forces (series 1) (see 3.6.2). Mating connectors shall be tested in accordance with method 2013 of MIL-STD-1344. The following details shall apply:

(a) Rate of mating and unmating shall be one inch-pound per second.
(b) Torque requirements shall be in accordance with table V.

4.6.4 Mating and unmating forces (series 2) (see 3.6.3). Mating connectors shall be tested in accordance with method 2013 of MIL-STD-1344. The following details shall apply:

(a) Rate of mating and unmating shall be one inch-pound per second.
(b) There shall be 10 cycles of mating and unmating and torque shall be measured on the first and last cycle.
(c) Torque requirements shall be in accordance with table VI.

4.6.5 Contact resistance (series 1) (see 3.6.4). Contact resistance shall be measured in accordance with method 3004 of MIL-STD-1344.

4.6.6 Contact resistance (series 2) (see 3.6.5). Contact resistance shall be measured in accordance with method 3004 of MIL-STD-1344.

4.6.7 Insulation resistance (series 1) (see 3.6.6). Unmated connectors shall be tested in accordance with method 3003 of MIL-STD-1344.

4.6.7.1 At ambient temperature (see 3.6.6.1). The following details shall apply:

(a) Measurement shall be made between all, but not more than 6, pairs of adjacent contacts and between all, but not more than 6, contacts adjacent to the shell, and the shell. Contacts selected shall be those having the closest spacing between measuring points. Temperature shall be 25 ±3°C.

4.6.7.2 At elevated temperature (short time) (see 3.6.6.2). The details of 4.6.7.1 and the following details shall apply:

(a) Connectors shall be exposed to a temperature of 125 ±3°C for 250 hours. During this period, at least eight measurements shall be recorded at intervals of not less than 24 hours. After the completion of the 250 hours and while at 125 ±3°C, measurements shall be recorded on all samples.

Source: https://assist.dla.mil -- Downloaded: 2016-11-16T06:23Z
Check the source to verify that this is the current version before use.

4.6.7.3 At elevated temperature (long time (see 3.6.6.3). The details of 4.6.7.1 and the following details shall apply:

(a) The connectors shall be exposed to a temperature of 105 ±3°C for 1,000 hours. At the end of this period and while the connectors are still at elevated temperature, measurements shall be recorded.

4.6.7.4 Group B inspection. The procedure of 4.6.7.1 shall apply except simulated contacts may be used and measurements need only be made between at least one pair of adjacent contacts and between one peripheral contact and the shell.

4.6.8 Insulation resistance (series 2) (see 3.6.7). Wired, unmated connectors shall be tested in accordance with method 3003 of MIL-STD-1344.

4.6.8.1 At ambient temperature (see 3.6.7.1). The following details shall apply:

(a) Measurements shall be made between each wired contact and all other wired contacts and the shell electrically connected together.

4.6.8.2 At elevated temperature (see 3.6.7.2). The details of 4.6.8.1 and the following details shall apply:

(a) Connectors shall be exposed to a temperature of 200 ±3°C for a minimum of 30 minutes. Measurements shall then be recorded while the connectors are still at the elevated temperature.

4.6.8.3 Group B inspection. The procedure of 4.6.8.1 shall apply except simulated contacts may be used and the measurements shall be made between at least one pair of adjacent contacts and between one peripheral contact and the shell.

4.6.9 Dielectric withstanding voltage (series 1) (see 3.6.8). Unmated connectors shall be tested in accordance with method 3001 of MIL-STD-1344.

4.6.9.1 At sea level (see 3.6.8). The following details shall apply:

(a) The applicable test voltage of table XXV shall be applied between all adjacent contacts and between the shell and each peripheral contact for a minimum of five seconds. If an insert possesses two service ratings, similar connections shall be made for the different test voltages, as necessary

4.6.9.2 At altitude (see 3.6.8). The details of 4.6.9.1 and the following details shall apply:

(a) Connectors shall be tested after 30 minutes at the simulated altitude of of table XXV.
(b) Only the engaging face of classes H and J shall be subjected to the high altitude. The rear faces shall be suitably protected.

4.6.9.3 Group B inspection. The procedure of 4.6.9.1 shall apply except simulated contacts may be used and the period of application of test voltage shall be one second minimum.

4.6.10 Dielectric withstanding voltage (series 2) (see 3.6.9). Unmated, wired connectors shall be tested in accordance with method 3001 of MIL-STD-1344.

4.6.10.1 At sea level (see 3.6.9.1). The following details shall apply:

(a) The applicable test voltage of table XXV shall be applied between each contact and each adjacent contact and the shell for a minimum period of one minute at the standard test conditions. Switching transient potentials in excess of the specified test voltage shall not be permitted.

Source: https://assist.dla.mil -- Downloaded: 2016-11-16T06:23Z
Check the source to verify that this is the current version before use.

4.6.10.2 At altitude (see 3.6.9.2). The details of 4.6.10.1 and the following details shall apply:

(a) Connectors shall be placed in a suitable chamber and stabilized for a minimum period of one minute at each altitude specified in table XXV prior to the application of test voltages.
(b) The rear faces of classes H and N connectors shall be suitably protected.

TABLE XXV. Dielectric withstanding voltage.

Altitude (ft)	Minimum test voltages, ac (rms)	
	Service rating I	Service rating II
Sea level	1,500	2,300
50,000	500	750
70,000	375	500
110,000	200	200

4.6.10.3 Group B inspection. The procedure of 4.6.10.1 shall apply except simulated contacts may be used and the period of application of test voltage shall be one second minimum.

4.6.11 Contact insertion and removal forces (removable crimp contacts) (see 3.6.10 or 3.6.11). Unmated, wired connectors shall be tested in accordance with method 2012 of MIL-STD-1344. The following details shall apply:

(a) Backshells shall be removed.
(b) Applicable wire of MIL-W-22759 shall be used.

4.6.12 Thermal shock (series 1) (see 3.6.12). Unmated connectors shall be tested in accordance with method 1003 of MIL-STD-1344. The following details shall apply:

(a) Test condition letter - B, except the minimum temperature shall be -55°C.

4.6.13 Thermal shock (series 2) (see 3.6.13). Mated, wired connectors shall be subjected to 5 continuous temperature cycles. The low and high temperature limits shall be $-55\ ^{+0}_{-3}$°C to $200\ ^{+3}_{-0}$°C ($-67\ ^{+0}_{-5}$°F to $392\ ^{+5}_{-0}$°F). Conditions for temperature cycling are as follows:

(a) The first exposure shall be from the standard temperature to the low temperature limit.
(b) At the completion of the required time at low temperature, the connectors shall be transferred to a chamber where the temperature is maintained at the high limit.
(c) Time duration required to change the connectors from one chamber to the other shall not exceed two minutes.
(d) Time duration required for connectors at each temperature limit shall be $30\ ^{+5}_{-0}$ minutes.
(e) Exposure to the low temperature limit and then the high temperature limit shall be considered one cycle.
(f) After exposure.- The connectors shall be returned to the standard ambient temperature for inspection and additional specified tests.

4.6.14 Water pressure (series 1) - (Applicable to solder-type-contact connectors, class E receptacles and class J plugs) (see 3.6.14). The connectors shall be immersed in tap water to a depth of 6 feet for a period of 48 hours in the following manner:

(a) Plugs with "J" adapters shall be assembled to test cylinders (see table XVII) which simulate jacketed cables.

Source: https://assist.dla.mil -- Downloaded: 2016-11-16T06:23Z
Check the source to verify that this is the current version before use.

(b) Class E receptacles shall be mounted by their normal mounting means, with mounting flange gaskets. Jam nut mounting receptacle flanges shall be sealed only with "O" ring seals provided as accompanying hardware. One-half of the wall mounting receptacles shall be front mounted and the remaining half shall be back mounted. The terminal ends of the receptacles shall be external to the tank.

(c) Fifty percent of the connectors tested shall be mated, and insulation resistance of the mated immersed connectors shall be measured and values recorded at the end of the 48-hour period. The other fifty percent of the connectors shall be tested unmated. Upon completion of the test, the connectors shall be removed from the tank, all external moisture removed from the connectors by shaking them at room temperature, and insulation resistance measured and recorded within one-half hour after removal from the water. All mated connectors shall be inspected for internal leakage of water at the connector interface and cable housing. All unmated plugs with "J" adapters shall be inspected for water penetration into the adapter. Class E receptacles, mated and unmated shall be inspected for leakage through or around the insert and for leakage of the panel seals.

4.6.15 Air leakage (series 1) (see 3.6.15).

4.6.15.1 Classes E, F, J, and P. Solder contact receptacles and class J plugs shall be mounted in a manner suitable for application of a 30 lb_f/in^2 pressure differential across the connectors. The leakage rates shall be measured in both directions after 30 minutes of exposure to the low temperature extremes of table XI, and while at the low temperature.

4.6.15.2 Class H. Class H receptacles shall be mounted in a manner suitable for the application of 15 lb_f/in^2 nominal pressure differential across the receptacles and tested in accordance with method 112, test condition C, procedure I of MIL-STD-202. The leakage rate shall be determined while pressurized air or gas, containing not less than 10 percent of helium by volume, is applied to the receptacle.

4.6.15.3 Stowage receptacles and protective covers. Stowage receptacles and protective covers shall be mated to connectors having either contacts or inserts removed so that a pressure of 10 lb_f/in^2 can be applied against the insides of the protective covers or stowage receptacles.

4.6.16 Air leakage (series 2, classes H and N) (see 3.6.16). Classes H and N receptacles shall be mounted in a suitable test apparatus for the application of specified test pressure across the connector. Wires attached to receptacles for any of the previous tests may be removed for this test. A suitable means shall be used for determining the leakage of air, or gas containing not less than 10 percent helium by volume through the connector while the specified test pressures are maintained for a minimum period of 1 minute.

4.6.17 Durability (series 1) (see 3.6.17).- Counterpart connectors shall be mated and unmated 500 times at a rate of 200 ± 100 cycles per hour with the coupling rings operated in a manner to simulate actual service.

4.6.18 Durability (series 2) (see 3.6.18). The wired, assembled plugs and receptacles shall be subjected to the number of cycles of mating and unmating specified in 3.6.18 and 3.6.18.1. The coupling rings shall be operated in a manner to simulate actual service. The plug and receptacle shall be completely separated during each cycle.

Source: https://assist.dla.mil -- Downloaded: 2016-11-16T06:23Z
Check the source to verify that this is the current version before use.

4.6.19 Salt spray (corrosion) (series 1) (see 3.6.19). Unmated connectors and protective covers shall be tested in accordance with method 1001 of MIL-STD-1344. The following details shall apply:

(a) Test condition letter - B.
(b) Connectors shall not be dipped in water after exposure.
(c) Prior to all subsequent tests, corrosion tested connectors shall be engaged and disengaged for one cycle to remove free salt deposits. Contact resistance shall be measured on the first mating of the connector. Corrosion products shall not be removed by brushing or wiping prior to contact resistance test.

4.6.20 Salt spray (corrosion) (series 2) (see 3.6.20). Unmated, wired connectors shall be tested in accordance with method 1001 of MIL-STD-1344. The following details shall apply:

(a) Test condition letter - B.
(b) Class N connectors shall have their rear face suitably protected.

4.6.21 Vibration (series 1) (see 3.6.21). Mated connectors shall be tested in accordance with method 2005 of MIL-STD-1344. The following details shall apply:

(a) Test condition number - III.
(b) All contacts shall be wired in series.
(c) Discontinuity shall be 10 microseconds maximum.

4.6.22 Vibration (series 2) (see 3.6.22). Mated connectors shall be test in accordance with method 2005 of MIL-STD-1344. The following details shall apply:

(a) Test condition number - IV.
(b) The temperatures and percentage of time at those temperatures are specified in table XXVI.
(c) All contacts shall be wired in series.
(d) An independent frequency scan shall be conducted on the adapter with a suitable dummy load, simulating the mass of the test sample, to determine that the mounting plate has no resonant condition in the test frequency range.

TABLE XXVI. Vibration duration and temperature requirement (series 2).

Class	Duration	Standard temperature	Duration	Low temperature	Duration	High temperature
H,L,N	50%	15°C to 35°C (59°F to 95°F)	25%	-55°C ± 3° (-67°F)	25%	200°C ± 3° (392°F)

4.6.23 Shock (specified pulse) (series 1) (see 3.6.23). Mated, wired connectors shall be tested in accordance with method 2004 of MIL-STD-1344. The following details shall apply:

(a) Test condition letter - A.
(b) One shock in each direction of the three major axes.
(c) All contacts shall be wired in series with 100 ± 10 milliamperes of current flowing through the contacts during the test.
(d) Discontinuity shall be 10 microseconds maximum.

4.6.24 Shock (specified pulse) (series 2) (see 3.6.24). Mated, wired connectors shall be tested in accordance with method 2004 of MIL-STD-1344. The following details shall apply:

(a) Test condition letter - C, except the gravity units shall be 150.
(b) One shock in each direction of the three major axes.
(c) All contacts shall be wired in series with 100 ± 10 milliamperes of current flowing through the contacts during the test.
(d) Discontinuity shall be 1 microsecond maximum.

Source: https://assist.dla.mil -- Downloaded: 2016-11-16T06:23Z
Check the source to verify that this is the current version before use.

4.6.25 Humidity (series 1) (see 3.6.25)

4.6.25.1 Crimp contact connectors. Mated and unmated connectors shall be tested in accordance with method 1002.2 of MIL-STD-1344. The following details shall apply.

(a) 100 volt dc polarization voltage during steps 1 through 6 applied between alternate contacts connected together electrically and the remaining contacts and metal connector shell connected together electrically. Polarity of the metal shell shall be negative.
(b) Mated and unmated test samples.
(c) Type II, temperature cycling test.
(d) The insulated conductors used for measurements of insulation resistance shall have an insulation resistance greater than 100 kilohms.
(e) After a minimum of 3 hours at step 7 of the tenth cycle, insulation resistance shall be measured while connectors are subjected to high humidity conditions. Following the tenth cycle measurements, the connectors shall be maintained at a temperature of 25°C ±2°C and 50 percent relative humidity for 24 hours. Insulation resistance shall again be measured while at this environment

4.6.25.2 Solder contact connectors. Mated solder contact connectors shall be subjected to the following test. The test chamber shall consist of a box approximately 12 inches deep by 16 inches wide by 24 inches long, capable of being sealed, and shall be constructed of materials that will not, in the presence of water, affect deterioration of the samples. A suitable open screen tray shall be provided to support the test specimens approximately 8 inches below the top of the box. Provisions shall be made to bring out wires for measurement purposes through vaportight seals near the top of the box. Suitable controls shall be provided that will cause the chamber air temperature to vary 5°C (9°F) once each hour for 20 days, from any temperature between 22° and 28°C (72°F and 82°F), causing heavy condensation to form on the samples once each hour. The bottom of the test chamber shall be covered with approximately 1/4 inch of tap water to start the test The heat application to supply the temperature variation shall be radiant in nature and shall be applied to the underside of the test chamber.

4.6.26 Humidity (series 2) (see 3.6.26). Wired connectors shall be tested in accordance with method 1002 of MIL-STD-1344 The following details shall apply

(a) Test procedure (b)
(b) The test sample shall be mounted horizontally with the wires descending into the backshell.
(c) Wires shall be brought out of the chamber through vaportight seals
(d) There shall be no wire splices in the chamber.
(e) Connectors without rear seal grommets (classes H and N) shall have their rear terminals suitably protected.
(f) After completion of step 6 of the final cycle, insulation resistance shall be measured while the connectors are subjected to the high humidity condition.

4.6.27 Fluid immersion (series 1) (see 3.6.27). Unmated connectors shall be immersed fully in the fluids specified below for the required periods. At least one connector shall be immersed in each fluid. After removal from the fluid, each connector shall remain for 1 hour in free air at room conditions. Subsequent testing shall be performed on connectors mated with mating connectors that had been immersed simultaneously.

(a) Hydraulic fluid conforming to MIL-H-5606 - 20 hours.
(b) Lubricating oil conforming to MIL-L-7808 - 20 hours.

4.6.28 Fluid immersion (series 2) (see 3.6.28).

4.6.28.1 Classes H, L and N (see 3.6.28.1). At least one connector of each class shall be subjected to each of the tests of table XXVII. After testing in accordance with the individual test procedure, the connectors shall be visually (no magnification) inspected for cracks and tears and shall be mated by hand.

Source: https://assist.dla.mil -- Downloaded: 2016-11-16T06:23Z
Check the source to verify that this is the current version before use.

TABLE XXVII. Test fluids (series 2, classes H, L, and N).

Test no.	Test fluid	Test procedure
1	MIL-L-7808	Immerse unmated connectors in fluid at 120° ±3°C for 5 minutes. Remove connectors and allow to drain for 1 hour at room temperature. Fluid shall be drained from all recesses. Mate connectors and expose to 125° ±3°C in an air circulating oven for 6 hours. Remove connectors and allow to stabilize at room temperature for 1 hour minimum. Repeat procedure for a total of seven cycles.
2	MIL-L-23699	Identical procedure to sample 1.
3	MIL-H-5606	Immerse unmated connectors in fluid at 85° ±3°C for 5 minutes. Remove connectors and allow to drain for a minimum of 1 hour at room temperature. Fluid shall be drained from all recesses. Mate connectors and expose to 100° ±3°C in an air circulating oven for 6 hours. Remove connectors and allow to stabilize at room temperature for a minimum of 1 hour. Repeat procedure for a total of seven cycles.
4	Hydraulic fluid 1/	Identical procedure to sample 3.
5	MIL-A-8243 (or ethelyne glycol)	Immerse mated connectors in fluid at 65° ±3°C for 5 minutes. Remove connectors and allow to drain for 1 hour minimum at room temperature. Fluid shall be drained from all recesses. Unmate and expose connectors to 100° ±3°C in an air circulating oven for 6 hours. Remove connectors and allow to stabilize at room temperature for a minimum of 1 hour. Repeat procedure for a total of seven cycles.
6	MIL-C-25769 (diluted for cleaning)	Identical procedure to sample 5.
7	MIL-T-5624 (grade JP-5)	Immerse unmated connectors in fluid at room temperature for 5 minutes. Remove connectors and allow to drain for 1 hour at room temperature. Fluid shall be drained from all recesses. Mate connectors and expose to 55° ±3°C in an air circulating oven for 6 hours. Remove connectors and allow to stabilize at room temperature for a minimum of 1 hour. Repeat procedure for a total of seven cycles.
8	Coolant-dielectric fluid synthetic silicate ester base 2/	Unmated connectors shall be preconditioned at 175 C°for 30 minutes. Immerse connectors fully in room temperature fluid for 1 minute. Remove connectors and allow to stabilize at room temperature for a minimum of 1 hour. Fluid shall be drained from all recesses.
9	MIL-G-3056 (type 1) (or equivalent gasoline)	The wired assembled unmated connectors shall be immersed in the fluid at 25° ±3°C for a minimum of 5 minutes, removed from the fluid and exposed to free air for 24 ± 2 hours. This conditioning cycle shall be repeated until the connector has been subjected to 5 complete cycles; for a maximum of one cycle, the exposure to free air may be extended to 75 hours.
10	Solvent (a) specified in method 215 of MIL-STD-202	Identical procedure to sample 9.
11	Solvent (b) specified in method 215 of MIL-STD-202	Identical procedure to sample 9.
12	Solvent (c) specified in method 215 of MIL-STD-202	Identical procedure to sample 9.

1/ M2-V Chevron oil or equivalent.
2/ Coolanol 25 or equivalent.

Source: https://assist.dla.mil -- Downloaded: 2016-11-16T06:23Z
Check the source to verify that this is the current version before use.

4.6.28.2 Retention system fluid immersion (series 2, classes L and N) (see 3.6.28.2). Connectors shall be unmated and contacts shall be removed. Connectors shall be immersed in the following fluids (one sample per fluid) for 20 hours at room temperature.

Sample number	Test fluid
1	MIL-T-5624 (grade JP-5)
2	Coolanol 25 or equivalent
3	MIL-H-5606
4	MIL-L-7808
5	MIL-L-23699
6	Methyl alcohol
7	Isopropyl alcohol

After removal, excess fluid shall be allowed to drain from the connectors for 4 hours and the contacts shall be reinstalled. The connectors shall then be subjected to the subsequent tests specified in table XXI.

4.6.29 Insert retention (series 1) (see 3.6.29). Connectors, less insert removable grommets or insert supporting accessories, shall be tested in accordance with method 2010 of MIL-STD-1344.

4.6.30 Insert retention (series 2, class L) (see 3.6.30). Unmated, wired connectors, with backshells removed, shall be tested in accordance with method 2010 of MIL-STD-1344. The following details shall apply:

(a) Samples shall be divided into two equal groups and designated A and B. Group A shall have an axial load applied to the mating face and group B shall have an axial load applied to the rear face.

4.6.30.1 Insert retention (series 2, classes H and N) (see 3.6.30.1). Unmated receptacles shall be tested in accordance with method 1006 of MIL-STD-1344. The following details shall apply:

(a) Pressure to be applied shall be 100 lb_f/in^2 ± 1 percent.
(b) Pressure shall be applied to the mating face and then to the rear face.

4.6.31 Gage location and retention (crimp type contacts) (see 3.6.31). Applicable test gages shall be installed in 3 randomly selected cavities of each connector. Accessory rear hardware shall be removed, and remaining cavities shall have contacts in place. With the test gages fully seated back against the contact retention device, the axial location of the front end of the gages shall be measured relative to the reference point indication in figure 3. The axial load specified in table XI shall then be applied to individual test gages in both directions. The load shall be applied at a rate of approximately 1 pound per second until the specified load has been reached. Gage displacement shall be measured with respect to the connector shell after an initial load of 2 pounds has been applied to assure that all slack between the gage and the retention device has been removed. For group B inspection, gage displacement measurements are not required, and remaining contact cavities may be empty.

Source: https://assist.dla.mil -- Downloaded: 2016-11-16T06:23Z
Check the source to verify that this is the current version before use.

4.6.32 Contact retention (see 3.6.32). Connectors shall be tested in accordance with method 2007 of MIL-STD-1344. Axial loads shall be in accordance with table XI. The following details shall apply:

(a) Number of samples - The test shall be performed on 20 percent of the contact complement; but not less than three contacts in each connector half.
(b) Applied axial load - Preload to 3 pounds maximum. Apply load as specified in table XI.
(c) Special requirements - Where the test sequence requires maintenance aging prior to contact retention, the contacts which were subjected to maintenance aging shall also be selected for contact retention.
(d) Axial direction - The applicable forces shall be applied along the longitudinal axes of individual contacts in the direction tending to displace the contacts to the rear.
(e) Only the contacts to be tested need be installed in the connector.

4.6.32.1 Solder type and class N. Contact displacement shall be measured after the axial load has been removed. For class N connectors, the test shall apply to the pin contact members only.

4.6.32.2 Crimp types. Contact displacement shall be measured with the contact under load, after the load has been applied for a minimum of 5 seconds. Retention of the crimp terminals of class N connectors shall be similarly tested.

4.6.33 Contact engaging and separating forces (series 1) (see 3.6.33). Socket contacts shall be tested in accordance with the contact engagement and separation test of MIL-C-23216. Solder contacts may be tested installed in the connectors.

4.6.34 Probe damage (series 1) (see 3.6.34). Socket contacts shall be tested in accordance with method 2006 of MIL-STD-1344. The following detail shall apply.

(a) Probe depth shall be 1/2, 3/4, and full.

4.6.35 Cover chain, tensile strength (series 1) (see 3.6.35). The protective cover shall be securely held and a tensile static load of 25 pounds shall be applied to the end of the chain for 5 minutes in each direction as specified.

(a) With the axis of the chain at right angles to the axis of the holding fastener.
(b) With the axis of the chain in the same axis as that of the fastener.

4.6.36 Altitude immersion (series 2) (see 3.6.36). Mated, wired connectors shall be tested in accordance with method 1004 of MIL-STD-1344. The following details shall apply:

(a) Dielectric withstanding voltage and insulation resistance shall be measured as specified in 4.6.10 and 4.6.8 after the third cycle with the connectors still submerged in the solution.

4.6.37 Temperature life (series 2, class H) (see 3.6.37). Mated, wired connectors shall be tested in accordance with method 1005 of MIL-STD-1344. The following details shall apply:

(a) Temperature test condition - 6, except contacts shall not carry current.
(b) Test time condition - D.
(c) Contact resistance shall be measured in accordance with 4.6.6 at the conclusion of exposure.

Source: https://assist.dla.mil -- Downloaded: 2016-11-16T06:23Z
Check the source to verify that this is the current version before use.

4.6.37.1 Temperature life with contact loading (series 2, classes L and N) (see 3.6.37.1). Connectors with removable contacts shall have one mating pair of contacts removed and replaced with contacts crimped to steel core copper wire (copperweld or equivalent) of the appropriate size. The axial location of these contacts shall be measured for conformance with the applicable dimensions shown in figure 3 and a load of 2 pounds applied to seat the contact back against the retention device. The connector shall then be mounted in a fixture as shown in figure 12. A weight equal to 50 percent of the axial load specified in table XI for the applicable contact size shall be suspended freely from each steel core wire. A current of 100 ±10 milliamperes supplied from a 10.0 Vdc maximum power source shall be applied to the test contacts and a suitable instrument shall be used to monitor the circuit for discontinuity in excess of one microsecond. The connector mounted as shown in figure 11 shall then be subjected to the temperature life test of 4.6.37. After the connectors return to ambient temperature, they shall be unmated and the contact locations remeasured (figure 3) with 2 pounds axial load applied to seat the contact back against the retention device. The tested contacts shall then be replaced with unwired contacts and sealing plugs, and those cavities shall be exempted from subsequent testing.

4.6.38 Ozone exposure (series 2) (see 3.6.38). Unmated, wired connectors shall be tested in accordance with method 1007 of MIL-STD-1344.

4.6.39 Shell conductivity (series 2, except class A) (see 3.6.39). The dc resistance of the wired, mated, assembled connectors shall be measured from a point on the rear accessory thread of the plug to the mounting flange of the receptacle, or the rear thread of a cable connecting receptacle. The point of measurement on the square flange receptacle shall be adjacent to the mounting holes and adjacent to the "O" ring on the front or mounting side of the flange for the single hole mount receptacle. The dc resistance shall not exceed the values specified in 3.6.39 when measured by the voltmeter-ammeter method. The applied potential shall be 1-1/2 Vdc maximum A resistance shall be inserted in the circuit to limit the current to .100 ±.010 ampere. Probes with spherical ends of .05 inch minimum radius shall be used to make the voltage measurements on the connectors. The probes shall not puncture or otherwise damage the connector finish.

4.6.40 Insert grommet bonding (series 2, class L) (see 3.6.40). The insert assemblies shall be placed in a circulating air oven for a minimum period of 100 hours. The ambient temperature of the air circulating past the assemblies shall be 200 $^{+3}_{-0}$°C. At the end of this conditioning period the bonded assemblies shall be cooled to room temperature and the resilient grommets and interfacial seal shall be pulled or torn from the hard dielectric disk. The assemblies shall meet the requirements of 3.6.40.

4.6.41 External bending moment (series 2, class L) (see 3.6.41). The receptacle connector shall be mounted as in normal service to a rigid panel. Before mating the plug connector to the receptacle, an adapter or test torque arm shall be attached as shown on figure 7. After mating the plug and receptacle connectors, the distance "L" from the point of load application "P", to the mounting panel shall be determined. The load to be applied at point "P" shall then be determined as the bending moment listed in table XIII divided by the level arm "L". This load shall be applied at a rate of approximately 10 pounds per second until the required load is achieved. The load so applied shall be held for a period of 1 minute after which the load shall be released Continuity of the contacts shall be monitored during the test. The test circuit used to monitor this test shall be capable of detecting any discontinuity of 1 microsecond or greater.

Source: https://assist.dla.mil -- Downloaded: 2016-11-16T06:23Z
Check the source to verify that this is the current version before use.

4.6.42 Pin contact stability (series 2, class L) (see 3.6.42). The unmated connectors shall have 10 percent (but not less than one) of their pin contacts subjected to this test. Gage pins shall be used to measure displacement. The gage pins shall conform to MS3461. The connector shall be held in a holding device. A force of three pounds shall be applied to the exposed rod as shown on figure 8. The rate of load application shall not exceed one inch per minute. The total pin tip displacement shall be measured as shown on figure 8.

4.6.43 RFI shielding (series 2, RFI plugs only, except class A) (see 3.6.43). The RFI shielding effectiveness of mated connectors with RFI backshells shall be measured in a triaxial radio frequency leakage fixture. The RFI leakage from the conductor inside the connector in the inner coaxial line into the outer coaxial line shall be measured at the frequencies specified in table XV within a frequency accuracy of ±5 percent. The level of detected signal power shall be indicated by a tunable radio frequency field intensity meter isolated from the test circuit by a 10 dB pad. Care shall be taken to ensure that the signal is a result of RFI leakage from within the mated connector and not due to a faulty termination inside the fixture. All terminations inside the fixture, whether to the RFI backshells or between internal conductors, shall have a leakage at least 10 dB less than the test requirement. The test arrangement shall be as shown in figures 9 and 10. The signal source shall be set to the desired frequency. The signal shall be fed through a 10 dB isolation pad to a parallel circuit consisting of a coaxial switch (DPDT) so connected that the signal can be manually or electronically fed alternately to the fixture and to a variable 100 dB reference attenuator. The attenuator shall be adjustable in 1 dB steps and calibrated to ±3 dB.

(a) The inserts may be removed from the connectors under test or the contacts removed and a hole drilled through the inserts to accommodate a center conductor of suitable geometry to provide a good 50 ohm impedance match with the ID of the mated connector shells and RFI backshells. Tapered transitions may be used to provide a means of changing diameters without introducing significant discontinuities in the line. The maximum VSWR in the inner coaxial line shall be 1.5. The outer shell of the test fixture shall be so constructed as to provide a good 50 ohm impedance match with the OD of the mated connector shells, coupling ring and RFI backshells. The maximum VSWR of the outer coaxial line shall be 1.5.

(b) A sliding circumferential short shall be positioned behind the connector on the signal input end of the fixture to provide for tuning the outer coaxial line for maximum output at each test frequency. The allowable travel of this short shall be greater than 1/2 wave length at the lowest test frequency or 1.5 meters minimum for 100 MHz. The inner coaxial line shall be terminated in a fixed 50 ohm load impedance behind the connector at the output end of the fixture.

(c) The connectors used to couple together the various elements of the test system shall be of a low leakage type which have a nominal impedance of 50 ohms, a VSWR of less than 1.5, and a minimum leakage attenuation of 100 dB. The output impedance of the signal source and the input impedance of the detector shall be nominally 50 ohms with a maximum VSWR of 1.5. The input and output VSWR of the standard attenuator shall be less than 1.5 in the 20 to 100 dB range.

(d) The relative signal level in the variable attenuator shall be equaled to that through the leakage fixture by adjusting the attenuator. The signal loss in the fixture can then be read from the setting on the variable attenuator.

4.6.44 RFI finger spring force (series 2, class L, except class A) (see 3.6.44). RFI plugs shall be completely mated and unmated with counterpart receptacles less bayonet pins and inserts. On the initial mating and unmating the axial forces necessary to engage and separate shall be within the values listed in table XVI.

Source: https://assist.dla.mil -- Downloaded: 2016-11-16T06:23Z
Check the source to verify that this is the current version before use.

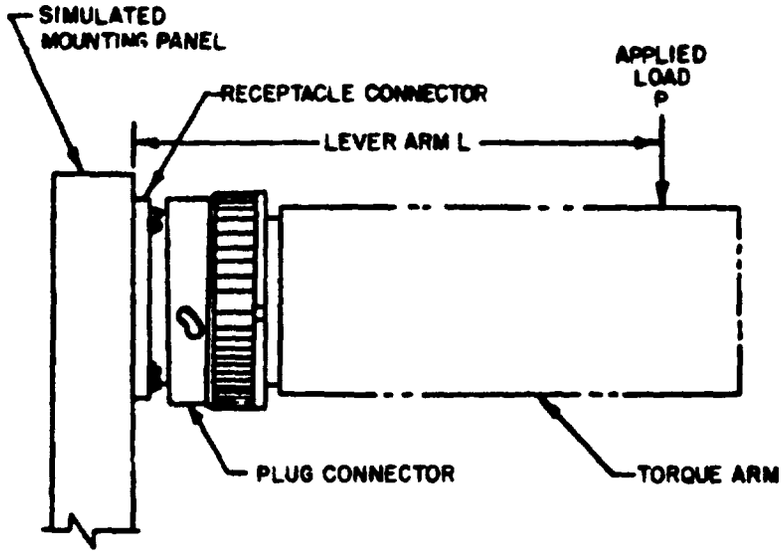

FIGURE 7. External bending moment test setup.

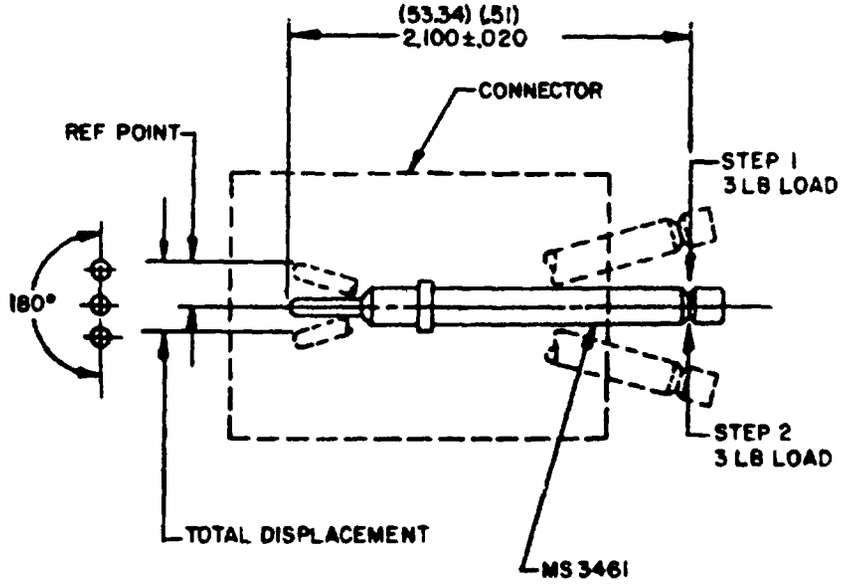

Step 1 - Apply load to determine reference point.
Step 2 - Apply load in opposite direction (180°) and measure total deflection.

FIGURE 8. Pin contact stability test.

Source: https://assist.dla.mil -- Downloaded: 2016-11-16T06:23Z
Check the source to verify that this is the current version before use.

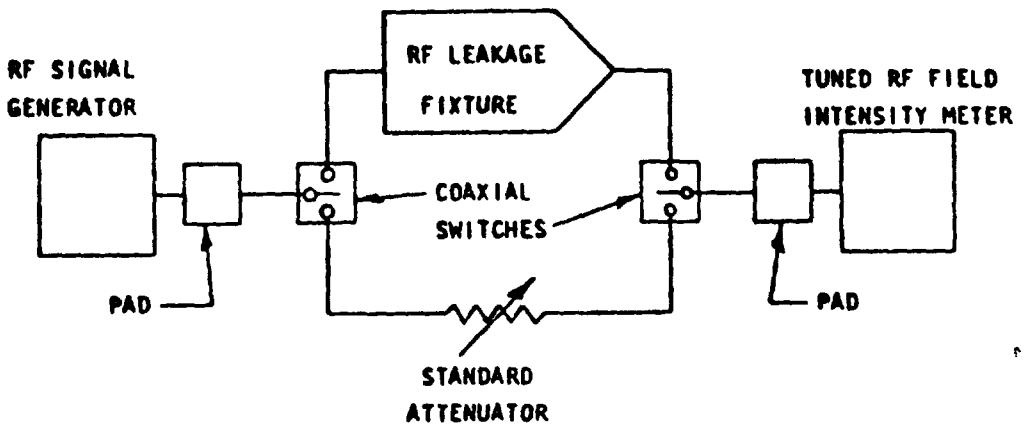

FIGURE 9. Test system for RFI leakage test.

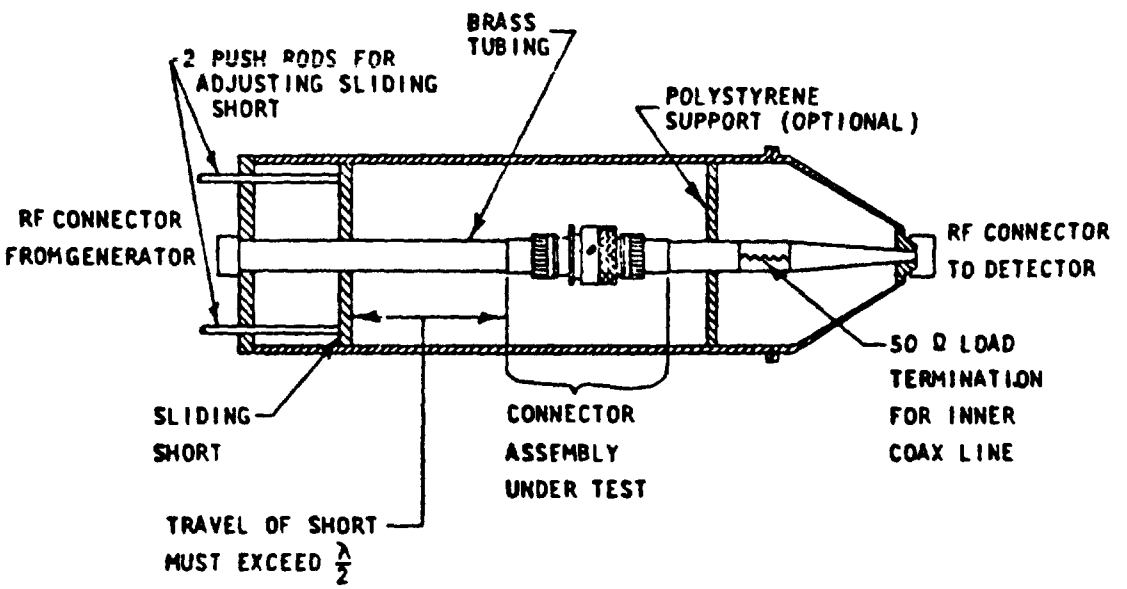

FIGURE 10. RFI leakage test fixture.

Source: https://assist.dla.mil -- Downloaded: 2016-11-16T06:23Z
Check the source to verify that this is the current version before use.

4.6.45 Insertion removal tool abuse (series 2, classes L and N) (see 3.6.45). Steps (a), (b), (c), and (d) shall be performed. Separate groups of 5 contact cavities each shall be used for each step.

(a) Removal tool - The tool shall be inserted as if to remove a contact and a total of 3 pounds axial load shall be applied. With the force applied, the tool shall be rotated 180° and then removed, also removing the contact. The contact shall be reinserted. These steps shall be repeated three times on each of the five contacts selected.

(b) Insertion tool - The contact shall first be removed. With the insertion end of the tool, insert the contact and continue to press until an axial load of 3 pounds is applied. With the force applied, the tool shall be rotated 180° and then removed. These steps shall be repeated three times on each of the five contacts selected.

(c) Insertion tool - The contact shall first be removed. With the insertion end of the tool, the contact shall be inserted and an axial load of 10 pounds applied to the tool. These steps shall be performed only once on each of the five contacts selected. A new tool shall be used for each contact.

(d) Removal tool - The tool shall be inserted as if to remove a contact and a total of 10 pounds axial load shall be applied. The tool shall then be removed, also removing the contact. These steps shall be performed only once on each of the five contacts selected. A new tool shall be used for each contact.

NOTE: Should a tool become damaged during any of the testing, it shall be replaced. Failure of a tool shall not constitute a test failure.

4.6.46 Contact walk-out (series 2, classes L and N) (see 3.6.46). Two contacts in each plug and receptacle shall be tested. The contacts shall be crimped to stranded steel cable of an appropriate size and installed in the connector. The unmated connector shall be mounted in a test fixture as shown in figure 12. A 3 pound load shall be applied to the cable. One 360° rotation of the fixture with the connector mounted shall constitute one cycle. The connector shall be subjected to 100 cycles at a rate of 10 to 20 cycles per minute.

4.6.47 Accessory thread strength (series 2, class L) (see 3.6.47). The mated connector shall be mounted as in normal service to a rigid panel. The torque wrench shall be attached as shown in figure 13. After mating the plug and receptacle connectors, a torque shall be applied to the accessory end of the plug at a rate of approximately 10 pounds per second until the required torque is achieved (table XXVIII). The load so applied shall be held for a period of 1 minute after which the load shall be released. The test shall be repeated on the accessory end of the receptacle. The connectors shall then be unmated and inspected to 3X magnification for damage or breakage.

TABLE XXVIII. Accessory thread strength.

Shell size	Minimum torque
	in/lb
8	75
10	100
12	140
14	150
16	150
18	150
20	175
22	175
24	175

Source: https://assist.dla.mil -- Downloaded: 2016-11-16T06:23Z
Check the source to verify that this is the current version before use.

4.6.48 Magnetic permeability (see 3.3.3). The wired, assembled, and fully mated connectors shall be measured for relative permeability with an indicator conforming to MIL-I-17214.

4.6.49 Final examination of product. The marking on connectors and accessories shall be legible after all tests specified in tables XVIII, XIX, XX, and XXI.

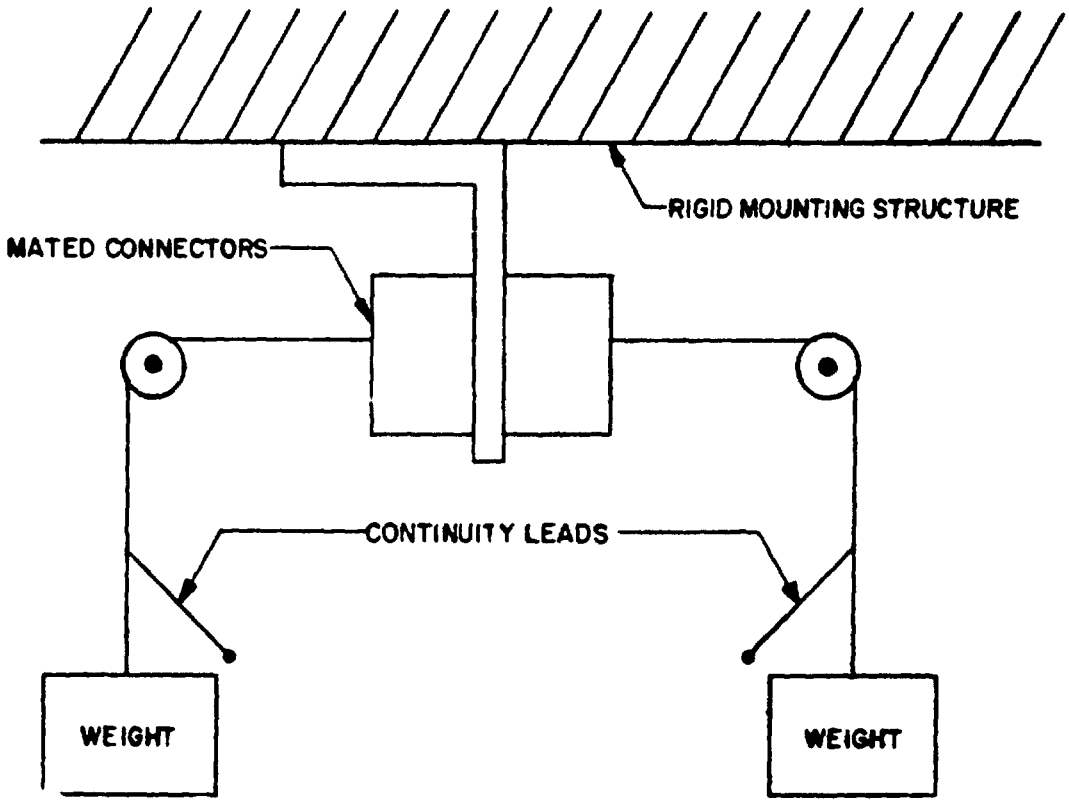

FIGURE 11. Temperature life with contact retention.

Source: https://assist.dla.mil -- Downloaded: 2016-11-16T06:23Z
Check the source to verify that this is the current version before use.

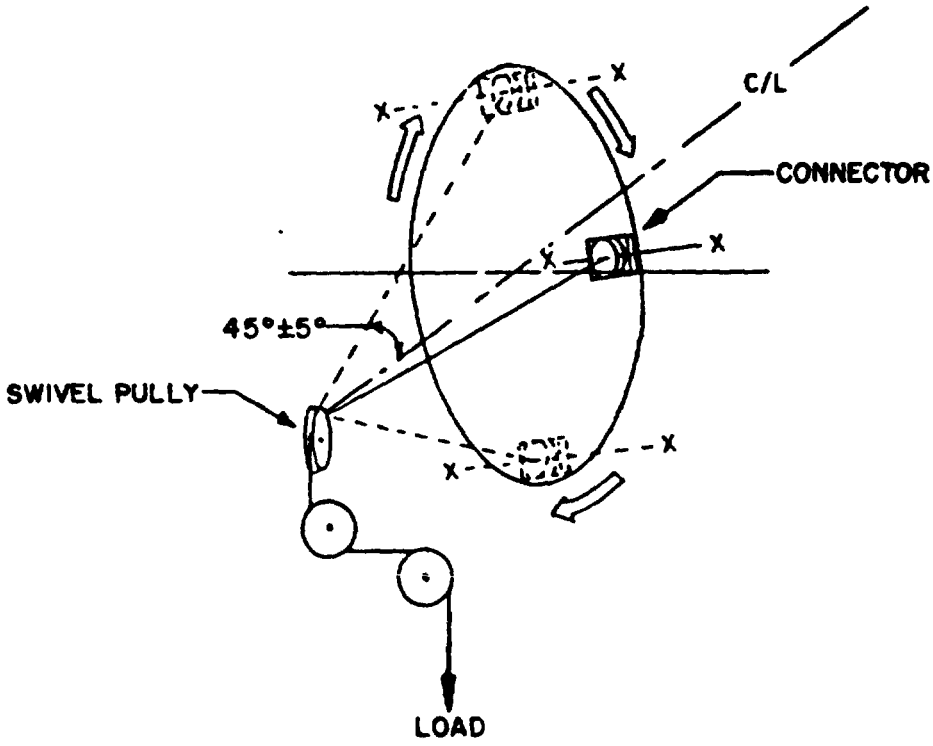

NOTE: Connector axis (ref X-X) to remain constant during rotation

FIGURE 12. Contact walk-out.

Source: https://assist.dla.mil -- Downloaded: 2016-11-16T06:23Z
Check the source to verify that this is the current version before use.

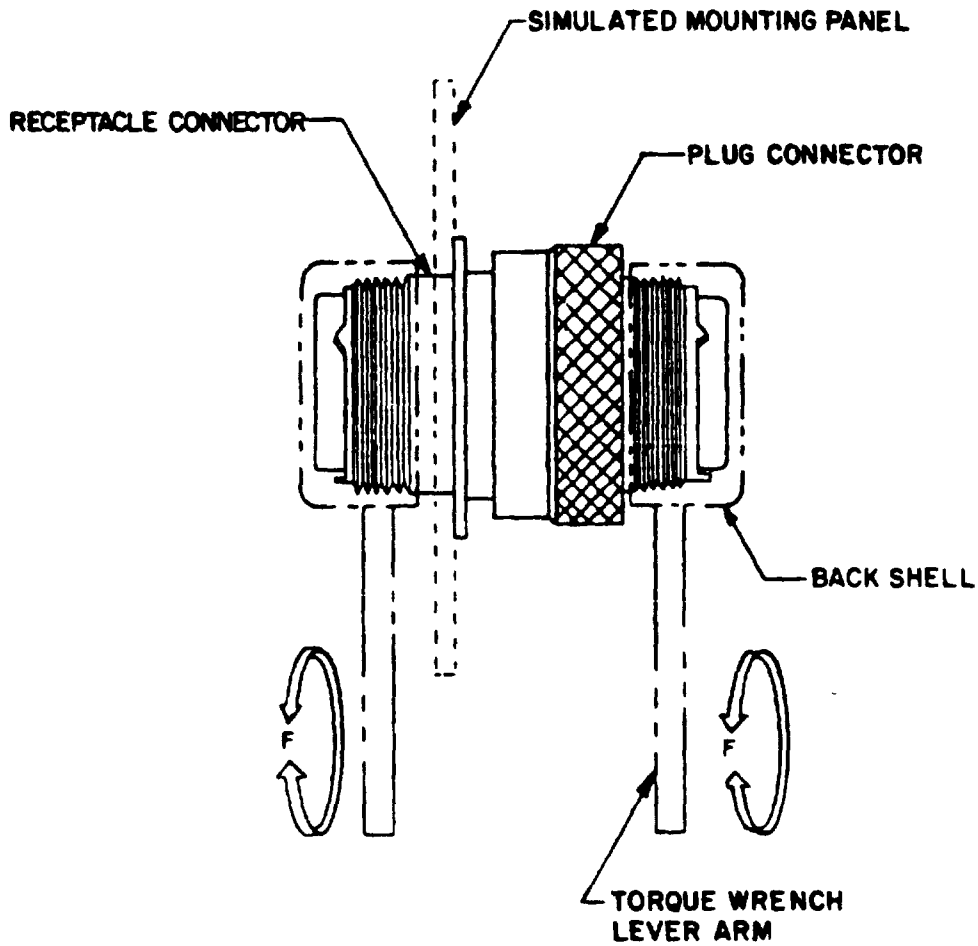

FIGURE 13 Rear accessory thread torque test setup.

Source: https://assist.dla.mil -- Downloaded: 2016-11-16T06:23Z
Check the source to verify that this is the current version before use.

5 PREPARATION FOR DELIVERY

5.1 Preparation for delivery shall be in accordance with MIL-C-55330.

5.1.1 Connectors. A plastic cap, in accordance with MS90376, shall be put on each connector. For RFI connectors, dust caps must be assembled externally over the coupling ring.

6. NOTES

6.1 Intended use (series 1). The various classes and types of connectors are intended for application as follows

(a) Classes E, F, J, and P connectors are intended for use in environment-resisting applications where the operating temperature range of -55° to 125°C is experienced. Crimp contact connectors have the additional advantage of possessing removable crimp-type contacts. Class J connectors are intended for use with light-weight, single-jacketed cable.
(b) Class H receptacles are intended for use in applications wherein pressures must be contained by the connectors across the walls or panels on which they are mounted.
(c) Crimp contact connectors should have contacts installed in all positions when the connector is wired. Sealing plugs should be installed in the grommet holes when no wire is attached to the contact in grommet sealed connectors
(d) The potting form should remain with the connector after potting.
(e) Counterpart solder and crimp contact connectors are intended to be intermateable. Moisture resistance capability is then reduced to that of the solder contact connector
(f) If air leakage requirements are critical, a resilient insert, solder contact receptacle, a through-bulkhead receptacle, or class H receptacle should be used, or the connector should be potted.
(g) For finished wire diameters less than specified in table II, shrink-fit sleeving should be used over the wire.
(h) Where two or more wires are used in a solder cup or wire barrel, grommet sealing is not obtainable Wires should be potted if sealing is required

6.2 Intended use (series 2).

(a) Connector backshells must be installed to meet the specified moisture sealing requirements.
(b) Class A connectors are intended for use in application where 200°C temperature, grommet seal, and nonconductive finish are required.
(c) Class L connectors are intended for use in environment resisting applications at 200°C temperature and are fluid resistant. These connectors have wire sealing grommets.
(d) Class H and N receptacles are intended for use in applications wherein pressure must be contained by the connectors across walls or panels on which they are mounted They have fluid resistant insert face seals. In addition, class N receptacles have crimp type terminations.
(e) Mechanical strain reliefs are intended for use where a saddle type clamp is desired
(f) Shielded contacts are intended for use with shielded and jacketed single conductor cables, and may be used with certain coaxial cables when impedance matching is not required. Shielded contacts are not furnished. with connectors, and must be ordered separately when required. Shielded contacts will not intermate with standard size 12 contacts or with series 1 shielded contacts. It is the user's responsibility to assure mating contact compatibility at time of contact installation.
(g) RFI backshell and grounding fingers on plug are available in class L and provide RFI shielding

Source: https://assist.dla.mil -- Downloaded: 2016-11-16T06:23Z
Check the source to verify that this is the current version before use.

6.3 Ordering data. Procurement documents should specify:

(a) Title, number, and date of this specification.
(b) Title, number, and date of the applicable MS standard and the complete part number.
(c) For indirect shipment, these connectors may be furnished without contacts, grommet sealing plugs or insertion and removal tools (see 3.4.1, 3.4.1.2.3, 3.4.1.4.3, and 3.4.5.7).
(d) Special finish.
(e) Shielded contacts.

6.3.1 Accessory hardware. Accessory hardware, such as dust covers or mounting hardware especially designed for these connectors, is shown on the separate drawings.

6.3.2 Crimp contacts. Crimp contacts may be ordered in bulk in accordance with MIL-C-23216 or MIL-C-39029, as applicable.

6.4 Definitions (see MIL-STD-1353).

6.4.1 Alternate insert position. The insert position illustrated in MIL-STD-1669 should be termed "normal" position. Where possible, the order of design selection of insert position should be "normal" first. This should be followed by the alternate positions as needed in the order in which they are presented in the tabulation included in the detail document covering the arrangement.

6.4.2 Backshell. The backshell consists of an accessory nut and follower. The accessory nut is captivated to the follower and is used to attach the backshell to the connector (except the RFI backshell).

6.5 Qualification. With respect to products requiring qualification, awards will be made only for products which are at the time set for opening of bids, qualified for inclusion in the applicable Qualified Products List whether or not such products have actually been so listed by that date. The attention of the suppliers is called to this requirement, and manufacturers are urged to arrange to have the products that they propose to offer to the Federal Government, tested for qualification in order that they may be eligible to be awarded contracts or orders for the products covered by this specification.

6.5.1 Application for qualification. The activity responsible for the Qualified Products List (QPL) for MIL-C-26482 is the Naval Air Systems Command. The Naval Weapons Support Center, Crane, IN has been designated by the Naval Air Systems Command as agent for the establishment of the QPL. Requests for information pertaining to and applications for qualification should be addressed to:

Commanding Officer
Naval Weapons Support Center
Crane, IN 47522
ATTN. Code 3074

Source: https://assist.dla.mil -- Downloaded: 2016-11-16T06:23Z
Check the source to verify that this is the current version before use.

6.6 Application information. The information shown on figure 14 is for guidance in design and application. The flashover voltages shown on figure 14 do not include corona or any safety factor.

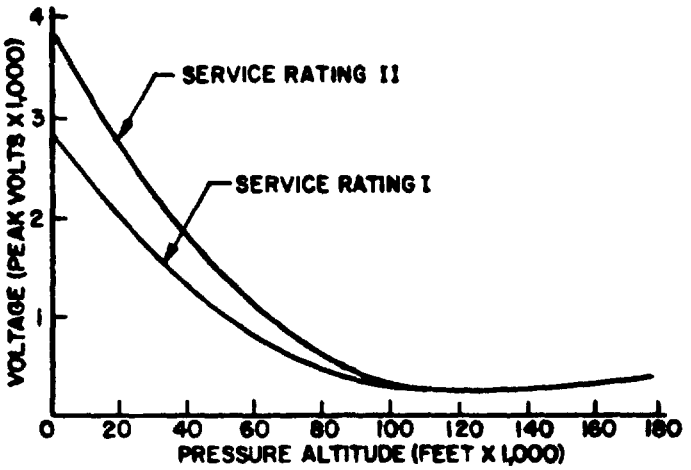

FIGURE 14 Typical flashover voltage vs altitude on unmated miniature connectors (see 6.6)

6.7 Intermetallic contact. The finishing of metallic areas to be placed in intimate contact by assembly presents a special problem, since intermetallic contact of dissimilar metals results in electrolytic couples which promote corrosion through galvanic action. To provide the required corrosion protection, intermetallic couples are restricted to those permitted by table XXIX. Table XXIX shows metals and alloys (or plates) by groups which have common electromotive forces (EMF) within 0.05 volt when coupled with a saturated calomel electrode in sea-water at room ambient temperatures. All members of a group are considered as completely compatible, one with the other Compatible couples between groups have been specified in table XXIX based on a potential difference of 0.25 volt maximum To simplify any arithmetic involved, table XXIX shows, in addition to EMF against a calomel electrode, a derived "anodic index" with group 1 (gold, etc) as 0 and group 18 (magnesium, etc) as 175. Subtraction of a lower group anodic index gives the EMF difference in hundredths of a volt.

6.7.1 Groups. Table XXIX sets up 18 primary groups. It may be noted that neither the metallurgical similarity or dissimilarity of metals is the parameter for selection of compatible couples. All members within a group, regardless of metallurgical similarity, are considered inherently nonsusceptible to galvanic action, when coupled with any member within the group; for example, such dissimilar metals as platinum and gold. Similarly, such basically dissimilar alloys as austenitic stainless steel, silver-solder, and low brass (all members of group 5) are inherently nonsusceptible when coupled together.

6.7.2 Compatibility graphs Permissible couple series are shown in table XXIX by the graphs at the right Members of groups connected by lines will form permissible couples. A "O" indicates the most cathodic member of each series, a "●" an anodic member, and the arrow indicates the anodic direction.

6.7.3 Selection of compatible couples Proper selection of metals in the design of equipment will result in fewer intermetallic contact problems. For example, for sheltered exposure, neither silver nor tin require protective finishes. However, since silver has an anodic index of 15 and tin 65, the EMF generated as a couple is 0.50 volt, which is not allowable by table XXIX. In this case, other metals or plates will be required It should be noted that, in intermetallic couples, the member with the higher anodic index is anodic to the member with the lower anodic index and will be susceptible to corrosion in the presence of an electrolytic medium. If the surface area of the

Source: https://assist.dla.mil -- Downloaded: 2016-11-16T06:23Z
Check the source to verify that this is the current version before use.

TABLE XXIX. Compatible couples (see 6.7).[1/]

Group No.	Metallurgical category	EMF (volt)	Anodic index (0.01 v)	Compatible couples
1	Gold, solid and plated, gold-platinum alloys; wrought platinum (most cathodic)	+0.15	0	○
2	Rhodium plated on silver-plated copper	+0.05	10	●○
3	Silver, solid or plated; high silver alloys	0	15	●●○
4	Nickel, solid or plated, monel metal, high nickel-copper alloys	-0.15	30	●●○
5	Copper, solid or plated, low brasses or bronzes; silver solder; German silver; high copper-nickel alloys; nickel-chromium alloys; austenitic corrosion-resistant steels	-0.20	35	●●●○
6	Commercial yellow brasses and bronzes	-0.25	40	●●●○
7	High brasses and bronzes; naval brass; Muntz metal	-0.30	45	●●●○
8	18 percent chromium type corrosion-resistant steels	-0.35	50	●●●●○
9	Chromium, plated; tin, plated; 12 percent chromium type corrosion-resistant steels	-0.45	60	●●●●○
10	Tin-plate, terneplate, tin-lead solder	-0.50	65	●●●●○
11	Lead, solid or plated, high lead alloys	-0.55	70	●●●●○
12	Aluminum, wrought alloys of the duralumin type	-0.60	75	●●●●○
13	Iron, wrought, gray, or malleable; plain carbon and low alloy steels, armco iron	-0.70	85	●●●●○
14	Aluminum, wrought alloys other than duralumin type; aluminum, case alloys of the silicon type	-0.75	90	●●●●○
15	Aluminum, cast alloys other than silicon type, cadmium, plated and chromated	-0.80	95	●●●●○
16	Hot-dip-zinc plate, galvanized steel	-1.05	120	●○
17	Zinc, wrought; zinc-base die-casting alloys; zinc, plated	-1.10	125	●
18	Magnesium and magnesium-base alloys, cast or wrought (most anodic)	-1.60	175	●

1/ Compatible couples - potential difference of 0.25 volt maximum between groups.

Source: https://assist.dla.mil -- Downloaded: 2016-11-16T06:23Z
Check the source to verify that this is the current version before use.

cathodic part is significantly greater than that of the anodic part, the corrosive attack on the contact area of the anodic part may be greatly intensified. Material selection for intermetallic contact parts, therefore, should establish the smaller part as the cathodic member of the couple, whenever practicable.

6.7.4 Plating. When base metals intended for intermetallic contact form couples not allowed by table XXIX, they are to be plated with those metals which will reduce the potential difference to that allowed by table XXIX.

6.8 Changes from previous issue. Asterisks are not used in this revision to identify changes with respect to the previous issue, due to the extensiveness of the changes.

6.9 Patent and copyright notice.

(a) The Government has a royalty-free license under U.S. Patents 2,563,712 and 2,984,811 owned by the Bendix Corporation and under pertinent patent applications owned by the Deutsch Company for the benefit of manufacturers of the items called for in this specification and related military standards either for the Government or for use in equipment to be delivered to the Government.

(b) Any portion of this specification and related military standards which may be covered by copyrights owned by the Bendix Corporation or the Deutsch Company are reprinted with the express permission of the said copyright owners

6.10 Dimensions. Dimensions are in inches.

6.11 Metric equivalents. Metric equivalents (to the nearest .01 mm) are given for general information only and are based upon 1 inch = 25.4 mm.

TABLE XXX. Cross reference.

MIL-C-83723 series I and MIL-C-26482 connectors cross reference table		
MIL-C-83723 specification sheet no.	Class	Superseded by
1	R	MS3470L
2	R	MS3470L
3	R	MS3472L
4	R	MS3472L
5	R	MS3474L
6	R	MS3474L
7	R	MS3471L
8	R	MS3471L
9	H	MS3440H
10	H	MS3440H
11	H	MS3443H
12	H	MS3443H
13	R	MS3476L
14	R	MS3476L
42	R	MS3475L
43	R	MS3475L

NOTE. Class R superseded by class L.

Source: https://assist.dla.mil -- Downloaded: 2016-11-16T06:23Z
Check the source to verify that this is the current version before use.

Custodians:
Army - EL
Navy - AS
Air Force - 85

Review activities:
Army - EL, MI, MU
Navy - EC, SH
Air Force - 11, 17
DSA - ES

User activities:
Army - AV
Navy -
Air Force -

Preparing activity:
Navy - AS

Agent:
DSA - ES

(Project 5935-1947)

Source: https://assist.dla.mil -- Downloaded: 2016-11-16T06:23Z
Check the source to verify that this is the current version before use.

INSTRUCTIONS: In a continuing effort to make our standardization documents better, the DoD provides this form for use in submitting comments and suggestions for improvements. All users of military standardization documents are invited to provide suggestions. This form may be detached, folded along the lines indicated, taped along the loose edge *(DO NOT STAPLE)*, and mailed. In block 5, be as specific as possible about particular problem areas such as wording which required interpretation, was too rigid, restrictive, loose, ambiguous, or was incompatible, and give proposed wording changes which would alleviate the problems. Enter in block 6 any remarks not related to a specific paragraph of the document. If block 7 is filled out, an acknowledgement will be mailed to you within 30 days to let you know that your comments were received and are being considered.

NOTE: This form may not be used to request copies of documents, nor to request waivers, deviations, or clarification of specification requirements on current contracts Comments submitted on this form do not constitute or imply authorization to waive any portion of the referenced document*(s)* or to amend contractual requirements.

(Fold along this line)

(Fold along this line)

DEPARTMENT OF THE NAVY

NO POSTAGE NECESSARY IF MAILED IN THE UNITED STATES

OFFICIAL BUSINESS
PENALTY FOR PRIVATE USE $300

BUSINESS REPLY MAIL
FIRST CLASS PERMIT NO 12503 WASHINGTON D C

POSTAGE WILL BE PAID BY THE DEPARTMENT OF THE NAVY

Commanding Officer
Naval Air Engineering Center
Engineering Specifications & Standards
Department (ESSD) Code 93
Lakehurst, NJ 08733

Source: https://assist.dla.mil -- Downloaded: 2016-11-16T06:23Z
Check the source to verify that this is the current version before use.

STANDARDIZATION DOCUMENT IMPROVEMENT PROPOSAL

(See Instructions – Reverse Side)

1. DOCUMENT NUMBER	2. DOCUMENT TITLE

3a. NAME OF SUBMITTING ORGANIZATION	4. TYPE OF ORGANIZATION *(Mark one)*
	☐ VENDOR
	☐ USER
b. ADDRESS *(Street, City, State, ZIP Code)*	☐ MANUFACTURER
	☐ OTHER *(Specify)* _____

5. PROBLEM AREAS

a. Paragraph Number and Wording

b. Recommended Wording

c. Reason/Rationale for Recommendation

6. REMARKS

7a. NAME OF SUBMITTER *(Last, First, MI)* – Optional	b. WORK TELEPHONE NUMBER *(Include Area Code)* – Optional
c. MAILING ADDRESS *(Street, City, State, ZIP Code)* – Optional	8. DATE OF SUBMISSION *(YYMMDD)*

(TO DETACH THIS FORM, CUT ALONG THIS LINE)

DD FORM 82 MAR 1426 PREVIOUS EDITION IS OBSOLETE.

Source: https://assist.dla.mil -- Downloaded: 2016-11-16T06:23Z
Check the source to verify that this is the current version before use.