INCH-POUND

MIL-STD-129M
15 JUNE 1993

SUPERSEDING
MIL-STD-129L
15 OCTOBER 1990

MILITARY STANDARD

MARKING FOR SHIPMENT AND STORAGE (PART 1 OF 4 PARTS)

AMSC N/A

AREA PACK

DISTRIBUTION STATEMENT A: Approved for public release; distribution is unlimited.

Source: https://assist.dla.mil -- Downloaded: 2016-10-21T11:29Z
Check the source to verify that this is the current version before use.

FOREWORD

1. This military standard is approved for use by all Departments and Agencies of the Department of Defense (DOD).

2. Beneficial comments (recommendations, additions, deletions) and any pertinent data which may be of use in improving this document should be addressed to: Chief, Logistics Support Activity Packaging, Storage, and Containerization Center, ATTN: AMXLS-TP-P, 11 Midway Road, Tobyhanna, PA 18466-5097, by using the self-addressed DD Form 1426 (Standardization Document Improvement Proposal) appearing at the end of this document or by letter.

Source: https://assist.dla.mil -- Downloaded: 2016-10-21T11:29Z
Check the source to verify that this is the current version before use.

CONTENTS

PARAGRAPH		PAGE
1.	SCOPE	1
1.1	Purpose	1
1.2	Applicability	1
1.2.1	Exceptions, exemptions, and additions	1
1.3	English-metric conversion	1
2.	APPLICABLE DOCUMENTS	4
2.1	Government documents	4
2.1.1	Specifications and standards	4
2.1.2	Other Government documents and publications	5
2.2	Non-Government publications	6
2.3	Order of precedence	7
3.	DEFINITIONS	8
3.1	Abbreviations and acronyms.	8
3.2	Assembly	10
3.3	Bar code	10
3.4	Cognizant activity	10
3.5	Commercial and Government Entity (CAGE) code	10
3.6	Consignee (receiver)	10
3.7	Consignor (shipper)	10
3.8	Consolidation container	11
3.9	Contract Line Item Number (CLIN)	11
3.10	Contract number or purchase order number	11
3.11	Date assembled	11
3.12	Date packed	11
3.13	Defense Transportation System (DTS)	11
3.14	Electrostatic Discharge (ESD) sensitive devices	11
3.15	Exterior container	11
3.16	Hardness critical item (HCI)	11
3.17	Hazardous materials	12
3.18	Human-readable interpretation (HRI)	12
3.19	Interior container	12
3.20	Intermediate container	12
3.21	Item description	12
3.22	Kit	12
3.23	Levels of protection	12
3.23.1	Levels of preservation	12
3.23.2	Levels of packing	12
3.24	Loose or unpacked item	13

Source: https://assist.dla.mil -- Downloaded: 2016-10-21T11:29Z
Check the source to verify that this is the current version before use.

CONTENTS

PARAGRAPH		PAGE
3.25	Lot, batch, or identification control number	13
3.26	Manufacturer	13
3.27	Military methods of preservation	13
3.28	Modification work order (MWO)	13
3.29	National/NATO stock number (NSN)	13
3.30	Packaging	13
3.31	Packing	13
3.32	Palletized unit load	13
3.33	Parcel post	13
3.34	Performance-oriented packaging (POP)	14
3.35	Polychlorinated biphenyl (PCB)	14
3.36	Port of debarkation (POD)	14
3.37	Port of embarkation (POE)	14
3.38	Preservation	14
3.39	Project code	14
3.40	Proper shipping name (PSN)	14
3.41	Protected cargo	14
3.41.1	Classified items	14
3.41.2	Controlled items	14
3.41.3	Pilferable items	14
3.41.4	Sensitive items	15
3.42	Quantity	15
3.43	Quantity per unit pack (QUP)	15
3.44	Radioactive material	15
3.45	Required delivery date (RDD)	15
3.46	Security assistance	15
3.47	Serial number	15
3.48	Set	15
3.49	Shelf-life	15
3.49.1	Assembled date	16
3.49.2	Cured date	16
3.49.3	Expiration date	16
3.49.4	Inspection or test date	16
3.49.5	Manufactured date	16
3.49.6	Packed date	16
3.50	Shelf-life code (SLC)	16
3.51	Shelf-life item	16
3.52	Shipping container	16
3.53	Stamping	16
3.54	Transportation Control Number (TCN)	16
3.55	Unitization	17
3.56	Unit of issue (UI)	17
3.56.1	Definitive unit of issue	17

Source: https://assist.dla.mil -- Downloaded: 2016-10-21T11:29Z
Check the source to verify that this is the current version before use.

CONTENTS

PARAGRAPH		PAGE
3.56.2	Nondefinitive unit of issue	17
3.56.3	Quantitative expression	17
3.57	Unit pack	17
3.58	Warranty markings	17
4.	GENERAL REQUIREMENTS	18
4.1	Abbreviations	18
4.2	Unit pack, intermediate container, and exterior container identification and contract data markings	18
4.2.1	Identification markings on unit packs, intermediate containers, and unpacked items	18
4.2.1.1	Placement of identification markings on unit packs, intermediate containers and unpacked items	20
4.2.2	Identification markings on exterior containers	20
4.2.2.1	Marking for assorted items	21
4.2.2.1.1	Related items	21
4.2.2.1.2	Unrelated items	22
4.2.2.2	Marking of gross weight and cube	22
4.2.2.3	Omission of markings on exterior shipping containers of protected cargo	23
4.2.2.4	Omission of markings on exterior shipping containers of items in the Defense Personnel Support Center (DPSC) Clothing and Textile (C&T) Directorate	23
4.2.3	Exterior container contract data markings	23
4.3	Address markings	24
4.3.1	Contractor- or vendor-originated address markings	24
4.3.2	Military address markings	26
4.3.2.1	Format of the DD Form 1387	27
4.3.2.2	Data to be bar coded on the DD Form 1387	31
4.3.2.2.1	Human-readable interpretation (HRI)	31
4.3.2.3	Size of the DD Form 1387	31
4.3.3	Affixing the contractor/vendor or military address label to the shipping container	32

Source: https://assist.dla.mil -- Downloaded: 2016-10-21T11:29Z
Check the source to verify that this is the current version before use.

CONTENTS

PARAGRAPH		PAGE
4.3.4	DOD shipments sent through the U.S. Postal Service	32
4.3.5	Direct mail pouch shipment	32
4.3.6	Full carload and full truckload shipments	32
4.3.7	Regional Freight Consolidation Center shipments	32
4.4	Placement of identification, contract data, and address markings on exterior shipping containers	32
4.4.1	Boxes and crates	33
4.4.2	Bales and cloth-covered bundles	34
4.4.3	Paper shipping sacks, bags, and textile/laminated textile bags	34
4.4.4	Barrels, drums, and other cylindrical containers	35
4.4.5	Miscellaneous articles and unpacked items such as spools, reels, rods, coils of wire and cable, and paper- and cloth-wrapped rolls	37
4.4.6	Unpacked major equipment (except unpacked vehicles)	38
4.4.7	Palletized unit load	38
4.4.8	Wood products	40
4.4.8.1	Bundled wood products	40
4.4.8.2	Unstrapped (loose) wood products	41
4.4.8.3	Miscellaneous wood products in containers	41
4.4.9	Unpacked vehicles	42
4.4.10	Commercial- or Government-owned (or -leased) shipping containers (SEAVANs) and military-owned demountable containers (MILVANs)	42
4.4.11	Tires, loose and unitized	43
4.4.12	Tubular products (loose)	43
4.4.13	Tubular products (bundles and lifts)	43
4.5	Bar code markings	44
4.5.1	Application of bar code markings on all containers, palletized loads, and loose or unpacked items	44
4.5.1.1	Information to be bar coded on unit packs and intermediate containers	44
4.5.1.2	Information to be bar coded on exterior containers	44

Source: https://assist.dla.mil -- Downloaded: 2016-10-21T11:29Z
Check the source to verify that this is the current version before use.

CONTENTS

PARAGRAPH		PAGE
4.5.1.3	Bar code character density	44
4.5.1.4	Bar code configurations and basic message formats	45
4.5.1.5	Complex bar code formats	47
4.5.1.6	Bar code format requirements	48
4.5.1.7	Methods of applying bar codes	48
4.5.1.8	Labeling wood containers	48
4.5.1.9	Labels on unit packs and intermediate containers	49
4.5.1.10	Labels on exterior shipping containers	49
4.5.2	Placement of bar code markings on unit packs and intermediate containers	50
4.5.2.1	Use of transparent containers	50
4.5.2.2	Bar coded serial numbers on unit packs and intermediate containers	50
4.5.3	Placement of bar code markings on exterior shipping containers	51
4.5.3.1	Boxes and crates under 10 cubic feet and those 10 cubic feet and over	51
4.5.3.1.1	Location of the bar code	51
4.5.3.2	Bar coded serial numbers on exterior shipping containers	53
4.5.3.3	Formats for bar coded data on exterior shipping containers and tags	54
4.5.3.4	Formats for bar coded tags to be used with exterior shipping containers	55
4.5.3.5	Bales, cloth-covered bundles, paper shipping sacks, bags and textile/laminated textile bags, rods, shafts, and pipes	56
4.5.3.5.1	Coils of wire	56
4.5.3.6	Barrels, drums, and other cylindrical containers	56
4.5.3.6.1	Markings on the tops of barrels, drums, and other cylindrical containers	57
4.5.3.7	Reels or spools of cable, wire, and rope	58
4.5.3.8	Paper and cloth-wrapped rolls	58
4.5.3.9	Palletized unit loads	58
4.5.3.10	Unpacked major equipment	59
4.5.3.11	Multipacks	59
4.5.3.12	Sets, kits, and outfits (SKO)	59

Source: https://assist.dla.mil -- Downloaded: 2016-10-21T11:29Z
Check the source to verify that this is the current version before use.

CONTENTS

PARAGRAPH		PAGE
4.5.3.13	Materiel destined for resale	59
4.5.3.14	Protected cargo (controlled, sensitive, classified, and pilferable items) and DPSC clothing and textile (C&T) items	59
4.5.3.15	Bundled wood products	59
4.5.3.16	Tires	60
4.5.3.17	(Army Only) Small arms weapons containers	60
4.5.3.17.1	Bar code label requirements	60
4.5.3.17.2	Bar code message description	60
4.6	Foreign Military Sales (FMS) marking requirements	60
4.6.1	Minimum package size	61
4.6.2	Multipacks	61
4.6.3	Contractor-originated shipments	61
4.6.4	Shipments originated by DOD activities	61
4.7	Additional marking requirements for specific commodities	63
4.7.1	Ammunition and explosives	63
4.7.2	Medical material	63
4.7.3	Semiperishable and perishable subsistence	63
4.7.4	Hazardous materials	63
4.7.5	Shipments to North Atlantic Treaty Organization (NATO) countries	63
4.7.6	Petroleum products	63
4.7.7	Unfabricated steel mill products	63
4.7.8	Household goods	63
4.7.9	Tires	63
4.7.10	Shelf-life items	63
5.	DETAILED REQUIREMENTS	64
5.1	Markings and marking materials	64
5.1.1	Marking materials	64
5.1.1.1	Waterproofing materials used as protective coatings	64
5.1.1.2	Stencil-marking material	64
5.1.1.3	Obliterating lacquer, enamel, or paint	64
5.1.1.4	Lithographing, embossing, roller coating, or stamping	64

Source: https://assist.dla.mil -- Downloaded: 2016-10-21T11:29Z
Check the source to verify that this is the current version before use.

CONTENTS

PARAGRAPH		PAGE
5.1.2	Labels, paper, pressure-sensitive, water-resistant	64
5.1.2.1	Protective coating of labels	65
5.1.3	Tags	65
5.1.4	Water-resistant envelopes	65
5.1.5	Packing list protectors	65
5.1.6	Conditions of surfaces to be marked	66
5.1.7	Legibility, durability, and color of markings	66
5.1.8	Methods of marking unit packs, intermediate and exterior containers, and loose or unpacked items	66
5.1.8.1	Stenciling	66
5.1.8.2	Machine printing	66
5.1.8.3	Labels	67
5.1.8.3.1	Use of labels	67
5.1.8.3.2	Unit pack labels	67
5.1.8.3.3	Affixing and securing paper labels (except for labels on vehicles and related equipment)	67
5.1.9	Marking board or marking panel	67
5.1.10	Size of markings	68
5.2	Special markings	68
5.2.1	Shelf-life markings	68
5.2.2	Project code markings	70
5.2.3	Transportation special handling/ protective services	71
5.2.4	Structural markings	71
5.2.5	Valuable and security items	71
5.2.6	Marking of Agency for International Development (AID) shipments (Office of Public Safety and Disaster Relief)	72
5.2.7	Special handling, including arrows and FRAGILE/DELICATE markings	72
5.2.8	Warranty markings	73
5.2.9	Method II marking	74
5.2.10	Magnetized materials suitable for and not suitable for shipment via military aircraft	74
5.2.11	Magnetic tape with data	74
5.2.12	Engineering or technical order changes or modifications	75

Source: https://assist.dla.mil -- Downloaded: 2016-10-21T11:29Z
Check the source to verify that this is the current version before use.

CONTENTS

PARAGRAPH		PAGE
5.2.13	Serial number	76
5.2.14	Lot, batch, or identification control numbers	76
5.2.15	Export permit number	76
5.2.16	Set or assembly markings	77
5.2.16.1	Set or assembly (component parts of disassembled items with or without serial numbers)	77
5.2.16.2	Single stock-numbered and part-numbered sets	78
5.2.17	Consolidation containers	78
5.2.18	Expedited handling - not mission capable supply (NMCS) and 999	78
5.2.19	Equipment which includes a battery (other than self-propelled equipment or ammunition)	79
5.2.20	Center of balance and sling or lifting points	79
5.2.21	Load bearing areas and lift points	80
5.2.22	Axle weight markings	80
5.2.23	Electrostatic discharge (ESD) sensitive devices	81
5.2.23.1	Unit packs	81
5.2.23.2	Intermediate and exterior containers	81
5.2.24	Materiel condition markings	83
5.2.25	Hardness critical item (HCI)	84
5.3	Exterior container documentation	84
5.3.1	Packing lists	85
5.3.1.1	Single stock-numbered and part-numbered assembled sets	85
5.3.1.2	DD Form 250 (Materiel Inspection and Receiving Report)	86
5.3.1.3	DD Form 1155 (Order for Supplies or Services/Request for Quotation)	86
5.3.1.4	Packing lists for DOD-generated shipments	86
5.3.1.5	Application of packing lists	86
5.3.1.6	Alternate application of packing lists	87
5.3.2	DD Form 1348-1, DD Form 1348-1A, and APLs	87
5.3.2.1	Shipment units of single-line items	87
5.3.2.2	Shipment units of multiple-line items	87

Source: https://assist.dla.mil -- Downloaded: 2016-10-21T11:29Z
Check the source to verify that this is the current version before use.

CONTENTS

PARAGRAPH		PAGE
5.3.2.3	DD Form 1348-1 and DD Form 1348-1A for FMS shipments	88
5.3.2.4	Alternate method of attaching the documentation that accompanies shipments to fiberboard boxes	88
5.3.2.5	Alternate method of attaching the documentation that accompanies small parcel shipments	89
5.3.2.6	Method of attaching accompanying documentation for shipments of unboxed vehicles and wheeled/ tracked items	89
5.3.2.7	Bar coded data requirements	89
5.3.2.8	Bar code symbology	90
5.3.2.9	Computer-generated forms	92
5.3.3	Exceptions to the use of exterior documentation, such as packing lists, DD Forms 250, DD Forms 1155, DD Forms 1348-1, and DD Forms 1348-1A	92
5.4	Hazardous materials (HAZMAT)	93
5.4.1	HAZMAT marking and labeling requirements	93
5.4.2	Proper shipping name and identification number	94
5.4.3	Marking and labeling of air and water shipments	94
5.4.4	Precautionary marking and labeling by other statutes or regulations	95
5.4.5	Identifying containers and packagings	96
5.4.5.1	DOT specifications	96
5.4.5.2	UN-recommended POP certification markings	96
5.4.5.2.1	UN symbol and size of lettering	96
5.4.5.2.2	Contractor's responsibilities	98
5.4.5.3	Containers manufactured to a Government drawing, packaging drawing, or specification	98
5.4.5.4	DOT exemptions	98
5.4.5.4.1	DD Form 1387-2 used with DOT exemption 7573 or 9232	98
5.4.5.5	Certification of Equivalency (COE)	99
5.4.5.6	Competent Authority Approval	99

Source: https://assist.dla.mil -- Downloaded: 2016-10-21T11:29Z
Check the source to verify that this is the current version before use.

CONTENTS

PARAGRAPH		PAGE
5.4.5.7	Overpack/multipack containers	99
5.4.5.8	Pre-existing palletized unit loads of HAZMAT	99
5.4.6	Documentation for hazardous materials	100
5.4.7	Flash point marking	100
5.4.8	Specific hazards	100
5.4.8.1	Asbestos	100
5.4.8.2	Polychlorinated biphenyls	101
5.4.9	Hazardous chemical warning labels	101
5.4.10	Kits containing HAZMAT	103
5.4.11	Radioactive material marking and labeling requirements	103
5.4.11.1	Nuclear Regulatory Commission (NRC) interior/storage container label	103
5.4.11.2	Radioactive materials requiring an NRC label	104
5.4.11.3	Transportation of radioactive materials	104
5.4.11.4	Exceptions to the use of radioactive material labels	105
6.	NOTES (Not applicable)	111

TABLE		
I	Standard English-metric equivalents	1
II	MIL-STD-129 English-metric conversions	2
III	Supply-type labels	106
IV	Shelf-life codes	107
V	Application of supply condition codes to shelf-life items	108
VI	Hazardous materials classification warnings	110
INDEX		112

Source: https://assist.dla.mil -- Downloaded: 2016-10-21T11:29Z
Check the source to verify that this is the current version before use.

1. SCOPE

1.1 Purpose. This standard provides the minimum requirements for the uniform marking of military supplies and equipment for shipment and storage. It accommodates the requirements for movement processing as specified in DOD 4000.25-1-M, Military Standard Requisitioning and Issue Procedures (MILSTRIP); DOD 4000.25-2-M, Military Standard Transaction Reporting and Accounting Procedures (MILSTRAP); and DOD 4500.32-R, Military Standard Transportation and Movement Procedures (MILSTAMP).

1.2 Applicability. Unless exempted in whole or in part by paragraphs 4.7.1 thru 4.7.10, the marking of all supplies and equipment shall be as specified in this standard. As defined in ASTM D996, marking is "the application of numbers, letters, labels, tags, symbols, or colors to provide identification and to expedite handling during shipment and storage."

1.2.1 Exceptions, exemptions, and additions. The marking requirements specified in this standard are not all inclusive. Any marking exception, exemption, or addition to the requirements herein must be specified in the acquisition document.

1.3 English-metric conversion. In order to accommodate the requirements of DOD Directive 4120.18, Metric System of Measurement, two tables describing English-metric conversion applicable to this standard are provided. For convenience in calculation, metric equivalents are expressed to two decimal places (nearest hundredth), wherever practical.

TABLE I. Standard English-metric equivalents

Volume:

1 fluid ounce	= 29.57 milliliters	1 quart	= 0.95 liter
1 pint	= 0.47 liter	1 gallon	= 3.79 liters

Weight:

1 ounce (avoirdupois) = 28.35 grams
1 pound (avoirdupois) = 453.59 grams or 0.454 kilogram

Length:

1 inch	=	2.54 centimeters
1 foot	=	30.48 centimeters or 0.305 meter
39.37 inches	=	1 meter (3.28 feet = 1 meter)

Source: https://assist.dla.mil -- Downloaded: 2016-10-21T11:29Z
Check the source to verify that this is the current version before use.

TABLE II. MIL-STD-129 English-metric conversions

Volume (Liquids):

Gallons	=	Liters
1		3.79
5		18.95
50		189.50
55		208.45

Weight:

Ounces	=	Grams
1		28.35
10		283.50

(1000 grams = 1 kilogram)

Volume (Solids):

Cubic feet	=	Cubic meter
1.0		0.030
1.2		0.036
1.3		0.039
2.0		0.060
2.5		0.075
3.0		0.090
4.1		0.123
4.7		0.141
5.3		0.160

Cubic feet	=	Cubic meters
6.0		0.18
6.5		0.195
8.4		0.25
9.0		0.27
10.0		0.30
12.0		0.36
30.0		0.90
60.0		1.80
66.5		1.995

Pounds	=	Kilograms
1.		0.45
2.2		1.0
10.		4.54
11.		4.99
50.		22.7
52.		23.61
65.		29.51
75.		34.05

Pounds	=	Kilograms
100		45.4
125		56.75
144		65.37
150		68.10
200		90.80
500		227.0
1000		454.0
1700		771.8

Inches	=	Centimeters
0.0258		0.07
0.03		0.08
0.0625		0.16
0.095 (3/32)		0.24
0.10		0.25
0.125 (1/8)		0.32
0.188 (3/16)		0.48
0.375 (3/8)		0.95

Inches	=	Centimeters
0.50		1.27
0.875 (7/8)		2.22
0.90		2.29
1.0		2.56
1.5		3.81
2.0		5.08
2.5		6.35
3.0		7.62

Source: https://assist.dla.mil -- Downloaded: 2016-10-21T11:29Z
Check the source to verify that this is the current version before use.

TABLE II. MIL-STD-129 English-metric conversions - Continued.

Inches	=	Centimeters	Inches	=	Centimeters
4.0		10.16	50		127.0
5.0		12.70	100		254.0
10.0		25.40	144		365.76

NOTE: 10 millimeters equals 1 centimeter.

Feet	=	Meters
1		0.305
3.28		1.0
25		7.62
50		15.24
150		45.73

Temperature conversion:

To change degrees Celsius (C) to degrees Fahrenheit (F), multiply temperature by 1.8 and add 32 degrees F.

To change degrees Fahrenheit (F) to degrees Celsius (C), subtract 32 from the temperature and divide by 1.8.

Degrees Fahrenheit	=	Degrees Celsius
0		-18
32		0
35		2
46		8
100		38
212		100

Source: https://assist.dla.mil -- Downloaded: 2016-10-21T11:29Z
Check the source to verify that this is the current version before use.

2. APPLICABLE DOCUMENTS

2.1 Government documents.

2.1.1 Specifications and standards. The following specifications and standards form a part of this document to the extent specified herein. Unless otherwise specified, the issues of these documents are those listed in the issue of the Department of Defense Index of Specifications and Standards (DODISS) and supplement thereto, cited in the solicitation.

SPECIFICATIONS

FEDERAL

A-A-900 - Tag, Shipping (Paper)
A-A-1907 - Protector, Packing List
TT-P-38 - Paint, Aluminum, Ready-mixed
UU-T-81 - Tag, Shipping and Stock
PPP-E-540 - Envelope, Water Resistant, for Packing Lists and Shipping Documents
PPP-T-60 - Tape, Packaging, Waterproof
PPP-T-76 - Tape, Pressure-sensitive Adhesive, Packaging/ Paper (for Carton Sealing)

MILITARY

MIL-T-4 - Tires, Pneumatic, and Inner Tube, Pneumatic Tire, Tire With Flap, Packaging and Packing of
MIL-P-116 - Preservation, Methods of
MIL-B-117 - Bag, Sleeve, and Tubing - Interior Packaging
MIL-S-4473 - Shielding of Magnetron Tubes and Magnets for Air Shipment
MIL-C-46168 - Coating, Aliphatic Polyurethane, Chemical Agent Resistant
MIL-P-52905 - Paint, Arctic Camouflage, Removable
MIL-C-53039 - Coating, Aliphatic Polyurethane, Single Component, Chemical Agent Resistant
MIL-L-61002 - Labels, Pressure-sensitive Adhesive, for Bar Codes and Other Markings

STANDARDS

FEDERAL

FED-STD-595 - Color (Requirements for Individual Color Chips (3X5 Supplements))

Source: https://assist.dla.mil -- Downloaded: 2016-10-21T11:29Z
Check the source to verify that this is the current version before use.

MILITARY

MIL-STD-129-1	- Marking for Shipment and Storage - Ammunition and Explosives
MIL-STD-129-2	- Marking for Shipment and Storage - Medical Material
MIL-STD-129-3	- Marking for Shipment and Storage - Semiperishable and Perishable Subsistence
MIL-STD-130	- Identification Marking of U.S. Military Property
MIL-STD-163	- Steel Mill Products, Preparation for Shipment and Storage
MIL-STD-212	- Preparation of Household Goods and Unaccompanied Baggage for Shipment, Storage, and Intra City and Intra Area Movements
MIL-STD-290	- Packaging of Petroleum and Related Products
MIL-STD-1168	- Lot Numbering of Ammunition
MIL-STD-1189	- Bar Code Symbology

(Unless otherwise indicated, copies of Federal and military specifications and standards are available by mail from the DODSSP - Customer Service, Standardization Documents Order Desk, 700 Robbins Avenue, Building 4D, Philadelphia, PA 19111-5094.)

2.1.2 Other Government documents and publications. The following other Government documents and publications form a part of this document to the extent specified herein. Unless otherwise specified, issues are those cited in the solicitation.

CODE OF FEDERAL REGULATIONS (CFR)

Title 10 CFR - Atomic Energy
Title 29 CFR - Labor
Title 40 CFR - Protection of Environment
Title 49 CFR - Transportation

DEFENSE FEDERAL ACQUISITION REGULATION (DFAR) SUPPLEMENT

(Application for copies should be addressed to Superintendent of Documents, U.S. Government Printing Office, Washington, DC 20402.)

JOINT MILITARY

AFMC 800-29/AMC-R 700-103/ NAVSUPINST 4030.50/MCO 4030.39/DLAR 4145.37	- Policies and Procedures for Hazardous Materials Package Certification
AFR 71-4/TM 38-250/NAVSUP PUB 505/MCO P4030.19/ DLAM 4145.3	- Packaging and Materials Handling - Preparing Hazardous Materials for Military Air Shipments

Source: https://assist.dla.mil -- Downloaded: 2016-10-21T11:29Z
Check the source to verify that this is the current version before use.

AR 700-15/NAVSUPINST 4030.28D/AFR 71-6/MCO 4030.33D/DLAR 4145.7	- Packaging of Materiel
DLAR 4145.41/AR 700-143/ AFR 71-5/NAVSUPINST 4030.55/MCO 4030.40	- Performance Oriented Packaging of Hazardous Materials
DOD 4000.25-1-M	- MILSTRIP
DOD 4000.25-2-M	- MILSTRAP
DOD 4000.25-6-M	- DOD Activity Address Directory
DOD 4140.27-M	- Shelf-life Item Management Manual
DOD 4145.19-R-1	- Storage and Materials Handling
DOD 4500.32-R	- MILSTAMP
DOD 4500.34-R	- Personal Property Traffic Management Regulation
DOD 6050.5H	- DOD Hazardous Chemical Warning Labeling System
Cataloging Handbook H4/H8	- Commercial and Government Entity

(DOD activities should request copies of Cataloging Handbook H4/H8 from the Commander, Defense Logistics Services Center, Battle Creek, MI 49017-3084. All other joint military publications listed above should be requisitioned through the applicable Service/Agency publications distribution office. Non-DOD activities should obtain copies of the publications from the Defense Logistics Agency, ATTN: DLA-XPD, Cameron Station, Alexandria, VA 22304-6100, Commercial Phone: (703) 274-6011.)

NORTH ATLANTIC TREATY ORGANIZATION (NATO)

STANAG 4281 - NATO Standard Marking for Shipment and Storage

(Copies of Standardization Agreements (STANAGs) are available by mail from the DODSSP - Customer Service, Standardization Documents Order Desk, 700 Robbins Avenue, Building 4D, Philadelphia, PA 19111-5094.)

UNITED STATES POSTAL SERVICE (USPS)

USPS Publication No. 52 - Acceptance of Hazardous, Restricted, or Perishable Matter

(Application for copies should be addressed to the Materiel Distribution Center, Route 206, VA Supply Depot, Somerville, NJ 08877-0001. A check for $1.00 payable to the U.S. Postal Service must accompany each application.)

2.2 Non-Government publications. The following documents form a part of this document to the extent specified herein. Unless otherwise specified, the issues of the documents which are DOD

Source: https://assist.dla.mil -- Downloaded: 2016-10-21T11:29Z
Check the source to verify that this is the current version before use.

adopted are those listed in the issue of the DODISS cited in the solicitation. Unless otherwise specified, the issues of documents not listed in the DODISS are the issues of the documents cited in the solicitation.

ASTM

ASTM D996 - Standard Terminology of Packaging and Distribution Environments
ASTM D3953 - Standard Specification for Strapping, Flat Steel (and Seals)

(Application for copies should be addressed to ASTM, 1916 Race Street, Philadelphia, PA 19103.)

INTERNATIONAL AIR TRANSPORT ASSOCIATION (IATA)

Dangerous Goods Regulations

(Application for copies should be addressed to International Air Transport Association, 2000 Peel Street, Montreal, Quebec, Canada H3A 2R4.)

INTERNATIONAL CIVIL AVIATION ORGANIZATION (ICAO)

Technical Instructions for the Safe Transportation of Dangerous Goods by Air

(Application for copies should be addressed to International Regulations Publishing and Distributing Organization, P.O. Box 60105, Chicago, IL 60660.)

INTERNATIONAL MARITIME ORGANIZATION (IMO)

International Maritime Dangerous Goods Code

(Application for copies should be addressed to International Maritime Organization, 4 Albert Embankment, London SE1 7SR, England.)

(Non-Government standards and other publications are normally available from the organizations that prepare or distribute the documents. These documents also may be available in or through libraries or other informational services.)

2.3 Order of precedence. In the event of a conflict between the text of this document and the references cited herein, the text of this document takes precedence. Nothing in this document, however, supersedes applicable laws and regulations unless a specific exemption has been obtained.

Source: https://assist.dla.mil -- Downloaded: 2016-10-21T11:29Z
Check the source to verify that this is the current version before use.

3. DEFINITIONS

General packaging definitions may be found in ASTM D996 and other referenced documents. Hazardous materials definitions are listed in Title 49 CFR, part 172, and in other related publications. For purposes of this standard, the following definitions shall apply.

3.1 Abbreviations and acronyms. The abbreviations and acronyms used in this standard are defined as follows:

AID	-	Agency for International Development
APL	-	Automated Packing List
APO	-	Air Post Office
ASTM	-	American Society for Testing and Materials
BCID	-	Bar Coded Identification Markings
BCSN	-	Bar Coded Serial Number
CAA	-	Competent Authority Approval
CAGE	-	Commercial and Government Entity
C&T	-	Clothing and Textiles
CARC	-	Chemical Agent Resistant Coating
CASKO	-	Component, Assembly, Set, Kit, or Outfit
CFR	-	Code of Federal Regulations
CLIN	-	Contract Line Item Number
COC	-	Certificate of Conformance
COE	-	Certification of Equivalency
CON CODE	-	Supply Condition Code
CONTR	-	Contract Data Markings
CONTR NO	-	Contract Number
CONUS	-	Continental United States
CPI	-	Characters Per Inch
CU	-	Cube
DCMAO	-	Defense Contract Management Area Operations
DFAR	-	Defense Federal Acquisition Regulation
DIST	-	Distribution Code
DOD	-	Department of Defense
DODAAC	-	Department of Defense Activity Address Code
DODISS	-	Department of Defense Index of Specifications and Standards
DOT	-	Department of Transportation
DPSC	-	Defense Personnel Support Center
DTS	-	Defense Transportation System
ESD	-	Electrostatic Discharge
EXP	-	Expiration
FID	-	Field Identifier
FMS	-	Foreign Military Sales
FPO	-	Fleet Post Office
FSC	-	Federal Supply Class
GSA	-	General Services Administration
HAZMAT	-	Hazardous Materials

Source: https://assist.dla.mil -- Downloaded: 2016-10-21T11:29Z
Check the source to verify that this is the current version before use.

HCI	-	Hardness Critical Item
HRI	-	Human-readable Interpretation
IATA	-	International Air Transport Association
ICAO	-	International Civil Aviation Organization
IDENT	-	Identification Markings
IMDG	-	International Maritime Dangerous Goods
IMO	-	International Maritime Organization
INSP	-	Inspection
kPa	-	Kilopascal
MAPAD	-	Military Assistance Program Address Directory
MCP	-	Materiel Consolidation Point
MFD	-	Manufactured
MILSTAMP	-	Military Standard Transportation and Movement Procedures
MILSTRAP	-	Military Standard Transportation Reporting and Accounting Procedures
MILSTRIP	-	Military Standard Requisitioning and Issue Procedures
MILVAN	-	Military-owned Demountable Container
MRO	-	Materiel Release Order
MTMC	-	Military Traffic Management Command
MWO	-	Modification Work Order
NA	-	North American
NATO	-	North Atlantic Treaty Organization
NIIN	-	National Item Identification Number
NMCS	-	Not Mission Capable Supply
NOA	-	Notice of Availability
n.o.s.	-	Not Otherwise Specified
NRC	-	Nuclear Regulatory Commission
NSN	-	National/NATO Stock Number
OCONUS	-	Outside Continental United States
OCR	-	Optical Character Reader
OF	-	Optional Form
OSHA	-	Occupational Safety and Health Administration
PCB	-	Polychlorinated Biphenyl
PIIN	-	Procurement Instrument Identification Number
PN or P/N	-	Part Number
P/O	-	Part Of
POD	-	Port of Debarkation
POE	-	Port of Embarkation
POP	-	Performance-oriented Packaging
PSN	-	Proper Shipping Name
QTY	-	Quantity
QUP	-	Quantity Per Unit Pack
RDD	-	Required Delivery Date
RIC	-	Routing Indicator Code
RL	-	Reel
RO	-	Roll
ROD	-	Report of Discrepancy

Source: https://assist.dla.mil -- Downloaded: 2016-10-21T11:29Z
Check the source to verify that this is the current version before use.

SEAVAN	-	Commercial- or Government-owned (or -leased) Shipping Container
SER NO	-	Serial Number
SF	-	Standard Form
SKO	-	Set, Kit, and Outfit
SLC	-	Shelf-life Code
STANAG	-	Standardization Agreement
TAC	-	Type of Address Code
TCN	-	Transportation Control Number
TP	-	Transportation Priority
UI	-	Unit of Issue
UN	-	United Nations
UP	-	Unit Price
UPC	-	Universal Product Code
USPS	-	United States Postal Service
WT	-	Weight

3.2 Assembly. An item of supply, composed of two or more related parts, that is capable of disassembly (e.g., carburetor, powerpack, intermediate frequency circuit amplifier, etc.).

3.3 Bar code. An array of rectangular bars and spaces in a predetermined pattern representing coded elements of data that can be automatically read and interpreted by automatic bar code reading devices.

3.4 Cognizant activity. The activity having responsibility for a contract or jurisdiction over it. At a contractor's facility, the cognizant activity is the administrative contracting officer or the procuring contracting officer. Contractor personnel do not qualify as the cognizant activity. At DOD installations, this is the head of the agency, bureau, command, or service that is responsible for storage and shipment.

3.5 Commercial and Government Entity (CAGE) code. A five-position alphanumeric code applicable to all activities which have produced or are producing items used by the Federal Government and to Government activities which control design or are responsible for development of certain specifications, drawings, or standards which control the design of items. CAGE codes are listed in the CAGE Cataloging Handbook H4/H8.

3.6 Consignee (receiver). Party to whom materiel is shipped and whose name and address appear in the "ULTIMATE CONSIGNEE OR MARK FOR" block of the shipping label.

3.7 Consignor (shipper). Party who ships materiel and whose name and address appear in the "FROM" block of the shipping label.

Source: https://assist.dla.mil -- Downloaded: 2016-10-21T11:29Z
Check the source to verify that this is the current version before use.

3.8 Consolidation container. A container used to consolidate more than one line item into a single shipping container to be shipped to one destination, but not necessarily to one addressee.

3.9 Contract Line Item Number (CLIN). A 4-6 digit number used to identify each delivery date and/or destination's quantity in the contract schedule.

3.10 Contract number or purchase order number (including four-digit delivery order number or call number, when specified). The acquisition instrument identification number, appearing on the acquisition document. Some DOD contracts refer to the contract or purchase order number, together with the delivery order number, as the procurement instrument identification number (PIIN).

3.11 Date assembled. The date items or parts are assembled into components, sets, kits, or assemblies, or the date that components, sets, kits, or assemblies are assembled into a unit.

3.12 Date packed. The date on which the product (item) was packed in the unit pack, regardless of the date of the exterior packing, additional processing, or shipping.

3.13 Defense Transportation System (DTS). The DTS consists of military-controlled or -operated terminal facilities, Air Mobility Command controlled or arranged airlift, Military Sealift Command controlled or arranged sealift, and Government-controlled air or land transportation.

3.14 Electrostatic Discharge (ESD) sensitive devices. Electrical and electronic devices that are susceptible to damage from electrostatic discharge (static electricity). These devices include, but are not limited to, integrated circuits and discrete devices (e.g., resistors, transistors, and other semiconductor devices).

3.15 Exterior container. A container, bundle, or assembly that is sufficient by reason of material, design, and construction to protect unit packs and intermediate containers and their contents during shipment and storage. It can be a unit pack or a container with a combination of unit packs or intermediate containers. An exterior container may or may not be used as a shipping container.

3.16 Hardness critical item (HCI). Items at any assembly level which are mission critical and could be designed, repaired, manufactured, installed, or maintained for normal operation and yet degrade a system's survivability in a nuclear environment if hardness were not considered. HCIs shall only be replaced with other HCI-approved items.

Source: https://assist.dla.mil -- Downloaded: 2016-10-21T11:29Z
Check the source to verify that this is the current version before use.

3.17 Hazardous materials. Substances or materials which have been determined by the Secretary of Transportation to be capable of posing an unreasonable risk to health, safety, and property when transported in commerce and which have been so designated in Title 49 CFR and in other hazardous materials publications.

3.18 Human-readable interpretation (HRI). Exact interpretation of the encoded bar code data presented in a human-readable font.

3.19 Interior container. A container that is inside another container. It may be a unit pack or an intermediate container that is placed inside an exterior container or shipping container. It is not to be used as a shipping container.

3.20 Intermediate container. A wrap, box, or bundle containing two or more unit packs of identical items.

3.21 Item description. The name and description of an item as it appears in the contract, purchase order, or requisition. The source document for this information is the DD Form 61 (Request for Nomenclature), which contains the exact name and description of an item. Descriptions for clothing and textile items on unit packs and intermediate containers shall always include the item size. Abbreviated descriptions authorized by the cognizant activity are permitted.

3.22 Kit. A packed unit or group of items normally used in modification, installation, or survival.

3.23 Levels of protection. The extent of preservation and packing required to prevent deterioration or damage to supplies and equipment due to hazards to which they may be exposed during shipment and storage. Additional information on specific requirements for the different levels of protection is contained in AR 700-15/NAVSUPINST 4030.28D/AFR 71-6/MCO 4030.33D/DLAR 4145.7.

3.23.1 Levels of preservation. The levels of preservation are level A, designed to protect an item of supply during shipment, handling, storage, and distribution to consignees worldwide; level B, designed to the unique requirements of selected commodities for which the deprocessing demands of level A preservation (would) bear significantly on the operational readiness of the item (e.g., vehicles and weapons); and level C, designed to protect an item for limited storage and immediate use.

3.23.2 Levels of packing. The levels of packing are level A, which provides maximum protection to meet the most severe worldwide shipment, handling, and storage conditions; level B, which provides intermediate protection to meet moderate worldwide

Source: https://assist.dla.mil -- Downloaded: 2016-10-21T11:29Z
Check the source to verify that this is the current version before use.

shipment, handling, and storage conditions; and level C, which provides minimum protection to meet conditions of a known favorable logistics path.

3.24 Loose or unpacked item. An identifiable item that is unencumbered by a tie, wrap, or container.

3.25 Lot, batch, or identification control number. That series of numbers or letters, or both, that are established to record the production and control of the product.

3.26 Manufacturer. A person or firm who owns and operates a factory or establishment that produces on the premises materials, supplies, articles, or equipment required under the contract.

3.27 Military methods of preservation. Preservation methods and procedures defined in MIL-P-116.

3.28 Modification work order (MWO). Official publication providing authentic and uniform instructions for the alteration and modification of existing materiel, including joint service publications published as retrofit orders.

3.29 National/NATO stock number (NSN). A 13-digit number that is divided into two parts, the Federal supply class (FSC) number and the national item identification number (NIIN). The FSC is the first four digits of the NSN that establishes its relationship to other items within the same FSC. The NIIN is the last nine digits of the NSN. The first two digits identify the country assigning the number and the remaining seven are a serially assigned number. When shown in the contract/requisition, the NSN includes any prefixes and suffixes.

3.30 Packaging. The processes and procedures used to protect material from deterioration, damage, or both. It includes cleaning, drying, preserving, packing, marking, and unitizing.

3.31 Packing. The assembly of items into unit packs and intermediate or exterior containers, with the necessary blocking, bracing, cushioning, weatherproofing, reinforcement, and marking.

3.32 Palletized unit load. A quantity of items, packed or unpacked, which is arranged on a pallet in a specified manner and is secured, strapped, or fastened on the pallet so that the whole palletized load is handled as a single unit.

3.33 Parcel post. Any packed materiel placed in United States Postal Service channels.

Source: https://assist.dla.mil -- Downloaded: 2016-10-21T11:29Z
Check the source to verify that this is the current version before use.

3.34 Performance-oriented packaging (POP). Type of packaging based on the ability of packaging to perform to a specific level of integrity when subjected to performance tests.

3.35 Polychlorinated biphenyl (PCB). An organic chemical, synthetically manufactured and used primarily in electrical equipment. It is harmful to human health and the environment.

3.36 Port of debarkation (POD). An authorized point where shipments enter a country, either into the continental United States (CONUS) or into a foreign country.

3.37 Port of embarkation (POE). An authorized point where shipments leave a country, either from CONUS or from a foreign country.

3.38 Preservation. The application of protective measures, including cleaning, drying, preservative materials, barrier materials, cushioning, and containers, when necessary. Military methods of preservation are defined in MIL-P-116.

3.39 Project code. A three-position alphanumeric code which identifies plans, programs, and exercises.

3.40 Proper shipping name (PSN). The name of a hazardous material shown in Roman print (not italics) in part 172 of Title 49 CFR and in other hazardous materials related publications.

3.41 Protected cargo. Items that are required to be secured, identified, segregated, handled, or accounted for in such a manner as to ensure their safeguard or integrity. Protected cargo is subdivided into classified, controlled, pilferable, and sensitive items.

3.41.1 Classified items. Items that are of a classified nature and have a security classification.

3.41.2 Controlled items. Items that require additional control and security as prescribed in various regulations and statutes. Controlled items include money, negotiable instruments, narcotics, registered mail, precious metal alloys, ethyl alcohol, and drug abuse items.

3.41.3 Pilferable items. Items that are vulnerable to theft because of their ready resale potential, such as cigarettes, alcoholic beverages, cameras, electronic equipment, and clothing and textiles.

Source: https://assist.dla.mil -- Downloaded: 2016-10-21T11:29Z
Check the source to verify that this is the current version before use.

3.41.4 Sensitive items. Items such as small arms, ammunition, and explosives which have a ready use during civil disturbances and other types of domestic unrest or may be used by criminal elements. If they are in the hands of militant or revolutionary organizations, they present a definite threat to public safety.

3.42 Quantity. The number of units of issue (lb, oz, ea) in a unit pack, an intermediate container, or a shipping container or in a bundle or a secure lift. (See 3.56.1 for definitive unit of issue and 3.56.2 for nondefinitive unit of issue.)

3.43 Quantity per unit pack (QUP). The quantity of items in a unit pack given in the terminology of the definitive unit of issue. If a nondefinitive unit of issue is assigned to the stock item, the unit of issue shall be further quantified by a unit of measure and measurement quantity (see 3.56.3).

3.44 Radioactive material. Any material, or combination of materials, which spontaneously emit ionizing radiation, including materials that possess artificial, induced, and natural radioactivity. Materials in which the estimated specific activity is not greater than 0.002 microcurie/gram of material, and in which the radioactivity is essentially uniformly distributed, are not considered to be radioactive materials.

3.45 Required delivery date (RDD). The day of the year (e.g., 087, 198, etc.) specified on the requisition when material is required by the requisitioner or the consignee.

3.46 Security assistance. A group of programs authorized by the Foreign Assistance Act of 1961, as amended, and the Arms Export Control Act, as amended, or other related statutes by which the United States provides defense articles, military training, and other defense-related services by grant, credit, cash sale, lease, or loan in furtherance of national policies and objectives. Foreign Military Sales (FMS) is one of the security assistance programs.

3.47 Serial number. The number on the item assigned by the manufacturer or the Government for identification or control.

3.48 Set. Unit or units and their assemblies, subassemblies, and parts that are connected or associated together to perform an operational function (e.g., tool set, radio receiving set, etc.).

3.49 Shelf-life. The total period of time beginning with the manufactured date, cured date, assembled date, or packed date that an item may remain in the combined wholesale and retail storage system and still be suitable for issue and/or use by the user.

Source: https://assist.dla.mil -- Downloaded: 2016-10-21T11:29Z
Check the source to verify that this is the current version before use.

3.49.1 Assembled date. The date items or parts are assembled into components, assemblies, sets, kits, or outfits (CASKOs), or the date various CASKOs are assembled into a unit.

3.49.2 Cured date. The date the item or materiel was altered industrially, as to vulcanize (rubber) or to treat (synthetic elastomers) with heat or chemicals to make them infusible.

3.49.3 Expiration date. The date by which nonextendible shelf-life items (type I) should be discarded as no longer suitable for issue/use.

3.49.4 Inspection or test date. The date by which extendible shelf-life items (type II) should be subjected to inspection, tests, or restoration.

3.49.5 Manufactured date. The date the item, materiel, or commodity was produced, fabricated, processed, or formed for use.

3.49.6 Packed date. For items required to be marked, the packed date shall be the date on which the item was packaged in the unit pack, regardless of the date of packing, shipping, or additional processing.

3.50 Shelf-life code (SLC). A code assigned to a shelf-life item to identify the period of time beginning with the date of manufacture, cure, assembly, or pack and terminated by the date by which an item must be used (expiration date) or subjected to inspection, test, restoration, or disposal action.

3.51 Shelf-life item. It is an item of supply that possesses deteriorative or unstable characteristics to the degree that a storage time period must be assigned to ensure that the item will perform satisfactorily in service.

3.52 Shipping container. A container which meets carrier regulations and is of sufficient strength, by reason of material, design, and construction, to be shipped safely without further packing (e.g., wooden boxes or crates, fiber and metal drums, and corrugated and solid fiberboard boxes).

3.53 Stamping. Impressing or imprinting by metal dies or rubber stamps.

3.54 Transportation Control Number (TCN). The single standard shipment identification number for all DOD-sponsored movements (i.e., materiel and equipment and all vendor shipping transactions involving DOD materiel). The TCN is a 17-position alpha-numeric

Source: https://assist.dla.mil -- Downloaded: 2016-10-21T11:29Z
Check the source to verify that this is the current version before use.

data element assigned to control a shipment unit through the transportation system (to include CONUS shipments, shipments entering the DTS, and commercial systems).

3.55 Unitization. Assembly of containers comprised of one or more line items of supply into a single load so that the load can be handled as a unit through the distribution system.

3.56 Unit of issue (UI). The UI is a standard or basic quantity that is expressed as a unit and indicated in a requisition, contract, or order as the minimum quantity issued (e.g., bottle, can, dozen, each, foot, gallon, gross, pair, pound, yard, etc.).

3.56.1 Definitive unit of issue. A definitive UI is a type of UI designation that indicates an exact quantity of volume, linear measurement, weight, or count (e.g., assembly, each, kit, set, foot, etc).

3.56.2 Nondefinitive unit of issue. A nondefinitive UI is a type of UI designation that does not indicate an exact quantity of volume, linear measurement, weight, or count such as drum, can, box, or roll. When a nondefinitive UI is specified, it must be accompanied by a quantitative expression (e.g., 1 RO (150 ft) or 1 RL (50 ft)).

3.56.3 Quantitative expression. The exact quantity of volume linear measurement, weight, or count contained in a UI (e.g., 5 gallons, 100 feet, 10 pounds, 25 each, etc.).

3.57 Unit pack. The first tie, wrap, or container applied to a single item, or a quantity thereof, or to a group of items of a single stock number, preserved or unpreserved, which constitutes a complete or identifiable package. A unit pack is also often referred to as a "package" or merely as a "pack."

3.58 Warranty markings. Markings that apply when a shipment contains items with a service life defined in a specific amount of hours, a specific end date, or a specific operating time.

Source: https://assist.dla.mil -- Downloaded: 2016-10-21T11:29Z
Check the source to verify that this is the current version before use.

4. GENERAL REQUIREMENTS

4.1 Abbreviations. Authorized abbreviations shall be those listed in the applicable service implementing directives. The correct unit of issue (UI) for marking is the UI shown in the procurement contract or order. When approved by the cognizant activity concerned, abbreviations of the item descriptions are permitted. Periods shall not be used with abbreviations.

4.2 Unit pack, intermediate container, and exterior container identification and contract data markings. Figure 1 shows the content and approximate placement of the identification markings on unit packs and intermediate containers, while figure 2 shows the content and approximate placement of the identification and contract data markings on exterior containers. Unless they are specifically exempted in the procurement contract or order, these markings shall be applied to all contractor- or vendor-originated shipments. In order to highlight specific marking requirements discussed and illustrated throughout this standard, unit pack, intermediate container, and exterior container identification and contract data markings, which would normally be printed on the containers shown in the figures, have been replaced with the abbreviations "IDENT" and "CONTR," respectively. The abbreviations "IDENT" and "CONTR" shall appear only in the figures, which are for guidance only. The terms "identification markings" and "contract data markings" shall be used throughout the text of this standard. The exact placement of identification and contract data markings on specific containers may vary slightly from those shown in the figures. Bar code marking and placement requirements are discussed and illustrated in 4.5 through 4.5.3.17.2.

4.2.1 Identification markings on unit packs, intermediate containers, and unpacked items. Unless specifically exempted in the procurement contract or order, the following minimum identification information shall be marked on all unit packs, intermediate containers, and unpacked items in the order listed. This requirement applies to all unit packs and intermediate containers repacked for shipment by military installations. Any additional identification markings required by the contract shall be placed either below these markings or in a conspicuous location on the identification-marked side of the container. Unit packs used as exterior containers at the time of packaging shall be marked in accordance with 4.2.2. Hazardous items shall be marked with identification markings as specified herein and in 5.4.2.

a. NSN/NATO stock number (to include spaces or dashes and any prefix or suffix shown in the contract or requisition). If no NSN is assigned, then this line may be omitted.

Source: https://assist.dla.mil -- Downloaded: 2016-10-21T11:29Z
Check the source to verify that this is the current version before use.

b. CAGE code and part number (PN). CAGE code of the company awarded the contract for the item described in "c" below shall be shown followed by the PN assigned to the item. If a PN is specified in the contract or order, then only that PN shall be shown immediately after the CAGE code. The PN specified in the contract may be the PN assigned by the Government procuring activity, or it may be either the PN of the actual manufacturer or the PN assigned to the item by the company awarded the contract. If the item has no PN assigned to it or if no PN is required, then only the CAGE code of the company awarded the contract shall be shown. For shipments sent directly from a subcontractor to a DOD addressee, the CAGE code and PN of the company awarded the contract shall be shown. The letters "CAGE" and either "PN" or "P/N" shall be used to identify this information.

c. Item description or nomenclature.

d. Quantity and UI. A nondefinitive UI shall be accompanied by a quantitative expression such as "1 RO (100 FT)."

e. Contract number/purchase order number including four-digit delivery order or call number, when used.

f. Level of protection and date (e.g., "A 10/92" - level A protection (preservation) was provided in October 1992).

NOTE: When lot numbering in accordance with MIL-STD-1168 is specified, the contract number and date of protection (see 4.2.1e and f) are not required to be marked.

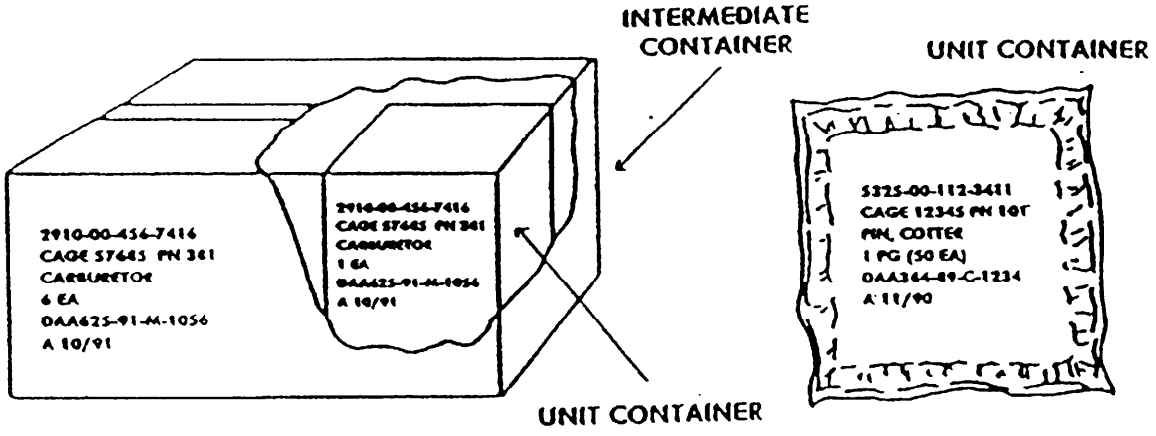

FIGURE 1. Unit pack and intermediate container IDENT markings. For bar code markings, see figures 22 and 23.

Source: https://assist.dla.mil -- Downloaded: 2016-10-21T11:29Z
Check the source to verify that this is the current version before use.

4.2.1.1 Placement of identification markings on unit packs, intermediate containers, and unpacked items (see figure 1). Markings on unit packs, intermediate containers, and unpacked items shall be so located as to allow the markings to be easily read when stored on shelves or when stacked and to ensure that the markings will not be destroyed when the pack or container is opened for inspection or until its contents have been used. The marking surface of a unit pack shall be the outermost wrap, bag, or container of the unit pack. When a barrier bag is used within an outer unit container, both the bag and the outermost container shall be marked. When specified, bundled items shall be marked with a tag or by affixing a paper label under one of the bundled ties. The required markings must be placed so that they are not obscured by any strapping or closure tape. Refer to 4.2.1 for the content and figure 1 for the placement of identification markings on all unit and intermediate containers. For information on the placement of bar code markings on unit packs and intermediate containers, see 4.5.2.

4.2.2 Identification markings on exterior containers (see figure 2). Unless specifically exempted in the procurement contract or order, the following minimum identification information shall be marked on exterior containers in the order listed. The identification markings shall be applied to the upper left two-thirds of the side of the container having the greatest overall, usable marking surface. Additional identification markings that are required by the contract shall be placed either below these markings or in a conspicuous location on the identification-marked side of the container. Refer to figure 2 for the proper placement of identification markings on all exterior containers. For information on the placement of bar code markings on exterior containers, see 4.5.3.1 through 4.5.3.17.2.

a. NSN/NATO stock number (see 4.2.1a).

b. CAGE code and PN (see 4.2.1b).

c. Item description or nomenclature.

d. Quantity and UI (see 4.2.1d).

e. Levels of protection and date packed (e.g., "A/B 10/92" - level A preservation, level B packing, and October 1992 as the month and year the exterior container was packed. Unit packs used as exterior containers such as bags or drums shall have only the level of packing and date packed applied (e.g., "B 10/92").

f. Gross weight and cube (see 4.2.2.2).

Source: https://assist.dla.mil -- Downloaded: 2016-10-21T11:29Z
Check the source to verify that this is the current version before use.

g. Proper shipping name (PSN) and North American (NA) or United Nations (UN) identification number, where assigned. The UN identification number contains the serial number assigned to the article or substance under the UN classification system. The PSN shall be distinct and separate from the item description and shall be placed below gross weight and cube data. The PSN is required even though it may be identical to the item description. For information on the marking and labeling requirements for hazardous materials, including the content and placement of the UN performance-oriented packaging (POP) certification markings, see 5.4.1 thru 5.4.11.4 of this standard.

NOTE: The inspection/test date and other shelf-life markings, when required, shall be applied below the identification markings and as specified in 5.2.1.

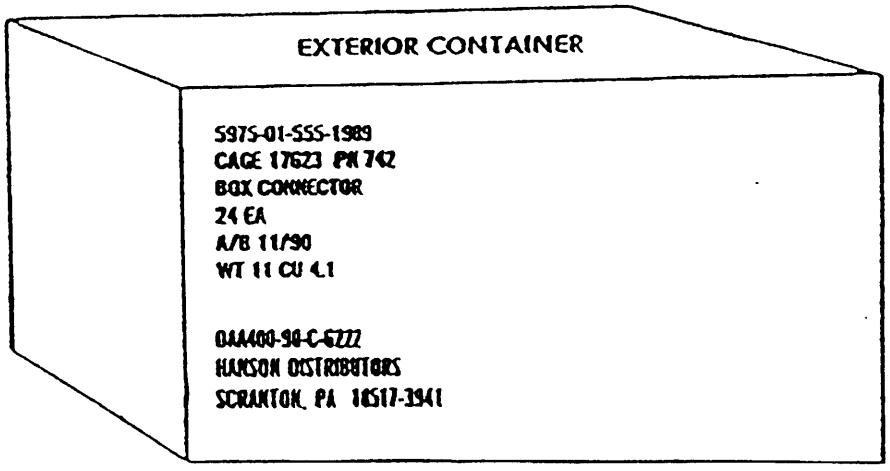

FIGURE 2. Exterior container IDENT and CONTR markings.

4.2.2.1 Marking for assorted items.

4.2.2.1.1 Related items. When an assortment of related items which cannot be identified under one stock number but which support a specific weapon system or end item is packed in a shipping container, the level of protection and date of pack (the date the shipping container was packed), gross weight, cube, and special markings shall be applied, along with a brief description of the contents in lieu of the entire identification data (e.g., spare parts to NSN XXXX). Kit or set components shall be segregated and identified within the shipping container by PN or NSN.

Source: https://assist.dla.mil -- Downloaded: 2016-10-21T11:29Z
Check the source to verify that this is the current version before use.

4.2.2.1.2 Unrelated items. When containers of unrelated items comprised of mixed NSNs which do not support a specific weapon system or end item are consolidated into a shipping container, the shipping container shall be marked with the following information in the order listed: the word "MULTIPACK" (line 1); the level of protection afforded the shipping container (level A, B, or C depending upon the type of shipping container used) and the date of pack (date the multipack itself was packed) (line 2); and the gross weight and cube (line 3). These markings are used in lieu of the identification markings required by 4.2.2. Hand printing on multipack shipping containers is not permitted except for gross weight and cube data and the date of pack.

Example:

MULTIPACK
A 10/92
WT 100 CU 6

NOTES:

1. In addition to any shelf-life markings, the words "CONTAINS SHELF-LIFE ITEMS" shall be placed below the identification markings on multipacks containing shelf-life material.

2. The words "WARRANTED ITEMS INSIDE" shall be placed immediately below the identification markings on multipacks that contain items covered by a warranty.

3. For information on the marking of multipacks that contain hazardous materials, see 5.4.5.7.

4. For Foreign Military Sales (FMS), all boxes containing multiple items (whether related or unrelated) shall be marked as multipacks as specified in this paragraph.

5. Caution markings shall be applied as required (e.g., FRAGILE, arrows, hazardous warning labels, etc.).

4.2.2.2 Marking of gross weight and cube (see figure 2). The capital letters "WT" and "CU" shall precede the gross weight and cube numerals. The gross weight shall be numerically indicated and shall be expressed in pounds rounded up to the nearest pound. The cube (cubic displacement) shall be calculated from the overall length, width, and height dimensions of the exterior shipping container, bundle, or secured lift. Irregular, cylindrical, or round items shall be considered to be rectangular solids. To calculate the cube, multiply the length by the width by the height in inches and divide the answer by 1728. The resulting cube shall be shown in cubic feet and shall be expressed in decimals rounded up to the nearest tenth of a cubic foot.

Source: https://assist.dla.mil -- Downloaded: 2016-10-21T11:29Z
Check the source to verify that this is the current version before use.

4.2.2.3 Omission of markings on exterior shipping containers of protected cargo (controlled, sensitive, classified, and pilferable items). Unless otherwise specified in the procurement contract or shipping document, the item description (nomenclature) shall be omitted from all shipping containers of protected cargo. However, all other identification markings required by this standard shall be applied to shipping containers of protected cargo. Markings required to be placed on the outside of shipping containers are stock number, item description, lot number, hazardous materials PSNs and identification numbers, and precautionary markings and labels prescribed by Department of Transportation (DOT) regulations and applicable international documents. When identification markings have been omitted from a shipping container of protected cargo, the packing list shall be placed inside the container. For multiple container shipments of protected cargo, the packing list shall be placed inside the No. 1 container. For information on the bar coding of protected cargo, see 4.5.3.14.

4.2.2.4 Omission of markings on exterior shipping containers of items in the Defense Personnel Support Center (DPSC) Clothing and Textile (C&T) Directorate. The nomenclature, size, and manufacturer's name (when the name identifies the material) shall be omitted from all exterior shipping containers of DPSC C&T items, regardless of the mode of shipment. If the manufacturer's name does not identify the material as being clothing, it may remain. NSNs shall be shown on all shipping containers of C&T items. For multiple container shipments of C&T items, the packing list shall be placed inside the last container to be loaded for each shipment. The words "PACKING LIST HERE" shall be stenciled, not hand lettered, on the container. For information on the marking of palletized loads and the bar coding of C&T items, see 4.4.7b and 4.5.3.14, respectively.

4.2.3 Exterior container contract data markings (see figure 2). Unless specifically exempted in the procurement contract or order, contract data markings shall include the following minimum information. Additional information may be required in the procurement contract or order. When the corporate name of the contractor requires two or more lines, the name may be abbreviated. When more than one contract is applicable to a multipack, contract data markings are not required on the exterior container but shall be applied to each container in the multipack. Unless specifically required by a military Service or Agency directive, contract data markings are not required on exterior containers when items are repacked for shipment by military installations. As illustrated in figure 2 and in other figures in this standard, contract data markings shall be placed below the identification markings on the various exterior containers and unpacked items. Refer to figure 2 for the approximate placement of contract data markings.

Source: https://assist.dla.mil -- Downloaded: 2016-10-21T11:29Z
Check the source to verify that this is the current version before use.

a. Contract or purchase order number and delivery order or call number, modification for change order number (when used), and lot number (when used).

b. Name and address of the contractor (including nine-digit zip code). The street address is optional. When supplies are shipped from a subcontractor, only the name and address of the company awarded the contract shall be used.

c. For DPSC C&T items only, the use of labels is prohibited. Except for the separate marking of the pallet load and as noted in 4.2.2.4, the following additional markings are required: shipment number; lot number; name, address, and zip code of the manufacturer; and the container number. The container number shall be consecutively numbered from each shipping point for the duration of the contract.

NOTE: When lot numbering in accordance with MIL-STD-1168 is specified, the contract number and contractor's name and address (see 4.2.3a and b) are not required to be marked.

4.3 Address markings. Contractor- or vendor-originated address markings and military address markings shall be accomplished and applied as specified in 4.3.1 and 4.3.2, respectively. The preferred location for address markings on various exterior shipping containers is shown in the figures in this section. Exact placement of the address markings may vary slightly from those shown.

4.3.1 Contractor- or vendor-originated address markings (see figures 3 and 4). A contractor or vendor making a shipment may apply address markings by silk-screening, stenciling, tags, or alternate labels (other than a DD Form 1387 (Military Shipment Label)), provided the procurement costs are not increased and the markings conform to the requirements of this standard. While it is preferred that contractors and vendors use the latest edition of the DD Form 1387 when shipping cargo to a continental United States (CONUS) (domestic) location, mandatory use of the label is not yet required. Fleet Post Office (FPO) and Air Post Office (APO) addresses also do not, as yet, require usage of the DD Form 1387 address label. In addition, contractors and vendors are not yet required to bar code the DD Form 1387 for deliveries to CONUS locations. However, when contractor- or vendor-originated shipments are destined for outside continental United States (OCONUS) overseas locations and are shipped through the Defense Transportation System (DTS) (transshipment), they shall comply with the address marking instructions in DOD 4500.32-R, volume I, which require the address markings to be placed on a bar coded DD Form 1387. For these shipments, bar code labels may be affixed to the DD Form 1387 as an alternative to direct bar coding of the DD Form 1387 (see 4.3.2.2). Destinations such as Hawaii, Alaska, Puerto Rico, Canada, and Mexico are considered OCONUS sites and require

Source: https://assist.dla.mil -- Downloaded: 2016-10-21T11:29Z
Check the source to verify that this is the current version before use.

bar coded DD Form 1387 address labels. The military shipment label shall be completed as specified in 4.3.2 and 4.3.2.1. The domestic shipment address for contractor- or vendor-originated shipments shall contain the following minimum information in the order listed. Any additional data required by the procurement contract shall be applied below the piece number and total pieces.

a. Control Number or Reference Number: As a minimum, the Transportation Control Number (TCN) shall be provided as the single standard shipment identification number. The contract number, purchase order number, or Government Bill of Lading number may also be provided.

b. From: Name and address of consignor (DOD activity address code (DODAAC) and in-the-clear address, if applicable).

c. To: Name and address of the consignee (DODAAC and in-the-clear address, if applicable).

d. Project Code and required delivery date, when required.

e. Weight and Cube.

f. Piece Number and Total Pieces.

g. Additional data, when required.

```
TCN W6262Q50980209XXX
B/L #C2718722

FM  NOVO METAL CO
    MOSCOW, PA  18444-3297

TO  TRANSPORTATION OFFICER
    W25G1W  TOBYHANNA ARMY DEPOT
    ATTN:  AMXLS-ST
    TOBYHANNA, PA  18466-5096

PROJECT CODE:  ABC

RDD:  300

WT  70  CU  5.3

BOX 1 OF 2
```

FIGURE 3. Example of a domestic address label for a contractor- or vendor-originated shipment.

Source: https://assist.dla.mil -- Downloaded: 2016-10-21T11:29Z
Check the source to verify that this is the current version before use.

MILITARY SHIPMENT LABEL DD FORM 1387, NOV 86

1. TRANSPORTATION CONTROL NUMBER
S150A12420110XXX

2. POSTAGE DATA

3. FROM E12345 NONEXISTANT CO
1234 NOWHERE STREET
FORT WAYNE, IN 46808
OFFICIAL BUSINESS. PENALTY FOR PRIVATE USE $300.

4. TYPE SERVICE
5

5. SHIP TO / POE
FB4418
CHS TRANSPORTATION OFFICER
CHARLESTON AIR FORCE BASE
CHARLESTON, SC 29484

6. TRANSP. PRIORITY
2

7. POD RMS RAMSTEIN AB GERMANY

8. PROJECT
000

9. ULTIMATE CONSIGNEE OR MARK FOR
S1501A
1242 011OXXX
BASE SUPPLY
COMMANDING OFFICER
SAUDI ARABIA

10. WT THIS PC
65

11. RDD
-000

12. CU THIS PC
7.9

13. CHARGES

14. DATE SHIPPED
07 MAY 92

15. FMS CASE

16. PIECE NO.
1

17. TOTAL PIECES
1

FORM APPROVED. OMB NO. 0704-0188

FIGURE 4. Overseas address markings for a contractor- or vendor-originated shipment using the Military Shipment Label.

4.3.2 Military address markings (see figure 5). The DD Form 1387 shall be used as the address marking on all shipments of DOD cargo that are originated by DOD shipping activities. It shall be completed as specified herein and in DOD 4500.32-R and shall

Source: https://assist.dla.mil -- Downloaded: 2016-10-21T11:29Z
Check the source to verify that this is the current version before use.

be prepared by automated or manual means (typewriter). Address labels prepared by automated means must be readable by humans and electronic devices. Address labels prepared manually must be readable by employees who are responsible for the movement of cargo. Transportation priority (TP) 1, 2, or 3 shall be identified by a machine-printed, stenciled, stamped, hand-printed, or stick-on numeral placed in the TP block of the DD Form 1387. Minimum height of the TP numeral shall be three-fourths of an inch. When an automatic marking system is used, the applicable TP (1, 2, or 3) shall be identified by preprinting the TP numeral (printed with the same color ink as the other data on the label). Bar coded entries on the DD Form 1387 shall be as specified in 4.3.2.2. Hand printing is not authorized on the DD Form 1387 except for blocks 6, 10, 12, 13, 14, 16 and 17. If hand-printed entries are not readable by the receiving activity, a report of discrepancy (ROD) should be prepared. When a DD Form 1387 interferes with or obscures other required markings on a shipping container, the label shall be attached to a paper shipping tag (NSN 8135-01-256-1109) conforming to A-A-900 (see figure 5). The tag is large enough (8" long by 7 1/2" wide) to accommodate the label without folding. Separate tags shall be used for identification and address markings.

4.3.2.1 Format of the DD Form 1387 (see figure 5). The format of the DD Form 1387 and the instructions for its completion are specified below and in DOD 4500.32-R, volume I.

a. For shipments other than mail, the address label shall be completed as follows:

(1) TCN: Enter the 17-character (alphanumeric) TCN, bar coded and in-the-clear. For consolidated shipments, a lead TCN must be placed in this block.

(2) Postage Data: Leave blank.

(3) From: Enter DODAAC and in-the-clear address of the shipping activity. (See DOD 4000.25-6-M)

(4) Type Service: Enter Air Express, Blue Label, Overnight Delivery, etc., as applicable. If none, leave blank.

(5) Ship to/Port of Embarkation (POE): Enter the three digit air/water port code and the in-the-clear port address.

(6) Transportation Priority: Enter the applicable TP.

Source: https://assist.dla.mil -- Downloaded: 2016-10-21T11:29Z
Check the source to verify that this is the current version before use.

(7) Port of Debarkation (POD): Enter three-digit POD port designator from DOD 4500.32-R, if appropriate.

(8) Project: Enter project code, if applicable.

(9) Ultimate Consignee/Mark For: Enter the consignee's DODAAC, bar coded and in-the-clear, and the complete mailing address of the consignee.

(10) Weight (this piece): Enter actual gross weight.

(11) Required Delivery Date (RDD): Enter the RDD (day of the year such as 087 or 198), if appropriate. If the RDD is not appropriate, enter "000."

(12) CUBE (this piece): Enter cube.

(13) Charges: Enter the CONUS inland freight charge on the label of the number one piece of the shipment unit (entry is mandatory for FMS shipments).

(14) Date Shipped: Enter the four-digit date (day of the year) (e.g., 0181) or the in-the-clear date (e.g., 29 Jun 92).

(15) FMS Case Number: Enter as appropriate.

(16) Piece Number: Enter bar coded and in-the-clear.

(17) Total pieces: Enter total pieces in shipment unit.

b. For mail shipments, the address label shall be completed as follows:

(1) TCN: Enter the 17-character (alphanumeric) TCN, bar coded and in-the-clear.

(2) Postage Data: Use one of the following:

(a) For metered mail, leave blank and attach the stick-on metered postage values to or near this block.

(b) For permit imprint mail, enter the appropriate service/agency mail authorization.

Source: https://assist.dla.mil -- Downloaded: 2016-10-21T11:29Z
Check the source to verify that this is the current version before use.

Example: First Class Mail
Postage and Fees Paid
Defense Logistics Agency
Permit No. G-53

(3) From: Enter the in-the-clear address of the shipping activity, including the zip code. The words "OFFICIAL BUSINESS" must be printed on the bottom line of this block.

(4) Type Service: Enter Express Mail, Military Ordinary Mail, First Class Priority Mail, etc., as applicable.

(5) Ship to/POE: For CONUS mail, enter the complete address of the consignee, including the nine-digit zip code. For mail to overseas locations, enter the postal concentration at the DTS port or MILSTAMP Air/Water Port identifier (APO/FPO).

(6) Transportation Priority: Enter the applicable TP.

(7) POD: Leave blank.

(8) Project: Enter project code, if applicable.

(9) Ultimate Consignee/Mark for: Enter the DODAAC of the consignee, bar coded and in-the-clear. For CONUS shipments, no other data is required to be entered. For OCONUS shipments, add the detailed address.

(10) Weight (this piece): Enter actual gross weight.

(11) RDD: Enter RDD, if appropriate.

(12) CUBE (this piece): Enter cube.

(13) Charges: Leave blank.

(14) Date Shipped: Enter the four-digit date (day of the year) (e.g., 0181) or the in-the-clear date (e.g., 29 Jun 92).

(15) FMS Case Number: Enter, if applicable.

(16) Piece number: Enter bar coded and in-the-clear.

(17) Total Pieces: Enter total pieces in shipment unit.

Source: https://assist.dla.mil -- Downloaded: 2016-10-21T11:29Z
Check the source to verify that this is the current version before use.

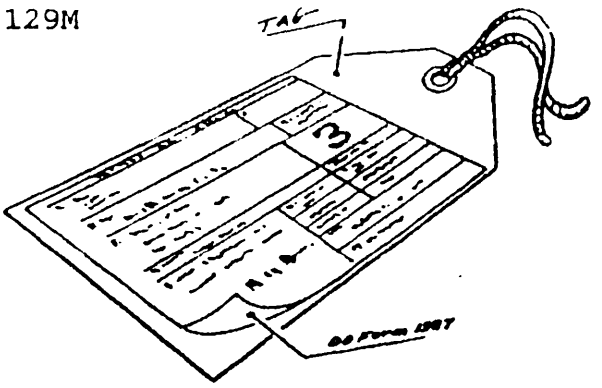

MILITARY SHIPMENT LABEL		Form Approved. OMB No. 0704-0188
1. TRANSPORTATION CONTROL NUMBER		2. POSTAGE DATA
3. FROM		4. TYPE SERVICE
5. SHIP TO/POE		6. TRANS PRIORITY
7. POD		8. PROJECT
9. ULTIMATE CONSIGNEE OR MARK FOR	10. WT. (lbs pieces)	11. ROD
	12. CUBE (lbs pieces)	13. CHARGES
	14. DATE SHIPPED	15. FMS CASE NUMBER
	16. PIECE NUMBER	
	17. TOTAL PIECES	

DD Form 1387, NOV 86 Previous editions are obsolete GPO : 1987 O - 171-241

FIGURE 5. Military address markings applied to a Military Shipment Label for a DOD-originated shipment. The label may be attached to a paper shipping tag.

Source: https://assist.dla.mil -- Downloaded: 2016-10-21T11:29Z
Check the source to verify that this is the current version before use.

Example: First Class Mail
Postage and Fees Paid
Defense Logistics Agency
Permit No. G-53

(3) From: Enter the in-the-clear address of the shipping activity, including the zip code. The words "OFFICIAL BUSINESS" must be printed on the bottom line of this block.

(4) Type Service: Enter Express Mail, Military Ordinary Mail, First Class Priority Mail, etc., as applicable.

(5) Ship to/POE: For CONUS mail, enter the complete address of the consignee, including the nine-digit zip code. For mail to overseas locations, enter the postal concentration at the DTS port or MILSTAMP Air/Water Port identifier (APO/FPO).

(6) Transportation Priority: Enter the applicable TP.

(7) POD: Leave blank.

(8) Project: Enter project code, if applicable.

(9) Ultimate Consignee/Mark for: Enter the DODAAC of the consignee, bar coded and in-the-clear. For CONUS shipments, no other data is required to be entered. For OCONUS shipments, add the detailed address.

(10) Weight (this piece): Enter actual gross weight.

(11) RDD: Enter RDD, if appropriate.

(12) CUBE (this piece): Enter cube.

(13) Charges: Leave blank.

(14) Date Shipped: Enter the four-digit date (day of the year) (e.g., 0181) or the in-the-clear date (e.g., 29 Jun 92).

(15) FMS Case Number: Enter, if applicable.

(16) Piece number: Enter bar coded and in-the-clear.

(17) Total Pieces: Enter total pieces in shipment unit.

Source: https://assist.dla.mil -- Downloaded: 2016-10-21T11:29Z
Check the source to verify that this is the current version before use.

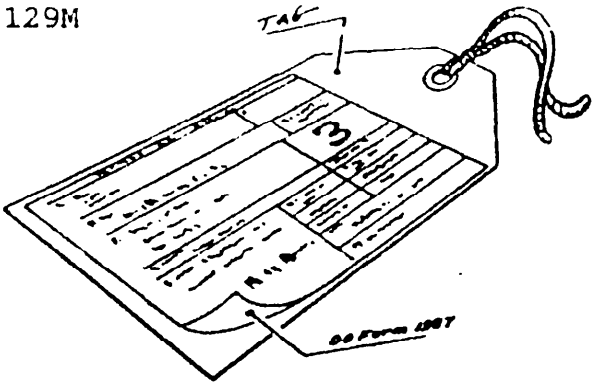

MILITARY SHIPMENT LABEL		Form Approved. OMB No. 0704-0188
1. TRANSPORTATION CONTROL NUMBER		2. POSTAGE DATA
3. FROM		4. TYPE SERVICE
5. SHIP TO/POE		6. TRANS PRIORITY
7. POD		8. PROJECT
9. ULTIMATE CONSIGNEE OR MARK FOR	10 WT. (lbs pounds)	11. RDD
	12.CUBE (lbs pounds)	13. CHARGES
	14.DATE SHIPPED	15. FMS CASE NUMBER
	16. PIECE NUMBER	
	17. TOTAL PIECES	

DD Form 1387, NOV 86 *Previous editions are obsolete* GPO : 1987 O - 171-241

FIGURE 5. Military address markings applied to a Military Shipment Label for a DOD-originated shipment. The label may be attached to a paper shipping tag.

Source: https://assist.dla.mil -- Downloaded: 2016-10-21T11:29Z
Check the source to verify that this is the current version before use.

4.3.2.2 Data to be bar coded on the DD Form 1387 (see figure 6). Using either the preprinted or generated form, those DOD sites that have the capability shall bar code the following data on the DD Form 1387 in accordance with DOD 4500.32-R. This is in addition to the required human-readable data. Contractor- or vendor-originated shipments, destined for OCONUS locations, that enter the DTS, shall also have the following data bar coded on the DD Form 1387.

a. TCN in block 1 (17 characters).
b. Ultimate Consignee (DODAAC) in block 9 (6 characters).
c. Piece Number in block 16 (4 characters).

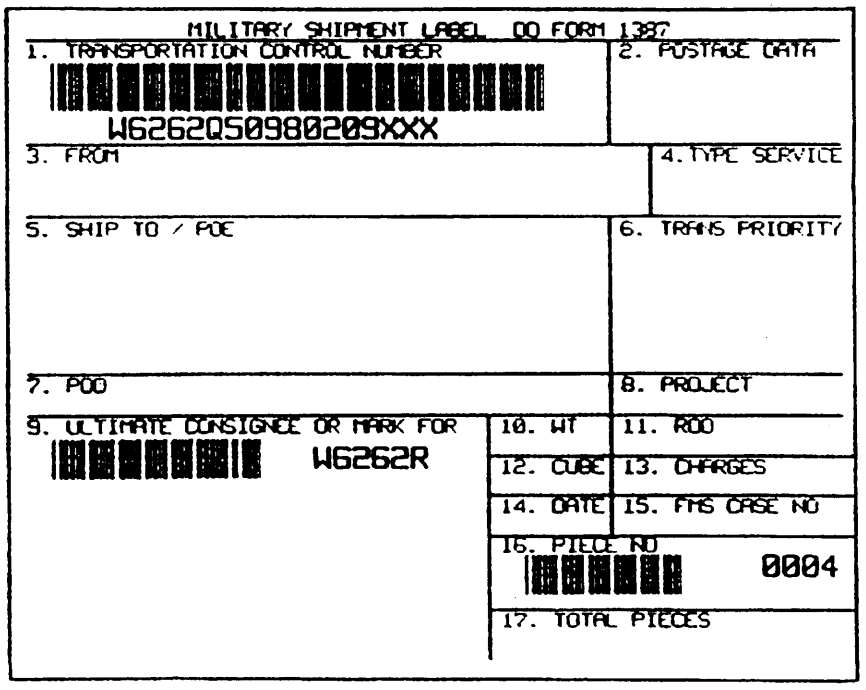

FIGURE 6. Sample of a bar coded Military Shipment Label.

4.3.2.2.1 Human-readable interpretation (HRI) (see figure 6). The HRI of the bar coded DODAAC and piece number shall appear below the bar code or in-line with the bar code. When in-line, a 0.25 inch quiet zone is required between the bar code and the HRI.

4.3.2.3 Size of the DD Form 1387. For those sites having the capability to generate the DD Form 1387 as well as the data, the form may be reduced in size but shall not be any smaller than 4.0 inches in height by 5.0 inches in width (101.6 by 127.0mm) or 5.0 inches in height by 4.0 inches in width (127.0 by 101.6mm). The basic format shall remain the same. The labels and bar codes in figures 5 and 6 have been reduced in size for ease in publication.

Source: https://assist.dla.mil -- Downloaded: 2016-10-21T11:29Z
Check the source to verify that this is the current version before use.

4.3.3 Affixing the contractor/vendor or military address label to the shipping container. When the surface of the shipping container or the surface of a material such as pipe, steel, or wood does not lend itself to direct application of the address label, the label shall be attached to a paper shipping tag (see 5.1.3) or a marking board or marking panel (see 5.1.9).

4.3.4 DOD shipments sent through the U.S. Postal Service. Shipments originated by DOD activities and sent through the U.S. Postal Service must have the words "OFFICIAL BUSINESS" printed on the bottom line of the "FROM" block of the DD Form 1387. These words, which are required by the Domestic Mail Manual, may be overprinted, typewritten, or applied by rubber stamp, with no exceptions. All DOD activities must employ the direct accountability methods (permit imprint or meter) when using the U.S. Postal Service. The appropriate postage mail authorization shall be applied in the "Postage Data" block.

4.3.5 Direct mail pouch shipment. If a U.S. Postal Service mail pouch is used as the outer container for the mailing of more than one interior container as a direct pouch shipment to the addressee, each interior container in the pouch shall have a DD Form 1387 attached.

4.3.6 Full carload and full truckload shipments. Full carload and full truckload shipments moving from a single consignor to a single consignee require at least one completed address label attached to the container or palletized load located closest to the door. Additional address labels may be placed on other containers or palletized unit loads in the shipment. A domestic address label (DD Form 1387 or approved substitute) shall also be placed on all shipping containers, palletized unit loads, and unpacked items for less than carload and less than truckload lots.

4.3.7 Regional Freight Consolidation Center shipments. For vendor-originated shipments that are destined for delivery to a materiel consolidation point (MCP), the shipment shall be addressed to the designated MCP, with the ultimate receiving depot listed as the "MARK FOR" address.

4.4 Placement of identification, contract data, and address markings on exterior shipping containers (see figures 7 through 18). Unless otherwise specified in the procurement contract or order, the required identification, contract data, and address markings shall be placed on exterior shipping containers as shown. The exact location of these markings may vary slightly from those illustrated. Specific requirements for the placement of these markings on various containers are discussed in 4.4.1 through 4.4.13. If a container is too small to accommodate the address markings on the identification-marked side, the address markings/

Source: https://assist.dla.mil -- Downloaded: 2016-10-21T11:29Z
Check the source to verify that this is the current version before use.

label shall be applied on the opposite side or attached to a paper shipping tag (see 5.1.3) or marking board/panel (see 5.1.9). The required markings shall not be obscured by cleats, strapping, or closure tape. Unless otherwise specified in the procurement contract or order or when required by the carrier, such as parcel post, one end and the top and bottom of every container shall be free of markings. Marking materials used shall meet the requirements specified in section 5. Unless otherwise specified by the cognizant activity, the size of the lettering on exterior containers shall be proportionate with the overall size of the exterior container or shall be proportionate to the available marking space. For bar code marking requirements, see 4.5.1 through 4.5.3.17.2.

4.4.1 Boxes and crates (see figure 7). All sizes of boxes and crates shall have identification markings applied as specified in 4.2.2. In addition, boxes and crates 10 cubic feet and over shall have identification markings placed on the end of the container that is to the left of the identification-marked side. Placement of identification markings on the end of boxes and crates under 10 cubic feet is optional. An additional address label may be placed on the identification-marked end for styles which, because of their configuration, allow access by materials handling equipment only to the end of the container. Regardless of size, identification and contract data markings shall be stenciled or printed directly on the container or applied by use of a stenciled or preprinted label. When no other adequate marking surface is available, cleats may be used as part of the marking surface. When the exterior surface is not suitable for direct application of markings, a marking board/panel shall be used (see 5.1.9).

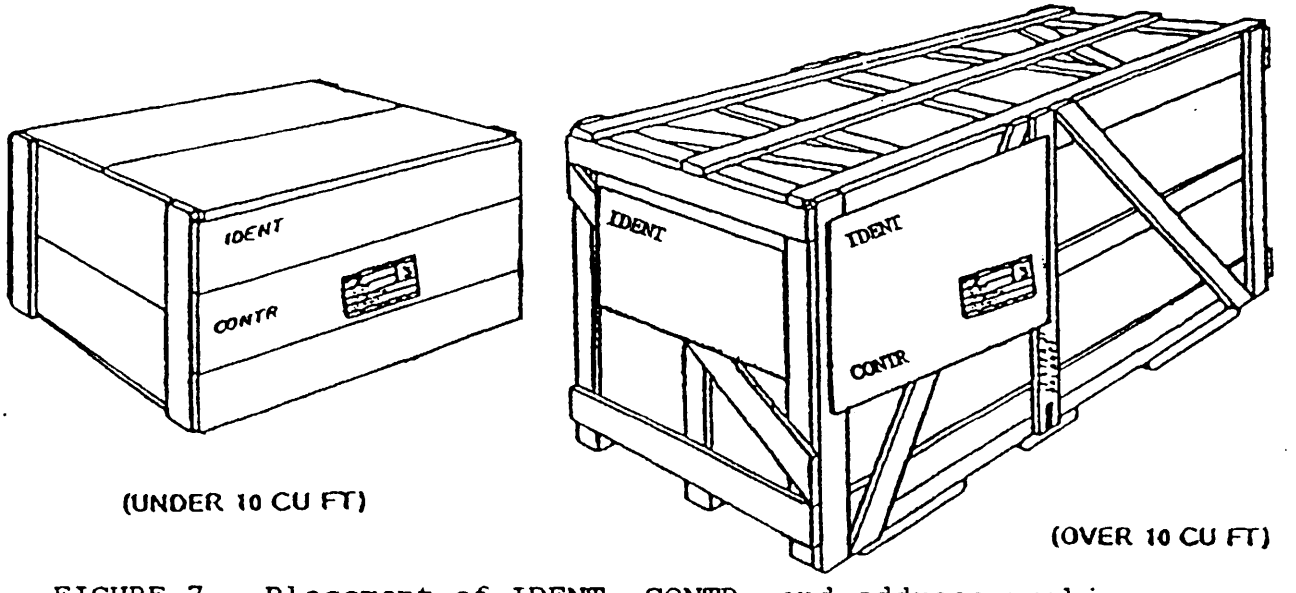

FIGURE 7. Placement of IDENT, CONTR, and address markings on boxes and crates. For bar code markings, see figures 24 and 25.

Source: https://assist.dla.mil -- Downloaded: 2016-10-21T11:29Z
Check the source to verify that this is the current version before use.

4.4.2 Bales and cloth-covered bundles (see figure 8). The identification markings on bales shall be stenciled on the upper two-thirds of the side of the bale having the largest marking surface area. Contract data markings shall be placed below the identification markings. Bales with a presewn end and a wire-tied ear on the opposite end shall have the NSN, quantity, and UI applied on the presewn end. When both ends have wire-tied ears, no identification markings shall be applied on the ends. On cloth-covered bundles, identification markings shall be stenciled on the upper two-thirds of the side of the bundle as close to the left side as possible, with contract data markings placed below the identification markings. When direct stenciling is used, there is no need to coat the cloth, provided the markings do not become smeared or illegible because of any absorption into the cloth. To ensure that the marking is both permanent and readable, the cloth bundle may be given a smooth coat of sand-colored lacquer, enamel, or paint over the area to be marked before the marking is applied. When stenciling is not appropriate for bales or cloth-covered bundles, preprinted labels or tags shall be used. Address labels for bales and bundles shall be applied to the lower two-thirds of the identification-marked side or to the wire-tied ear with a tag.

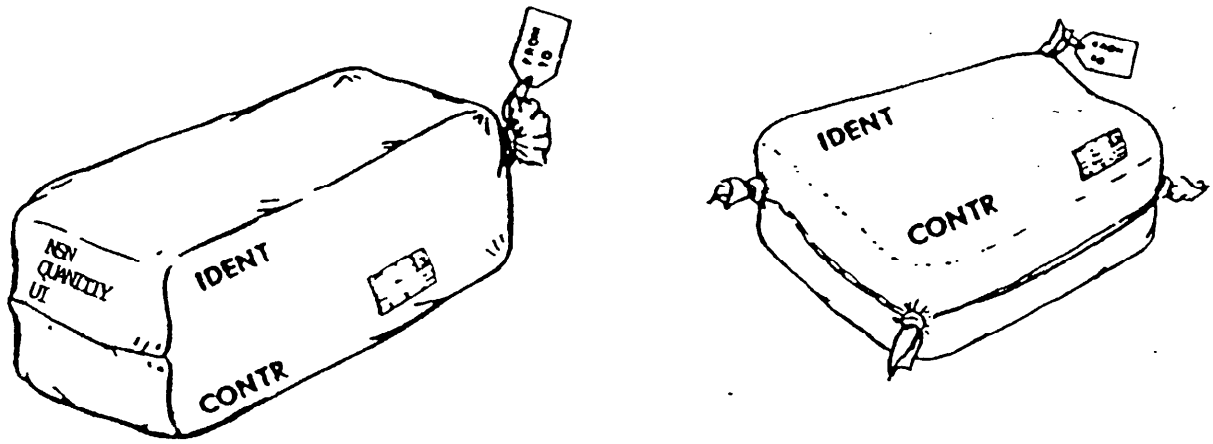

FIGURE 8. Placement of IDENT, CONTR, and address markings on bales and cloth-covered bundles. For bar code markings, see figure 28.

4.4.3 Paper shipping sacks, bags, and textile/laminated textile bags (see figure 9). Markings shall be printed or stenciled on the side of the sack or bag that does not bear the certificate of compliance of the sack manufacturer. Contract data markings shall be placed a minimum of three lines below the identification markings. Commercially packed commodities shall have the required markings stenciled and centered on one face of the sack or bag.

Source: https://assist.dla.mil -- Downloaded: 2016-10-21T11:29Z
Check the source to verify that this is the current version before use.

When the printing area is too small, spacing of the printing may be altered proportionately and lines may be consolidated. If the stenciled markings are not legible, they shall be machine printed on a tag or label. If a bag is closed by stitching, an identification tag (not an address label) may be fastened to the bag by stitching at the time of closure. If the top of a bag has ears, the appropriate tag shall be affixed to one of the ears. Address markings shall be placed on a label or tag. When a label is used, it shall be applied between the identification and contract data markings. If the bag is closed by stitching, a tag may be fastened to the bag by stitching when closure is made. If the top of the bag has ears, the tag shall be affixed to one of the ears.

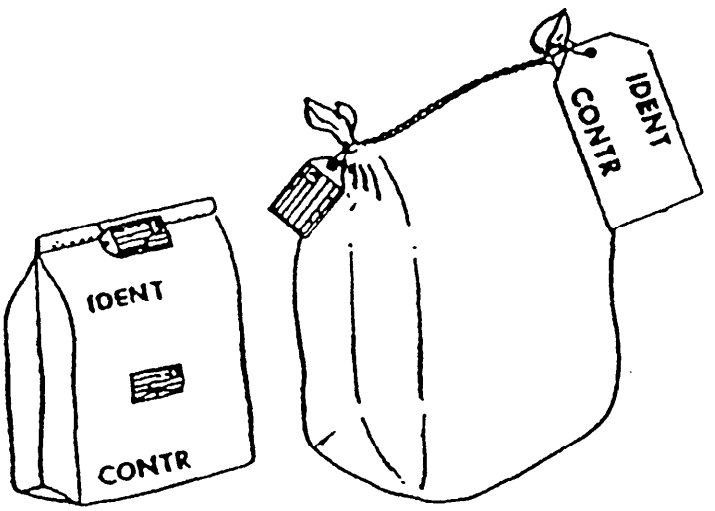

FIGURE 9. Placement of IDENT, CONTR, and address markings on sacks and bags. For bar markings, see figure 28.

4.4.4 Barrels, drums, and other cylindrical containers (including empty containers) (see figure 10). Identification and contract data markings shall be stenciled or preprinted on the upper one-third of filled barrels, pails, kegs, drums, and reusable metal containers. However, when space is not available, contract markings shall be shown diametrically opposite the identification markings. In addition to the required markings on 50- and 55-gallon drums or barrels from which the heads are not removed, identification data (less weight and cube), contract data, and shelf-life markings, when required, shall also be shown on the head. Forest-green containers shall be marked with yellow or white lettering. Although the preferred methods of application are stenciling and preprinting, labels or tags may be used when a container is too small for either method. However, unless otherwise approved by the cognizant activity, labels or tags shall not be used for identification and contract data markings on metal containers, unless the containers are too small to accommodate the

Source: https://assist.dla.mil -- Downloaded: 2016-10-21T11:29Z
Check the source to verify that this is the current version before use.

stenciled or preprinted markings. Also, if labels are used for these markings, only pressure-sensitive labels shall be used on cylindrical containers and metal drums. Markings should be avoided in the space 6 inches above or below the center line of the body sidewall for barrels not swagged with rolling hoops. On empty barrels, drums, and cylindrical containers, identification and contract data markings shall be applied on the top and on the upper one-third of the side by attaching labels or tags. The preferred location for the address label is on the middle one-third of the container. However, if space is not available in this location, the address label shall be placed in a conspicuous location in close proximity to the identification markings. If space is not available on the surface of the container for the address label, the label shall be placed on a shipping tag.

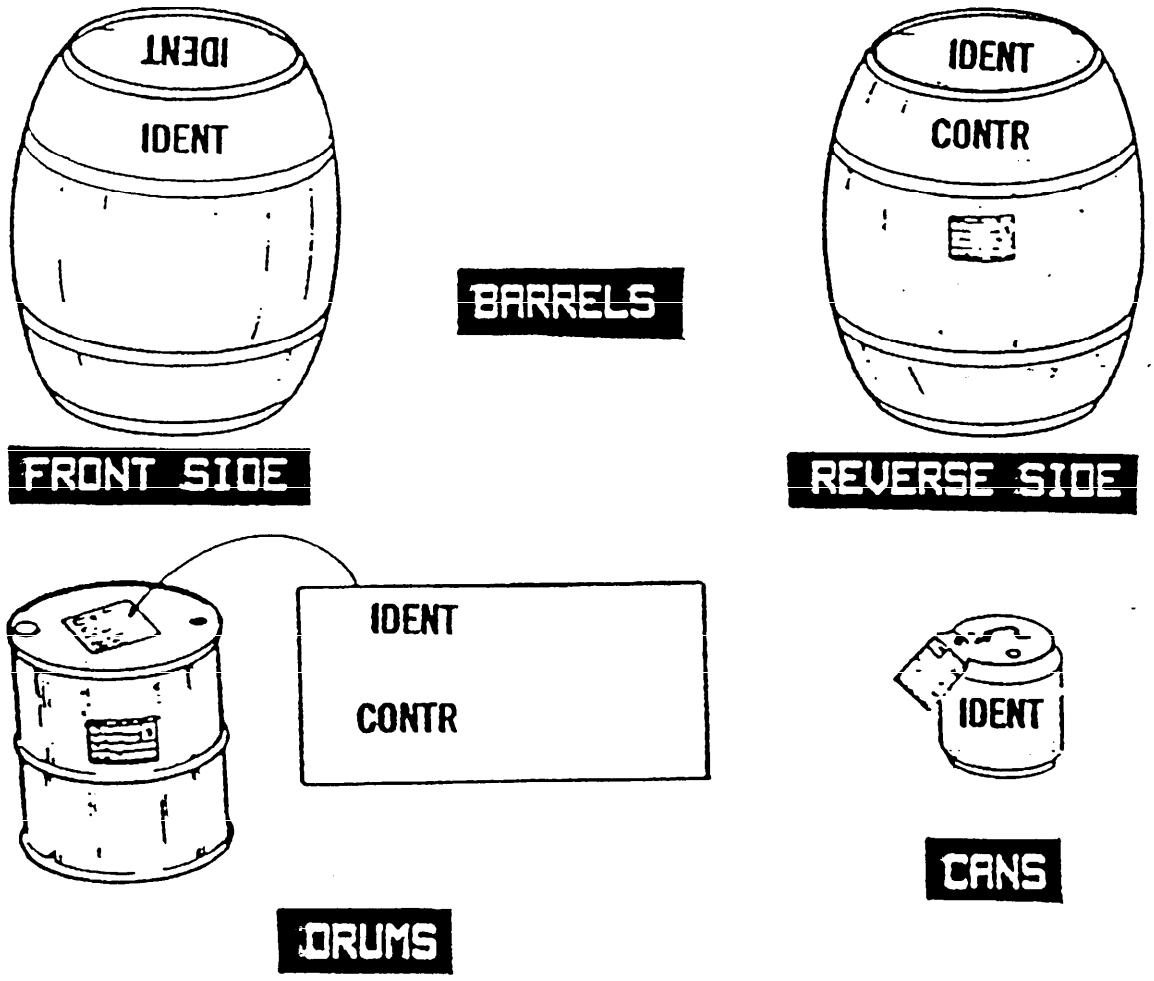

FIGURE 10. Placement of IDENT, CONTR, and address markings on barrels, drums, and other cylindrical containers. For bar code markings, see figure 29.

Source: https://assist.dla.mil -- Downloaded: 2016-10-21T11:29Z
Check the source to verify that this is the current version before use.

4.4.5 Miscellaneous articles and unpacked items such as spools, reels, rods, coils of wire and cable, and paper- and cloth-wrapped rolls (see figure 11). Identification and contract data markings shall be applied on two tags securely attached to items such as rods and bars. One of the tags shall be bound to the item with burlap or other suitable covering, with each end of the cover securely fastened. The other tag shall be securely attached to the item with a wire or twine (see 5.1.3). On reels or spools of cable and wire, identification and contract data markings shall be stenciled on the side of the reel or spool. When this area does not permit stenciling, markings may be applied by using a label. On coils of wire, identification and contract data markings shall be applied on two tags securely attached to the coil. On paper- and cloth-wrapped rolls, identification and contract data markings shall be applied by stenciling, printing, or labeling. Prior to stenciling cloth-wrapped rolls, the marking area shall be given a smooth coating of sand-colored lacquer, enamel, or paint. One end of wrapped rolls shall contain NSN, quantity, and UI markings. Address markings shall be applied to these types of miscellaneous articles and unpacked items by using labels or tags as shown.

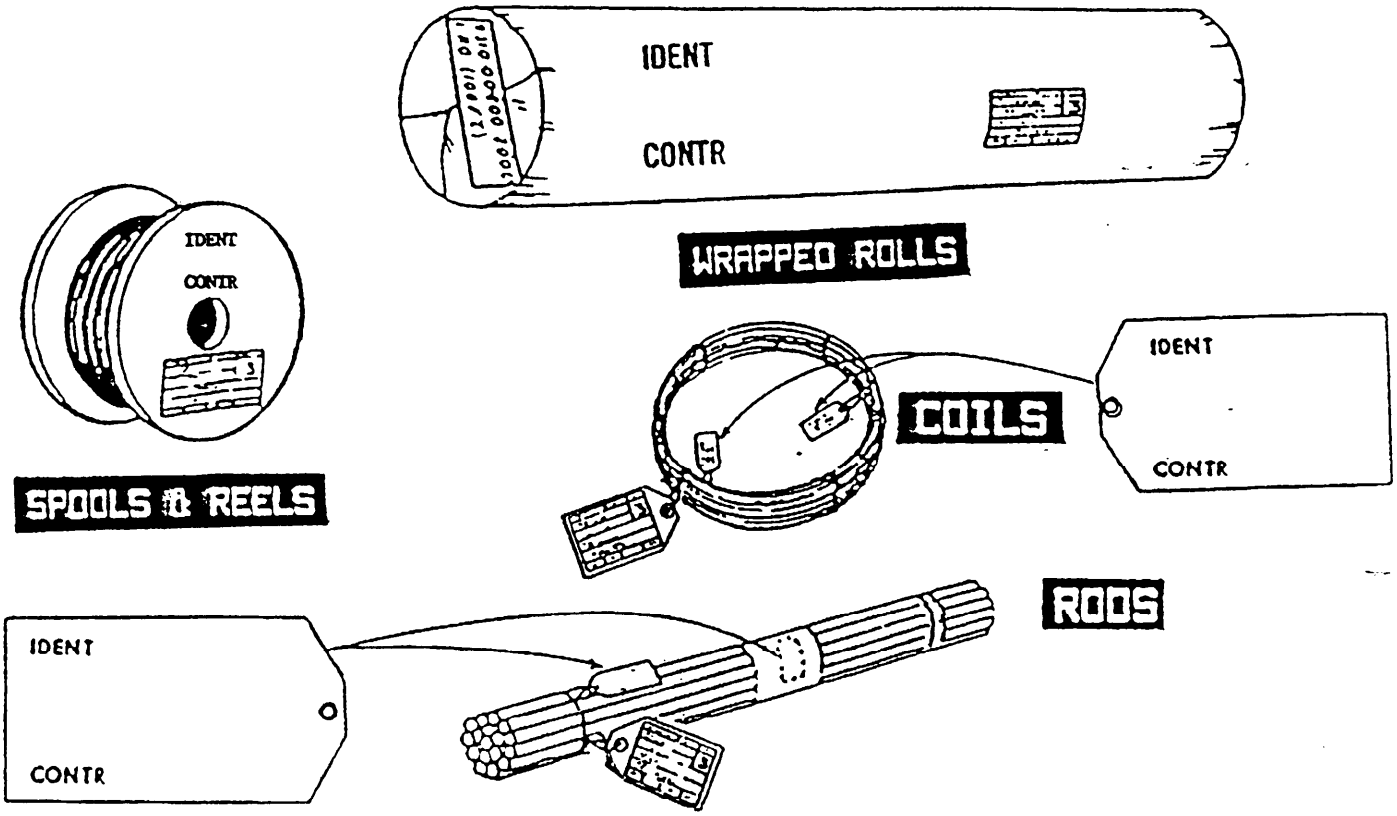

FIGURE 11. Placement of IDENT, CONTR, and address markings on miscellaneous articles and unpacked items. For bar code markings, see figures 28 and 30.

Source: https://assist.dla.mil -- Downloaded: 2016-10-21T11:29Z
Check the source to verify that this is the current version before use.

4.4.6 Unpacked major equipment (except unpacked vehicles) (see figure 12). Identification, contract data, and address markings shall be either stenciled on a marking board/panel (see 5.1.9) applied to the most suitable location on the item, or they shall be printed on a label attached directly on the equipment's surface with PPP-T-60, type III, class 2 tape. The tape shall be placed over the label and shall extend a minimum of half an inch from its edges. For unpacked vehicle marking requirements, see 4.4.9.

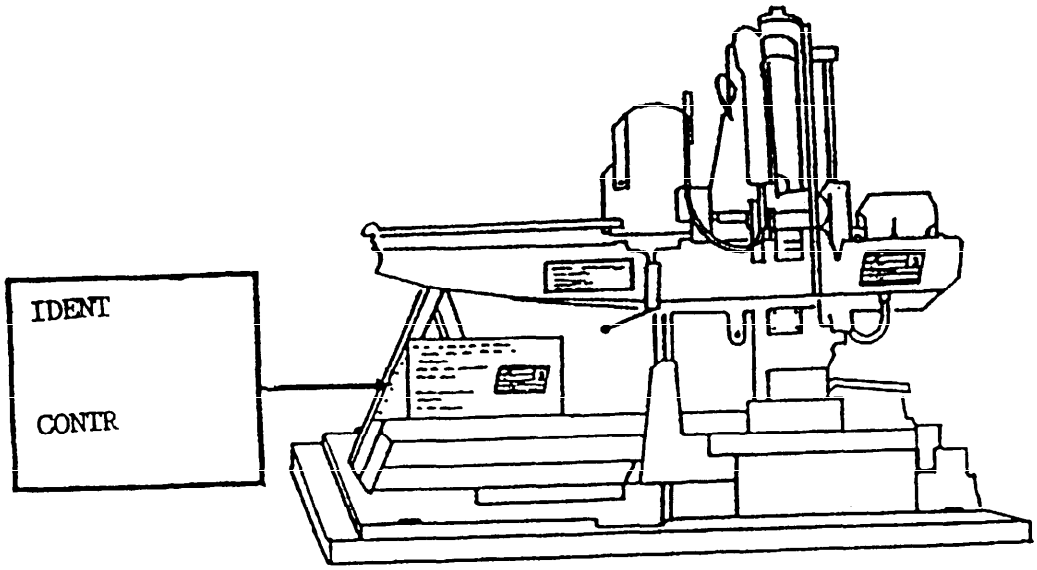

FIGURE 12. Placement of IDENT, CONTR, and address markings on unpacked major equipment.

4.4.7 Palletized unit load (see figure 13). When a palletized unit load is formed, the individual containers comprising the unit load shall already be marked with the appropriate identification and contract data information. Unless otherwise specified, unit loads of box-packed items shall have one or more boxes turned to present a blank surface for marking. The palletized unit load shall have the exterior container identification, contract data, and address markings applied as specified herein and as shown in figure 13. For palletized unit loads 10 cubic feet and over, additional identification markings are required on the end of the load to the left of the identification-marked side. When a fiberboard container such as a triple-wall fiberboard box is used for unitizing a load in lieu of palletization, all required markings, including the address markings, may be placed directly on the flat fiberboard surface. Unitized tires shall be stacked on pallets, sidewall to sidewall, to prevent the markings on the individual tires from being seen around the circumference of the load. The gross weight for palletized/containerized unit loads shall include the weight of the pallet or container base. Because palletized loads are often stacked two or three high when shipped or stored, the markings must be large enough to be read from a distance. The size of the lettering (see 5.1.10) should be

Source: https://assist.dla.mil -- Downloaded: 2016-10-21T11:29Z
Check the source to verify that this is the current version before use.

proportionate to the overall size of the unitized load but shall be not less than three-fourths of an inch in height. For information on the marking of palletized unit loads of hazardous materials that are in the DOD stockpile, see 5.4.5.8.

a. Exterior container identification and contract data markings shall be placed on a marking board/panel (see 5.1.9) by using a label or by direct stenciling. Palletized loads with smooth, flat surfaces may have identification markings stenciled directly on two surfaces, with markings extending from one container to another. Contract data markings shall be applied to one surface.

b. Except for DPSC C&T items, palletized loads of container of items having different NSNs shall be marked as multipacks. Palletized loads of DPSC C&T items having different NSNs shall be marked as specified in the contract or order.

c. When a palletized load is covered with stretch-wrap film, pressure-sensitive labels containing the identification, contract data, and address markings may be placed on the outermost layer of wrap on either side of the load in addition to other marking requirements. Variations are authorized based on local operations and capabilities (e.g., a marking board/panel positioned on the pallet before the last layer of wrap is applied).

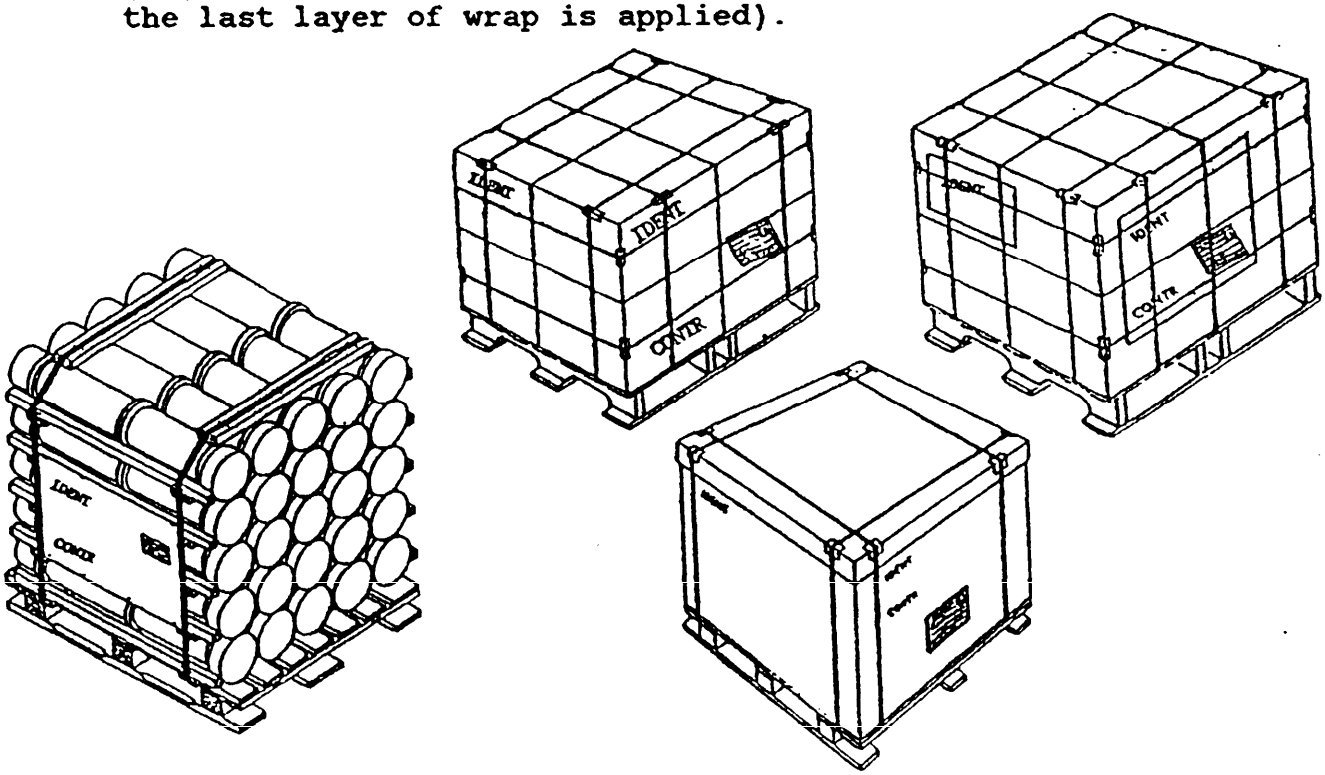

FIGURE 13. Placement of IDENT, CONTR, and address markings on palletized unit loads. For bar code markings, see figure 30.

Source: https://assist.dla.mil -- Downloaded: 2016-10-21T11:29Z
Check the source to verify that this is the current version before use.

4.4.8 Wood products. Identification markings shall consist of the NSN only. If the NSN is not available, the item description as cited in the contract (e.g., door, wood, exterior, etc.) shall be used. Contract data markings shall consist of the contract or purchase order number only and shall be located below the identification data. Identification and contract data markings shall be applied by stenciling the most suitable area. Address markings shall be applied by stenciling, labeling, or tagging. When wood products are shipped on a single conveyance to more than one consignee, address markings shall be provided on each shipment unit.

4.4.8.1 Bundled wood products (see figure 14). When identification and contract data markings are applied by stenciling, they shall be placed directly on the side of the bundle. If the area does not permit stenciling, two or more identification tags may be attached to the bundle. Markings may also be stenciled directly on a marking board/panel (see 5.1.9) or may be applied by using a stenciled label. Address markings, when required, shall be placed below the contract data markings and shall be applied by stenciling or by placing them on a marking board/panel. When a marking board/panel is used, it shall be securely fastened to the bundle. Fiberboard shall not be used as a marking board/panel for bundled wood products. However, fiberboard, wood, or wood-based panel may be used as marking boards/panels for bundled wood pallets. In addition to the NSN and contract number, OCONUS shipments of bundled wood products require address markings. For wrapped bundles of wood products, the address label may be applied directly below the stenciled NSN and contract number. For unwrapped bundles, the address label may be attached to a paper shipping tag secured to the bundled unit. Prior to shipment, a transparent, waterproof laminate shall be placed over the address label.

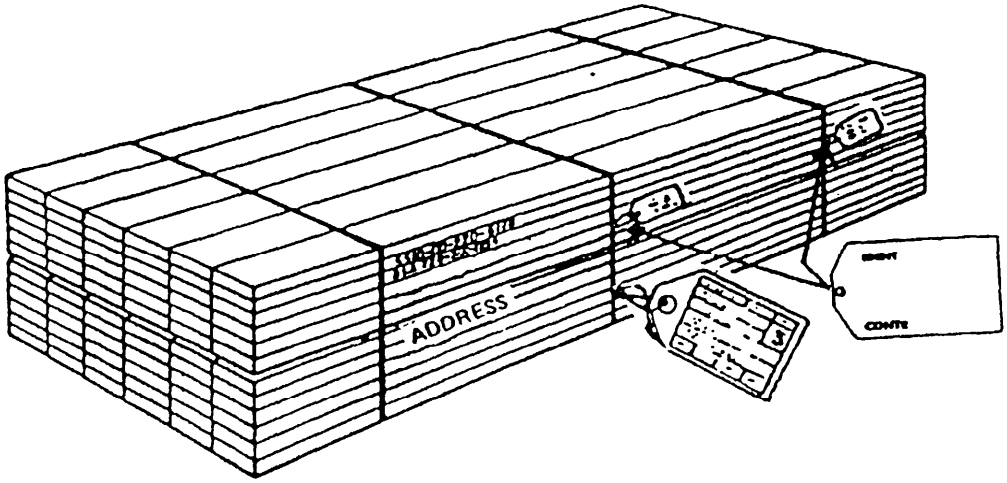

FIGURE 14. Placement of IDENT, CONTR, and address markings on bundled wood products.

Source: https://assist.dla.mil -- Downloaded: 2016-10-21T11:29Z
Check the source to verify that this is the current version before use.

4.4.8.2 Unstrapped (loose) wood products (e.g., piles, poles, etc.) (see figure 15). Identification and contract data markings shall be applied by either stenciling or tagging. If tags are used, they shall be as specified in 5.1.3 and shall be securely attached to the unstrapped (loose) pieces. Metal or plastic tags may be used when authorized by the procuring activity. A minimum of 10 percent of the total pieces in a single shipment shall be marked. Address markings shall be affixed on the side of the load by stenciling or labeling. For material such as poles and ties that is preservative-treated with oil solutions, stenciling shall be accomplished with TT-P-38 aluminum-leaf paint.

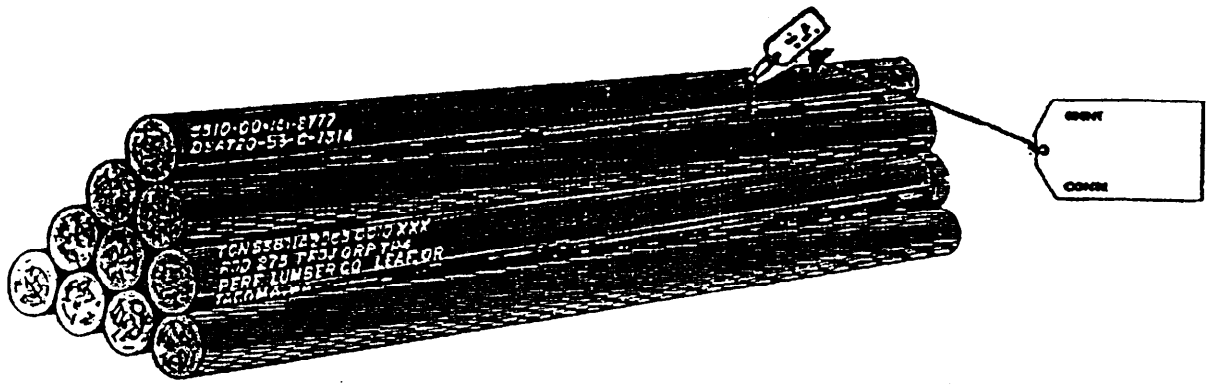

FIGURE 15. Placement of IDENT, CONTR, and address markings on unstrapped (loose) wood products.

4.4.8.3 Miscellaneous wood products in containers (e.g., doors, windows, and moldings) (see figure 16). Identification and contract data markings shall be applied by stenciling or labeling. Address markings shall be applied to the identification-marked side of the container.

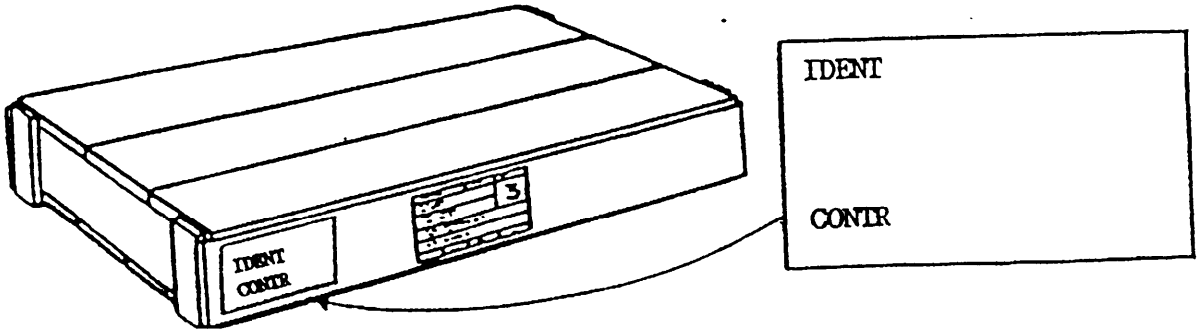

FIGURE 16. Placement of IDENT, CONTR, and address markings on miscellaneous wood products in containers.

Source: https://assist.dla.mil -- Downloaded: 2016-10-21T11:29Z
Check the source to verify that this is the current version before use.

4.4.9 Unpacked vehicles (see figure 17). Identification and contract data markings are not required on unpacked vehicles that are shipped within CONUS. Address, weight, and cube markings are not required on driveaway, truckaway, railaway, or towaway shipments within CONUS. The address marking of vehicles for unit movement overseas shall be in accordance with the applicable regulations of the military department involved. Address markings for CONUS shipments and identification, contract data, and address markings for OCONUS shipments shall be stenciled on a marking board/panel (see 5.1.9) or shall be applied by attaching a preprinted label on the vehicle's surface with PPP-T-60, type III, class 2 tape. When the address label is attached directly to the surface of the vehicle, the label shall be placed either on the rear of the vehicle or on the right side near the rear of the vehicle. When marking boards/panels are used, they shall be secured on the front of the vehicle. When possible, the markings shall be positioned on the vehicle at a height of not more than 6 feet or less than 4 feet. When the use of these locations is not practicable, the best alternate location shall be selected.

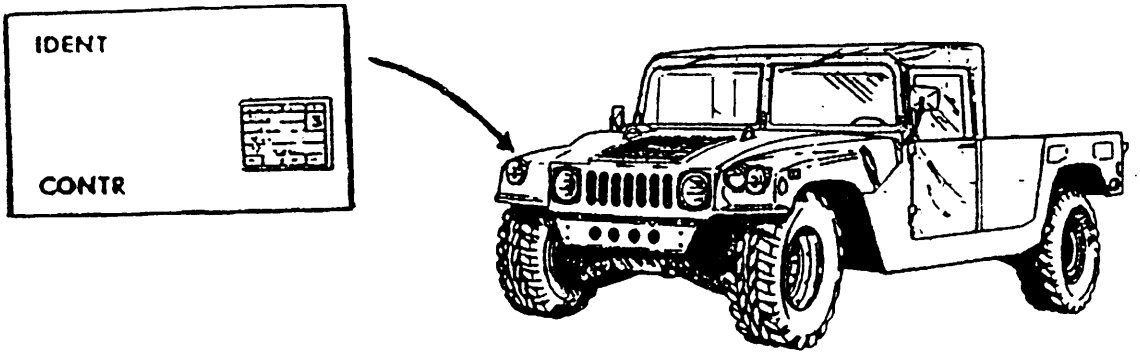

FIGURE 17. Placement of IDENT, CONTR, and address markings on a marking board for an unpacked vehicle.

4.4.10 Commercial- or Government-owned (or -leased) shipping containers (SEAVANs) and military-owned demountable containers (MILVANs) (see figure 18). Exterior container identification and contract data markings shall not be placed on the outside of a SEAVAN/MILVAN. A completed DD Form 1387 address label shall be attached to the seal on the SEAVAN/MILVAN or shall be attached at the rear of each SEAVAN/MILVAN. Shipping containers, palletized unit loads, and unpacked items that are consolidated into a full SEAVAN/MILVAN load by the shipper of origin for delivery as a unit to the ultimate consignee do not require individual address markings. In addition, Consolidation activities who receive shipments for consolidation into SEAVANs or MILVANs are not required to obliterate address labels applied by the shipper of origin.

Source: https://assist.dla.mil -- Downloaded: 2016-10-21T11:29Z
Check the source to verify that this is the current version before use.

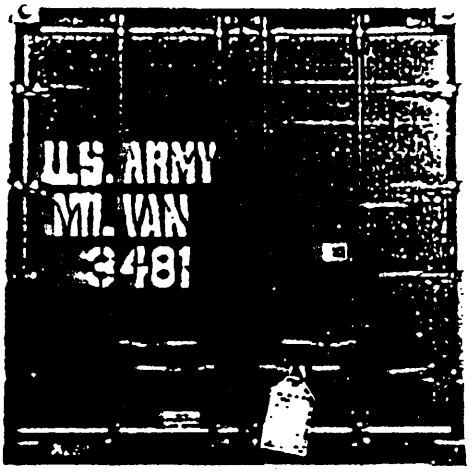

FIGURE 18. Placement of address markings (DD Form 1387 attached to a paper shipping tag) on a SEAVAN or MILVAN.

4.4.11 Tires, loose and unitized. Identification and contract data markings on tires shall be placed on tags affixed to the tires with twine or by labels affixed to the outside sidewall or on the tire tread. When labels are used, they shall conform to MIL-L-61002, Type Optional, Grade A, Style 3-Rubber, Composition (b) (laminated). In addition to the identification markings required in 4.2.2, tires shall be marked with the cure date and inspection or test date. Tires requiring DOT markings molded into the sidewall do not require the cure date to be marked since the last three digits of the DOT markings indicate the week and year of the manufacture of the tire (cure date). Only the inspection/test date is required. Unitized tires shall be marked as specified in 4.4.7.

4.4.12 Tubular products (loose). Identification and contract data markings shall be applied by labels or weather-resistant tags. Plastic or metal tags may be used when authorized by the procuring activity. The address label shall be affixed on the side of the load.

4.4.13 Tubular products (bundles and lifts). Two weather-resistant tags containing the identification and contract data markings shall be applied to 10 percent of the load. Plastic or metal tags may be used when authorized by the procuring activity. Markings may also be stenciled or labeled on a marking board/panel, which shall be attached to the load by PPP-T-60, type III, class 2 tape or metal bands as specified in ASTM D3953. The address label shall be affixed on the side of the load or on the marking board/panel (see 5.1.9).

Source: https://assist.dla.mil -- Downloaded: 2016-10-21T11:29Z
Check the source to verify that this is the current version before use.

4.5 Bar code markings. Unless otherwise specified in the contract or order, bar code markings are required on all containers and loose or unpacked items. Information and illustrations on the content and placement of bar code markings on containers of non-ammunition commodities are in 4.5.1 through 4.5.3.17.2. Bar code requirements for ammunition and explosives are in MIL-STD-129-1, while bar code requirements for DD Forms 1348-1 (DOD Single Line Item Release/Receipt Document) and 1348-1A (Issue Release/Receipt Document) are in 5.3.2.7. Bar code requirements for DD Form 1387 are in 4.3.2.2. When objective evidence can be provided, bar code labels may be accepted with a Certificate of Conformance (COC).

4.5.1 Application of bar code markings on all containers, palletized loads, and loose or unpacked items. The bar code and HRI that are applied shall be the standard DOD symbology as described in MIL-STD-1189. The HRI shall be an exact interpretation of the bar code data and shall not contain any spaces or dashes. The preferred location for the HRI is below the bar code markings, while the optional location is above the bar code markings.

4.5.1.1 Information to be bar coded on unit packs and intermediate containers (see figures 19, 22, and 23). The NSN/NATO stock number shall be bar coded on all unit packs and intermediate containers. The bar coded NSN/NATO stock number shall consist of the basic 13 data characters. Prefixes and suffixes to the stock number, as well as spaces and dashes, shall not be bar coded. In addition, the part number assigned to the item shall not be bar coded. For information on the placement of bar code markings on unit packs and intermediate containers, see 4.5.2.

4.5.1.2 Information to be bar coded on exterior containers (see figures 19 and 26). For all contracts, each exterior shipping container shall be bar coded with the following information: (1) NSN/NATO stock number, (2) contract or order number (including the call number), (3) CAGE code of the company awarded the contract, and (4) the contract line item number (CLIN), when used. The NSN shall be bar coded as specified in 4.5.1.1. The bar coded contract or order number (including call number) shall consist of 13-17 data characters; the CAGE code shall consist of 5 data characters; and the CLIN shall consist of 6 characters, including zero fillers placed to the left of the number (e.g., 0001AB). For bar code configurations, see 4.5.1.4, and for format requirements, see 4.5.1.6. Exterior shipping containers for DPSC clothing and textile items are exempt from the CLIN bar coding requirements.

4.5.1.3 Bar code character density. Standard bar code density range shall be from 3.0 to 9.4 characters per inch (CPI). When a direct-marking process is used to bar code exterior shipping

Source: https://assist.dla.mil -- Downloaded: 2016-10-21T11:29Z
Check the source to verify that this is the current version before use.

containers, a bar code character density range of 1.7 to 3.0 CPI may be used. Higher bar code densities in the range of 9.4 to 15.5 CPI may be used, when specified, for unique applications.

1. BAR CODED IDENTIFICATION MARKINGS (BCID)

A. NSN/NATO Number
(1) Typical 5950-00-123-4567
(2) Fixed Length (13 characters)
(3) No suffix or prefix bar coded

5950001234567

B. Contract Number/Procurement Instrument Identification Number (PIIN)
(1) Basic Number
(a) Typical DAHC94-88-D-0007
(b) (Fixed 13 characters)

DAHC9488D0007

(2) With Call Number (when specified)
(a) Typical DAHC94-88-D-0007-0010
(b) (Fixed 17 characters)

DAHC9488D00070010

C. Contract Line Item Number (CLIN)
(1) Typical 0020AC
(2) (Fixed 6 characters)

0020AC

D. Commercial and Government Entity (CAGE)
(1) Typical 33825
(2) (Fixed 5 characters)

33825

2. BAR CODED SERIAL NUMBERS (BCSN)

A. Basics SNs
(1) Typical 0001937
(2) Variable length
(3) Fixed length if specified

1937 OR 0001937

B. Army Weapons SN
(1) Typical 11S1937
(2) Variable length
(3) Includes specified field identifier in the bar code
(4) HRI indicates only the serial number

1937

FIGURE 19. Examples of typical bar coded fields.

4.5.1.4 Bar code configurations and basic message formats (see figure 20). The two bar code configurations are vertical (ladder)

Source: https://assist.dla.mil -- Downloaded: 2016-10-21T11:29Z
Check the source to verify that this is the current version before use.

and horizontal (picket fence). Unless otherwise specified in the contract or order, all bar codes shall be in a horizontal configuration. The two basic message formats are stacked and in-line. When two or three data messages are bar coded, one of the two basic formats can usually be utilized. However, a stacked format is preferred. When three or more data messages are bar coded in an in-line format, the minimum spacing between messages shall be increased so that false reads will not occur when using a non-contact scanner.

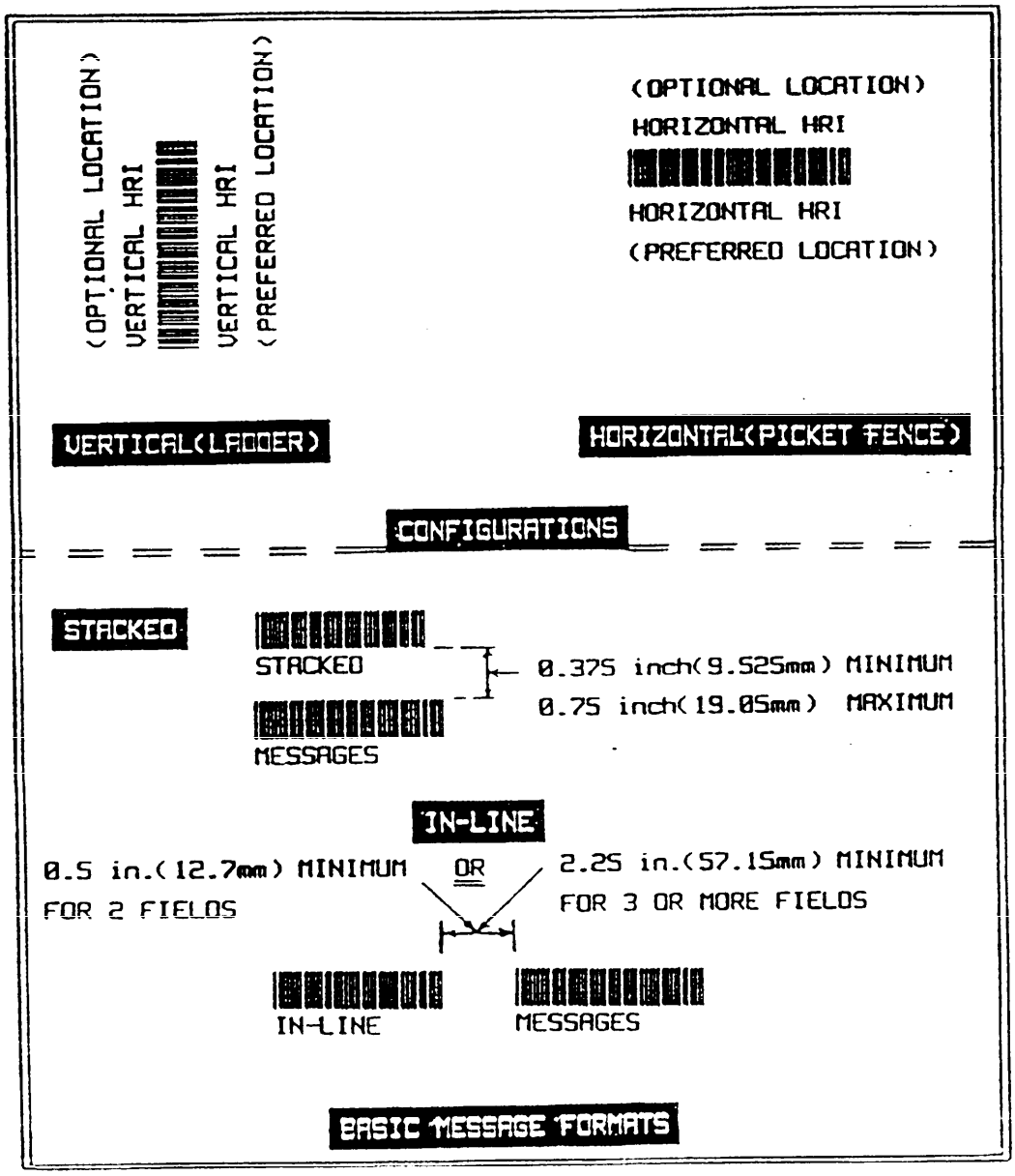

FIGURE 20. Bar code configurations and basic message formats.

Source: https://assist.dla.mil -- Downloaded: 2016-10-21T11:29Z
Check the source to verify that this is the current version before use.

4.5.1.5 Complex bar code formats (see figure 21). There may be cases requiring the use of formats more complex than the two basic formats, such as bar coding several data messages. A combination format contains two or more columns of stacked format or two or more rows of in-line format. A staggered format is similar to a combination format, but each stack of bar codes is staggered, or offset, from the adjacent stack of bar codes. The staggered format satisfies the requirement for a minimum distance of 2.25 inches (57.15mm) when there are three or more in-line bar codes.

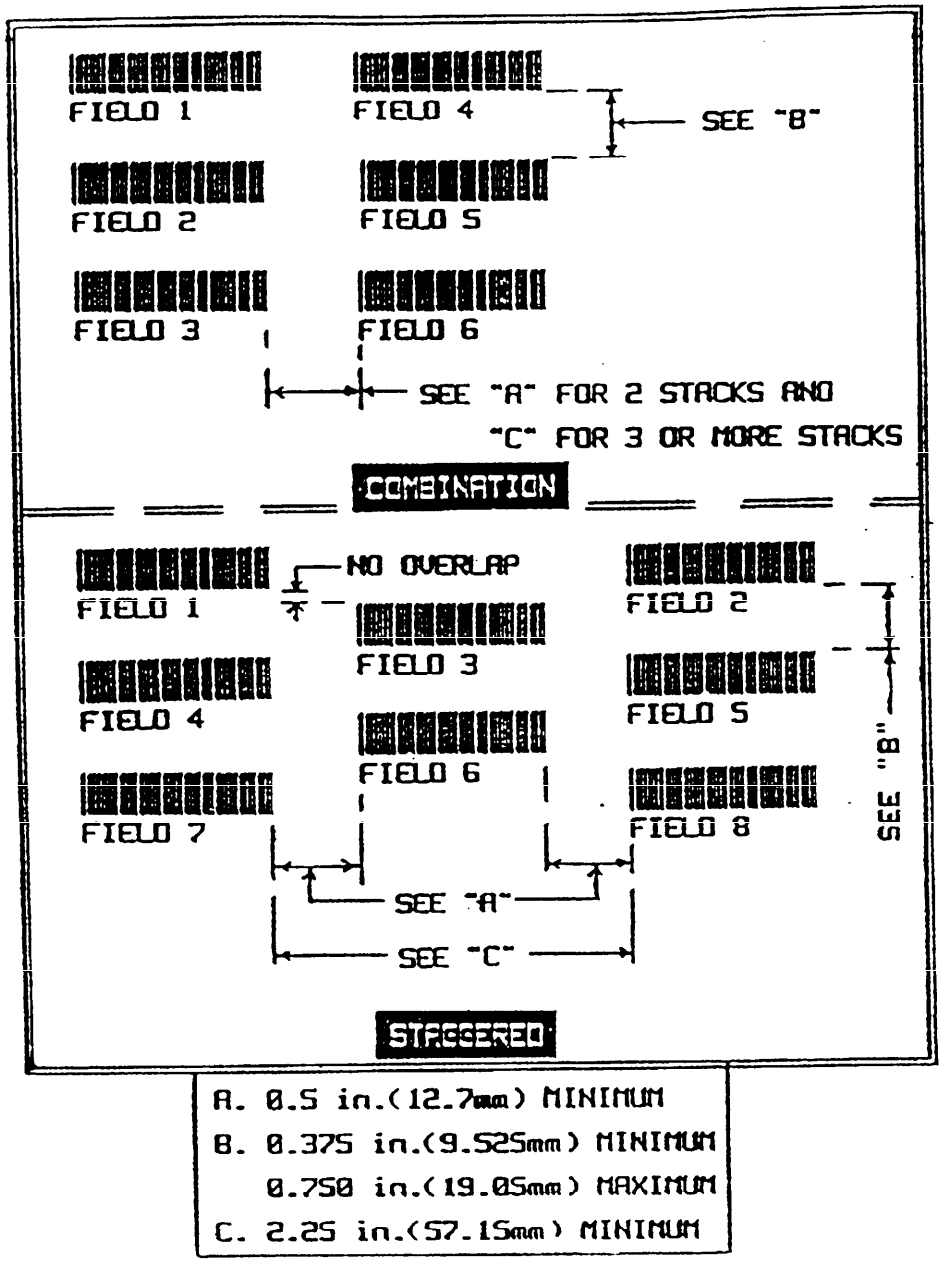

FIGURE 21. Complex bar code message formats.

Source: https://assist.dla.mil -- Downloaded: 2016-10-21T11:29Z
Check the source to verify that this is the current version before use.

4.5.1.6 Bar code format requirements (see figures 20 and 21). The following format requirements are listed in their order of preference based on ease of readability without false read when using either contact or non-contact scanners.

a. Two bar coded messages:

1. Stacked.
2. In-line.

b. Three or four bar coded messages:

1. Single stack.
2. Combination (e.g., 2 stacks of in-line bar codes).
3. Staggered (e.g., 2 staggered stacks of 2).

c. Five to 10 bar coded messages:

1. Single stack.
2. Staggered (e.g., 2 to 4 stacks of staggered bar codes).
3. Combination (e.g., 2 stacks of in-line bar codes).

d. Eleven or more bar codes:

1. Single stack (if space permits).
2. Staggered (several possible arrangements).
3. Combination (if 3 or more stacks are required, the minimum spacing between stacks is increased from .5 to 2.25 inches (12.7mm to 57.15mm)).

4.5.1.7 Methods of applying bar codes. On containers other than wood, bar code markings shall be applied by labeling or by direct printing on the container. When specified in the procurement document, bar code labels generated on thermal printers may be used on unit packs and intermediate and exterior containers. Thermal label stock shall be durable, buff-colored stock, or its equivalent. When an untinted/transparent laminate or equivalent or a stretch/shrink wrap is placed over the bar code labels, the bar code symbol shall meet the readability requirements of MIL-STD-1189. When MIL-L-61002 is specified in the procurement contract, the bar code label shall meet the durability requirements of MIL-L-61002 for the applicable grade.

4.5.1.8 Labeling wood containers. On wood containers, bar code markings shall be applied only by labels. The labeling area shall be given a smooth coat of spar varnish or a transparent acrylic, polyurethane, or epoxy coating. A clear/transparent laminate or equivalent shall be placed over the bar code label (see 4.5.1.7). In addition to a laminate or adhesive, it may also be necessary

Source: https://assist.dla.mil -- Downloaded: 2016-10-21T11:29Z
Check the source to verify that this is the current version before use.

to affix the label by stapling. Any commercial-type staple may be used as long as it is not placed within the bar code or quiet zone. The label could be affixed to a piece of card stock that is slightly larger than the label. The card stock would then be stapled to the container with heavy duty staples.

4.5.1.9 Labels on unit packs and intermediate containers. When MIL-STD-129 marking requirements are specified in the procurement contract, as a minimum, labels on unit packs and intermediate containers shall be constructed of a computer-imprintable paper with a 1-mil acrylic permanent adhesive, or equivalent. Printer ribbons of optical character reader (OCR)-grade quality, or equivalent, shall be used to mark the labels. When MIL-L-61002 requirements are specified in the procurement contract, bar code labels shall meet the requirements for a Grade C label. When the unit pack and exterior shipping container are one and the same, only exterior container bar code markings shall be applied.

4.5.1.10 Labels on exterior shipping containers. When bar code labels are printed, the printer ribbons shall be of OCR-grade quality, or equivalent, and shall produce clear, smear-resistant markings. When bar code labels are used on exterior shipping containers, a waterproof, untinted/transparent, plastic, protective laminate such as PPP-T-60, type III, class 2 tape, or equivalent protection, shall be applied to or shall be inherent to the label. PPP-T-60, type III, class 2 tape applied over a MIL-L-61002, Grade C label will upgrade that label to a MIL-L-61002, Grade B label. The bar code quality shall remain in conformance with MIL-STD-1189 after the protective coating has been applied. When MIL-L-61002 requirements are specified by the procuring activity, the labels used for bar coding shipping containers shall meet the following minimum requirements:

a. Labels used on all wood containers shall conform to MIL-L-61002, Grade A, Style 1, Composition (b) for non-porous container surfaces or Grade A, Style 2, Composition (b), for porous surfaces.

b. Labels on all other containers shall meet the following requirements. Preprinted labels shall have an untinted, transparent laminate coating, while non-preprinted labels shall have the laminate, or equivalent, applied after the bar code is printed (see 4.5.1.7). As a minimum, labels shall be constructed of a computer-imprintable paper, with a 1-mil acrylic permanent adhesive, or equivalent. Labels shall conform to MIL-L-61002, Grade A, Style 1, Composition (b) for metal and plastic containers or Grade B, Style 2, Composition (a) for domestic or weather-resistant fiberboard containers.

Source: https://assist.dla.mil -- Downloaded: 2016-10-21T11:29Z
Check the source to verify that this is the current version before use.

4.5.2 Placement of bar code markings on unit packs and intermediate containers (see figures 22 and 23, respectively). The NSN/NATO stock number shall be bar coded and applied so that the bar code is in the configuration shown. When space does not permit placement of all the required markings, including bar code markings, on one surface of the container, the bar code labels or markings shall be either placed on the opposite side of the container or on the adjacent end, or they shall be placed on a tag attached to the container.

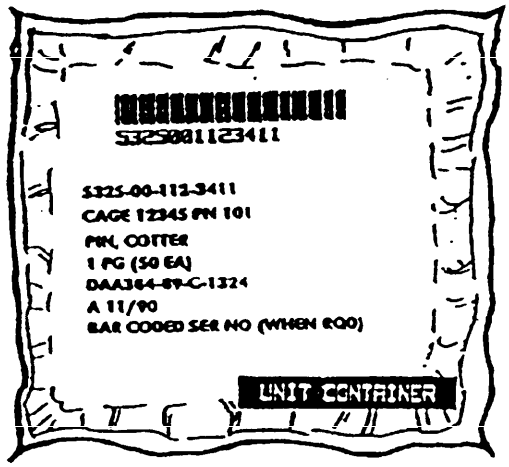

FIGURE 22. Bar code markings on unit packs.

4.5.2.1 Use of transparent containers (see figure 22). Bar code markings that are placed inside a transparent container shall be machine readable from the outside of the container. Similarly, bar code markings on containers which are shrink/stretch wrapped into a load shall be machine readable from the outside of the load in at least one location and shall meet the readability requirements of MIL-STD-1189.

4.5.2.2 Bar coded serial numbers on unit packs and intermediate containers (see figures 22 and 23). When a requirement for bar coded serial numbers is specified in the procurement contract or order, the bar codes shall be located directly below the identification markings preceded by the abbreviation "SER NO." The letters "SER NO" shall not be bar coded. When more than five serial-numbered items are in an intermediate container, the requirements for bar coded serial numbers on an exterior shipping container shall apply, as specified in 4.5.3.2.

Source: https://assist.dla.mil -- Downloaded: 2016-10-21T11:29Z
Check the source to verify that this is the current version before use.

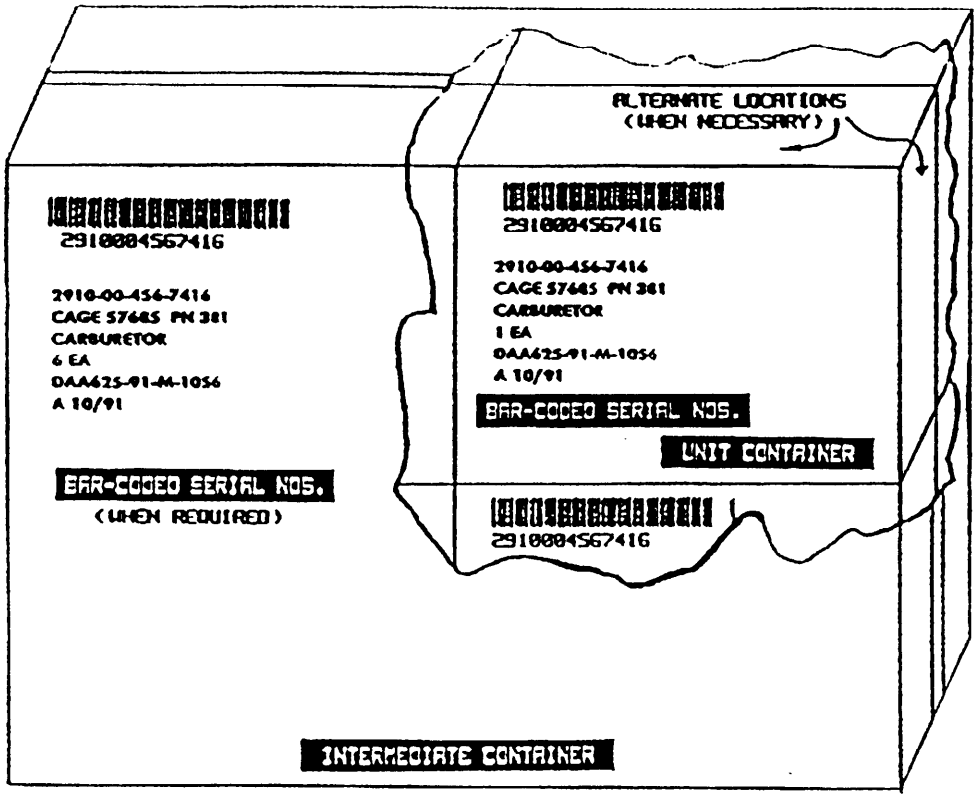

FIGURE 23. Bar code markings on intermediate containers.

4.5.3 Placement of bar code markings on exterior shipping containers.

4.5.3.1 Boxes and crates under 10 cubic feet and those 10 cubic feet and over (see figures 24 and 25). Regardless of size, the NSN/NATO stock number, contract or order number (if appropriate), CAGE code, and CLIN shall be bar coded and applied to the identification-marked side of all boxes and crates used as exterior shipping containers. Bar code symbols shall be located adjacent to the identification markings (either to the right of or below) and shall be in a horizontal (picket fence) configuration. For boxes and crates 10 cubic feet and over, bar code markings are also required on one end of the container. When a marking board/panel is used for unsheathed crates, bar code markings shall be applied immediately to the right of or below the contractor markings and shall be in line with them.

4.5.3.1.1 Location of the bar code (see figure 24). The bar code shall be applied at minimum distances of 2.0 inches (50.8mm) from the top and bottom edges and 1.0 inch (25.4mm) from the side edges. A minimum distance (quiet zone) of 0.25 inch (6.35mm) from the nearest identification marking shall be maintained. When bar codes are located below identification or contract data markings, a minimum separation of 0.125 inch (3.18mm) shall be maintained

Source: https://assist.dla.mil -- Downloaded: 2016-10-21T11:29Z
Check the source to verify that this is the current version before use.

between the markings and the top of the symbol. When cleats, strapping, or other required markings interfere with the placement of bar code markings, the bar code markings shall be placed as near as practicable to the prescribed data.

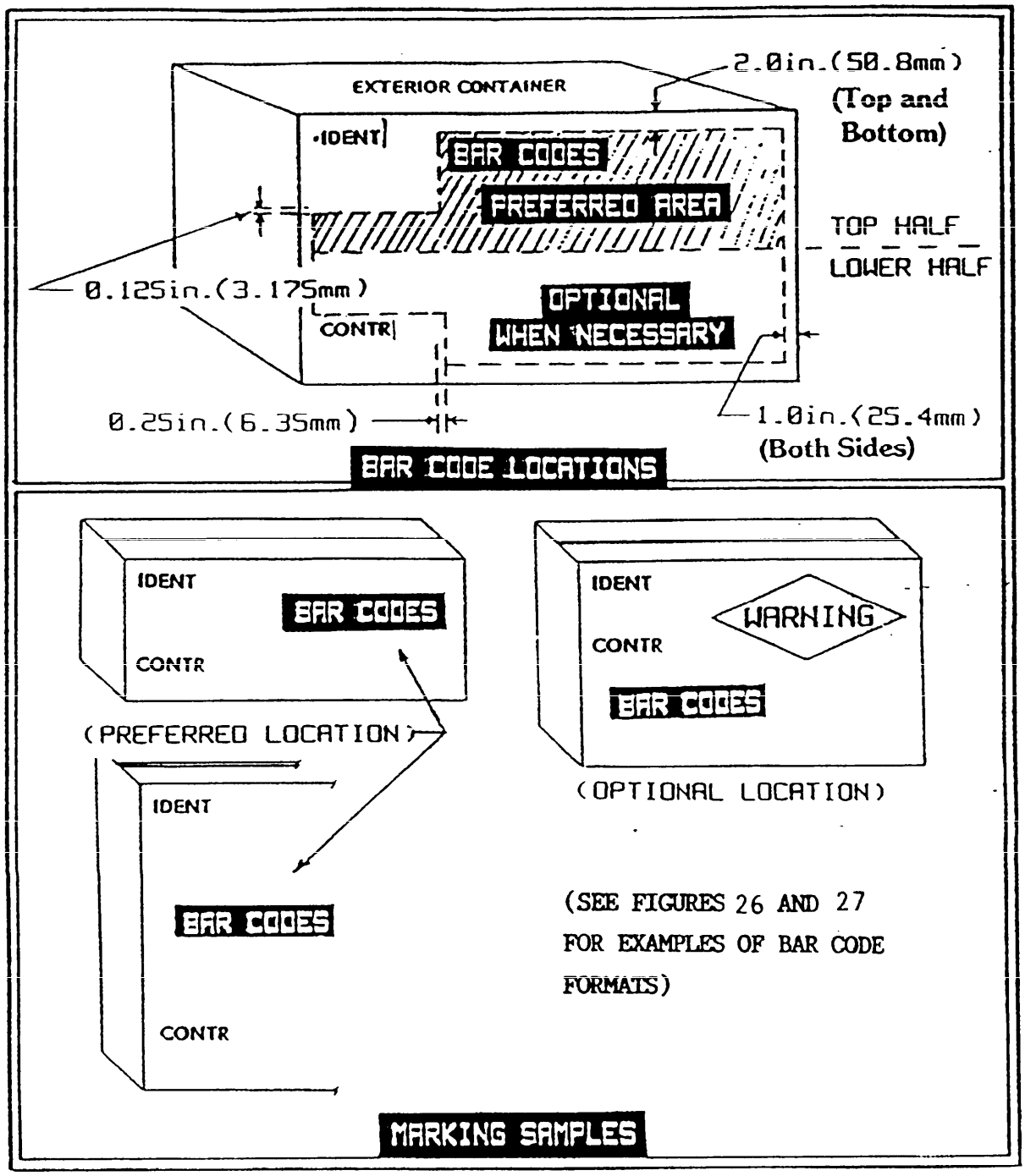

FIGURE 24. Exterior container bar code markings on boxes and crates under 10 cubic feet.

Source: https://assist.dla.mil -- Downloaded: 2016-10-21T11:29Z
Check the source to verify that this is the current version before use.

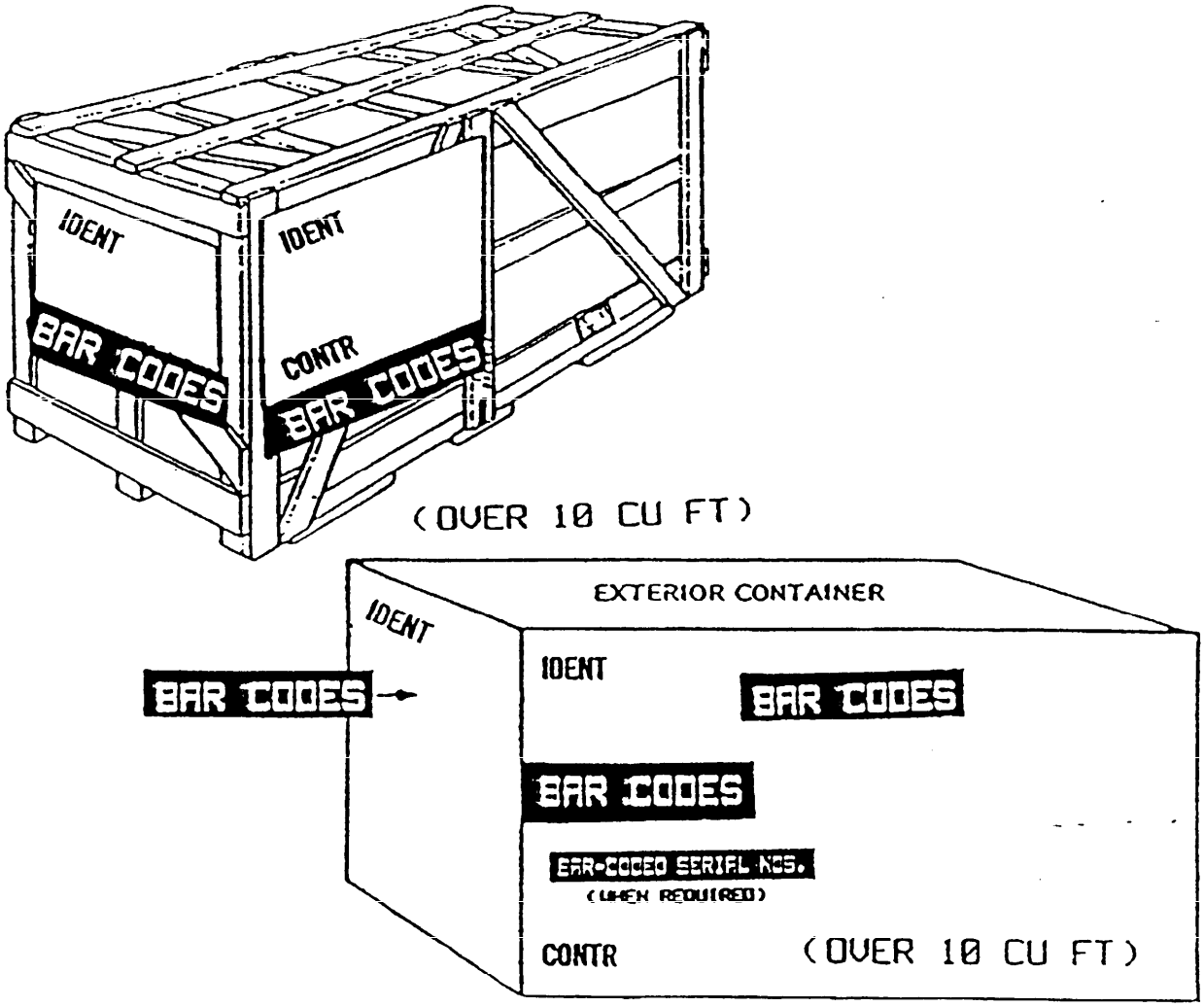

FIGURE 25. Exterior container bar code markings on boxes and crates 10 cubic feet and over.

4.5.3.2 Bar coded serial numbers on exterior shipping containers (see figure 25). When a requirement for bar coded serial numbers is specified in the contract or order, the bar codes shall be located directly below the identification markings and shall be preceded by the abbreviation "SER NO." The letters "SER NO" are not required to be bar coded. The bar codes shall be arranged in a stacked, in-line, or combination format. If more than five bar codes are required on intermediate or exterior containers, two serial number lists shall be provided in accordance with 5.2.13. The first list, which is to be placed inside the container, shall contain a bar code for each serialized item. The bar code format to be used is optional. A staggered format is recommended when more than 20 serial numbers are bar coded. Bar coding of the second serial number list, which must be included with the packing list, is optional. The words "SERIAL NUMBER LIST INSIDE" shall be marked on the identification-marked side of the container.

Source: https://assist.dla.mil -- Downloaded: 2016-10-21T11:29Z
Check the source to verify that this is the current version before use.

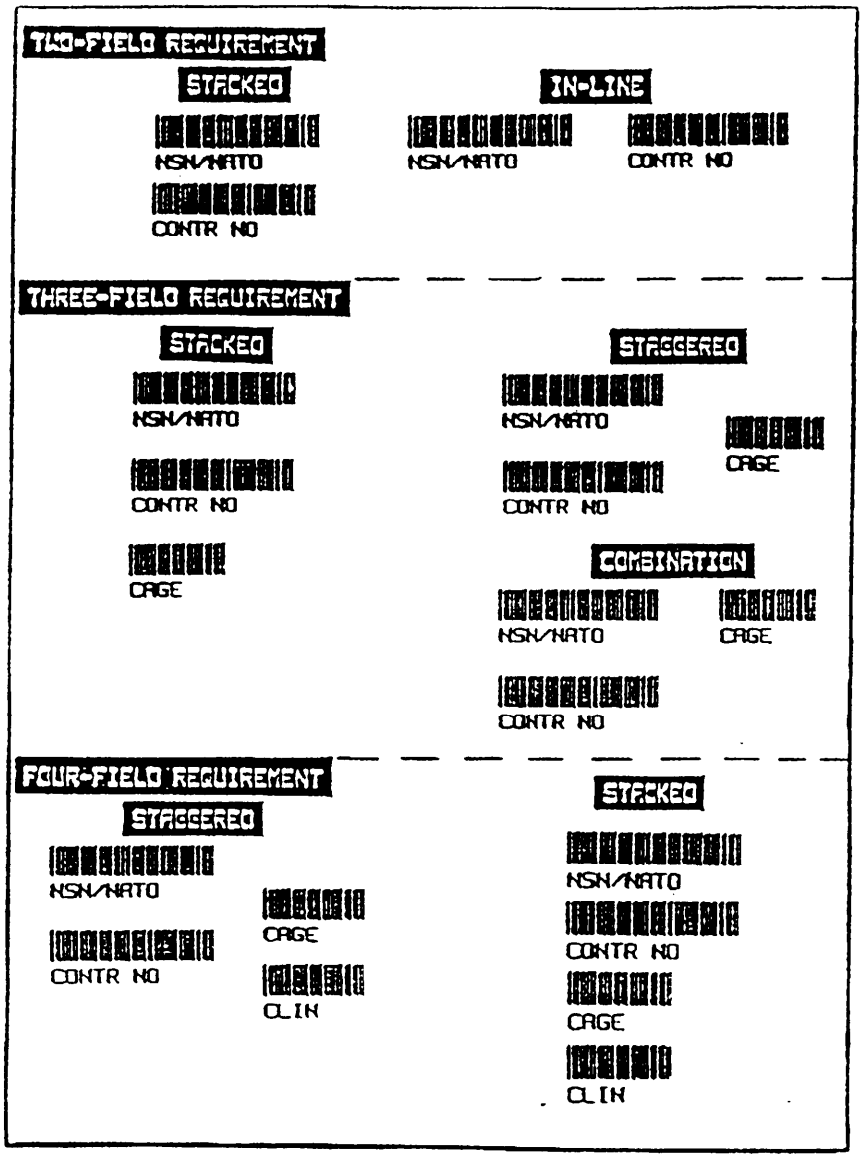

FIGURE 26. Typical bar code formats for use on exterior container surfaces and on tags.

4.5.3.3 Formats for bar coded data on exterior shipping containers and tags (see figures 26 and 27). Unless otherwise specified, bar codes required on all exterior shipping containers shall be applied in one of the following formats, listed in order of preference and illustrated in figures 26 and 27.

a. A single four-field stacked format with data fields stacked from top to bottom in the following order: NSN, contract number, CAGE code of the company awarded the contract, and CLIN (see figure 26). When a stacked format is used, bar codes shall be left-justified (left-hand (start) characters

Source: https://assist.dla.mil -- Downloaded: 2016-10-21T11:29Z
Check the source to verify that this is the current version before use.

vertically aligned). For examples of the two-, three-, and four-field format options, see figure 26.

b. A combination format arranged so that the NSN is above the contract number in the first stack and the CAGE is above the CLIN in the second stack, or a combination format that has the NSN on line one, the contract number on line two, and the CAGE followed by the CLIN on line three (see figure 27).

c. A staggered format, with the NSN and contract number in one stack and the CAGE and CLIN in the other (see figure 26).

4.5.3.4 Formats for bar coded tags to be used with exterior shipping containers (see figures 26 and 27). Any bar code format discussed herein may be applied to a tag attached to a shipping container. Tags should be marked by either direct marking or by applying pressure-sensitive labels. If space is available on the identification tag, the bar code label/marking may be applied to the right of the identification markings or below the contract data markings. If space is not available, the bar code label/marking may be applied on the reverse side of the tag.

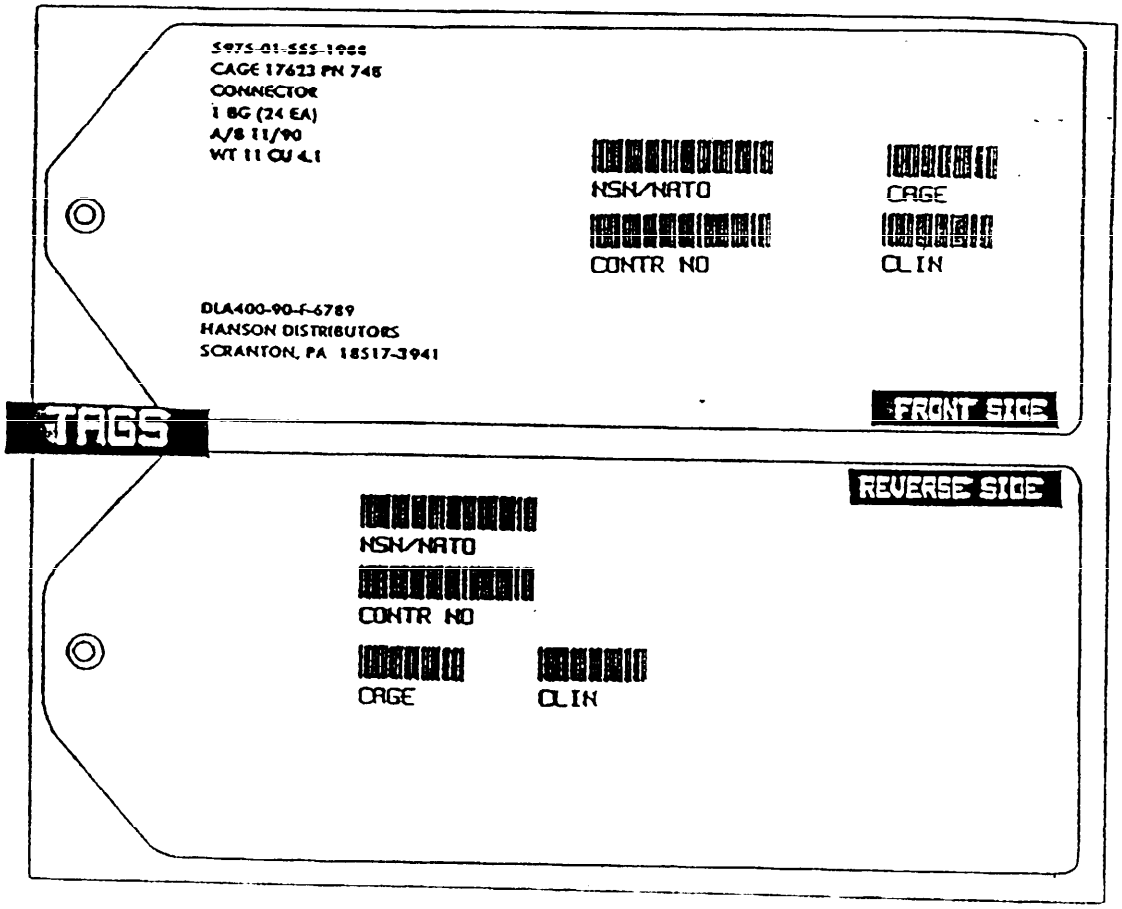

FIGURE 27. Examples of bar coded tags that may be attached to exterior shipping containers.

Source: https://assist.dla.mil -- Downloaded: 2016-10-21T11:29Z
Check the source to verify that this is the current version before use.

4.5.3.5 Bales, cloth-covered bundles, paper shipping sacks, bags and textile/laminated textile bags, rods, shafts, and pipes (see figure 28). Bar code markings shall be placed either on the container surface or on the identification tags. When tags are used for these items, the tags shall be secured as shown and shall be bar coded as described in 4.5.3.4.

4.5.3.5.1 Coils of wire (see figure 28). Bar code markings shall be applied to either side of both identification tags.

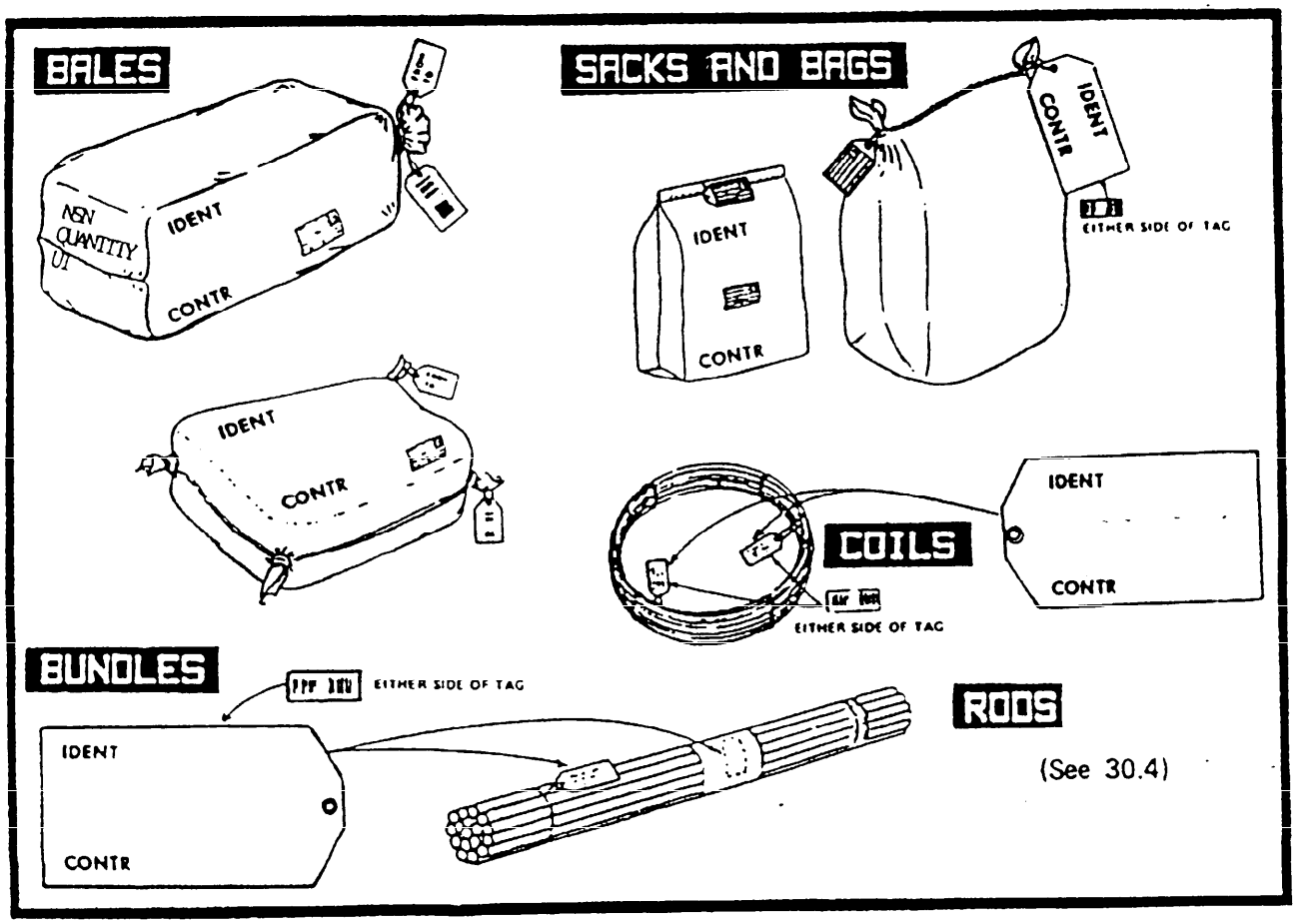

FIGURE 28. Bar coding tagged material.

4.5.3.6 Barrels, drums, and other cylindrical containers (see figure 29). Bar code markings shall be applied adjacent to the identification markings on the upper one-third of containers that are greater than 5 gallons. Bar code markings shall be applied immediately to the right of or below the identification markings on containers 5 gallons or less and shall be a minimum of 1.0 inch (25.4mm) from the bottom and top edges of the container. Stacked formats shall be left-justified. On cylindrical containers less than 5 inches (127.0mm) in diameter, bar code labels or markings shall be applied so that the bar code symbol is vertical or in

Source: https://assist.dla.mil -- Downloaded: 2016-10-21T11:29Z
Check the source to verify that this is the current version before use.

a "ladder" configuration. When the bar code is placed in this configuration, the bars must be placed 0.25 inch to 0.5 inch (6.35mm to 12.70mm) from the left edge of the identification markings. Bar code markings shall not be placed on the tear strip or container seam.

4.5.3.6.1 Markings on the tops of barrels, drums, and other cylindrical containers (see figure 29). When identification and contract data markings are applied to the tops of empty or filled shipping containers such as barrels and drums, required bar code markings shall be applied beneath the identification and contract data markings. This is in addition to the bar code requirements in 4.5.3.6. When marking reusable containers, all bar code markings that were applied for previous shipments or for storage shall be obliterated prior to application of current bar code markings.

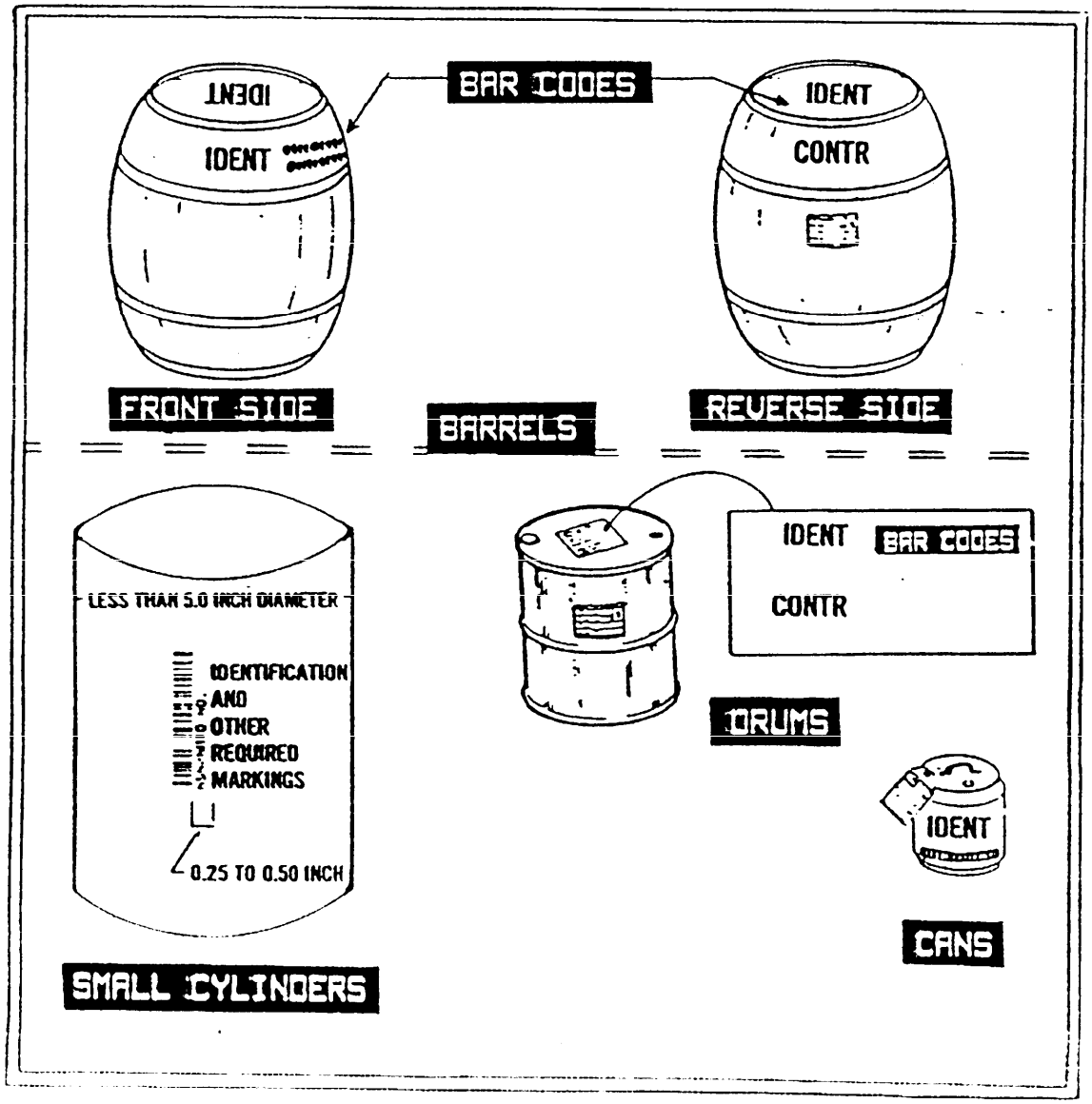

FIGURE 29. Bar code markings on cylindrical containers

Source: https://assist.dla.mil -- Downloaded: 2016-10-21T11:29Z
Check the source to verify that this is the current version before use.

4.5.3.7 Reels or spools of cable, wire, and rope (see figure 30). Bar code markings shall be applied adjacent to or beneath the contract data markings. On wood reels or spools, the surface shall be prepared and the labels shall be applied in accordance with 4.5.1.7.

4.5.3.8 Paper- and cloth-wrapped rolls (see figure 30). Bar code markings shall be applied to the right of the identification markings or immediately beneath the contract data markings.

4.5.3.9 Palletized unit loads (see figure 30). The bar code markings shall be applied to the outside of the load immediately to the right of or below the identification markings on a marking board/panel (see 5.1.9) or on the identification-marked side of the load, as appropriate (see 4.4.7). If individual containers that comprise the load are bar coded and scannable, no additional bar code markings are required.

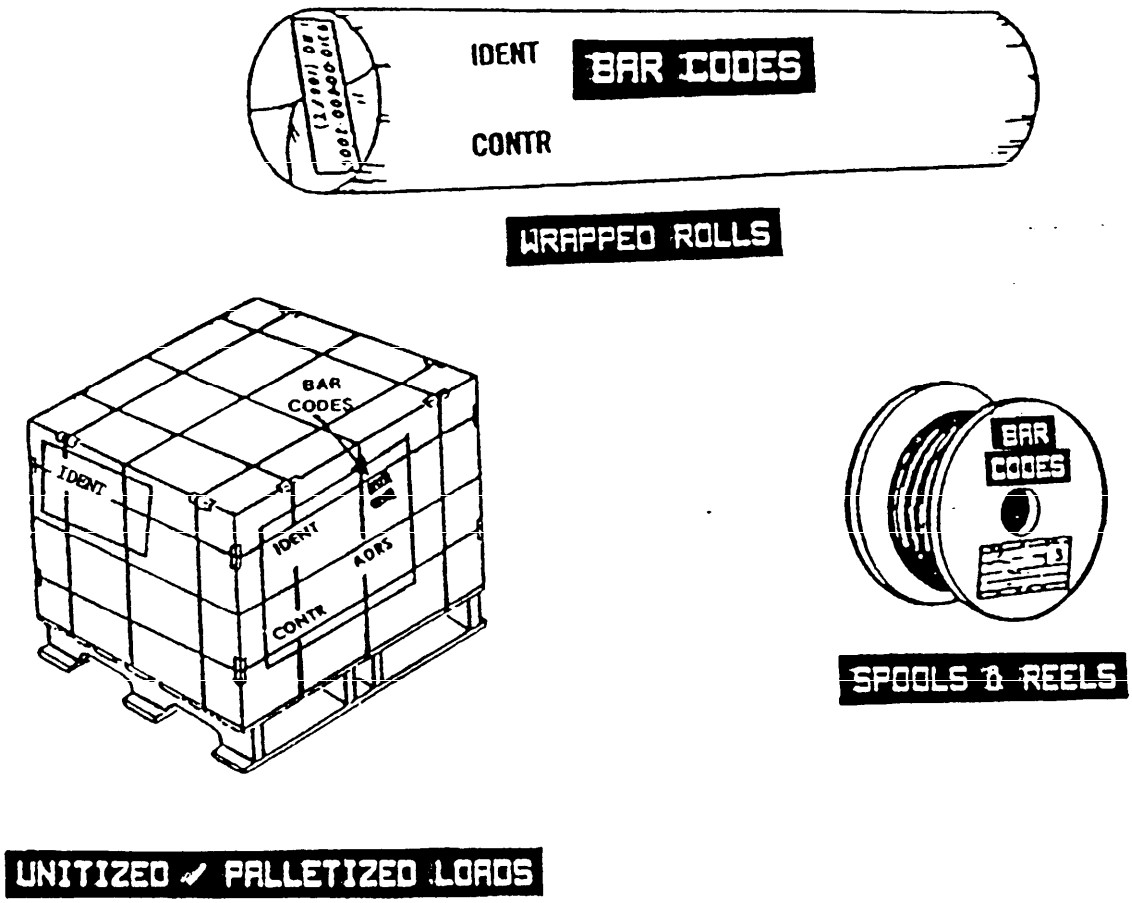

FIGURE 30. Bar code markings on miscellaneous materiel.

Source: https://assist.dla.mil -- Downloaded: 2016-10-21T11:29Z
Check the source to verify that this is the current version before use.

4.5.3.10 Unpacked major equipment (skidded or unskidded). Bar code markings shall be applied immediately to the right of or beneath the contract data markings. If a marking board/panel is used, bar codes shall be applied as specified in 4.5.3.1.

4.5.3.11 Multipacks. Multipacks shall be bar coded as follows:

a. NSN/NATO stock number. None. However, unit packs and intermediate containers that comprise the multipack shall have bar code markings applied as described in 4.5.2.

b. Contract number. The contract number shall be bar coded on the exterior of the multipack if the number applies to all unit packs and intermediate containers inside the multipack. If mixed contract numbers are contained in the multipack, then the exterior container shall not be bar coded.

4.5.3.12 Sets, kits, and outfits (SKO). Bar code markings shall be applied to all SKOs, whether the SKOs were obtained through procurement or were assembled at a DOD activity. When a multiple container SKO is comprised of other SKOs, all containers shall be marked with bar codes that identify only the final (end item) SKO. When the SKO is obtained through procurement, the NSN and contract number of the complete SKO shall be bar coded. When an SKO is assembled at a DOD activity, only the NSN shall be bar coded. All containers of a multiple container shipment shall be marked as specified in 5.2.16.

4.5.3.13 Materiel destined for resale. Unit packs and intermediate containers of materiel destined for resale that normally have a Universal Product Code (UPC) symbol need not be remarked with a 3-of-9 symbol.

4.5.3.14 Protected cargo (controlled, sensitive, classified, and pilferable items) and DPSC clothing and textile (C&T) items. Protected cargo such as controlled, sensitive, classified, and pilferable items that require the omission of specific item description markings from their outside shipping containers (see 4.2.2.3 and 4.2.2.4), shall contain the applicable bar code markings. If the NSN is included as part of the identification markings, the HRI shall be shown. However, if the NSN is omitted, the HRI shall also be omitted. For shipments of DPSC C&T items, the HRI shall remain.

4.5.3.15 Bundled wood products. Bar code markings for bundled wood products shall be applied on a marking board or panel as specified in 4.5.3.1.

Source: https://assist.dla.mil -- Downloaded: 2016-10-21T11:29Z
Check the source to verify that this is the current version before use.

4.5.3.16 Tires. Bar code markings required for exterior containers shall be applied to all tires either on the smooth surface of the outside sidewall or on the tire tread, except for those DOD sites that have the capability of preprinting or generating a bar coded DD Form 1387. When labels are used, they shall comply with MIL-L-61002, Type Optional, Grade A, Style 3-Rubber, Composition (b) (laminated). When a DD Form 1387 is used, it shall be affixed to a paper shipping tag (A-A-900 or UU-T-81), or it shall be affixed directly to the tire by those DOD sites having the capability to do so.

4.5.3.17 (Army Only) Small arms weapons containers (see figure 19). In addition to the standard bar code requirements for unit packs and intermediate and exterior containers, all small arms containers shall also contain the bar coded serial numbers of the packaged weapons. The bar coded serial numbers shall include an identifier that designates the model. The identifier shall be specified in the procurement document.

4.5.3.17.1 Bar code label requirements. The MIL-L-61002 requirements for small arms weapons containers are as follows:

a. Bar code labels used on all wood containers shall comply with the requirements specified in 4.5.1.7 and 4.5.1.10a.

b. Bar code labels on all exterior containers other than wood shall comply with the requirements specified in 4.5.1.10b.

c. Bar code labels on all unit and intermediate containers other than wood containers shall meet the minimum requirements of MIL-L-61002 for a Grade B, Composition (b) label. The style shall be specified in the procurement document.

4.5.3.17.2 Bar code message description (see figure 19). The bar code for small arms weapons consists of the serial number of the weapon preceded by a field identifier (FID). The FID on weapons consists of an "S" that is preceded by one, two, or three numerics. For example, the bar coded data 11S12345678 represents the bar code of an M16A1 rifle with serial number 12345678. The S indicates that the data which follows the S is a serial number. The numerics (11) preceding the S identifier are assigned by the item manager and designate the model of the weapon. The HRI shall indicate only the serial number without the FID.

4.6 Foreign Military Sales (FMS) marking requirements. FMS shipments shall be marked as specified in this standard and in the documents referenced herein. Identification, contract data, address, and bar code markings for unit packs, intermediate and

Source: https://assist.dla.mil -- Downloaded: 2016-10-21T11:29Z
Check the source to verify that this is the current version before use.

exterior containers, and for unpacked items shall be applied as specifed in 4.2.1, 4.2.2, 4.2.3, 4.3.1, 4.3.2, and 4.5 through 4.5.3.17.2, respectively. In addition, the following special requirements shall apply to FMS shipments.

4.6.1 Minimum package size. The minimum size box shall have enough surface area on the top and two adjacent sides to affix all required labels, packing lists, DD Forms 250 (Material Inspection and Receiving Report), DD Forms 1348-1, DD Forms 1348-1A and any other required markings without overstamping or overlapping. Bar codes shall be legible and readable. Nothing shall be placed or appear on the ends or bottom of the box, package, or container.

4.6.2 Multipacks. FMS shipments in multipacks shall be marked as specified in 4.2.2.1.2, note 4.

4.6.3 Contractor-originated shipments. The DD Form 250 shall be used as a packing list for contractor-originated FMS shipments in lieu of the DD Form 1348-1 or DD Form 1348-1A, which may be used for FMS shipments originated by DOD activities. The DD Form 250 shall be prepared as specified in the Defense Federal Acquisition Regulation (DFAR) DOD Supplement, Appendix F, Part 3, F301, Preparation Instructions. Distribution of the DD Form 250 shall be made in accordance with the DFAR DOD Supplement, Appendix F, Part 4, and any other specific information contained in the procurement contract. For additional information on the DD Form 250, see 5.3.1.2.

4.6.4 Shipments originated by DOD activities. When a DD Form 1348-1 or DD Form 1348-1A is used in FMS, a copy of the DD Form 1348-1 or DD Form 1348-1A shall be placed inside the container, and a copy of the same DD Form 1348-1 or DD Form 1348-1A shall be affixed to the exterior of the container for each item that is inside the container. Except for sensitive and/or classified items, there are no exceptions to this requirement. Automated Packing Lists (APLs) are optional and, when used, they are in addition to the DD Form 1348-1 or DD Form 1348-1A. Distribution of the DD Form 1348-1 or DD Form 1348-1A shall be accomplished as shown in figure 31. It should be noted that one copy of the DD Form 1348-1 or DD Form 1348-1A shall be forwarded (annotated with either the Government Bill of Lading number or the Commercial Bill of Lading number) to the address of the appropriate freight forwarder indicated by the Type of Address code (TAC) obtained from the Military Assistance Program Address Directory (MAPAD). Distribution of these forms is authorized by chapters 5 and 6 of DOD 4000.25-1-M, which also authorizes reprinting of additional copies of the DD Form 1348-1A. Additional copies of DD Form 1348-1A may be needed for Notices of Availability (NOA).

Source: https://assist.dla.mil -- Downloaded: 2016-10-21T11:29Z
Check the source to verify that this is the current version before use.

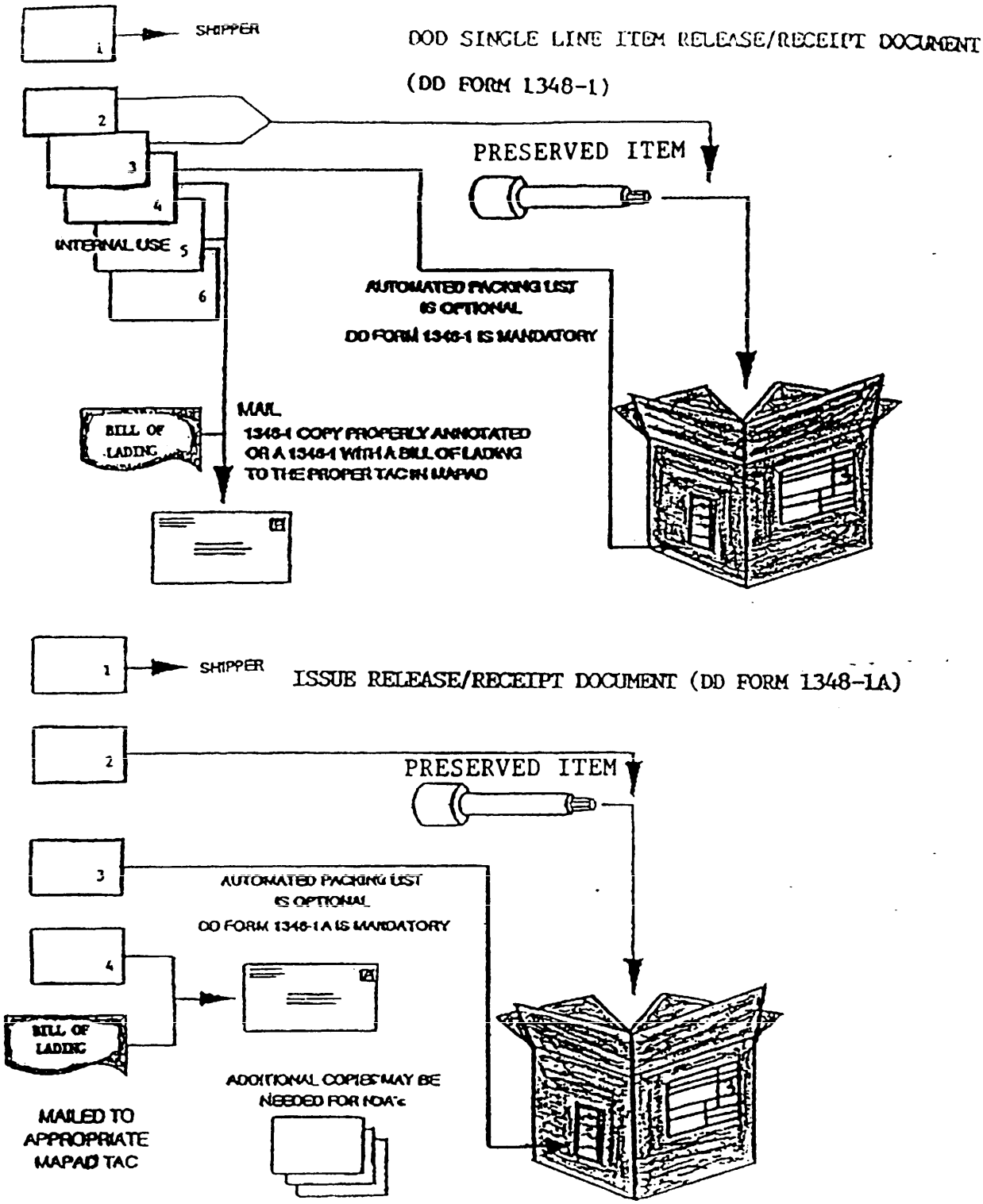

FIGURE 31. Distribution of the DD Form 1348-1 and the DD Form 1348-1A for FMS shipments.

Source: https://assist.dla.mil -- Downloaded: 2016-10-21T11:29Z
Check the source to verify that this is the current version before use.

4.7 Additional marking requirements for specific commodities.

4.7.1 Ammunition and explosives. Ammunition and explosives shall be marked for shipment and storage as specified in MIL-STD-129-1.

4.7.2 Medical material. Medical material shall be marked for shipment and storage as specified in MIL-STD-129-2.

4.7.3 Semiperishable and perishable subsistence. Semiperishable and perishable subsistence shall be marked for shipment and storage as specified in MIL-STD-129-3.

4.7.4 Hazardous materials. Hazardous materials, including hazardous wastes, shall be marked for shipment and storage as specified herein and in the hazardous materials implementing documents listed in 2.1 and 2.2 of this standard.

4.7.5 Shipments to North Atlantic Treaty Organization (NATO) countries. Shipments to NATO countries shall be marked as specified herein and in the Standardization Agreement (STANAG) 4281 for the marking of military cargo. STANAG 4281 supersedes STANAG 2023, Marking of Military Cargo for International Movement by all International Means of Transport.

4.7.6 Petroleum products. Petroleum products shall be marked for shipment and storage as specified in MIL-STD-290.

4.7.7 Unfabricated steel mill products. Unfabricated steel mill products shall be marked for shipment and storage as specified in MIL-STD-163.

4.7.8 Household goods. Household goods shall be marked for shipment and storage as specified in MIL-STD-212, DOD 4500.32-R, and DOD 4500.34-R.

4.7.9 Tires. Tires shall be marked as specified herein and in MIL-T-4.

4.7.10 Shelf-life items. Shelf-life items shall be marked for shipment and storage as specified in 5.2.1 of this standard and in DOD 4140.27-M.

Source: https://assist.dla.mil -- Downloaded: 2016-10-21T11:29Z
Check the source to verify that this is the current version before use.

5. DETAILED REQUIREMENTS

5.1 Markings and marking materials.

5.1.1 Marking materials. Marking materials to be used shall be those materials specified in this standard or alternate choices approved by the cognizant activity. Contractors may obtain the DOD-unique tags and labels discussed herein from commercial sources after obtaining samples from either the procuring activity or the local Defense Contract Management Area Operations (DCMAO).

5.1.1.1 Waterproofing materials used as protective coatings. Transparent, waterproofing materials such as spar varnish, acrylic coating compound, sealing compound, label adhesive, and pressure-sensitive tape shall be used as protective coatings on container markings.

5.1.1.2 Stencil-marking material. Unless otherwise specified by the cognizant activity, any opaque, nonfading, fast drying, weather resistant stencil ink, lacquer, paint, or enamel shall be used for stencil marking. When applied directly to the item, removable paint for marking unboxed/uncrated equipment shall conform to MIL-P-52905. A MIL-C-46168 or MIL-C-53039 coating shall be applied when stenciling containers that have had a top coat of chemical agent resistant coating (CARC) applied to them. For information on the color of markings, see 5.1.7.

5.1.1.3 Obliterating lacquer, enamel, or paint. Unless otherwise specified by the cognizant activity, any quick-drying, opaque lacquer, ink, enamel, or paint that approximates the color of the container shall be used for the obliteration of markings. When obliterating CARC painted markings on metal reusable containers, paint conforming to MIL-C-46168 or MIL-C-53039, paint chip color Green-383 or Tan-686 of FED-STD-595, shall be used. Green shall be used on green or green camouflage and tan shall be used on tan or desert sand camouflage colored containers.

5.1.1.4 Lithographing, embossing, roller coating, or stamping. When lithographing, embossing, or roller coating of markings is authorized, commercial enamels, lacquers, or inks in the color specified shall be used. When stamping is specified, commercial waterproof and petroleum-resistant inks, in the color specified, must offer the greatest durability on exposure to field service.

5.1.2 Labels, paper, pressure-sensitive, water-resistant. Unless otherwise authorized by the cognizant activity, paper labels shall be made of sized white paper stock having a smooth finish and a minimum basis weight of 20 pounds. Labels shall be of a water-resistant grade of paper, film, fabric, or plastic

Source: https://assist.dla.mil -- Downloaded: 2016-10-21T11:29Z
Check the source to verify that this is the current version before use.

and shall be coated on the unprinted side with a water-insoluble, homogeneous, pressure-sensitive, permanent type adhesive. The adhesive shall adhere to metal, plastic, or fiberboard surfaces under high and low temperatures. Labels shall have a finish capable of withstanding normal handling during shipment and storage and shall be suitable for printing and writing on with ink without feathering or spreading. The applied label must remain securely in position under anticipated conditions of handling, shipment, and storage.

5.1.2.1 Protective coating of labels. If labels for exterior containers, except vehicles and related items, are not inherently waterproof, they shall be waterproofed by coating the entire outer surface of the label with a transparent, waterproofing material (see 5.1.1.1). Labels on metal or plastic drums, pails, or cans used as exterior containers shall also be waterproofed. Labels that are applied to structural steel products also require over-coating protection.

5.1.3 Tags. Unless otherwise specified by the cognizant activity, paper shipping tags conforming to A-A-900 shall be used. A metal, cloth, plastic, or paper shipping tag such as UU-T-81, bearing the required markings, shall be used when specified in herein or when it is impractical to stencil mark or apply a label on the container or unpacked item. Aluminum foil, adhesive-backed plates, and plastic and plastic-laminated plates, authorized for use by the cognizant activity, may be used when durability is required and the costs will not exceed that of metal tags. Tags shall be attached to the container or item with a corrosion-resistant wire or twine. Tags shall not damage the item and shall be capable of withstanding repeated handling. Markings on cloth or paper tags shall be machine printed or typed with waterproof ink, while markings on metal tags shall be with dies or punches. Markings on plastic tags shall be by stenciling, stamping, embossing, machine printing (not hand printing), perforating, or, when specified, by other processes such as silk-screening, lithographing, photo marking, or by applying transfers or decals. In addition to using twine or wire, tags may also be attached by other methods such as adhesion, sewing, clips, tacks, staples, tape, nails, or plastic cable ties.

5.1.4 Water-resistant envelopes. Water-resistant envelopes for packing lists and materiel release/receipt documents shall conform to PPP-E-540. A water-resistant, pressure-sensitive tape such as PPP-T-60 or PPP-T-76 shall be used to attach the envelope to the package or container.

5.1.5 Packing list protectors. Packing list protectors shall conform to A-A-1907.

Source: https://assist.dla.mil -- Downloaded: 2016-10-21T11:29Z
Check the source to verify that this is the current version before use.

5.1.6 Conditions of surfaces to be marked. All surfaces to be marked shall be clean, dry, and free of contaminants, except as permitted in 4.4.8.2. All marks not applicable to the shipment shall be covered with obliterating lacquer, ink, enamel, or paint. Advertising matter and container markings which do not interfere with the clarity or positioning of the required markings on a container are permitted. If advertising matter prevents application of the required markings, the facility performing the packaging/packing shall obliterate the advertisement or shall use a label large enough to accommodate the required markings. If required markings cover part of the advertising, they must be a different color than the advertising matter. When shipping containers are consolidated into container vans for shipment to an ultimate consignee, obliteration of current address markings is not required. When original unopened packs are readdressed for shipment by a DOD shipping element, contract data markings shall not be obliterated unless they interfere with other required markings.

5.1.7 Legibility, durability, and color of markings. Markings shall be clear, legible, durable, and nonfading. Unless otherwise specified by the cognizant activity, the color of all markings shall be black except when applied to a surface on which black is not legible. In this case, the marking color shall be one that provides a definite contrast with the surface being marked. For example, yellow or white shall be applied over forest-green.

5.1.8 Methods of marking unit packs, intermediate and exterior containers, and loose or unpacked items. Markings shall be by tagging, stenciling, stamping, machine printing, or labeling (using preprinted labels). Other methods such as lithographing, silk-screening, embossing, photo and laser marking, and applying decals or transfers may also be used when specified by or approved by the cognizant activity. Although machine printing is preferred, hand printing may be used on packs and containers for marking any of the following: serial numbers, textile dimensions, quantity per pack, date of pack, shipment and container numbers for clothing and textile shipments, piece number, total pieces, and weight and cube. Hand printing must be clear and legible. The cure date and reinspection date for tires and tubes may also be hand printed. Abbreviations associated with these markings, such as "SER NO," "WT," and "CU," may also be hand printed.

5.1.8.1 Stenciling. Stenciling may be accomplished by rolling, brushing, or spraying with the materials specified in 5.1.1.2.

5.1.8.2 Machine printing. The required markings may be machine printed directly on all interior and exterior containers at the time of manufacture (see 5.1.8). Self-inked, porous stencils that are impressed by a data processing machine or typewriter may also be used.

Source: https://assist.dla.mil -- Downloaded: 2016-10-21T11:29Z
Check the source to verify that this is the current version before use.

5.1.8.3 Labels.

5.1.8.3.1 Use of labels. Unless otherwise specified in the procurement contract or order, bar code labels and address labels are required on all levels of military packaging. When labels are used for marking identification and contract data on unit packs, intermediate containers, exterior shipping containers, paper-wrapped rolls, and unpacked items, the required markings shall be machine printed, typed, stamped, or reproduced. Unless otherwise specified in this standard, in the procurement document, or by the cognizant activity, these same type label markings are also permitted on metal, fiberboard, and plastic shipping containers. Letters must not smear, fade, or blur under anticipated conditions of handling, shipping, and storing. Without any special surface preparation, pressure-sensitive labels that meet the requirements of 5.1.2 may be used on containers other than wood. Pressure-sensitive labels may be used on wood containers after the labeling area has been given a smooth coat of spar varnish or an acrylic, polyurethane, or epoxy coating. When authorized by the procuring activity, paper labels (stenciled or nonstenciled), that are overcoated with a label adhesive (see 5.1.1.1), may be used on wood containers for marking identification, contract data, and address information.

5.1.8.3.2 Unit pack labels. The label used to mark a unit pack shall be no larger than any side of the pack. When a transparent, plastic container is used for unit protection, the label may be inserted or affixed inside the container if the label will not affect or be affected by the method of preservation and will not obscure more than 50 percent of the surface of the container.

5.1.8.3.3 Affixing and securing paper labels (except for labels on vehicles and related equipment). Paper labels that are other than pressure-sensitive shall be securely affixed with a water-resistant label adhesive that is applied on the complete underside of the label. An alternate method of affixing and protecting labels on metal and fiberboard containers, polyethylene, rubber products, vehicles, and related equipment is by placing a transparent, waterproof, pressure-sensitive tape such as PPP-T-60 over the entire surface of the label. When pressure-sensitive labels are used, the adhesive used during the label manufacture shall be as specified in 5.1.2.

5.1.9 Marking board or marking panel. As specified herein or in the procurement contract or order, marking boards and marking panels shall be constructed of weather-resistant fiberboard, plywood, or wood-based panel (1/4-inch minimum thickness). For some unpacked items such as vehicles, the marking board/panel may be constructed of minimum 1/4-inch plywood or 1/8-inch hardboard.

Source: https://assist.dla.mil -- Downloaded: 2016-10-21T11:29Z
Check the source to verify that this is the current version before use.

5.1.10 Size of markings. Unless otherwise specified herein or by the cognizant activity, the lettering for all markings on all sizes of containers shall be in capital letters of equal height, shall be clearly legible, and shall be proportionate to the available marking space. When marking space permits, stenciled or pre-printed markings shall be not less than one-fourth of an inch nor more than 1 inch in height. Unless otherwise specified in this standard, in the procurement document, or when specified by the cognizant activity, identification, contract data, and address markings on plastic, cloth, or paper tags or labels shall be not less than 0.095 inch (approximately three thirty-seconds of an inch). On metal tags, markings shall be not less than three-sixteenths of an inch in height.

5.2 Special markings. The special markings discussed in this standard are examples of the types of special markings that may be specified in a procurement document. However, the list of special markings discussed herein is not all inclusive. Every procurement document must include all special marking requirements applicable to the contract. Unless otherwise specified, the special markings shall be placed in a conspicuous location on the identification-marked side of the applicable container or item. If sufficient space is not available on the identification-marked side of the container or item, the special markings shall be placed in the following alternate locations in the order listed: (1) the side opposite the identification-marked side, (2) the end to the left of the identification-marked side, (3) the other end (the end to the right of the identification-marked side), and (4) the top of the container. No markings shall be placed on the bottom of the container. When the special markings are stenciled, stamped, or printed on the container or item, the size of the lettering shall be proportionate with the size of the container or item. Supply-type optional form (OF) labels that identify some of the special markings are listed in table III at the end of this section.

5.2.1 Shelf-life markings (see figure 32). Shelf-life items are managed and controlled in accordance with DOD 4140.27-M. There are two types of shelf-life items. Type I shelf-life items have a definite nonextendible period of shelf-life. They are assigned alpha shelf-life codes (SLCs) (including "X"). Type II shelf-life items have an assigned shelf-life time period that may be extended after completion of inspection, test, or restorative action. Type II items are assigned numeric SLCs and "X". Time periods and SLCs are in appendix A of DOD 4140.27-M and in table IV at the end of this section. Supply condition codes which may apply to shelf-life items are in appendix B of DOD 4140.27-M and in table V herein. Items that are assigned an SLC of zero (non-deteriorative) do not require shelf-life markings. When

Source: https://assist.dla.mil -- Downloaded: 2016-10-21T11:29Z
Check the source to verify that this is the current version before use.

shelf-life markings are specified in contracts, purchase orders, purchase descriptions, specifications, materiel standards, and other procurement documents, they shall be shown below the item identification data on unit packs, intermediate containers, exterior containers, and unpacked items. When MIL-STD-1168 lot numbering is used, the date manufactured, date cured, or date assembled is not required. Shelf-life markings shall include the following information:

a. For Type I shelf-life items: manufactured (MFD) date, cured date, assembled date, packed date (apply one date, as appropriate), and expiration (EXP) date (see note). For items that contain rubber or synthetic elastomers, the expiration date shall be calculated from the cured date of the rubber/elastomer. Marking shall reflect the cured date and the expiration date.

b. For Type II shelf-life items: manufactured date, cured date, assembled date, packed date (apply one date, as appropriate), and inspection (INSP) or test date (see note). For items that contain rubber or synthetic elastomers, the inspection or test date shall be calculated from the cured date of the rubber/elastomer. Marking shall reflect the cured date and the inspection or test date.

EXAMPLE 1 (TYPE I)	EXAMPLE 2 (TYPE II)	EXAMPLE 3 (TYPE II)
MFD DATE 10/91	ASSEMBLED DATE 10/92	CURED DATE 4Q92
EXP DATE 10/93	INSP/TEST DATE 10/93	INSP/TEST DATE 4Q93

NOTE: The words "TYPE I" or "TYPE II" shall not be applied as part of the shelf-life markings. For other than cure dated items (see examples 1 and 2), the manufactured date, assembled date, packed date, expiration date, and the inspection or test date shall be expressed by the numeric month followed by the last two digits of the calendar year, with the day of the month being the last day. For cure dated items, the cured date, assembled date, expiration date, and the inspection or test date (see example 3) shall be expressed by the calendar quarter followed by the last two digits of the calendar year, with the day of the quarter being the last day. When two or more unit packs of identical items are marked with different manufacture, cure, assembly, or pack dates, the earliest date shall be shown on the shipping container. For definitions of the assembled date, cured date, expiration date, inspection or test date, manufactured date, and packed date, see 3.49.1 through 3.49.6, respectively.

Source: https://assist.dla.mil -- Downloaded: 2016-10-21T11:29Z
Check the source to verify that this is the current version before use.

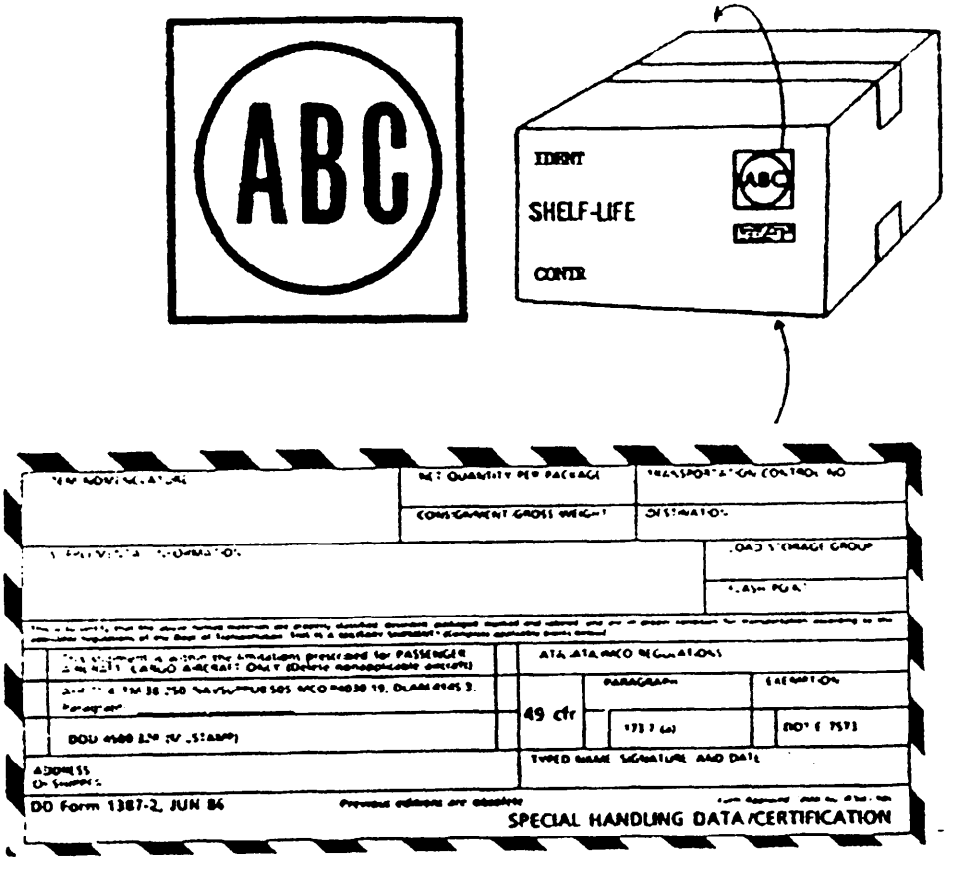

FIGURE 32. Examples of special markings (shelf-life, project code, and transportation special handling/protective services markings).

5.2.2 Project code markings (see figure 32). When specified in a contract, project code labels are required on all exterior containers. The project code shown in the requisition or procurement document (e.g., ARI, ABC, etc.), shall appear in the address and also on a white label having a black bordered disc superimposed on it. If more than one project is required, all project codes may be put on one label. Label sizes shall be 3 by 3 inches with a 2-inch diameter disc or 9 by 9 inches with a 6-inch diameter disc, with both having proportionate black lettering. The project code may also be printed or stenciled directly on a container. When markings are applied by tags, the project code shall be stenciled or printed on the identification tag adjacent to the identification markings. The project code markings shall be applied as follows:

a. Rectangular containers, consolidation containers, and palletized loads - two discs, one on each side.

Source: https://assist.dla.mil -- Downloaded: 2016-10-21T11:29Z
Check the source to verify that this is the current version before use.

b. Cylindrical containers - two discs equally spaced on the circumference.

c. Irregularly shaped containers and loose or unpacked items - stenciled or printed on the identification-marked side of a tag.

d. Vehicles or other major unpacked items - one disc on the marking board, or one disc applied directly on a vehicle by a waterproof, pressure-sensitive tape such as PPP-T-60. The tape shall be placed over the label and shall extend a minimum of half an inch from all edges of the label.

e. Postal - one disc adjacent to the address marking.

f. MILVANs/SEAVANs - not marked. However, containers or items comprising the load shall be marked (see 4.4.10).

5.2.3 Transportation special handling/protective services (see figure 32). Non-hazardous shipments moving by military controlled aircraft (including military contract airlift) requiring special handling/protective services shall have a DD Form 1387-2 (Special Handling Data/Certification) label affixed to the exterior container. The form shall be prepared as specified in DOD 4500.32-R for non-hazardous, classified/protected materiel. It shall be placed on the same side of the container as the address marking. Non-hazardous materials moving by military controlled aircraft such as items subject to damage by heat or freezing and life or death shipments also require a completed DD Form 1387-2. The shipper is responsible for completing a prescribed declaration form for each and every military air shipment containing dangerous goods, including hazardous materials. See the Joint Service Regulation AFR 71-4/TM 38-250/NAVSUP PUB 505/MCO P4030.19/DLAM 4145.3 for instructions on how to properly complete the form.

5.2.4 Structural markings. When prescribed by the cognizant activity, structural markings such as "REMOVE TOP FIRST" or "TO OPEN TOP: REMOVE SCREWS," shall be placed on shipping containers on or near the structure described. Containers designated as "reusable" shall include sufficient structural markings to provide instructions for opening and unpacking without causing damage to the container, packing materials, and the container's contents.

5.2.5 Valuable and security items. When items such as certain drugs, narcotics, precious metals, currency, jewelry, cameras, and similar type valuables are shipped, markings shall be as specified by the cognizant activity concerned or as required by regulation or statute. When no marking requirements are specified, marking shall be as prescribed in 4.2.1, 4.2.2, and 4.2.2.3, except for nomenclature/item description, which shall be omitted. Alcohol or

Source: https://assist.dla.mil -- Downloaded: 2016-10-21T11:29Z
Check the source to verify that this is the current version before use.

alcoholic beverages shall be documented and marked in accordance with U.S. Treasury Department regulations. Controlled substances shall be documented and marked in accordance with the U.S. Drug Enforcement Agency regulations.

5.2.6 Marking of Agency for International Development (AID) shipments (Office of Public Safety and Disaster Relief) (see figure 33). When specified by the requisitioning or procuring activity, AID shipments (including subsistence commodities) to recipient foreign governments and international organizations, whether shipped from CONUS, overseas stocks, or from offshore procurement sources, shall be identified with the handclasp emblem applied on each side of a container. Bulk shipments of items and loose, unpacked items shall not be marked with the emblem. The emblem shall also be applied on two areas of bundled items and on each side of the hood or cap of vehicles. It shall be printed directly on the container or shall be applied as a label or paper tag. The label size shall be 2 3/8 by 3 1/8 inches, 5 by 6 9/10 inches, 8 1/2 by 11 3/16 inches, or 11 by 14 1/2 inches. The largest possible emblem consistent with available marking space shall be used. The tag size shall be 6 1/4 by 3 1/8 inches.

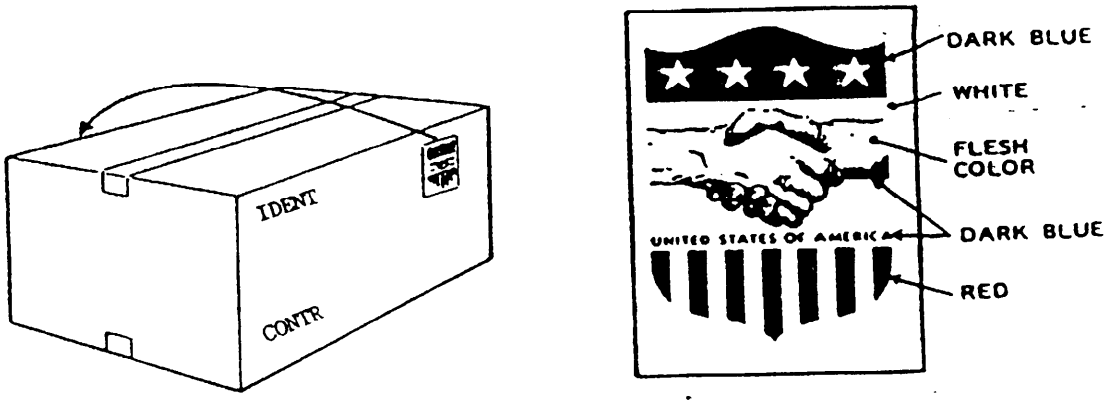

FIGURE 33. AID handclasp emblem.

5.2.7 Special handling, including arrows and FRAGILE/DELICATE markings (see figure 34). Special handling markings such as TOP, UP, THIS SIDE UP, GLASS, KEEP DRY, PERISHABLE, KEEP FROZEN, or FRAGILE or DELICATE shall be placed on shipping containers, as applicable. These markings shall not interfere with or obscure other markings. When containers are required to be stacked with the top surface up, two sides of a rectangular container and two equidistant points on the circumference of a cylindrical container shall be marked with the word "UP," with an arrow pointing toward the top of the container. The arrow shall be not less than 1 inch in length, and its overall size shall be proportionate to the

Source: https://assist.dla.mil -- Downloaded: 2016-10-21T11:29Z
Check the source to verify that this is the current version before use.

available marking space. Arrows shall be used only to indicate or supplement the words "UP" or "TOP." Containers of fragile or delicate items shall be marked with a fragile label (OFs 70A or 71A) or by stenciling or stamping the word "FRAGILE" or "DELICATE" on the container. When space permits, the marking shall be placed on the identification-marked side and one end of a rectangular container and on two equally spaced areas on the circumference of a cylindrical container. Containers imprinted with a cautionary marking do not require fragile labels or markings. For vendor shipments only, when a prescribed fragile/delicate label is not available at the time of shipment, a vendor-originated fragile/delicate label shall be used. The vendor's label shall denote the word "FRAGILE" or the word "DELICATE" or both words, with the size of the label proportionate with the size of the pack or container.

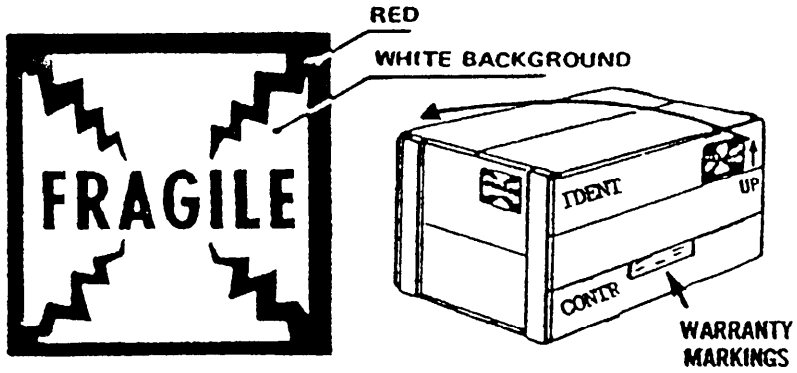

FIGURE 34. Examples of special markings (FRAGILE, UP, arrow, and warranty markings).

5.2.8 Warranty markings (see figure 34). When an item is procured with a warranty agreement, warranty markings shall be applied to all containers. Applicable warranty markings are also required on containers of serviceable/unserviceable materiel that are shipped from field units. Warranty markings shall indicate the time period or condition of the warranty (e.g., days/months, hours of operation, etc.). Warranty markings shall be applied by labeling, tagging, or printing and shall be prefaced by the words "WARRANTED ITEM." All warranty information, including "WARRANTED ITEM," shall be in upper case letters of the same style font. The markings shall be located adjacent to or above the contract data markings. Unless otherwise specified in the contract or order, this paragraph does not apply to clothing and textile items. OF 274 may be used to mark warranted items. For information on the marking of multipacks that contain items covered by a warranty, see 4.2.2.1.2, note 2. Examples of warranty markings are:

WARRANTED ITEM WARRANTY EXPIRES AFTER 1000 HOURS OF OPERATION	WARRANTED ITEM WARRANTY EXPIRES 1 JANUARY 1999	WARRANTED ITEM WARRANTY GOOD FOR 180 DAYS FROM DATE ITEM IS PUT INTO USE

Source: https://assist.dla.mil -- Downloaded: 2016-10-21T11:29Z
Check the source to verify that this is the current version before use.

5.2.9 Method II marking (see figure 35). Method II packs shall bear a Method II cautionary marking on the identification-marked side. On unit packs and intermediate containers, the Method II markings may be applied by stamping or labeling (OF 73 or OF 74). On exterior containers, the Method II marking may be applied by labeling, machine printing, or stenciling. When the Method II marking is printed or stenciled on the container, red marking ink that is waterproof, bleed-resistant, and resistant to ultraviolet ray degradation shall be used. When space is not available for a Method II label, the words "METHOD II PACKAGE - DO NOT OPEN UNTIL READY FOR USE" shall be machine printed, stamped, or stenciled on the container adjacent to the identification markings.

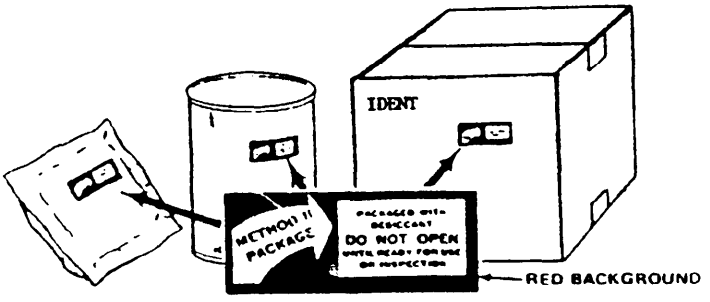

FIGURE 35. Method II marking.

5.2.10 Magnetized materials suitable for and not suitable for shipment via military aircraft (see figure 36). Containers and items that contain magnetized material, determined to be suitable for shipment by military aircraft in conformance with MIL-S-4473, shall be marked in accordance with this standard. Containers of magnetized materials suitable for shipment by commercial air shall be marked in conformance with ICAO and IATA regulations. Containers of magnetized materials determined to be not suitable for shipment by military aircraft in conformance with MIL-S-4473 shall be marked on two opposite sides with the information shown on the caution label in figure 36. The marking shall have white lettering on a black background. The Caution-Magnetic Equipment (50 ft) label (OF 78) has been canceled. Therefore, if labels are used to apply this marking, they must be locally produced or procured. Direct stenciling of the marking on a container is also authorized. Additional labels or markings may be applied, as required. When available marking space on the container surface is limited, the size of the label or marking may be reduced.

5.2.11 Magnetic tape with data (see figure 36). Containers of magnetic tape with data shall bear the fragile markings shown in figure 36. The marking shall have black lettering on a white

Source: https://assist.dla.mil -- Downloaded: 2016-10-21T11:29Z
Check the source to verify that this is the current version before use.

background. The markings shall be applied on the container either by stenciling or by labeling. The Fragile-Magnetic Tape label (OF 85) has been canceled. Therefore, if labels are used to apply this information, they must be locally produced or procured.

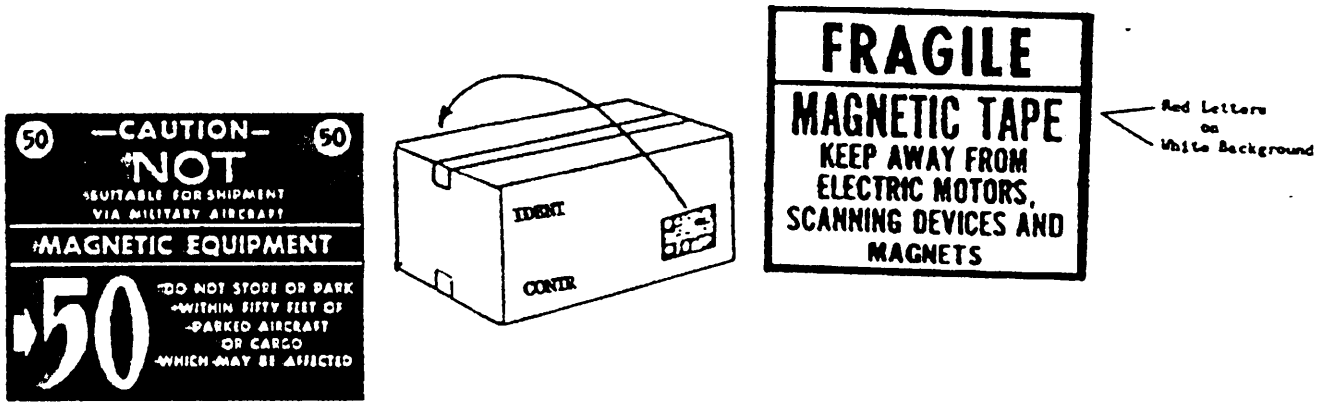

FIGURE 36. Examples of special markings (magnetic equipment caution label for materiel not suitable for air shipment and magnetic tape label).

5.2.12 Engineering or technical order changes or modifications (see figure 37). Containers of materiel that are furnished for a modification Work Order (MWO) shall be marked with the MWO number preceded by the letters "MWO." The marking shall be located in the lower right-hand corner of the identification-marked side of the container.

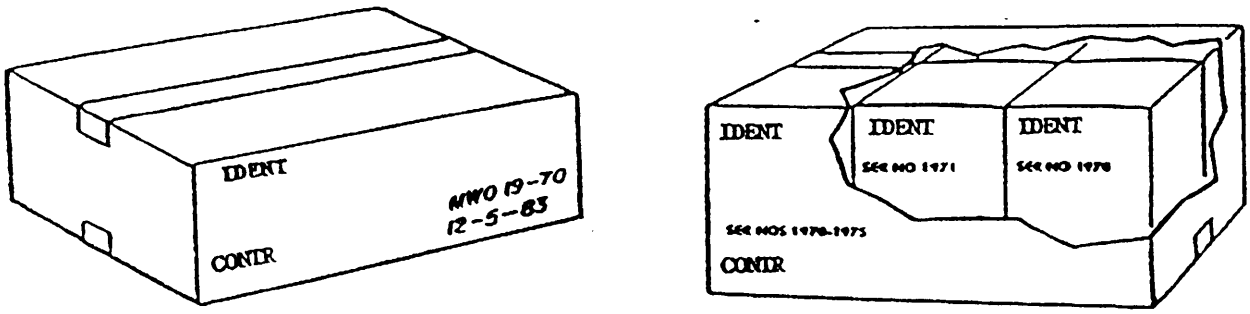

FIGURE 37. Examples of special markings (modification work order (MWO) and serial number markings on unit packs and intermediate and exterior containers).

Source: https://assist.dla.mil -- Downloaded: 2016-10-21T11:29Z
Check the source to verify that this is the current version before use.

5.2.13 Serial number (see figure 37). An item assigned a serial number shall have that number applied to the unit pack and to the intermediate and exterior containers preceded by the abbreviation "SER NO." The number shall be shown directly below the identification marking and above the contract data marking except when the item is packed in accordance with 5.2.16.1. When unit packs bearing consecutive serial numbers are packed in an intermediate or exterior container, only the first and last number in the series shall be shown. When not in sequence, each serial number shall be listed on the container. When there is inadequate space on the container for the marking of multiple sequences of serial numbers, one copy of the serial number list shall be placed inside the container and one copy shall be placed in the packing list envelope. The identification-marked side of the container shall be marked "SERIAL NUMBER LIST INSIDE." Serial numbers assigned by the manufacturer solely for indicating the quantity produced shall not be shown. For information on the bar coding of serial numbers on unit packs and intermediate and exterior containers, see 4.5.2.3 and 4.5.3.2, respectively.

5.2.14 Lot, batch, or identification control numbers (see figure 38). Lot, batch, or identification control numbers on unit packs and intermediate and exterior containers shall be preceded by the proper designation, e.g., LOT NO 5, and shall be shown adjacent to the contract number.

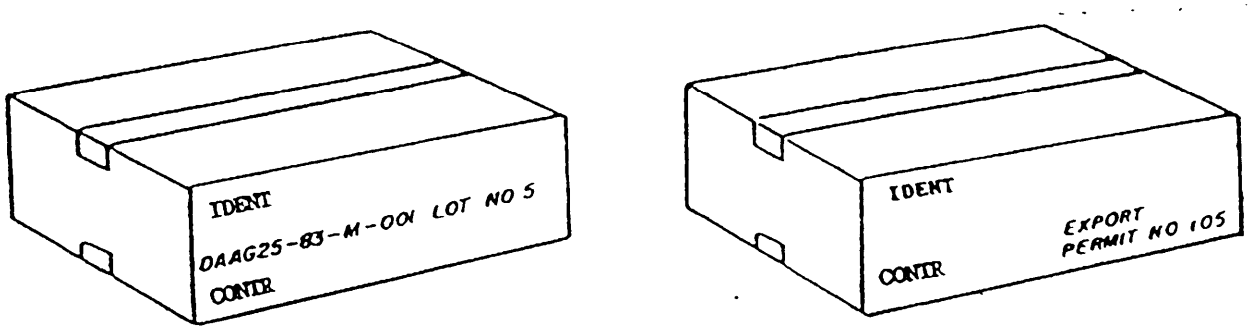

FIGURE 38. Examples of special markings (lot number and export permit number).

5.2.15 Export permit number (see figure 38). For export shipments of narcotics to countries under the International Logistics Program, the export permit number shall be shown on the outside of the shipping container. The number shall be located adjacent to the address markings and shall be preceded by the words "EXPORT PERMIT NO XX." The export permit number marking must not interfere with any other markings.

Source: https://assist.dla.mil -- Downloaded: 2016-10-21T11:29Z
Check the source to verify that this is the current version before use.

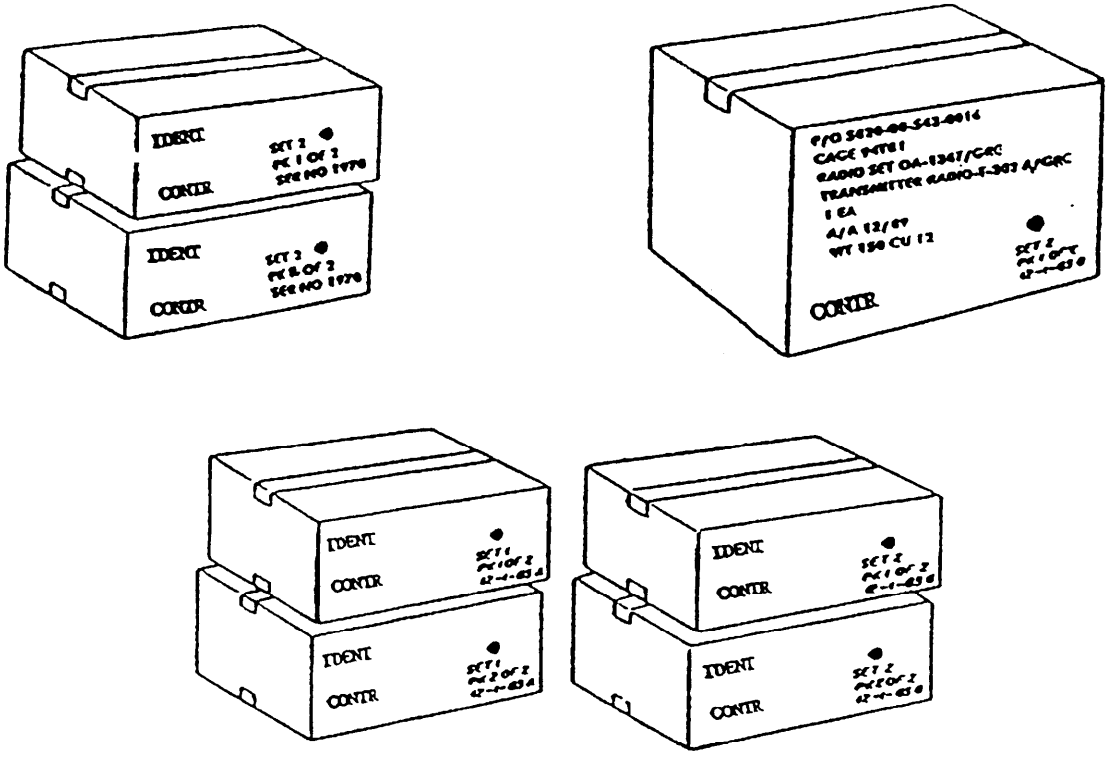

FIGURE 39. Examples of special markings (set or assembly markings, with component parts of disassembled items having serial numbers and with those not having serial numbers, and singled stock-numbered and part-numbered set markings).

5.2.16 Set or assembly markings (see figure 39). When a set or assembly is placed in two or more containers, all containers with component parts shall be shipped together. Each container shall be marked with its own number within the set, the total number of containers making up the set, and the number of the set within each shipment. Set or assembly markings shall be placed in the lower right-hand corner of the identification-marked side of the container as shown. A 2-inch black disc shall be placed above the numbers on each container. For surfaces on which black is not legible, a yellow or white disc shall be applied.

5.2.16.1 Set or assembly (component parts of disassembled items with or without serial numbers) (see figure 39). All component parts of disassembled items shall have the serial number of the item placed on each shipping container comprising the applicable set. The serial number of the item shall be shown immediately below the fractional number which identifies the individual

Source: https://assist.dla.mil -- Downloaded: 2016-10-21T11:29Z
Check the source to verify that this is the current version before use.

container and the total number of containers comprising the set. When an item which does not have a serial number is disassembled for shipment, a date (month, day, and year) followed by a capital letter to identify a set or assembly shall be shown on the shipping container in lieu of a serial number. Each set shall bear a different letter. Double letters may be used, when appropriate.

5.2.16.2 Single stock-numbered and part-numbered sets (see figure 39). This marking is used when the components of a single stock-numbered or part-numbered item are packed in two or more shipping containers or are stored together as a set. In addition to the markings in 5.2.16, the stock number or part number shown on each shipping container shall be that of the complete set and shall be prefixed with "P/O" (part of). The component shall be shown directly under the set nomenclature.

5.2.17 Consolidation containers. Consolidation containers that are shipped to a single destination but contain individual shipments/containers for multiple consignees (multiple DOD activity address codes) shall have the words "MULTIPLE DODAACS" stenciled or stamped on the outside of the container below the identification markings. This requirement applies to "kits" only if they are individual shipments that are consolidated into one container and sent to a single destination for multiple consignees. The size of the marking shall be proportionate with the overall size of the consolidation container.

5.2.18 Expedited handling - not mission capable supply (NMCS) and 999 (see figure 40). Requisitions and contracts identified as NMCS shipments shall have an NMCS code shown in the RDD block of the address label. The applicable code is 999 or the letter "N," which may be followed by the RDD expressed in the number of days from the date of requisition. NMCS condition 999 shipments shall be marked with two 999 labels, with one 999 label placed on each side of the container. For NMCS conditions other than 999, one NMCS label shall be placed adjacent to the address markings and one shall be placed on the opposite side of the container.

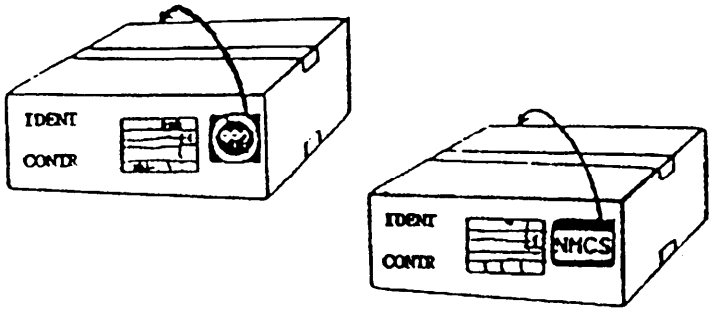

FIGURE 40. Examples of expedited handling labels.

Source: https://assist.dla.mil -- Downloaded: 2016-10-21T11:29Z
Check the source to verify that this is the current version before use.

5.2.19 Equipment which includes a battery (other than self-propelled equipment or ammunition) (see figure 41). When equipment includes a wet cell battery, the type of battery shall be plainly marked in large letters directly under the nomenclature of the item as follows: Battery, Storage (Volts), (Dry Charged, Wet Charged, or Moist Uncharged). The applicable data shall be entered by the contractor or shipper. The applicable hazardous materials markings shall be applied as specified in Title 49 CFR.

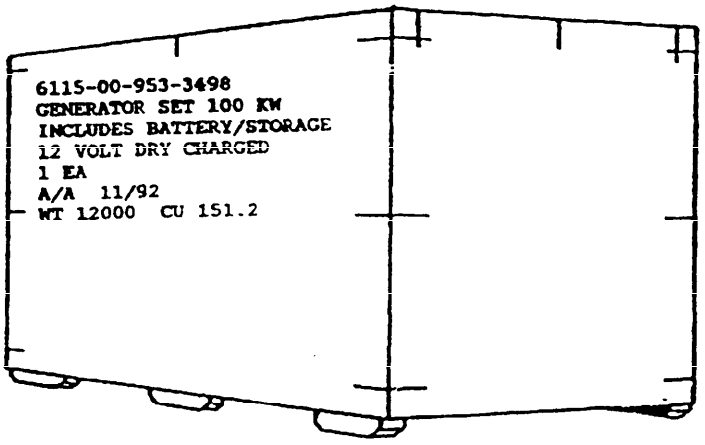

FIGURE 41. Equipment which includes a battery.

5.2.20 Center of balance and sling or lifting points (see figure 42). When the weight of an item is not evenly distributed, a 1-inch wide vertical line not less than 3 inches long locating the center of balance shall be extended up from the bottom edge of both sides of the item or its container, regardless of its length. The words "CENTER OF BALANCE" shall be stenciled or printed in 1-inch letters above or alongside the line. On unboxed equipment, the location of designated sling or lift points shall be marked in white. On vehicles that are painted white, yellow, or another light color, the markings shall be black, and the words "LIFT HERE," with an arrow pointing to the lifting eyes, shall be placed above or alongside the lifting eyes. When space does not permit, the size of the arrow and lettering may be reduced accordingly. Paint that is easily removed shall be used for marking unboxed equipment and vehicles. CARC paint or ink shall be used, when appropriate. The center of balance markings are not required on items such as MILVANs/SEAVANs which are not handled by forklifts. Demountable crates shall be conspicuously marked with the words "REMOVE LAG BOLTS BEFORE OPENING."

Source: https://assist.dla.mil -- Downloaded: 2016-10-21T11:29Z
Check the source to verify that this is the current version before use.

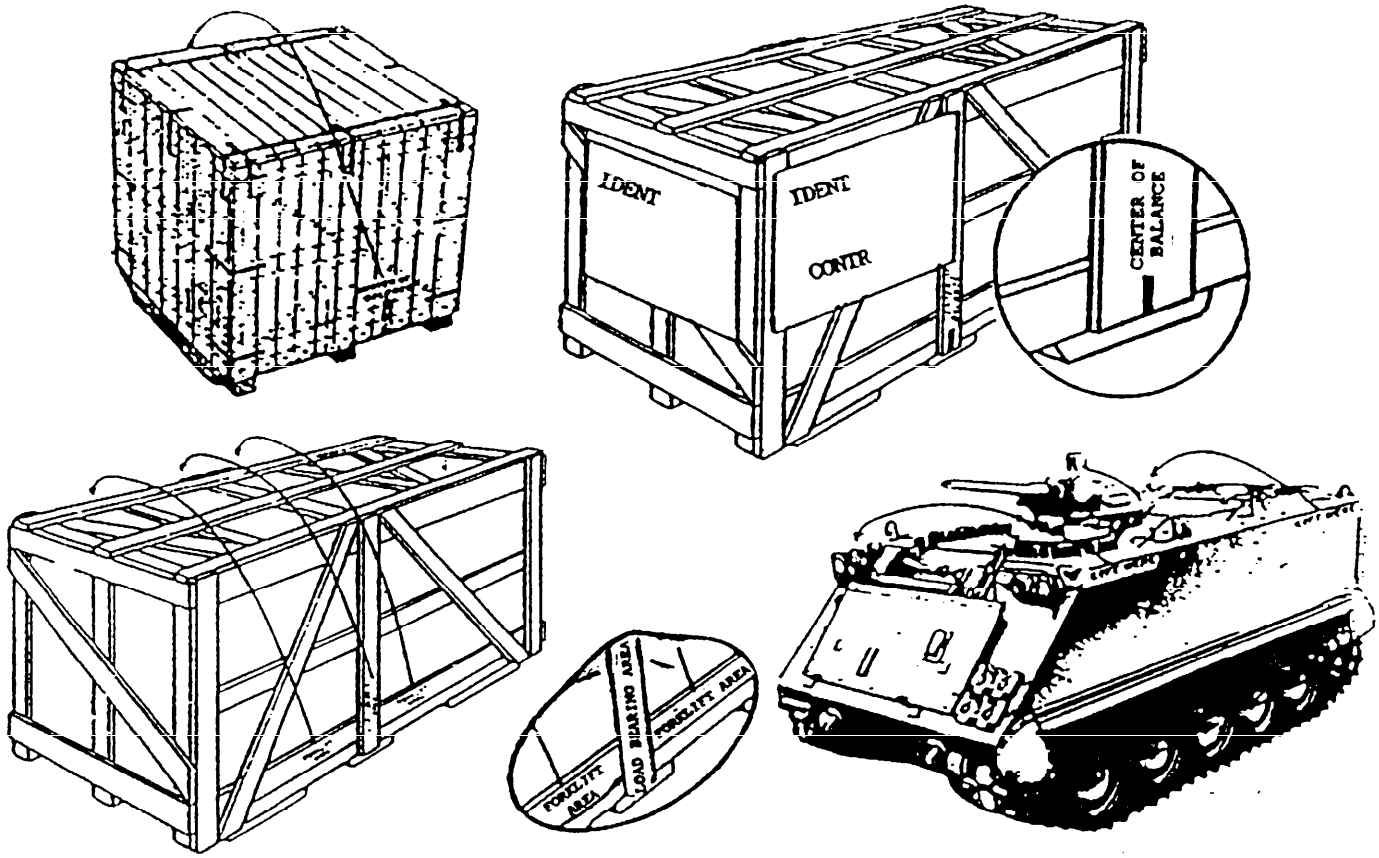

FIGURE 42. Center of balance, load bearing area, and lift point markings.

5.2.21 Load bearing areas and lift points (see figure 42). When exterior shipping containers and their contents are subject to damage caused by bending and twisting from uneven container stresses or strains, load bearing areas and lift points shall be marked on the exterior of the container. The words "LOAD BEARING AREA" shall be marked on the opposite panels of the container directly over the load bearing area. The words "FORKLIFT AREA" shall be placed directly over the forklift entry points of the skid and rubbing strip construction.

5.2.22 Axle weight markings. When axle weight markings are required, they shall be marked above each axle by stenciling or printing in 1-inch letters the words "AXLE WT" followed by the

Source: https://assist.dla.mil -- Downloaded: 2016-10-21T11:29Z
Check the source to verify that this is the current version before use.

weight in pounds. The size of the lettering may be reduced, when necessary. When marking directly on the equipment, paint shall be soluble in paint thinner or mineral spirits. CARC paint or ink shall be used when appropriate.

5.2.23 Electrostatic discharge (ESD) sensitive devices (see figures 43 and 44). All unit packs and intermediate and exterior containers of ESD sensitive devices (or other electronic items that are alone or are part of assemblies) that are susceptible to damage from ESD shall be marked as specified herein.

NOTE. The ESD sensitive devices attention labels shown in figures 43 and 44 are effective with the date of this document. However, the December 1980 editions of OF 87 and OF 87A (for intermediate and exterior containers) and the August 1990 edition of OF 88 (for unit packs) shall be used until all stocks are exhausted or until 31 December 1993, whichever occurs first. The new ESD sensitive devices attention labels discussed herein shall have the same OF numbers and NSNs as the three current OFs (see table III).

5.2.23.1 Unit packs (see figure 43). All unit packs shall be marked with the ESD sensitive devices attention label. The label shall include the ESD sensitive device symbol (triangle and reaching hand), the words "ATTENTION STATIC SENSITIVE DEVICES," and the statement "HANDLE ONLY AT STATIC SAFE WORK STATIONS." The symbol and lettering on the label shall be marked in black on a yellow background. The unit pack label shall be 2 inches long and five-eighths of an inch high and shall be placed adjacent to the identification markings on the unit pack. If the unit pack label is temporarily unavailable, unit packs shall be marked with the ESD sensitive devices symbol and the information printed on the label in figure 43. Minimum size of the symbol shall be three-eighths of an inch measured vertically at the base of the triangle. When preprinted labels are not used, the symbol shall be printed in black or the same color as the identification markings, if other than black. Unit packs that are not overpacked and are used as exterior containers shall be marked with the unit pack label.

FIGURE 43. ESD sensitive devices attention symbol and label for unit packs.

Source: https://assist.dla.mil -- Downloaded: 2016-10-21T11:29Z
Check the source to verify that this is the current version before use.

5.2.23.2 Intermediate and exterior containers (see figure 44). Intermediate and exterior containers shall be marked with the ESD sensitive devices attention label. The ESD sensitive devices symbol and the words "ATTENTION OBSERVE PRECAUTIONS FOR HANDLING ELECTROSTATIC DISCHARGE SENSITIVE DEVICES" shall be marked in black on a yellow background. One 2- by 2-inch label shall be placed on the identification-marked side of an intermediate container. Two 4- by 4-inch labels shall be placed on each exterior container that exceeds one-half cubic foot. One label shall be placed on the identification-marked side (or surface), and one label shall be placed on the opposite side (or surface). Smaller exterior containers shall be marked in the same manner except that the 2- by 2-inch label may be used in lieu of the larger label. If the label is temporarily unavailable, intermediate and exterior containers shall be marked with the ESD sensitive devices symbol and the information printed on the label in figure 44. The minimum size of the symbol shall be five-eighths of an inch measured vertically at the base of the triangle. When preprinted labels are not used, the symbol shall be printed in black or the same color as the identification markings, if other than black.

FIGURE 44. ESD sensitive devices attention label for intermediate and exterior containers.

Source: https://assist.dla.mil -- Downloaded: 2016-10-21T11:29Z
Check the source to verify that this is the current version before use.

5.2.24 Materiel condition markings. As prescribed in DOD 4145.19-R-1, materiel condition tags or labels shall be used whenever materiel may become mixed during storage or shipment within or between installations or where physical evidence is necessary for materiel control to prevent duplicate inspections, or both. Federal supply condition codes are defined in appendix B of DOD 4000.25-2-M, which is the official source for Federal supply condition codes, and in various departmental implementing documents. Organizations that use computer automation to produce materiel condition tags and labels may centrally or locally procure or manufacture tags and labels suitable for handling by a computer printer, as long as the tags and labels conform to the color, design, and material (to include the strength of the paperboard) of the government produced item. Computer-generated, adhesive-backed labels may be used in conjunction with materiel condition tags. Required information for the applicable DD Form 1570-series tag should be printed on a computer-generated label. The label should then be permanently affixed to the face of the appropriate color-coded tag, ensuring that the label does not obstruct or cover the colored-coded border of the tag. When a computer-generated label is used to cover a color-coded tag, the letters on the face of the tag shall be black rather than the same color as the border of the tag. The size of the lettering on materiel condition tags and labels shall be as specified by the respective departments and agencies. The following forms are authorized for use to indicate the condition(s) of the materiel and to identify the individual article or contents of the package, bundle, or container to which they are securely attached. These forms are not for indiscriminate use on serviceable materiel that presents no problem in storage and transfer.

a. DD Form 1574 (Serviceable Tag - Materiel) and DD Form 1574-1 (Serviceable Label - Materiel). Materiel that is serviceable (e.g., issuable without qualification, issuable with qualification, or priority issue) shall be conspicuously marked with a serviceable materiel condition tag or label. The tag and label shall have yellow borders and letters. While it is preferable to have the letters be the same color as the border, there may be cases when preprinted letters are not legible, especially in poorly lightly warehouses. In these cases, black lettering may be used. To assist in in identification, a 1- by 5-inch yellow stripe may also be printed on the back of each tag.

b. DD Form 1577-2 (Unserviceable (Reparable) Tag - Materiel) and DD Form 1577-3 (Unserviceable (Reparable) Label - Materiel). Materiel that is unserviceable (e.g., limited restoration, reclamation, reparable, or incomplete) shall be conspicuously marked with an unserviceable (reparable)

Source: https://assist.dla.mil -- Downloaded: 2016-10-21T11:29Z
Check the source to verify that this is the current version before use.

materiel condition tag or label. The tag and label shall have green borders and letters. To assist in identification, a 1- by 5-inch green stripe may also be printed on the back of each tag.

c. DD Form 1577 (Unserviceable (Condemned) Tag - Materiel) and DD Form 1577-1 (Unserviceable (Condemned) Label - Materiel). Materiel that is unserviceable (e.g., condemned or scrap) shall be conspicuously marked with an unserviceable (condemned) materiel condition tag or label. The tag and label shall have red borders and letters. To assist in identification, a 1- by 5-inch red stripe may also be printed on the back of each tag.

d. DD Form 1575 (Suspended Tag - Materiel) and DD Form 1575-1 (Suspended Label - Materiel). Materiel that is suspended (e.g., stocks awaiting classification, returns awaiting classification, ammunition suitable for emergency combat use only, reclaimed items awaiting condition determination, quality deficiency exhibits, or stocks that are being held pending negotiation or litigation) shall be conspicuously marked with a suspended materiel condition tag or label. The tag and label shall have brown borders and letters. To assist in identification, a 1- by 5-inch brown stripe may also be printed on the back of each tag.

e. DD Form 1576 (Test/Modification Tag - Materiel) and DD Form 1576-1 (Test/Modification Label - Materiel). Serviceable materiel that requires technical data markings, testing, alteration, modification, conversion, disassembly, etc., prior to issue, shall be conspicuously marked with a test modification materiel condition tag or label. The tag and label shall have blue borders and letters. To assist in identification, a 1- by 5-inch blue stripe may also be printed on the back of each tag.

5.2.25 Hardness critical item (HCI). Unit packs, intermediate containers, and exterior containers housing items identified on the parts list as "HCI" shall be marked with the symbol "HCI" by stamping or stenciling. The HCI symbol shall be placed on the identification-marked side and either end of a rectangular container and on two equally spaced areas on the circumference of cylindrical containers. The HCI lettering shall be black in color, and the size of the lettering shall conform to the requirements of 5.1.10. On forest-green containers, the HCI lettering shall be either yellow or white in color.

5.3 Exterior container documentation (packing lists, DD Forms 250, DD Forms 1155, DD Forms 1348-1, DD Forms 1348-1A, etc.).

Source: https://assist.dla.mil -- Downloaded: 2016-10-21T11:29Z
Check the source to verify that this is the current version before use.

5.3.1 Packing lists (see figure 45). Each set, kit, or assembly composed of unlike items but identified by a single stock number, single part number, or other approved military designator such as "Gun Mount, MK42 Mod 9" shall have a packing list that identifies each item securely attached to the end or side of the container. In addition, each set, kit, or assembly that comprises a palletized unit load or consolidation container shall have a detailed packing list attached to the outside surface of each container. Miscellaneous parts, accessories, or attaching hardware shall be identified on the appropriate packing list by NSN, part number, or item nomenclature. The contents of packages that contain installation or assembly hardware such as brackets, connectors, cabling, nuts, bolts, and washers shall be listed in detail on the packing list. "Kit contents lists" shall be placed inside the "kit container" and shall not be included with the packing list on the outside of the exterior container. Because packing lists attached to the outside of containers are often destroyed or damaged during shipment, it is also recommended that an additional packing list be placed inside each container. For information on exceptions to the use of exterior container documentation, see 5.3.3.

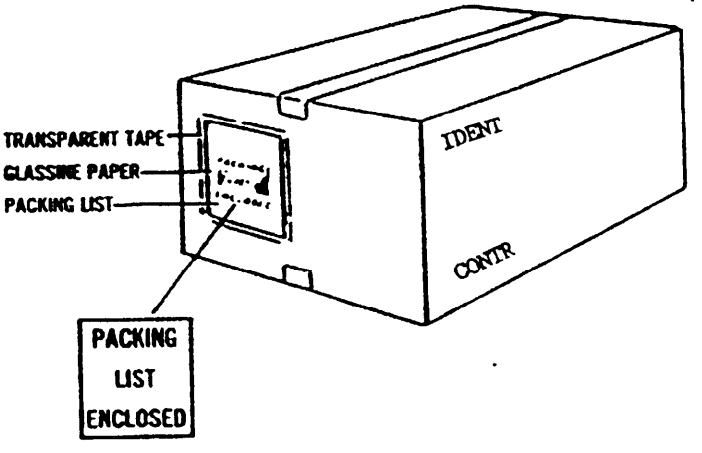

FIGURE 45. Packing list application.

5.3.1.1 Single stock-numbered and part-numbered assembled sets. Sets with two or more exterior shipping containers of different stock-numbered or part-numbered items require that a packing list be attached to the exterior of each shipping container. A master packing list shall be prepared for the set, with one copy attached to container No. 1 and one copy placed inside container No. 1.

Source: https://assist.dla.mil -- Downloaded: 2016-10-21T11:29Z
Check the source to verify that this is the current version before use.

5.3.1.2 DD Form 250 (Materiel Inspection and Receiving Report). A DD Form 250 should be used as a packing list for contractor shipments and shall be applied to each exterior container, when applicable, in accordance with 5.3.2.1 through 5.3.2.6. Copies of packing lists shall be in addition to those required for standard distribution as specified in the DFAR Supplement, and each shall be marked "Packing List." When specified in the procurement contract or when requested by the procuring activity, contractors shall place a packing list inside each container on multiple container shipments, in addition to attaching a packing list to the outside of each container. If this requirement is not specified in the contract or requested by the procuring activity, a packing list shall be applied as specified in 5.3.2.1 through 5.3.2.6. A separate "kits contents list" shall be prepared and placed inside each "kit container." The kits contents list may be placed on a DD Form 250 or on a locally prepared list. This list will not be included as part of the exterior shipping container packing list. As discussed in 4.2.2.4, multiple container shipments of DPSC clothing and textile items shall have a packing list placed inside the last container to be loaded for each shipment.

5.3.1.3 DD Form 1155 (Order for Supplies or Services/Request for Quotation). A DD Form 1155 shall be attached to a commercial packing list used by vendors and shall be applied to applicable exterior containers. When specified, as in Fast Pay Contracts, the case number and requisition number shall be included.

5.3.1.4 Packing lists for DOD-generated shipments. Any locally prepared or procured packing list may be used for shipments that are generated by DOD activities. DOD activities with facilities to program for computer output of packing lists from basic issue item or supply system responsibility item cards that are furnished by commodity managers may use these listings as a packing list for single stock-numbered or single part-numbered sets, kits, or assemblies. Contents of the listing shall be organized so that they can be readily understood and shall not include information that has no bearing on the items or to the receiving activity. When an automated packing list (APL) is used, it shall contain the minimum data listed in DOD 4000.25-1-M.

5.3.1.5 Application of packing lists. Exterior packing lists shall be sealed in water-resistant envelopes that conform to PPP-E-540, class 1, style 1, 2, 3, or 4. Class 1, style 1, 2, or 3 envelopes shall be secured to the exterior of the palletized load or container in the most protected location with PPP-T-60, style III, class 2, tape. Class 1, style 4 envelopes, with a self-adhering, adhesive-coated backing, may be applied to containers other than wood (see 5.1.4). Tacks or staples shall be used to secure envelopes on wood containers. When tacks

Source: https://assist.dla.mil -- Downloaded: 2016-10-21T11:29Z
Check the source to verify that this is the current version before use.

or staples are used, they shall not be driven into the water-resistant envelope nor shall they penetrate the inside of the container. For registered parcel post, packing lists shall be attached as specified in 5.3.2.4. Unless otherwise specified, for overseas shipments except parcel post, the water-resistant envelope containing the packing list shall be further protected with a packing list protector (see 5.1.5) that is securely attached to the palletized/unitized load or container.

5.3.1.6 Alternate application of packing lists (see figure 45). An alternate method of applying packing lists to fiberboard boxes or metal or plastic containers is by placing a glassine sheet of plastic over the folded packing list and then applying pressure-sensitive tape over the top. Tape shall extend half an inch from all edges of the packing list. The glassine plastic sheet shall have the words "PACKING LIST ENCLOSED" printed on the face.

5.3.2 DD Form 1348-1, DD Form 1348-1A, and APLs.

5.3.2.1 Shipment units of single-line items (see figure 46). For single-line item shipments, one legible copy of the DD Form 1348-1 or DD Form 1348-1A shall be attached to the materiel in shipping container No. 1. In addition, at least one legible copy of the applicable form shall be enclosed in a water-resistant envelope conforming to PPP-E-540, class 4, style 1, 2, 3, or 4, and shall be attached to the outside of the shipping container. When the storage container is used as the shipping container, the copy normally placed inside the container shall be enclosed with the copy attached to container No. 1.

5.3.2.2 Shipment units of multiple-line items (see figure 46). For multiple-line item shipments, one legible copy of the DD Form 1348-1 or DD Form 1348-1A shall be placed in a water-resistant envelope conforming to PPP-E-540, class 4, style 1, 2, 3, or 4, so that the NSN is visible. The envelope shall be attached to the package applicable to each requisition by pressure-sensitive tape. At least one legible copy of the form, applicable to each requisition, shall also be placed in a water-resistant envelope conforming to PPP-E-540, class 4, style 1, 2, 3, or 4, and shall be attached to the exterior of each multipack container. When a polyethylene bag is used to group single items for packing, the same bag shall contain a DD Form 1348-1 or a DD Form 1348-1A folded so that the identification and requisition information are visible. Although a separate packing list is not required for a multipack, it may be generated at the discretion of the shipper. If an APL is produced in lieu of a regular packing list for either a single-line or multiple-line item shipment unit, the APL shall be attached to the outside of the shipping container in a water-resistant envelope and a packing list protector (see 5.1.4 and

Source: https://assist.dla.mil -- Downloaded: 2016-10-21T11:29Z
Check the source to verify that this is the current version before use.

5.1.5). The words "MATERIAL RELEASE/RECEIPT DOCUMENTS" shall be marked on the outside of the protector. On wood containers, tacks or staples shall be used to secure packing list protectors. When tacks or staples are used, they shall not be driven into the water-resistant envelope nor shall they penetrate the inside of the container. When requested by the consignee or at the shipper's discretion, additional copies of the DD Form 1348-1 or 1348-1A may be provided for both single-line item and multiple-line item shipment units. DD Forms 1348-1 and 1348-1A and APLs shall be applied to containers of FMS as specified in 4.6.

5.3.2.3 DD Form 1348-1 and DD Form 1348-1A for FMS shipments (see figure 46). For FMS shipments, in addition to the requirements of 5.3.2.1 and 5.3.2.2, the following requirements apply:

a. One copy of the DD Form 1348-1 or 1348-1A shall be furnished to the country's designated recipient for shipment status.

b. A second set of the DD Form 1348-1 or 1348-1A shall be distributed as specified in DOD 4000.25-1-M (see 4.6.4 and figure 31).

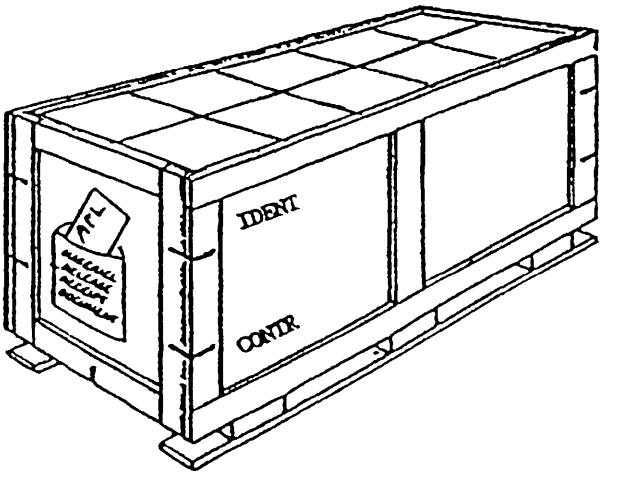

FIGURE 46. Placement of an APL in a packing list protector on an exterior container.

5.3.2.4 Alternate method of attaching the documentation that accompanies shipments to fiberboard boxes. DD Forms 1348-1, DD Forms 1348-1A, and APLs may be attached to fiberboard boxes in the following manner. Prior to sealing the fiberboard box, place the appropriate papers in a water-resistant envelope. Then place the envelope under the flaps of the box so that the open end/flap

Source: https://assist.dla.mil -- Downloaded: 2016-10-21T11:29Z
Check the source to verify that this is the current version before use.

of the envelope extends down the end of the box under the closure tape. Place the words "PAPERS HERE" on the tape in letters at least half an inch high directly over the envelope containing the papers. This is not authorized for FMS shipments, except for those sent by registered mail.

5.3.2.5 Alternate method of attaching the documentation that accompanies small parcel shipments. When the small parcel shrink-film system is used for multiple items, one copy of the DD Form 1348-1 or 1348-1A shall be attached to the materiel. For single items, two copies of the applicable form shall be placed under the shrink film in such a manner as to be read. This method is not authorized for FMS shipments.

5.3.2.6 Method of attaching accompanying documentation for shipments of unboxed vehicles and wheeled/tracked items. A minimum of two copies of the DD Form 1348-1, DD Form 1348-1A, or DD Form 250 shall be provided and shall be securely attached in or on the vehicle or item as follows:

a. Interior. Place one copy of the shipping document and one copy of the preservation/depreservation guide inside a MIL-B-117, Type I, class B, style 2 or 3 sealed bag, or inside a water-resistant envelope conforming to PPP-E-540. Attach the bag or envelope to a conspicuous central-most location inside the vehicle or item.

b. Exterior. Place the remaining copy of the shipping document and preservation/depreservation guide, unit packed as specified above, on the vehicle or item adjacent to the shipping address. Securely attach the bag or envelope as prescribed in 5.3.1.5 for the application of packing lists.

5.3.2.7 Bar coded data requirements (see figures 47 and 48). The following bar code data, with human-readable interpretation (HRI) requirements, apply to those DOD sites that have already implemented Logistics Application of Automated Marking and Reading Symbols applications utilizing the DD Forms 1348-1 and 1348-1A.

a. Bar coded data, with HRI requirements, for issue to services/agencies.

(1) Document number shall be bar coded in box 24.
(2) NSN shall be bar coded in box 25.
(3) Routing Identifier Code (RIC), Unit of Issue (UI), Quantity (QTY), Supply Condition Code (CON CODE), Distribution Code (DIST), and Unit Price (UP) shall be bar coded in box 26. The 20 data characters shall be continuous with no dashes or spaces.

Source: https://assist.dla.mil -- Downloaded: 2016-10-21T11:29Z
Check the source to verify that this is the current version before use.

b. Bar coded data, with HRI requirements, for issue to FMS/ Grant Aid customers.

(1) Document number shall be bar coded in box 24.
(2) NSN shall be bar coded in box 25.
(3) Unit of Issue (UI), Quantity (QTY), Supply Condition Code (CON CODE), Unit Price (UP), and first position and last 3 positions of supplementary address shall be bar coded in box 26. The 19 data characters shall be continuous with no dashes or spaces.

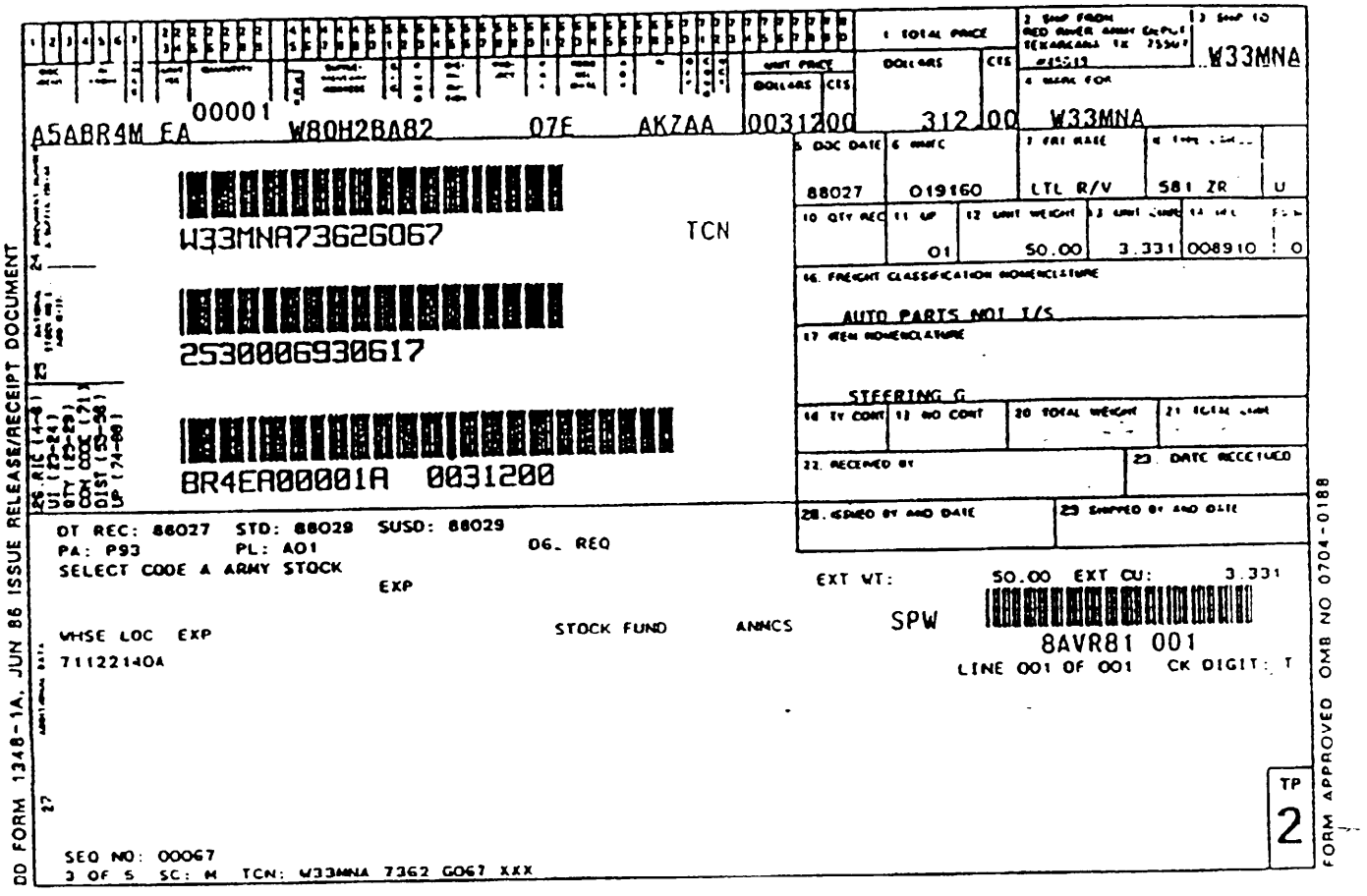

FIGURE 47. Sample of bar coded Issue Release/Receipt Document.

5.3.2.8 Bar code symbology (see figure 48). The bar code symbology shall be in accordance with MIL-STD-1189, with the following exceptions:

a. The minimum height of the bar code shall be 0.25 inch, regardless of the density (characters per inch).

Source: https://assist.dla.mil -- Downloaded: 2016-10-21T11:29Z
Check the source to verify that this is the current version before use.

b. The maximum length of the bar code shall be 4.0 inches for boxes 24 and 25. Each field shall be a fixed length of 15 characters. When there is an absence of any character(s) within these 2 fields (less than 15), encoded spaces shall be used as fillers following the given data.

c. The maximum length of the bar code in box 26 shall be 4.5 inches. Encoded spaces shall be used as fillers for any unknown, or unencoded, data characters.

FOR DRMO SHIPMENTS
(LEAVE BLOCK 26 BLANK)

DATA FOR DRMO SHIPMENTS

BR4EA00005A0C9999999

- UNIT PRICE (74-80)
- DISTRIBUTION CODE (55-56)
- CONDITION CODE (71)
- QUANTITY (25-29)
- UNIT OF ISSUE (23-24)
- RI CODE (4-6)

DATA FOR GENERAL USE AND WHEN REQUESTED

EA00004A99999999XXXX

- SUPPLEMENTARY ADDRESS (FIRST AND LAST THREE POSITIONS)
- UNIT PRICE (74-80)
- SUPPLY CONDITION CODE (71)
- QUANTITY (25-29)
- UNIT OF ISSUE (23-24)

DATA FOR FMS SHIPMENTS

FIGURE 48. Formats for bar coded data in box 26 of DD Form 1348-1A.

Source: https://assist.dla.mil -- Downloaded: 2016-10-21T11:29Z
Check the source to verify that this is the current version before use.

5.3.2.9 Computer-generated forms. The standard preprinted DD Form 1348-1 is 8 inches (203.2mm) wide (side line to side line) and 5 inches (127.0mm) high (top line to bottom line). Those sites having the means to generate the form as well as the data may generate a form whose size may vary in width from 8 inches to 9 inches (203.2mm to 228.6mm) and in height from 4 inches to 5.5 inches (101.6mm to 139.7mm). The tolerance for these dimensions is plus or minus 0.125 inch (3.18mm). The basic format shall remain the same and the in-the-clear/human readable data must be easily read. Margins of 0.25 inch (6.35mm) and outside lines are necessary except for the bottom line which may be eliminated. The "form approved" information and DD form number shall remain. Block 27 shall contain all additional data and in-the-clear text that may be required and is not shown elsewhere on the form. The clear text may be in conjunction with bar coded information for those activities possessing bar code capability. The paper may be any color that provides a minimum bar code print contrast signal as specified in MIL-STD-1189.

5.3.3 Exceptions to the use of exterior container documentation, such as packing lists, DD Forms 250, DD Forms 1155, DD Forms 1348-1, and DD Forms 1348-1A (see figure 49). With the following exceptions, exterior container documentation is required on all contractor and DOD shipments.

a. No exterior documentation is required for containers of like items or single-item packs when the contents are listed on a label attached to the boxes, lithographed or printed on the boxes, or when a manufacturer's part list is provided. For FMS shipments, exterior container documentation is always required.

b. For controlled, sensitive, classified, and pilferable items (except for FMS shipments), the shipping documentation shall be placed inside all containers rather than on the outside. This is especially important for multiple container shipments. Should the number one box get separated from the rest of the shipment, it would be difficult to determine the actual destination for the other containers in the shipment and could result in a frustrated shipment. For classified shipments, markings which indicate the classified nature of the materiel, its security classification, and the name of the manufacturer, if it will identify the classified nature of the shipment, shall not appear on the exterior of each container. If a pilferable shipment is also an FMS shipment, the exception does not apply. A copy of the applicable documentation such as the DD Form 250, DD Form 1155, DD Form 1348-1 or DD Form 1348-1A must be placed on the exterior of all pilferable FMS shipments.

Source: https://assist.dla.mil -- Downloaded: 2016-10-21T11:29Z
Check the source to verify that this is the current version before use.

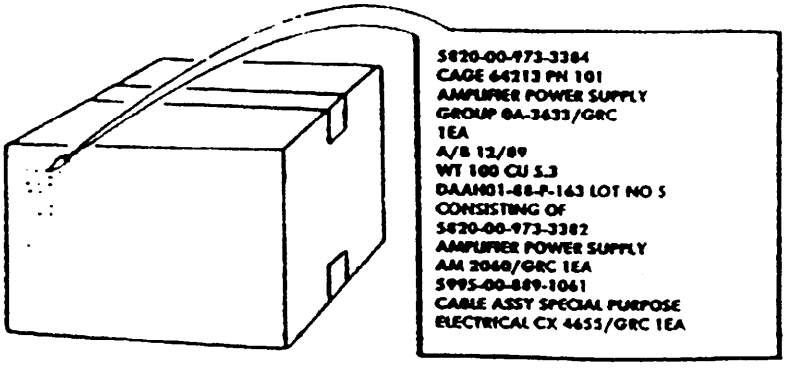

FIGURE 49. Single stock numbered item consisting of other stock numbered items in a single container.

5.4 Hazardous materials (HAZMAT). The marking and labeling requirements for shipments of HAZMAT, including hazardous wastes, shall be accomplished and positioned as stated herein and in the applicable modal regulations.

5.4.1 HAZMAT marking and labeling requirements. Depending upon the mode of transportation, HAZMAT shall be marked and labeled in accordance with Title 49 CFR, ICAO Technical Instructions for the Safe Transportation of Dangerous Goods by Air, IATA Dangerous Goods Regulations, the IMO IMDG Code for water shipments, and AFR 71-4/TM 38-250/NAVSUP PUB 505/MCO P4030.19/DLAM 4145.3 for military air shipments, as applicable. Explosives and ammunition shall be marked and labeled in accordance with the above listed documents and as specified in MIL-STD-129-1. Proper shipping names (PSNs), HAZMAT North American (NA) or United Nations (UN) identification numbers, HAZMAT classification warning labels, and HAZMAT UN-recommended performance-oriented packaging (POP) certification markings shall be placed on the exterior container, as required (see figure 50). Special markings such as "FRAGILE," "GLASS," or arrows shall be applied to either the identification-marked side or the top of the shipping container, as applicable. Shipping containers identified for international transportation shall be marked, labeled, and documented to meet UN requirements in accordance with the appropriate modal regulation. Until 1 October 1993, domestic shipments not destined for export may be marked and labeled in accordance with the 1990 Title 49 CFR or the 1 October 1991 Title 49 CFR (to meet UN requirements). However, all marking, labeling, and documentation shall be consistent with the hazard classification and communication requirements set forth in the 1 October 1991 Title 49 CFR. Government-owned dangerous goods that were packaged prior to 1 January 1988 and destined for

Source: https://assist.dla.mil -- Downloaded: 2016-10-21T11:29Z
Check the source to verify that this is the current version before use.

international surface shipment or military air shipment may be marked in accordance with Title 49 CFR (dated prior to 1 October 1991). In this case, shipping papers shall be annotated with the following clause: "Government-owned goods packaged prior to 1 January 1988." The HAZMAT classification warnings listed in table VI shall be applied, as required.

5.4.2 Proper shipping name and identification number (see figure 50). The PSN and NA or UN identification number shall be marked on the exterior shipping container (see 4.2.2g). PSNs for n.o.s. items must be followed by a technical name in parentheses. The PSNs and identification numbers are listed in Title 49 CFR, 172.101, latest revision, and in AFR 71-4/TM 38-250/NAVSUP PUB 505/MCO P4030.19/DLAM 4145.3, chapter 4. NA numbers are not authorized for international shipments. The applicable international modal document should be used to determine the UN PSN and identification number for international shipments. When a multipack contains HAZMAT, the PSNs and identification numbers shall be marked on each applicable container in the multipack. These PSNs and identification numbers shall also be listed on the identification-marked side of the multipack. Applicable HAZMAT classification warning labels for each class of material contained in the multipack shall also be applied on the outside surface.

5.4.3 Marking and labeling of air and water shipments. Marking and labeling requirements for shipments of HAZMAT by commercial air are specified in Title 49 CFR and in the ICAO technical instructions. Although most DOT labels are compatible with IATA and ICAO requirements, the applicable regulations should also be consulted. When shipment is by military airlift or contract carrier, the requirements of AFR 71-4/TM 38-250/NAVSUP PUB 505/MCO P4030.19/DLAM 4145.3 shall apply. In addition, for all air shipments, the outer container of combination packages, having inner receptacles that contain a liquid HAZMAT, must be marked "AIR ELIGIBLE" to verify that either the inner container(s) or the outer container meet the internal pressure requirements for air eligibility. This required marking is in addition to any applicable UN-recommended packaging certification markings. The size of the marking shall be proportionate with the size of the container. When known, the tested kilopascals (kPa) may be marked below the "Air Eligible" wording. A kPa is the international unit of measure for internal pressure. The formula for converting to kilopascals is "psi X 6.89 = kPa." The words "AIR ELIGIBLE" are not required for single containers of HAZMAT because the kPa is already built into the UN certification code. The marking and labeling requirements for the shipment of HAZMAT materials by vessel are specified in Title 49 CFR and in the IMO IMDG Code. The IMO IMDG Code is used for overseas shipments by vessel.

Source: https://assist.dla.mil -- Downloaded: 2016-10-21T11:29Z
Check the source to verify that this is the current version before use.

5.4.4 Precautionary marking and labeling by other statutes or regulations. Markings required for any purpose by regulations or statutes such as Title 29 CFR or Title 40 CFR and regulations issued under their authority shall neither obscure nor be obscured by other markings. Also, HAZMAT offered for shipment via the United States Postal Service (USPS) shall be marked and labeled in accordance with the USPS Publication No. 52.

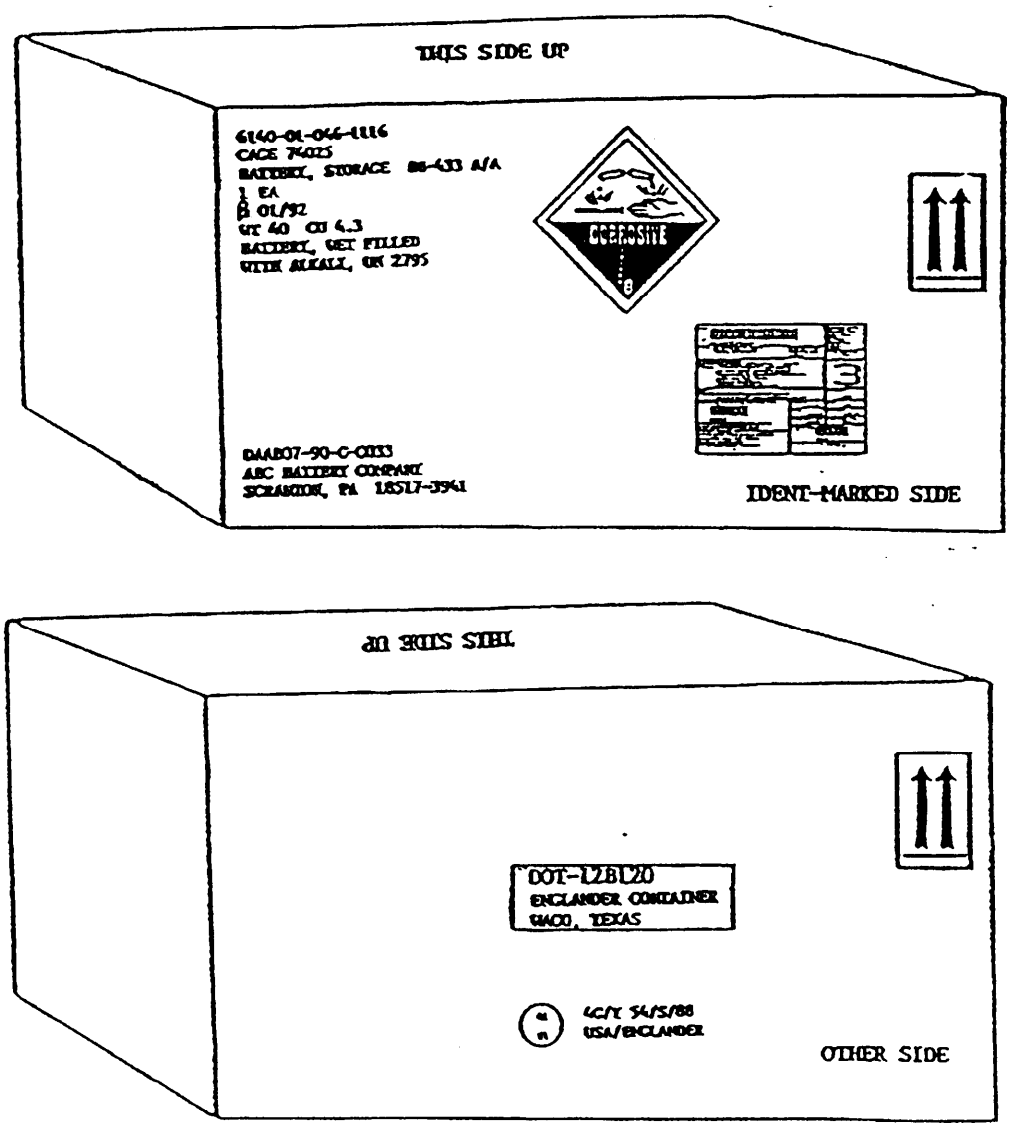

FIGURE 50. An example of exterior container HAZMAT marking and labeling requirements, including POP markings.

Source: https://assist.dla.mil -- Downloaded: 2016-10-21T11:29Z
Check the source to verify that this is the current version before use.

5.4.5 Identifying containers and packagings (see figure 50). Containers or configurations (packagings) shall be identified as complying with applicable DOT regulations, Federal or military specifications, and UN recommendations by one or more of the following options. When a container or packaging meets a DOT specification and has also passed the applicable UN-recommended performance tests, the container (packaging) shall be marked with both the DOT container specification marking and the UN packaging certification marking. When a container that is manufactured to a Government drawing, packaging drawing, or specification has successfully passed all applicable UN-recommended performance tests, both the UN packaging certification marking and applicable drawing or container specification marking shall be applied. For use of the lower case "un" symbol, see 5.4.5.2.1.

5.4.5.1 DOT specifications. When the container complies with a DOT specification, the container must be marked as required by the applicable specification (see Title 49 CFR). This is normally the responsibility of the container manufacturer.

5.4.5.2 UN-recommended POP certification markings (see figures 50 and 51). When the container complies with the UN requirements, it shall be marked in accordance with ICAO technical instructions, IATA, IMO IMDG Code, and Title 49 CFR. Unless otherwise specified by the cognizant activity, these POP certification markings shall be placed on the opposite side of the shipping container from the side containing the identification markings. POP certification markings shall not be placed on the bottom of the container. In addition, the certification markings shall not be placed on the lid of a container with a removable head. For drums, the markings shall be placed on the upper two-thirds of the drum's surface.

5.4.5.2.1 UN symbol and size of lettering (see figures 50 and 51). The symbol "un" (lower case) shall be encircled, with the circle being sufficiently large enough to provide a minimum clear spacing around the "un" symbol. For embossed metal packagings, the capital letters UN may be applied as the symbol. The UN logo and other codes shall be in letters that are proportionate with the overall size of the container but shall be not less than 1/4-inch in height. The methods of marking shall be as specified in 5.1.8 and shall not interfere with or cause confusion with those markings which identify the contents or their hazardous nature. If the party responsible for ensuring that the UN recommendations have been met has a certification symbol, the certification symbol must be registered with the U.S. Department of Transportation, Associate Administrator for Hazardous Materials Safety. When the contractor packing the shipment does not have a DOT-registered symbol, then the name and address of the responsible party must be clearly marked on the container in lieu of a certification symbol.

Source: https://assist.dla.mil -- Downloaded: 2016-10-21T11:29Z
Check the source to verify that this is the current version before use.

The symbol "DOD" has been assigned to the U.S. Department of Defense and is so registered. It is only authorized for use by DOD activities as identified in DLAR 4145.41/AR 700-143/AFR 71-5/NAVSUPINST 4030.55/MCO 4030.40.

(u n) 1A1/Y1.4/100/92
USA/DOD

(u n)	the symbol used to CERTIFY that the packaging complies with UN recommendations for the item and packaging.
1A1	1 = drum (type of container) A = steel (material of construction) 1 = closed head (style of container)
Y	a letter designating the packing group for which the steel drum has been successfully tested. X is used for Packing Group I. Y is used for Packing Group II. Z is used for Packing Group III.
1.4	the maximum specific gravity of liquid HAZMAT that is authorized to be carried.
100	indicates kPa ((kilopascals) internal pressure differential) which container successfully maintained.
92	the last two digits of the year of manufacture.
USA	State (country) in which the container was certified.
DOD	the authorized symbol of the Department of Defense. The symbol of the party responsible for ensuring that the UN recommendations have been met shall be placed here. The appropriate symbol shall be the contractor's authorized symbol or as stated in the contract, order, purchase agreement, specification, special packaging instruction, or other written direction by the packaging design agency or by higher headquarters.

FIGURE 51. Example of UN packaging certification markings (for a steel drum).

Source: https://assist.dla.mil -- Downloaded: 2016-10-21T11:29Z
Check the source to verify that this is the current version before use.

5.4.5.2.2 Contractor's responsibilities. Unless otherwise stated in the procurement contract, contractors must certify the packagings themselves as meeting the UN performance requirements or must have the packagings certified by a DOT-approved testing facility. The contractor is also responsible for determining the use of the registered symbol of the contractor, packaging manufacturer, or the DOT-approved testing facility as part of the UN packaging certification markings. The contractor's certification symbol requirements shall be as specified in 5.4.5.2.1 herein.

5.4.5.3 Containers manufactured to a Government drawing, packaging drawing, or specification (see figure 50). When a container is manufactured to a Government-approved drawing or specification, it shall be identified as such. For example, this requirement is satisfied when a container has a MIL-STD-130 or equivalent name-plate or when it has the fiberboard box maker's certificate and statement of conformance to a Federal specification. This is normally the responsibility of the container manufacturer. When the complete package, including cushioning and blocking materials, inner container(s), and the shipping container, is covered by a detailed procedure in a specification or packaging drawing (shipping container drawing), the applicable specification or packaging drawing shall be marked on the container in an inconspicuous location, such as the bottom of the container. This additional marking need not be applied to containers with name-plates when the contents are specific to the container (e.g., an MK 46 Torpedo in an MK 535 container) or to packages when the entire packaged configuration is described by the NSN which is also part of the identification markings. These type containers may be used to ship HAZMAT domestically and internationally when the packaging has successfully passed all applicable UN-recommended performance tests or is covered by a Competent Authority Approval (CAA) and is so marked.

5.4.5.4 DOT exemptions. When a DOT exemption is applicable, the DOT exemption number (e.g., DOT E-7605) shall be placed near the PSN and any other required cautionary markings. Verification of an exemption and its requirements can be determined by writing to the Military Traffic Management Command (MTMC), 5611 Columbia Pike, Falls Church, VA 22041-5050, or by calling (202) 756-1951. DOT exemptions shall not apply to international shipments unless the HAZMAT is exempted from POP marking requirements.

5.4.5.4.1 DD Form 1387-2 used with DOT exemption 7573 or 9232. All shipments of biologicals, classified/protected materiel, and other materiel requiring special handling that are transported by military controlled aircraft or contract air carrier operating in accordance with DOT exemption 7573 or 9232 shall be labeled with a DD Form 1387-2. For information on the completion of this form, see 5.2.3 and figure 32.

Source: https://assist.dla.mil -- Downloaded: 2016-10-21T11:29Z
Check the source to verify that this is the current version before use.

5.4.5.5 Certification of Equivalency (COE). When a COE has been issued pursuant to AFMC 800-29/AMC-R 700-103/NAVSUP INST 4030.50/MCO 4030.39/DLAR 4145.37, the container certification number shall be applied near the PSN and any other cautionary markings. When specified by a joint regulation, this marking may be omitted. COEs shall not apply to international shipments unless the HAZMAT is exempted from POP marking requirements.

5.4.5.6 Competent Authority Approval. The competent authority, which is DOT, may provide an exemption CAA to international and domestic performance requirements. All requests for CAAs shall be documented as specified in Title 49 CFR and shall be submitted to the applicable service HAZMAT focal point. The service HAZMAT focal point shall ensure completion of the request for the CAA and shall submit the CAA request to the MTMC to be forwarded to DOT. The approved CAA number must appear on the shipping paper, in conjunction with the item description, with a copy of the CAA attached to the shipping paper.

5.4.5.7 Overpack/multipack containers. When the authorized packaging configuration has successfully passed the UN-recommended performance tests and the packaging is marked with the applicable UN packaging certification markings, and when military requirements specify overpacking of the packaging configuration in an outer container (placing a fiberboard box in a wood box), then the testing and subsequent marking of the outer container is unnecessary. In addition to the requirements specified in 5.4.2, conformance with UN recommendations shall be shown by marking the outer container with the words: "INNER PACKAGES COMPLY WITH PRESCRIBED SPECIFICATIONS." This marking, however, is not sufficient for combination packages consisting of overpacked inner packagings which contain liquids and are transported by aircraft. For all air shipments containing HAZMAT liquids, the outer container shall be marked with the words "AIR ELIGIBLE" to indicate that either the inner receptacles or the outer container meet the internal pressure requirements for air eligibility. Multipack containers comprised of performance-tested packagings shall also be marked with this information to certify conformance with UN recommendations. When two or more packages of compatible HAZMAT are placed within the same outside container or overpack, the outside container or overpack shall be labeled as required for each class of HAZMAT contained therein.

5.4.5.8 Pre-existing palletized unit loads of HAZMAT. For pre-existing palletized unit loads of HAZMAT that are in the DOD stockpile and are identified as having passed the POP testing requirements, the POP certification marking may be applied to two placards that shall be placed on two opposite sides of the pallet load in lieu of marking each container. This rule also applies to material having different DOT and UN PSNs. The markings shall be applied as specified in 4.4.7. Newly constructed palletized loads

Source: https://assist.dla.mil -- Downloaded: 2016-10-21T11:29Z
Check the source to verify that this is the current version before use.

shall be marked as specified herein and in the applicable modal regulation. If the load contains POP-certified containers and the POP certification markings are not visible on any container comprising the load, then the statement "INNER PACKAGES COMPLY WITH PRESCRIBED SPECIFICATIONS" shall be placed on the marking board or marking panel.

5.4.6 Documentation for hazardous materials. The shipper is responsible for the completion of a prescribed declaration form for each and every military air shipment containing dangerous goods, including hazardous materials. See the Joint Service Regulation AFR 71-4/TM 38-250/NAVSUP PUB 505/MCO P4030.19/DLAM 4145.3 for instructions on how to properly complete the form.

5.4.7 Flash point marking (see figure 52). All unit packs, intermediate containers, and exterior shipping containers packed with flammable liquids (flash point of not more than 141 degrees Fahrenheit (F) or 60.5 degrees Celsius (C)) shall be marked with the flash point of the material. For other than limited quantities, all shipments of flammable liquids shall have the UN Class 3 label placed on the identification-marked side of the shipping container. International shipments must contain the UN Class 3 label. The flash point shall be preceded by the words "FLASH POINT" and shall be followed by the letter "F" or "C," as appropriate. The flash point marking may be shown in degrees F, C, or both and shall be applied in a conspicuous location on the identification-marked side of the container. If space is not available on the identification-marked side, the required HAZMAT label(s) and the flash point marking may be placed on the opposite side. The size of the lettering shall be proportionate to the available marking space. The flash point shall be determined by using the testing methods prescribed in Title 49 CFR.

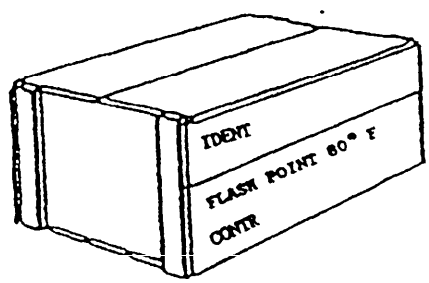

FIGURE 52. Flash point markings.

5.4.8 Specific hazards.

5.4.8.1 Asbestos (see figure 53). Containers of asbestos and products containing asbestos which may be expected to produce dust in excess of the Occupational Safety and Health Administration's (OSHA) exposure limits during handling, processing, storage,

Source: https://assist.dla.mil -- Downloaded: 2016-10-21T11:29Z
Check the source to verify that this is the current version before use.

disposal, or transportation shall be marked with a warning label, which shall be affixed to all raw materials, mixtures, scrap, waste, debris, and other products containing asbestos, tremolite, anthophyllites, or actinolite fibers or to their containers. The labels shall comply with the requirements specified in OSHA's Title 29 CFR, and they shall include the following information: "CAUTION: CONTAINS ASBESTOS FIBERS AVOID CREATING DUST. BREATHING ASBESTOS DUST MAY CAUSE SERIOUS BODILY HARM."

5.4.8.2 Polychlorinated biphenyls (PCBs) (see figure 53). As required by the Environmental Protection Agency (see Title 40 CFR), unit packs and intermediate containers, including containers that serve as shipping containers of waste PCB, shall have a PCB label affixed to them.

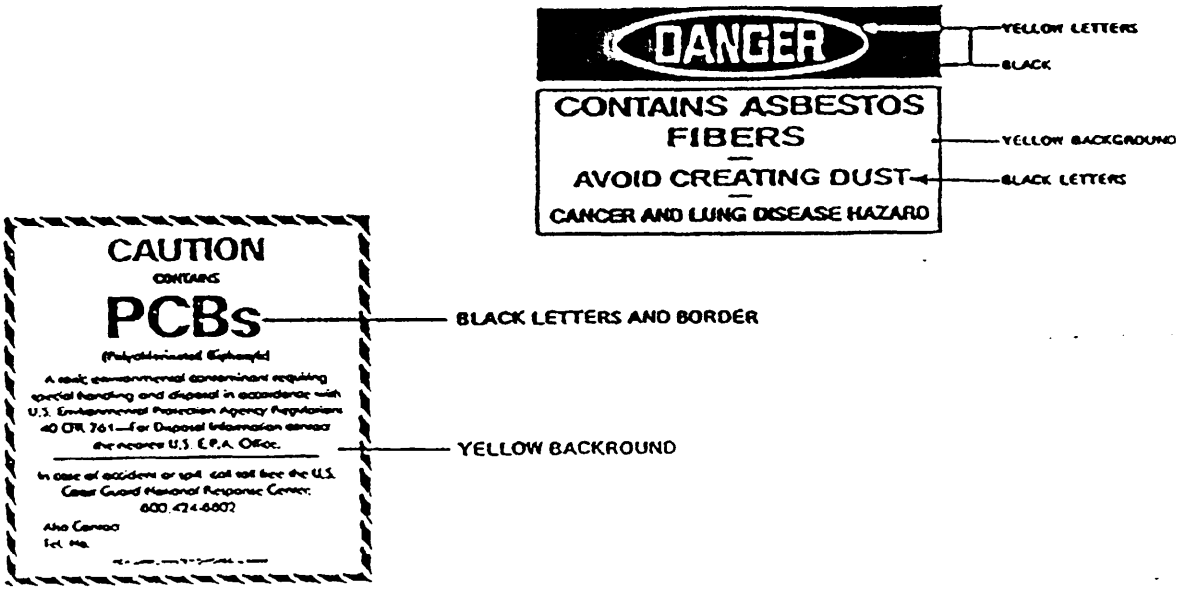

FIGURE 53. Asbestos and PCB hazardous labels.

5.4.9 Hazardous chemical warning labels (see figure 54). DOD installations are not required to relabel hazardous chemicals that are received from commercial suppliers with a DD Form 2521 (Hazardous Chemical Warning Label) when those hazardous chemical containers are already labeled by the supplier in accordance with the Hazard Communications Standard. However, when a hazardous chemical container is received from a contractor without the applicable warning label(s) applied, then the hazardous chemical container (unit pack or unit container, including aerosols) shall have a completed DD Form 2521 affixed to it in accordance with DOD 6050.5H. If a container includes more than one unit pack, such as a container of six aerosol cans that have a unit of issue of "one each," then a DD Form 2521 shall not be applied to the individual unit packs (each aerosol can) that comprise the container until the container itself is opened.

Source: https://assist.dla.mil -- Downloaded: 2016-10-21T11:29Z
Check the source to verify that this is the current version before use.

HAZARDOUS CHEMICAL WARNING LABEL

1. CHEMICAL / COMMON NAME 9637, Alkanex	2. HAZARD CODE
3. NSN / LSN 5970-00-161-7232	4. PART NUMBER 9637 Alkanex
5. ITEM NAME Insulating Varnish	

6. HAZARDS (X all that apply)	(1) Acute (Immediate)				(2) Chronic (Delayed)
	NONE	SLIGHT	MODERATE	SEVERE	
a. HEALTH			X		X
b. CONTACT				X	
c. FIRE				X	
d. REACTIVITY		X			

7. SPECIFIC HAZARDS AND PRECAUTIONS (Including Target Organ Effects)

WARNING!

Acute: Irritation of skin, eyes, mucous membranes. Drying, defatting of skin. Ingestion may cause severe damage to gastrointestinal tract. Avoid breathing vapors. Keep away from heat, sparks, and flame.
Chronic: Contains a suspected mutagen. Contains a suspected teratogen. Blood and reproductive disorders may occur; eye, liver, kidney, and central nervous system damage may occur.

(See MSDS for further information)

8. PROTECT (X all that apply)	X	a. EYES	X	b. SKIN	X	c. RESPIRATORY

9. CONTACT a. COMPANY NAME
ABC Chemical Company

b. ADDRESS (Street, P.O. Box, City, State, Zip Code, and Country)
10 Elm Street, Anytown, NY 55515

c. EMERGENCY TELEPHONE NUMBER (Include Area Code)
(555) 810-1010

10. PROCUREMENT YEAR FOR HAZARDOUS CHEMICAL

DD Form 2521, DEC 88

FIGURE 54. DD Form 2521 (Hazardous Chemical Warning Label).

Source: https://assist.dla.mil -- Downloaded: 2016-10-21T11:29Z
Check the source to verify that this is the current version before use.

5.4.10 Kits containing HAZMAT. Kits that contain hazardous components in small quantities such as adhesives, solvents, inks, paints, and other flammable liquids shall be marked and labeled in accordance with the requirements specified herein. When more than one component is classified as a HAZMAT, the container shall be marked and labeled in accordance with 5.4.2. The UN packaging specification markings are not required when the individual kits meet the requirements of Title 49 CFR, 173.4, and the applicable modal requirements.

5.4.11 Radioactive material marking and labeling requirements. Radiation is the emission and transfer of energy through space or through a material medium. Containers of radioactive materials prepared for shipment shall be marked and labeled in accordance with applicable sections of Title 49 CFR, applicable international document (e.g., ICAO, IMO, etc.), and as specified herein. The applicable radioactive HAZMAT classification warning labels shall be applied on the two opposite sides of the shipping container for domestic and international shipments. The applied radioactive label must have the following information entered in the blank spaces on the label in accordance with Title 49 CFR:

a. Contents. The name of the radionuclides.

b. Number of curies, expressed in appropriate curie units.

c. Transport index. A dimensionless number (rounded up to the first decimal place) which designates a degree of control to be exercised by the carrier during transportation. It applies to radioactive materials requiring radioactive II or III labels only.

5.4.11.1 Nuclear Regulatory Commission (NRC) interior/storage container label (see figure 55). All containers of radioactive materials in storage and unit packs and intermediate containers that are packed for shipment and require labeling shall be labeled in accordance with Title 10 CFR and as specified herein. The NRC labels shall be applied to the identification-marked side of the unit pack or intermediate container and shall bear the radiation caution symbol and the words "CAUTION: RADIOACTIVE MATERIAL" or the words "DANGER: RADIOACTIVE MATERIAL," as appropriate. They shall also include relevant information such as radiation levels, kinds of material, estimate of activity, estimated activity date, and mass enrichment. The label size shall be a minimum of 2 by 2 inches but may be larger to accommodate larger packages. When a container of radioactive material that has the NRC label affixed to it is used as the outermost container during shipment and is packaged and labeled as specified in Title 49 CFR, the NRC label shall be removed prior to shipment to preclude any confusion for

Source: https://assist.dla.mil -- Downloaded: 2016-10-21T11:29Z
Check the source to verify that this is the current version before use.

personnel transporting or receiving the container. Once the container is received, the proper NRC label must again be affixed to it. Exceptions to the use of the NRC interior/storage container label are contained in 5.4.11.4. Information on the label is required by Title 10 CFR and as restated in this standard. These interior/storage container labels may be either locally produced or procured. However, they must contain all the information required for each radioactive material.

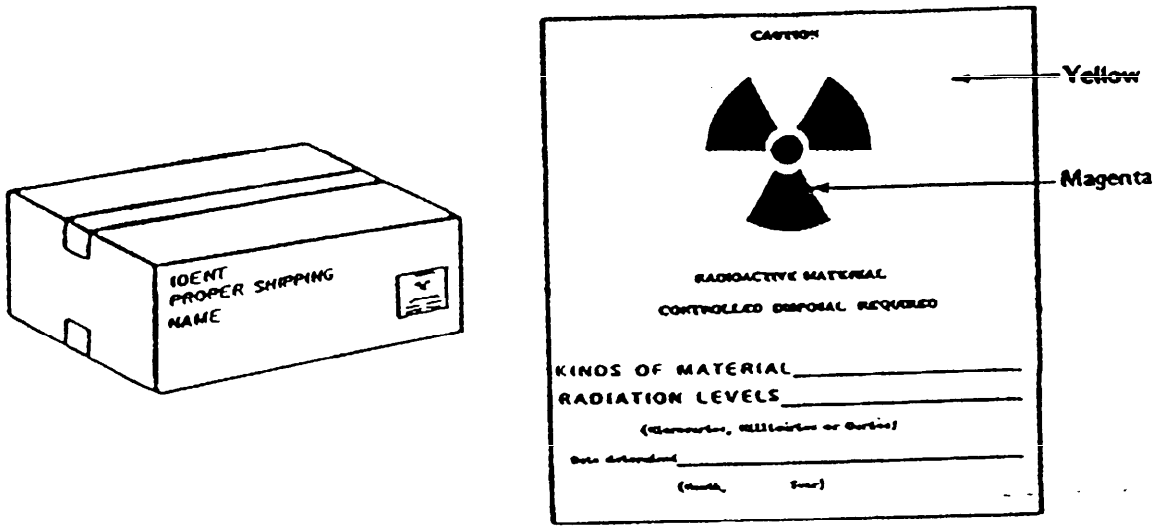

FIGURE 55. NRC interior/storage container label.

5.4.11.2 Radioactive materials requiring an NRC label. Any commodity or item containing radioactive material in excess of the amounts shown in Title 10 CFR, part 20, appendix C, require an NRC label. Radionuclides other than those listed in Title 10 CFR or mixtures of beta emitters of unknown composition also require an NRC label.

5.4.11.3 Transportation of radioactive materials. Shipping containers of radioactive material shall be marked and labeled as specified in Title 49 CFR for domestic shipments, applicable international documents such as the ICAO or IMO for international shipments, or the AFR 71-4/TM 38-250/NAVSUP PUB 505 (REV)/MCO P4030.19/DLAM 4145.3 for military air shipments. When shipping in accordance with the DOT regulations, the NRC interior/storage container label shall be obliterated from the outermost shipping container prior to shipment.

Source: https://assist.dla.mil -- Downloaded: 2016-10-21T11:29Z
Check the source to verify that this is the current version before use.

5.4.11.4 Exceptions to the use of radioactive material labels. When determining the appropriate radioactive material labels to be applied to containers in storage and to those being prepared for shipment, the following exception data must be considered. The NRC interior/storage container label is not required for limited quantities of radioactive materials and devices and low specific activity radioactive devices specified in Title 49 CFR, part 173; for materials that are processed in accordance with the general license provision of Title 10 CFR, parts 31 and 40; when exempted by the provisions of Title 10 CFR; when alternate markings are authorized by the NRC in a specific license; or when materials are otherwise exempted by Federal regulations. Any outer package that contains radioactive material need not be labeled in accordance with the provisions in Title 10 CFR, part 20, if the package is in transport or is ready for transport, and the packaging/labeling/marking is in accordance with the DOT regulations (i.e., Title 49 CFR, part 173). Radioactive hazardous warning labels are not required for manufacturing or processing equipment such as nuclear reactors, their components, piping, and tanks or when packages are exempt from DOT labeling under Title 49 CFR, 173.421, 173.422, 173.424, or 173.425; when specific exemptions are granted by DOT; and as specified in AFR 71-4/TM 38-250/NAVSUP PUB 505(REV)/MCO P4030.19/DLAM 4145.3. Additional radiation marking requirements that are contained in Title 49 CFR, 172.310, for packages of radioactive material that are not exempt from marking requirements must also be applied.

Source: https://assist.dla.mil -- Downloaded: 2016-10-21T11:29Z
Check the source to verify that this is the current version before use.

TABLE III. Supply-type labels

NOTE 1. OF 78 (Caution-Magnetic Equipment (50 ft)) and OF 85 (Fragile-Magnetic Tape) are no longer available from the General Services Administration (GSA). The labels, as shown in figure 36, may be applied by stenciling or may be locally produced or procured.

NOTE 2. Use existing supplies of OF's 87, 87A, and 88 until they are exhausted or until 31 December 1993, whichever comes first. OF numbers and NSNs for the new ESD Sensitive Devices labels discussed in 5.2.23 will be requested upon implementation of MIL-STD-129M. At that time, OF's 87, 87A, and 88 will be canceled.

Optional Form	Title	Size (in inches)	NSN
70A	Fragile (gummed)	2 1/2 by 2 1/2	7540-00-559-2335
71A	Fragile (gummed)	4 by 4	7540-00-559-2337
73	Method II Package	2 1/2 by 1	7540-00-139-4738
74	Method II Package	6 by 2 1/2	7540-00-139-4752
80	999	2 by 2	7540-00-139-4831
81	999	4 by 4	7540-00-139-4832
83	NMCS	3 by 1 1/2	7540-00-139-4834
84	NMCS	3 by 5	7540-00-139-4835
87	Caution-Sensitive Electronic Devices	2 by 2	7540-01-109-8815
87A	Caution-Sensitive Electronic Devices	4 by 4	7540-01-110-4906
88	Caution-Sensitive Electronic Devices	2 by 5/8	7540-01-317-7371
274	Equipment Warranty	3 by 2	7540-01-044-7185

Source: https://assist.dla.mil -- Downloaded: 2016-10-21T11:29Z
Check the source to verify that this is the current version before use.

TABLE IV. Shelf-life codes

NOTE: Tables IV and V are for information only and shall not be quoted as official SLC requirements. The official tables are contained in DOD 4140.27-M.

Shelf-Life Period	Type I	Type II	Required Number of Months Shelf-Life Remaining Upon Receipt by the Government
Nondeteriorative	0	0	N/A
1 Month	A	N/A	1
2 Months	B	N/A	2
3 Months	C	1	3
4 Months	D	N/A	3
5 Months	E	N/A	4
6 Months	F	2	5
9 Months	G	3	8
12 Months	H	4	10
15 Months	J	N/A	13
18 Months	K	5	15
21 Months	L	N/A	18
24 Months	M	6	21
27 Months	N	N/A	23
30 Months	P	N/A	26
36 Months	Q	7	31
48 Months	R	8	41
60 Months	S	9	51*
Medical items, parachutes, and Individual Repair Parts Ordering Data (IRPOD) items with a shelf-life period of greater than 60 months.	X	X	Variable based on the shelf-life months*

*No more than 12 months expended for elastomeric items of supply.

Source: https://assist.dla.mil -- Downloaded: 2016-10-21T11:29Z
Check the source to verify that this is the current version before use.

TABLE V. Application of supply condition codes to shelf-life items

CODE	TITLE	DEFINITION
A	SERVICEABLE (ISSUABLE WITHOUT QUALIFICATION)	Shelf-life remaining is more than 6 months.
B	SERVICEABLE (ISSUABLE WITH QUALIFICATION)	Shelf-life remaining is from 3 to 6 months.
C	SERVICEABLE (CUSTOMER CONCURRENCE REQUIRED PRIOR TO ISSUE)	Shelf-life remaining is less than 3 months.
E	UNSERVICEABLE (LIMITED RESTORATION)	Materiel which involves limited expense or effort to restore to a serviceable condition and which is accomplished in the Storage Activity (SA) where the stock is located.
G	UNSERVICEABLE (INCOMPLETE)	Materiel requiring additional parts or components to complete the end item prior to issue.
H	UNSERVICEABLE (CONDEMNED)	Type I shelf-life materiel that has passed the expiration date and Type II shelf-life materiel that has passed its inspection or test date and cannot be extended.
J	SUSPENDED (IN STOCK)	Type II shelf-life materiel that has reached the inspection or test date and is awaiting inspection, test, or restoration.

Source: https://assist.dla.mil -- Downloaded: 2016-10-21T11:29Z
Check the source to verify that this is the current version before use.

TABLE V. Application of supply condition codes to shelf-life items - Continued.

CODE	TITLE	DEFINITION
K	SUSPENDED (RETURNS)	Materiel returned from customers or users and awaiting condition classification.
L	SUSPENDED (LITIGATION)	Materiel held pending litigation or negotiation with contractors or common carriers.
R	SUSPENDED (RECLAIMED ITEMS, AWAITING CONDITION DETERMINATION)	Assets turned in by reclamation activities which do not have the capability (e.g., skills, manpower, or test equipment) to determine the materiel condition. The actual condition will be determined prior to induction into maintenance activities for repair/modification.

Source: https://assist.dla.mil -- Downloaded: 2016-10-21T11:29Z
Check the source to verify that this is the current version before use.

TABLE VI. Hazardous materials classification warnings

NOTE 1. Except for Standard Form (SF) 420A, the hazardous warning labels listed below are no longer available from GSA and must be locally procured.

NOTE 2. SF 420A is still available from GSA. For import and export shipments, use the Class 6 (Poison B) label.

United Nations Class	Title (DOT Classifications)
1	Explosive A
1	Explosive B
1	Explosive C
2	Nonflammable Gas
2	Flammable Gas
3	Flammable Liquid
4	Flammable Solid
5	Oxidizer
5	Organic Peroxide
2 or 6	Poison Gas (Poison A)
6	Poison (Poison B)
6	Irritant (Irritating material)
6	Irritant (w/skull) (Import and Export)

United Nations Class	Title (DOT Classifications)
7	Radioactive I (material)
7	Radioactive II (material)
7	Radioactive III (material)
8	Corrosive (material)
-	Empty
4	Spontaneously Combustible (material)
4	Dangerous When Wet (Water Reactive Material)
-	SF 420A (note 2) Etiologic Agents Biomedical Material for Domestic Shipments
-	Cargo Aircraft Only

Source: https://assist.dla.mil -- Downloaded: 2016-10-21T11:29Z
Check the source to verify that this is the current version before use.

6. NOTES

THIS SECTION IS NOT APPLICABLE TO THIS STANDARD.

Source: https://assist.dla.mil -- Downloaded: 2016-10-21T11:29Z
Check the source to verify that this is the current version before use.

INDEX

SUBJECT	PARAGRAPH(S)	PAGE(S)
Abbreviations and acronyms	3.1, 4.1, 5.1.8	8, 18, 66
Acrylic coating compound	5.1.1.1	64
Address markings	3.6, 3.7, 3.36, 3.37, 3.39, 3.45, 3.54, 4.3-4.3.7	10, 14, 15, 16, 24-32
Advertising matter	5.1.6	66
Agency for International Development	5.2.6	72
Air and water shipments of hazardous materials	5.4.3, 5.4.6, 5.4.11.3	94, 100, 104
Ammunition and explosives	4.7.1	63
Applicability	1.2	1
Arrows (UP/TOP)	4.2.2.1.2 Note 5, 5.2.7	22, 72
Asbestos	5.4.8.1	100
Assembly	3.2	10
Automated packing list	5.3.1.4, 5.3.2-5.3.2.6	86, 87-89
Axle weight markings	5.2.22	80
Bags	4.4.3, 4.5.3.5	34, 56
Bales	4.4.2, 4.5.3.5	34, 56
Bar code character density	4.5.1.3	44
Bar code configurations and formats	4.5.1.4-4.5.1.6, 4.5.3.3-4.5.3.4	45-48, 54-55

Source: https://assist.dla.mil -- Downloaded: 2016-10-21T11:29Z
Check the source to verify that this is the current version before use.

INDEX--Continued

SUBJECT	PARAGRAPH(S)	PAGE(S)
Bar code label composition	4.5.1.9-4.5.1.10	49
Bar code markings	3.3, 4.3.2.2-4.3.2.2.1, 4.5-4.5.3.17.2, 5.3.2.7-5.3.2.8	10, 31, 44-60, 89-91
Bar code symbology	4.5.1, 5.3.2.8	44, 90
Barrels	4.4.4, 4.5.3.6, 4.5.3.6.1	35, 56, 57
Batch number	3.25, 5.2.14	13, 76
Boxes	4.4.1, 4.5.3.1	33, 51
Center of balance	5.2.20	79
Certificate of Conformance	4.5	44
Certification of Equivalency	5.4.5.5	99
Classified items	3.41.1, 4.2.2.3, 4.5.3.14, 5.2.3, 5.3.3b, 5.4.6	14, 23, 59, 71, 92, 100
Cloth-covered bundles	4.4.2, 4.5.3.5	34, 56
Clothing and textile items	4.2.2.4, 4.2.3c, 4.4.7b, 4.5.1.2, 4.5.3.14	23, 24, 39, 44, 59
Cognizant activity	3.4, 5.1.1	10, 64
Coils of wire	4.4.5, 4.5.3.5.1	37, 56
Color of markings	5.1.7	66
Commercial and Government Entity (CAGE) Code	3.5, 4.2.1b, 4.2.2b, 4.5.1.2, 4.5.3.1, 4.5.3.3, 4.5.3.4	10, 19, 20, 44, 51, 54, 55
Competent Authority Approval	5.4.5.6	99

Source: https://assist.dla.mil -- Downloaded: 2016-10-21T11:29Z
Check the source to verify that this is the current version before use.

INDEX--Continued

SUBJECT	PARAGRAPH(S)	PAGE(S)
Computer-generated forms	5.3.2.9	92
Condition of surfaces to be marked	5.1.6	66
Consignee (receiver)	3.6, 4.3.1c, 4.3.2.1a(9)&b(9)	10, 25, 28, 29
Consignor (shipper)	3.7, 4.3.1b, 4.3.2.1a(3)&b(3)	10, 25, 27, 28
Consolidation container	3.8, 5.2.2a, 5.2.17	11, 70, 78
Contract data markings	4.2, 4.2.3, 5.1.10	18, 23, 68
Contract Line Item Number	3.9, 4.5.1.2, 4.5.3.1-4.5.3.1.1, 4.5.3.3, 4.5.3.4	11, 44, 51-52, 54, 55
Contract number or purchase order number	3.10, 4.2.1e, 4.2.3a, 4.5.1.2, 4.5.3.1-4.5.3.1.1, 4.5.3.3, 4.5.3.4	11, 19, 24, 44, 51-52, 54, 55
Contractor- or vendor-originated address markings	4.3.1, 4.3.3	24, 32
Contractor's responsibilities	5.4.5.2.2	98
Controlled items	3.41.2, 4.2.2.3, 4.5.3.14, 5.3.3b	14, 23, 59, 92
Crates	4.4.1, 4.5.3.1	33, 51
Cube	4.2.2.2, 4.3.1e, 4.3.2.1a(12)&b(12), 5.1.8	22, 25, 28, 29, 66
Cured date	3.49.2, 5.2.1	16, 68

Source: https://assist.dla.mil -- Downloaded: 2016-10-21T11:29Z
Check the source to verify that this is the current version before use.

INDEX--Continued

SUBJECT	PARAGRAPH(S)	PAGE(S)
Cylindrical containers	4.4.4, 4.5.3.6, 4.5.3.6.1, 5.2.2b	35, 56, 57, 71
Data bar coded on DD Forms 1348-1/-1A	5.3.2.7-5.3.2.8	89-90
Data bar coded on DD Form 1387	4.3.2.2-4.3.2.2.1	31
Date assembled	3.11, 3.49.1, 5.2.1	11, 16, 68
Date packed	3.12, 4.2.1f, 4.2.2e, 4.2.2.1.2, 4.4.3, 5.2.1	11, 19, 20, 22, 34, 68
Defense Transportation System	3.13, 4.3.1	11, 24
Definitions	3.1-3.58	8-17
Direct mail pouch shipment	4.3.5	32
Documentation for hazardous materials	5.4.6	100
Documentation that accompanies shipments	5.3-5.3.3	84-92
DOD shipments sent through the U.S. Postal service	4.3.4	32
DOD Single Line Item Release/Receipt Document (DD Form 1348-1)	4.5, 5.3.2-5.3.3	44, 87-92
DOT exemptions	5.4.5.4, 5.4.5.4.1	98
DOT specifications	5.4.5.1	96
Drugs	3.41.2, 4.2.2.3, 5.2.1, 5.2.5, 5.3.3b	14, 23, 68, 71, 92

Source: https://assist.dla.mil -- Downloaded: 2016-10-21T11:29Z
Check the source to verify that this is the current version before use.

INDEX--Continued

SUBJECT	PARAGRAPH(S)	PAGE(S)
Drums	4.4.4, 4.5.3.6, 4.5.3.6.1	35, 56, 57
Durability of markings	5.1.7	66
Electrostatic Discharge Sensitive devices	3.14, 5.2.23	11, 81
Embossing	5.1.1.4, 5.1.3, 5.1.8	64, 65, 66
English-metric conversion	1.3, Tables I and II	1-3
Equipment with battery	5.2.19	79
Exceptions, exemptions, and additions	1.2.1	1
Expiration date	3.49.3, 5.2.1	16, 68
Export permit number	5.2.15	76
Exterior (shipping) container identification, contract data, and address markings	3.15, 3.52, 4.2, 4.2.2-4.2.3, 5.1.10, 5.4.2	11, 16, 18, 20-23, 68, 94
Exterior documentation exceptions	5.3.3	92
Flash point markings	5.4.7	100
Foreign military sales	3.46, 4.2.2.1.2 Note 4, 4.3.2.1a(13)&(15)&b(15), 4.6, 5.3.2.3-5.3.2.5, 5.3.3	15, 22, 28, 29, 60, 88-89, 92
Format of DD Form 1387	4.3.2.1	27
Fragile/delicate label	4.2.2.1.2 Note 5, 5.2.7	22, 72
Full carload/full truckload shipments	4.3.6	32

Source: https://assist.dla.mil -- Downloaded: 2016-10-21T11:29Z
Check the source to verify that this is the current version before use.

INDEX--Continued

SUBJECT	PARAGRAPH(S)	PAGE(S)
Gross weight	4.2.2.1-4.2.2.2, 4.3.2, 4.3.2.1a(10)&b(10), 4.4.7, 5.1.8	21-22, 26, 28, 29, 38, 66
Hand printing	4.3.2, 5.1.8	26, 66
Hardness Critical Item	3.16, 5.2.25	11, 84
Hazardous chemical warning labels	5.4.9	101
Hazardous materials	3.17, 4.2.2g, 4.7.4, 5.4-5.4.11.4, Table VI	12, 21, 63, 93-105, 110
Household goods	4.7.8	63
Human-readable interpretation	3.18, 4.3.2.2.1, 4.5.1, 4.5.3.14, 5.3.2.7	12, 31, 44, 59, 89
Identification control number	3.25	13
Identifying containers and packagings of hazardous materials	5.4.5-5.4.5.8	96-99
Identification markings on exterior containers	4.2, 4.2.2-4.2.2.4	18, 20-23
Identification markings on unit packs, intermediate containers, and unpacked items	4.2-4.2.1	18-19
Identification number for hazardous materials	4.2.2g, 5.4.2	21, 94
Inspection/test date	3.49.4, 5.2.1	16, 68
Issue Release/Receipt Document (DD Form 1348-1A)	4.5, 5.3.2-5.3.3	44, 87-92

Source: https://assist.dla.mil -- Downloaded: 2016-10-21T11:29Z
Check the source to verify that this is the current version before use.

INDEX--Continued

SUBJECT	PARAGRAPH(S)	PAGE(S)
Item description (nomenclature)	3.21, 4.2.1c, 4.2.2c, 4.2.2.3-4.2.2.4	12, 19, 20, 23
Kits	3.22, 4.2.2.1.1, 4.5.3.12, 5.2.16-5.2.16.2, 5.3.1-5.3.1.6, 5.4.10	12, 21, 59, 77-78, 85-87, 103
Label adhesive	5.1.1.1, 5.1.8.3.1, 5.1.8.3.3	64, 67
Labels	5.1.2-5.1.2.1, 5.1.8.3-5.1.8.3.3, 5.1.10, 5.4.9, Table III	64-65, 67, 68, 101, 106
Legibility of markings	5.1.7	66
Less than carload/ less than truckload	4.3.6	32
Levels of packing	3.23.2	12
Levels of preservation	3.23.1, 3.27	12, 13
Levels of protection	3.23, 4.2.1f, 4.2.2e, 4.2.2.1.1-4.2.2.1.2	12, 19, 20, 21-22
Lift points	5.2.20, 5.2.21	79, 80
Lithographing	5.1.1.4, 5.1.3, 5.1.8	64, 65, 66
Load bearing area	5.2.21	80
Loose or unpacked item markings	3.24, 4.2.1, 4.2.1.1, 4.4.5, 4.4.6, 4.5.3.10, 5.2.2c	13, 18, 20, 37, 38, 59, 71
Lot, batch, or identification control number	3.25, 5.1.8, 5.2.14	13, 66, 76
Machine printing	4.3.2, 5.1.8, 5.1.8.2	26, 66

Source: https://assist.dla.mil -- Downloaded: 2016-10-21T11:29Z
Check the source to verify that this is the current version before use.

INDEX--Continued

SUBJECT	PARAGRAPH(S)	PAGE(S)
Magnetic equipment and tape	5.2.10-5.2.11	74-75
Manufactured date	3.49.5, 5.2.1	16, 68
Manufacturer	3.26	13
Marking board/ marking panel	4.3.3, 4.4.1, 4.4.7, 4.5.3.1, 4.5.3.9, 5.1.9	32, 33, 38, 51, 58, 67
Marking materials	5.1-5.1.5	64-65
Markings	5.1-5.1.10	64-68
Material condition markings	5.2.24	83
Materiel destined for resale	4.5.3.13	59
Medical material	4.7.2	63
Method II marking	5.2.9	74
Methods of applying bar codes	4.5.1.7	48
Methods of marking	5.1.8-5.1.8.3.3	66-67
Military shipment label (DD Form 1387)	4.3.2-4.3.3	26-32
MILVAN/SEAVAN	4.4.10, 5.2.2f, 5.2.20	42, 71, 79
Modification work order	3.28, 5.2.12	13, 75
Multipacks	4.2.2.1.2, 4.5.3.11, 5.3.2.2, 5.4.2, 5.4.5.7	22, 59, 87, 94, 99
National/NATO Stock Number	3.29, 4.2.1a, 4.2.2a, 4.5.1.1-4.5.1.2, 4.5.2, 4.5.3.11a	13, 18, 20, 44, 50, 59
NATO shipment markings	4.7.5	63

Source: https://assist.dla.mil -- Downloaded: 2016-10-21T11:29Z
Check the source to verify that this is the current version before use.

INDEX--Continued

SUBJECT	PARAGRAPH(S)	PAGE(S)
Not Mission Capable Supply label	5.2.18	78
Nuclear Regulatory Commission label	5.4.11.1-5.4.11.4	103-105
Obliterating lacquer, enamel, or paint	5.1.1.3, 5.1.6	64, 66
Omission of markings on shipping containers	4.2.2.3-4.2.2.4, 4.5.3.14, 5.2.5	23, 59, 71
Optional forms	5.2, Table III	68, 106
Overpacks/multipacks of HAZMAT	5.4.5.7	99
Packaging	3.30	13
Packing	3.31	13
Packing list	5.3.1-5.3.1.6	85-87
Packing list protectors	5.1.5, 5.3.2.1-5.3.2.2	65, 87
Palletized unit loads	3.32, 4.4.7, 4.5.3.9, 5.4.5.8	13, 38, 58, 99
Paper- and cloth-wrapped rolls	4.4.5, 4.5.3.8	37, 58
Parcel post	3.33, 4.3.4, 4.3.5, 4.4, 5.3.2.5	13, 32, 89
Part number	4.2.1b, 4.2.2b	19, 20
Performance-oriented packaging markings	3.34, 4.2.2g, 5.4.1, 5.4.5-5.4.5.8	14, 21, 93, 96-99
Petroleum products	4.7.6	63
Pilferable items	3.41.3, 4.2.2.3, 4.5.3.14, 5.2.5, 5.3.3b	14, 23, 59, 71, 92

Source: https://assist.dla.mil -- Downloaded: 2016-10-21T11:29Z
Check the source to verify that this is the current version before use.

INDEX--Continued

SUBJECT	PARAGRAPH(S)	PAGE(S)
Placement of bar codes on exterior containers	4.5.3-4.5.3.17	51-60
Placement of identification and bar code markings on unit packs and intermediate containers	4.2.1.1, 4.5.2, 4.5.2.2	20, 50
Placement of identification, contract data, and address markings on exterior containers	4.3.3, 4.4-4.4.13	32-43
Polychlorinated biphenyls	3.35, 5.4.8.2	14, 101
Port of debarkation	3.36, 4.3.2.1a(7)&b(7)	14, 28, 29
Port of embarkation	3.37, 4.3.2.1a(5)&b(5)	14, 27, 29
Precautionary marking and labeling of hazardous materials by other statutes or regulations	5.4.4	95
Preservation	3.38, 4.2.1f, 4.2.2e	14, 19, 20
Printing	4.3.2, 4.4.4, 4.5.1.7, 5.1.3, 5.1.8, 5.1.8.2	26, 35, 48, 65, 66
Project code	3.39, 4.3.1d, 4.3.2.1a(8)&b(8), 5.2.2	14, 25, 28, 29, 70
Proper shipping name	3.40, 4.2.2g, 5.4.2	14, 21, 94
Protected cargo	3.41, 4.2.2.3, 4.5.3.14, 5.2.5, 5.3.3b	14, 23, 59, 71, 92
Protective coating	4.5.1.10, 5.1.1.1, 5.1.2.1, 5.1.8.3.3	49, 64, 65, 67

Source: https://assist.dla.mil -- Downloaded: 2016-10-21T11:29Z
Check the source to verify that this is the current version before use.

INDEX--Continued

SUBJECT	PARAGRAPH(S)	PAGE(S)
Quantity and quantity per unit pack	3.42, 3.43, 4.2.1d, 4.2.2d	15, 19, 20
Radioactive material	3.44, 5.4.11-5.4.11.4	15, 103-105
Reels and rods	4.4.5, 4.5.3.7	37, 58
Referenced documents	2.1-2.3	4-7
Regional Freight Consolidation Center shipments	4.3.7	32
Related item markings	4.2.2.1.1	21
Required delivery date	3.45, 4.3.2.1a(11)& b(11), 5.2.18	15, 28, 29, 78
Sacks	4.4.3, 4.5.3.5	34, 56
Security assistance	3.46	15
Sensitive items	3.41.4, 4.2.2.3, 4.5.3.14, 5.3.3b	15, 23, 59, 92
Serial number	3.47, 4.5.2.2, 4.5.3.2, 5.1.8, 5.2.13	15, 50, 53, 66, 76
Set markings	3.48, 5.2.16-5.2.16.2, 5.3.1.1	15, 77-78, 85
Sets, kits, and outfits	4.5.3.12	59
Shelf-life markings and shelf-life codes	3.49-3.51, 4.2.2.1.2 Note 1, 5.2.1, Tables IV & V	15-16, 22, 68, 107-109
Shipping container	3.52	16
Size of DD Form 1387	4.3.2.3	31
Size of markings	5.1.10, 5.4.5.2.1	68, 96
Sling point	5.2.20	79

Source: https://assist.dla.mil -- Downloaded: 2016-10-21T11:29Z
Check the source to verify that this is the current version before use.

INDEX--Continued

SUBJECT	PARAGRAPH(S)	PAGE(S)
Small arms weapons containers	4.5.3.17-4.5.3.17.2	60
Spar varnish	5.1.1.1, 5.1.8.3.1	64, 67
Special Handling Data/ Certification (DD Form 1387-2)	5.2.3	71
Special markings	4.2.2.1.2 Notes 1-5, 5.2-5.2.25, 5.4.1, 5.4.3, 5.4.5.2, 5.4.7-5.4.9	22, 68-84, 93, 94, 96, 100-101
Spools	4.4.5, 4.5.3.7	37, 58
Stamping	3.53, 4.3.2, 5.1.1.4, 5.1.3, 5.1.8, 5.1.8.3.1	16, 26, 64, 65, 66, 67
Stenciling	4.3.2, 5.1.1.2, 5.1.3, 5.1.8-5.1.8.1	26, 64, 65, 66
Stencil ink	5.1.1.2	64
Structural markings	5.2.4	71
Subsistence markings	4.7.3	63
Tags	4.3.2, 4.3.3, 4.5.3.3, 4.5.3.4, 5.1.3, 5.1.8, 5.1.10	26, 32, 54, 55, 65, 66, 68
Tape	4.5.1.10, 5.1.1.1, 5.1.4, 5.1.8.3.3, 5.3.1.6	49, 64, 65, 67, 87
Tires	4.4.11, 4.5.3.16, 4.7.9	43, 60, 63
Transportation Control Number	3.54, 4.3.2.1a(1)&b(1), 4.3.2.2	16, 27, 28, 31
Transportation Priority	4.3.2, 4.3.2.1a(6)&b(6)	26, 27, 29

Source: https://assist.dla.mil -- Downloaded: 2016-10-21T11:29Z
Check the source to verify that this is the current version before use.

INDEX--Continued

SUBJECT	PARAGRAPH(S)	PAGE(S)
Transportation special handling/protective services	5.2.3	71
Transport Index	5.4.11c	103
Tubular products	4.4.12, 4.4.13	43
Unfabricated steel mill products	4.7.7	63
Unitization	3.55	17
Unit of issue	3.56-3.56.3, 4.1, 4.2.1d, 4.2.2d	17, 18, 19, 20
Unit pack markings	3.57, 4.2-4.2.1, 4.5.1.1, 5.4.9	17, 18-19, 44, 101
Unpacked major equipment	4.4.6, 4.5.3.10, 5.2.2d	38, 59, 71
Unpacked vehicles	4.4.9, 5.2.2d	42, 71
Unrelated item markings	4.2.2.1.2	22
UN symbol	5.4.5.2.1	96
Use of labels	5.1.8.3.1	67
Valuable and security items	4.2.2.3, 5.2.5	23, 71
Warranty markings	3.58, 4.2.2.1.2 Note 2, 5.2.8	17, 22, 73
Waterproofing materials	5.1.1.1, 5.1.2.1, 5.1.8.3.3	64, 65, 67
Water-resistant envelopes	5.1.4, 5.3.1.5, 5.3.2.1-5.3.2.6	65, 86, 87-89
Wood products	4.4.8-4.4.8.3, 4.5.1.8, 4.5.3.15	40-41, 48, 59

Source: https://assist.dla.mil -- Downloaded: 2016-10-21T11:29Z
Check the source to verify that this is the current version before use.

CONCLUDING MATERIAL

Custodians:
Army - SM
Navy - SA
Air Force - 69
DLA - DH

Preparing activity:

Army - SM

(Project PACK-0981)

Review activities:
Army - AL, AM, AR, AT, AV, CR, EA, GL, ME, MI, MR, MT, TM
Navy - AS, CG, EC, MC, MS, OS, SH, TD, YD
Air Force - 11, 70, 71, 80, 82, 84, 99
DLA - CS, CT, DM, ES, GS, IS, PS, SS

Review and user information is current as of the date of this document. For future coordination of changes to this document, draft circulation should be based on the information in the current Federal Supply Classification Listing of DOD documents.

Source: https://assist.dla.mil -- Downloaded: 2016-10-21T11:29Z
Check the source to verify that this is the current version before use.

STANDARDIZATION DOCUMENT IMPROVEMENT PROPOSAL

INSTRUCTIONS

1. The preparing activity must complete blocks 1, 2, 3, and 8. In block 1, both the document number and revision letter should be given.
2. The submitter of this form must complete blocks 4, 5, 6, and 7.
3. The preparing activity must provide a reply within 30 days from receipt of the form.

NOTE: This form may not be used to request copies of documents, nor to request waivers, or clarification of requirements on current contracts. Comments submitted on this form do not constitute or imply authorization to waive any portion of the referenced document(s) or to amend contractual requirements.

I RECOMMEND A CHANGE:

1. DOCUMENT NUMBER: MIL-STD-129M

2. DOCUMENT DATE (YYMMDD): 15 June 1993

3. DOCUMENT TITLE: Marking for Shipment and Storage

4. NATURE OF CHANGE (*Identify paragraph number and include proposed rewrite, if possible. Attach extra sheets as needed.*)

5. REASON FOR RECOMMENDATION

6. SUBMITTER

a. NAME (*Last, First, Middle Initial*)

b. ORGANIZATION

c. ADDRESS (*Include Zip Code*)

d. TELEPHONE (*Include Area Code*)
(1) Commercial
(2) AUTOVON (*If applicable*)

7. DATE SUBMITTED (YYMMDD)

8. PREPARING ACTIVITY

a. NAME
Chief
LOGSA PSCC
ATTN: AMXLS-TP-P

b. TELEPHONE (*Include Area Code*)
(1) Commercial
(2) AUTOVON 795-7145

c. ADDRESS (*Include Zip Code*)
11 Midway Road
Tobyhanna, PA 18466-5097

IF YOU DO NOT RECEIVE A REPLY WITHIN 45 DAYS, CONTACT:
Defense Quality and Standardization Office
5203 Leesburg Pike, Suite 1403, Falls Church, VA 22041-3466
Telephone (703) 756-2340 AUTOVON 289-2340

Source: https://assist.dla.mil -- Downloaded: 2016-10-21T11:29Z
Check the source to verify that this is the current version before use.