INCH-POUND

MIL-C-28748B
20 Sept 1991
SUPERSEDING
MIL-C-28748A
4 February 1985

MILITARY SPECIFICATION

# CONNECTOR, PLUG AND RECEPTACLE, RECTANGULAR, RACK AND PANEL SOLDER TYPE AND CRIMP TYPE CONTACTS

GENERAL SPECIFICATION FOR

This specification is approved for use by all Departments and Agencies of the Department of Defense.

## 1. SCOPE

1.1 Scope. This specification covers rectangular, rack and panel, electrical connectors, with nonremovable solder type contacts, and removable crimp type contacts, intended for use in electronic and electrical equipments (see 6.1).

## 2. APPLICABLE DOCUMENTS

2.1 Government documents.

2.1.1 Specifications, standards, and handbooks. The following specifications, standards, and handbooks form a part of this document to the extent specified herein. Unless otherwise specified, the issues of these documents are those listed in the issue of the Department of Defense Index of Specifications and Standards (DODISS) and supplement thereto, cited in the solicitation (see 6.2).

SPECIFICATIONS

FEDERAL

| | | |
|---|---|---|
| QQ-B-626 | - | Brass, Leaded and Nonleaded: Rod, Shapes Forging, and Flat Products with Finish Edges (Bar and Strip). |
| QQ-B-750 | - | Bronze, Phosphor: Bar Plate, Rod, Sheet, Strip, Flat Wire, and Structural and Special Shaped Sections. |
| QQ-B-613 | - | Brass Leaded and Nonleaded: (Flat Products Plate, Bar, and Strip). |
| QQ-N-290 | - | Nickel Plating (Electrodeposited). |
| QQ-A-250/8 | - | Aluminum Alloy, 5052, Plate and Sheet. |
| QQ-P-35 | - | Passivation Treatments for Corrosion Resisting Steel. |
| QQ-P-416 | - | Plating, Cadmium (Electrodeposited). |
| QQ-S-571 | - | Solder, Tin Alloy, Lead-Tin Alloy, and Lead Alloy. |
| QQ-S-766 | - | Steel Plates, Sheets, and Strip Corrosion-Resisting. |
| QQ-Z-325 | - | Plating, Zinc, Electrodeposited. |

Beneficial comments (recommendations, additions, deletions) and any pertinent data which may be of use in improving this document should be addressed to: Commander, Defense Electronic Supply Center, ATTN: DESC-EMT, 1507 Wilmington Pike, Dayton, OH, 45444 by using the Standardization Document Improvement Proposal (DD Form 1426) appearing at the end of this document or by letter.

AMSC N/A FSC 5935

DISTRIBUTION STATEMENT A. Approved for public release;distribution is unlimited.

Source: https://assist.dla.mil -- Downloaded: 2016-11-16T08:22Z
Check the source to verify that this is the current version before use.

MILITARY

| | | |
|---|---|---|
| MIL-A-8625 | - | Anodic Coatings, For Aluminum and Aluminum Alloy. |
| MIL-M-14 | - | Molding Plastics and Molded Plastic Parts, Thermosetting. |
| MIL-P-116 | - | Preservation, Methods of. |
| MIL-D-1000 | - | Drawings, Engineering and Associated Lists. |
| MIL-W-16878 | - | Wire, Electrical, Insulated, High Temperature. |
| MIL-I-17214 | - | Indicator, Permeability, Low-Mu (Go-No-Go). |
| MIL-M-24519 | - | Molding Plastics, Polyester and Polyarylether Thermoplastic. |
| MIL-T-22520 | - | Tool Crimping, Contact, Electrical Connector. |
| MIL-C-39029 | - | Contacts, Electrical Connector, General Specification For. |
| MIL-C-39029/34 | - | Contacts, Electrical Connector, Pin, Crimp Removal, (For MIL-C-28748/3 and MIL-C-28748/13 Connectors). |
| MIL-C-39029/35 | - | Contacts, Electric Connector, Socket, Crimp Removal, (For MIL-C-28748/4 and MIL-C-28748/14 Connectors). |
| MIL-C-39029/36 | - | Contact, Electrical Connector, Pin, Crimp Removal, (MIL-C-28748/9 Connectors). |
| MIL-C-39029/37 | - | Contact, Electrical Connector, Pin, Crimp Removal, (For MIL-C-28748 Connectors). |
| MIL-G-45204 | - | Gold Plating, Electrodeposited. |
| MIL-I-81969/18 | - | Installing and Removal Tools, Connector Electrical Contact, Type I, Class 1. |
| MIL-I-81969/20 | - | Installing and Removal Tools, Connector Electrical Contact, Type II, Class 1. |
| MIL-C-55330 | - | Connector Preparation For Delivery of. |
| MIL-P-81728 | - | Plating Tin Lead (Electrodeposited). |

STANDARDS

MILITARY

| | | |
|---|---|---|
| MIL-STD-105 | - | Sampling Procedures and Tables for Inspection by Attributes. |
| MIL-STD-129 | - | Marking for Shipment and Storage. |
| MIL-STD-202 | - | Test Method for Electronic and Electrical Component Parts. |
| MIL-STD-889 | - | Dissimilar Metals. |
| MIL-STD-1285 | - | Marking of Electrical and Electronic Parts. |
| MIL-STD-1344 | - | Test Methods for Electrical Connectors. |
| MIL-STD-45662 | - | Calibration Systems Requirements. |
| MS3197 | - | Gage Pin For Socket Contact Engagement Test. |
| MS18194 | - | Jackscrew, Electrical Connector, Male and Female, Long, Turnable. |
| MS18195 | - | Jackscrew, Electrical, Connector, Male and Female, Short Turnable. |
| MS18196 | - | Jackscrew, Electrical, Connector, Male and Female, Fixed. |
| MS18197 | - | Guide Pin, Electrical, Connector, Male and Female. |

2.2 Non-Government publications. The following documents form a part of this document to the extent specified herein. Unless otherwise specified, the issues of documents which are DoD adopted are those listed in the issue DoDISS cited in the solicitation. Unless otherwise specified, the issues of documents not listed in the DoDISS are the issues of the documents cited in the solicitation (see 6.2).

AMERICAN NATIONAL STANDARDS INSTITUTE (ANSI)

ANSI B46.1-1982 - Surface Texture (Surface Roughness, Waviness and Lay).

(Applications for copies should be addressed to the American National Standards Institute, Inc., 1430 Broadway, New York, N.Y. 10018-3308).



Source: https://assist.dla.mil -- Downloaded: 2016-11-16T08:22Z
Check the source to verify that this is the current version before use.

AMERICAN SOCIETY FOR TESTING AND MATERIALS (ASTM)

| | | |
|---|---|---|
| ASTM B 122 | - | Copper-Nickel-Tin Alloy, Copper-Nickel-Zinc Alloy (Nickel Silver), and Copper-Nickel Alloy Plate, Sheet, Strip, Rolled Bar. |
| ASTM B 194 | - | Copper-Beryllium Alloy Plate, Sheet, Strip, and Rolled Bar. |
| ASTM B 196 | - | Copper-Beryllium Alloy Rod and Bar. |
| ASTM B 197 | - | Copper-Beryllium Alloy Wire. |

(Applications for copies should be addressed to the American Society for Testing and Materials, 1916 Race Street, Philadelphia, PA 19103-1187).

ELECTRONIC INDUSTRIES ASSOCIATION

| | | |
|---|---|---|
| EIA-364-11 1987 | - | Test Procedure No. 11, Resistance to Solvents; Test Procedure for Electrical Connectors. |
| EIA-364-56 1987 | - | Test Procedure No. 56, Resistance to Soldering Heat; Test Procedure for Electrical Connectors. |

(Applications for copies should be addressed to the Electronic Industries Association, Engineering Department, 1722 Eye St. N.W. Washington D.C. 20006.)

(Non-Government standards and other publications are normally available from the organizations that prepare or distribute the documents. These documents also may be available in or through libraries or other informational services.)

2.3 Order of precedence. In the event of a conflict between the text of this document and the references cited herein, the text of this document takes precedence. Nothing in this document, however, supersedes applicable laws and regulations unless a specific exemption has been obtained.

3. REQUIREMENTS

3.1 Specification sheets. The individual item requirements shall be as specified herein and in accordance with the applicable specification sheet. In the event of conflict between this specification and the specification sheet, the latter shall govern.

3.2 Qualification. Connectors and removable contacts furnished under this specification shall be products which are authorized by the qualifying activity for listing on the applicable qualified products list at the time of award of contract (see 4.4 and 6.4).

3.3 Materials. Materials shall be as specified herein. However, when a definite material is not specified, a material shall be used which will enable the connectors and contacts to meet the performance requirements of this specification. Acceptance or approval of a constituent material shall not be construed as an assurance of the acceptance of the finished product.

3.3.1 Nonmagnetic materials. All parts shall be made from materials which are classed as nonmagnetic.

3.3.2 Metals and finishes. All exposed metal parts, other than electrical contacts, shall be of a corrosion-resistant material or shall be finished to resist corrosion. Noncorrosion-resisting metal parts shall be cadmium plated in accordance with type II, class 1 or class 2, of QQ-P-416 or zinc plated in accordance with type II, class 1 or class 2 of QQ-Z-325, except that a preliminary plating of other metal is permissible. Aluminum alloy parts shall be anodized in accordance with MIL-A-8625, type I or II. Corrosion resistance steel parts shall be passivated in accordance with QQ-P-35. Unless otherwise specified (see 3.1), all finishes shall be conductive.

3.3.2.1 Dissimilar metals. When dissimilar metals (as defined in MIL-STD-889) are used in intimate contact with each other, protection against electrolysis and corrosion shall be provided. The use of dissimilar metals which, in contact, tend toward active electrolytic corrosion (particularly brass, copper, or steel used in contact with aluminum and aluminum alloy) is not acceptable.



Source: https://assist.dla.mil -- Downloaded: 2016-11-16T08:22Z
Check the source to verify that this is the current version before use.

3.3.3 Insert material. Insert material shall be a diallyl phthalate conforming to type SDG-F, GDI-30F, GII-30F, or SIG-F of MIL-M-14 or polyphenylene sulfide conforming to type GST-40F of MIL-M-24519.

3.3.4 Contacts. Solder type contacts shall conform to figure 3. Materials shall be in accordance with QQ-B-613 or QQ-B-626 or QQ-B-750 or ASTM B 122 (C72500) or ASTM B 194 or ASTM B 196 or ASTM B 197. Crimp type contacts shall conform to MIL-C-39029.

3.3.4.1 Contact retaining clip. The contact retaining clip shall be of a material which will assure compliance with the contact retention requirements (see 3.5.4). Plastic contact retaining clips shall not be used.

3.3.4.2 Contact finish (solder type).

3.3.4.2.1 Overall finish. All parts of the contact shall be gold-plated in accordance with MIL-G-45204, type I, grade C, class 1, over an underplate of nickel in accordance with QQ-N-290, class 2, .000050 (0.00127 mm) to .000150 (0.00381) inches thick.

3.3.4.2.2 Localized finish.

3.3.4.2.2.1 Contact mating area. The contact mating area shall be gold in accordance with MIL-G-45204, type I, grade C, class 1, over an underplate of nickel in accordance with QQ-N-290, class 2, .000050 to .000150 inch thick. The contact mating area is as specified on figure 1.

3.3.4.2.2.2 Terminations. Terminations shall be plated in accordance with MIL-G-45204, type I, grade C, class 1 over an underplate of nickel in accordance with QQ-N-290, class 2, .000050 to .000150 inch thick or tin-lead in accordance with MIL-P-81728, .0001 (0.00254 mm) minimum thickness.

3.3.4.2.2.3 Nonfunctional areas (crimp and solder contacts). Any portion of the contact other than the contact mating area or termination area shall have a nickel plating in accordance with QQ-N-290, .000050 to .000150 inch thick.

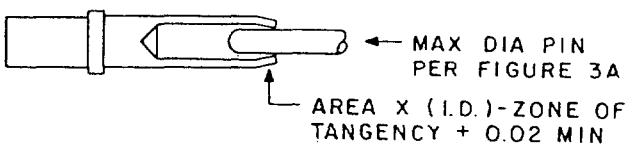


SOCKET CONTACTS WITH INTEGRAL PRESSURE MEMBERS

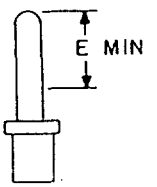


PIN CONTACTS

E = LENGTH OF MAX ELECTRICAL CONTACT (WIPING) PLUS 0.020 INCH.

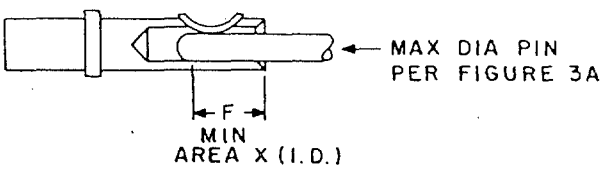


F = LENGTH OF MAXIMUM ELECTRICAL CONTACT WIPING PLUS 0.020 INCH MINIMUM WIPE SHALL BE EQUAL TO MAXIMUM E OF MATING PIN ENGAGEMENT MINUS THE SPHERICAL RADIUS.

SOCKET CONTACTS WITH SEPARATE PRESSURE MEMBERS

FIGURE 1. Areas of application of localized finish.



Source: https://assist.dla.mil -- Downloaded: 2016-11-16T08:22Z
Check the source to verify that this is the current version before use.

3.3.5 Protective shells, connector shields and accessories. Unless otherwise specified, protective shells, connector shields, and other accessories shall be made of a high grade aluminum alloy conforming to QQ-A-250/8, Temper H-32 or corrosion-resistant steel conforming to QQ-S-766, series 300 (nonmagnetic), or other material satisfactory to the Government. There shall be no assembly of protective shells, connector shields or other accessories made of different materials than specified herein.

3.4 Design and construction. Connectors shall be of the design and construction specified (see 3.1). The removable contact connector is intended to permit individual insertion and removal of the contacts with the insertion and removal tools specified in 3.4.6. Wire conductors shall be attached to the contacts by crimping with the crimp tools specified in 3.4.7 for removable contacts and soldered for nonremovable contacts.

3.4.1 Insert design. Inserts shall be of one-piece construction and shall be such that they will not crack, chip, or break in normal service or assembly. Inserts glued or bonded together shall not be used. The insert dimensions shall be as specified (see 3.1). The insert hole configuration for the removable contacts shall conform to the dimensions shown on figure 2. Removable contacts, when assembled, shall be recessed a minimum of 0.010 inch (0.254 mm) below the rear face of the insert.

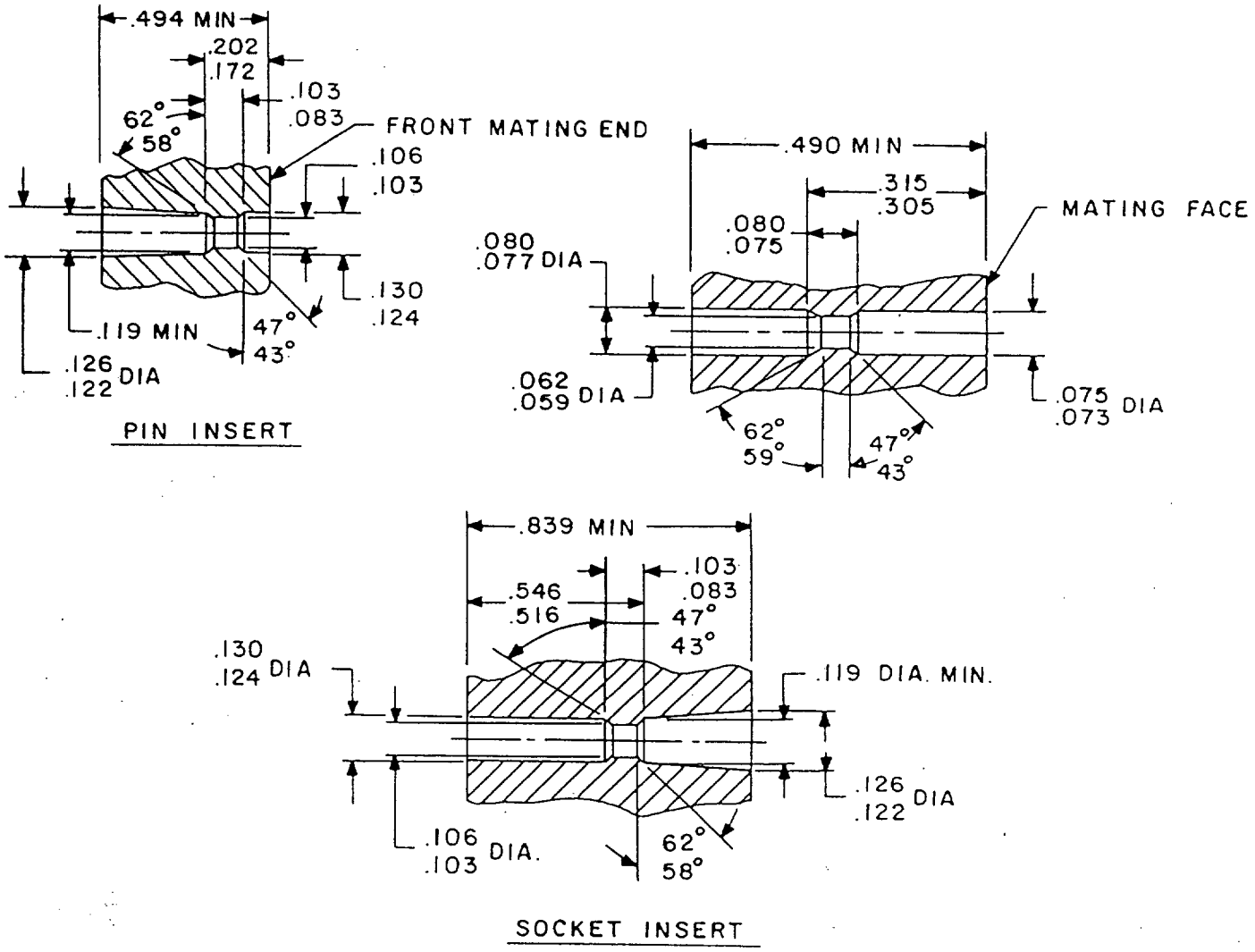


FIGURE 2. Insert hole configuration.



Source: https://assist.dla.mil -- Downloaded: 2016-11-16T08:22Z
Check the source to verify that this is the current version before use.

3.4.2 Contacts.

3.4.2.1 Removable contacts. Removable contacts shall be qualified to MIL-C-39029. For shipments to the original equipment manufacturers (OEM), or other suppliers, crimp contact connectors may be supplied without contacts. (See 3.6 and 6.2).

3.4.2.1.1 Pin contacts. Pin contacts shall conform to MIL-C-39029/34 and MIL-C-39029/36.

3.4.2.1.2 Socket contacts. Sockets shall conform to MIL-C-39029/35 and MIL-C-39029/37.

3.4.2.1.3 Contact retaining clip. The contact retaining clip shall be furnished as part of the contact, assembled in the location shown on MIL-C-39029/34, MIL-C-39029/35, MIL-C-39029/36, and MIL-C-39029/37. The design of the clip shall be such that the contacts are capable of being inserted and removed by the tools shown on MIL-I-81969/18 and MIL-I-81969/20.

3.4.2.2 Nonremovable contacts. Nonremovable contact dimensions shall be as shown on figure 3 and shall meet the applicable requirements of this specification.

3.4.2.2.1 Contact pin. The contact pin shall be of the round pin type with a 60-degree included angle, allowing for a flat end not in excess of 0.015 inch (0.381 mm) in diameter for size 20 or larger and 0.008 inch (0.203 mm) for smaller.

3.4.2.2.2 Socket contact. The socket contact shall have a circular cross-section and shall be machined. The entering end of the socket contact shall be rounded or chamfered to allow for directing and centering of the entering pin. The socket contact shall provide the spring action for maintaining the contact pressure between the pin and socket. The contact shall be of the closed entry design to exclude the entrance of a pin 0.005 inch (0.127 mm) larger than the allowable maximum diameter of the mating pin.

3.4.2.2.3 Tinning solder cups. Where pretinned solder cups are required, the interior surface of solder cups shall be completely tinned over 100 percent of the full circle portion and for at least 50 percent of the remainder of the solder well area with solder conforming to composition Sn60 of QQ-S-571. Only fluxes meeting QQ-S-571 shall be used, any excess of which shall be removed. Solder cup terminals shall be so constructed that liquid solder cannot leak through to the front of the socket and prevent insertion of the pin contact. No excess solder shall be on the exterior of the solder cup.

3.4.2.3 Electrical characteristics. Contacts shall have the electrical characteristics as specified in table I.

TABLE I. Current rating.

| Contact size | Wire size (AWG) | Amperes (max) |
|---|---|---|
| Solder | | |
| 16 | 16 | 13 |
| 20 | 20 | 7.5 |
| 22 | 22 | 5.0 |
| Crimp | | |
| 16-16 | 16 | 13 |
| 16-16 | 18 | 10 |
| 16-16 | 20 | 7.5 |
| 16-20 | 20 | 7.5 |
| 16-20 | 22 | 5.0 |
| 16-20 | 24 | 3.0 |
| 20-20 | 20 | 7.5 |
| 20-20 | 22 | 5.0 |
| 20-20 | 24 | 3.0 |



Source: https://assist.dla.mil -- Downloaded: 2016-11-16T08:22Z
Check the source to verify that this is the current version before use.

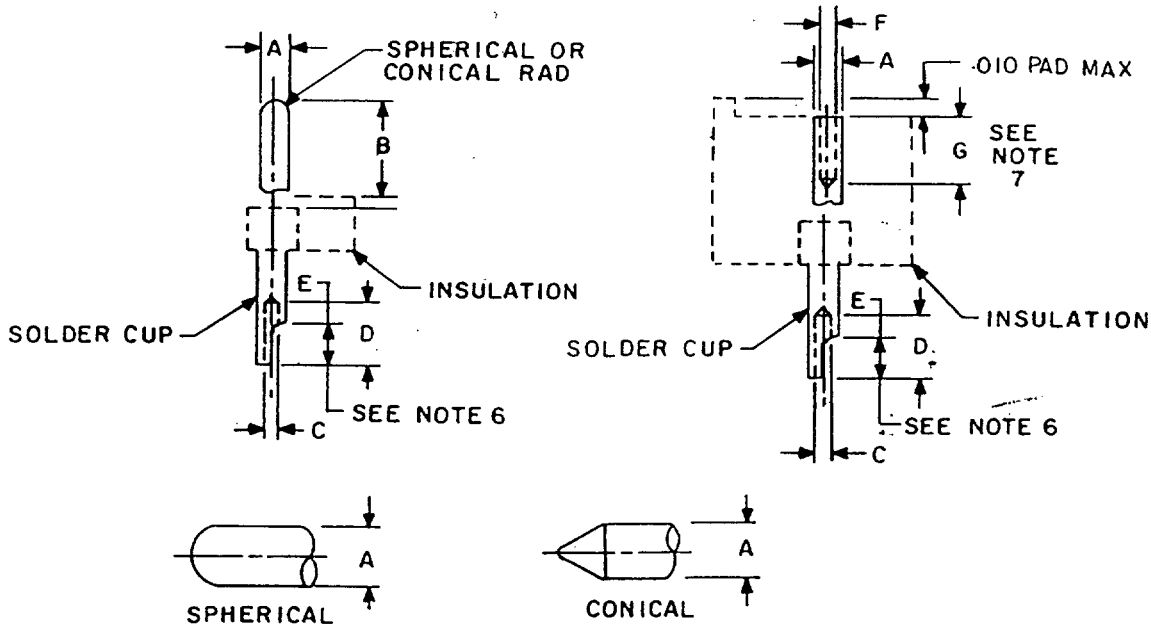


| Dimensions | | | | |
|---|---|---|---|---|
| Contact size | A dia | B ±.015 (0.38) | C min dia | D min |
| 22 | .030 ±.0005 (.76 ±.01) | .145 (3.69) | .034 (0.86) | .065 (1.65) |
| 20 | .040 ±.001 (1.02 ±.03) | .203 (5.16) | .043 (1.09) | .115 (2.92) |
| 16 | .0625 ±.001 (1.58 ±.03) | .223 (5.59) | .069 (1.79) | .115 (2.92) |

Configuration A. Pin.

FIGURE 3. Contact assembly dimensions for nonremovable contacts.



Source: https://assist.dla.mil -- Downloaded: 2016-11-16T08:22Z
Check the source to verify that this is the current version before use.

| Dimensions | | | | | |
|---|---|---|---|---|---|
| Contact size | A dia | C min dia | D min | F min dia | G min |
| 22 | .066 (1.68) .055 (1.40) | .034 (0.86) | .065 (1.65) | .032 (0.81) | .170 (4.31) |
| 20 | .072 (1.83) .064 (1.62) | .043 (1.09) | .115 (2.92) | .0415 (1.054) | .290 (7.37) |
| 16 | .106 (2.69) .099 (2.51) | .069 (1.79) | .115 (2.92) | .064 (1.63) | .290 (7.37) |

Configuration B. Socket.

NOTES:
1. Dimensions are in inches.
2. Millimeters are in parentheses.
3. Metric equivalents are given for general information only.
4. Wall thickness shall be .005 min (0.13 mm) at any point.
5. Dimensions are for finished parts after plating.
6. E is 75-50% of D.
7. Minimum bore depth of socket from connector mating surface.

FIGURE 3. Contact assembly dimensions for nonremovable contacts - Continued.



Source: https://assist.dla.mil -- Downloaded: 2016-11-16T08:22Z
Check the source to verify that this is the current version before use.

3.4.2.4 Contact identification and arrangement. The contact identification and arrangement shall be as specified (see 3.1). Letters or numerals shall be raised and clearly legible or shall appear in legible contrasting colors. Letters or numerals shall be arranged to avoid confusion between contacts. All letters or numerals shall appear on the front and rear faces of each insert. Lettering of the socket insert shall correspond with that of the mating pin insert.

3.4.3 Polarization. Polarization of the plug with its receptacle shall be accomplished by mechanical means such as the shells, protective shell, bosses, guide pins, guide sockets, or jackscrews. Jackscrews, other than center jackscrew types, shall conform to MS18194, MS18195, or MS18196 as applicable. Guide pins shall conform to MS18197. Where jackscrews and jack sockets are required, they shall be provided with a suitable lubricant.

3.4.4 Mating. Unless otherwise specified (see 3.1), connector plugs and receptacles shall be capable of being mated and unmated by hand without the aid of special tools.

3.4.5 Protective shell. The protective shell design shall be in accordance with the applicable military standard listed on the supplement to this specification (see 3.1).

3.4.6 Insertion and removal tools. Insertion and removal tools shall be used for easy assembly and disassembly of pin and socket contact and shall permit connectors to meet the performance requirements of this specification. Installing tools shall be in accordance with MIL-I-81969/18, and removal tools shall be in accordance with MIL-I-81969/20.

3.4.7 Crimping tools. Crimping tools shall conform to the applicable military standard as shown in table II.

3.4.8 Operating temperature. The connectors shall be suitable for operation throughout a temperature range of -55°C to +125°C.

3.4.9 Part number changes. Changes in the manufacturer's part numbers shall be covered by the drawing requirements of MIL-D-1000.

3.4.10 Assembly. For shipments to the OEM or suppliers, connectors may be shipped unassembled. For shipments directly to the Government, all connectors shall be assembled except for the removable contacts.

3.5 Performance. Connectors shall be designed to meet the performance requirements specified herein.

3.5.1 Magnetic permeability. The relative permeability of the connector assembly or shield shall be less than 2.0 Mu (see 4.6.2).



Source: https://assist.dla.mil -- Downloaded: 2016-11-16T08:22Z
Check the source to verify that this is the current version before use.

TABLE II. Crimping tools.

| Contacts | Applicable tool | |
|---|---|---|
| | Basic tool | Positioner |
| MIL-C-39029/34 | MIL-C-22520/1-01 | M22520/1-03 |
| MIL-C-39029/35 | MIL-C-22520/1-01 | M22520/1-03 |
| MIL-C-39029/36 | MIL-C-22520/1-01 | M22520/1-03 |
| MIL-C-39029/37 | MIL-C-22520/1-01 | M22520/1-03 |
| MIL-C-39029/34-440 | MIL-C-22520/2-01 | Buchanan 614412, Daniels K187 or equivalent |
| MIL-C-39029/35-441 | MIL-C-22520/2-01 | Buchanan 615695, Daniels K280 or equivalent |

3.5.2 Insulation resistance. When the connectors are tested as specified in 4.6.3, the insulation resistance shall be not less than 5,000 megohms.

3.5.3 Dielectric withstanding voltage. When tested as specified in 4.6.4, connectors shall withstand the test voltage as specified in table III without flashover.

3.5.4 Contact retention. When tested as specified in 4.6.5, individual contacts shall withstand an axial load as shown in table IV without damage to the contact, insert, or contact retaining clip, if applicable.

3.5.5 Contact insertion and removal forces (removable contacts only). When tested as specified in 4.6.6, the axial forces required to insert and remove removable contacts shall not exceed 15 pounds.

3.5.6 Temperature cycling. When the connectors are tested as specified in 4.6.7, there shall be no evidence of physical damage. Following temperature cycling, the dielectric withstanding voltage shall meet the requirements of 3.5.3.

3.5.7 Humidity. When the connectors are tested as specified in 4.6.6, the insulation resistance shall be not less than 100 megohms and the dielectric withstanding voltage shall meet the requirements of 3.5.3.

TABLE III. Test voltages for dielectric withstanding voltage requirement.

| Contact size | Test voltage, 60 Hz rms (sea level) | |
|---|---|---|
| | Initial volts | After conditioning volts |
| Solder | | |
| 22 | 1,000 | 500 |
| 20 | 1,200 | 600 |
| 16 | 1,000 | 500 |
| Crimp | | |
| 22-22 | 1,000 | 500 |
| 16-20 | 2,000 | 1,000 |
| 16-16 | 2,000 | 1,000 |



Source: https://assist.dla.mil -- Downloaded: 2016-11-16T08:22Z
Check the source to verify that this is the current version before use.

TABLE IV. Contact retention.

| Mating end size | Pounds |
|---|---|
| 22 | 6 |
| 20 | 10 |
| 16 | 20 |

3.5.8 Vibration. When the complete connector assembly, wired with the appropriate size wire, is tested as specified in 4.6.9, there shall be no cracking, breaking, or loosening of parts. There shall be no loss of electrical continuity of any contact circuits of more than 1 microsecond with 100 milliamperes minimum flowing in each contact circuit.

3.5.9 Shock (specified pulse). When tested as specified in 4.6.10, there shall be no evidence of failure of metallic or dielectric materials, nor shall the mated portions of the connector become disengaged. There shall be no loss of electrical continuity of any of the contact circuits of more than 1 microsecond with 100 milliamperes minimum flowing in each contact circuit.

3.5.10 Insertion and withdrawal force (connector assembly). When tested as specified in 4.6.11, the force required to engage or separate any pair of mated connectors (plug and receptacle) shall not exceed 1 pound times the number of contacts specified on the applicable specification sheet or military standard (see 3.1).

3.5.11 Durability. When connector assemblies are tested as specified in 4.6.12, there shall be no evidence of electrical or mechanical damage that impairs the normal operation of the connector.

3.5.12 Contact resistance. When contacts in the mated condition are tested as specified in 4.6.13, the contact resistance shall be as specified in table V.

TABLE V. Contact resistance.

| Contact size | Test current amperes (max) | Initial volts (max) | After conditioning volts (max) |
|---|---|---|---|
| 22 | 5.0 | .060 | .070 |
| 20 | 7.5 | .055 | .065 |
| 16 | 13.0 | .050 | .060 |

3.5.13 Salt spray (corrosion).

3.5.13.1 Connectors. When connectors are tested as specified in 4.6.14, there shall not be sufficient corrosion to interfere with mating or unmating the connectors. Following the salt spray test, the dielectric withstanding voltage shall meet the requirements of the conditioning values specified in table III. Contact resistance shall not exceed the requirements of 3.5.14.

3.5.13.2 Nonremovable contacts. When nonremovable contacts are tested as specified in 4.6.14, any corrosive products resulting therefrom shall not cause exposure of base metal on the sets of pin and socket contacts.

3.5.14 Low level circuit (for nonremovable contacts). When tested as specified in 4.6.15, the values of contact resistance shall not exceed the potential drop in table Va.



Source: https://assist.dla.mil -- Downloaded: 2016-11-16T08:22Z
Check the source to verify that this is the current version before use.

TABLE VA. Low level circuit.

| Wire size AWG | Initial contact resistance (max) (ohms) 1/ | Initial potential drop (max) (volts) | After conditioning resistance (max) (ohms) 1/ | After conditioning voltage (max) (volts) |
|---|---|---|---|---|
| 16 | 5 mΩ | 5 μV | 60 mΩ | 6 μV |
| 20 | 9 mΩ | 9 μV | 11 mΩ | 11 μV |
| 22 | 15 mΩ | 15 μV | 17 mΩ | 17 μV |

1/ Test current shall be .001 amperes.

3.5.15 Resistance to test probe damage (for nonremovable contacts). When tested as specified in 4.6.16, socket contacts shall withstand the bending moment and depth of test probe insertion without evidence of visible damage. In addition, socket contacts shall meet the requirements of 3.5.16.

3.5.16 Contact separating forces (nonremovable contacts). When socket contacts are tested as specified in 4.6.17, the forces required to withdraw the pins shall be in accordance with table VI.

3.5.17 Industrial gas. When tested as specified in 4.6.19, unmated contacts shall withstand industrial gas conditioning for 100 hours and show no evidence of damage that would interfere with the mechanical or electrical performance.

TABLE VI. Contact separating forces.

| Contact size | Maximum force (ounces) | Minimum force (ounces) |
|---|---|---|
| 22 | 9.0 | 0.5 |
| 20 | 16.0 | 0.75 |
| 16 | 20.0 | 2.0 |

3.5.18 Solderability. Solderable, nonremovable contact terminations shall withstand the test specified in 4.6.20, unless solder cup terminations are specified. For solder cup terminations, individual contacts may be removed from the insulator or an alternate method using a hand iron may be used on the contacts in an assembled (nonremoved) configuration.

3.5.19 Resistance to soldering heat. When tested in accordance with 4.6.21, the connectors shall be visually inspected and shall show no evidence of distortion or physical damage and shall meet the contact retention requirements of 3.5.4 and dimensional requirements of 3.4.



Source: https://assist.dla.mil -- Downloaded: 2016-11-16T08:22Z
Check the source to verify that this is the current version before use.

3.5.20 Resistance to solvents. When tested in accordance with 4.6.22, the connectors shall be visually inspected and shall show no evidence of cracking, crazing, discoloration, distortion or bleeding out of any foreign matter from the material. Pitting shall not be allowed. The marking and color coding shall be legible.

3.5.21 Contact pin strength. Contact pin strength shall be tested in accordance with 4.6.23 with the forces specified in table VIA. The force shall not produce a permanent set in excess of 0.005 inch (0.13 mm).

TABLE VIA. Contact pin strength.

| Mating end (contact size) | Moment (lb-in.) 1/ |
|---|---|
| 16 | 2.00 (8.896 N) |
| 20 | .53 (2.358 N) |
| 22 | .22 (0.979 N) |

1/ Metric equivalents are given for information only.

3.6 Marking. Connectors and shields shall be marked in accordance with method I of MIL-STD-1285, and shall include the military part number (see 3.1), the manufacturer's name or code symbol, and date code. For shipments of connectors without contacts to the original equipment manufacturer (OEM) or other contractors, the complete military part number of the connector with contacts shall be marked on the connector (see 3.4.2.1 and 6.2).

3.7 Workmanship. Connectors, contacts, shields, jackscrews, and guide pins shall be processed in such a manner as to be uniform in quality and shall be free from defects that will affect life, serviceability or appearance. There shall be no evidence of poor molding, fabricating, cracking of insulator after molding or improperly assembled contacts, peeling or chipping of the plating or finish, nicks and burrs of metal parts surfaces, and no post molding warpage of connectors. The contacts shall be free from such burrs or sharp corners that would damage the plating of mating connectors.

4. QUALITY ASSURANCE PROVISIONS

4.1 Responsibility for inspection. Unless otherwise specified in the contract or purchase order, the contractor is responsible for the performance of all inspection requirements (examinations and tests) as specified herein. Except as otherwise specified in the contract or purchase order, the contractor may use his own or any other facilities suitable for the performance of the inspection requirements specified herein, unless disapproved by the Government. The Government reserves the right to perform any of the inspections set forth in the specification where such inspections are deemed necessary to assure that supplies and services conform to prescribed requirements.

4.1.1 Responsibility for compliance. All items shall meet all requirements of sections 3 and 5. The inspection set forth in this specification shall become a part of the contractor's overall inspection system or quality program. The absence of any inspection requirements in the specification shall not relieve the contractor of the responsibility of ensuring that all products or supplies submitted to the Government for acceptance comply with all requirements of the contract. Sampling inspection, as part of manufacturing operations, is an acceptable practice to ascertain conformance to requirements, however, this does not authorize submission of known defective material, either indicated or actual, nor does it commit the Government to accept defective material.

4.1.2 Test equipment and inspection facilities. Test and measuring equipment and inspection facilities and sufficient accuracy, quality and quantity to permit performance of the required inspection shall be established and maintained by the contractor. The establishment and maintenance of a calibration system to control the accuracy of the measuring and test equipment shall be in accordance with MIL-STD-45662.



Source: https://assist.dla.mil -- Downloaded: 2016-11-16T08:22Z
Check the source to verify that this is the current version before use.

4.1.3 Assembly distributor. Assembly distributors must be listed on, or approved for listing on, the applicable qualified products list. The qualified connector manufacturer shall certify that the assembly distributor is approved for the distribution of the manufacturer's parts. The assembly distributor shall use only piece parts supplied by the qualified connector manufacturer. No testing other than visual examination is required of certified piece parts obtained from the qualified connector manufacturer, except when there is cause for rejection. All assemblies produced at the assembly distributor's plant shall be subjected to examination of product to assure that the assembly process conforms with that established at the qualified manufacturing plant. Quality control requirements, including Government inspection surveillance, shall be the same as required for the qualified connector manufacturer.

4.2 Classification of inspections. The inspections requirements specified herein are classified as follows:

a. Qualification inspection (see 4.4).

b. Quality conformance inspection (see 4.5).

4.3 Inspection conditions and preparation of samples.

4.3.1 Inspection conditions. Unless otherwise specified herein, all inspections shall be performed in accordance with the test conditions specified in the "GENERAL REQUIREMENTS" of MIL-STD-1344.

4.3.2 Preparation of samples.

4.3.2.1 Contacts. MIL-C-39029/34, MIL-C-39029/35, MIL-C-39029/36, and MIL-C-39029/37 contacts shall be wired using wire conforming to MIL-W-16878/4 or MIL-W-22759.

4.3.2.2 Shields (if applicable). Shields shall be furnished assembled.

4.4 Qualification inspection. Qualification inspection shall be performed at a laboratory acceptable to the Government (see 6.4) on sample units produced with equipment and procedures normally used in production.

4.4.1 Sample size.

4.4.1.1 Connectors. Completely assembled plugs or receptacles, complete with guide pins, jackscrews, back-up plates, contacts, and shields (if applicable) shall be subjected to qualification inspection as follows:

4.4.1.1.1 Connectors with nonremovable or removable contacts. The completely assembled plugs and receptacles (six each for crimp terminations and eight for non-removable contacts), with the insert arrangement of the largest size connector in accordance with the applicable military specification sheet, and two each completely assembled plugs and receptacles for all other connector sizes for which qualification is desired shall be submitted.

4.4.1.2 Nonremovable contacts. Forty sets of pin and socket contacts shall be subjected to qualification inspection.

4.4.2 Inspection routine. The sample shall be subjected to the inspections specified in tables VII and VIII, as applicable, in the order shown.



Source: https://assist.dla.mil -- Downloaded: 2016-11-16T08:22Z
Check the source to verify that this is the current version before use.

4.4.2.1 Connectors. The six mating connector assemblies (for crimp contact terminations) or eight mating connector assemblies (for nonremovable contacts), shall be divided equally into three groups (for crimp terminations) or four groups (for nonremovable contacts) of two units each for groups I, II, III, and V (group V is for solder terminations only) tests of table VII. Any two additional mating connector assemblies shall be designated as group IV sample units of table VII.

4.4.2.2 Nonremovable contacts. The sample shall be divided equally into two groups of 20 units each for groups I and II of table VIII and subjected to the inspection for their particular group. For salt spray test, 10 sets of contacts shall be unwired and unmated and 10 sets shall be mounted as shown on figure 4.

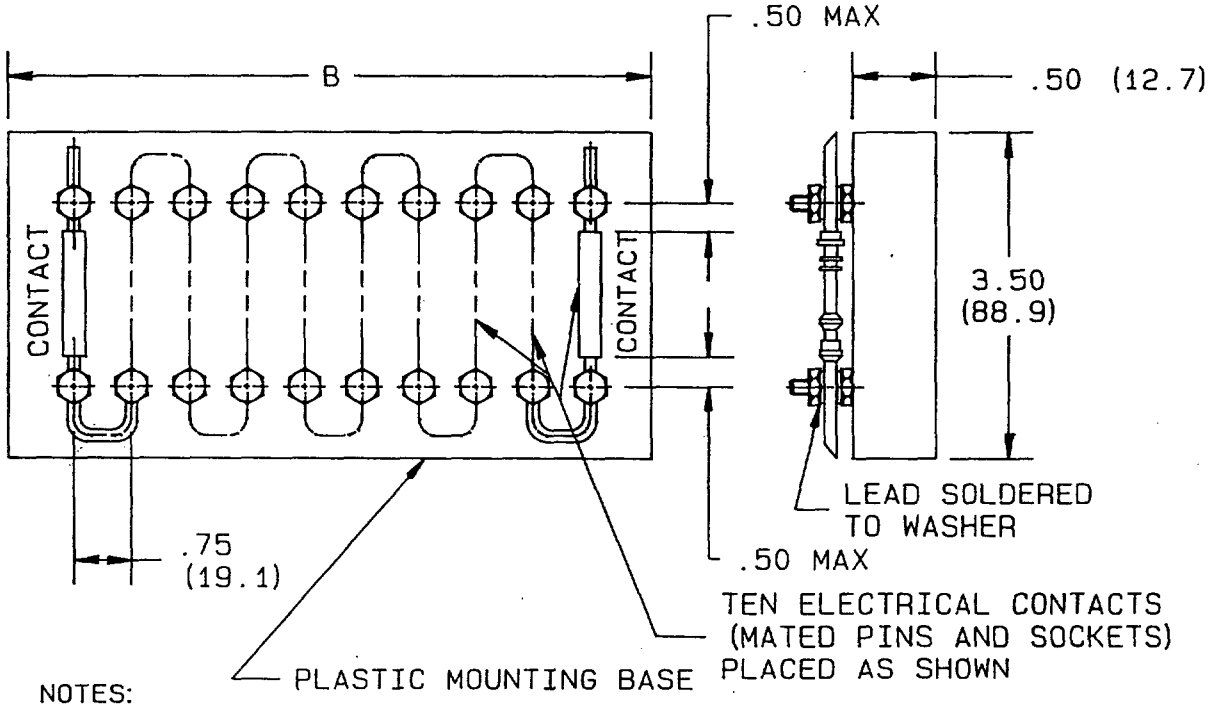


NOTES:
1. Dimensions are in inches.
2. Metric equivalents are given for general information only.
3. Metric equivalents are in parenthesis.

FIGURE 4. Test fixture for salt spray test.

4.4.3 Failures. One or more failures shall be cause for refusal to grant qualification approval.



Source: https://assist.dla.mil -- Downloaded: 2016-11-16T08:22Z
Check the source to verify that this is the current version before use.

TABLE VII. Qualification inspection - connectors.

| Number of sample units | Requirement paragraph | Test method paragraph | Number of sample units to be inspected | | | | | Condition | Number of failures |
|---|---|---|---|---|---|---|---|---|---|
| | | | Group | | | | | | |
| | | | I | II | III | IV | V | | |
| | | | 2 | 2 | 2 | 2 | 2 | | |
| Examination of product | 3.1.3.4.3.6, and 3.7 | 4.6.1 | X | X | X | X | X | All connectors | |
| Permeability | 3.5.1 | 4.6.2 | X | X | X | X | X | Mated or unmated | |
| Insulation resistance | 3.5.2 | 4.6.3 | X | X | | | | Mated | |
| Dielectric withstanding voltage | 3.5.3 | 4.6.4 | X | X | X | | | Unmated | |
| Contact retention | 3.5.4 | 4.6.5 | | X | | | X 3/ | Unmated | |
| Contact insertion and removal forces | 3.5.5 | 4.6.6 | X | | | | | Unmated | |
| Temperature cycling | 3.5.6 | 4.6.7 | X | | | | | Mated | |
| Dielectric withstanding voltage | 3.5.3 | 4.6.4 | X | | | | | Unmated | |
| Humidity | 3.5.7 | 4.6.6 | | X | | X | | Unmated | |
| Insulation resistance | 3.5.2 | 4.6.3 | | X | | X | | Unmated | |
| Dielectric withstanding voltage | 3.5.3 | 4.6.4 | | X | | X | | Unmated | |
| Vibration | 3.5.8 | 4.6.9 | X | | | 1/ X | | Mated | |
| Shock (specified pulse) | 3.5.9 | 4.6.10 | X | | | 1/ X | | Mated | |
| Insertion and withdrawal force (connector assembly) | 3.5.10 | 4.6.11 | X | | | | | Mated or unmated | |
| Durability | 3.5.11 | 4.6.12 | X | | | | | Mated or unmated | |
| Contact resistance | 3.5.12 | 4.6.13 | X | | | | | Mated | |
| Salt spray (corrosion) | 3.5.13.1 | 4.6.14 | | | X | | | Unmated | |
| Dielectric withstanding voltage | 3.5.3 | 4.6.4 | | | X | | | Mated | |
| Solderability | 3.5.18 | 4.6.20 | | | | | 2/ X | Unmated | |
| Resistance to soldering heat | 3.5.19 | 4.6.21 | | | | | 2/ X | Unmated | |
| Resistance to solvents | 3.5.20 | 4.6.22 | X | | | | X | Unmated | |

1/ Need not be monitored for electrical continuity during test.
2/ Applicable for solder type termination connectors only.
3/ This inspection is to be performed after "solderability and "resistance to soldering heat".



Source: https://assist.dla.mil -- Downloaded: 2016-11-16T08:22Z
Check the source to verify that this is the current version before use.

TABLE VIII. Qualification inspection - nonremovable contacts.

| Inspection | Requirement paragraph | Test method paragraph | Number of sample units to be inspected | Number of failures |
|---|---|---|---|---|
| Group I | | | | |
| Examination of product | 3.7 | 4.6.1 | 20 1/ sets | 0 |
| Salt spray (corrosion) | 3.5.13.2 | 4.6.14 | | |
| Examination of product | 3.7 | 4.6.1 | | |
| Low level circuit | 3.5.14 | 4.6.15 | | |
| Group II | | | | |
| Examination of product | 3.7 | 4.6.1 | 20 sets | |
| Resistance to test probe damage | 3.5.15 | 4.6.16 | | |
| Contact separating forces | 3.5.16 | 4.6.17 | | |
| Contact pin strength | 3.5.21 | 4.6.23 | | |
| Industrial gas | 3.5.17 | 4.6.19 | | |

1/ For salt spray test, 10 sets of contacts shall be unwired and unmated, and 10 sets shall be in accordance with figure 4.

4.4.4 Retention of qualification. To retain qualification, the contractor shall forward a report at 12- or 36-month intervals, as indicated below, to the qualifying activity. The qualifying activity shall establish the initial reporting date. The report shall consist of:

a. A summary of the results of the tests performed for inspection of product for delivery. Groups A and B shall be submitted every 12 months indicating, as a minimum, the number of lots that have passed and the number that have failed. The results of tests of all reworked lots shall be identified and accounted for.

b. A summary of the results of tests performed for qualification verification inspection, group C, shall be submitted every 36 months including the number and mode of failures. The summary shall include results of all qualification verification inspection tests performed and completed during the 36-month period. If the summary of the test results indicates nonconformance with specification requirements, and corrective action acceptable to the qualifying activity has not been taken, action may be taken to remove the failing product from the qualified products list.

Failure to submit the report within 30 days after the end of each 12- or 36-month period may result in loss of qualification for the product. In addition to the periodic submission of inspection data, the contractor shall immediately notify the qualifying activity at any time during the 12- or 36-month period that the inspection data indicates failure of the qualified product to meet the requirements of this specification.

In the event that no production occurred during the reporting period, a report shall be submitted certifying that the company still has the capabilities and facilities necessary to produce the item. If during 2 consecutive reporting periods there has been no production, the manufacturer may be required, at the discretion of the qualifying activity, to submit the connector to testing in accordance with the qualification inspection requirements.

4.5 Quality conformance inspection.

4.5.1 Inspection of product for delivery. Inspection of product for delivery shall consist of groups A and B inspection.

4.5.1.1 Inspection lot. An inspection lot shall consist of all the connectors of the same part number, produced under essentially the same conditions, and offered for inspection at one time.



Source: https://assist.dla.mil -- Downloaded: 2016-11-16T08:22Z
Check the source to verify that this is the current version before use.

4.5.1.1.1 Sample size, contact measurements. A total of 13 contact positions shall be measured per sample in each subgroup. For connectors with 13 or less contacts, all positions shall be measured. This shall apply to the requirements as specified in 4.6.20, 4.6.4, 4.6.13, and 4.6.15.

4.5.1.2 Group A inspection. Group A inspection shall consist of the examination and tests specified in table IX, in the order shown.

TABLE IX. Group A inspection.

| Inspection | Requirement paragraph | Test paragraph | AQL percent defective | |
|---|---|---|---|---|
| | | | Major | Minor |
| Examination of product | 3.1, 3.4, 3.6, and 3.7 | 4.6.1 | 1 | 4 |
| Dielectric withstanding voltage | 3.5.3 | 4.6.4 | | |
| Contact separating force (contacts) | 3.5.16 | 4.6.17 | | |

4.5.1.2.1 Sampling plan. Statistical sampling and inspection shall be in accordance with MIL-STD-105 for general inspection level II. The acceptable quality level (AQL) shall be as specified in table IX. Major and minor defects shall be as defined in MIL-STD-105.

4.5.1.2.2 Rejected lots. If an inspection lot is rejected, the contractor may rework it to correct the defects, or screen out the defective units, and resubmit for reinspection. Resubmitted lots shall be inspected using tightened inspection. Such lots shall be separate from new lots, and shall be clearly identified as reinspected lots.

4.5.1.3 Group B inspection. Group B inspection shall consist of the examinations and tests specified in table X, in the order shown, and the sample shall be selected from inspection lots that have passed group A inspection. Connector series may be combined for lot purposes during group B inspection and shall be in proportion to the number of connectors produced in each series.

4.5.1.3.1 Sampling plan. Four sample pairs containing the largest number of contact positions with a full complement of contacts (not including the variation in terminal types) available at time of inspection should be selected at random from items produced every 6 months. Where crimp type contacts are specified, that type shall be used in group b samples.

TABLE X. Group B inspection.

| Inspection | Requirement paragraph | Test paragraph |
|---|---|---|
| Examination of product | 3.1, 3.4, 3.6, and 3.7 | 4.6.1 |
| Permeability | 3.5.1 | 4.6.2 |
| Insulation resistance | 3.5.2 | 4.6.3 |
| Contact retention | 3.5.4 | 4.6.5 |
| Insertion and withdrawal force (connector assembly) | 3.5.10 | 4.6.11 |



Source: https://assist.dla.mil -- Downloaded: 2016-11-16T08:22Z
Check the source to verify that this is the current version before use.

4.5.1.3.2 Failures. If one or more sample units fail to pass group B inspection, the sample shall be considered to have failed.

4.5.1.3.3 Rejected lots. If an inspection lot is rejected, the contractor may rework it to correct the defects, or screen out the defective units, and resubmit for reinspection. Resubmitted lots shall be inspected using tightened inspection. Such lots shall be separate from new lots, and shall be clearly identified as reinspected lots.

4.5.1.3.4 Disposition of sample units. Sample units which have passed group B inspection may be delivered on a contract or purchase order if the lot is accepted.

4.5.2 Periodic inspection. Periodic inspection shall consist of group C inspection. Except where the results of these inspections show noncompliance with the applicable requirements (see 4.5.2.1.4), delivery of products which have passed groups A and B inspections shall not be delayed pending the results of these periodic inspections.

4.5.2.1 Group C inspection. Group C inspection shall consist of the examinations and tests specified in table XI, in the order shown. Group C inspection shall be made on sample units selected from inspection lots which have passed the groups A and B inspection.

4.5.2.1.1 Sampling plan. Six pairs of sample units of each part number of connectors, and forty sets of nonremovable pin and socket contacts shall be selected from current production after 200,000 connectors of each part number have been produced or once every 36 months, whichever occurs first. The six sets of connectors shall be divided into three groups and two pairs each shall be subjected to groups I, II, and III tests of table XI. The 40 sets of nonremovable pin and socket contacts shall be divided into two groups for the tests of groups IV and V of table XI.

4.5.2.1.2 Defectives. If the number of defectives exceed the number allowed in table XI, the sample shall be considered to have failed.

4.5.2.1.3 Disposition of sample units. Sample units which have been subjected to group C inspection shall not be delivered on the contract or purchase order.

4.5.2.1.4 Noncompliance. If a sample fails to pass group C inspection, the contractor shall take corrective action on the materials or processes, or both, as warranted, and on all units of product which can be corrected and which were manufactured under essentially the same conditions, with essentially the same materials, processes, etc., and which are considered subject to the same failure. Acceptance of the product shall be discontinued until corrective action, acceptable to the Government, has been taken. After the corrective action has been taken, group C inspection shall be repeated on additional sample units (all inspection, or the inspection which the original sample failed, at the option of the Government). Groups A and B inspections may be reinstituted; however, final acceptance shall be withheld until the group C reinspection has shown that the corrective action was successful. In the event of failure after reinspection, information concerning the failure and corrective action taken shall be furnished to the cognizant inspection activity and the qualifying activity.

4.5.3 Inspection of packaging. Except when commercial packaging is specified, the sampling and inspection of the preservation and interior package marking shall be in accordance with groups A and B quality conformance inspection requirements of MIL-P-116. The sampling and inspection of the package for shipment and storage shall be in accordance with the quality assurance provisions of the applicable container specification shown in section 5. The inspection of marking for shipment and storage shall be in accordance with MIL-STD-129. The inspection of commercial packaging shall be as specified in the contact (see 6.2).



Source: https://assist.dla.mil -- Downloaded: 2016-11-16T08:22Z
Check the source to verify that this is the current version before use.

TABLE XI. Group C inspection.

| Inspection | Requirement paragraph | Test method paragraph | Number of sample units to be inspected | Number of defectives permitted |
|---|---|---|---|---|
| Connectors | | | | |
| Group I | | | | |
| Temperature cycling | 3.5.6 | 4.6.7 | | |
| Dielectric withstanding voltage | 3.5.3 | 4.6.4 | | |
| Vibration | 3.5.8 | 4.6.9 | | |
| Shock (specified pulse) | 3.5.9 | 4.6.10 | 2 sets | |
| Humidity | 3.5.7 | 4.6.8 | | |
| Insulation resistance | 3.5.2 | 4.6.3 | | |
| Dielectric withstanding voltage | 3.5.3 | 4.6.4 | | 0 |
| Group II | | | | |
| Durability | 3.5.11 | 4.6.12 | 2 sets | |
| Contact resistance | 3.5.12 | 4.6.13 | | |
| Group III | | | | |
| Salt spray (corrosion) | 3.5.13.1 | 4.6.14 | 2 sets | |
| Dielectric withstanding voltage | 3.5.3 | 4.6.4 | | |
| Contacts | | | | |
| Group IV | | | | |
| Contact pin strength | 3.5.20 | 4.6.23 | 20 sets | |
| Resistance to test probe damage | 3.5.15 | 4.6.16 | | |
| Group V | | | | 0 |
| Salt spray (corrosion) | 3.5.13.2 | 4.6.14 | | |
| Solderability | 3.5.18 | 4.6.20 | | |
| Examination of product | 3.7 | 4.6.1 | 20 sets | |
| Low level circuit | 3.5.14 | 4.6.15 | | |

4.6 Methods of inspection.

4.6.1 Visual and mechanical examination. Connectors and associated fittings shall be examined to verify that the design, construction, physical dimensions, marking and workmanship are in accordance with the applicable requirements (see 3.1, 3.4, 3.6, and 3.7).

4.6.2 Permeability (see 3.5.1). The permeability of all parts of each connector assembly shall be measured with an indicator conforming to MIL-I-17214.

4.6.3 Insulation resistance (see 3.5.2 and figure 5). Unmated connector assemblies shall be tested in accordance with method 3003 of MIL-STD-1344. The following detail shall apply: Duration of application of test voltage shall be one minute minimum.



Source: https://assist.dla.mil -- Downloaded: 2016-11-16T08:22Z
Check the source to verify that this is the current version before use.

4.6.4 Dielectric withstanding voltage (see 3.5.3 and figure 5). Unmated connector assemblies shall be tested in accordance with method 3001 of MIL-STD-1344. The following details shall apply:

a. Nature of potential: AC.

b. Magnitude of test voltage: See table III.

c. Points of application of test voltage: Between contacts alternately connected and between contacts and body.

4.6.5 Contact retention (see 3.5.4).

4.6.5.1 Nonremovable contacts. Axial loads shall be applied to individual contacts in unmated connectors. The load shall be applied uniformly at a rate of one pound per second in one direction and then the other direction.

4.6.5.2 Removable contacts. The contact shall be inserted and withdrawn 10 times from the same hole. The axial loads shall be applied to individual contacts in unmated connectors. The load shall be applied uniformly (in the normal removal direction) at a rate of one pound per second. The axial load must be maintained a minimum of 30 seconds. The maximum axial displacement is .015 inch after seating of the contact.

4.6.6 Contact insertion and removal forces (see 3.5.5). Contacts shall be inserted and removed from the corresponding connector inserts nine times by means of tools conforming to MIL-I-81969/18 and MIL-I-81969/20. The procedures and instrumentation shall be capable of measuring the force applied parallel to the axis of the contacts. Measurements shall be taken on the first and ninth cycles.

4.6.7 Temperature cycling. Mated connectors shall be tested in accordance with method 1003 of MIL-STD-1344. The following details and exception shall apply:

a. Test condition A, except the high temperature shall be 125°C ± 3°C.

b. Measurements after cycling: Following the temperature cycling test, dielectric withstanding voltage shall be tested as specified in 4.6.4.

4.6.8 Humidity (see 3.5.7 and figure 4). Unmated plugs and receptacles shall be tested in accordance with method 1002, type II, of MIL-STD-1344 except steps 7A and 7B are not required. The following details shall apply:

a. Initial measurements: No measurements are required after initial conditioning, nor voltage applied to connectors during exposure.

b. Final measurement: After completion of step 6 of the final cycle, but no sooner than 1-1/2 hours and not later than 3 hours while the sample is still in the chamber, insulation resistance shall be measured as specified in 4.6.3. Following the insulation resistance test, dielectric withstanding voltage shall be tested as specified in 4.6.4, except the magnitude of test voltage shall be in accordance with table III for a period of 5 minutes, applied between all contacts and the shell.

4.6.9 Vibration (see 3.5.8). Complete mated connectors shall be tested in accordance with method 2005, test condition II of MIL-STD-1344.



Source: https://assist.dla.mil -- Downloaded: 2016-11-16T08:22Z
Check the source to verify that this is the current version before use.

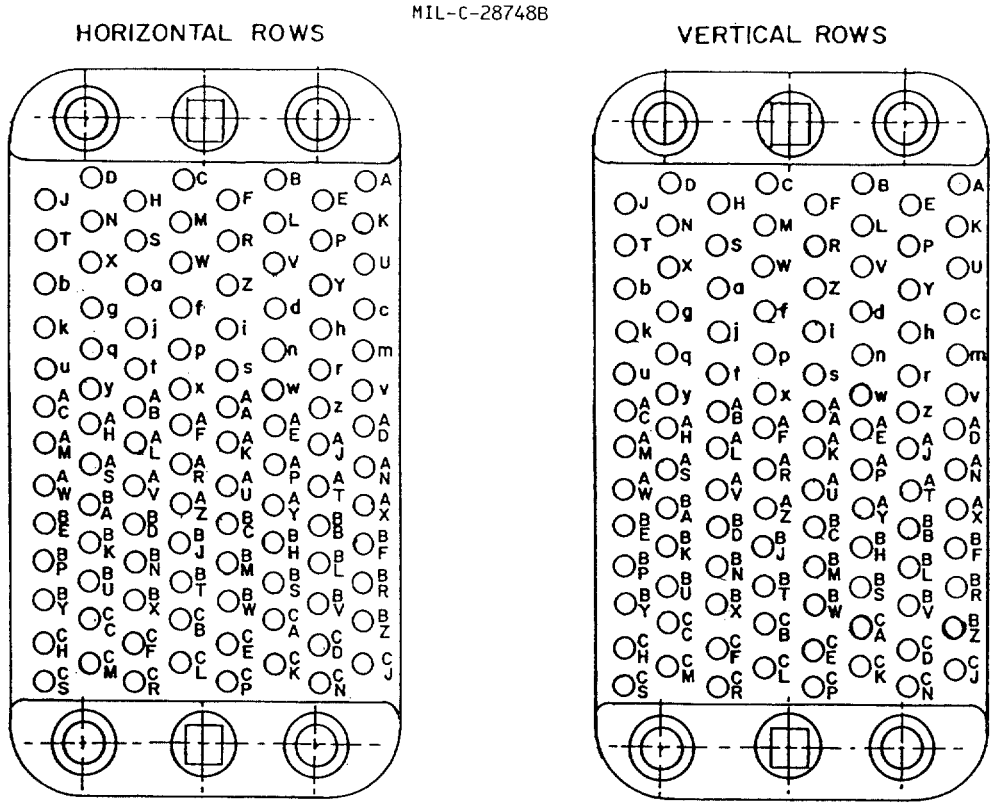


FIGURE 5. Wiring diagram, typical suggested method for insulation resistance, dielectric high potential and moisture resistance tests.

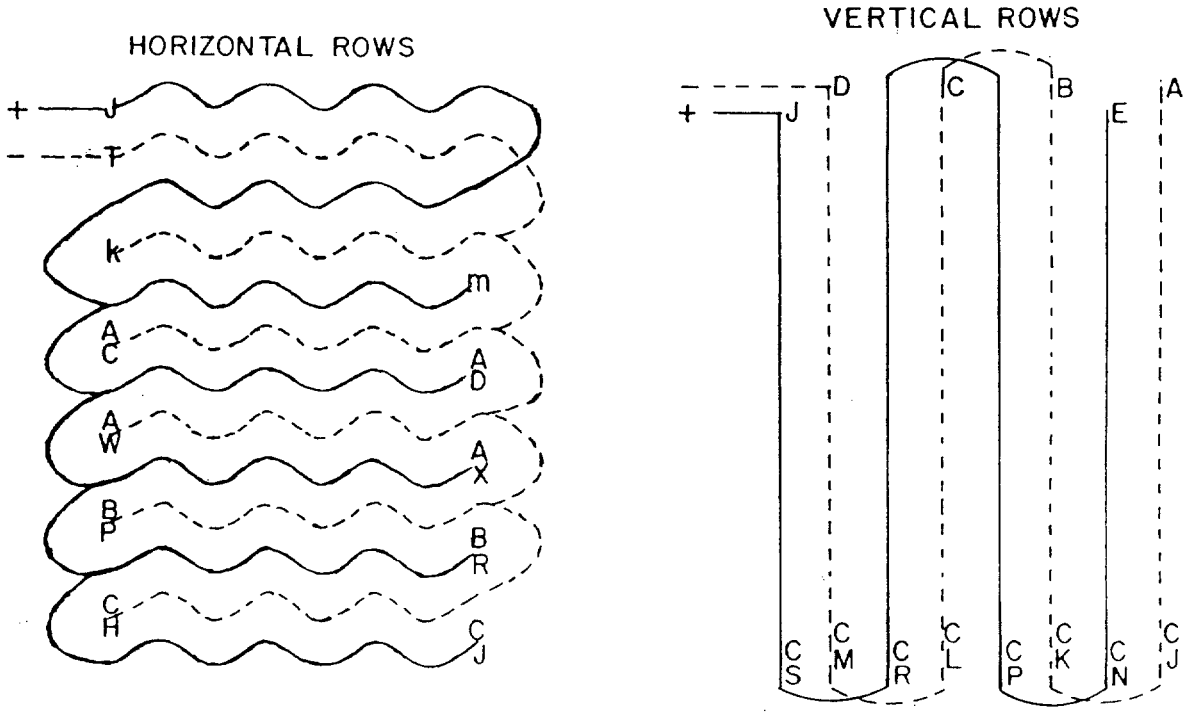


FIGURE 5a. Wiring schematic.



Source: https://assist.dla.mil -- Downloaded: 2016-11-16T08:22Z
Check the source to verify that this is the current version before use.

4.6.10 Shock (specified pulse) (see 3.5.9). Complete mated connectors shall be tested in accordance with method 2004 of MIL-STD-1344. The following details shall apply:

a. Mounting method: In accordance with the mounting fixture in method 2005 of MIL-STD-1344.

b. Test condition I.

c. Measurements: Contacts shall be monitored for electrical continuity during test and connectors shall be examined for evidence of failure of metallic or dielectric materials and engagement of the mated portions after test.

4.6.11 Insertion and withdrawal force (connector assembly) (see 3.5.10). Each connector, with full complement of contacts, shall be mated and unmated. The insertion and withdrawal forces, applied gradually, shall be measured after three cycles.

4.6.12 Durability (see 3.5.11). The complete connector assemblies shall be subjected to 500 cycles of insertion and withdrawal at a rate not to exceed 500 cycles per hour. Tests shall be conducted using normal engaging hardware. The insertions and withdrawals shall be accomplished in a manner similar to that which the connectors shall be subjected in service.

4.6.13 Contact resistance (see 3.5.12). The potential drop across each mated pair of pin and socket contacts shall be measured at rated current as shown in table V. Potential drop readings shall be taken across the two points as shown on figure 6 (A-A). Measurements shall be taken after the temperature of the wire has stabilized and readings shall comply with the initial test values shown in table V.

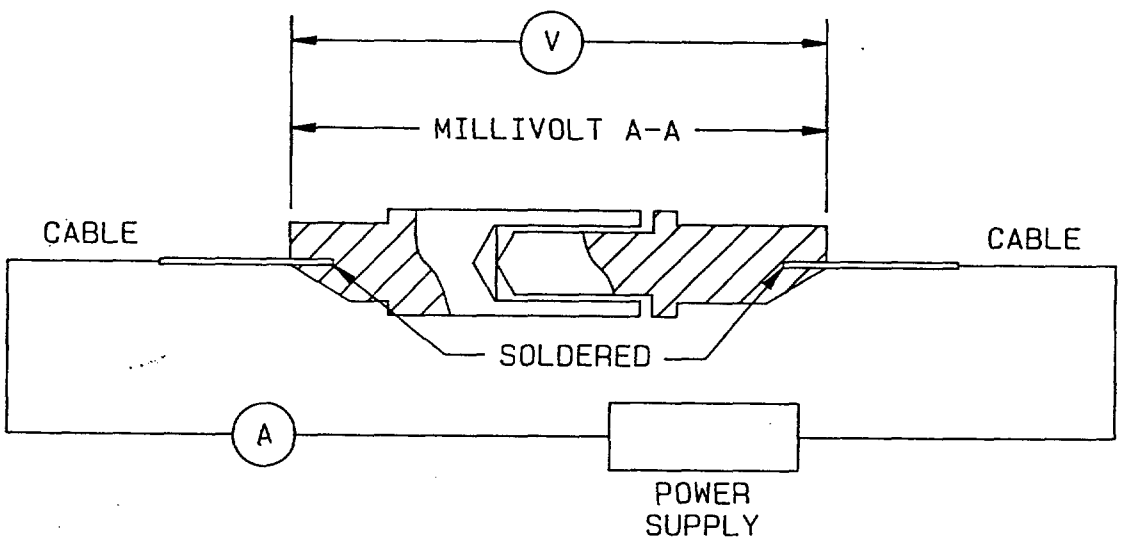


FIGURE 6. Voltage drop test wiring diagram.



Source: https://assist.dla.mil -- Downloaded: 2016-11-16T08:22Z
Check the source to verify that this is the current version before use.

4.6.14 Salt spray (corrosion) (see 3.5.13). The unmated plugs and receptacles, nonremovable contacts (unwired and unmated), and nonremovable contacts mounted in accordance with figure 4 shall be tested in accordance with method 1001 of MIL-STD-1344. The following details shall apply:

a. Test condition B.

b. Measurements after exposure: Immediately after exposure, the exterior surfaces of the connectors and of the individual sets of pin and socket contacts shall be washed with tap water and the connectors and the individual sets of pin and socket contacts shall be dried for 12 hours maximum in a circulating air oven at a temperature of 38°C ± 3°C (100°F ± 5°F). Following the salt spray test, the unmated plugs and receptacles shall be subjected to the dielectric withstanding voltage test specified in 4.6.4, except the magnitude of test voltage shall be in accordance with the "after conditioning" values of table III.

4.6.15 Low level circuit (see 3.5.14). Nonremovable contacts shall be tested in accordance with method 3002 of MIL-STD-1344.

4.6.16 Resistance to test probe damage (nonremovable contacts) (see 3.5.15). Non-removable contacts shall be tested in accordance with method 2006.1 of MIL-STD-1344 and with the bending moment of table XII applied. The contact shall be suitably supported to prevent bending, but the support shall not reinforce the pressure member. The test probe shall consist of a hardened steel pin having a diameter equal to the nominal dimension of the mating pin contact and a spherical radius tip. The test probe shall be free and unsupported, and the socket contact shall be maintained in a horizontal position. For each specified depth, the contact shall be rotated one complete revolution at a uniform rate.

TABLE XII. Bending moment for test probe damage test.

| Contact size | Bend moment (inch-pounds) |
|---|---|
| 16 | 2.0 |
| 20 | 0.5 |
| 22 | 0.125 |

4.6.17 Contact separating forces (nonremovable contacts) (see 3.5.16). Provisions shall be made for mounting socket contacts in a suitable position for applying gradually increasing loads during withdrawal of the minimum diameter hardened test pins. The depth of engagement shall be equal to the maximum length of the pin for the mating connector. Polished test pins conforming to MS3197 of maximum diameter, as shown in table XIII, shall be inserted into and withdrawn from each socket contact three times prior to measurement. Following this procedure, polished test pins conforming to MS3197 of minimum diameter, as specified in table XIII, shall be inserted into each socket contact. Withdrawal forces, applied gradually, shall then be measured.



Source: https://assist.dla.mil -- Downloaded: 2016-11-16T08:22Z
Check the source to verify that this is the current version before use.

4.6.18 Finish thickness.

4.6.18.1 Overall finish. Plating thickness shall be measured in accordance with MIL-G-45204. Measurements shall be made on the external surfaces of the contact body at the locations shown on figure 7.

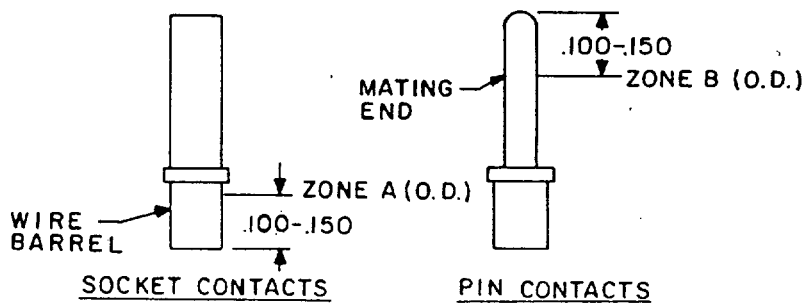


NOTES:
1. Dimensions are in inches.
2. Metric equivalents are given for general information only.

FIGURE 7. Plating thickness measurement - overall finish.



Source: https://assist.dla.mil -- Downloaded: 2016-11-16T08:22Z
Check the source to verify that this is the current version before use.

TABLE XIII. Test pins for measuring contact separating forces.

| Contact size | Maximum diameter | Minimum diameter |
|---|---|---|
| 16 | 0.0635(1.61) | 0.0615(1.56) |
| 20 | 0.0410(1.04) | 0.0390(0.99) |
| 22 | 0.0305(0.77) | 0.0295(0.75) |

NOTES:
1. Dimensions are in inches.
2. Metric equivalents are in parentheses and are for general information only.

4.6.18.2 Localized finish. Finished thickness shall be measured in accordance with MIL-G-45204. Measurements shall be made at point B or C of figure 8 as applicable.

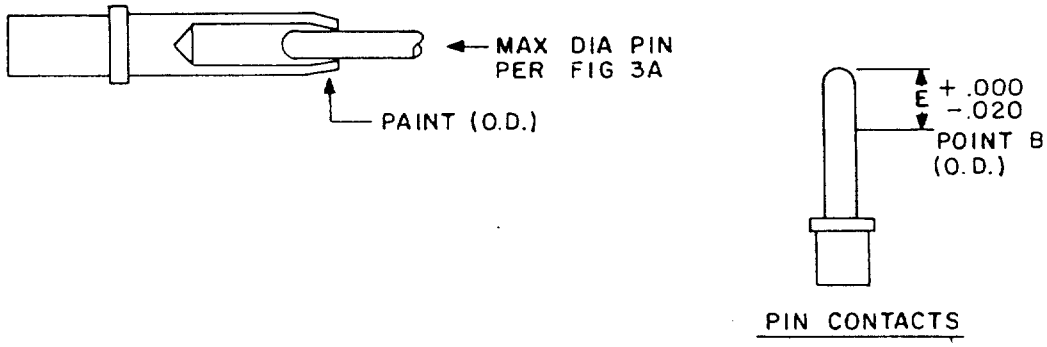


SOCKET CONTACTS WITH INTEGRAL PRESSURE

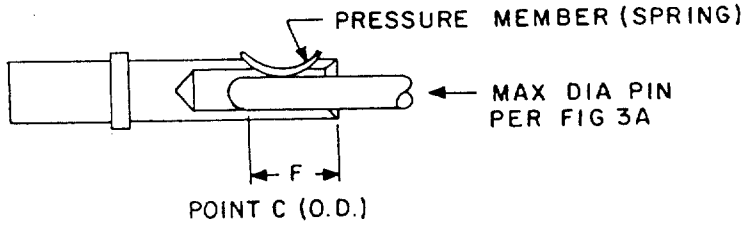


SOCKET CONTACTS WITH SEPARATE PRESSURE MEMBERS

F = LENGTH OF MAX ELECTRICAL CONTACT WIPING AREA PLUS .020 INCH MIN. MAX. WIPE SHALL BE EQUAL TO MAX E OF MATING PIN ENGAGEMENT MINUS THE SPHERICAL RADIUS.

FIGURE 8. Plating thickness measurement - localized finish.



Source: https://assist.dla.mil -- Downloaded: 2016-11-16T08:22Z
Check the source to verify that this is the current version before use.

4.6.19 Industrial gas. Unmated contacts shall be placed on a noncorrosive rack in a closed plastic or glass chamber (volume 2 cubic feet maximum) which contains a 10 percent solution of sulphurated potash NF in distilled water. Contacts shall not be immersed in the solution but shall be exposed to the sulfide vapor for 100 hours.

4.6.20 Solderability (see 3.5.18). Solder type contacts shall be tested in accordance with method 208 of MIL-STD-202.

4.6.21 Resistance to soldering heat (see 3.5.19). All connectors with solder terminations shall be tested in accordance with EIA-364-56. The connectors shall be tested in accordance with procedure 1, unless otherwise specified (see 3.1).

4.6.22 Resistance to solvents (see 3.5.20). Connectors shall be tested in accordance with EIA-364-11. The solvents shall be class 1. The connectors tested shall be fully assembled by normal assembly operations.

4.6.23 Contact pin strength (see 3.5.21). Nonremovable contacts shall be mounted in a suitable fixture and a force (see table VIA) shall be applied to the end of the pin as shown on figure 9. The maximum rate of travel of the tool head of the testing machine shall not exceed 1 inch per minute. The maximum loading time shall not exceed 1 minute. The permanent set shall be the difference between the initial and the final position of the extreme pin tip, immediately after load removal and shall not exceed the limits specified in 3.5.21.

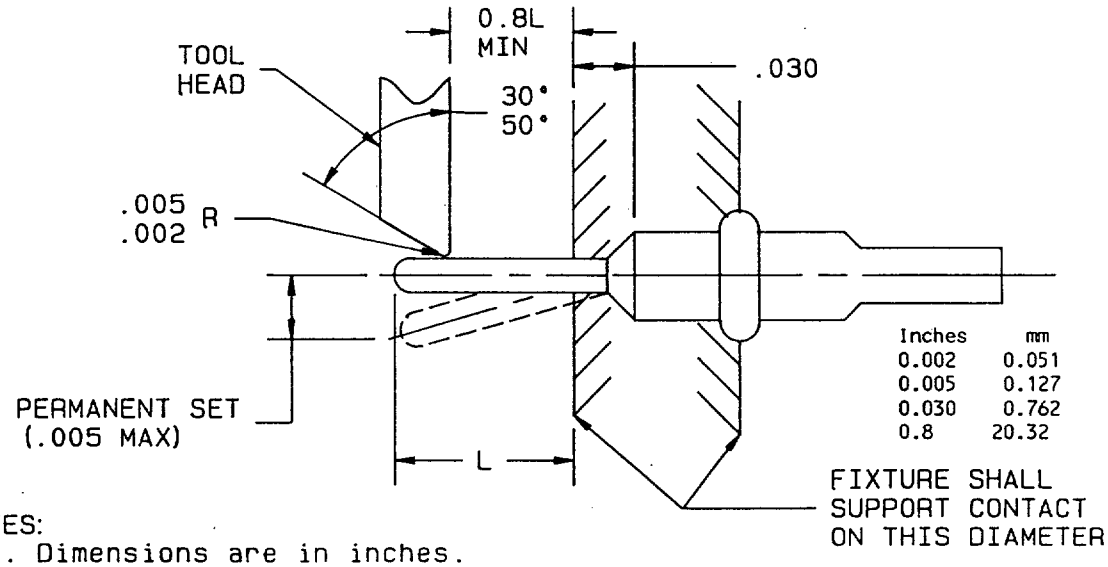


NOTES:
1. Dimensions are in inches.
2. Metric equivalents are given for general information only.

FIGURE 9. Contact strength.



Source: https://assist.dla.mil -- Downloaded: 2016-11-16T08:22Z
Check the source to verify that this is the current version before use.

5. PACKAGING

5.1 Packaging requirements. The requirements for packaging shall be in accordance with MIL-C-55330.

6. NOTES

(This section contains information of a general or explanatory nature that may be helpful, but is not mandatory.)

6.1 Intended use. Connectors and contacts covered by this specification are intended for use in airborne, ground support, and shipboard electrical and electronic equipment.

6.1.1 Insert material. The connectors covered by this specification are composed of an insert made of a suitable insulation material into which are fixed either pins or sockets, with which electrical connections can be made. The specification also covers inserts, so that the units may be purchased separately as required.

6.2 Ordering data.

6.2.1 Acquisition requirements. Acquisition documents should specify the following:

a. Title, number, and date of this specification.

b. Title, number, and date of the applicable specification sheet and the complete military part number (see 3.1).

c. Level of preservation, packaging, packing and marking required (see section 5).

d. Quantity of units per package, if other than one.

e. Whether contacts are included (see 3.4.2.1 and 3.6).

f. Insert material required (see 3.3.3).

6.3 Definitions. For purposes of this specification, the following definitions shall apply:

6.3.1 Connector assembly. A complete connector assembly consists of a mated plug and receptacle.

6.3.2 Receptacle. A connector receptacle is that portion of the connector assembly which is normally "fixed", that is rigidly attached to a supporting surface. It will be provided with pin or socket contacts.

6.3.3 Plug. A connector plug is that portion of the connector assembly which is normally "removable". The plug will be provided with pin or socket contacts.

6.4 Qualification. With respect to products requiring qualification, awards will be made only for products which are at the time set for opening of bids, qualified for inclusion in the applicable qualified products list whether or not such products have actually been so listed by that date. The attention of the contractors is called to this requirement, and manufacturers are urged to arrange to have the products that they propose to offer to the Federal Government tested for qualification, in order that they may be eligible to be awarded contracts or purchase orders for the products covered by this specification. The activity responsible for the qualified products lists is the Space and Naval Warfare Systems Command, Department of the Navy, Washington, D.C. 20363; however, information pertaining to qualification of products may be obtained from the Defense Electronics Supply Center (DESC-E), Dayton, Ohio 45444. Application for qualification tests will be made in accordance with "Provisions Governing Qualification" (see 6.4.1).

6.4.1 Copies of "Provisions Governing Qualification" may be obtained upon application to Commanding Officer, Naval Publications and Forms Center, 5801 Tabor Avenue, Philadelphia, PA 19120.



Source: https://assist.dla.mil -- Downloaded: 2016-11-16T08:22Z
Check the source to verify that this is the current version before use.

6.5 Interchangeability. All complete connectors, including their complement of pin or socket contacts, having the same part number will be completely interchangeable with each other with respect to installation (physical) and performance (function) as specified herein. Suitable evidence, such as dimensional data, may be required by the Government in order to assure that complete connector assemblies will be interchangeable and meet the requirements of this specification.

6.5.1 Removable contacts. All pins and sockets will be capable of being assembled in the molded inserts (see 3.1) and be completely interchangeable with each other with respect to installation (physical) and performance (function) as specified herein. Tools will be capable of properly inserting and removing the pin and socket contacts from the molded inserts. Suitable evidence such as dimensional data, may be required by the Government in order to assure that pins and sockets will be interchangeable and meet the requirements of this specification.

6.5.2 Plugs and receptacles. Plugs and receptacles of a given size and design manufactured by one source to the requirements of this specification, will be capable of mating with associated plugs and receptacles manufactured to the requirements of this specification by other sources.

6.6 Subject key word listing.

Assembly distributor
Contact pin strength
Diallyl phthalate
Localized finish
Polyphenylene sulfide
Shields and shells

6.7 Changes from previous issue. Marginal notations are not used in this revision to identify changes with respect to the previous issue due to the extensiveness of the changes.



Source: https://assist.dla.mil -- Downloaded: 2016-11-16T08:22Z
Check the source to verify that this is the current version before use.

CONCLUDING MATERIAL

Custodians:
Army - CR
Navy - EC
Air Force - 85

Review activities:
Army - AR, AT, MI
Navy - AS, OS, SH
Air Force - 11, 17, 99
DLA - ES

User activities:
Army - AV, ME
Navy - MC, OS

Preparing activity:
Navy - EC

Agent:
DLA - ES

(Project 5935-3771)



Source: https://assist.dla.mil -- Downloaded: 2016-11-16T08:22Z
Check the source to verify that this is the current version before use.