INCH-POUND

MIL-STD-2042-2(SH)
7 July 1993

MILITARY STANDARD

FIBER OPTIC TOPOLOGY INSTALLATION STANDARD METHODS FOR NAVAL SHIPS (EQUIPMENT)

(PART 2 OF 6 PARTS)

AMSC N/A

AREA GDRQ

DISTRIBUTION STATEMENT A. Approved for public release; distribution is unlimited.

Source: https://assist.dla.mil -- Downloaded: 2016-12-10T07:53Z
Check the source to verify that this is the current version before use.

FOREWORD

DEPARTMENT OF THE NAVY
NAVAL SEA SYSTEMS COMMAND
WASHINGTON, DC 20362-5101

1. This Military Standard is approved for use by the Naval Sea Systems Command, Department of the Navy, and is available for use by all Departments and Agencies of the Department of Defense.

2. Beneficial comments (recommendations, additions, deletions) and any pertinent data which may be of use in improving this document should be addressed to: Commander, Naval Sea Systems Command, SEA 05Q42, Department of the Navy, Washington, DC 20362-5101 by using the self-addressed Standardization Document Improvement Proposal (DD Form 1426) appearing at the end of this document or by letter.

3. This standard provides detailed information and guidance to personnel concerned with the installation of fiber optic topologies on Naval surface ships and submarines. The methods specified herein are not identifiable to any specific ship class or type, but are intended to standardize and minimize variations in installations to enhance the compatibility of the fiber optic topologies of all Naval ships.

4. In order to provide flexibility in the use and update of the installation methods, this standard is issued in seven parts; the basic standard and six numbered parts as follows:

Part 1 Cables
Part 2 Equipment
Part 3 Cable Penetrations
Part 4 Cableways
Part 5 Connectors and Interconnections
Part 6 Tests

Source: https://assist.dla.mil -- Downloaded: 2016-12-10T07:53Z
Check the source to verify that this is the current version before use.

CONTENTS

PARAGRAPH		PAGE
1.	SCOPE	1
1.1	Scope	1
1.1.1	Applicability	1
2.	APPLICABLE DOCUMENTS	2
2.1	Government documents	2
2.1.1	Specifications and standards	2
2.2	Non-Government publications	3
2.3	Order of precedence	3
3.	DEFINITIONS	4
3.1	General fiber optics terms	4
3.2	Fiber optic topology	4
3.3	Authorized approval	4
3.4	Installing activity	4
3.5	Local cable	4
3.6	Trunk cable	4
3.7	Minimum bend radius	4
3.8	Primary channel	4
3.9	Alternate channel	4
3.10	Non-redundant channel (NRC)	4
3.11	Dedicated fiber	5
3.12	Spare fibers	5
3.13	Allocated and used fiber	5
3.14	Allocated and not used fiber	5
3.15	Optical fiber cable component (OFCC)	5
4.	GENERAL REQUIREMENTS	6
4.1	Fiber optic equipment installation	6
4.1.1	Interconnection box selection	6
4.1.2	Location	6
4.1.3	Interconnection box mounting	7
4.1.3.1	Bonding, grounding, and shielding	7
4.1.3.2	Holes drilled in beams	7
4.1.3.3	Welding	7
4.1.3.4	Fasteners	7
4.1.3.5	Dissimilar metals	7
4.2	Cable entrance to equipment	8
4.2.1	Cable slack	8
4.2.2	Cable forming and shaping	9
4.2.3	Splice assembly and alignment	9
4.2.4	Interconnection organization	9
4.2.4.1	Connector organization	10
4.2.4.2	Splice organization	10
4.2.5	Nameplates and marking	11

Source: https://assist.dla.mil -- Downloaded: 2016-12-10T07:53Z
Check the source to verify that this is the current version before use.

CONTENTS

PARAGRAPH PAGE

4.3 Safety precautions 12

5. DETAILED REQUIREMENTS 13
5.1 Fiber optic interconnection equipment installation 13
5.1.1 Non-watertight decks and bulkheads 13
5.1.2 Watertight decks and bulkheads 13
5.1.3 Stanchions 13
5.1.4 Metal joiner bulkheads 13
5.1.5 Expanded metal or wire mesh bulkhead 14
5.1.6 Refrigerated spaces 14
5.1.7 GRP (glass reinforced plastic) bulkheads 14
5.1.8 Locking devices for installations on submarines . 14
5.2 Cable entrance to equipment 14
5.2.1 Nylon stuffing tubes 14
5.2.2 Multiple cable penetrator (MCP) 14
5.2.3 Cable clamps 14
5.3 Interconnection organization 15
5.4 Splice assembly and alignment 15

6. NOTES 16
6.1 Intended use 16
6.2 Issue of DODISS 16
6.3 Standard method designation 16
6.4 Subject term (key word) listing 16

METHOD
2A1 Cable entrance to equipment via nylon stuffing tubes 2A1-1
2B1 Cable entrance to equipment via MCP 2B1-1
2C1 Cable and buffered fiber forming and shaping . . 2C1-1
2D1 Splice assembly and alignment 2D1-1

TABLE
2A1-I Equipment and materials. 2A1-1
2A1-II Nylon stuffing tube sizes for fiber optic cable. 2A1-2
2A1-III Nylon stuffing tube data 2A1-3
2B1-I Equipment and materials. 2B1-1
2B1-II MCP data and insert block sizes for fiber optic cables 2B1-2
2C1-I Equipment and materials 2C1-1
2D1-I Equipment and materials. 2D1-1

Source: https://assist.dla.mil -- Downloaded: 2016-12-10T07:53Z
Check the source to verify that this is the current version before use.

CONTENTS

FIGURE		PAGE
2-1	Configuration of patch panel - (typical)	10
2-2	Configuration of splice module -(typical)	10
2-3	Configurations of splice tray - (typical)	11
2A1-1	Straight tube	2A1-4
2A1-2	"Y" (45°) tube	2A1-5
2A1-3	90° angle tube	2A1-5
2A1-4	NPT tube	2A1-5
2B1-1	Interconnection box integral MCP-(typical)	2B1-3
2C1-1	Forming and shaping - (typical)	2C1-3
2C1-2	Compressing ferrule springs	2C1-5
2C1-3	Splices installed in splice tray - (typical)	2C1-5
2D1-1	Opening alignment sleeve	2D1-2
2D1-2	Inserting ferrule into alignment sleeve	2D1-2
2D1-3	Inserting second ferrule into alignment sleeve	2D1-3
2D1-4	Aligning tabs	2D1-3
2D1-5	Power Meter Cable hookup- (typical)	2D1-4

Source: https://assist.dla.mil -- Downloaded: 2016-12-10T07:53Z
Check the source to verify that this is the current version before use.

1. SCOPE

1.1 Scope. This standard provides detailed methods for the installation of fiber optic topology equipment (see 3.2) only, and fiber optic cable entry to topology and other equipment.

1.1.1 Applicability. These criteria apply to installations on specific ships when invoked by the governing ship specification or other contractual document. They are intended primarily for new construction; however, they may also be used for the conversion or alteration of existing ships. The rapidly changing state of the art in fiber optic technology makes it essential that some degree of flexibility be exercised in enforcing this document. When there is a conflict between this document and the ship specification or contract, the ship specification or contract shall take precedence. Where ship design is such that the methods herein cannot be implemented, users shall submit new methods or modifications of existing methods to NAVSEA 06KR22 for approval prior to implementation.

Source: https://assist.dla.mil -- Downloaded: 2016-12-10T07:53Z
Check the source to verify that this is the current version before use.

2. APPLICABLE DOCUMENTS

2.1 Government documents.

2.1.1 Specifications and standards. The following specifications and standards form a part of this document to the extent specified herein. Unless otherwise specified, the issues of these documents are those listed in the issue of the Department of Defense Index of Specifications and Standards (DODISS) and supplement thereto, cited in the solicitation (see 6.2).

SPECIFICATIONS

MILITARY

MIL-P-15024/5	- Plates, Identification.
MIL-S-19622	- Stuffing Tubes, Nylon; and Packing Assemblies; General Specification for.
MIL-S-24235	- Stuffing Tubes, Metal and Packing Assemblies for Electric Cables, General Specification for.
MIL-S-24623/4	- Splice, Fiber Optic, Housing, Fiber.
MIL-I-24728	- Interconnection Box, Fiber Optic, Metric, General Specification for.

STANDARDS

MILITARY

MIL-STD-278	- Welding and Casting Standard.
MIL-STD-461	- Electromagnetic Emission and Susceptibility Requirements for the Control of Electromagnetic Interference.
MIL-STD-889	- Dissimilar Metals.
MIL-STD-1310	- Shipboard Bonding, Grounding, and other Techniques for Electromagnetic Compatibility and Safety.

Source: https://assist.dla.mil -- Downloaded: 2016-12-10T07:53Z
Check the source to verify that this is the current version before use.

DOD-STD-2003 - Electric Plant Installation Standard Methods for Surface Ships and Submarines.

DOD-STD-2003-1 - Electric Plant Installation Standard Methods for Surface Ships and Submarines (Cable).

DOD-STD-2003-2 - Electric Plant Installation Standard Methods for Surface Ships and Submarines (Equipment).

DOD-STD-2196 - Glossary, Fiber Optics.

MIL-STD-2042-1 - Fiber Optic Topology Installation Standard Methods for Naval Ships (Cables).

MIL-STD-2042-5 - Fiber Optic Topology Installation Standard Methods for Naval Ships (Connections and Interconnections).

MIL-STD-2042-6 - Fiber Optic Topology Installation Standard Methods for Naval Ships (Tests).

(Unless otherwise indicated, copies of federal and military specifications standards, and handbooks are available from the Standardization Documents Order Desk, Building 4D, 700 Robbins Ave, Philadelphia, PA, 19111-5094.)

2.2 Non-Government publications. The following documents form a part of this document to the extent specified herein. Unless otherwise specified, the issues of the documents which are DoD adopted are those listed in the issue of the DODISS cited in the solicitation. Unless otherwise specified, the issues of documents not listed in the DODISS are the issues of the documents cited in the solicitation (see 6.2).

AMERICAN NATIONAL STANDARDS INSTITUTE (ANSI)
ANSI Z136.1 - Laser, safe use of - 23 May 1986
(Application for copies should be addressed to the American National Standards Institute, 1430 Broadway, New York, NY 10018-3308.)

2.3 Order of precedence. In the event of a conflict between the text of this document and the references cited herein, the text of this document takes precedence. Nothing in this document, however, supersedes applicable laws and regulations unless a specific exemption has been obtained.

Source: https://assist.dla.mil -- Downloaded: 2016-12-10T07:53Z
Check the source to verify that this is the current version before use.

3. DEFINITIONS

3.1 General fiber optics terms. Definitions for general fiber optics terms used in this standard are in accordance with DOD-STD-2196. Definitions for other terms as they are used in this standard are given in the following paragraphs.

3.2 Fiber optic topology. The fiber optic topology consists of fiber optic interconnection boxes, trunk and local cables and the connectors and splices used to interconnect the trunk and local cables.

3.3 Authorized approval. Authorized approval is written approval from the cognizant Government activity.

3.4 Installing activity. An installing activity is any military, commercial, or industrial organization involved with the installation of fiber optic topologies aboard Naval ships.

3.5 Local cable. A local cable is a fiber optic cable that provides a continuous optical path between an end user equipment and an interconnection box, and is typically not run through the main cableways.

3.6 Trunk cable. A trunk cable is a fiber optic cable that provides a continuous optical path between interconnection boxes. Typically, trunk cables are run in the main cableways and have higher fiber counts per cable than local cables.

3.7 Minimum bend radius. The minimum bend radius of a fiber optic cable (and OFCC, see 3.15) is the radius at which the cable can be bent without degrading optical performance. The dynamic bend applies during handling and installing; the static bend applies to the completed installation.

3.8 Primary channel. A primary channel is an allocated and used active link between system equipment that has a designated active backup link.

3.9 Alternate channel. An alternate channel is the allocated and used active backup link for a primary channel.

3.10 Non-redundant channel (NRC). A non-redundant channel is any allocated and used active link that has no system required backup link, but is provided with redundant trunk fibers by the topology.

Source: https://assist.dla.mil -- Downloaded: 2016-12-10T07:53Z
Check the source to verify that this is the current version before use.

3.11 Dedicated fiber. A dedicated fiber is a fiber that is designated for use between an interconnection box and an interconnection box in damage control.

3.12 Spare fibers. A system spare fiber is an allocated and not used fiber designated for a particular system. A fiber optic cable plant spare fiber is an unallocated fiber.

3.13 Allocated and used fiber. An allocated and used fiber is a fiber that is designated and required for use for a particular system link.

3.14 Allocated and not used fiber. An allocated and not used fiber is a fiber that is designated but not actively used for a particular system.

3.15 Optical fiber cable component (OFCC). An OFCC is a buffered fiber augmented with a concentric layer of strength members and an overall jacket.

Source: https://assist.dla.mil -- Downloaded: 2016-12-10T07:53Z
Check the source to verify that this is the current version before use.

4. GENERAL REQUIREMENTS

4.1 Fiber optic equipment installation. The methods specified herein are for installing the fiber optic topology equipment, which consists of interconnection boxes in accordance with MIL-I-24728. They may be extended to other fiber optic equipment only after obtaining authorized approval (see 3.3).

4.1.1 Interconnection box selection. The interconnection boxes selected shall be those identified in the ship specifications and drawings. Substitute boxes shall not be used without authorized approval (see 3.3). In those instances where the installing activity (see 3.4) is responsible for interconnection box selection, the box type shall be selected from MIL-I-24728. The box shall be sized to provide sufficient capacity to accept the total number of fibers entering the box as specified by the ship specification and system drawings plus a minimum of 20 percent additional unused termination spaces for growth. For boxes with both patch panels and splice trays, the number of unused spaces can be any combination of the two.

4.1.2 Location. Boxes shall be located in accordance with the system drawings. In those instances where the installing activity is responsible for selecting box location, the following requirements apply:

a. In instances where a box interfaces directly with only one end user, the box shall be located as close as possible to that equipment without interfering with any other systems or violating any other requirements specified herein. If a box interfaces directly with two or more end users, the box shall be so located as to keep the majority of local cable (see 3.5) runs as short as possible. For equipment with redundant local cables the boxes that connect these local cables to the topology trunk cables (see 3.6) shall be located in different compartments.

b. Boxes shall be located in spaces protected from the weather whenever possible. Boxes shall not be installed in voids or inaccessible spaces. If mounting the box within gun or missile blast areas cannot be avoided, it shall be located clear of maximum deflection or whip of bulkheads and deck plating.

Source: https://assist.dla.mil -- Downloaded: 2016-12-10T07:53Z
Check the source to verify that this is the current version before use.

c. Box location shall provide ready access and entry for maintenance. No part of the box shall be at a height greater than 7 feet above the deck, with the preferred maximum height being 5 feet. There shall be a minimum of 2 feet of clearance in front of the box.

4.1.3 Interconnection box mounting. Interconnection boxes shall be mounted in accordance with methods specified in 5.1. For interconnection boxes with hinges, the lid hinge shall be at the bottom of bulkhead mounted boxes.

4.1.3.1 Bonding, grounding, and shielding. Boxes that contain active fiber optic components, such as switches, shall be bonded, grounded, and shielded in accordance with MIL-STD-1310. Bonding, grounding, and shielding inside the box shall be in accordance with MIL-STD-1310 and MIL-STD-461.

4.1.3.2 Holes drilled in beams. Holes drilled in structural members for passing cables or securing equipment shall be on the neutral axis of the beam or between the neutral axis and the point of attachment. Reinforcement of holes, where required, shall be in accordance with the applicable ship specification.

4.1.3.3 Welding. Unless otherwise noted, welding of studs, step hangers, tapped pads, mounting pads, and extension hangers shall be in accordance with MIL-STD-278. Any required tapping shall be done before welding.

4.1.3.4 Fasteners. Material for the bolts, nuts, machine screws and washers used to fasten boxes to decks and bulkheads shall be as specified in the ship specification and drawings, and in the methods described herein. Locking devices in accordance with ship specifications shall be used for bolts that secure the boxes. Through-bolts and self-locking nuts shall be used to mount boxes located:

a. In gun mounts.

b. In missile launch areas.

c. In submarine battery compartments above the level of the lowest cell tops.

4.1.3.5 Dissimilar metals. Where design requirements preclude the isolation of incompatible metal combinations, as identified in MIL-STD-889, from one another, the area in contact shall, as a minimum, be coated, treated, or otherwise insulated against corrosion in accordance with Appendix A of MIL-STD-889.

Source: https://assist.dla.mil -- Downloaded: 2016-12-10T07:53Z
Check the source to verify that this is the current version before use.

4.2 Cable entrance to equipment. Fiber optic cables shall enter equipment in accordance with methods described herein and as follows:

a. Cables shall enter splashproof, spraytight, watertight, submersible, and explosionproof equipment through multiple cable penetrators (MCP's) integral to the equipment or through stuffing tubes. When stuffing tubes are used, entrance shall be made through the bottom or sides of the equipment where possible. Stuffing tubes used to enter splashproof, spraytight, or watertight equipment shall be nylon in accordance with MIL-S-19622. Stuffing tubes used to enter submersible (50 foot) and explosionproof equipment shall be metal in accordance with MIL-S-24235.

b. Cables shall enter molded plastic equipment through nylon stuffing tubes.

c. The entrance of cables via connector plugs and receptacles shall be as specified on the applicable ship or system drawings.

4.2.1 Cable slack. Cables shall be secured to ship structure as close as possible to the equipment without violating cable static bend radius (see 3.7) requirements of not less than eight times the cable outside diameter (O.D.). Cables entering hard-mounted equipment shall have sufficient slack between the equipment and the last point of cable support, to prevent damage to the cable caused by vibration. Cables connected to equipment provided with resilient or shock mounts shall have a minimum length of 18 inches (457 mm) with not less than 3 inches (76 mm) of slack between the equipment and the last point of support of the cable to provide for flexibility and movement of the equipment under shock, vibration, and in-service loading. Cables terminated in a heavy duty (multiple terminus) connector shall have an additional minimum of 5 inches (127 mm) of slack in the cableway from which the cable exits to provide for two reconnections. For cables that enter equipment by way of stuffing tubes or MCP's, there shall be enough slack inside the equipment for a minimum of two reconnections. Where connectors are used for cable entrance to equipment, the cables shall be installed such that the connectors may be easily removed.

Source: https://assist.dla.mil -- Downloaded: 2016-12-10T07:53Z
Check the source to verify that this is the current version before use.

4.2.2 Cable forming and shaping. Optical Fiber Cable Components (OFCC's) and buffered fibers within interconnection boxes shall be routed around the inside edges of the box such that they do not block or otherwise obstruct access to any connections within the box. The group or bundle shall be protected from possible damage on sharp edges by using clamps or tubing. Care shall be taken when attaching the group or bundle as shown in the methods herein to prevent kinking or cutting the OFCC jackets and to ensure that bends do not violate the OFCC minimum dynamic bend radius of four times the OFCC O.D. and the minimum static bend radius of eight times the OFCC O.D.

4.2.3 Splice assembly and alignment. The mating and alignment of splice ferrules shall be accomplished after they enter the interconnection box as specified herein. The fiber optic splice ferrules shall be installed on the buffered fibers in accordance with Method 5C1 in Part 5 of this standard.

4.2.4 Interconnection organization. Fiber optic splices shall be installed in the splice tray mounted in the interconnection box. The splice tray shall be in accordance with MIL-S-24623/4. Fiber optic connectors and adapters shall be mounted on the optical patch panels provided with the interconnection box. The position of each connector or splice shall be in accordance with system drawings. Unterminated fibers shall be tied off in the bundle. One unused connection/splice space shall be reserved for each unterminated fiber. If the installing activity is responsible for the internal configuration of the interconnection box, the configuration shall be in accordance with 4.2.4.1 and 4.2.4.2.

Source: https://assist.dla.mil -- Downloaded: 2016-12-10T07:53Z
Check the source to verify that this is the current version before use.

4.2.4.1 Connector organization. The individual patch panels shall be filled starting with the row closest to the inside of the box and working outward (see figure 2-1).

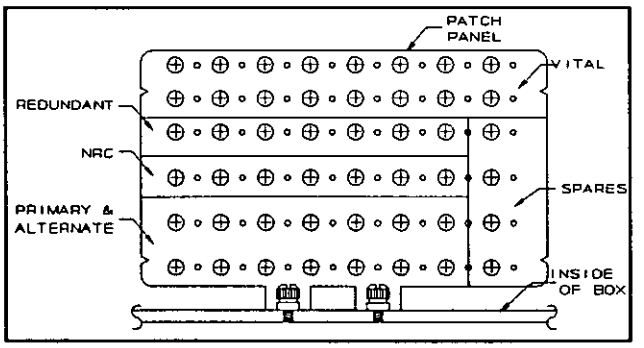

FIGURE 2-1. Configuration of patch panel - (typical).

Primary and alternate channel fibers (see 3.8 and 3.9) shall be located nearest the inside of the box. Non-redundant channel (NRC) fibers (see 3.10) shall be located in a separate row with corresponding redundant fibers located in the row immediately above. Spare fibers (see 3.12) shall be located in close proximity to their respective primary, alternate and NRC channel fibers. Dedicated fibers, if required, shall be located in the topmost section of the panel leaving the unused adapters closest to the outside of the box.

4.2.4.2 Splice organization. The splice module shall be filled as shown in figure 2-2. Each splice tray shall be filled starting closest to the rear of the box and working towards the front. Figure 2-3 shows typical splice tray configurations.

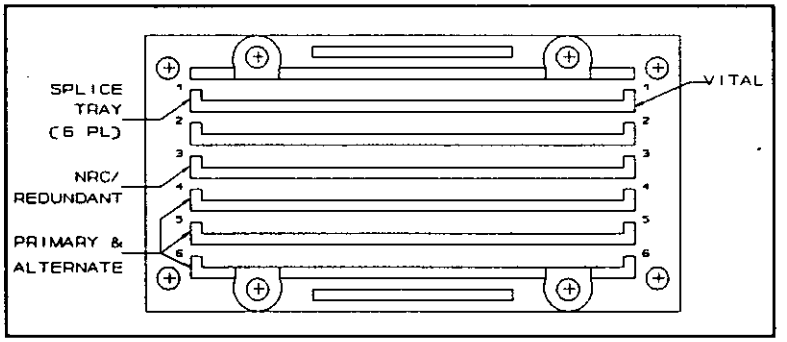

FIGURE 2-2. Configuration of splice module -(typical).

Source: https://assist.dla.mil -- Downloaded: 2016-12-10T07:53Z
Check the source to verify that this is the current version before use.

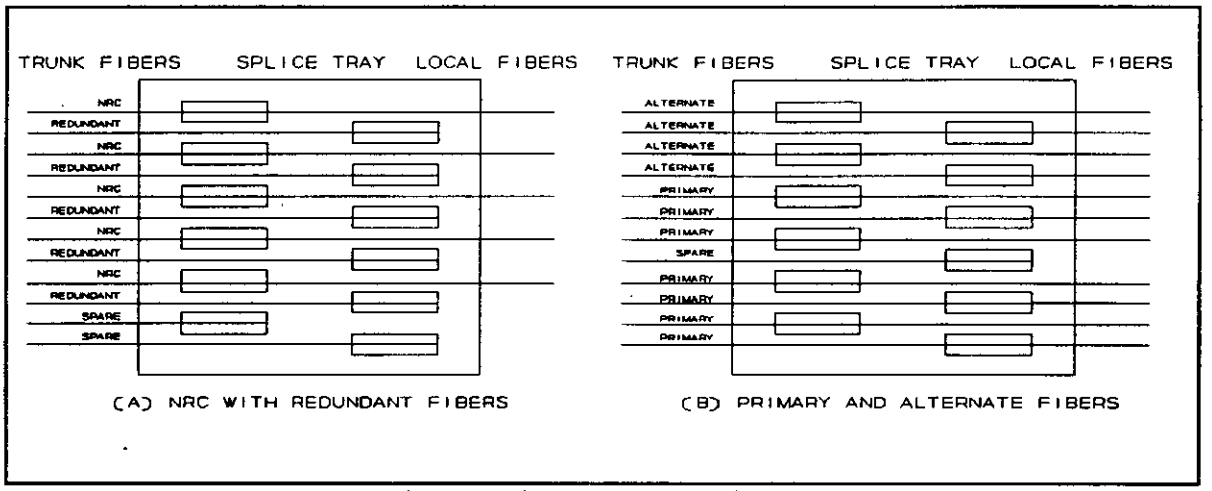

FIGURE 2-3. Configurations of splice tray - (typical).

4.2.5 Nameplates and marking. Nameplates shall be provided for all equipment and shall be in accordance with MIL-P-15024/5. Marking shall be as specified in the ship specification, applicable drawings, and the requirements herein. Interconnection box identification and location plates shall be located on the outside of the hinged cover. Each connector or adapter position on the optical patch panels shall be marked. Splice trays shall be marked to identify each splice position, or a chart shall be attached in the box interior detailing the splice position numbers. A configuration chart showing all the connections within the box shall be permanently attached to the inside of the box lid. The input and output cable and fiber numbers and the connector or splice position number shall be shown for each connection. For those unterminated fibers, the chart shall show the splice tray position or patch panel adapter number reserved for each fiber. In those instances where lasers are used as the optical source, each interconnection box shall be internally marked in accordance with ANSI Z136.1. Cable marking shall be in accordance with Part 1 of this standard.

4.3 Safety precautions. The following safety precautions apply:

a. Observe all written safety precautions given in the methods of this standard.

b. Observe all warning signs on equipment and materials.

Source: https://assist.dla.mil -- Downloaded: 2016-12-10T07:53Z
Check the source to verify that this is the current version before use.

c. The classification of a laser is based on the ability of the optical beam to cause damage to the eye. Under normal operating conditions, an optical fiber communication system (OFCS) is inherently an eye safe system; but, when an optical fiber connection is broken and optical viewing instruments are used, it is possible that hazardous energy can enter the eye. For this reason four service group hazard classes have been devised to indicate the degree of hazard and required hazard control measures. Refer to ANSI Z136.2 for a full technical definition. The following laser safety precautions shall apply:

(1) Ensure personnel are familiar with the laser degree of hazard and the required control measures.

(2) Light generated by light emitting diodes (LED's) and laser diodes may not be visible but is still hazardous to the unprotected eye. Never look into the end of an optical fiber connected to an LED or laser diode and do not examine or stare into broken, severed or disconnected optical cables.

(3) When access panels or doors are removed or opened and the critical viewing distance could exceed 39 inches (100 cm), use means to contain the beam to preclude exposure of nearby personnel.

(4) Do not view the primary beam or a specular reflection from an OFCS with an optical microscope, eye loupe or other viewing instrument. The instrument may create a hazard due to its light gathering capability.

d. Safety glasses shall be worn when handling bare fibers. Always handle cable carefully to avoid personal injury. The ends of optical fibers are extremely sharp and can lacerate or penetrate the skin or cause permanent eye damage if touched. If the fiber penetrates the skin, it most likely will break off, in which case the extraction of the fiber should be performed by trained medical personnel to prevent further complications.

e. Wash hands after handling bare fibers.

Source: https://assist.dla.mil -- Downloaded: 2016-12-10T07:53Z
Check the source to verify that this is the current version before use.

5. DETAILED REQUIREMENTS

5.1 Fiber optic interconnection equipment installation. The methods covered here are applicable to the fiber optic interconnection boxes.They may be extended to the other fiber optic interconnection equipment only after obtaining authorized approval. The mounting of these boxes on ship structure is the same as the standard mounting methods of electrical enclosures given in DOD-STD-2003-2. These methods will not be repeated in this standard; however, they are identified and listed here to aid the user in rapidly locating the applicable method in DOD-STD-2003-2 to be used for installing the fiber optic interconnection box.

5.1.1 Non-watertight decks and bulkheads. The following methods shall be used to install the interconnection box on non-watertight decks and bulkheads:

a. Steel decks and bulkheads: DOD-STD-2003-2, Figure 2A1 or 2A4.

b. Aluminum decks and bulkheads: DOD-STD-2003-2, Figure 2A6 or 2A8.

5.1.2 Watertight decks and bulkheads. The following methods shall be used to install the interconnection box on watertight decks and bulkheads:

a. Steel decks and bulkheads: DOD-STD-2003-2, Figure 2A1 or 2A2.

b. Aluminum decks and bulkheads: DOD-STD-2003-2, Figure 2A6 or 2A7.

5.1.3 Stanchions. The following methods shall be used to install the interconnection box on stanchions:

a. Steel stanchion: DOD-STD-2003-2, Figure 2A5.

b. Aluminum stanchion: DOD-STD-2003-2, Figure 2A9.

5.1.4 Metal joiner bulkheads. The following method shall be used to install the interconnection box on metal joiner bulkheads:

DOD-STD-2003-2, Figure 2A11.

Source: https://assist.dla.mil -- Downloaded: 2016-12-10T07:53Z
Check the source to verify that this is the current version before use.

5.1.5 Expanded metal or wire mesh bulkhead. The following methods shall be used to install the interconnection box on expanded metal or wire mesh bulkheads:

DOD-STD-2003-2, Figure 2A12 or 2A13.

5.1.6 Refrigerated spaces. The following method shall be used to install the interconnection box in refrigerated spaces:

DOD-STD-2003-2, Figure 2A16.

5.1.7 GRP (glass reinforced plastic) bulkheads. The following methods shall be used to install the interconnection box on GRP bulkheads:

DOD-STD-2003-2, Figure 2A23 or 2A24 and Figure 2A25.

5.1.8 Locking devices for installations on submarines. Locking devices on the following method shall be used in the installation of the interconnection box on submarines:

DOD-STD-2003-2, Figure 2A21.

5.2 Cable entrance to equipment. Fiber optic cable entrance into equipment may employ the same devices (i.e., stuffing tubes and cable clamps) used for electric cable entrance into equipment. When these devices are used and the procedures are the same for both cable types, the methods will not be repeated in this standard. However, the methods are identified and listed here to aid the user in rapidly locating the applicable method in DOD-STD-2003. Methods unique to fiber optic cable or that differ from those for electric cable shall be in accordance with this standard.

5.2.1 Nylon stuffing tubes. Cable entry into spraytight, splashproof, molded plastic and watertight equipment via nylon stuffing tubes shall be in accordance with Method 2A1 in this part of this standard.

5.2.2 Multiple cable penetrator (MCP). Cable entry into equipment via integral MCP's shall be in accordance with Method 2B1 in this part of this standard.

5.2.3 Cable clamps. The following method shall be used for cable entry into equipment not listed in 5.2.1 or 5.2.2: DOD-STD-2003-1, Figure 1B3.

Source: https://assist.dla.mil -- Downloaded: 2016-12-10T07:53Z
Check the source to verify that this is the current version before use.

5.3 Interconnection organization. The organization of the splices, connectors and adapters and the shaping of the OFCC's and buffered fibers within the interconnection box shall be in accordance with Method 2C1 in this part of this standard.

5.4 Splice assembly and alignment. The interconnection of splice ferrules within the interconnection box shall be in accordance with Method 2D1 in this part of this standard.

Source: https://assist.dla.mil -- Downloaded: 2016-12-10T07:53Z
Check the source to verify that this is the current version before use.

6. NOTES

(This section contains information of a general or explanatory nature that may be helpful, but is not mandatory.)

6.1 Intended use. The methods for equipment mounting and cable entrance to equipment depicted in this standard are intended primarily for new construction; however, they may be used for conversion or alteration of existing ships.

6.2 Issue of DODISS. When this standard is used in acquisition, the applicable issue of the DODISS must be cited in the solicitation (see 2.1.1 and 2.2).

6.3 Standard method designation. To simplify the usage of this standard, an alpha-numeric designation system was developed to identify and locate a given method. The methods were grouped together by function as follows:

Group A: Cable entrance to equipment via nylon stuffing tubes.
B: Cable entrance to equipment via MCP.
C: Cable and buffered fiber forming and shaping.
D: Splice assembly and alignment.

Then the designation system was completed as follows:

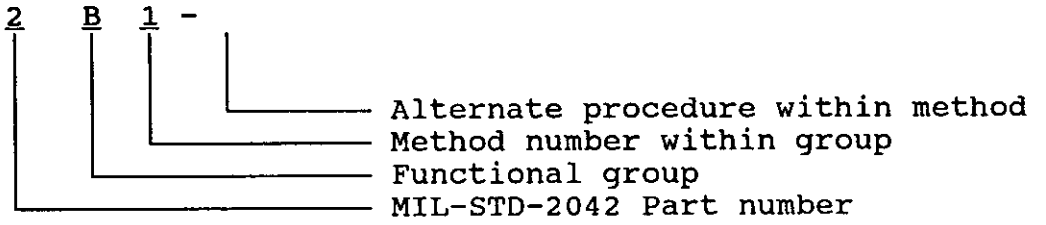

Thus, method 2B1 indicates there is no alternate procedure for method 1 of group B in Part 2 (MIL-STD-2042-2) of MIL-STD-2042.

6.4 Subject term (key word) listing.

Fiber optic topology
Interconnection box
Interconnection box selection
Cable entrance into equipment
Nameplates and marking
Optical fiber cable component (OFCC)
Interconnection organization
Splice assembly and alignment

Source: https://assist.dla.mil -- Downloaded: 2016-12-10T07:53Z
Check the source to verify that this is the current version before use.

Preparing activity:
NAVY - SH
(Project GDRQ-N129)

Source: https://assist.dla.mil -- Downloaded: 2016-12-10T07:53Z
Check the source to verify that this is the current version before use.

METHOD 2A1

CABLE ENTRANCE TO EQUIPMENT VIA NYLON STUFFING TUBES

1. SCOPE.

1.1 Scope. This method describes a procedure for fiber optic cable entry to fiber optic topology and other equipment through nylon stuffing tubes.

2. REQUIRED EQUIPMENT AND MATERIALS.

2.1 The equipment and materials in table 2A1-I shall be used to perform this procedure:

TABLE 2A1-I. Equipment and materials.

Description	Quantity
Safety glasses	1
Ruler	1
Deburring tool (or equivalent)	1
Paint scraper	1
Emery cloth	As required
Cable jacket stripping tool (AT&T Comcode 105-114-581 or equal)	1
Kevlar shears (Clauss 86 1/2S or equal)	1
Open end wrench (sized to fit locknut)	1
Spanner wrench (sized to fit cap)	1
RTV silicone rubber (Silastic 731731 or equal)	As required
Primer (type to suit metal)	As required
Talc (soap stone)	As required
Alcohol bottle with alcohol/2-propanol or equal (sealable type)	1
Wipes (TEXWIPE TX404T or equal)	As required
Canned air (Fisher Scientific Co. Cat. No. 15-232-20 or equal) (or compressed air)	As required

Source: https://assist.dla.mil -- Downloaded: 2016-12-10T07:53Z
Check the source to verify that this is the current version before use.

3. PROCEDURE.

3.1 Safety summary. The following safety precautions shall be observed:

a. Safety glasses shall be worn at all times when handling bare fibers.

b. Do not touch ends of bare fiber. Wash hands thoroughly after handling bare fibers.

c. Do not look into the end of a fiber until verifying that the fiber is not connected to a laser light source or LED.

3.2 Procedure.

NOTE: Packing assemblies and "O"-rings are not furnished with stuffing tubes. They must be ordered separately by the installing activity to suit installations.

Step 1 - Select stuffing tube, packing and "O"-ring in accordance with tables 2A1-II and 2A1-III.

TABLE 2A1-II. Nylon stuffing tube sizes for fiber optic cable.

Cable type	Cable O.D. inches (mm) (nominal)	Tube size	Packing assembly part no. M19622/	Packing assembly NSN 5330-00-
2-Fiber	0.28 (7)	1	16-004	202-2583
4-Fiber	0.31 (8)	1	16-006	202-2585
8-Fiber	0.43 (11)	2	17-003	202-2588

Source: https://assist.dla.mil -- Downloaded: 2016-12-10T07:53Z
Check the source to verify that this is the current version before use.

TABLE 2A1-III. Nylon stuffing tube data.

Stuffing tube sizes		Tube size 1	Tube size 2
Straight tube	Tube part number M19622/	1-001	1-002
	Tube NSN 5975-00-	296-4092	296-4093
	"O"-ring part number MS28775-	212	214
	"O"-ring NSN 5330-00-	187-3638	196-5382
	Clearance hole inches (mm)	0.89 (23)	1.01 (26)
Angle tube	Tube part number M19622/	2-001	2-002
	Tube NSN 5975-00-	503-4694	503-4693
	"O"-ring part number MS28775-	212	212
	"O"-ring NSN 5330-00-	187-3638	187-3638
	Clearance hole inches (mm)	0.89 (23)	0.89 (23)
NPT Tube	Tube part number M19622/	3-001	3-002
	Tube NSN 5975-00-	806-4063	806-4064
	NPT Tap inches (mm)	1/2 (13)	3/4 (19)
"Y" Tube	Tube part number M19622/	4-01	4-02
	Tube NSN 5975-00-	782-6139	782-6140
	"O"-ring part number MS28775-	212	214
	"O"-ring NSN 5330-00-	187-3638	196-5382
	Clearance hole inches (mm)	0.89 (23)	1.01 (26)

Step 2 - **WARNING:** Wear safety glasses during deburring to avoid possible eye injury.

Inspect hole in enclosure for conformance to clearance hole requirement shown in table 2A1-III and remove any burrs or irregularities using deburring tool.

Source: https://assist.dla.mil -- Downloaded: 2016-12-10T07:53Z
Check the source to verify that this is the current version before use.

Step 3 - For steel enclosures where roughness is greater than 125 microinch finish (not required on aluminum enclosures), remove paint using paint scraper and clean surface with emery paper approximately 0.5 inch (13 mm) wide around hole on exterior of enclosure. Apply one coat of primer, and allow to set. Dust coated surface with talc if primer is not thoroughly dried at time of tube installation. Remove cover and proceed to step 4, 5 or 7 below, as applicable.

Step 4 - With straight tubes, insert stuffing tube body in hole from the inside of enclosure (see figure 2A1-1). If necessary, remove the interior fitting from enclosure. Proceed to step 6 below.

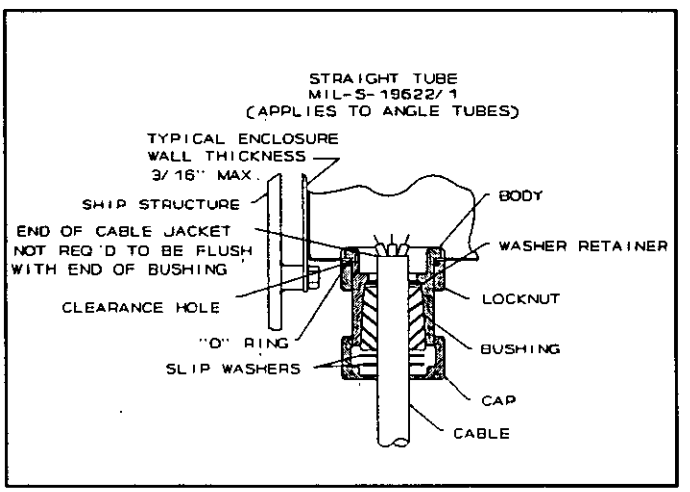

FIGURE 2A1-1. Straight tube.

Source: https://assist.dla.mil -- Downloaded: 2016-12-10T07:53Z
Check the source to verify that this is the current version before use.

Step 5 - With "Y" and angle tubes, insert stuffing tube body in hole from outside of enclosure (see figures 2A1-2 and 2A1-3). Excess length protruding from enclosure may be removed.

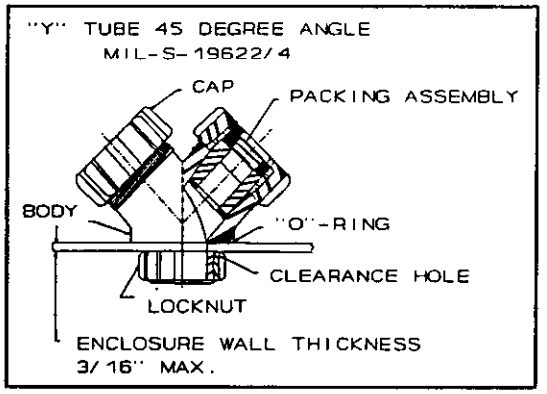

FIGURE 2A1-2. "Y" (45°) tube.

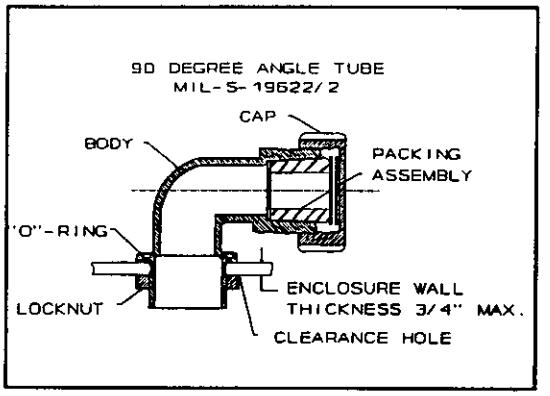

FIGURE 2A1-3. 90° angle tube.

Step 6 - Screw locknut onto body and tighten with wrench against "O"-ring sufficiently to obtain plastic to metal contact of stuffing tube and enclosure. In cases where this plastic to metal contact cannot be obtained, tighten locknut until the threads start to skip. This will be considered a satisfactory indication of tightness. (Note: Hold stuffing tube body while tightening locknut to prevent turning.) Proceed to step 8 below.

Step 7 - With NPT tubes, screw tube into the enclosure pipe thread and tighten sufficiently to obtain a seal at the threads (see figure 2A1-4).

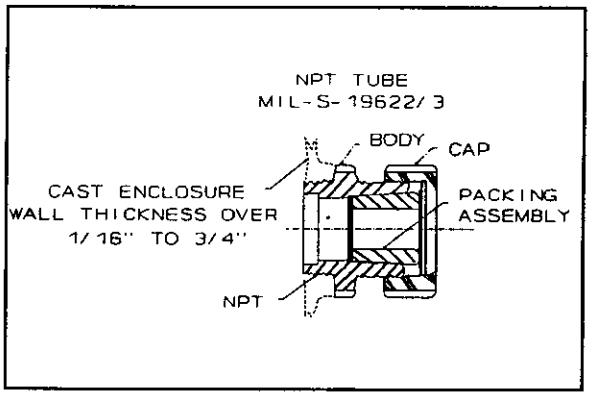

FIGURE 2A1-4. NPT tube.

Step 8 - If not already done, measure distance required to route OFCC from innermost portion of stuffing tube at cable entrance to furthermost connection point in equipment, then add approximately 5 inches (127 mm) and mark cable outer jacket.

Source: https://assist.dla.mil -- Downloaded: 2016-12-10T07:53Z
Check the source to verify that this is the current version before use.

Step 9 - Slide stuffing tube parts onto cable in the order indicated:

a. Cap

b. Two slip washers

c. Rubber bushing

d. Bottom washer

Step 10 - Slide parts up cable beyond mark and, if not already done, remove outer jacket to mark using cable stripper.

CAUTION: Do not cut or nick OFCC's.

Cut off kevlar strength members and exposed central member, if present, using kevlar shears.

Step 11 - Remove waterblocking material and clean OFCC's using wipe dampened with alcohol and blow dry with air.

Step 12 - Insert cable through stuffing tube and into enclosure so that outer jacket protrudes 0.5 inch (13 mm) to 1 inch (25 mm) inside equipment. Slide washers and bushing down cable into tube. (NOTE: When necessary to pass airtight test, apply RTV silicone rubber to bushing.)

Step 13 - Slide cap down cable and screw on tube and tighten sufficiently using spanner wrench to compress bushing to form a tight seal between cable and tube. (NOTE: Hold tube body when tightening cap to prevent breaking watertight seal.) After bushing has been compressed for approximately 24 hours, retighten to ensure seal is maintained.

NOTE: Sealing plugs are for use in service to seal nylon stuffing tubes from which cables have been removed. When installing plugs, cable bushing shall be discarded but nylon washers shall be retained and left in stuffing tube.

Source: https://assist.dla.mil -- Downloaded: 2016-12-10T07:53Z
Check the source to verify that this is the current version before use.

METHOD 2B1

CABLE ENTRANCE TO EQUIPMENT VIA MCP

1. SCOPE.

1.1 Scope. This method describes a procedure for fiber optic cable entry to fiber optic topology and other equipment through multiple cable penetrators (MCP) integral to the equipment being entered.

2. REQUIRED EQUIPMENT AND MATERIALS.

2.1 The equipment and materials in table 2B1-I shall be used to perform this procedure.

TABLE 2B1-I. Equipment and materials.

Description	Quantity
Safety glasses	1
Ruler	1
Tallow (Hevi-Duty/Nelson AA0099 or equal)	As required
Open end wrench 7/16 in.	1

3. PROCEDURE.

3.1 Safety Summary. The following safety precautions shall be observed:

a. Safety glasses shall be worn at all times when handling bare fibers.

b. Do not touch ends of bare fiber. Wash hands thoroughly after handling bare fibers.

c. Do not look into the end of a fiber until verifying that the fiber is not connected to a laser light source or LED.

Source: https://assist.dla.mil -- Downloaded: 2016-12-10T07:53Z
Check the source to verify that this is the current version before use.

3.2 Procedure.

Step 1 - Select MCP blocks in accordance with table 2B1-II.

TABLE 2B1-II. MCP data and insert block sizes for fiber optic cables.

Cable type	2-Fiber	4-Fiber	8-Fiber
Cable O.D. inches (mm) (nominal)	0.28 (7)	0.31 (8)	0.43 (11)
Primary insert block part number M24705/1-BN	1507	1508	2011
Primary insert block NSN 5975-01-	-033-9613	-033-9614	-033-9617
Alternate insert block part number M24705/1-BN	2007	2008	N/A
Alternate insert block NSN 5975-01-	-034-5540	-034-5541	N/A
Blanking insert block part number M24705/1-BN	15	15	20
Blanking insert block NSN 5975-01-	-034-5622	-034-5622	-035-6937
Alternate blanking insert block part number M24705/1-BN	20	20	N/A
Blanking insert block NSN 5975-01-	-035-6937	-035-6937	N/A

Step 2 - **CAUTION:** Do not exceed cable bend radius of four times cable O.D. for dynamic bends and eight times cable O.D. for static bends.

Feed cables into interconnection box or other equipment through cable penetration opening.

Proceed to step 3 if fibers are unterminated.

Source: https://assist.dla.mil -- Downloaded: 2016-12-10T07:53Z
Check the source to verify that this is the current version before use.

Proceed to step 4 if fibers are terminated in connectors or ferrules.

Step 3 - Install connectors and splice ferrules as specified on system drawings using Method 5B1 in Part 5 of this standard for connectors and Method 5C1 in Part 5 of this standard for splice ferrules. Then proceed to step 4 below.

Step 4 - Apply tallow to outside portion of insert blocks, inner portion of MCP frame and to sides of wedgepack. (NOTE: Wedgepack may be removed to apply lube.)

Step 5 - Reinstall wedgepack (if removed) and install insert blocks on cables so that outer jacket protrudes 0.5 inch (13 mm) to 1 inch (25 mm) inside equipment. Fill all voids with blanking (solid) insert blocks (see figure 2B1-1). (NOTE: Generally, incoming cables will be installed on one side of the enclosure and outgoing cables on the opposite side for large enclosures. Where only one wedgepack is used, incoming cables will be on one side of the wedgepack and outgoing cables on the opposite side.)

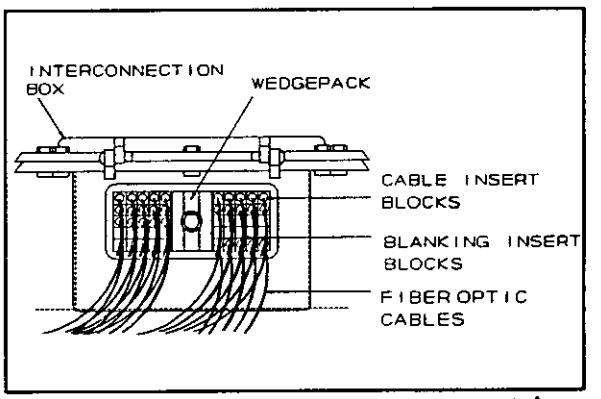

FIGURE 2B1-1. Interconnection box integral MCP-(typical).

Step 6 - Tighten bolt on wedgepack to compress all insert blocks in frame using wrench. After blocks have been compressed for approximately 24 hours, retighten bolt to ensure that seal is maintained.

Source: https://assist.dla.mil -- Downloaded: 2016-12-10T07:53Z
Check the source to verify that this is the current version before use.

METHOD 2C1

CABLE AND BUFFERED FIBER FORMING AND SHAPING

1. SCOPE.

1.1 Scope. This method describes a procedure for the forming and shaping of the optical fiber cable components (OFCC) and buffered fibers within the interconnection box and installation of connectors and splices in patch panels and splice trays, respectively.

2. REQUIRED EQUIPMENT AND MATERIALS.

2.1 The equipment and materials in table 2C1-I shall be used to perform this procedure.

TABLE 2C1-I. Equipment and materials.

Description	Quantity
Safety glasses	1
Ruler	1
Self-clinching straps (MIL-S-23190 or commercial per MS3367)	As required
Lacing (Nylon or equal)	As required
Brackets (MS3339, -40,-41)	As required
Clamps (MS25281)	As required
Synthetic tubing	As required
Heat shrink tubing (MIL-T-23053/5)	As required
Heat gun (Raychem 500B or equal)	1
Open end wrench	1
Alcohol bottle with alcohol/2-propanol or equal (sealable type)	1
Wipes (TEXWIPE TX404T or equal)	As required
Canned air (Fisher Scientific Co. Cat. No. 15-232-20 or equal) (or compressed air)	As required

Source: https://assist.dla.mil -- Downloaded: 2016-12-10T07:53Z
Check the source to verify that this is the current version before use.

3. PROCEDURE.

3.1 Safety summary. The following safety precautions shall be observed:

a. Safety glasses shall be worn at all times when handling bare fibers.

b. Do not touch ends of bare fiber. Wash hands thoroughly after handling bare fibers.

c. Do not look into the end of a fiber until verifying that the fiber is not connected to a laser light source or LED.

3.2 Procedure.

3.2.1 Forming and shaping.

Step 1 - Verify procedures of Method 2B1-2 of this standard have been completed.

Step 2 - Open enclosure cover and visually examine OFCC's for cuts, nicks, kinks or twists before forming into groups.

Step 3 - **CAUTION:** Do not exceed bend radius of four times OFCC O.D. for dynamic bends and eight times OFCC O.D. for static bends.

Observe connection configuration chart or other approved drawing and form fibers into groups based on their final destination. Groups may then be formed into bundles and shaped using lacing or self-clinching straps in accordance with DOD-STD-2003-1, Figures 1B5 and 1B6 respectively. Lace or strap groups loosely; do not tighten down with hand tool.

Source: https://assist.dla.mil -- Downloaded: 2016-12-10T07:53Z
Check the source to verify that this is the current version before use.

Step 4 - Route fiber bundle around the box securing it with mounting brackets or clamps in accordance with Figures 1B5 and 1B6 of DOD-STD-2003-1. Observe following during routing (see figure 2C1-1):

a. Where terminations are close to point of entry and a direct route would exceed OFCC static bend radius of eight times OFCC O.D., an indirect route shall be used.

b. Groups and bundles shall not cross splice trays or patch panels or in any other way obstruct access to individual connectors, splices or adapters.

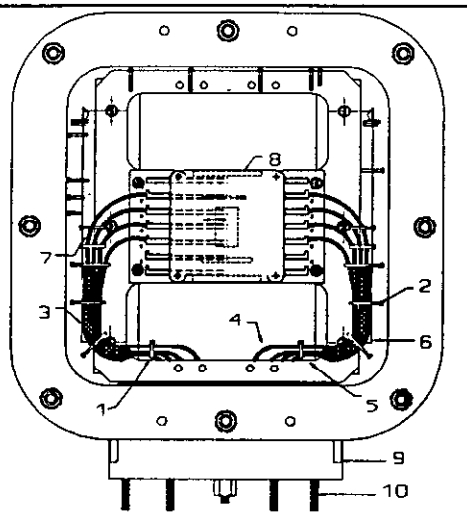

1. SELF-CLINCHING STRAPS TYPE MS3367
2. SUPPORT CLAMPS TYPE MS25281, MS3339, MS3340 OR MS3341
3. INSULATION PROTECTION
4. BRANCH - OFF
5. OFCC GROUP
6. OFCC BUNCH
7. BREAK - OUT
8. SPLICE TRAY HOLDER
9. WEDGE PACK
10. CABLES

FIGURE 2C1-1. Forming and shaping - (typical).

c. Groups and bundles shall be protected from possible damage by sharp edges by use of supporting clamps or brackets or by synthetic tubing at the point of sharp edge.

Step 5 - Break out each separate fiber from the group or bundle and, if not already done, slide heat shrink tubing with fiber identification over connector or splice onto buffered fiber.

Step 6 - **CAUTION:** Do not overheat cable. Prolonged exposure of jacket to temperatures in excess of 320 degrees Fahrenheit (°F) [160 degrees Celsius (°C)] may damage the cable jacket.

Holding heat gun approximately 4 inches (102 mm) away from buffered fiber and tubing, shrink tubing.

Source: https://assist.dla.mil -- Downloaded: 2016-12-10T07:53Z
Check the source to verify that this is the current version before use.

Step 7 - Form unterminated buffered fibers into a generous loop (or loops), being careful not to kink or otherwise damage the fibers, and tie off such that they will not obstruct access to other components.

Step 8 - Proceed to 3.2.2 below to install connectors in patch panels. Proceed to 3.2.3 below to install splices in splice trays.

3.2.2 Connector installation in patch panel.

Step 1 - Unscrew two screws holding patch panel and pull panel forward until it drops in slot. (NOTE: Panel can be completely removed by pulling through slot.)

Step 2 - Insert one connector into adapter mounted in patch panel and lock into place with bayonet fitting.

Step 3 - Insert mating connector into opposite side of adapter and lock in place.

Step 4 - Repeat steps 2 and 3 above until all connectors are installed. Push panel back into box and tighten screws.

Step 5 - Close and secure cover.

3.2.3 Splice installation in splice tray.

Step 1 - Unscrew four screws holding splice tray module cover, pull splice tray forward and remove from box.

Source: https://assist.dla.mil -- Downloaded: 2016-12-10T07:53Z
Check the source to verify that this is the current version before use.

Step 2 - Place ends of splice compression tool into slots on ferrule ends and squeeze tool to compress ferrule springs (see figure 2C1-2).

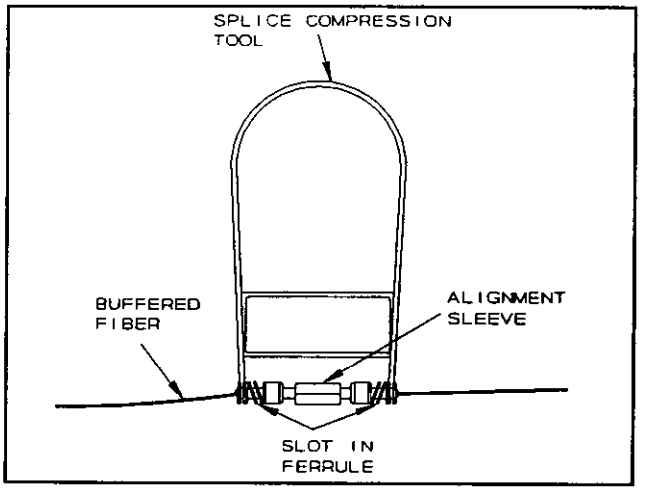

FIGURE 2C1-2. Compressing ferrule springs.

Step 3 - Carefully place splice into splice tray with open slot in splice sleeve facing upward (see figure 2C1-3). Ensure ferrule ends are completely inside tray and that buffered fibers are carefully routed in tray slots.

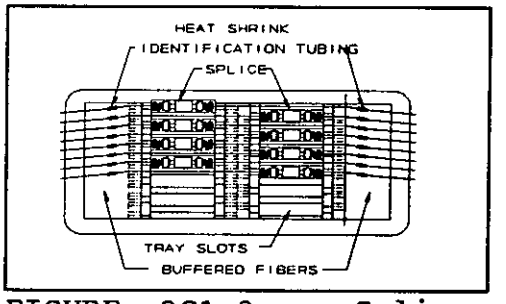

FIGURE 2C1-3. Splices installed in splice tray - (typical).

Step 4 - Repeat steps 2 and 3 above until all splices are installed in tray. Reinstall tray into holder. Repeat above procedures for each tray, as required.

Step 5 - Replace tray module cover and tighten screws.

Step 6 - Perform Cable Assembly Link Loss Test of Method 6C1 in Part 6 of this standard.

Step 7 - Close and secure cover using wrench.

Source: https://assist.dla.mil -- Downloaded: 2016-12-10T07:53Z
Check the source to verify that this is the current version before use.

METHOD 2D1

SPLICE ASSEMBLY AND ALIGNMENT

1. SCOPE.

1.1 Scope. This method describes a procedure for mating and aligning optical fibers terminated with MIL-S-24623/4 splice ferrules to form a continuous optical signal path.

2. REQUIRED EQUIPMENT AND MATERIALS.

2.1 The equipment and materials in table 2D1-I shall be used to perform this procedure.

TABLE 2D1-I. Equipment and materials.

Description	Quantity
Safety glasses	1
Index matching gel (AT&T Comcode 402-698-302 P/N AT 8955 or equal)	As required
Splice alignment clip tool (AT&T Comcode 104-030-523, P/N 994A or equal)	1
Splice alignment tool (AT&T Comcode 104-407-499, P/N 1011B or equal)	1
Test adapters (in accordance with table 6C1-III in Part 6 of this standard)	As required
Test jumpers (in accordance with table 6C1-III in Part 6 of this standard)	As required
Light source (3M Photodyne source driver 9XT, source module 1700-1300T or equal for multimode fiber) or Light source (3M Photodyne source driver 9XT, source module 1720SM1310-T or equal for single mode fiber)	1
Power meter (3M Photodyne detector driver 22XLC, detector module 585 or equal)	1
Alcohol bottle with alcohol/2-propanol or equal (sealable type)	1
Wipes (TEXWIPE TX404T or equal)	As required

Source: https://assist.dla.mil -- Downloaded: 2016-12-10T07:53Z
Check the source to verify that this is the current version before use.

3. PROCEDURE.

3.1 Safety summary. The following safety precautions shall be observed:

a. Safety glasses shall be worn at all times when handling bare fibers.

b. Do not touch ends of bare fiber. Wash hands thoroughly after handling bare fibers.

c. Do not look into the end of a fiber until verifying that the fiber is not connected to a laser light source or LED.

3.2 Procedure.

3.2.1 Splice assembly.

Step 1 - Mix index matching gel according to manufacturer's instructions provided, except do not vacuum.

Step 2 - **CAUTION:** Opening sleeve too much may damage sleeve.

Adjust splice alignment clip tool and insert tool tip into alignment sleeve slot. Open sleeve just enough to insert ferrule tip (see figure 2D1-1).

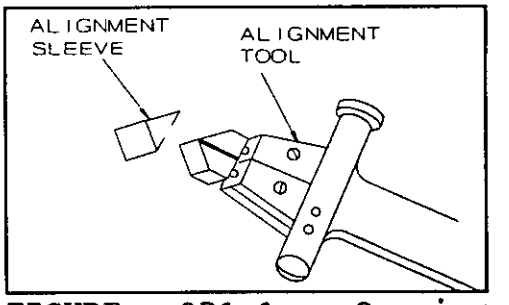

FIGURE 2D1-1. Opening alignment sleeve.

Step 3 - Clean one index matching gel cap with a wipe dampened with alcohol and pour some gel into cap. Dip one polished ferrule tip into gel and slide ferrule into alignment sleeve until tip is approximately centered in sleeve (see figure 2D1-2).

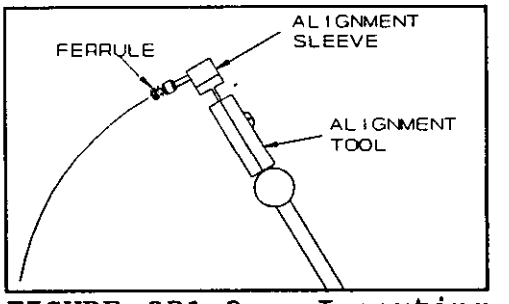

FIGURE 2D1-2. Inserting ferrule into alignment sleeve.

Source: https://assist.dla.mil -- Downloaded: 2016-12-10T07:53Z
Check the source to verify that this is the current version before use.

Step 4 - Dip other ferrule tip into index matching gel and slide ferrule tip into other side of alignment sleeve. Ensure ferrule tips are centered in sleeve and alignment tabs are facing sleeve gap (see figure 2D1-3). Remove tool from alignment sleeve. Verify ferrule tips make contact by pushing both halves together.

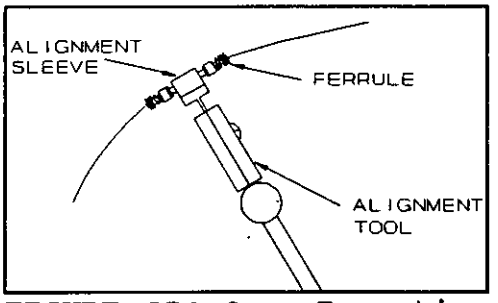

FIGURE 2D1-3. Inserting second ferrule into alignment sleeve.

3.2.2 Splice alignment.

NOTE: Passive alignment should be sufficient for most applications. Active alignment shall only be performed when specified.
Proceed to step 1 below for passive alignment.
Proceed to step 2 below for active alignment.

Step 1 - Passive alignment - verify tab alignment by inserting splice assembly into splice alignment tool making sure tabs fit into tool slots (see figure 2D1-4). If necessary, rotate either ferrule slightly to align tabs. (NOTE: Ferrule springs and collars may be temporarily removed if needed to assist in ferrule rotation). Remove splice from tool.

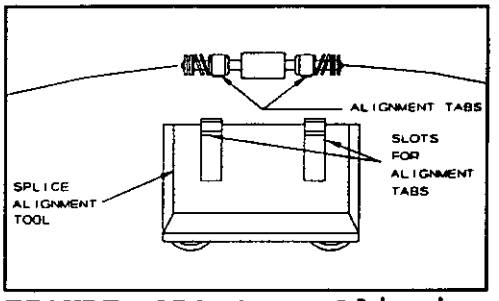

FIGURE 2D1-4. Aligning tabs.

Source: https://assist.dla.mil -- Downloaded: 2016-12-10T07:53Z
Check the source to verify that this is the current version before use.

Step 2 - Active alignment -

WARNING: Do not look into the end of a fiber connected to an LED or laser diode. Light may not be visible but can still damage the eye.

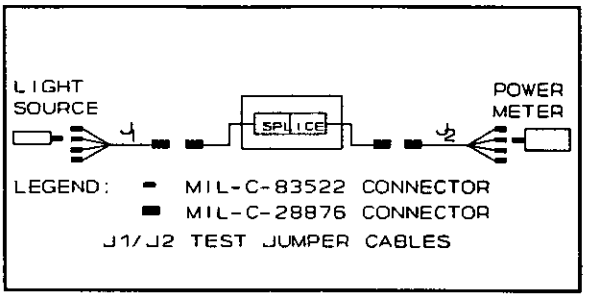

FIGURE 2D1-5. Power Meter Cable hookup- (typical).

Using appropriate test adapters or test jumper cables in accordance with table 6C1-III in Part 6 of this standard, connect ends opposite splice ferrules of cable under test to light source and power meter and energize both (see figure 2D1-5).

Step 3 - Rotate ferrules relative to each other until maximum power is recorded at power meter. Deenergize light source and power meter.

Source: https://assist.dla.mil -- Downloaded: 2016-12-10T07:53Z
Check the source to verify that this is the current version before use.

STANDARDIZATION DOCUMENT IMPROVEMENT PROPOSAL

INSTRUCTIONS

1. The preparing activity must complete blocks 1, 2, 3, and 8. In block 1, both the document number and revision letter should be given.
2. The submitter of this form must complete blocks 4, 5, 6, and 7.
3. The preparing activity must provide a reply within 30 days from receipt of the form.

NOTE: This form may not be used to request copies of documents, nor to request waivers, or clarification of requirements on current contracts. Comments submitted on this form do not constitute or imply authorization to waive any portion of the referenced document(s) or to amend contractual requirements.

I RECOMMEND A CHANGE:

1. DOCUMENT NUMBER MIL-STD-2042-2(SH)

2. DOCUMENT DATE *(YYMMDD)* 930707

3. DOCUMENT TITLE
FIBER OPTIC TOPOLOGY INSTALLATION STANDARD METHOD FOR NAVAL SHIPS

4. NATURE OF CHANGE *(Identify paragraph number and include proposed rewrite, if possible. Attach extra sheets as needed.)*

5. REASON FOR RECOMMENDATION

6. SUBMITTER

a. NAME *(Last, First, Middle Initial)*

b. ORGANIZATION

c. ADDRESS *(Include Zip Code)*

d. TELEPHONE *(Include Area Code)*
(1) Commercial
(2) AUTOVON *(If applicable)*

7. DATE SUBMITTED *(YYMMDD)*

8. PREPARING ACTIVITY

a. NAME TECHNICAL POINT OF CONTACT:
Mr. Charles Courchaine

b. TELEPHONE *(Include Area Code)*
(1) Commercial 703-602-3221
(2) AUTOVON 332-3221

c. ADDRESS *(Include Zip Code)*
Commander, SEA 03Q42
Naval Sea Systems Command
2531 Jefferson Davis Hwy
Arlington, VA 22242-5160

IF YOU DO NOT RECEIVE A REPLY WITHIN 45 DAYS, CONTACT:
Defense Quality and Standardization Office
5203 Leesburg Pike, Suite 1403, Falls Church, VA 22041-3466
Telephone (703) 756-2340 AUTOVON 289-2340

Source: https://assist.dla.mil -- Downloaded: 2016-12-10T07:53Z
Check the source to verify that this is the current version before use.