INCH-POUND

MIL-C-28876D
9 JULY 1992
SUPERSEDING
MIL-C-28876C
18 NOVEMBER 1988

# MILITARY SPECIFICATION

## CONNECTORS, FIBER OPTIC, CIRCULAR, PLUG AND RECEPTACLE STYLE, MULTIPLE REMOVABLE TERMINI, GENERAL SPECIFICATION FOR

This specification is approved for use by all Departments and Agencies of the Department of Defense.

1. SCOPE

1.1 Scope. This specification covers the performance requirements for circular, plug and receptacle style, multiple removable termini, fiber optic connectors that are for Department of Defense applications and that are compatible with multiple transmission element cables. Fiber optic connectors specified herein cover a family of general purpose, interconnection hardware providing a variety of compatible optical coupling arrangements.

1.2 Classification. Plug and receptacle styles, as specified (see 3.1), shall permit straight, wall mounted, jamnut mounted, right angle and other connector configurations as required for cable system applications. Hardware associated with the connector is also specified (see 3.1), including connector backshells and protective covers.

1.2.1 Termini classification. Termini are classified as described in MIL-T-29504.

Note: Termini are not supplied with connectors acquired to this specification. When termini other than those qualified to MIL-T-29504 are used, the requirements stated herein may not be met.

2. APPLICABLE DOCUMENTS

2.1 Government documents.

2.1.1 Specifications, standards, and handbooks. The following specifications, standards, and handbooks form a part of this document to the extent specified herein. Unless otherwise specified, the issues of these documents are those listed in the issue of the Department of Defense Index of Specifications and Standards (DODISS) and supplement thereto, cited in the solicitation (see 6.2).

Beneficial comments (recommendations, additions, deletions) and any pertinent data which may be of use in improving this document should be addressed to: Commander, Naval Sea Systems Command (SEA 55Z3), DOD Standardization Program and Documents Division, Department of the Navy, Washington, DC 20362-5101, by using Standardization Document Improvement Proposal (DD Form 1426) appearing at the end of this document or by letter.

AMSC N/A FSC 6060

DISTRIBUTION STATEMENT A. Approved for public release; distribution is unlimited.

Source: https://assist.dla.mil -- Downloaded: 2016-11-16T10:38Z
Check the source to verify that this is the current version before use.

SPECIFICATIONS

FEDERAL

| | | |
|---|---|---|
| QQ-A-225 | - | Aluminum and Aluminum Alloy Bar, Rod, Wire, Or Special Shapes, Rolled, Drawn, Or Cold Finished, General Specification For. |
| QQ-A-591 | - | Aluminum Alloy Die Castings. |
| QQ-P-35 | - | Passivation Treatments For Corrosion Resisting Steel. |
| QQ-S-763 | - | Steel Bar Wire, Shape And Forging, Corrosion Resisting. |
| QQ-S-766 | - | Steel Stainless and Heat Resisting, Alloys, Plate, Sheet and Strip. |
| TT-I-735 | - | Isopropyl Alcohol |

MILITARY

| | | |
|---|---|---|
| MIL-S-901 | - | Shock Tests, HI (High-Impact) Shipboard Machinery, Equipment, And Systems, Requirements For. |
| MIL-H-5606 | - | Hydraulic Fluid, Petroleum Base, Aircraft, Missile, and Ordnance. |
| MIL-T-5624 | - | Turbine Fuel, Aviation, Grades JP-4 and JP-5 and JP-5/JP-8 St. |
| MIL-L-7808 | - | Lubricating Oil, Aircraft Turbine Engine, Synthetic Base, NATO Code Number O-148. |
| MIL-F-16884 | - | Fuel, Naval Distillate. |
| MIL-L-17331 | - | Lubricating Oil, Steam Turbine and Gear, Moderate Service. |
| MIL-L-23699 | - | Lubricating Oil, Aircraft Turbine Engine, Synthetic Base NATO Code Number O-156. |
| MIL-R-25988 | - | Rubber, Fluorosilicone Elastomer, Oil-and-Fuel Resistant, Sheets, Strips, Molded Parts, And Extruded Shapes. |
| MIL-T-29504 | - | Termini, Fiber Optic Connector, Removable, General Specification For. |
| MIL-F-49291 | - | Fiber, Optical, (Metric). |
| MIL-C-55330 | - | Connectors, Electrical and Fiber Optic, Packaging of. |
| MIL-C-85045 | - | Cable, Fiber Optics, (Metric), General Specification For. |

(See supplement 1 for list of associated specifications.)

STANDARDS

MILITARY

| | | |
|---|---|---|
| MIL-STD-105 | - | Sampling Procedures and Tables For Inspection By Attributes. |
| MIL-STD-202 | - | Test Methods for Electronic And Electrical Component Parts. |
| MIL-STD-454 | - | Standard General Requirements For Electronic Equipment. |
| MIL-STD-810 | - | Environmental Test methods and Engineering Guidelines. |
| MIL-STD-889 | - | Dissimilar Metals. |
| MIL-STD-1285 | - | Marking of Electrical And Electronic Parts. |
| MIL-STD-1344 | - | Test Methods For Electrical Connectors. |
| MIL-STD-1373 | - | Screw Thread, Modified, 60 Degree Stub, Double. |
| DOD-STD-1678 | - | Fiber Optics Test Methods And Instrumentation. |
| MIL-STD-2163 | - | Insert Arrangements For MIL-C-28876, Connectors, Fiber Optic, Circular, Plug and Receptacle Style, Multiple Removable Termini. |
| MIL-STD-45662 | - | Calibration Systems Requirements. |

(Unless otherwise indicated, copies of federal and military specifications, standards, and handbooks are available from the Standardization Documents Order Desk, Building 4D, 700 Robbins Avenue, Philadelphia, PA 19111-5094.)

2.2 Non-Government publications. The following documents form a part of this document to the extent specified herein. Unless otherwise specified, the issues of the documents which are DOD adopted are those listed in the issue of the DODISS cited in the solicitation. Unless otherwise specified, the issues of the documents not listed in the DODISS are the issues of the documents cited in the solicitation (see 6.2).



Source: https://assist.dla.mil -- Downloaded: 2016-11-16T10:38Z
Check the source to verify that this is the current version before use.

ELECTRONIC INDUSTRIES ASSOCIATION (EIA)

| | | | | |
|---|---|---|---|---|
| | EIA-RS-359 | | - | EIA Standard Colors for Color Identification and Coding. |
| | EIA-455-6 | FOTP-6 | - | Cable Retention Test Procedure for Fiber Optic Cable Interconnecting Devices. |
| + | EIA-455-13 | FOTP-13 | - | Visual and Mechanical Inspection of Fibers, Cables, Connectors and/or Other Fiber Optic Devices. |
| + | EIA-455-20 | FOTP-20 | - | Measurement of Change in Optical Transmittance. |
| + | EIA-455-21 | FOTP-21 | - | Mating Durability of Fiber Optic Interconnecting Devices. |
| + | EIA-455-22 | FOTP-22 | - | Ambient Light Susceptibility of Fiber Optic Components. |
| + | EIA-455-32 | FOTP-32 | - | Fiber Optic Circuit Discontinuities. |
| + | EIA-455-34 | FOTP-34 | - | Interconnection Device Insertion Loss Test. |
| + | EIA-455-36 | FOTP-36 | - | Twist Test for Fiber Optic Connecting Devices. |
| + | EIA-455-42 | FOTP-42 | - | Optical Crosstalk in Fiber Optic Components. |
| | EIA-455-49 | FOTP-49 | - | Procedure for Measuring Gamma Irradiation Effects in Optical Fiber and Optical Cables. |
| + | EIA-455-107 | FOTP-107 | - | Return Loss for Fiber Optic Components. |

+ Denotes adopted EIA documents.

(Application for copies should be addressed to the Electronic Industries Association, Engineering Department, 2001 Eye Street, NW, Washington, DC 20006.)

2.3 Order of precedence. In the event of a conflict between the text of this document and the references cited herein (except for related associated detail specifications, specification sheets, or MS standards), the text of this document takes precedence. Nothing in this document, however, shall supersede applicable laws and regulations unless a specific exemption has been obtained.

3. REQUIREMENTS

3.1 Specification sheets. The individual connector requirements shall be as specified herein and in accordance with the applicable specification sheets. In the event of any conflict between the requirements of this specification and the specification sheet, the latter shall govern.

3.2 Qualification. Fiber optic connectors and accessories furnished under this specification shall be products which are authorized by the qualifying activity for listing on the applicable qualified products list at the time set of award of contract (see 4.4 and 6.3).

3.3 Materials. The connectors, backshells, covers, or other protective accessory hardware shall be constructed of:

a. Aluminum alloy in accordance with QQ-A-225, or QQ-A-591.

b. Stainless steel in accordance with QQ-S-763, class 316.

c. Stainless steel in accordance with QQ-S-763, class 302 through class 304.

d. Stainless steel in accordance with QQ-S-766, class 302.

e. Fluorosilicone in accordance with MIL-R-25988, type 1, class 1, grade 60.

f. Fluorosilicone in accordance with MIL-R-25988, type 1, class 1, grade 70.

3.3.1 General. The connectors shall be constructed of materials as specified (see 3.1). Materials selected for use in connectors shall be of a type and quality to ensure compliance with the requirements of this specification, and shall be physically and chemically compatible for their intended lifetime, which shall not be less than 20 years. They shall be of the lightest practical material suitable for the intended purpose and shall not interfere with or degrade the fiber optic termination process, contact cleaning operation or optical junction transmission. All materials used shall be nonmagnetic and nonnutrient to fungus (see requirement 4 of MIL-STD-454.) Materials may be dielectric or electrically conductive as applicable. Where new and questionable materials is being considered for use, the manufacturer shall furnish the toxicological data and formulations required to evaluate the safety of the material for the proposed use.



Source: https://assist.dla.mil -- Downloaded: 2016-11-16T10:38Z
Check the source to verify that this is the current version before use.

3.3.2 Finish. The resultant finish on all connectors, backshells, covers, or other protective accessory hardware shall be as follows:

a. Aluminum components: Cadmium plate, olive drab over electroless nickel for external parts. Gray anodize or cadmium plate olive drab over electroless nickel for internal parts.

b. Stainless steel components, passivate in accordance with QQ-P-35.

3.3.3 Recovered materials. Unless otherwise specified herein, all material incorporated in the products covered by this specification shall be new. Products shall be fabricated using raw materials produced from recovered bulk materials to the extent practicable if the intended use of the product is not jeopardized. The term "recovered materials" means materials which have been collected or recovered from solid waste and reprocessed to become part of a source of raw materials, as opposed to virgin raw materials. None of the above shall be interpreted to mean that the use of partially processed, assembled, used or rebuilt products are allowed under this specification.

3.3.4 Nonmetallic materials. Nonmetallic materials used in the construction of connectors shall not be degraded under the specified environmental conditions.

3.3.5 Solvents, adhesives and cleaning agents. No incompatibility shall exist between the materials employed in the fiber to terminus securing or polishing processes, such that degradation of these materials shall result from in-service use or when tested in accordance with the requirements of the temperature life test of 3.12.10.

3.3.5.1 Recommended solvents, adhesives, and cleaning agents. The connector manufacturer shall pack with each connector, a list of the solvents, adhesives, and cleaning agents, as applicable, recommended for use with the connector.

3.3.5.2 Recommended cleaning procedure. The connector manufacturer shall pack the recommended terminus cleaning procedure with each connector.

3.3.6 Toxic and hazardous products and formulations. Materials used in the connectors, backshells, or dust covers shall not give off toxic or explosive fumes when exposed to flame. Materials used shall have no adverse effect on the health of personnel when used for its intended purpose. Questions pertinent to this effect shall be referred by the contracting activity to the appropriate departmental medical service who will act as an advisor to the contracting agency.

3.3.7 Metals. Unless otherwise specified (see 3.1), all exposed corrosion resistant steel parts of the connector assembly shall have a passivated finish which permits the attainment of a surface finish condition compatible with external coatings of platings of the type and color specified herein.

3.3.8 Dissimilar metals. Intimate contact between dissimilar metals shall be avoided, where possible, in connectors designed to this specification. Should contacting dissimilar metals be employed in a connector, suitable protection against electrolytic corrosion shall be provided as specified in MIL-STD-889.

3.3.9 Seals. Seals shall provide environmental isolation for the optical contact junctions and connector interior parts. Grommets, O-rings, interfacial seals, boots, gaskets, or other sealing devices, as needed by the connector design, shall accomplish their intended purpose and meet all test requirements as specified herein.

3.3.10 Sealing compounds. Sealing compounds shall not flow at the maximum specified storage temperature or exhibit cracking at the minimum specified storage temperature.



Source: https://assist.dla.mil -- Downloaded: 2016-11-16T10:38Z
Check the source to verify that this is the current version before use.

3.3.11 Lubricants. When specified (see 3.1), lubricants used in the construction of the connectors shall satisfy the following criteria:

a. Lubricants shall be permanent and shall not require replacement during the lifetime of the connector.

b. Lubricants shall not migrate to the optical interfaces resulting in the degradation of optical performance.

c. Lubricants shall be useful over the environmental conditions specified herein.

d. Lubricants shall not be affected by cleaning solvents.

3.4 Design and construction. Connectors, backshells, and dust covers shall conform to figures 4 through 11, and as specified (see 3.1).

3.4.1 General. Connectors, backshells, and dust covers shall be designed to be compatible with optical fibers and cables as specified in MIL-F-49291 and MIL-C-85045, respectively.

3.4.2.1 Optical junction sealing. Optical junctions shall be sealed against moisture and contamination as specified herein.

3.4.2.2 Cable sealing. Connectors shall seal the terminating cables to meet the environmental requirements specified herein.

3.4.3 Interchangeability and intermateability. Connector material and hardware shall be as specified (see 3.1), to insure interchangeability and intermateability.

3.4.3.1 Interchangeability. All connectors, backshells, accessories, and replaceable parts having the same military Part or Identifying Number (PIN) shall be physically and functionally interchangeable without need for modification of such items or of the mating equipment.

3.4.3.2 Intermateability. All connectors having the same termini, insert arrangement, and shell size shall be intermateable with their counterpart connectors.

3.5 Connectors (receptacles and plugs).

3.5.1 Shells. The connector shells shall retain the connector insert.

3.5.1.1 Receptacles. Receptacles shall be of the wall (panel) mount, jamnut, or cable (straight) types as specified (see 3.1).

3.5.1.2 Engagement of connectors. Counterpart connectors of any arrangement and accessories shall be capable of being fully engaged and disengaged without the use of tools.

3.5.1.3 Coupling mechanism. Coupling rings of the connectors shall be knurled, and designed so that plug and receptacle optical termini shall approach or recede from each other as the coupling mechanism is respectively tightened by clockwise rotation or loosened in the counterclockwise direction as viewed from rear of plug connector. The coupling mechanism shall be captive on the plug to mate with the receptacle shell. Coupling ring and coupling screw threads shall be in accordance with MIL-STD-1373 as shown on figures 7 and 8, and as specified (see 3.1). If the coupling threads must be lubricated to meet the requirements contained herein, the lubricant shall be applied only during manufacture. The lubricant selected shall not be reapplied nor migrate into the optical junction region during use.

3.5.1.4 Shell and backshell polarization (keying). The polarization of the mating plug and receptacle shall be accomplished by integral keys on plug and receptacle shells. Keys shall be designed to prevent physical contact of the mating optical termini or of the termini with the insert surface of the counterpart connector until the keyways are properly aligned for engagement and the coupling mechanisms are engaged. Backshell splines, keys, and keyways shall be polarized and mated prior to coupling.

3.5.2 Termini. All termini requirements shall be in accordance with MIL-T-29504 (see 3.1).



Source: https://assist.dla.mil -- Downloaded: 2016-11-16T10:38Z
Check the source to verify that this is the current version before use.

3.5.3 Inserts. Inserts shall be keyed and secured to prevent rotation within the connector shell. Inserts shall be of one piece construction and shall be such that they will not crack, chip, or break in normal service or assembly. Inserts glued or bonded together shall not be used. The insert dimensions shall be as specified (see 3.1). The insert hole configuration shall conform to the dimensions shown on figure 1.

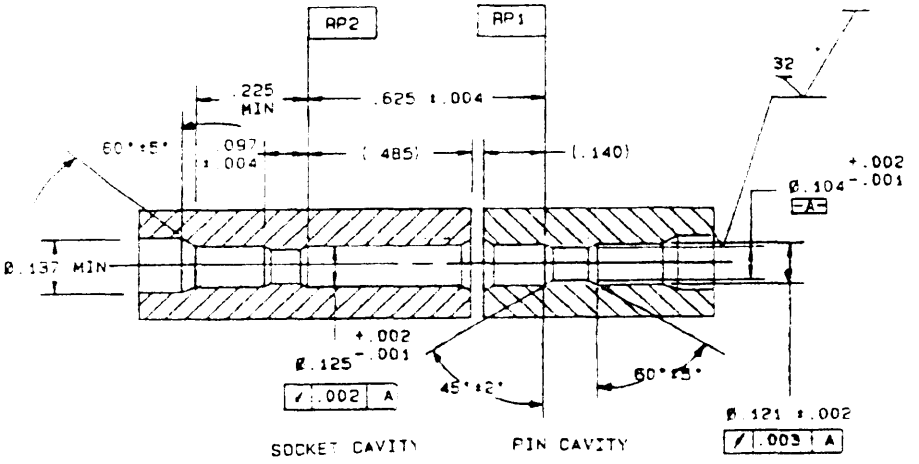


| Inches | mm | Inches | mm |
|---|---|---|---|
| .001 | 0.03 | .137 | 3.48 |
| .002 | 0.05 | .140 | 3.56 |
| .003 | 0.08 | .225 | 5.72 |
| .004 | 0.10 | .342 | 8.69 |
| .010 | 0.25 | .378 | 9.60 |
| .097 | 2.46 | .423 | 10.74 |
| .104 | 2.64 | .428 | 10.87 |
| .121 | 3.07 | .485 | 12.32 |
| .125 | 3.18 | .625 | 15.88 |

NOTES:
1. Mating cavities to be aligned ⌖ Ø.010 Ⓢ.
2. It is recommended that termini be protected from damage during use by way of connector shrouds or pin protectors. Dimensions (.485) and (.140) are typical for some inserts. For other design applications the following dimensions should be used as a reference:
   M28876/1 and /12 pin termini protrude .342 from R.P.1
   M28876/14 ceramic tip pin termini protrude .378 from R.P.1
   M28876/2 and /13 socket termini with alignment sleeve protrude .428 from R.P.2
   M28876/15 ceramic tip socket termini with alignment sleeve protrude .423 from R.P.2

FIGURE 1. Termini cavity dimensions.

3.5.3.1 Number of termini, arrangement, and spacing. The insert pattern, that is, the number of termini, their arrangement and spacing shall be as specified in MIL-STD-2163. Every terminus position shall accept either optical or dummy termini. Termini spacing shall permit adequate terminus marking identification and easy terminus insertion and removal.

3.5.3.2 Terminus insertion and removal methods. Optical terminus insertion shall be accomplished by inserting the terminus and the terminus insertion tool into the rear of the connector and by locking the terminus in place. Optical terminus removal shall be accomplished by inserting the terminus removal tool into the front of the connector and by forcing the terminus out the rear of the connector. The individual termini shall be positively retained in the connector when installed with the terminus insertion tool and shall be capable of being removed without terminus or insert damage when using the terminus removal tool. Requirements for these tools shall be as specified (see 3.1).



Source: https://assist.dla.mil -- Downloaded: 2016-11-16T10:38Z
Check the source to verify that this is the current version before use.

3.6 Backshells. Backshells shall conform to the requirements as specified (see 3.1). The backshells shall be provided with or without cable strain relief as specified (see 3.1). The backshells shall be free of any sharp edges or other configurations that could cause damage to optical fibers extending through them.

3.7 Protective caps. All optical connectors (plugs and receptacles) shall be provided with a throwaway protective cap or cover. The cover shall be free of mold release, lubricants, or any other contaminants.

3.8 Dust covers. Dust covers shall conform to the requirements as specified (see 3.1). The dust covers shall be free of any sharp edges or any other configurations that could cause damage to the optical termini.

3.9 Tools. Tools used to terminate connectors onto cables shall be as specified (see 3.1). The connector manufacturer shall provide the tools when specified in the acquisition documents (see 6.2).

3.10 Visual and mechanical.

3.10.1 Size. When examined in accordance with 4.6.1, the dimensions and dimensional tolerances for these connectors, backshells, and accessories shall be as specified (see 3.1).

3.10.2 Weight. When tested in accordance with 4.6.2, the weight of the connectors, backshells, and accessories shall be as specified (see 3.1).

3.10.3 Identification marking. Marking characters shall be a minimum of 0.040 inch in height. The connector shall also be marked with a yellow band in accordance with EIA-RS-359, or the phrase "FIBER OPTICS" as specified (see 3.1). When tested in accordance with 4.6.3, the connectors, backshells, and dust covers shall be marked as specified in 3.10.3.1, 3.10.3.2, or as specified (see 3.1). All marking characters in any face of the connectors, backshells, or dust covers shall be identifiable.

3.10.3.1 Connectors, backshells, and dust covers. The connectors, backshells, and dust covers shall be identified by a legible and permanent marking applied in accordance with MIL-STD-1285.

3.10.3.2 Inserts. Marking shall correspond between mating inserts and shall be as specified in MIL-STD-2163. Raised or depressed characters shall not be used on mating faces. Terminus locations shall be designated by identifiable characters on the front and rear faces of the insert or the insert assembly. Character position and arrangement shall assure appropriate terminus cavity identification.

3.10.3.3 PIN. The PIN to be used for connectors acquired to this specification are created as follows: Example: M28876/01-A1P1MN

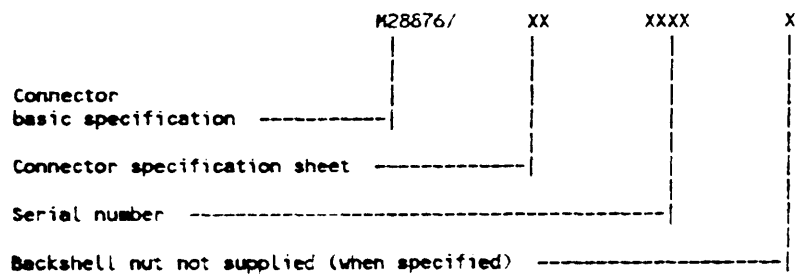




Source: https://assist.dla.mil -- Downloaded: 2016-11-16T10:38Z
Check the source to verify that this is the current version before use.

not less than 1 inch. When its motor is turned on, the arm shall

3.10.4 Workmanship. All details of workmanship shall be in accordance with the high grade fiber optic connector manufacturing practice when examined in accordance with 4.6.4. Connectors and accessories shall be dimensionally uniform and free of manufacturing flaws that would degrade performance, inhibit proper connection to interfacing elements, and otherwise yield an inferior product. The following shall be a minimal level of visual examination to be performed and is not intended to restrict other pertinent workmanship examinations:

a. Loose contacts, inserts, or other connector parts which adversely effect the environmental sealing, permit cable sealant penetration or degrade optical contact alignment shall not be permitted.

b. Peeling or chipping of plating or finish, galling of mating parts indicating excessive wear, nicks, burrs, or other substandard connector surface blemishes shall not be permitted.

3.10.5 Maintainability. The connectors shall require no preventive maintenance.

3.10.6 Alignment mechanism. The alignment mechanism shall be a precision ferrule and sleeve, as specified (see 3.1).

3.10.7 Fiber attachment. Fiber attachment shall be provided by adhesive bonding.

3.10.8 OFCC attachment. OFCC attachment shall be provided by crimping or adhesive bonding or both.

3.11 Optical performance. The optical performance requirements of 3.11.1 through 3.11.5 shall be used to monitor effects of the inspection requirements specified in 3.12 and 3.13 as required by 4.4.2 and 4.5.3.

3.11.1 Insertion loss. The initial and maximum insertion loss per channel shall not be greater than the values specified in table I (see 4.7.1.1).

TABLE I. Insertion loss.

| Fiber type (MIL-F-49291) | Terminus (MIL-T-29504) | Fiber style | Initial loss (dB) | Maximum loss (dB) |
|---|---|---|---|---|
| /3 | /1 or /12 | 50/125 | N/A | 2.0 |
| /3 | /2 or /13 | 50/125 | N/A | 2.0 |
| /4 | /1 or /12 | 100/140 | N/A | 1.5 |
| /4 | /2 or /13 | 100/140 | N/A | 1.5 |
| /6 | /14 | 62.5/125 | 1.0 | 1.5 |
| /6 | /15 | 62.5/125 | 1.0 | 1.5 |
| /7 | /14 | SM | 1.0 | 1.5 |
| /7 | /15 | SM | 1.0 | 1.5 |

3.11.2 Discontinuities. When measured in accordance with 4.7.1.2, no discontinuity shall occur. A discontinuity is considered to be a reduction of strength of 0.5 dB or more for a duration of 50 microseconds or longer.

3.11.3 Crosstalk. When devices with 3 or more channels are tested in accordance with 4.7.1.3, the signal power levels, or sum of levels of the passive channel or channels, shall be below the signal level of the active channel by at least 60 dB.

3.11.4 Change in optical transmittance. When tested in accordance with 4.7.1.4, the change in optical transmittance shall be less than 0.5 dB.

3.11.5 Return loss (for single mode connectors only). When tested in accordance with 4.7.1.5, the return loss shall be less than -30 dB.

3.12 Physical requirements.



Source: https://assist.dla.mil -- Downloaded: 2016-11-16T10:38Z
Check the source to verify that this is the current version before use.

3.12.1 Screw threads. When tested in accordance with 4.8.1, slight out-of-roundness beyond the tolerances specified is acceptable if the threads can be checked without forcing the thread gauges. Screw threads may be relieved provided the relief does not interfere with proper performance of the screw threads.

3.12.2 Terminus insertion and removal forces. Connectors shall be tested in accordance with 4.8.2. The terminus insertion force and the force required to remove unlocked termini shall not exceed 22.0 pounds.

3.12.3 Terminus retention force. When tested in accordance with 4.8.3 and subjected to axial loads of 22.0 pounds termini shall be retained in their inserts and axial displacements of the termini shall not exceed 0.015 inch (0.38 mm).

3.12.4 Insert retention axial strength. When tested in accordance with 4.8.4, connector inserts shall withstand an applied minimum pressure of 100 pounds per square inch in both the forward direction and the backward direction for a minimum period of 1 minute without cracking, breaking, or being dislocated from their normal positions in the connector shell. No axial displacement detrimental to performance shall be observed between the inserts and their shell body during or after the test exposure.

3.12.5 Insert retention radial strength. When tested in accordance with 4.8.5, connector inserts shall withstand the clockwise and counterclockwise radial torque specified in table II for a minimum period of 1 minute. No rotational displacement detrimental to performance shall be observed between the inserts and their shell body during or after the test exposure.

TABLE II. Insert retention radial strength.

| Connector shell size | Maximum radial torque (inch-pounds) |
|---|---|
| 11 | 15 |
| 13 | 20 |
| 15 | 25 |
| 23 | 30 |

3.12.6 Cable retention. When tested in accordance with 4.8.6, the minimum cable to connector pullout strength shall be 162 pounds. There shall be no evidence of cable jacket damage, cable clamp failure, cable to connector seal damage, distortion or bending of metallic connector parts, or cable disengagement from the clamp. The connector shall meet the requirements of 3.11.4 during and after the test.

3.12.7 External bending moment. When tested in accordance with 4.8.7, connectors shall exhibit no visible evidence of damage that may degrade their ability to perform as specified (see 3.1).

3.12.8 Coupling engagement and disengagement torque. When tested in accordance with 4.8.8, the maximum coupling ring and coupling screw engagement and disengagement torques shall be as specified in table III.

TABLE III. Coupling engagement and disengagement torques.

| Connector shell size | Coupling engagement and disengagement torque (inch-pounds) |
|---|---|
| 11 | 13 |
| 13 | 15 |
| 15 | 17 |
| 23 | 19 |



Source: https://assist.dla.mil -- Downloaded: 2016-11-16T10:38Z
Check the source to verify that this is the current version before use.

3.12.9 Environmental properties. The connectors shall meet all requirements specified (see 3.1), during the specified operating environments and after the specified storage environments. The operating temperature range and storage temperature range shall be as shown in table IV, and as specified (see 3.1).

TABLE IV. Temperature ranges.

| Range | Operating extremes (°C) | Storage extremes (°C) |
|---|---|---|
| 1 | -54 to +65 | -62 to +71 |
| 2 | -28 to +65 | -62 to +71 |

3.12.10 Temperature life. When tested in accordance with 4.8.9, connectors subjected to these specified accelerated aging exposures shall not exhibit visual evidence of dimensional change, opening of seals, cracking or crazing of components or finishes, identification marking impairment, fusion or seizure of mating parts, leakage of waterproofing compounds or other effects detrimental to connector operation. No evidence of adhesive degradation shall be present. The connector shall meet the requirements of 3.11.1 and 3.11.4 after the test.

3.12.11 Maintenance aging. Connectors with removable termini shall be tested in accordance with 4.8.10. Connectors shall show no visible evidence of wear or deformation which may degrade their ability to perform as specified. The terminus insertion and removal forces requirement of 22.0 pounds (see 3.11.2) shall be met.

3.12.12 Twist. When tested in accordance with 4.8.11, connector seals shall not be rendered inoperable nor shall any other connector damage occur. The change in optical transmittance attributable to the connector shall be less than 0.5 dB during and after the test.

3.12.13 Cable seal flexing. When tested in accordance with 4.8.12, connector strain relief mechanisms shall prevent loss of environmental sealing or other damage which may impair the connector operation.

3.12.14 Mating durability. When tested in accordance with 4.8.13 mating connectors shall show no evidence of mechanical defects detrimental to connector operation. The connector shall meet the requirements of 3.11.4 after the test.

3.12.15 Backshell and dust cover attachment. When tested in accordance with 4.8.14, no evidence of excessive thread binding, seal pinching, or any contamination buildup shall be observed.

3.12.16 Crush. When tested in accordance with 4.8.15, connectors shall show no evidence of inability to mate or unmate, broken parts, loss of optical continuity, or damage to shells, backshells, or dust covers. The requirements of 3.11.4 shall be met during and after the test.

3.12.17 Thermal shock. When tested in accordance with 4.8.16, connectors shall show no evidence of mechanical damage, loosening of component parts, separation of bonded surfaces, or other damage detrimental to the operation of the connector. The connector shall meet the requirements of 3.11.4 after the test.

3.13 Environmental requirements.

3.13.1 Fluid immersion. When tested in accordance with 4.9.1, visual examination of the test connector shall reveal no swelling or softening of material, no loss of sealing capability or identification marking and no discoloration or other effects detrimental to the intended use of these connectors. The requirements of 3.11.4 shall be met after the test.

3.13.2 Temperature cycling. When tested in accordance with 4.9.2, a post test visual examination of the test connectors shall reveal no evidence of connector part dimensional change, no leakage of waterproofing compounds or other apparent loss of sealing capability, no surface or identification marking impairment, no coupling-thread binding or other evidence of mating or unmating incapability, and no other damage detrimental to the operation of the connector. The requirements of 3.11.4 shall be met during and after the test.



Source: https://assist.dla.mil -- Downloaded: 2016-11-16T10:38Z
Check the source to verify that this is the current version before use.

3.13.3 Shock. When tested in accordance with 4.9.3, connectors shall not be damaged and there shall be no loosening of parts. The requirements of 3.11.2 shall be met during the test and 3.11.4 shall be met after the test.

3.13.4 Vibration. When tested in accordance with 4.9.4, connectors shall not exhibit visual evidence of loosening of parts, relative motion between parts or other damage which can produce physical distortion or wear and may result in fatigue of the mechanical parts or failure of the connector operation. The requirements of 3.11.2 shall be met during the test and 3.11.4 shall be met after the test.

3.13.5 Ozone exposure. When tested in accordance with 4.9.5, seals shall show no evidence of excessive swelling or embrittlement which may degrade environmental isolation.

3.13.6 Water pressure. When tested in accordance with 4.9.6, visual inspection of the test connector shall reveal no penetration of water into the sealed region of the mated connector. The requirements of 3.11.4 shall be met after the test.

3.13.7 Impact. When tested in accordance with 4.9.7, connectors shall not be visibly damaged or otherwise rendered unfit for operational use. The requirements of 3.11.4 shall be met after the test.

3.13.8 Temperature humidity cycling. When tested in accordance with 4.9.8, connector parts shall not swell or otherwise degrade such that connector performance is impaired. The requirements of 3.11.4 shall be met during and after the test.

3.13.9 Salt spray (corrosion). When tested in accordance with 4.9.9, no visible evidence of salt penetration into the connector sealed area shall be observed. No corrosive effects shall be seen on the external connector parts which would be detrimental to the operation of the connector.

3.13.10 Sand and dust. When tested in accordance with 4.9.10, the connectors shall show no evidence of physical damage which will adversely affect the operation of the connector and shall have insertion losses and coupling torques within the requirements of 3.11.4 during and after the test, and 3.12.8 after the test.

3.13.11 Terminus cleaning. After cleaning the terminus in accordance with 4.9.11, the marking requirements of 3.10.3 and the change in optical transmittance of 3.11.4 shall be met after the test.

3.13.12 Flammability. When tested in accordance with 4.9.12, the mated cable-connector assembly shall meet the optical requirements of 3.11.4. The unmated connector assembly shall not exceed a combined flame and afterglow extinguishing time of 30 seconds (condition C) after removal of the applied flame. There shall be no dripping which will cause the flammable material to ignite and there shall be no violent burning or explosive type fire.

3.13.13 Freezing water. When tested in accordance with 4.9.13, connectors shall not be physically damaged. The connectors shall meet the optical requirements specified in 3.11.4 during and after the test.

3.13.14 Nuclear radiation resistance (connectors with lensed termini only). When tested in accordance with 4.9.14, the connectors shall meet the optical requirements specified in 3.11.4 during and after the test.

3.13.15 Fungus resistance (polymeric materials only). Polymeric connector materials shall meet the requirements of MIL-STD-454, requirement 4 for fungus inert materials. When tested in accordance with 4.9.15, polymeric connector materials that are not in accordance with MIL-STD-454, requirement 4 for fungus inert materials shall meet grade 1 classification of MIL-STD-810, method 508. If certification to MIL-STD-454 cannot be made, polymeric samples from two additional connectors shall be submitted for testing.



Source: https://assist.dla.mil -- Downloaded: 2016-11-16T10:38Z
Check the source to verify that this is the current version before use.

## 4. QUALITY ASSURANCE PROVISIONS

4.1 Responsibility for inspection. Unless otherwise specified in the contract or purchase order, the contractor is responsible for the performance of all inspection requirements as specified herein. Except as otherwise specified in the contract or purchase order, the contractor may use his own or any other facilities suitable for the performance of the inspection requirements specified herein, unless disapproved by the Government. The Government reserves the right to perform any of the inspections set forth in the specification where such inspections are deemed necessary to assure supplies and services conform to prescribed requirements.

4.1.1 Responsibility for compliance. All items must meet all requirements of sections 3 and 5. The inspections set forth in this specification shall become a part of the contractor's overall inspection system or quality program. The absence of any inspection requirements in the specification shall not relieve the contractor of the responsibility of assuring that all products or supplies submitted to the Government for acceptance comply with all requirements of the contract. Sampling in quality conformance does not authorize submission of known defective material, either indicated or actual, nor does it commit the Government to acceptance of defective material.

4.1.2 Test equipment and inspection facilities. Provisions for test and measuring equipment and inspection facilities of sufficient accuracy, quality and quantity to permit performance of the required inspections shall be the responsibility of the contractor. The establishment and maintenance of a calibration system to control the accuracy of the measuring and test equipment shall be in accordance with MIL-STD-45662 and as specified herein.

4.1.3 Assembly plants. Assembly plants must be listed on, or approved for listing on, the applicable qualified products list. The qualified connector manufacturer shall certify that the assembly plant is approved for the distribution of the manufacturers parts. The assembly plant shall use only piece parts supplied by the qualified connector manufacturer. No testing other than visual examination is required of certified piece parts obtained from the qualified connector manufacturer, except when there is cause for rejection. All assemblies produced at the assembly plant shall be subjected to examination of the product to assure that the assembly process conforms with that established at the qualified manufacturing plant. Quality control requirements, including Government inspection surveillance, shall be the same as required for the qualified connector manufacturer.

4.2 Inspections.

4.2.1 Classification of inspections. The inspections specified herein are classified as follows:

a. Materials inspection (see 4.3).

b. Qualification inspection (see 4.4).

c. Quality conformance inspection (see 4.5).

4.2.2 Toxicological data and formulation. The contractor shall have the toxicological product formulations and associated information available for review by the contracting activity to evaluate the safety of the material for the proposed use.

4.2.3 Inspection conditions. Unless otherwise specified, all inspections shall be performed in accordance with the test conditions specified in DOD-STD-1678.

4.3 Materials inspection. Materials inspection shall consist of certification supported by verifying data that materials used in fabricating the delivered fiber optic connectors are in accordance with the requirements of 3.3 and as specified (see 3.1).

4.4 Qualification inspection. Qualification inspection shall be performed at a laboratory acceptable to the Government (see 6.3) on sample units produced with equipment and procedures normally used in production. This inspection shall consist of performing the inspections and optical tests specified in table V, in the sequence shown therein, on the qualification test samples specified in 4.4.1.



Source: https://assist.dla.mil -- Downloaded: 2016-11-16T10:38Z
Check the source to verify that this is the current version before use.

4.4.1 Test samples. Fiber optic connector, backshell, and dust cover samples complying with the specified requirements (see 3.1) shall be submitted for qualification. The manufacturer shall provide a counterpart connector for each connector subjected to qualifying tests requiring mating assemblies. The counterpart connectors provided for this purpose shall be new, previously qualified connectors or new connectors submitted for qualification testing. Manufacturers not producing mating connectors shall submit data substantiating that tests were performed with qualified counterpart connectors. For those tests specifying the use of mated connectors, optical and mechanical test assessments shall be made using the assigned counterpart connector for those test measurements as required.

4.4.1.1 Sample size. Six mating pairs shall be submitted for qualification testing. These connectors shall consist of MIL-C-28876/2 wall-mounted receptacles with straight strain reliefs and MIL-C-28876/7 plugs with straight strain reliefs or MIL-C-28876/1 wall-mounted receptacles with MIL-C-28876/27 backshells and MIL-C-28876/6 plugs with MIL-C-28876/27 backshells as specified (see 3.1).

4.4.1.2 Sample preparation. Unless otherwise specified, connectors shall be fully assembled into cable-connector assemblies using the types of cable specified in the applicable connector specification sheet (see 3.1). Connector terminals shall be optically finished with termini properly seated within their inserts. For mated connectors, full sealing capability shall be provided as specified. Connectors shall be provided with backshell, strain relief cable clamp, and attached to an appropriate length of the specified cable type.

4.4.2 Inspection routine. Connector, backshell, and accessory samples shall be tested in accordance with the sequence of table V. Optical tests shall be made as specified in table V. The connector group samples may be tested simultaneously.

TABLE V. Qualification inspection.

| Inspection tests | Part applicability | | | Requirement paragraph | Test method |
|---|---|---|---|---|---|
| | Connector | Backshell | Dust covers | | |
| Group I (all mated pairs) | | | | | |
| Size | x | x | x | 3.10.1 | 4.6.1 |
| Weight | x | x | x | 3.10.2 | 4.6.2 |
| Identification marking | x | x | x | 3.10.3 | 4.6.3 |
| Workmanship | x | x | x | 3.10.4 | 4.6.4 |
| Screw threads | x | x | x | 3.12.1 | 4.8.1 |
| Insertion loss | x | | | 3.11.1 | 4.7.1.1 |
| Return loss | x | | | 3.11.5 | 4.7.1.5 |
| Crosstalk | x | | | 3.11.3 | 4.7.1.3 |
| Group II (2 mated pairs) | | | | | |
| Terminus insertion and removal forces | x | | | 3.12.2 | 4.8.2 |
| Terminus retention force | x | | | 3.12.3 | 4.8.3 |
| Insert retention axial strength | x | | | 3.12.4 | 4.8.4 |
| Insert retention radial strength | x | | | 3.12.5 | 4.8.5 |
| Temperature life | x | x | | 3.12.10 | 4.8.9 |
| Maintenance aging | x | | | 3.12.11 | 4.8.10 |
| Fluid immersion | x | x | | 3.13.1 | 4.9.1 |
| Temperature humidity cycling | x | x | | 3.13.8 | 4.9.8 |

See footnote at end of table.



Source: https://assist.dla.mil -- Downloaded: 2016-11-16T10:38Z
Check the source to verify that this is the current version before use.

TABLE V. Qualification inspection - Continued.

| Inspection tests | Part applicability | | | Requirement paragraph | Test method |
|---|---|---|---|---|---|
| | Connector | Backshell | Dust covers | | |
| Group III (2 mated pairs) | | | | | |
| Cable retention | x | x | | 3.12.6 | 4.8.6 |
| External bending moment | x | x | | 3.12.7 | 4.8.7 |
| Coupling engagement and disengagement torque | x | | | 3.12.8 | 4.8.8 |
| Twist | x | x | | 3.12.12 | 4.8.11 |
| Cable seal flexing | x | x | | 3.12.13 | 4.8.12 |
| Mating durability | x | | | 3.12.14 | 4.8.13 |
| Backshell and dust cover attachment | x | x | x | 3.12.15 | 4.8.14 |
| Temperature cycling | x | x | | 3.13.2 | 4.9.2 |
| Vibration | x | | | 3.13.4 | 4.9.4 |
| Shock | x | | | 3.13.3 | 4.9.3 |
| Ozone exposure | x | | | 3.13.5 | 4.9.5 |
| Water pressure | x | x | | 3.13.6 | 4.9.6 |
| Nuclear radiation resistance | x | | | 3.13.14 | 4.9.14 |
| Insertion loss | x | x | | 3.11.1 | 4.7.1.1 |
| Group IV (2 mated pairs) | | | | | |
| Salt spray | x | x | x | 3.13.9 | 4.9.9 |
| Impact | x | x | x | 3.13.7 | 4.9.7 |
| Crush | x | x | | 3.12.16 | 4.8.15 |
| Thermal shock | x | x | | 3.12.17 | 4.8.16 |
| Freezing water | x | x | | 3.13.13 | 4.9.13 |
| Sand and dust | x | x | x | 3.13.10 | 4.9.10 |
| Terminus cleaning | x | | | 3.13.11 | 4.9.11 |
| Insertion loss | x | x | | 3.11.1 | 4.9.1 |
| Flammability | x | x | | 3.13.12 | 4.9.12 |
| Group V (1 mated pair) 1/ | | | | | |
| Fungus resistance | x | x | x | 3.13.15 | 4.9.15 |

1/ Polymeric parts from 1 mated pair.

4.4.3 Qualification rejection. Qualification approval will not be granted if any of the connectors, backshells, or accessories being tested according to table V fail to meet the requirements of 3.3, 3.4, 3.10, 3.11, 3.12, and 3.13.



Source: https://assist.dla.mil -- Downloaded: 2016-11-16T10:38Z
Check the source to verify that this is the current version before use.

4.4.4 Retention of qualification. To retain qualification, the contractor shall forward a report at 12- and 36-month intervals to the qualifying activity. The qualifying activity shall establish the initial reporting date. The report shall consist of:

a. A summary of the results of the tests performed for inspection of product for delivery (groups A and B), indicating, as a minimum, the number of lots that have passed, the number that have failed, and the group which they failed. The results of tests of all reworked lots shall be identified and accounted for. Summary shall be submitted at 12-month intervals.

b. A summary of the results of tests performed for periodic inspection (group C), including the number and mode of failures. The summary shall include results of all periodic inspection tests performed and completed during the 36-month period. If the summary of the test results indicates nonconformance with specification requirements, and corrective action acceptable to the qualifying activity has not been taken, action may be taken to remove the failing product from the qualified products list.

4.4.4.1 Failure to submit a report. Failure to submit the report within 60 days after the end of each 12- or 36-month period may result in loss of qualification for the product. In addition to the periodic submission of inspection data, the contractor shall immediately notify the qualifying activity at any time during the 12- or 36-month period that the inspection data indicates failure of the qualified product to meet the requirements of this specification.

4.4.4.2 No production. In the event that no production occurred during the reporting period, a report shall be submitted certifying that the company still has the capabilities and facilities necessary to produce the item. If during two consecutive reporting periods, there has been no production, the manufacturer may be required, at the discretion of the qualifying activity, to submit the qualified product to testing in accordance with the qualification inspection requirements.

4.4.4.3 Sample selection. Retention of qualification for all shell sizes may be granted after completion of testing for one shell size as determined by the qualifying activity.

4.4.5 Qualification of additional connectors. Qualification of wall-mounted receptacles shall qualify cable-connecting and jamnut mounted receptacles. Each shell size shall be qualified separately. Qualification of one backshell shall qualify all backshells of the same shell size. Qualification of a singlemode part shall qualify both singlemode and multimode parts. For test purposes, both singlemode and multimode termini may be combined in the test samples.

4.5 Quality conformance inspection. Quality conformance inspection shall consist of the inspections and optical tests specified for group A inspection (table VI), group B inspection (table VII), group C inspection (table VIII), and packaging inspection.

4.5.1 Inspection of product for delivery. Inspection of product for delivery shall consist of group A inspection.

4.5.1.1 Inspection lot. The inspection lot shall consist of the number of connectors offered for inspection at one time, and all of the same design as covered by one specification sheet.

4.5.1.1.1 Sample unit. A sample unit shall be selected at random from the inspection lot. For quality conformance inspections a sample unit shall consist of an individual unit of supply.

4.5.1.1.2 Sample size. The sample size shall consist of that number of sample units required by the inspection lot size, as determined by the sampling plans in MIL-STD-105.

4.5.1.2 Group A inspection. Group A inspection shall consist of the inspection tests specified in table VI. All connectors, backshells, and dust covers of the inspection sample shall be subjected to the inspection tests listed.

4.5.1.2.1 Sample plan. Statistical sampling and inspection shall be in accordance with MIL-STD-105 for general inspection level II. There shall be no major defects. The AQL shall be less than 4 percent for minor defects. Major and minor defects shall be as defined in MIL-STD-105.



Source: https://assist.dla.mil -- Downloaded: 2016-11-16T10:38Z
Check the source to verify that this is the current version before use.

4.5.1.2.2 Rejected lots. If an inspection lot is rejected, the supplier may rework it to correct the defects, or screen out the defective units (if possible), and resubmit them for inspection. Resubmitted lots shall be inspected using tightened inspection in accordance with MIL-STD-105. Such lots shall be separate from new lots, and shall be clearly identified as reinspected lots.

4.5.1.2.3 Disposition of sample units. Sample units that have failed any of the group A inspection tests may be reworked to correct defects if possible and subjected to group A inspection again. Sample units that pass all tests of group A inspection may be delivered on the purchase order or contract or tested to group B inspection (see 4.5.2). Units that have not been corrected shall not be delivered on any order and shall not be used for group B inspection even though the inspection lot submitted is accepted.

4.5.2 Group B inspection. Group B inspection shall consist of the tests specified in table VII in the order shown. Group B inspection shall be performed on sample units selected from inspection lots which have passed group A inspection. Group B inspection samples shall be representative of production.

4.5.2.1 Sampling plan. Every 12 months, connector sample units which have passed group A inspection shall be selected to provide sample units for group B inspection.

4.5.2.2 Failures. If one or more sample units fail to pass group B inspection, the sample shall be considered to have failed.

4.5.2.3 Disposition of sample units. Sample units which have been subjected to group B inspection may be delivered on the contract or purchase order.

4.5.2.4 Noncompliance. If a sample fails to pass group B inspections, the manufacturer shall notify the qualifying activity and the cognizant inspection activity of such failure and take corrective action on the materials or processes, or both, as warranted. Acceptance and shipment of the product shall be discontinued until corrective action, acceptable to the Government, has been taken. After the corrective action has been taken, group B inspection shall be repeated on additional sample units (all tests and examinations, or the test which the original sample failed, at the option of the Government). Group A inspection may be reinstituted; however, final acceptance and shipment shall be withheld until the group B inspection has shown that the corrective action was successful. In the event of failure after reinspection, information concerning the failure and corrective action taken shall be furnished to the cognizant inspection activity and the qualifying activity.

TABLE VI. Group A inspection.

| Inspection Tests | Part applicability | | | Requirement paragraph | Test method |
|---|---|---|---|---|---|
| | Connector | Backshell | Dust covers | | |
| Size 1/ | x | x | x | 3.10.1 | 4.6.1 |
| Weight 1/ | x | x | x | 3.10.2 | 4.6.2 |
| Identification marking | x | x | x | 3.10.3 | 4.6.3 |
| Workmanship | x | x | x | 3.10.4 | 4.6.4 |
| Screw threads 1/ | x | x | x | 3.12.1 | 4.8.1 |
| Backshell and dust cover attachment | x | x | x | 3.12.15 | 4.8.14 |

1/ In process inspections may be used to verify conformance to these requirements.



Source: https://assist.dla.mil -- Downloaded: 2016-11-16T10:38Z
Check the source to verify that this is the current version before use.

TABLE VII. Group B inspection.

| Inspection tests | Part applicability | | | Requirement paragraph | Test method |
|---|---|---|---|---|---|
| | Connector | Backshell | Dust covers | | |
| Insertion loss | x | | | 3.11.1 | 4.7.1.1 |
| Coupling engagement and disengagement torque | x | | | 3.12.8 | 4.8.8 |
| Terminus retention force | x | | | 3.12.3 | 4.8.3 |
| Insert retention axial strength | x | | | 3.12.4 | 4.8.4 |
| Insert retention radial strength | x | | | 3.12.5 | 4.8.5 |

TABLE VIII. Group C inspection.

| Inspection tests | Part applicability | | | Requirement paragraph | Test method |
|---|---|---|---|---|---|
| | Connector | Backshell | Dust covers | | |
| Group I (All mated pairs) | | | | | |
| Insertion loss | x | | | 3.11.1 | 4.7.1.1 |
| Return loss | x | | | 3.11.5 | 4.7.1.5 |
| Group II (2 mated pairs) | | | | | |
| Terminus insertion and removal forces | x | | | 3.12.2 | 4.8.2 |
| Temperature life | x | x | | 3.12.10 | 4.8.9 |
| Maintenance aging | x | | | 3.12.11 | 4.8.10 |
| Temperature humidity cycling | x | x | | 3.13.8 | 4.9.8 |
| Group III (2 mated pairs) | | | | | |
| Cable retention | x | x | | 3.12.6 | 4.8.6 |
| External bending moment | x | x | | 3.12.7 | 4.8.7 |
| Twist | x | x | | 3.12.12 | 4.8.11 |
| Cable seal flexing | x | x | | 3.12.13 | 4.8.12 |
| Mating durability | x | | | 3.12.14 | 4.8.13 |
| Temperature cycling | x | x | | 3.13.2 | 4.9.2 |
| Shock | x | | | 3.13.3 | 4.9.3 |
| Water pressure | x | x | | 3.13.6 | 4.9.6 |
| Insertion loss | x | x | | 3.11.1 | 4.7.1.1 |
| Group IV (2 mated pairs) | | | | | |
| Salt spray | x | x | x | 3.13.9 | |
| Impact | x | x | x | 3.13.7 | |
| Crush | x | x | | 3.12.16 | |
| Thermal shock | x | x | | 3.12.17 | |
| Terminus cleaning | x | | | 3.13.11 | |
| Insertion loss | x | | | 3.11.1 | |



Source: https://assist.dla.mil -- Downloaded: 2016-11-16T10:38Z
Check the source to verify that this is the current version before use.

4.5.3 Periodic inspection. Periodic inspection shall consist of group C. Except where the results of these inspections show noncompliance with the applicable requirements (see 4.5.3.1.5), delivery of products which have passed groups A and B inspections shall not be delayed pending the results of periodic inspection.

4.5.3.1 Group C inspection. Group C inspection shall consist of the inspections specified in table VIII, in the order shown. Group C inspection shall be made on sample units selected from inspection lots which have passed groups A and B inspections. All sample units shall be selected from current production.

4.5.3.1.1 Sample unit preparation. Connectors shall be fully assembled into cable-connector assemblies using the types of cable specified in the applicable connector specification sheet (see 3.1). Connector terminals shall be optically finished with termini properly seated within their inserts. For mated connectors, full sealing capability shall be provided as specified (see 3.1). Connectors shall be provided with backshell, strain relief cable clamp, and attached to an appropriate length of the specified cable type, and shall be terminated in accordance with the manufacturer's instructions.

4.5.3.1.2 Sampling plan. Group C inspection shall be performed on connectors of the same PIN with their mating connectors 36 months after initial qualification and within each 3 year period thereafter. All mating pairs shall be subjected to group I tests. Mated pairs from the group I tests shall be divided among the groups II, III, and IV tests.

4.5.3.1.3 Failures. If one or more sample units fail to pass group C inspection, the sample shall be considered to have failed.

4.5.3.1.4 Disposition of sample units. Sample units which have been subjected to group C inspection shall not be delivered on the contract or order.

4.5.3.1.5 Noncompliance. If a sample fails to pass group C inspections, the manufacturer shall notify the qualifying activity and the cognizant inspection activity of such failure and take corrective action on the materials or processes, or both, as warranted. Acceptance and shipment of the product shall be discontinued until corrective action, acceptable to the Government, has been taken. After the corrective action has been taken, group C inspection shall be repeated on additional sample units (all tests and examinations, or the test which the original sample failed, at the option of the Government). Groups A and B inspection may be reinstituted; however, final acceptance and shipment shall be withheld until the group C inspection has shown that the corrective action was successful. In the event of failure after reinspection, information concerning the failure and corrective action taken shall be furnished to the cognizant inspection activity and the qualifying activity.

4.5.4 Inspection of packaging. The sampling and inspection of the preservation, packing, and container marking shall be in accordance with the requirements of MIL-C-55330.

4.6 Visual and mechanical inspection (see 3.10). The requirements for visual inspection shall be in accordance with EIA-455-13.

4.6.1 Size (see 3.10.1). Each of the dimensions specified (see 3.1) for the connectors, backshells, and accessory parts shall be measured using calibrated measuring devices with the precision and accuracy appropriate for the tolerances specified (see 3.1). Dimensions shall be in accordance with the applicable specification sheets.

4.6.2 Weight (see 3.10.2). The connectors, backshells, and accessories shall be weighed using calibrated scales, having the range, precision, and accuracy appropriate for the tolerances specified (see 3.1).

4.6.3 Identification marking. Identification marking on connectors, backshells, and accessory parts shall be visually examined and measured for conformance with the requirements of 3.10.3.

4.6.4 Workmanship inspection. The connectors, backshells, and accessories shall be visually examined to verify that they meet the workmanship requirements of 3.10.4.



Source: https://assist.dla.mil -- Downloaded: 2016-11-16T10:38Z
Check the source to verify that this is the current version before use.

4.7 Optical conformance test methods. The use of optical test methods to assess the influence of test exposures on performance of connectors requires that they be connected to lengths of fiber. Unless otherwise specified (see 3.1), the optical properties inspections shall be performed at a wavelength of 1.300 ±0.020 µm. The connectors should be attached to lengths of cable of the type specified in MIL-C-85045. The cable lengths shall be less than 30 meters. The optical fiber components exposed at the test set (source, detector, or coupler) may be connectorized for access to the test set. For multimode fibers, the source used shall be noncoherent. Light launch conditions shall be in accordance with table IX. Any optical power detection method may be used if the method is sufficiently sensitive to measure the differential optical power levels as specified, and if the method provides repeatable readings (less than 3 percent variation).

TABLE IX. Light launch conditions.

| Fiber type | Launch conditions |
|---|---|
| Single mode | 30 mm diameter mandrel |
| Multimode | Overfill (Insertion loss only) or 70/70 restricted or equivalent (see 6.4.7 and 6.4.10) |

4.7.1 Equivalent test methods. The use of equivalent test methods is allowed subject to the following conditions:

a. The allowance of an equivalent method is specified in this specification.

b. The manufacturer has conducted both test methods during qualification testing and has submitted complete test data to the preparing activity.

c. The preparing activity has approved the use of that method by that manufacturer.

4.7.1.1 Insertion loss (see 3.11.1). The connector shall be initially tested in accordance with method C of EIA-455-34 using both 70/70 and overfill launch conditions. For subsequent maximum insertion loss tests, 70/70 launch conditions or equivalent shall be used. The light source shall be continuous wave or modulated as appropriate. Fiber/cable lengths, $L_1$ and $L_2$, shall be measured and recorded in the test data sheet.

4.7.1.2 Discontinuities (see 3.11.2). The connector shall be tested in accordance with EIA-455-32. The optical termini of the connector shall be connected through short optical test cables to an appropriate optical signal source and detector. Unused termini shall be capped. The source shall produce a constant level static signal easily detected by the detector. The output of the detector shall be monitored for discontinuities while the connector is subjected to a physical test. For tests of extended duration, discontinuity measurements may be made at discrete times during the test as approved by the qualifying activity.

4.7.1.3 Crosstalk (see 3.11.3). The crosstalk shall be measured in accordance with EIA-455-42).

4.7.1.4 Change in optical transmittance (see 3.11.4). The change in optical transmittance shall be measured in accordance with EIA-455-20 or by an equivalent method (see 4.7.1). The periodicity of the measurements shall be sufficient for the environmental test performed as approved by the qualifying activity.

4.7.1.5 Return loss (see 3.11.5). The return loss shall be measured in accordance with EIA-455-107 or by an equivalent method (see 4.7.1).

4.8 Physical inspections.

4.8.1 Screw threads (see 3.12.1). Screw threads shall be checked after protective coating by means of ring and plug gauges in accordance with MIL-STD-1373.



Source: https://assist.dla.mil -- Downloaded: 2016-11-16T10:38Z
Check the source to verify that this is the current version before use.

4.8.2 Terminus insertion and removal forces (see 3.12.2). Unmated connector samples shall be tested in accordance with method 2012 of MIL-STD-1344. Cable clamping shall be relaxed and the connector backshell removed for the performance of these tests.

4.8.3 Terminus retention force (see 3.12.3). Unmated connector samples shall be tested in accordance with method 2007 of MIL-STD-1344. Termini shall be subjected to axial compressive loads applied to the front face of the optical terminal tending to push the terminus to the rear of the shell body. Care must be exercised in the design of the terminus plunger mechanism to not physically touch the terminal optical region. Axial loads shall be applied up to the maximum load specified herein.

4.8.4 Insert retention axial strength (see 3.12.4). Unmated connector samples shall be tested in accordance with method 2010 of MIL-STD-1344. Termini positions within the insert shall be fully filled. Pressure shall be applied up to a minimum of 100 pounds psi and the axial displacement measured. The same pressure shall then be applied in the opposite direction and the displacement measured.

4.8.5 Insert retention radial strength (see 3.12.5). Unmated connector samples shall be tested, where specified (see 3.1), for radial strength as described herein. Counterpart test devices for plugs and receptacles shall be supplied by the connector manufacturer which are capable of applying radial torque forces between the insert and its shell body. Outermost termini positions or other means may be used for application of these torques, however, no damage shall occur to the insert as a result of the test exposure. Torque loading shall be applied up to the maximum specified (see 3.1) in each rotational direction.

4.8.6 Cable retention (see 3.12.6). Mated connector samples shall be tested in accordance with EIA-455-6. The axial tensile load shall be applied up to the load specified and shall be maintained for 10 minutes. The change in optical transmittance shall be measured during and after the test (see 4.7.1.4).

4.8.7 External bending moment (see 3.12.7). Cable-connector assemblies shall be tested in accordance with the following procedures. The cabled receptacle shall be mounted as in normal service to a rigid panel. Before mating the cabled plug to the receptacle, a bending moment test arm shall be secured to the rear of the plug shell. The fixture shall be of any convenient design for application of the load except it must not provide support for the connector shell in front of the engaged threads (see figure 2). After mating the plug and receptacle, the bending moment load of 300 inch-pounds as measured from the panel shall be applied. The load (P) shall be applied across the smallest exterior dimension (H) of the connector (see figure 1). The load shall be applied at a rate of approximately 10 inch-pounds per second until the required load is applied. The maximum load shall be held for 1 minute.

4.8.8 Coupling engagement and disengagement torque (see 3.12.8). Mateable connectors or accessories shall be tested for radial engagement and disengagement torques in accordance with method 2013 of MIL-STD-1344.

4.8.9 Temperature life (see 3.12.10). Mated cable-connector assemblies shall be tested in accordance method 108 of MIL-STD-202. The exposure time shall be 240 hours. The exposure temperature shall be 110°C. Measurements shall be made after the test.

4.8.10 Maintenance aging (see 3.12.11). Unmated connectors shall be tested in accordance with method 2002 of MIL-STD-1344. The termini selected for insertion and removal shall be the same termini to be used subsequently for optical testing. The force required to insert and remove each terminus in and from the connector shall be measured during the first and final maintenance aging cycle.

4.8.11 Twist (see 3.12.12). Mated cable-connector assemblies shall be tested in accordance with EIA-RS-455-36. The connector-held fixture shall be rotated 360° at a rate of one cycle per 5 seconds for a total of 50 cycles. One cycle shall consist of a 360° twist ±180° about the neutral axis. The cable assemblies shall be stretched with minimum tension of 11.0 pounds to their maximum lengths and clamped at a distance of about 100 times the cable diameter from the connector to the table top. Measurements shall be made before and after the test. The change in optical transmittance shall be measured during and after the test (see 4.7.1.4).

4.8.12 Cable seal flexing (see 3.12.13). Unmated cable-connector assemblies, or each type to be qualified shall be tested in accordance with method 2017 of MIL-STD-1344.



Source: https://assist.dla.mil -- Downloaded: 2016-11-16T10:38Z
Check the source to verify that this is the current version before use.

4.8.13 Mating durability (see 3.12.14). Connectors shall be tested in accordance with EIA-455-21. Five hundred complete (part separating) cycles (mate and unmate) shall be accomplished by hand at the rate of 1 cycle per 15 seconds. The change in optical transmittance shall be measured after the test (see 4.7.1.4).

4.8.14 Backshell and dust cover attachment (see 3.12.15). Connector backshells and dust covers shall be manually mated and unmated five times to their counterpart connectors.

4.8.15 Crush (see 3.12.16). Mated and unmated cable-connector assemblies shall be tested in accordance with method 2008 of MIL-STD-1344. The test load shall be 1250 Newtons, and the number of loads shall be 7. The change in optical transmittance shall be measured during and after the test (see 4.7.1.4).

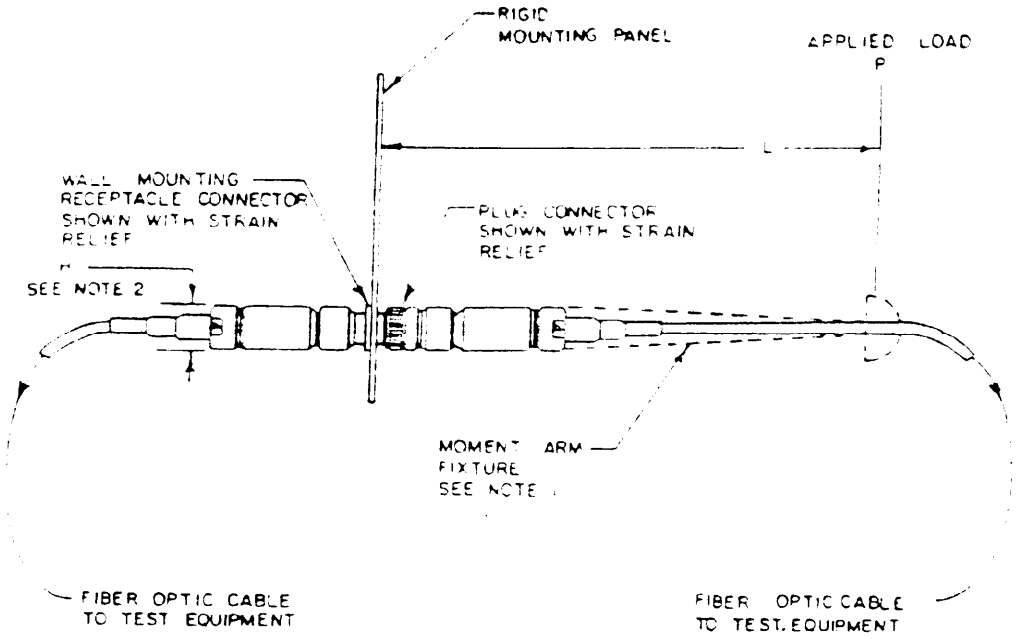


NOTES:
1. Moment arm fixture shall be of a convenient design.
2. Dimension "H" is the smallest exterior dimension of connector.

FIGURE 2. External bending moment test fixture and connector setup.



Source: https://assist.dla.mil -- Downloaded: 2016-11-16T10:38Z
Check the source to verify that this is the current version before use.

4.8.16 Thermal shock (see 3.12.17). Connectors shall be tested in accordance with method 1003 of MIL-STD-1344. The temperature extremes shall be the storage temperature extremes (see table IV). The number of cycles shall be 10. The change in optical transmittance shall be measured after the test (see 4.7.1.4).

4.9 Environmental tests.

4.9.1 Fluid immersion (see 3.13.1). At least one mated cable-connector assembly shall be tested in accordance with method 1016 of MIL-STD-1344. Assemblies shall be immersed in each of the fluids listed in table X at the temperature specified for 24 hours. Each assembly shall be completely dried after each immersion. After testing, the assemblies shall be examined for fluid penetration into the shell body and connector junction region. The change in optical transmittance shall be measured after the test (see 4.7.1.4).

TABLE X. Fluids and test temperatures for cable jacket material immersion.

| Fluid | Applicable specification | Test temperature (°C) |
|---|---|---|
| Fuel oil | MIL-F-16884 | 33 to 37 |
| Turbine fuel, JP-4 | MIL-T-5624 | 20 to 25 |
| Isopropyl alcohol | TT-I-735 | 20 to 25 |
| Hydraulic fluid | MIL-H-5606 | 48 to 50 |
| Lubricating oil | MIL-L-17331<br>MIL-L-23699 | 73 to 77<br>73 to 77 |
| Coolant, Monsanto Coolanol or equivalent | | 20 to 25 |

4.9.2 Temperature cycling (see 3.13.2). Cable-connector assemblies (at least one mated and one unmated) shall be tested in accordance with method 4010 of DOD-STD-1678. The mated and unmated cable-connector assemblies shall be examined for degradation of any sort after testing. Cleaning of the optical termini of the unmated connector assembly in accordance with 3.13.11 prior to optical testing shall be permissible. The change in optical transmittance shall be measured during and after the test (see 4.7.1.4). The following is a list of test steps, test temperatures and test times:

TABLE XI. Temperature cycling test steps.

| Step | Temperature (°C) | Duration (hours) |
|---|---|---|
| 1 | Room ambient | 24 |
| 2 | Ramp to low operating temperature | 2 |
| 3 | Low operating temperature | 8 |
| 4 | Ramp to 25°C ±2°C | 2 |
| 5 | 25°C ±2°C | 6 |
| 6 | Ramp to high operating temperature | 1 |



Source: https://assist.dla.mil -- Downloaded: 2016-11-16T10:38Z
Check the source to verify that this is the current version before use.

TABLE XI. Temperature cycling test steps - Continued.

| Step | Temperature (°C) | Duration (hours) |
|---|---|---|
| 7 | High operating temperature | 6 |
| 8 | Ramp to 25°C ±2°C | 1 |
| 9 | 25°C ±2°C | 6 |
| 10 | Repeat steps 2 through 9 nine more times for a total of ten cycles | |

4.9.3 Shock (see 3.13.3). Mated cable-connector assemblies shall be tested in accordance with MIL-S-901, grade A. Optical discontinuities shall be measured during the test (see 4.7.1.2). The change in optical transmittance shall be measured after the test (see 4.7.1.4).

4.9.4 Vibration (see 3.13.4). Mated cable-connector assemblies shall be tested in accordance with test condition II and test condition VI (test condition letter C) of method 2005 of MIL-STD-1344. The test duration for test condition VI shall be 30 minutes for each axis. Optical discontinuities shall be measured during each test (see 4.7.1.2). The change in optical transmittance shall be measured after the test (see 4.7.1.4).

4.9.5 Ozone exposure (see 3.13.5). Mated cable-connector assemblies shall be tested in accordance with method 1007 of MIL-STD-1344. After test exposure, the assemblies shall be examined for damage.

4.9.6 Water pressure (see 3.13.6). Mated cable-connector assemblies shall be tested for water pressure susceptibility as follows: The assemblies shall be immersed in water to an equivalent depth of 32 feet for a period of 48 hours. The water temperature shall be maintained between 10°C and 35°C during the exposure period. The connector assemblies shall be externally cleaned, unmated, and examined for water penetration into the connector. The change in optical transmittance shall be measured after the test (see 4.7.1.4).

4.9.7 Impact (see 3.13.7). The unmated cables assembly with backshell and dust cover shall be tested in accordance with method 2015 of MIL-STD-1344 (see figure 3). The cable assembly shall be repeatedly dropped observing the height sequence (highest drops first) and number of drops specified. The cable assembly shall be extended its full length from the test fixture. The plug or receptacle shall be dropped eight times (moderate service class in accordance with method 2015 of MIL-STD-1344) and rotated after each fall so that the connector strikes the impact pad in eight different radial positions. The test assemblies shall be examined for damage, then mated. The terminus cleaning procedure of 3.13.11 may be employed after exposure and prior to mating. The change in optical transmittance shall be measured after the test (see 4.7.1.4).

4.9.8 Temperature humidity cycling (see 3.12.8). Cable-connector assemblies (at least one mated and one unmated), shall be tested in accordance with method 4030 of MIL-STD-1678 for ten cycles. The subcycle shall be included in the testing. The change in optical transmittance shall be measured after the test (see 4.7.1.4).

4.9.9 Salt spray (corrosion) (see 3.13.9). Mated cable-connector assemblies shall be tested in accordance with method 1001 of MIL-STD-1344. The exposure time shall be 500 hours, and the exposure temperature 35°C. After test exposure, the assemblies shall be externally cleaned and examined under three-power magnification for salt penetration into the connector junction area and damage to external parts.

4.9.10 Sand and dust (see 3.13.10). Mated cable connector assemblies shall be tested in accordance with method 110 of MIL-STD-202. The change in optical transmittance shall be measured during and after the test (see 4.7.1.4).



Source: https://assist.dla.mil -- Downloaded: 2016-11-16T10:38Z
Check the source to verify that this is the current version before use.

4.9.11 Terminus cleaning (see 3.13.11). The optical face of the terminus shall be cleaned according to the instructions supplied by the connector manufacturer. (The terminus shall not be removed from its operational position within the connector to facilitate cleaning).

4.9.12 Flammability (see 3.13.12). Mated and unmated cable-connector assemblies shall be tested in accordance with method 1012 of MIL-STD-1344. Mated assemblies shall be exposed to a three-fourths flame height applied for ten seconds (test condition C) to the region of the mated pair interface. The change in optical transmittance shall be measured during the test, and after the test once the test sample has returned to room temperature (see 4.7.1.4). The sample shall then be demated, and the unmated connector assembly with backshell and dust cover exposed to a one and one-half inch flame height applied for 60 seconds (test condition A) to the backshell-strain relief interface region.

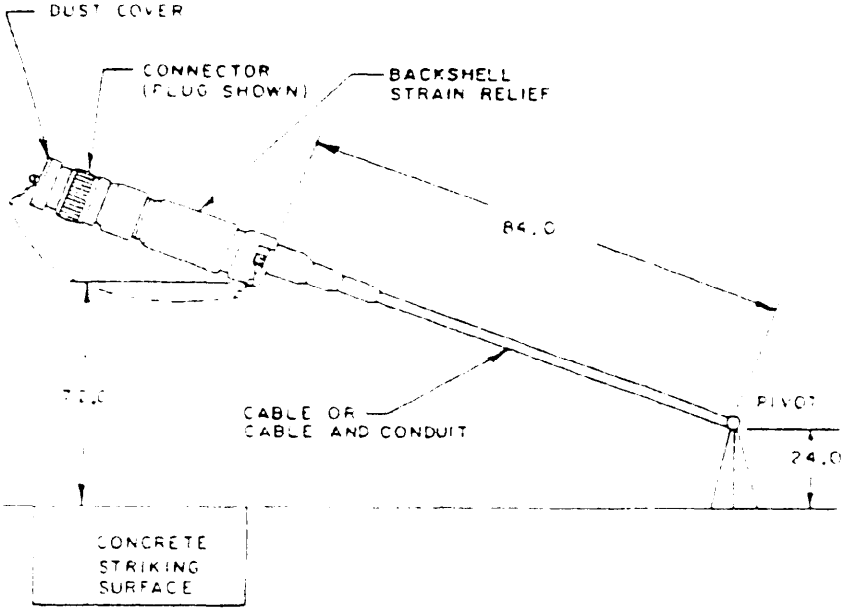


| Inches | mm |
|---|---|
| 24.0 | 610. |
| 72.0 | 1829. |
| 84.0 | 2134. |

NOTES:
1. Dimensions are in inches.
2. Metric equivalents are given for general information only.

FIGURE 3. Impact test fixture connector setup.



Source: https://assist.dla.mil -- Downloaded: 2016-11-16T10:38Z
Check the source to verify that this is the current version before use.

4.9.13 Freezing water (see 3.13.13). Mated cable connector assemblies shall be tested in accordance with method 4050 of DOD-STD-1678, with the exception that the connector shall be completely immersed in water and that the low test temperature shall be the low operating temperature. The vessel containing the water need not be sealed. The size of the vessel shall be such that, when the connector is placed in the center of the vessel, the connector is within 150 mm of the sides, top and bottom. The change in optical transmittance shall be measured during and after the test (see 4.7.1.4).

4.9.14 Nuclear radiation resistance (see 3.13.14). Mated cable-connector assemblies shall be tested in accordance with EIA-455-49. Unless otherwise specified (see 3.1), tests shall be performed at a wavelength of 1.30 ±0.02 μm and at the low operating temperature, 20°C, and the high operating temperature. The change in optical transmittance shall be measured during and after the test (see 4.7.1.4).

4.9.15 Fungus resistance (see 3.13.15). Connector materials that do not meet the requirements of fungus inert materials in accordance with MIL-STD-454, requirement 4 shall be tested for exposure to fungus in accordance with method 508 of MIL-STD-810.

5. PACKAGING

5.1 Packaging requirements. The requirements for packaging shall be in accordance with MIL-C-55330.

6. NOTES

(This section contains information of a general or explanatory nature that may be helpful, but is not mandatory.)

6.1 Intended use. The fiber optic connectors covered by this specification are intended for use in the following applications as specified (see 3.1) where their performance characteristics are required:

a. Fixed plant. Used in systems in fixed locations including indoor, outdoor aerial, direct burial, duct and undersea applications.

b. Tactical. Concerned with use in nonvolatile and mobile militarized systems.

c. Space. Which involves use in vehicles or systems deployed in outer space.

d. Avionics. Involving use in aircraft or missile systems.

e. Shipboard. Involving use in systems deployed in a mobile marine environment (on board or in tow).

f. Ground vehicle. Involving use in land vehicular systems.

g. Other specialized military specifications.

6.2 Acquisition requirements. Acquisition documents must specify the following:

a. Title, number, and date of the specification.

b. Issue of DODISS to be cited in the solicitation, and if required, the specific issue of individual documents referenced (see 2.1.1).

c. PIN.

d. Quantity of connectors required.

e. Inclusion of terminating tools, if desired (see 3.9).

f. Level of packaging required (see 5.1).

Note: Termini are not supplied with connectors acquired to this specification.



Source: https://assist.dla.mil -- Downloaded: 2016-11-16T10:38Z
Check the source to verify that this is the current version before use.

6.3 Qualification. With respect to products requiring qualification, awards will be made only for products which are, at the time of award of contract, qualified for inclusion in Qualified Products List QPL No. 28876 whether or not such products have actually been so listed by that date. The attention of the contractors is called to these requirements, and manufacturers are urged to arrange to have the products that they propose to offer to the Federal Government tested for qualification in order that they may be eligible to be awarded contracts or purchase orders for the products covered by this specification. The activity responsible for the Qualified Products List is Naval Sea Systems Command, SEA 5523, Washington, DC 20362-5101; however, information pertaining to qualification of products may be obtained from Defense Electronics Supply Center, (DESC-EQ), 1507 Wilmington Pike, Dayton, OH 45444-5000.

6.3.1 Conformity to qualified sample. It is understood that connectors supplied under the contract shall be identical in every respect to the qualification sample tested and found satisfactory, except for changes previously approved by the Government. Any unapproved changes from the qualification sample shall constitute cause for rejection.

6.3.2 Provisions governing qualification SD-6. Copies of "Provisions Governing Qualification SD-6" may be obtained upon application to Commanding Officer, Naval Publications and Forms Center, 5801 Tabor Avenue, Philadelphia, PA 19120.

6.4 Definitions.

6.4.1 Backshell. The backshell is the portion of the connector shell immediately to the rear of the fastening mechanism which is considered the front.

6.4.2 Coupling. Coupling is the part of the connector that aligns the optical termini.

6.4.3 Crosstalk. Crosstalk is a measure of the optical power picked up by an optical fiber from an adjacent energized fiber. If the optical power at the receiving end of the energized fiber is $P_0$ and the power in the disturbed fiber at the corresponding end is Pd then:

$$\text{Crosstalk} = 10\log_{10}(P_d/P_0) \text{ (dB)}$$

Since $P_d$ is always less than $P_0$, the crosstalk is always negative. The negative sign is commonly ignored.

6.4.4 Ferrule. Ferrule is a mechanical device or fixture used to hold the stripped end of an optical fiber.

6.4.5 Insert. Insert is the portion of the connector that contains precision alignment components.

6.4.6 Insertion loss. Insertion loss is the radiant power loss (dB) caused by absorption, scattering, diffusion, leaky waves, dispersion, microbends, macrobends, reflection, radiation, or other causes when a connector is inserted into the system.

6.4.7 Overfill launch. An overfill launch is a launch with a source spot size at least 100 percent the fiber spot size and source aperture at least 100 percent of the fiber numerical aperture.

6.4.8 Protective covering. A protective covering is a disposable protective cap or cover.

6.4.9 Return loss. Return loss is the optical power (dB) that is reflected back toward the source of optical power by a connector.

6.4.10 70/70 restricted launch. A 70/70 restricted launch is beam optics launch with a 70 percent spot size and source aperture equal to 70 percent of the fiber numerical aperture.

6.4.11 Shell. Shell is the primary connector housing.

6.4.12 Terminus. Terminus is the part of the connector that provides a means of positioning and holding the fiber within the connector.



Source: https://assist.dla.mil -- Downloaded: 2016-11-16T10:38Z
Check the source to verify that this is the current version before use.

6.5 Patent notice. The Government does not have royalty-free license under the following listed patents for the benefit of manufacturers of the item, either for the Government or for use in equipment to be delivered to the Government.

| Patent no. | Patent expiration date |
|---|---|
| 4,493,529 | 1/15/2002 |

6.6 Subject term (key word) listing.

| | |
|---|---|
| Backshells | Military specification |
| Cable, fiber optic | Multiple termini |
| Circular | Optical performance requirements |
| Connectors | Plug |
| Covers, protective | Receptacle |
| Dust covers | Screw threads |
| Environmental resistant | Strain relief, cable |
| Epoxies | Style, plug and receptacle |
| Fiber optic | Termini |
| Inserts | Test plugs |

6.7 Changes from previous issue. Asterisks are not used in this revision to identify changes with respect to the previous issue due to the extensiveness of the changes.



Source: https://assist.dla.mil -- Downloaded: 2016-11-16T10:38Z
Check the source to verify that this is the current version before use.

APPENDIX

CONNECTOR INTERFACE DIMENSIONS

10. SCOPE

10.1 Scope. This appendix lists the connector interface dimensions and is a mandatory part of the specification. The information contained herein is intended for compliance.

20. APPLICABLE DOCUMENTS

This section is not applicable to this appendix.

30. DRAWINGS

30.1 Interface dimension. The connector interface dimension drawings (figures 4 through 11) are listed as follows.



Source: https://assist.dla.mil -- Downloaded: 2016-11-16T10:38Z
Check the source to verify that this is the current version before use.

APPENDIX

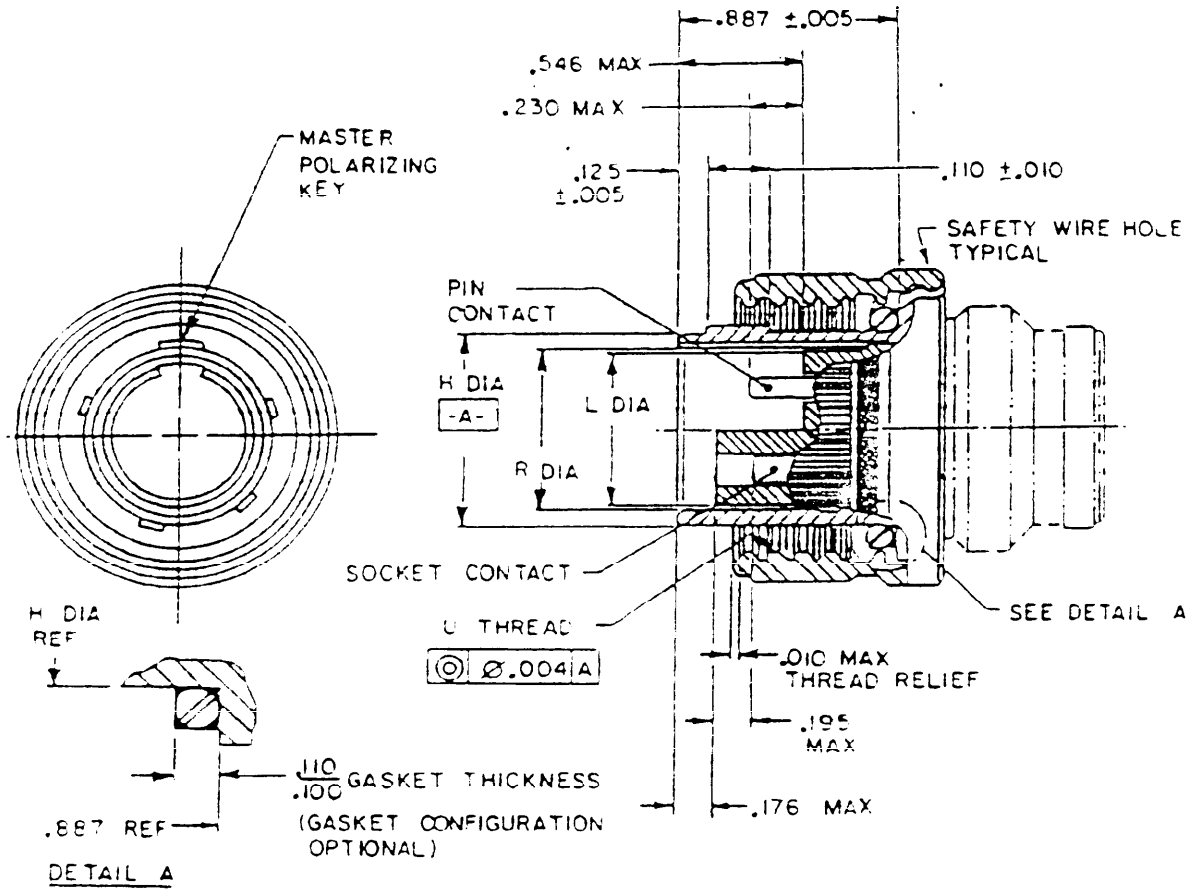


| Shell size | U thread class 2B | H dia. | R dia. | L dia. |
|---|---|---|---|---|
| 11 | .750-.1P-.2L-D.S. | .502 (12.75)<br>.492 (12.50) | .383 (9.73)<br>.373 (9.47) | .365 (9.27)<br>.361 (9.17) |
| 13 | .875-.1P-.2L-D.S. | .626 (15.90)<br>.616 (15.65) | .505 (12.83)<br>.495 (12.57) | .487 (12.37)<br>.483 (12.27) |
| 15 | 1.062-.1P-.2L-D.S. | .798 (20.27)<br>.788 (20.02) | .683 (17.35)<br>.673 (17.09) | .665 (16.89)<br>.661 (16.79) |
| 23 | 1.500-.1P .2L-D.S. | 1.220 (30.99)<br>1.210 (30.73) | 1.089 (27.66)<br>1.079 (27.41) | 1.073 (27.25)<br>1.063 (27.00) |

| Inches | mm |
|---|---|
| .004 | 0.10 |
| .005 | 0.13 |
| .010 | 0.25 |
| .100 | 2.54 |
| .110 | 2.79 |
| .125 | 3.18 |
| .176 | 4.47 |
| .195 | 4.95 |
| .230 | 5.84 |
| .546 | 13.87 |
| .887 | 22.53 |

FIGURE 4. Interface dimensions, connector, plug, fiber optic.



Source: https://assist.dla.mil -- Downloaded: 2016-11-16T10:38Z
Check the source to verify that this is the current version before use.

NOTES:
1. Dimensions are in inches.
2. Metric equivalents are given for general information only.
3. Metric equivalents are in parentheses.
4. Dimensions apply after plating.
5. Mating key positions and dimensions are shown on figure 5.
6. This design information establishes connector intermating criteria.
7. Rear end connector design for attachment of nonrotatable strain relief hardware and is shown on figure 8.
8. Dimension includes terminus axial float; terminus will move back during mating.
9. See MIL-C-28876/6 through MIL-C-28876/9 for appropriate plug outer configuration dimensions.

FIGURE 4. Interface dimensions, connector, plug, fiber optic - Continued.



Source: https://assist.dla.mil -- Downloaded: 2016-11-16T10:38Z
Check the source to verify that this is the current version before use.

APPENDIX

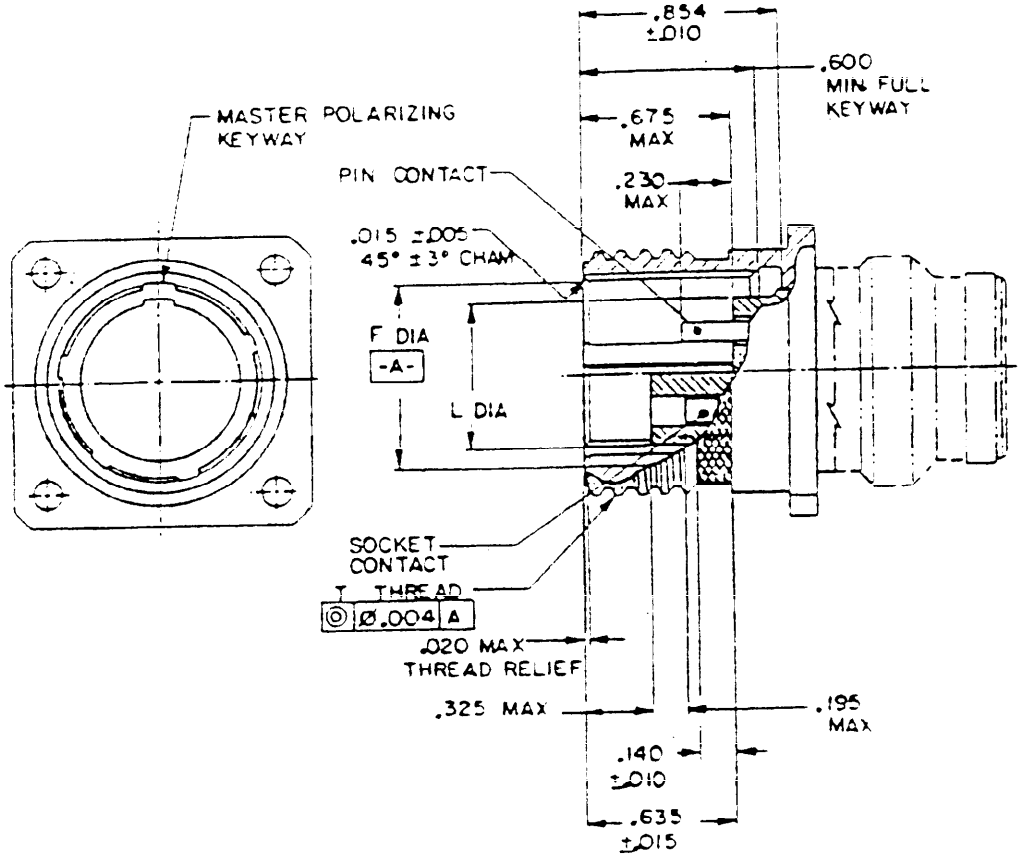


| Shell size | T thread class 2A | F dia. | L dia. |
|---|---|---|---|
| 11 | .750-.1P-.2L-D.S. | .515 (13.08)<br>.506 (12.85) | .365 (9.27)<br>.361 (9.17) |
| 13 | .875-.1P-.2L-D.S. | .639 (16.23)<br>.630 (16.00) | .487 (12.37)<br>.483 (12.27) |
| 15 | 1.062-.1P-.2L-D.S. | .811 (20.60)<br>.800 (20.3) | .665 (16.89)<br>.661 (16.79) |
| 23 | 1.500-.1P .2L-D.S. | 1.233 (31.32)<br>1.224 (31.09) | 1.073 (27.25)<br>1.063 (27.00) |

| Inches | mm |
|---|---|
| .004 | 0.10 |
| .005 | 0.13 |
| .010 | 0.25 |
| .015 | 0.38 |
| .020 | 0.51 |
| .140 | 3.56 |
| .195 | 4.95 |
| .230 | 5.84 |
| .325 | 8.26 |
| .600 | 15.24 |
| .635 | 16.13 |
| .675 | 17.14 |
| .854 | 21.69 |

FIGURE 5. Interface dimensions, connector, receptacle, fiber optic.



Source: https://assist.dla.mil -- Downloaded: 2016-11-16T10:38Z
Check the source to verify that this is the current version before use.

APPENDIX

NOTES:
1. Dimensions are in inches.
2. Metric equivalents are given for general information only.
3. Metric equivalents are in parentheses.
4. Dimensions apply after plating.
5. Mating key positions and dimensions are shown on figure 6.
6. This design information establishes connector intermating criteria.
7. Rear end connector design for attachment of nonrotatable strain relief hardware and is shown on figure 8.
8. Dimension includes terminus axial float; terminus will move back during mating.
9. See MIL-C-28876/1 through MIL-C-28876/5 and MIL-C-28876/11 through MIL-C-28876/14 for appropriate plug outer configuration dimensions.

FIGURE 5. Interface dimensions, connector, receptacle, fiber optic - Continued.



Source: https://assist.dla.mil -- Downloaded: 2016-11-16T10:38Z
Check the source to verify that this is the current version before use.

APPENDIX

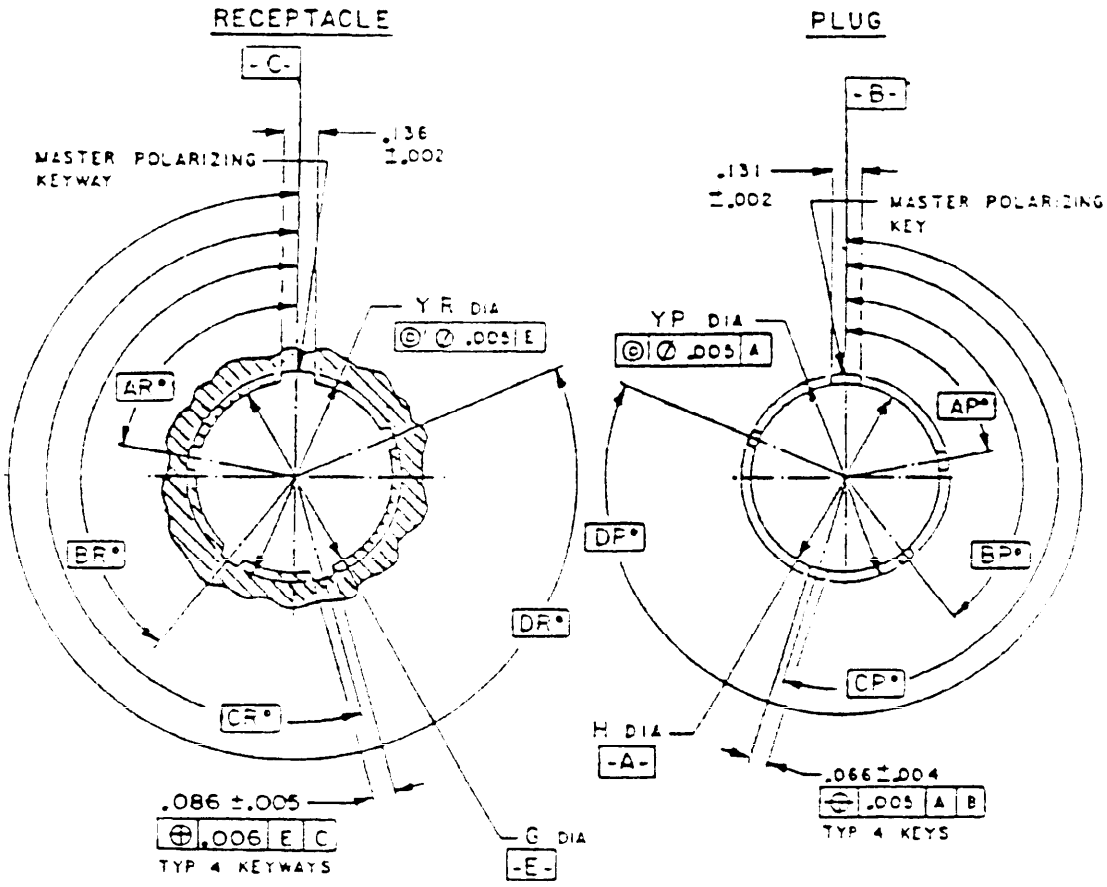


| Shell size | G dia. | H dia. |
|---|---|---|
| 11 | .515 (13.08)<br>.504 (12.80) | .502 (12.75)<br>.492 (12.50) |
| 13 | .637 (16.18)<br>.628 (15.95) | .626 (15.90)<br>.616 (15.65) |
| 15 | .809 (20.55)<br>.800 (20.32) | .798 (20.27)<br>.788 (20.02) |
| 23 | 1.233 (31.32)<br>1.224 (31.09) | 1.220 (30.99)<br>1.210 (30.73) |

| Inches | mm |
|---|---|
| .002 | 0.05 |
| .004 | 0.10 |
| .005 | 0.13 |
| .006 | 0.15 |
| .066 | 1.68 |
| .086 | 2.18 |
| .131 | 3.33 |
| .136 | 3.45 |

FIGURE 6. Connector, fiber optic, position of key and keyway mating.



Source: https://assist.dla.mil -- Downloaded: 2016-11-16T10:38Z
Check the source to verify that this is the current version before use.

APPENDIX

| Shell size | Key and keyway-arrange-ment | AR° or AP° BSC | BR° or BP° BSC | CR° or CP° BSC | DR° or DP° BSC | YP diameter | YR diameter |
|---|---|---|---|---|---|---|---|
| 11 and 13 | 1 | 95 | 141 | 208 | 236 | .599 (15.21) | .581 (14.76) |
| | 2 | 113 | 156 | 182 | 292 | .551 (14.00) | .569 (14.45) |
| | 3 | 90 | 145 | 195 | 252 | | |
| | 4 | 53 | 156 | 220 | 255 | .683 (17.35) | .705 (17.91) |
| | 5 | 119 | 146 | 176 | 298 | .675 (17.14) | .693 (17.60) |
| | 6 | 51 | 141 | 184 | 242 | | |
| 15 | 1 | 80 | 142 | 196 | 293 | .855 (21.72) | .877 (22.28) |
| | 2 | 135 | 170 | 200 | 310 | .847 (21.51) | .865 (21.97) |
| | 3 | 49 | 169 | 200 | 244 | | |
| | 4 | 66 | 140 | 200 | 257 | .925 (23.50) | .947 (24.05) |
| | 5 | 62 | 145 | 180 | 280 | .917 (23.29) | .935 (23.75) |
| | 6 | 79 | 153 | 197 | 272 | | |
| 23 | 1 | 80 | 142 | 196 | 293 | 1.275 (32.39) | 1.301 (33.04) |
| | 2 | 135 | 170 | 200 | 310 | 1.267 (32.18) | 1.289 (32.74) |
| | 3 | 49 | 169 | 200 | 244 | | |
| | 4 | 66 | 140 | 200 | 257 | | |
| | 5 | 62 | 145 | 180 | 280 | | |
| | 6 | 79 | 153 | 197 | 272 | | |

NOTES:
1. Dimensions are in inches.
2. Metric equivalents are given for general information only.
3. Metric equivalents are in parentheses.
4. Dimensions apply after plating.

FIGURE 6. Connector, fiber optic, position of key and keyway mating - Continued.



Source: https://assist.dla.mil -- Downloaded: 2016-11-16T10:38Z
Check the source to verify that this is the current version before use.

APPENDIX

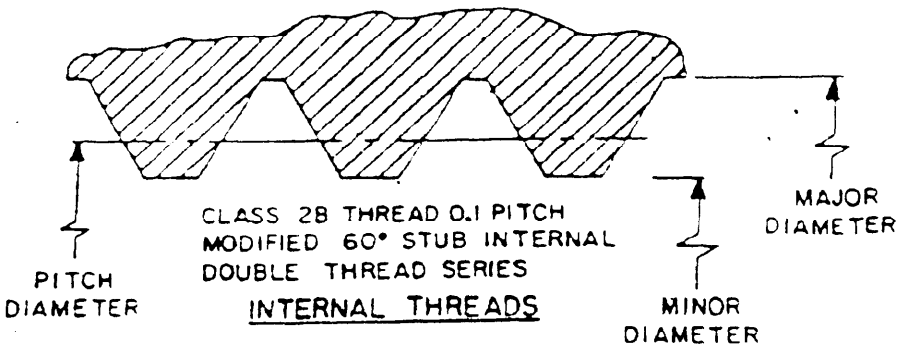


| Shell size | Designation | | |
|---|---|---|---|
| | Thread size | Pitch | Lead |
| 11 | .7500 | .1 | .2 |
| 13 | .8750 | .1 | .2 |
| 15 | 1.0625 | .1 | .2 |
| 23 | 1.500 | .1 | .2 |

| Inches | mm | Inches | mm |
|---|---|---|---|
| .0100 | 0.254 | .8392 | 21.316 |
| .0120 | 0.305 | .8490 | 21.565 |
| .020 | 0.51 | .8590 | 21.819 |
| .100 | 2.54 | .8750 | 22.225 |
| .200 | 5.10 | .8790 | 22.327 |
| .7042 | 17.887 | .8950 | 22.733 |
| .7142 | 18.141 | 1.0025 | 25.464 |
| .7240 | 18.390 | 1.0145 | 25.768 |
| .7340 | 18.644 | 1.0285 | 26.124 |
| .7500 | 19.050 | 1.0405 | 26.429 |
| .7540 | 19.152 | 1.0625 | 26.988 |
| .7700 | 19.588 | 1.0665 | 27.089 |
| .8292 | 21.062 | 1.0865 | 27.597 |

| Shell size | Internal thread limits of size | | | | | |
|---|---|---|---|---|---|---|
| | Minor diameter | | Pitch diameter | | Major diameter | |
| | Limits | | Limits | | Limits | |
| | Max | Min | Max | Min | Max | Min |
| 11 | .7142 | .7042 | .7340 | .7240 | .7700 | .7540 |
| 13 | .8392 | .8292 | .8590 | .8490 | .8950 | .8790 |
| 15 | 1.0145 | 1.00025 | 1.0405 | 1.0285 | 1.0865 | 1.0665 |
| 23 | 1.4520 | 1.4400 | 1.4780 | 1.4660 | 1.5240 | 1.5040 |

NOTES:
1. Dimensions are in inches.
2. Metric equivalents are given for general information only.
3. Formulas for these values are given in table VII of MIL-STD-1373.
4. For all other dimensions not shown above, see MIL-STD-1373.

FIGURE 7. Connector mating threads (internal).



Source: https://assist.dla.mil -- Downloaded: 2016-11-16T10:38Z
Check the source to verify that this is the current version before use.

APPENDIX

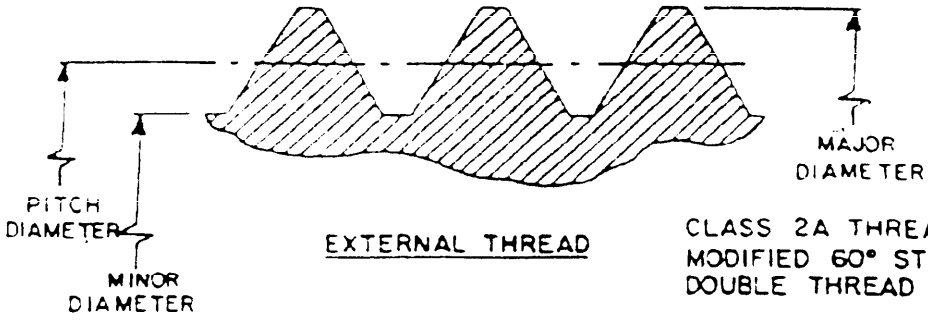


EXTERNAL THREAD

CLASS 2A THREAD 0.1 PITCH MODIFIED 60° STUB EXTERNAL DOUBLE THREAD SERIES

| Shell size | Designation | | |
|---|---|---|---|
| | Thread size | Pitch | Lead |
| 11 | .7500 | .1 | .2 |
| 13 | .8750 | .1 | .2 |
| 15 | 1.0625 | .1 | .2 |
| 23 | 1.500 | .1 | .2 |

| Inches | mm | Inches | mm |
|---|---|---|---|
| .0015 | 0.038 | .8035 | 20.409 |
| .0020 | 0.51 | .8175 | 20.764 |
| .0080 | 0.203 | .8395 | 21.323 |
| .0100 | 0.254 | .8475 | 21.526 |
| .0120 | 0.305 | .8655 | 21.984 |
| .100 | 2.54 | .8735 | 22.187 |
| .200 | 5.10 | .8750 | 22.225 |
| .6785 | 17.234 | .9705 | 24.651 |
| .6925 | 17.590 | .9885 | 25.108 |
| .7145 | 18.148 | 1.0165 | 25.819 |
| .7225 | 18.352 | 1.0265 | 26.073 |
| .7405 | 18.809 | 1.0485 | 26.632 |
| .7485 | 19.012 | 1.0605 | 26.937 |
| .7500 | 19.050 | | |

| Shell size | External thread limits of size | | | | | |
|---|---|---|---|---|---|---|
| | Major diameter | | Pitch diameter | | Minor diameter | |
| | Limits | | Limits | | Limits | |
| | Max | Min | Max | Min | Max | Min |
| 11 | .7485 | .7405 | .7225 | .7145 | .6925 | .6785 |
| 13 | .8735 | .8655 | .8475 | .8390 | .8175 | .8035 |
| 15 | 1.0605 | 1.0485 | 1.0265 | 1.0165 | .9885 | .9705 |
| 23 | 1.4980 | 1.4860 | 1.4616 | 1.4526 | 1.4260 | 1.4080 |

NOTES:
1. Dimensions are in inches.
2. Metric equivalents are given for general information only.
3. Formulas for these values are given in table VII of MIL-STD-1373.
4. For all other dimensions not shown above, see MIL-STD-1373.

FIGURE 8. Connector mating threads (external).



Source: https://assist.dla.mil -- Downloaded: 2016-11-16T10:38Z
Check the source to verify that this is the current version before use.

APPENDIX

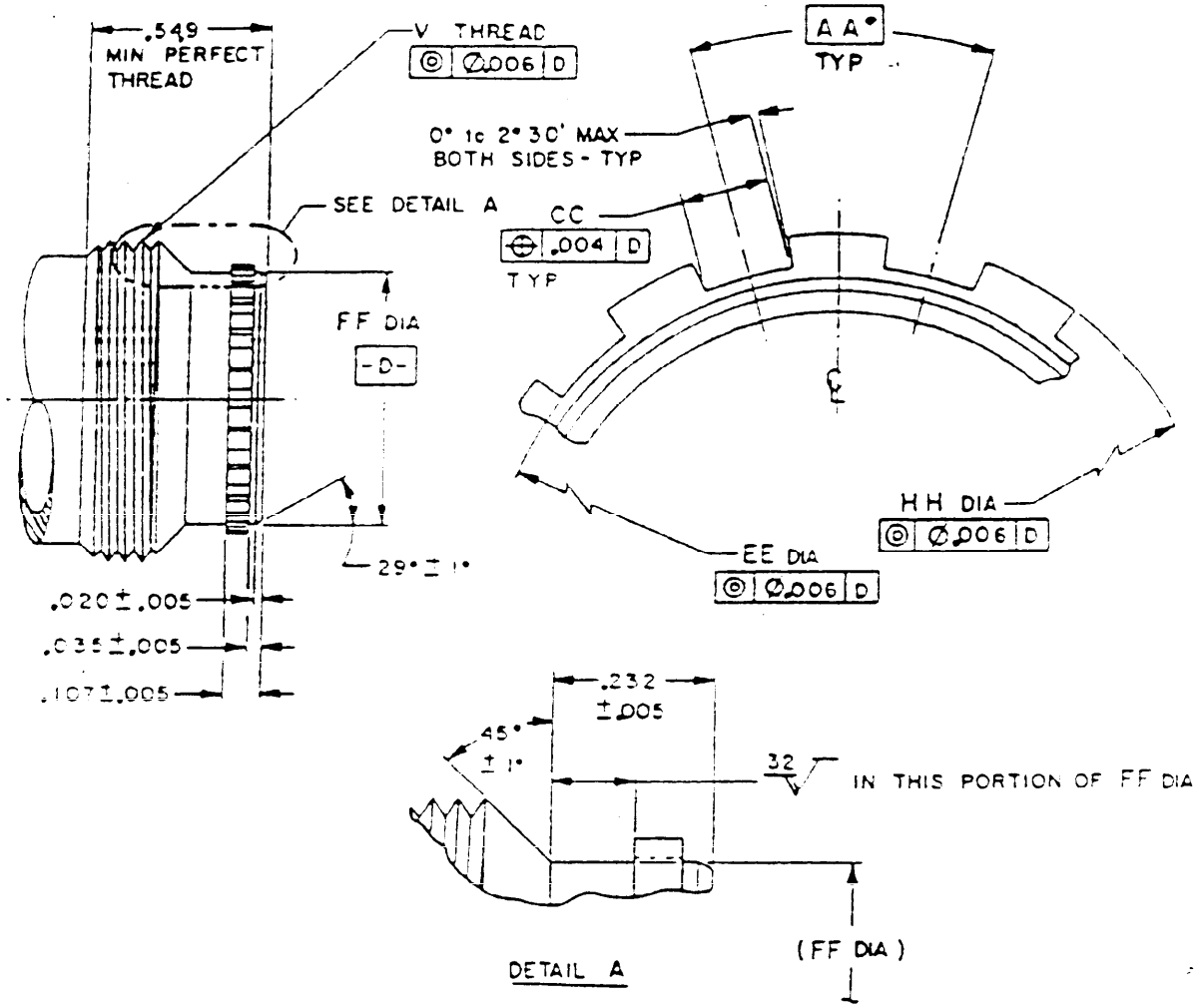


| Inches | mm |
|---|---|
| .004 | 0.10 |
| .005 | 0.13 |
| .006 | 0.15 |
| .020 | 0.51 |
| .035 | 0.89 |
| .107 | 2.71 |
| .232 | 5.89 |
| .549 | 13.94 |

FIGURE 9. Connector back-end configuration.



Source: https://assist.dla.mil -- Downloaded: 2016-11-16T10:38Z
Check the source to verify that this is the current version before use.

APPENDIX

| Shell size | AA BSC | CC | V thread class 2A | EE diameter | FF diameter | HH diameter |
|---|---|---|---|---|---|---|
| 11 | 20° | .0534 (1.356)<br>.0484 (1.229) | .750-20 UNEF | .547 (13.89)<br>.541 (13.74) | .538 (13.67)<br>.532 (13.51) | .571 (14.50)<br>.565 (14.35) |
| 13 | 20° | .0634 (1.610)<br>.0584 (1.483) | .875-20 UNEF | .662 (16.81)<br>.656 (16.66) | .653 (16.59)<br>.647 (16.43) | .686 (17.42)<br>.680 (17.27) |
| 15 | 18° | .0679 (1.725)<br>.0629 (1.598) | 1.000-20 UNEF | .797 (20.24)<br>.791 (20.09) | .788 (20.02)<br>.782 (19.86) | .821 (20.85)<br>.815 (20.70) |
| 23 | 12° | .0664 (1.687)<br>.0649 (1.648) | 1.4375-18 UNEF | 1.224 (31.09)<br>1.222 (31.04) | 1.217 (30.91)<br>1.211 (30.76) | 1.250 (31.75)<br>1.244 (31.60) |

NOTES:
1. Dimensions are in inches.
2. Metric equivalents are given for general information only.
3. Metric equivalents are in parentheses.
4. Dimensions apply after plating.
5. This design information establishes interface criteria for strain relief assembly attachment in accordance with figure 10.

FIGURE 9. Connector back-end configuration - Continued.



Source: https://assist.dla.mil -- Downloaded: 2016-11-16T10:38Z
Check the source to verify that this is the current version before use.

APPENDIX

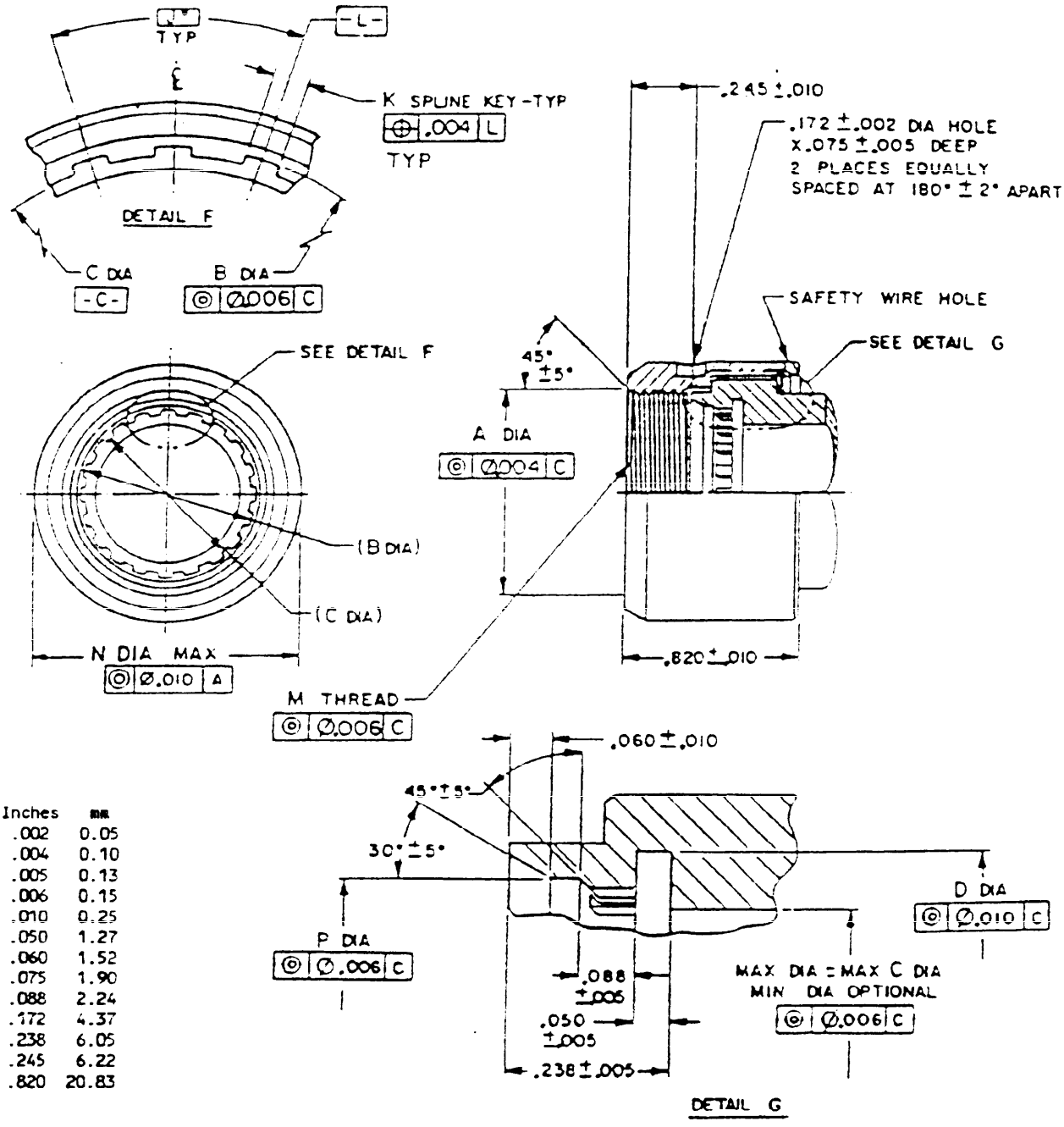


| Inches | mm |
|---|---|
| .002 | 0.05 |
| .004 | 0.10 |
| .005 | 0.13 |
| .006 | 0.15 |
| .010 | 0.25 |
| .050 | 1.27 |
| .060 | 1.52 |
| .075 | 1.90 |
| .088 | 2.24 |
| .172 | 4.37 |
| .238 | 6.05 |
| .245 | 6.22 |
| .820 | 20.83 |

FIGURE 10. Interface dimensions, connector, fiber optic strain relief assembly attachment.



Source: https://assist.dla.mil -- Downloaded: 2016-11-16T10:38Z
Check the source to verify that this is the current version before use.

APPENDIX

| Shell size | A dia | B dia | C dia | D dia | J BSC | K | M thread class 2B | N dia | P dia |
|---|---|---|---|---|---|---|---|---|---|
| 11 | .770 (19.56 .750 (19.05) | .585 (14.86) .579 (14.71) | .559 (14.20) .553 (14.05) | .647 (16.43) .625 (15.88) | 40° | .0445 (1.130) .0395 (1.003) | .750-20 UNEF | .960 (24.38) | .617 (15.57) .605 (15.37) |
| 13 | .895 (22.73) .875 (22.22) | .700 (17.78) .694 (17.63) | .674 (17.12) .668 (16.97) | .762 (19.35) .740 (18.80) | 40° | .0545 (1.384) .0495 (1.257) | .875-20 UNEF | 1.085 (27.56) | .732 (18.59) .720 (18.29) |
| 15 | 1.020 (25.91) 1.000 (25.40) | .835 (21.21) .803 (21.06) | .809 (20.55) .803 (20.40) | .897 (22.78) .875 (22.22) | 36° | .0590 (1.499) .0540 (1.372 | 1.000-20 UNEF | 1.255 (31.88) | .867 (22.02) .855 (21.72) |
| 23 | 1.458 (37.03) 1.438 (36.52) | 1.264 (32.11) 1.258 (31.95) | 1.238 (31.44) 1.232 (31.29) | 1.326 (33.68) 1.304 (33.12) | 24° | .0575 (1.461) .0560 (1.422) | 1.4375-18 UNEF | 1.695 (43.05) | 1.296 (32.92) 1.284 (32.61) |

NOTES:
1. Dimensions are in inches.
2. Metric equivalents are given for general information only.
3. Metric equivalents are in parentheses.
4. Dimensions apply after plating.
5. The coupling nut shall be captive and free to rotate on strain relief assembly.

FIGURE 10. Interface dimensions, connector, fiber optic strain relief assembly attachment - Continued.



Source: https://assist.dla.mil -- Downloaded: 2016-11-16T10:38Z
Check the source to verify that this is the current version before use.

APPENDIX

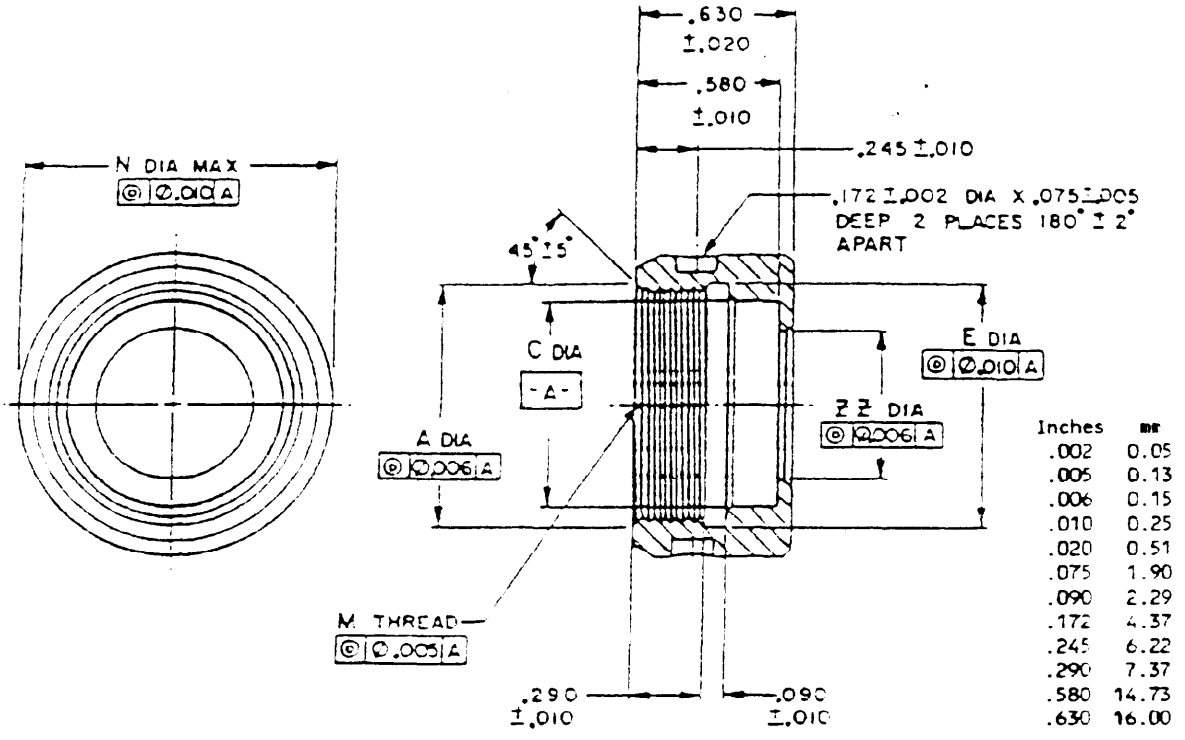


| Shell size | U thread class 2B | A dia. | C dia. | E dia. | N dia (max) | ZZ dia |
|---|---|---|---|---|---|---|
| 11 | .750-20 UNEF | .766 (19.46)<br>.754 (19.15) | .616 (15.65)<br>.594 (15.09) | .767 (19.48)<br>.753 (19.13) | .960 (24.38) | .340 (8.64) |
| 13 | .875-20 UNEF | .891 (22.63)<br>.879 (22.33) | .731 (18.57)<br>.709 (18.01) | .892 (22.66)<br>.878 (22.30) | 1.085 (27.56) | .460 (11.68) |
| 15 | 1.000-20 UNEF | 1.016 (25.81)<br>1.004 (25.50) | .866 (22.00)<br>.844 (21.44) | 1.017 (25.83)<br>1.003 (25.48) | 1.255 (31.88) | .645 (16.38) |
| 23 | 1.4375-20 UNEF | 1.458 (37.03)<br>1.438 (36.52) | 1.306 (33.17)<br>1.284 (32.61) | 1.457 (37.01)<br>1.443 (36.65) | 1.695 (43.05) | 1.065 (27.05) |

NOTES:
1. Dimensions are in inches.
2. Metric equivalents are given for general information only.
3. Metric equivalents are in parentheses.
4. Dimensions apply after plating.

FIGURE 11. Interface dimensions, connector, fiber optic strain relief assembly attachment.



Source: https://assist.dla.mil -- Downloaded: 2016-11-16T10:38Z
Check the source to verify that this is the current version before use.

CONCLUDING MATERIAL

Custodians:
Army - CR
Navy - SH
Air Force - 85
NASA - NA

Review activities:
Army - MI
Navy - AS, MC
Air Force - 17, 19, 80, 90, 99
DLA - ES

User activities:
Navy - OS, YD
Air Force - 13, 14

Preparing activity:
Navy - SH

Agent:
DLA - ES

(Project 6060-0093)



Source: https://assist.dla.mil -- Downloaded: 2016-11-16T10:38Z
Check the source to verify that this is the current version before use.

# STANDARDIZATION DOCUMENT IMPROVEMENT PROPOSAL

**INSTRUCTIONS**

1. The preparing activity must complete blocks 1, 2, 3, and 8. In block 1, both the document number and revision letter should be given.
2. The submitter of this form must complete blocks 4, 5, 6, and 7.
3. The preparing activity must provide a reply within 30 days from receipt of the form.

NOTE: This form may not be used to request copies of documents, nor to request waivers, or clarification of requirements on current contracts. Comments submitted on this form do not constitute or imply authorization to waive any portion of the referenced document(s) or to amend contractual requirements.

| I RECOMMEND A CHANGE: | 1. DOCUMENT NUMBER<br>MIL-C-28876D | 2. DOCUMENT DATE (YYMMDD)<br>9 JULY 1992 |
|---|---|---|

3. DOCUMENT TITLE CONNECTORS, FIBER OPTIC, CIRCULAR, PLUG AND RECEPTACLE STYLE MULTIPLE REMOVABLE TERMINI, GENERAL SPECIFICATION FOR

4. NATURE OF CHANGE (Identify paragraph number and include proposed rewrite, if possible. Attach extra sheets as needed.)

5. REASON FOR RECOMMENDATION

6. SUBMITTER

| a. NAME (Last, First, Middle Initial) | b. ORGANIZATION | c. TELEPHONE (Include Area Code)<br>(1) Commercial<br>(2) DSN (If applicable) | d. DATE SUBMITTED (YYMMDD) |
|---|---|---|---|
| | | | |

7. PREPARING ACTIVITY

| a. NAME<br>TECHNICAL POINT OF CONTRACT<br>KAREN LONG, 06KB22, | b. TELEPHONE (Include Area Code)<br>(1) Commercial: (703) 602-8178<br>(2) AUTOVON: 332-8178 |
|---|---|
| c. ADDRESS (Include Zip Code)<br>Commander<br>NAVAL SEA SYSTEMS COMMAND<br>ATTN: 5523<br>WASHINGTON, DC 20362-5101 | IF YOU DO NOT RECEIVE A REPLY WITHIN 45 DAYS, CONTACT:<br>Defense Quality and Standardization Office<br>5203 Leesburg Pike, Suite 1403, Falls Church, VA 22041-3466<br>Telephone (703) 756-2340 AUTOVON 289-2340 |



Source: https://assist.dla.mil -- Downloaded: 2016-11-10T10:38Z
Check the source to verify that this is the current version before use.