MILITARY SPECIFICATION

SEMICONDUCTOR DEVICE, DIODE, SILICON, VOLTAGE REGULATOR B AND RB TYPES, 1N2804 THRU 1N2811, 1N2813, 1N2814, 1N2816, 1N2818 THRU 1N2820, 1N2822 THRU 1N2827, 1N2829, 1N2831 THRU 1N2838, 1N2840 THRU 1N2846, 1N4557 THRU 1N4562, JAN, JANTX, JANTXV and JANS

This specification is approved for use by all Departments and Agencies of the Department of Defense.

1. SCOPE

1.1 Scope. The specification covers the detail requirements for 50 watt, silicon voltage regulator diodes: B type (standard polarity); RB type (reverse polarity). Four levels of product assurance are provided for each device type as specified in MIL-S-19500.

1.2 Physical dimensions. See figure 1. (TO-3).

1.3 Maximum ratings. Maximum ratings are as shown in columns 4, 8, and 10 of table V herein and as follows:

Derate P_T = 50 W at $T_C \geq \pm 75°C$ at 0.5 W/°C above $T_C \geq \pm 75°C$.
$-65°C \leq T_{op} \leq 175°C$; $-65°C \leq T_{STG} \leq 200°C$.

1.4 Primary electrical characteristics. Primary electrical characteristics are as shown in columns 2, 9, 12, and 14 of table V herein and as follows:

Thermal resistance ($R_{\theta JC}$) = 2.0°C/W maximum.

2. APPLICABLE DOCUMENTS.

2.1 Issues of documents. The following documents, of the issue in effect on date of invitation for bids or request for proposal, form a part of the specification to the extent specified herein.

SPECIFICATIONS

MILITARY

MIL-S-19500 - Semiconductor Devices, General Specification for.

STANDARDS

MILITARY

MIL-STD-750 - Test Methods for Semiconductor Devices.

(Copies of specifications, standards, drawings, and publications required by contractors in connection with specific procurement functions should be obtained from the procuring activity or as directed by the contracting officer.)

Beneficial comments (recommendations, additions, deletions) and any pertinent data which may be of use in improving this document should be addressed to: Commander, Naval Electronic Systems Command, ATTN: ELEX 5043, Department of the Navy, Washington, D.C. 20360 by using the self-addressed Standardization Document Improvement Proposal (DD Form 1426) appearing at the end of this document or by letter.

Source: https://assist.dla.mil -- Downloaded: 2016-12-03T21:20Z
Check the source to verify that this is the current version before use.

3. REQUIREMENTS

3.1 Detail specification. The individual item requirements shall be in accordance with MIL-S-19500, and as specified herein.

3.2 Design, construction, and physical dimensions. The design, construction, and physical dimensions shall be as specified in MIL-S-19500 and figure 1 herein. Current density of internal conductors shall be as specified in 3.6.5 of MIL-S-19500. No aluminum case shall be permitted.

3.2.1 Polarity. Standard units (B) shall have the anode connected to the base. The two pins shall be connected internally. Reversed units (RB) shall have the cathode connected to the base.

3.3 Marking. Marking shall be in accordance with MIL-S-19500. At the option of the manufacturer, the marking of the country of origin may be omitted from the body of the semiconductor.

3.3.1 RB types. Reversed (cathode to base) units shall be marked with an "R" preceding the "B" in the type designation and with a contrasting dot on the base plate.

4. QUALITY ASSURANCE PROVISIONS

4.1 Sampling and inspection. Sampling and inspection shall be in accordance with MIL-S-19500, and as specified herein. Lot accumulation period shall be six months in lieu of six weeks.

4.2 Screening (JANS, JANTXV and JANTX levels only). Screening shall be in accordance with MIL-S-19500 (table II) and as specified herein. The following measurements shall be made in accordance with table I herein. Devices that exceed the limits of table I herein shall not be acceptable.

Screen (see table II of MIL-S-19500)	Measurement	
	JANS level	JANTX and JANTXV levels
9	I_{R1} and V_Z (for devices with $V_{Z(NOM)} \geq 10$ Vdc; see column 2 of table V)	Not applicable
11	I_{R1} and V_Z; ΔI_{R1} = 100% of initial value or 2 μAdc, whichever is greater; $\Delta V_Z = \pm 1\%$ of initial value (for devices with $V_{Z(NOM)} \geq 10$ Vdc; see column 2 of table V).	I_{R1} and V_Z
12	See 4.2.1	See 4.2.1
13	Subgroups 2 (except forward voltage test) and 3 of table I herein; ΔI_{R1} = 100% of initial value or 2 μAdc, whichever is greater; $\Delta V_Z = \pm 1\%$ of initial value	Subgroup 2 (except forward voltage test) of table I herein; ΔI_{R1} = 100% of initial value or 2 μAdc, whichever is greater; $\Delta V_Z = \pm 1\%$ of initial value

Source: https://assist.dla.mil -- Downloaded: 2016-12-03T21:20Z
Check the source to verify that this is the current version before use.

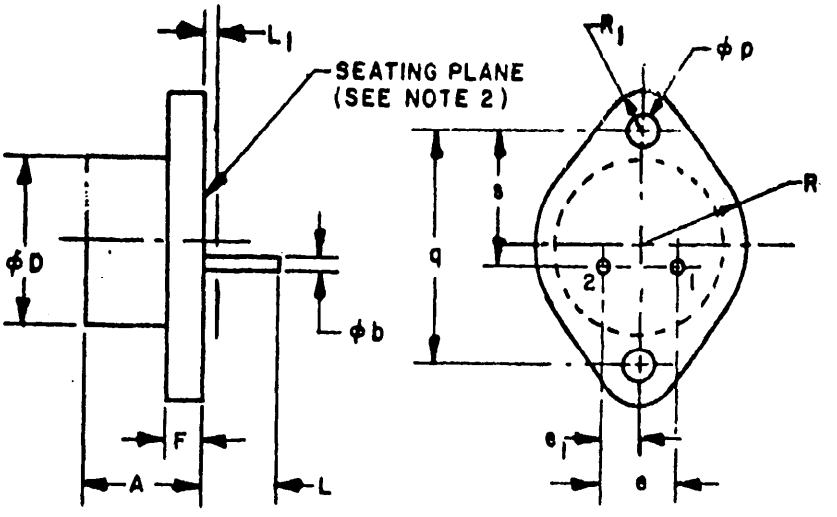

Symbol	Dimensions				Notes
	Inches		Millimeters		
	Min	Max	Min	Max	
A	.270	.380	6.86	9.65	
Øb	.048	.053	.97	1.35	
ØD	---	.875	---	22.23	
e	.420	.440	10.67	11.18	1
e_1	.205	.225	5.21	5.72	1
F	.060	.135	1.52	3.43	
L	.312	.500	7.92	12.70	
L_1	---	.050	---	1.27	
Øp	.151	.161	3.84	4.09	
q	1.177	1.197	29.90	30.40	
R	.495	.525	12.57	13.34	
R_1	.131	.188	3.33	4.78	
s	.655	.675	16.64	17.15	

NOTES:
1. These dimensions should be measured at points .050 (1.27 mm) .055 (1.40 mm) below seating plane. When gage is not used measurement will be made at the seating plane.
2. The seating plane of the header shall be flat within .001 (.03 mm) concave to .004 (.10 mm) convex .001 (.03 mm) concave to .006 (.15 mm) convex overall.
3. Dimensions are in inches.
4. Metric equivalents are given for general information only and are based upon 1.00 inch = 25.4 mm.
5. Pins 1 and 2 are internally connected with an interlock jumper.
6. Devices with B suffix have the anode internally connected to the case and devices with RB suffix (reverse polarity) have the cathode internally connected to the case.

FIGURE 1. Physical dimensions.

Source: https://assist.dla.mil -- Downloaded: 2016-12-03T21:20Z
Check the source to verify that this is the current version before use.

4.2.1 Power burn-in conditions. Power burn-in conditions are as follows:

I_Z = Column 15 of table V at a T_C = 150°C.

4.3 Qualification inspection. Qualification inspection shall be in accordance with MIL-S-19500 and as specified herein.

4.4 Quality conformance inspection. Quality conformance inspection shall be in accordance with MIL-S-19500 and as specified herein. Group A inspection shall be performed on each sublot.

4.4.1 Group A inspection. Group A inspection shall be conducted in accordance, with MIL-S-19500 and table I herein. End point electrical measurements shall be in accordance with the applicable steps of table IV herein.

4.4.2 Group B inspection. Group B inspection shall be conducted in accordance with the conditions specified for subgroup testing in table IVa (JANS) and table IVb (JAN, JANTX, and JANTXV) of MIL-S-19500, and tables IIa and IIb herein. Electrical measurements (end points) and delta requirements shall be in accordance with the applicable steps of table IV herein.

4.4.3 Group C inspection. Group C inspection shall be conducted in accordance with the conditions specified for subgroup testing in table V of MIL-S-19500 and table III herein. Electrical measurements (end points) and delta requirements shall be in accordance with the applicable steps of table IV herein.

4.5 Methods of inspection. Methods of inspection shall be as specified in the appropriate tables and as follows:

4.5.1 Surge current I_{ZSM}. The currents specified in column 10 of table V shall be applied in the reverse direction and shall be superimposed on the current (I_Z = column 5 of table V) a total of five surges at 1-minute intervals. Each individual surge shall be a 1/2 square wave pulse of 1/120 second duration or a 1/2 sine wave with the same effective (rms) current.

4.5.2 Voltage regulation $V_{Z(reg)}$. A current at 10 percent of I_Z (column 8) shall be maintained until thermal equilibrum is obtained and the V_Z shall be noted. The current shall then be increased to a level of 50 percent of I_Z (column 8) and maintained at this level until thermal equilibrum is obtained, at which time the voltage change shall not exceed column 9 of table V. During this test, the case temperature (T_C) of the diode shall be equal to 30 ±3°C.

4.5.3 Regulator voltage. The test current (column 5 of table V) shall be applied until thermal equilibrum is obtained. During this test, the case temperature (T_C) of the diode shall be equal to 30 ±3°C.

4.5.4 Temperature coefficient of regulator voltage (α_{VZ}). The device shall be temperature stabilized with current applied prior to reading regulator voltage at the specified case temperatures.

4.5.5 Inspection condition. Unless otherwise specified herein, all inspections shall be made at case temperature (T_C) of 30 ±3°C.

4.5.6 Test ratings. Test ratings shall be as shown in table V. Type numbers with the suffix "RB" shall have identical requirements as shown in table V for the corresponding B type except the polarity shall be as specified in 3.2.1 herein.

Source: https://assist.dla.mil -- Downloaded: 2016-12-03T21:20Z
Check the source to verify that this is the current version before use.

TABLE I. Group A inspection.

Inspections	MIL-STD-750		LTPD		Symbol	Limits		Unit
	Method	Conditions	JANS	JAN TX TXV		Min	Max	
Subgroup 1			15 (c=o)	5				
Visual and mechanical inspection	2071							
Subgroup 2			3 1/	5				
Forward voltage	4011	I_F = 10 Adc			V_F	---	1.5	Vdc
Reverse current	4016	V_R = column 11 of table V; DC method			I_{R1}	---	Column 12 of table V	µAdc
Regulator voltage	4021	I_Z = column 5 of table V			V_Z	Column 3 of table V	Column 4 of table V	Vdc
Subgroup 3				5				
High temperature operation		T_A = 150°C						
Reverse current	4016	V_R = column 11 of table V; DC method			I_{R2}	---	Column 16 of table V	µAdc
Subgroup 4				5				
Small-signal breakdown impedance	4051	I_Z = Column 5 of table V; I_{sig} = 10% I_Z			Z_Z	---	Column 6 of table V	ohms
Knee impedance	4051	I_{ZK} = 5 mAdc; I_{sig} = 10% of I_{ZK}			Z_{ZK}	---	Column 7 of table V	ohms
Subgroup 5								
(Not applicable)								
Subgroup 6		JANS level only	10					
Surge current (see 4.5.1)	4066	I_{ZSM} = Column 10 of table V			---	---	---	---
End point electrical measurements	---	See table IV, steps 1, 3, and 4						
Subgroup 7								
(Not applicable)								
Subgroup 8		JANS level only	10					
Voltage regulation (see 4.5.2)	---				$V_{Z(reg)}$	---	Column 9 of table V	Vdc
Temperature coefficient of regulator voltage (see 4.5.4)	4071	I_Z = column 5 of table V; T_1 = 30 ±3°C, T_2 = T_1 +100°C			α_{VZ}	---	Column 14 of table V	%/°C

1/ For JANS, all devices required by the specified LTPD shall be subjected to subgroups 2, 3, and 4 combined.

Source: https://assist.dla.mil -- Downloaded: 2016-12-03T21:20Z
Check the source to verify that this is the current version before use.

TABLE IIa. Group B inspection for JANS devices.

Inspection	MIL-STD-750 Method	MIL-STD-750 Conditions	Qualification and large lot quality conformance inspection LTPD	Small lot quality conformance inspection n/c
Subgroup 1			10	8/0
Physical dimensions	2066	See figure 1		
Subgroup 2			15	6/0
Solderability	2026			
Resistance to solvents	1022			
Subgroup 3			10	6/0
Thermal shock (temperature cycling)	1051	T(high) = 175°C		
Hermetic seal	1071			
a. Fine b. Gross				
Electrical measurements		See table V, steps 1, 3, 4, 5, and 6		
Die shear	2017			
Subgroup 4			10	N/A
Intermittent operating life	1037	I_Z = Column 8 of table V; T_C = 30 ±3°C; t_{on} = t_{off} = 3 minutes minimum for 2000 cycles		
Electrical measurements		See table IV, steps 1, 3, 4, 5, and 6		
Subgroup 5			10	12/2
Accelerated steady-state operation-life	1027	I_Z = column 15 of table V for 96 hours; T_A = 125°C or adjusted, as required, to give an average lot T_J= 275°C		
Electrical measurements		See table IV, steps 2, 3, 4, 5, and 6		

Source: https://assist.dla.mil -- Downloaded: 2016-12-03T21:20Z
Check the source to verify that this is the current version before use.

TABLE IIa. Group B inspection for JANS devices - Continued.

Inspection	MIL-STD-750		Qualification and large lot quality conformance inspection LTPD	Small lot quality conformance inspection n/c
	Method	Conditions		
Subgroup 6			10	8/0
Thermal resistance	4081	$R_{\theta JC}$ = 2.0°C/W maximum T_C = 30 ±3°C For purposes of this test "junction to case" shall be used in lieu of "junction to lead" and $R_{\theta JC}$" shall be used in lieu of "$R_{\theta JL}$". The case shall be the reference point for calculation of junction to case thermal resistance ($R_{\theta JC}$). The mounting arrangement shall be with heat sink to case.		

Source: https://assist.dla.mil -- Downloaded: 2016-12-03T21:20Z
Check the source to verify that this is the current version before use.

TABLE IIb. Group B inspection for JAN, JANTX, and JANTXV devices.

Inspection	MIL-STD-750		LTPD
	Method	Conditions	
Subgroup 1			15
Solderability	2026		
Resistance to solvents	1022		
Subgroup 2			10
Thermal shock (temperature cycling)	1051	T(high) = 175°C	
Surge current (see 4.5.1)	4066	I_{ZSM} = column 10 of table V	
Hermetic seal	1071		
a. Fine leak b. Gross leak			
Electrical measurements		See table IV, steps 1, 3, and 4	
Subgroup 3			5
Steady-state operation life	1027	T_C = 150°C; I_Z = column 15 of table V	
Electrical measurements		See table IV, steps 2, 3, and 4	
Subgroup 4			1 device/0 failure for each sublot
Decap internal visual (design verification)	2075		
Bond strength	2037	All internal wires shall be pulled separately	20(c=0)
Subgroup 5			15
Thermal resistance	4081	$R_{\theta JC}$ = 2.0°C/W maximum T_C = 30 ±3°C For purposes of this test "junction to case" shall be used in lieu of "junction to lead" and "$R_{\theta JC}$" shall be used in lieu of "$R_{\theta JL}$". The case shall be the reference point for calculation of junction to case thermal resistance ($R_{\theta JC}$). The mounting arrangement shall be with heat sink to case.	
Subgroup 6			5
High-temperature life (non-operating)	1032	T_A = 200°C	
Electrical measurements		See table IV, steps 2, 3, and 4	

Source: https://assist.dla.mil -- Downloaded: 2016-12-03T21:20Z
Check the source to verify that this is the current version before use.

TABLE III. Group C inspection for all quality levels.

Inspections	MIL-STD-750		LTPD	Symbol	Limits		Unit
	Method	Conditions			Min	Max	
Subgroup 1			15				
Physical dimensions	2066	See figure 1					
Subgroup 2			10				
Thermal shock (glass strain)	1056						
Hermetic seal	1071						
a. Fine leak b. Gross leak							
Moisture resistance	1021						
External visual	2071						
Electrical measurements		See table IV, steps 1, 3, 4, 5, and 6 (JANS) and steps 1, 3, and 4 (JAN, JANTX and JANTXV)					
Subgroup 3			10				
Shock	2016						
Vibration variable frequency	2056						
Constant acceleration	2006						
Electrical measurements		See table IV, steps 1, 3, 4, 5, and 6 (JANS) and steps 1, 3, and 4 (JAN, JANTX and JANTXV)					
Subgroup 4			15				
Salt atmosphere (corrosion)	1041						
Subgroup 5							
Not applicable.							
Subgroup 6			λ = 10				
Steady state operation life	1026	T_C = 150°C; I_Z = Column 15 of table V					
Electrical measurements		See table IV, steps 2, 3, 4, and 6 (JANS) and steps 2, 3, and 4 (JAN, JANTX, and JANTXV)					
Subgroup 7		JAN, JANTX, and JANTXV levels only	10				
Temperature coefficient of regulator voltage (see 4.5.4)	4071	I_Z = Column 5 of table V T_1 = 30 ±3°C, T_2 = T_1 +100°C each sublot		α_{VZ}	---	Column 14 of table V	%/°C
Voltage regulation (see 4.5.2)	---	Each sublot		$V_{Z(reg)}$	---	Column 9 of table V	Vdc

Source: https://assist.dla.mil -- Downloaded: 2016-12-03T21:20Z
Check the source to verify that this is the current version before use.

TABLE IV. Groups B and C electrical measurements.

Step	Inspection	MIL-STD-750			Symbol	Limits		Unit
		Method	Conditions			Min	Max	
1	Reverse current	4016	DC method; V_R = Column 11 of table V		I_{R1}	---	Column 12 of table V	uAdc
2	Reverse current	4016	DC method; V_R = Column 11 of table V		I_{R1}	---	Column 13 of table V	uAdc
3	Regulator voltage	4022	I_Z = Column 5 of table V		V_Z	Column 3 of table V	Column 4 of table V	Vdc
4	Small signal breakdown impedance	4051	I_Z = Column 5 of table V I_{sig} = 10% of I_Z		Z_Z	---	Column 6 of table V	ohms
5	Knee impedance	4051	I_{ZK} = 5 mAdc; I_{sig} = 0.5 mAdc		Z_{ZK}	---	Column 7 of table V	ohms
6	Forward voltage	4011	I_F = 10 Adc		ΔV_F 1/		+50 mVdc change from previously measured value.	

1/ Devices which exceed the Group A limits for this test shall not be accepted.

Source: https://assist.dla.mil -- Downloaded: 2016-12-03T21:20Z
Check the source to verify that this is the current version before use.

TABLE V. Characteristics and ratings.

Col 1	Col 2	Col 3	Col 4	Col 5	Col 6	Col 7	Col 8	Col 9	Col 10	Col 11	Col 12	Col 13	Col 14	Col 15	Col 16
Voltage group (see 4.8.6)	V_Z Nom	V_Z Min	V_Z Max	I_Z Test current T_C=30°C	Z_Z Imped-ance	Z_{ZK} Knee imped-ance	I_Z Max dc current T_C=30°C	$V_{Z(reg)}$ Voltage regula-tion	I_{ZSM} T_C=30°C	V_R Reverse voltage	I_{R1} Reverse current dc	I_{R1} Reverse current dc	α_{VZ} Tempera-ture coeffi-	I_Z Max dc current T_C=150°C	I_{R2} Reverse current dc T_A=150°
	volts	volts	volts	mAdc	ohms	ohms	mAdc	volts	Adc	volts	Adc	Adc	%/°C	mAdc	Adc
1N4557B,RB	3.9	3.70	4.09	3200	0.16	400	10000	0.66	40.0	0.5	150	300	-.050	3200	1/
1N4558B,RB	4.3	4.08	4.51	2900	0.16	500	9000	0.58	38.0	0.5	150	300	-.035	2950	
1N4559B,RB	4.7	4.46	4.93	2650	0.12	600	8000	0.40	35.0	1.0	100	200	.015	2650	
1N4560B,RB	5.1	4.84	5.35	2450	0.12	650	7500	0.36	32.0	1.0	20	50	.035	2450	
1N4561B,RB	5.6	5.32	5.88	2250	0.12	900	7000	0.34	30.0	1.0	20	50	.050	2250	
1N4562B,RB	6.2	5.89	6.51	2000	0.14	1000	6500	0.36	25.0	2.0	20	50	.055	2000	1/
1N2804B,RB	6.8	6.46	7.14	1850	0.2	70	7000	0.4	37.0	4.5	150	300	0.057	1850	1000
1N2805B,RB	7.5	7.13	7.87	1700	0.3	70	6360	0.5	33.0	5.0	100	200	.067	1700	750
1N2806B,RB	8.2	7.79	8.61	1500	0.4	70	5800	0.6	29.0	5.4	50	100	.070	1500	500
1N2807B,RB	9.1	8.65	9.55	1370	0.5	70	5240	0.7	26.5	6.1	25	50	.075	1370	400
1N2808B,RB	10	9.50	10.50	1200	0.6	80	4760	0.9	24.0	6.7	25	50	.081	1200	300
1N2809B,RB	11	10.45	11.55	1100	0.8	80	4330	1.0	21.5	8.4	10	20	.085	1100	200
1N2810B,RB	12	11.40	12.60	1000	1.0	80	3970	1.1	20.0	9.1	10	20	.079	1000	↓
1N2811B,RB	13	12.35	13.65	960	1.1	80	3750	1.2	18.5	9.9	10	20	.080	960	↓
1N2812B,RB	15	14.25	15.75	830	1.4	80	3170	1.5	15.5	11.4	10	20	.082	830	↓
1N2814B,RB	16	15.20	16.80	780	1.6	80	2970	1.6	14.75	12.2	10	20	.083	780	↓
1N2816B,RB	18	17.10	18.90	700	2.0	80	2640	1.9	12.75	13.7	10	20	.085	700	↓
1N2818B,RB	20	19.00	21.00	630	2.4	80	2380	2.3	11.75	15.2	10	20	.086	630	↓
1N2819B,RB	22	20.90	23.10	570	2.5	80	2160	2.5	10.5	16.7	10	20	.087	570	↓
1N2820B,RB	24	22.80	25.20	520	2.6	80	1980	2.6	9.75	18.2	10	20	.088	520	↓
1N2822B,RB	27	25.65	28.35	460	2.8	90	1760	2.9	8.25	20.6	10	20	.090	460	↓
1N2823B,RB	30	28.50	31.50	420	3.0	90	1590	3.0	7.75	22.8	10	20	.091	420	↓
1N2824B,RB	33	31.35	34.65	380	3.2	90	1440	3.2	7.25	25.1	10	20	.092	380	↓
1N2825B,RB	36	34.20	37.80	350	3.5	90	1320	3.4	6.5	27.4	10	20	.093	350	↓
1N2826B,RB	39	37.10	40.90	320	4.0	90	1220	3.6	5.88	29.7	10	20	.094	320	↓
1N2827B,RB	43	40.90	45.10	290	4.5	90	1110	3.8	5.38	32.7	10	20	.095	290	↓
1N2829B,RB	47	44.65	49.35	270	5.0	100	1020	4.0	4.90	35.8	10	20	.095	270	↓
1N2831B,RB	51	48.45	53.55	245	5.2	100	930	4.4	4.63	38.8	10	20	.096	245	↓
1N2832B,RB	56	53.20	58.80	220	6.0	110	850	4.75	4.13	42.6	10	20	.096	220	↓
1N2833B,RB	62	58.90	65.10	200	7	120	770	5.0	3.68	47.1	10	20	.097	200	↓
1N2834B,RB	68	64.60	71.40	180	8	140	700	5.5	3.35	51.7	10	20	.097	180	↓
1N2835B,RB	75	71.25	78.75	170	9	150	640	5.75	3.00	56.0	10	20	.098	170	↓
1N2836B,RB	82	77.90	86.10	150	11	160	580	6.25	2.75	62.2	10	20	.098	150	↓
1N2837B,RB	91	86.45	95.55	140	15	180	530	6.75	2.35	69.2	10	20	.099	140	↓
1N2838B,RB	100	95.0	105.0	120	20	200	480	7.5	2.25	76.0	10	20	.100	120	↓
1N2840B,RB	110	104.5	115.5	110	30	220	430	9.0	2.05	83.6	10	20	.100	110	↓
1N2841B,RB	120	114.0	126.0	100	40	240	400	9.5	1.88	91.2	10	20	.100	100	↓
1N2842B,RB	130	123.5	136.5	95	50	275	370	10.0	1.73	99.8	10	20	.100	95	↓
1N2843B,RB	150	142.5	157.5	85	75	400	320	12.0	1.50	114.0	10	20	.100	85	↓
1N2844B,RB	160	152.0	168.0	80	80	450	300	13.0	1.43	121.6	10	20	.100	80	↓
1N2845B,RB	180	171.0	189.0	68	90	525	260	14.5	1.25	136.8	10	20	.100	68	↓
1N2846B,RB	200	190.0	210.0	65	100	600	240	16.0	1.10	152.0	10	20	.100	65	↓

1/ This test is not applicable for devices 1N4557B, RB through 1N4562B,RB.

Source: https://assist.dla.mil -- Downloaded: 2016-12-03T21:20Z
Check the source to verify that this is the current version before use.

5. PACKAGING

5.1 Packaging. Packaging shall be in accordance with MIL-S-19500.

6. NOTES

6.1 Notes. The notes specified in MIL-S-19500 are applicable to this specification.

6.2 Ordering data. The contract or purchase order should specify:

a. Inspection data submittal, when required.

Custodians:
Army - ER
Navy - EC
Air Force - 17
NASA - MSFC-EG02

Review activities:
Army - MI, AR
Navy - SH
Air Force - 11, 19, 85
DLA - ES

User activities:
Army - SM
Navy - AS, CG, MC, OS
Air Force - 13, 19

Preparing activity:
Navy - EC

Agent:
DLA - ES

(Project 5961-0709)

Source: https://assist.dla.mil -- Downloaded: 2016-12-03T21:20Z
Check the source to verify that this is the current version before use.