MIL-HDBK-472
24 May 1966

MILITARY STANDARDIZATION HANDBOOK

MAINTAINABILITY PREDICTION

FSC-MISC

Source: https://assist.dla.mil -- Downloaded: 2017-02-16T09:13Z
Check the source to verify that this is the current version before use.

Source: https://assist.dla.mil -- Downloaded: 2017-02-16T09:13Z
Check the source to verify that this is the current version before use.

DEPARTMENT OF DEFENSE
WASHINGTON D.C. 20360

MIL-HDBK-472
MAINTAINABILITY PREDICTION
24 May 1966

1. This maintainability handbook was developed by the Department of Defense in accordance with established procedure.

2. This publication was approved on 24 May 1966 for printing and inclusion in the military standardization handbook series.

3. This document provides information on current maintainability prediction procedures. It will provide valuable information and guidance to personnel concerned with the design, development, and production of equipment and systems requiring a high order of maintainability.

4. Every effort has been made to reflect the latest information on maintainability prediction procedures. It is the intent to review this handbook periodically to insure its completeness and currency. Users of this document are encouraged to report any errors discovered and any recommendations for changes or inclusions to the Commander, Naval Air Systems Command, Department of the Navy, Washington, D. C. 20360.

Source: https://assist.dla.mil -- Downloaded: 2017-02-16T09:13Z
Check the source to verify that this is the current version before use.

FOREWORD

The purpose of this Maintainability Prediction Handbook is to familiarize project managers and design engineers with current maintainability prediction procedures. To achieve this objective, particular care has been exercised in selecting and including only those procedures which are currently used in predicting the maintainability of equipment and systems. The highlights of each maintainability prediction procedure are presented in a clear, lucid and intelligible manner and include useful supplementary information applicable to specific procedures, using the following format.

1.0 GENERAL

Philosophy, Assumptions and Summary

Applicability

Point of Application

Basic Parameters of Measure

Information Required

Data Basis

Correlation Between Predicted and Observed Values

2.0 ANALYTIC FOUNDATION

3.0 APPLICATION

This type of presentation facilitates reference to all or to only those parts of a procedure which are of particular interest to the user. For example, the manager may be interested solely in the non-technical aspects, such as: Point of Application, or Applicability. Conversely, the engineer, may concentrate on the technical aspects only, such as Analytic Foundation and Application. Thus, through the use of this handbook, maintainability engineers, working with a new development, can select the most applicable maintainability prediction procedure for a specific equipment or system.

Source: https://assist.dla.mil -- Downloaded: 2017-02-16T09:13Z
Check the source to verify that this is the current version before use.

Prediction facilitates an early assessment of the maturity of the maintainability design and enables early decisions concerning the compatibility of a proposed design with specified requirements or the choice of better alternatives.

The maintainability prediction procedures I and III are applicable solely to electronic systems and equipments. Procedures II and IV can be used for all systems and equipments. In applying procedure II to non-electronic equipments the appropriate task times must be estimated.

In conclusion, the use of this handbook facilitates the design, development, and production of equipment and systems requiring a high order of maintainability.

Source: https://assist.dla.mil -- Downloaded: 2017-02-16T09:13Z
Check the source to verify that this is the current version before use.

TABLE OF CONTENTS

	Page
INTRODUCTION	
The Need for Maintainability Prediction	1
Definition of Maintainability	1
Basic Assumptions and Interpretations	2
Elements of Maintainability Prediction Techniques	2
Summary	3
MAINTAINABILITY PREDICTION PROCEDURES	
PROCEDURE I	1-1
SECTION 1.0 GENERAL	1-1
1.1 Philosophy, Assumptions and Summary	1-1
1.2 Applicability	1-2
1.3 Point of Application	1-2
1.4 Basic Parameters of Measure	1-2
1.5 Information Required	1-2
1.6 Data Basis	1-3
1.7 Correlation Between Predicted and Observed Values	1-4
SECTION 2.0 ANALYTIC FOUNDATION	1-4
2.1 Structure of Time Elements in "Fix" of Malfunction	1-4
2.2 Elemental Activities	1-12
2.2.1 Assumptions Relating to Elemental Activities	1-14
2.2.2 Major Characteristics of Elemental Activities	1-14
2.3 Synthesis of Time Distributions	1-16
2.3.1 Modes for Synthesizing Distributions of Time	1-16
2.3.2 Cumulative Time Distributions and the Monte Carlo Method	1-17
SECTION 3.0 APPLICATION	1-19
3.1 Preliminary Procedure	1-19
3.2 Steps of the Prediction Procedure	1-19

Source: https://assist.dla.mil -- Downloaded: 2017-02-16T09:13Z
Check the source to verify that this is the current version before use.

TABLE OF CONTENTS (Continued)

	Page
ADDENDUM A CALCULATION OF THE PROBABILITIES OF OCCURRENCE OF ELEMENTAL ACTIVITIES	A1-37
ADDENDUM B DEFINITIONS OF MAINTAINABILITY TERMS	A1-44
PROCEDURE II	2-1
SECTION 1.0 GENERAL	2-1
1.1 Philosophy, Assumptions and Summary	2-2
1.2 Applicability	2-3
1.3 Point of Application	2-3
1.4 Basic Parameters of Measure	2-3
1.4.1 Corrective Maintenance (Part A)	2-3
1.4.2 Corrective Maintenance (Part B)	2-5
1.4.3 Preventive Maintenance (Part B)	2-5
1.4.4 Active Maintenance (Part B)	2-5
1.4.5 Maintainability Index (MI)	2-6
1.5 Information Required to Apply This Procedure	2-6
1.6 Data Basis	2-7
1.7 Correlation Between Predicted and Observed Values	2-7
SECTION 2.0 ANALYTIC FOUNDATION	2-8
2.1 Basic Considerations and Definitions	2-8
2.1.1 Applicable Maintenance Tasks	2-8
2.1.2 Applicable Functional Levels	2-9
2.1.3 Replaceable Item	2-10
2.2 Principles of the Maintainability Prediction Procedure	2-10
SECTION 3.0 APPLICATION	2-11
3.1 PART A Corrective Maintenance Prediction Procedure	2-11
3.1.1 Maintainability Prediction During Final Design Stage	2-12
3.1.1.1 Prediction Procedure	2-12
3.1.1.2 Determining Functional Levels of the Equipment or System	2-12
3.1.1.3 Determining Functional Levels at which Maintenance Features are Effective	2-14

Source: https://assist.dla.mil -- Downloaded: 2017-02-16T09:13Z
Check the source to verify that this is the current version before use.

TABLE OF CONTENTS (Continued)

	Page
3.1.1.4 Prediction	2-15
3.1.1.5 Obtaining Predicted Maintainability Parameters	2-26
3.1.1.6 Calculations	2-26
3.2 PART B Active Maintenance Prediction Procedure	2-27
3.2.1 Corrective Maintenance Prediction	2-27
3.2.2 Preventive Maintenance Prediction	2-29
PROCEDURE III	3-1
SECTION 1.0 GENERAL	3-1
1.1 Philosophy, Assumptions and Summary	3-1
1.2 Applicability	3-2
1.3 Point of Application	3-2
1.4 Basic Parameters of Measure	3-2
1.4.1 Preventive Maintenance	3-3
1.4.2 Corrective Maintenance	3-3
1.5 Information Required	3-3
1.6 Data Basis	3-3
1.7 Correlation Between Predicted and Observed Values	3-4
SECTION 2.0 ANALYTIC FOUNDATION	3-5
2.1 Determination of Sample Size N	3-5
2.2 Derivation of Equation for Sample Size N	3-6
2.3 Task Sample	3-9
2.3.1 Task Sampling	3-9
2.3.2 Task Sample Selection Technique	3-11
2.4 Application of Check Lists	3-11
2.5 Linear Regression Equation for Downtime	3-12
2.6 Mathematical Relationships of Maintenance Times	3-12
SECTION 3.0 APPLICATION	3-14
3.1 General Approach	3-14
3.1.1 Determination of Sample Size	3-14
3.1.2 Step-by-Step Procedure for Calculating Sample Size	3-14

Source: https://assist.dla.mil -- Downloaded: 2017-02-16T09:13Z
Check the source to verify that this is the current version before use.

TABLE OF CONTENTS (Continued)

	Page
3.2 Step-by-Step Procedure for Calculating Task Sample	3-16
3.3 Step-by-Step Procedure for Performing Task Prediction	3-18
3.4 Calculation of Maintenance Indices	3-30
ADDENDUM A DESIGN CHECK LISTS AND SCORING CRITERIA	A3-33
CHECK LIST A - SCORING PHYSICAL DESIGN FACTORS	A3-33
CHECK LIST B - SCORING DESIGN DICTATES-FACILITIES	A3-47
CHECK LIST C - SCORING DESIGN DICTATES-MAINTENANCE SKILLS	A3-52
PROCEDURE IV	4-1
SECTION 1.0 GENERAL	4-1
1.1 Philosophy, Assumptions and Summary	4-1
1.2 Applicability	4-2
1.3 Point of Application	4-2
1.4 Basic Parameters of Measurement	4-2
1.5 Information Required	4-2
1.6 Data Basis	4-3
1.7 Correlation Between Predicted and Observed Values	4-3
SECTION 2.0 ANALYTIC FOUNDATION	4-3
2.1 General	4-3
2.2 Theoretical Considerations	4-7
2.2.1 End Item Identification	4-7
2.2.2 Operational Function	4-7
2.2.3 Corrective Maintenance Action Definition	4-7
2.2.4 Malfunction Detection Analysis	4-8
2.2.5 Preventive Maintenance Task Time Analysis	4-8
2.2.6 Corrective Maintenance Task Time Analysis	4-9
2.2.7 Total Maintenance Task Time Analysis	4-12
SECTION 3.0 APPLICATION	4-14
BIBLIOGRAPHY	5-1

Source: https://assist.dla.mil -- Downloaded: 2017-02-16T09:13Z
Check the source to verify that this is the current version before use.

LIST OF ILLUSTRATIONS

Table	Table Heading	Page
1-1	List of Categories and Elemental Activities of Active Repair Time	1-13
1-2	Fitted Distributions for Completion Times for Elemental Activities	1-15
1-3	Synthesis of Time Distributions	1-20
1-4	Parameters of Distributions of Elemental Activities	1-24
1-5	Proposed Format for Determining the Cumulative Time Distribution	1-27
1-6	Probability of Completing Elemental Activity of Final Malfunction Test by Designated Time	1-28
1-7	Combining Matrix for Active Repair Time Synthesis	1-30
1-8	Observed Distributions of System Final Test Time and System Logistic Time	1-32
1-9	Combining Matrix for System Down Time Synthesis	1-34
1-10	Occurrence Probability Functions for the Elemental Activities	A1-38
1-11	System Readouts	A1-43
2-1	Average Parts Failures per Part per 10^6 Hours by Part Category	2-18
2-2	Maintenance Task Times	2-20
2-3	Interchange Time	2-23
2-4	Element Times Based on the Work Factor System	2-24
2-5	An Example of the Use of Element Times for Determining Interchange Time	2-25
3-1	Part Class Failure Distribution and Sample Size	3-17
3-2	Task Prediction, R-7801	3-23
3-3	Maintenance Analysis, R-7801/FPS-20	3-24

Source: https://assist.dla.mil -- Downloaded: 2017-02-16T09:13Z
Check the source to verify that this is the current version before use.

LIST OF ILLUSTRATIONS

Figure	Figure Heading	Page
A	Comparison Matrix of Maintainability Prediction Procedures	4
1-1	Distribution of Malfunction Active Repair Time for the AN/ASB-4	1-5
1-2	Distribution of System Down Time for the AN/ASB 4	1-6
1-3	Distribution of Malfunction Active Repair Time for the AN/ARC-34	1-7
1-4	Distribution of System Down Time for the AN/ARC-34	1-8
1-5	Distribution of Malfunction Active Repair Time for the MD-1	1-9
1-6	Distribution of System Down Time for the MD-1	1-10
1-7	Structure of Time Elements in "Fix" of Malfunction	1-11
1-8	Distributions of Times Required to Perform Repair Actions	1-18
1-9	Resultants Synthesized From t_a, t_b and t_c	1-18
1-10	Probability of Occurrence of System Logistic Time	1-33
2-1	Functional Level Diagram of a Typical Communications System	2-13
2-2	Worksheet for Final Design Maintainability Prediction	2-16
2-3	Worksheet A	2-32
2-4	Worksheet B	2-33
2-5	Worksheet C	2-34
2-6	Worksheet D	2-35
3-1	Comparison of Population and Sampling Mean Distributions	3-8
3-2	Sample Size Nomograph	3-10
3-3	Maintainability Prediction Form	3-19
3-4	Maintenance Analysis Continuation Sheet	3-20
3-5	Maintenance Diagram AN/GRT-3	3-21
3-6	AN/FPS-20, Transmitting System	3-26
3-7	Amplifier-Mixer, AM-1347/FPS-20	3-27
3-8	Expanded View, Plate Power Supply	3-28
3-9	Plate Supply, Block Diagram	3-29
3-10	Nomograph - Downtime	3-32
4-1	Procedural Flow Block Diagram	4-6
4-2	Related Constraint Matrix	4-14
4-3	End Item/Corrective Maintenance Action Matrix	4-15
4-4	End Item/Preventive Maintenance Action Matrix	4-16
4-5	End Item/Operational Functional Matrix	4-17

Source: https://assist.dla.mil -- Downloaded: 2017-02-16T09:13Z
Check the source to verify that this is the current version before use.

Source: https://assist.dla.mil -- Downloaded: 2017-02-16T09:13Z
Check the source to verify that this is the current version before use.

INTRODUCTION

MAINTAINABILITY PREDICTION

THE NEED FOR MAINTAINABILITY PREDICTION: The prediction of the expected number of hours that a system or device will be in an inoperative or "down state" while it is undergoing maintenance is of vital importance to the user because of the adverse effect that excessive downtime has on mission success. Therefore, once the operational requirements of a system are fixed, it is imperative that a technique be utilized to predict its maintainability in quantitative terms as early as possible during the design phase. This prediction should be updated continuously as the design progresses to assure a high probability of compliance with specified requirements.

A significant advantage of using a maintainability prediction procedure is that it highlights for the designer, those areas of poor maintainability which justify product improvement, modification, or a change of design. Another useful feature of maintainability prediction is that it permits the user to make an early assessment of whether the predicted downtime, the quality, quantity of personnel, tools and test equipment are adequate and consistent with the needs of system operational requirements.

DEFINITION OF MAINTAINABILITY: MIL-STD-778 defines maintainability as follows:

> "Maintainability is a characteristic of design and installation which is expressed as the probability that an item will conform to specified conditions within a given period of time when maintenance action is performed in accordance with prescribed procedures and resources".

This definition has fostered the development of many maintainability prediction procedures for providing an assessment of system maintainability. Each of these uses various quantitative measures to indicate system maintainability. However, all of these measures have a specific relationship to, or constitute some element of the distribution of total system downtime. Hence, if a universal method or technique can be developed to determine the "Total System Downtime Distribution" for any type of system, this would facilitate calculating the measures of maintainability currently in use.

Source: https://assist.dla.mil -- Downloaded: 2017-02-16T09:13Z
Check the source to verify that this is the current version before use.

BASIC ASSUMPTIONS AND INTERPRETATIONS: Each maintainability prediction procedure included in this handbook depends upon the use of recorded reliability and maintainability data and experience which have been obtained from comparable systems and components under similar conditions of use and operation. It is also customary to assume the applicability of the "principle of transferability." This assumes that data which accumulate from one system can be used to predict the maintainability of a comparable system which is undergoing, design, development, or study. This procedure is justifiable when the required degree of commonality between systems can be established. Usually during the early design phase of the life cycle, commonality can only be inferred on a broad basis. However, as the design becomes refined, during later phases of the life cycle, commonality is extendable if a high positive correlation is established relating to equipment functions, to maintenance task times, and to levels of maintenance. Although the four techniques contained in this handbook have been proposed and appear to fit certain applications, it should be borne in mind that they have not truly been tested for generality, for consistency one to another, or for most other criteria dealing with broad applicability. It should also be borne in mind, though, that experience has shown that the advantages greatly outweigh the burden of making a prediction. For that reason, it is not the purpose of this document to deter further research or inquiry.

ELEMENTS OF MAINTAINABILITY PREDICTION TECHNIQUES: Each maintainability prediction technique utilizes procedures which are specifically designed to satisfy its method of application. However, all maintainability prediction methods are dependent upon at least two basic parameters:

(a) Failure rates of components at the specific assembly level of interest.

(b) Repair time required at the maintenance level involved.

There are many sources which record the failure rate of parts as a function of use and environment. This failure rate, is expressed as the number of failures per unit of time. A typical measure is "failures per 10^6 hours." The major advantage of using the failure rate in maintainability prediction calculations is that it provides an estimate of the relative frequency of failure of those components which are utilized in the design. Similarly, the relative frequency of failure of components at other maintainable levels can be determined by employing standard reliability prediction techniques using parts failure rates. Failure rates can also be utilized in applicable regression equations for calculating the maintenance action time. Another use of the failure rate is to weight the repair times for various categories of repair activity, in order to provide an estimate of its contribution, to the total maintenance time.

Source: https://assist.dla.mil -- Downloaded: 2017-02-16T09:13Z
Check the source to verify that this is the current version before use.

Repair times are determined from prior experience, simulation of repair tasks, or past data secured from similar applications. Most procedures break up the "maintenance action", which is a more general expression than "repair action", into a number of basic maintenance tasks whose time of performance is summed to obtain the total time for the maintenance action.

SUMMARY: It is emphasized that the selection and application of the proper maintainability technique results in many economies measured in terms of man-hours, materiel, and money. These savings are attributable to the fact that maintainability prediction is considered to be a tool for design enhancement because it provides for the early recognition and elimination of areas of poor maintainability during the early stages of the design life cycle. Otherwise, areas of poor maintainability would only become apparent during demonstration testing or actual use, after which time, correction of design deficiencies would be costly and unduly delay schedules and missions.

Maintainability prediction, therefore, is a most useful instrument to both manager and engineer because it provides for improved system effectiveness and reduces administrative and maintenance costs.

The comparison matrix, Figure A, is included to provide a summary of the significant attributes of each maintainability prediction procedure included in this handbook. Additional details may be obtained by referring to specific maintainability prediction procedures of interest.

Source: https://assist.dla.mil -- Downloaded: 2017-02-16T09:13Z
Check the source to verify that this is the current version before use.

Procedure	Applicability	Point of Application	Basic Parameters Of Measure	Information Required	Correlation	Caution
I	To predict flight-line maintenance of airborne electronic and electro-mechanical systems involving modular replacemen	After establishment of the design concept provided that data as listed in the column entitled "Information Required" is available.	Distribution of down-times for various Elemental Activities, Maintenance categories, Repair times, and System Down-time	(a)Location & failure rate of components (b)Number of 1. Replaceable components 2. Readouts 3. Spares 4. Test Points 5. Magnetrons (c)Duration of Average mission (d)Maintenance schedules etc.	See Figure 1-1 to 1-6 for correlation between the observed and predicted values of various maintainability parameters.	It may be necessary to identify additional elemental activities and derive their appropriate parameters for application to equipments other than those indicated under Applicability
II	To predict the maintainability of shipboard and shore electronic equipment and systems. It can also be used to predict the maintainability of mechanical systems provided that required task times and functional levels can be established.	Applicable during the final design stage	Part A of procedure Corrective maintenance expressed as an arithmetic or geometric mean time to repair in hours. Part B of procedure Active maintenance in terms of: (a)Mean corrective maintenance time in man-hours. (b)Mean preventive maintenance time in man-hours. (c)Mean active maintenance time in terms of mean man-hours per maintenance action.	For corrective maintenance (Part A) (a)Packaging to the extent that detailed hardware configurations can be established. (b)Diagnostic procedure. (c)Repair methods. (d)Parts listing. (e)Operating Stresses (f)Mounting methods (g)Functional levels at which alignment and checkout occur. For active maintenance (Part B) The respective maintenance task times for corrective and preventive maintenance must have been determined.	A validation study of the AN/URC-32 Transceiver and the AN/SRT-16 Transmitter, which were used on many ship types from destroyers to submarines, showed good correlation between predicted and observed corrective maintenance results.	The tabulated task times are not applicable to all types of equipments and situations. For a particular application, when the validity of the task times is in question, additional data sources may have to be used or estimates made by the analyst.
III	To predict the mean and maximum active corrective maintenance downtime for Air Force ground electronic systems and equipment. It may also be used to predict preventive maintenance time.	Applied during the Design Development and Control Stages.	(a)Mean and maximum active corrective downtime (95th percentile) (b)Mean and maximum preventive downtime (c)Mean downtime	The evaluator must have accessibility to and be familiar with at least the following (a)Schematic diagrams (b)Physical layouts (c)Functional operation (d)Tools and test equipment (e)Maintenance aids (f)Operational and Maintenance environment	Correlation between predicted and observed values can be good if (a)Adequate information is available (b)Experienced analysts are used to select maintenance tasks to be evaluated.	The scoring of the respective checklists must be performed by analysts who are well familiar with the equipment. It is reasonable to expect variation in the regression coefficients as maintenance situations and equipments change. The extent of this variation has not as yet been determined
IV	To predict the mean and/or total corrective and preventive maintenance downtime of systems and equipments.	Applicable throughout the design, development cycle with various degrees of detail.	(a)Mean system maintenance downtime. (b)Mean corrective maintenance downtime per operational period. (c)Total corrective maintenance downtime per operational period. (d)Total preventive maintenance downtime per operational period.	Complete system documentation portraying (a)Functional diagrams (b)Physical layouts (c)Front panel layouts (d)End item listings with failure rates	Among similar procedures correlation between predicted and observed values has been good.	Care must be exercised in the estimation of times where data is not available. Sufficient equipment disclosure must be available to establish reasonable estimates

Figure A. Comparison Matrix of Maintainability Prediction Procedures

Source: https://assist.dla.mil -- Downloaded: 2017-02-16T09:13Z
Check the source to verify that this is the current version before use.

PROCEDURE I

1.0 GENERAL

This procedure is used to predict system downtime of airborne electronic and electro-mechanical systems involving modular replacement at the flight-line.

Just as a masonry building depends upon the brick as its basic building block, the procedure relies on the "Elemental Activity" as the fundamental element of downtime from which other measures of downtime are developed through a process of synthesis of time distributions.

The Elemental Activity is a simple maintenance action of short duration and relatively small variance which does not vary appreciably from one system to another. An example of a basic elemental activity would be the opening and shutting of a door, or opening and closing of a radome on an aircraft. It should be obvious that the performance time does not depend upon the construction of the house or aircraft provided that the door or radome are similar. Therefore if one should record the times required over many trials, to open and close a door, he should be able to calculate the mean time, μ, and the standard deviation, σ, of this Elemental Activity. This is precisely what has been done in this prediction procedure for various Elemental Activities which in total comprise the basic Categories of Active Repair Time. These activities are listed in Table 1-1 and the corresponding recommended values of μ and σ for the Elemental Activities of each category are shown in Table 1-2.

The technique of using the basic building block, namely the Elemental Activity, and building the structure step by step to include other measures of downtime is explained in 2.0 "Analytic Foundation" and detailed in 3.0 "Application".

1.1 Philosophy, Assumptions and Summary

Figure 1-7 entitled "Structure of Time Elements in "Fix" of Malfunction" illustrates the "building block" principle. An examination of this figure shows how elemental activity times are synthesized to produce maintenance categories and that these in turn combine to produce Malfunction Active Repair Time. The remainder of this chart showing the complete buildup to total system downtime is self evident. There are two exceptions to be noted. The first is that the category entitled "Distribution of Final Test Time" is not derived from other Elemental Activities since it has constant parameters and is shown in Table 1-8. The second exception is that this procedure does not include the techniques for calculating Total System

Source: https://assist.dla.mil -- Downloaded: 2017-02-16T09:13Z
Check the source to verify that this is the current version before use.

Downtime but rather concludes with the determination of System Downtime. The reason is that Total System Downtime is the result of combining the distributions of System Downtime with Initial Delay. The methods of determining Initial Delay require some further refinement before they will be considered for inclusion.

In summary, the philosophy of the entire prediction procedure is based on the principles of synthesis and transferability. As already discussed the synthesis principle involves a buildup of downtimes, step by step, progressing from the distribution of downtimes of Elemental Activities through various stages culminating finally with the Distribution of System Downtime.

The transferability principle embodies the concept that data applicable to one type of system can be applied to similar systems under like conditions of use and environment to predict system maintainability.

1.2 Applicability

This maintainability prediction procedure is applicable to predict flight-line maintenance of airborne electronic and electro-mechanical systems involving modular replacement at the flight-line. The procedure may also be used for maintainability prediction in echelons of maintenance other than flight-line such as field or depot by extension of formulae through further developmental work, as required, to include other elemental activities.

1.3 Point of Application

The technique can be applied at any time after the design concept has been established, provided the essential data enumerated in 1.5 entitled "Information Required" is available.

1.4 Basic Parameters of Measure

The ultimate measure of maintainability is the distribution of System Downtime. Intermediate measures include the distribution of times for the various Elemental Activities, Maintenance Categories, Malfunction Active Repair Time, Malfunction Repair Time, System Repair Time and System Downtime. (See Figure 1-7.)

1.5 Information Required

In order to perform a maintainability prediction the following information must be available.

Source: https://assist.dla.mil -- Downloaded: 2017-02-16T09:13Z
Check the source to verify that this is the current version before use.

(a) Location and failure rate of each component of the system.

(b) Number of flight-line replaceable components of each type.

(c) List of flight-line replaceable components containing adjustments or flight-line replaceable parts.

(d) Number and character of readouts (Monitoring devices for portions of the system).

(e) Number of types of spares carried.

(f) Number of pressure-retaining connectors.

(g) Number of test points.

(h) Nature of special test equipment (designed specifically for the system).

(i) Number of magnetrons.

(j) Estimates of durations of average mission.

(k) Manning schedules for operations and maintenance personnel including all shifts and all breaks for lunch, coffee, etc.

(l) Estimates for intervals occupied by unscheduled activities such as debriefing.

1.6 Data Basis

In the original development of the prediction procedure, data were employed from malfunction repairs on the AN/ASB-4 Bombing and Navigation System (used in the B-52 bomber). In testing and refining the prediction system, data were used from seven other systems:

AN/APN - 89	AN/APX - 25
AN/ARC - 34	AN/ARN - 21
AN/ARC - 65	MD - 1
AN/AIC - 10	

Source: https://assist.dla.mil -- Downloaded: 2017-02-16T09:13Z
Check the source to verify that this is the current version before use.

Thus it is expected that this prediction procedure should be more adaptable to electronic or electro-mechanical systems similar to those mentioned above.

1.7 Correlation Between Predicted and Observed Values

Figures 1-1 to 1-6 show the correlation between observed and predicted values for the distribution of Malfunction Active Repair Time and System Downtime for various equipments.

2.0 ANALYTIC FOUNDATION

2.1 Structure of Time Elements in "Fix" of Malfunction

Using Figure 1-7 as a guide, it is evident that when the latter is viewed from right to left the following relationships become evident:

(a) Total System Downtime consists of: 1/

1. Initial Delay.
2. System Downtime.

(b) System Downtime comprises:

1. System Logistic Time.
2. System Repair Time.
3. System Final Test Time.

(c) System Repair Time is the product of Malfunction Repair Time and the number of malfunctions.

(d) Malfunction Repair Time consists of:

1. Malfunction Active Repair Time.
2. Malfunction Administrative Time.

1/The calculation of Total System Downtime is not shown in this procedure because it depends on the distribution of times of Initial Delay and the procedure requires more development.

Source: https://assist.dla.mil -- Downloaded: 2017-02-16T09:13Z
Check the source to verify that this is the current version before use.

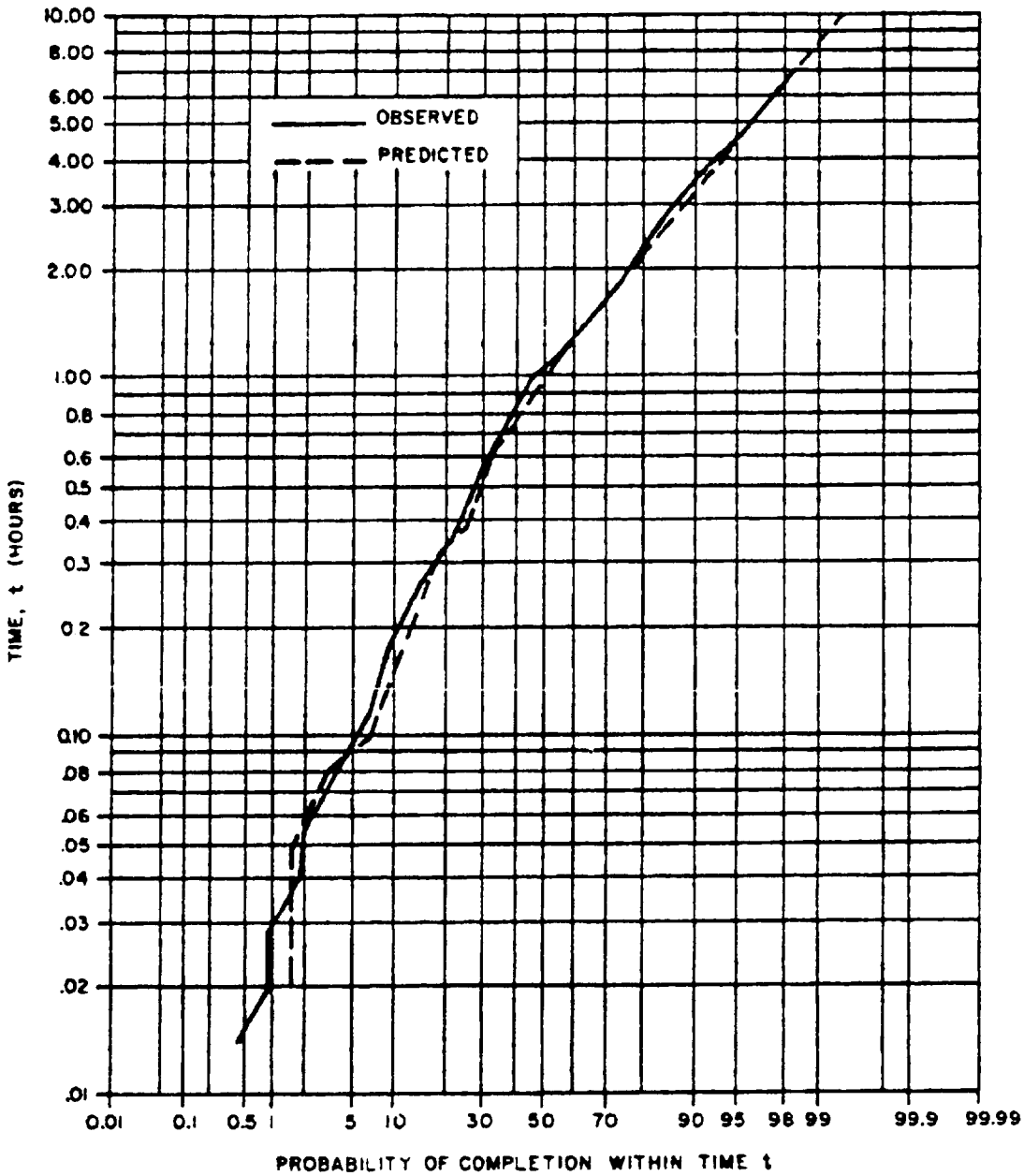

Figure 1-1. Distribution of Malfunction Active Repair Time for the AN/ASB-4

Source: https://assist.dla.mil -- Downloaded: 2017-02-16T09:13Z
Check the source to verify that this is the current version before use.

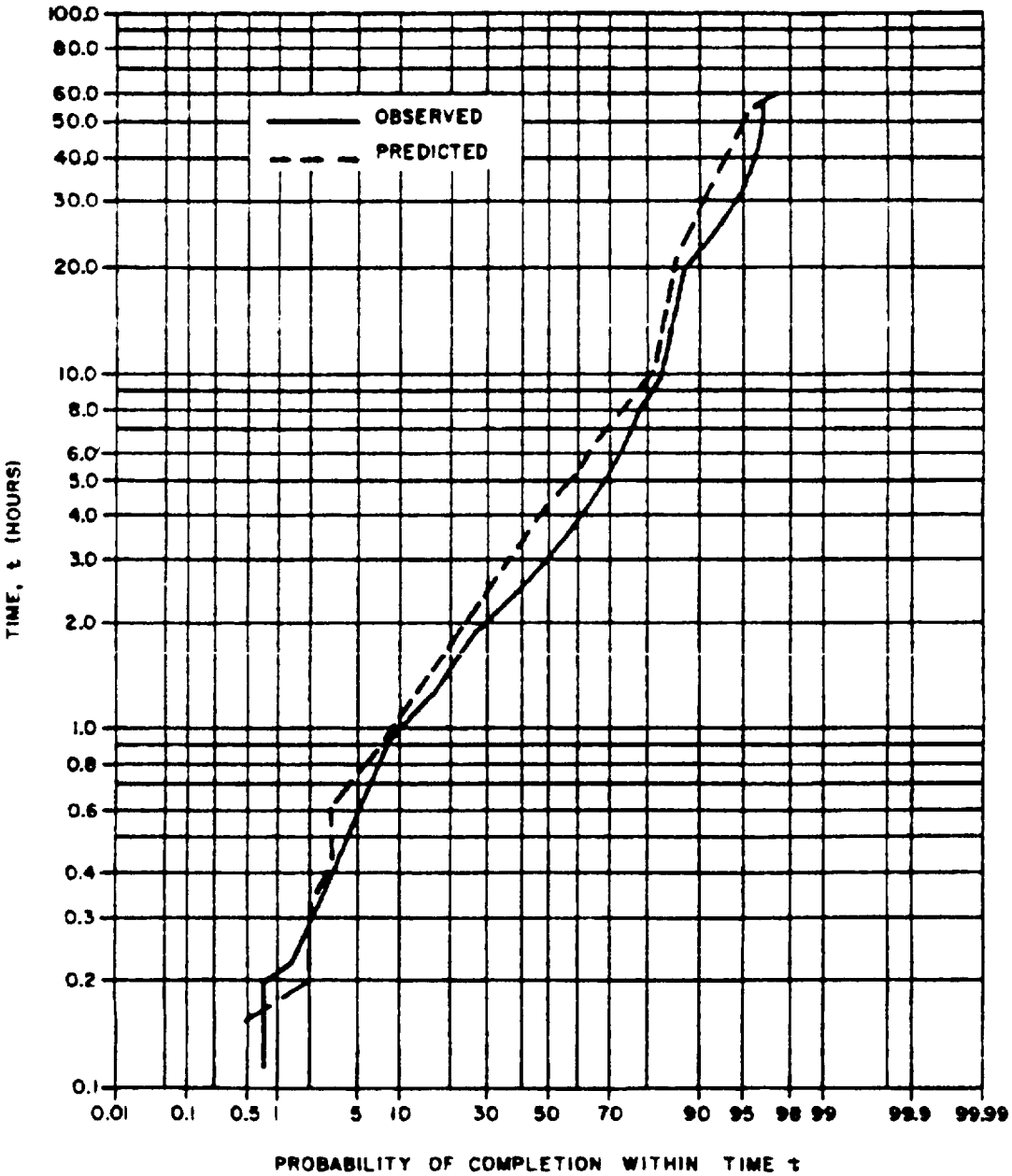

Figure 1-2. Distribution of System Down Time for the AN/ASB-4

Source: https://assist.dla.mil -- Downloaded: 2017-02-16T09:13Z
Check the source to verify that this is the current version before use.

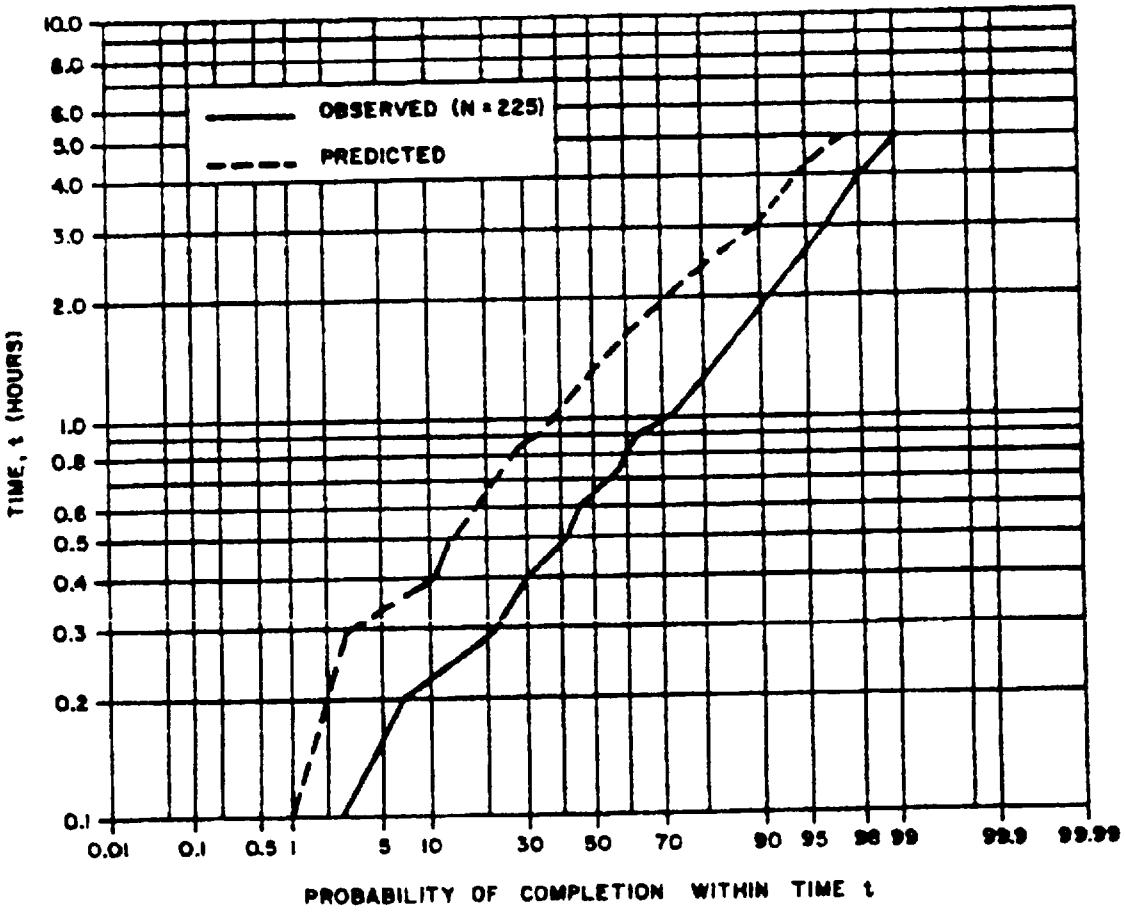

Figure 1-3. Distribution of Malfunction Active Repair Time for the AN/ARC-34

Source: https://assist.dla.mil -- Downloaded: 2017-02-16T09:13Z
Check the source to verify that this is the current version before use.

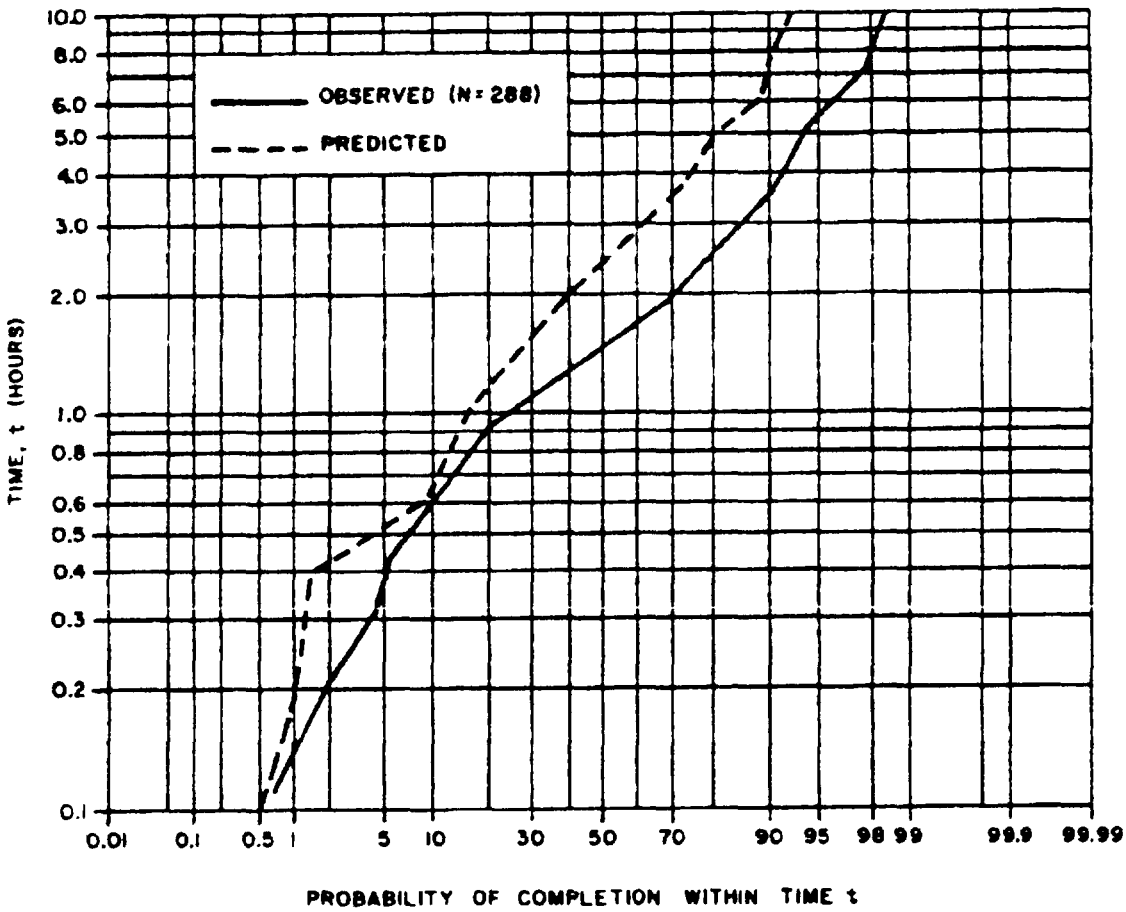

Figure 1-4. Distribution of System Down Time for the AN/ARC-34

Source: https://assist.dla.mil -- Downloaded: 2017-02-16T09:13Z
Check the source to verify that this is the current version before use.

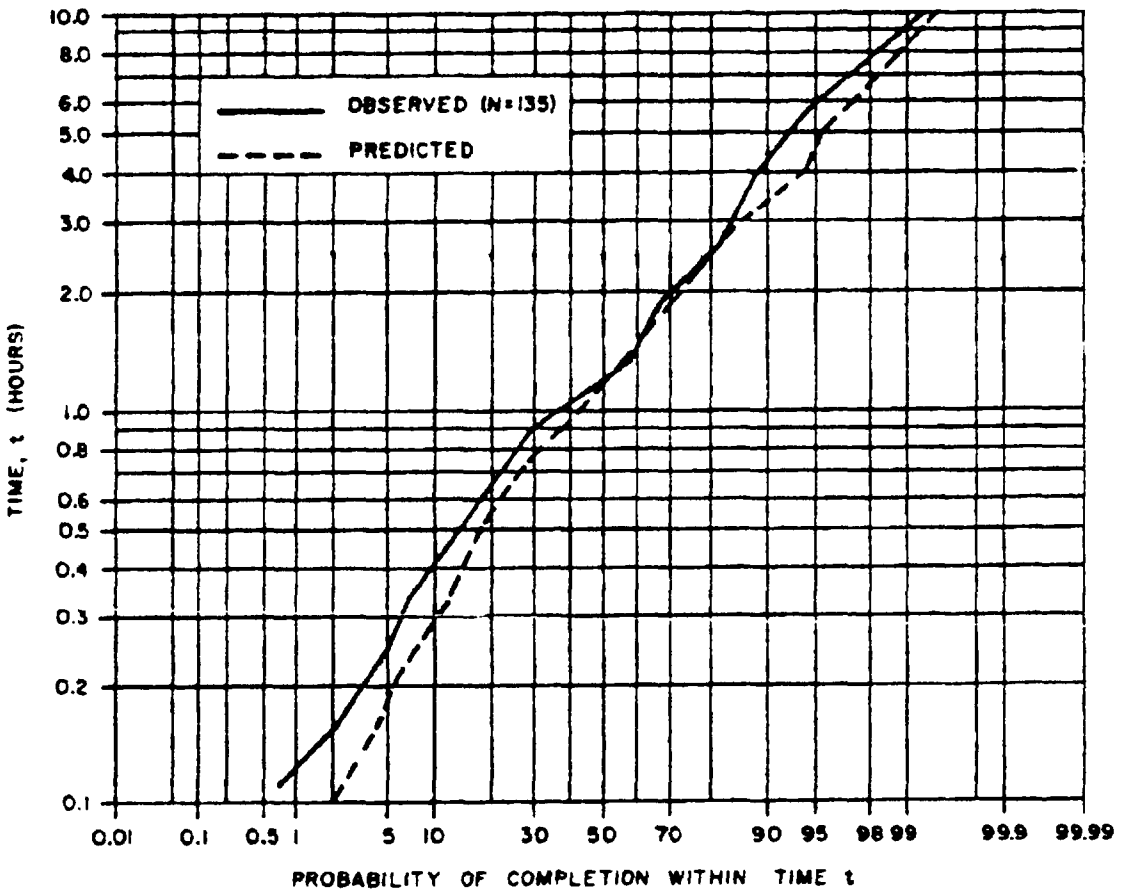

Figure 1-5. Distribution of Malfunction Active Repair Time for the MD-1

Source: https://assist.dla.mil -- Downloaded: 2017-02-16T09:13Z
Check the source to verify that this is the current version before use.

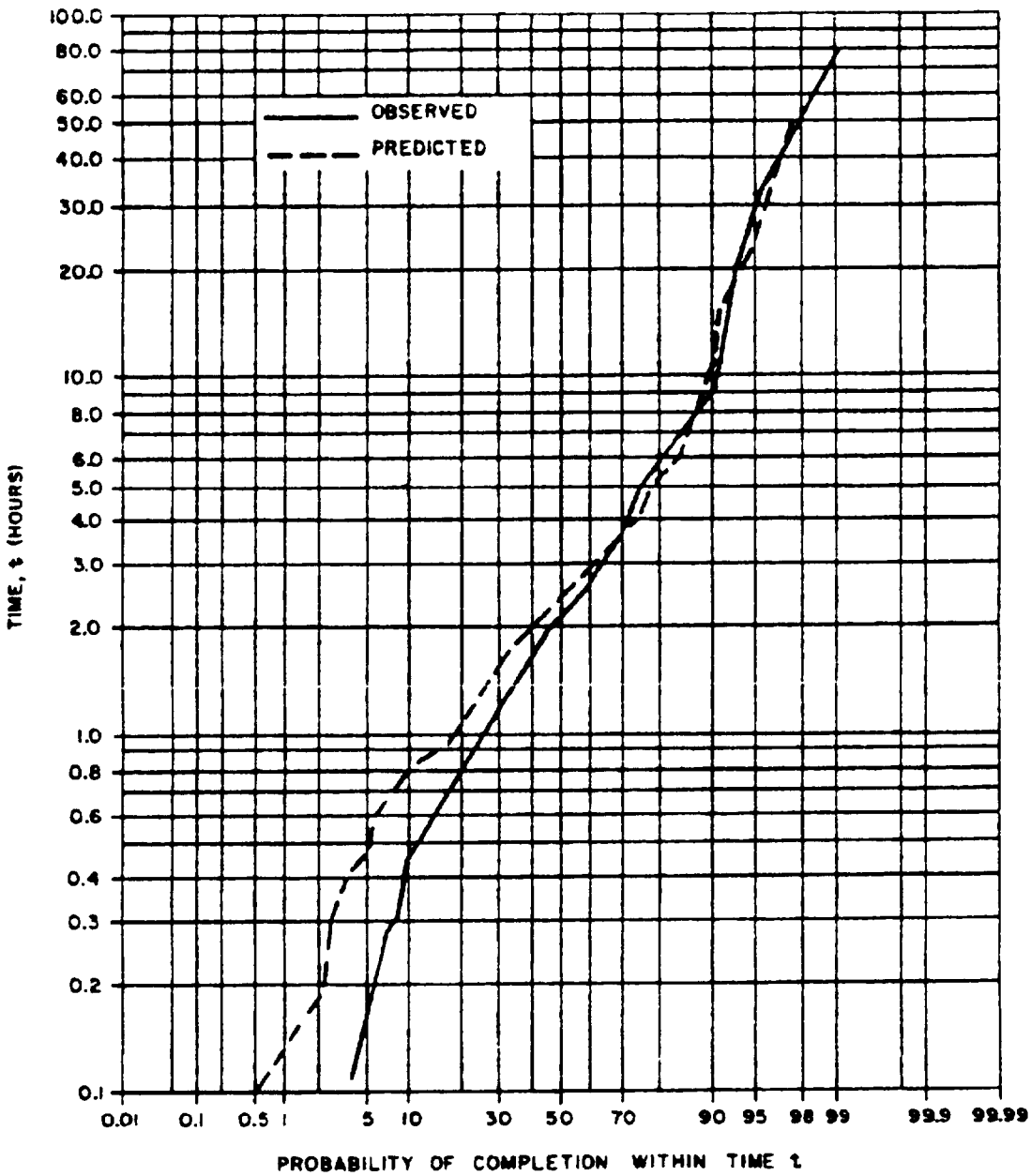

Figure 1-6. Distribution of System Down Time for the MD-1

Source: https://assist.dla.mil -- Downloaded: 2017-02-16T09:13Z
Check the source to verify that this is the current version before use.

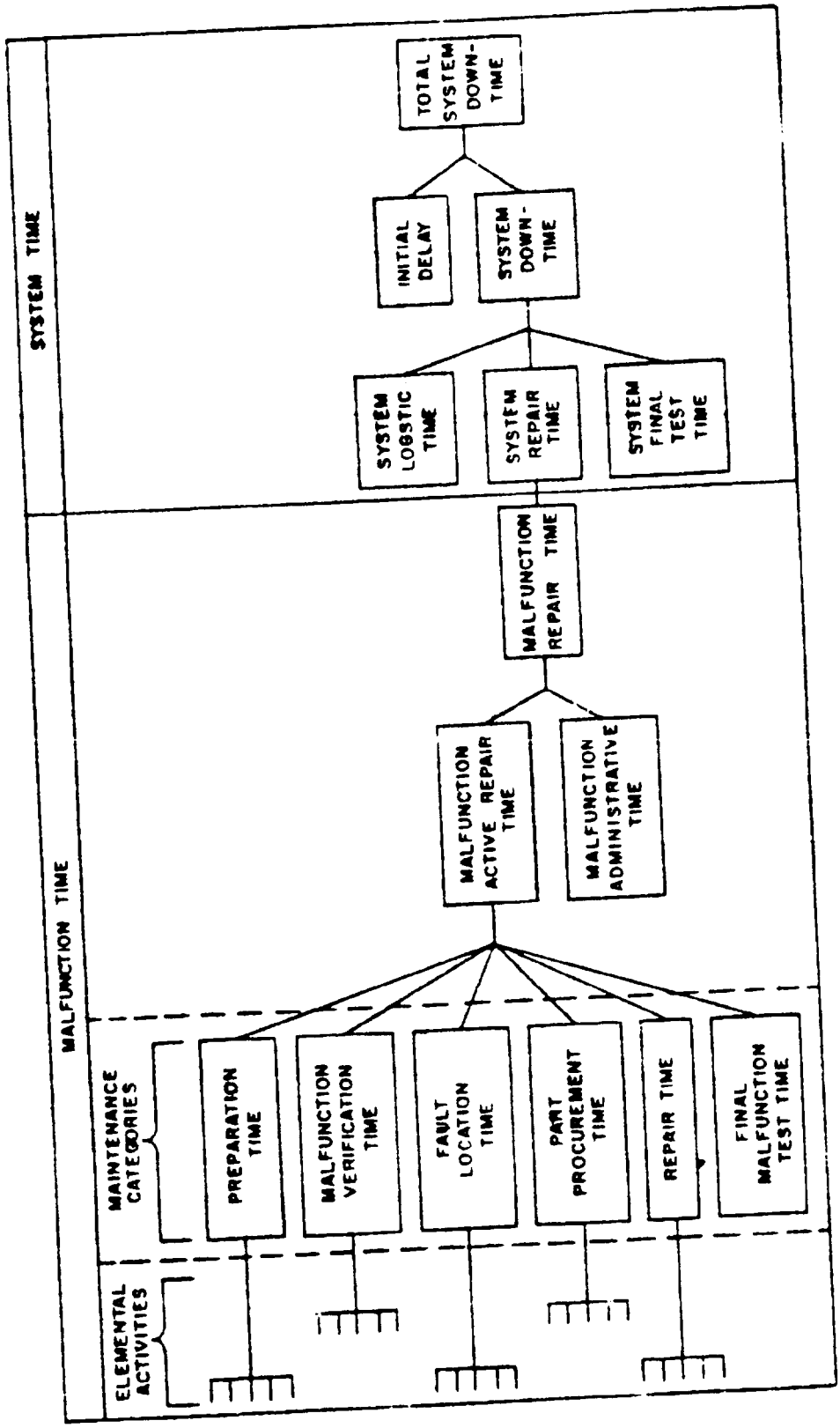

Figure 1-7. Structure of Time Elements in "Fix" of Malfunction

Source: https://assist.dla.mil -- Downloaded: 2017-02-16T09:13Z
Check the source to verify that this is the current version before use.

(e) Malfunction Active Repair Time is comprised of:

1. Preparation Time.
2. Malfunction Verification Time.
3. Fault Location Time.
4. Part Procurement Time.
5. Repair Time.
6. Final Malfunction Test Time.

(f) Elemental Activities: Each of the maintenance categories of (e) above consists of a series of Elemental Activities, as shown in Table 1-1 and discussed in 2.2.

2.2 Elemental Activities

To facilitate analysis and minimize variations in the performance time required, each malfunction maintenance category is subdivided into smaller maintenance actions, labelled "Elemental Activities". As discussed in 1.0 these represent relatively simple and brief maintenance actions, which require a short time to perform. Therefore, in the prediction procedure as originally developed, the assumption was that Elemental Activities were normally distributed. However, after further refinement of the procedure three optional distributions are available for use in a prediction as follows: (See Table 1-2.)

(a) The fitted normal distribution.

(b) The fitted log-normal distribution.

(c) A corrected time log-normal distribution.

The determination of which Elemental Activities are normally distributed, and which log normally, is based on the hypothesis that Elemental Activities having standard deviations less than an arithmetic mean of one hour, are representative of activities of a routine nature and are assumed to be normally distributed. This is due to the fact that execution time is not significantly influenced by changes of personnel, characteristics or surrounding events.

On the other hand, Elemental Activities having standard deviations greater than the arithmetic mean, or an arithmetic mean greater than one hour, are considered both as more complex and as containing many possible subactivities, all of which may not need to be performed to define the activity. In such a case

Source: https://assist.dla.mil -- Downloaded: 2017-02-16T09:13Z
Check the source to verify that this is the current version before use.

TABLE 1-1

LIST OF CATEGORIES AND ELEMENTAL ACTIVITIES OF ACTIVE REPAIR TIME

Category	Elemental Activity	Activity No.
Preparation	System turn-on, warm-up, setting dials and counters as necessary.	1
	Activity #1 plus time awaiting particular component stabilization.	2
	Opening and closing radome.	3
	Gaining access and reinstalling covers (other than radome).	4
	Obtaining test equipment and or Tech Orders.	5
	Checking maintenance records.	6
	Procuring components in anticipation of need.	7
	Setting up test equipment.	8
Malfunction verification	Observing indications only.	1
	Using test equipment to verify malfunctions inherently not reproducible on ground.	2
	Performing standard test problems or checks	3
	Testing for pressure leaks	4
	Attempting to observe elusive or non-existent symptom(s).	5
	Using special test equipment designed specifically for this equipment.	6
	Making a visual integrity check.	7
Fault Location	Fault self-evident from symptom observation.	1
	Interpreting symptoms by mental analysis only (from knowledge/experience).	2
	Interpreting displays at different settings of controls.	3
	Interpreting meter readings.	4
	Removing unit(s)/subunit(s) and checking in shop.	5
	Switching and/or substituting unit(s)/subunit(s).	6
	Switching and/or substituting part(s).	7
	Removing and checking parts.	8
	Making a visual integrity check.	9
	Checking voltages, continuity, waveforms and/or signal tracing.	10
	Consulting Tech Orders.	11
	Conferring with Tech Reps or other maintenance personnel.	12
	Performing standard test problem(s).	13
	Isolating pressure leak.	14
	Using special test equipment designed specifically for this equipment.	15
Part Procurement	Obtaining replacement component from aircraft spares or tool box.	1
	Obtaining replacement(s) from bench, shop, or pre-issue stock.	2
	Obtaining replacement component(s) by cannibalization.	3
	Attempting to obtain replacement component(s). Unavailable.	4
Repair	Replacing unit(s)/subunit(s).	1
	Replacing parts.	2
	Correcting improper installation or defective plug-in connection(s).	3
	Making adjustments in aircraft.	4
	Making adjustments in shop.	5
	Baking magnetron.	6
	Precautionary repair activity (includes so-called fault location, part procurement, and repair times spent when symptom not verified).	7
	Repairing wiring or connections.	8
Final Malfunction Test	Function checkout following completion of repair.	1

Source: https://assist.dla.mil -- Downloaded: 2017-02-16T09:13Z
Check the source to verify that this is the current version before use.

the tendency is for the applicable distribution to be skewed to the right and is assumed to have log normally distributed completion times.

Table 1-2 shows fitted distributions of completion times for Elemental Activities. It is recommended that the distribution parameters shown in this table, which are denoted by an asterisk, be used in any prediction. Predictions based on these distributions yield the best empirical fit to reported maintenance time. In those cases when a prediction of true time, rather than the time reported by repair personnel, is desired, the distribution of corrected time is used. (See columns 7 & 8 of Table 1-2.)

2.2.1 Assumptions Relating to Elemental Activities

The selection and phrasing of Elemental Activities is based on the following assumptions:

(a) The mean time required for the performance of an Elemental Activity is independent of system design and support facilities.

(b) The frequency of occurrence of an Elemental Activity correlates with some factor of system design or support facilities.

(c) The Elemental Activities in any maintenance category are independent of each other.

(d) The total time required in any maintenance category is completely accounted for by one or more of the Elemental Activities in the category.

2.2.2 Major Characteristics of Elemental Activities

Two of the characteristics of Elemental Activities are of major concern. These are the probability of occurrence and the distribution of time required to complete an Elemental Activity. Studies indicate that the distribution of the time required for the performance of an Elemental Activity is independent of the type and design of the system involved. For example, large differences would not be expected between the times required to open and close a radome on two types of aircraft, or the times required to make a simple electrical adjustment since these do not depend on the design characteristics of the aircraft. On the other hand, the probability of occurrence of an Elemental Activity does correlate to some factor of system design or support facilities.

Source: https://assist.dla.mil -- Downloaded: 2017-02-16T09:13Z
Check the source to verify that this is the current version before use.

TABLE 1-2

FITTED DISTRIBUTIONS FOR COMPLETION TIMES FOR ELEMENTAL ACTIVITIES

1	2	3	4	5	6	7	8
Category	Elemental Activity Number	Distribution 1 Fitted Normal		Distribution 2 Fitted Log Normal		Distribution 3 "Corrected Time"* (Log Normal)	
		μ	σ	μ	σ	μ	σ
Preparation	1	0.102*	0.068*	0.085	0.606	0.082	0.643
	2	0.665*	0.384*	0.576	0.536	0.556	0.643
	3	0.235*	0.135*	0.204	0.534	0.198	0.643
	4	0.275*	0.196*	0.215	0.657	0.200	0.643
	5	0.330	0.448	0.195*	1.023*	0.190	1.011
	6	0.140*	0.104*	0.112	0.663	0.109	0.643
	7	0.070*	0.050*	0.060	0.543	0.058	0.643
	8	0.107	0.127	0.069*	0.938*	0.068	1.011
Malfunction Verification	1	0.105	0.263	0.039*	1.409*	0.038	1.011
	2	0.593*	0.416*	0.485	0.633	0.469	0.643
	3	0.397	0.435	0.268*	0.888*	0.260	1.011
	4	0.329	0.605	0.157*	1.215*	0.153	1.011
	5	1.394	1.236	1.043*	1.036*	1.019	1.011
	6	0.308*	0.171*	0.269	0.528	0.261	0.643
	7	0.059	0.133	0.024	1.345*	0.023	1.011
Fault Location	1	0.010*	0.001*	0.010	0.100	0.010	0
	2	0.019	0.040	0.008*	1.301*	0.008	1.011
	3	0.333*	0.259*	0.263	0.688	0.256	0.643
	4	0.141	0.172	0.089*	0.955*	0.086	1.011
	5	0.821*	0.788*	0.592	0.808	0.572	1.011
	6	0.324	0.346	0.221*	0.872*	0.216	1.011
	7	0.436	0.480	0.293*	0.891*	0.284	1.011
	8	0.181	0.191	0.125*	0.865*	0.122	1.011
	9	0.140	0.213	0.077*	1.095*	0.074	1.011
	10	0.807	1.000	0.507*	0.965*	0.491	1.011
	11	0.344	0.351	0.240*	0.844*	0.233	1.011
	12	0.466*	0.430*	0.342	0.785	0.333	0.643
	13	0.582*	0.[illegible]	0.426	0.789	0.413	0.643
	14	0.683	0.960	0.396*	1.044*	0.384	1.011
	15	0.320*	0.162*	0.285	0.477*	0.277	0.643
Part Procurement	1	0.022	0.030	0.012*	1.086*	0.012	1.011
	2	0.313*	0.238*	0.249	0.675	0.242	0.643
	3	0.315*	0.171*	0.277	0.508	0.269	0.643
	4	0.139*	0.144*	0.161	0.649	0.157	0.643
Repair	1	0.394	0.518	0.239*	1.002*	0.231	1.011
	2	0.3[illegible]	0.503	0.203*	1.122*	0.198	1.011
	3	0.056*	0.055*	0.051	0.726	0.049	0.643
	4	0.415	0.541	0.253*	0.997*	0.246	1.011
	5	0.993*	0.862*	0.750	0.749	0.724	0.643
	6	1.416	0.701	1.269*	0.468*	1.238	0.643
	7	0.752*	0.747*	0.534	0.829	0.515	1.011
	8	0.810	1.114	0.476*	1.030*	0.461	1.011

* Where it has been possible to compare the statistical adequacy of the fitted normal and log normal distributions, the distribution which fitted best has been marked with an asterisk.

Source: https://assist.dla.mil -- Downloaded: 2017-02-16T09:13Z
Check the source to verify that this is the current version before use.

For a majority of the Elemental Activities, the probability of occurrence, p, is predicted for a particular system by solving an equation generated by a multiple-linear regression analysis. Table 1-10 lists the occurrence probability function, p, for a number of Elemental Activities. In these equations, the dependent variables are based on observations of comparable systems, and the independent variables are certain quantitative characteristics.

The occurrence of multiple Elemental Activities is a function of the probabilities of the Constituent Activities; thus, the probability of conjunctive occurrence of two independent activities is the product of the individual probabilities multiplied by the probability of non-occurrence of all the remaining activities. For three independent activities (A, B and C), the probability of joint occurrence of any two such as A and B and a non-occurrence of the third C would be:

$$P(A, B, \bar{C}) = P(A) \cdot P(B) \cdot \left[1 - P(c)\right]$$

In this type of notation the bar over a letter indicates the probability of "non-occurrence" and a plain capital letter is the probability of occurrence.

2.3 Synthesis of Time Distributions

There are several techniques which are used in this procedure to synthesize time distributions. For the most part these depend upon the use of Monte Carlo techniques which simulate actual conditions by selecting random samples from cumulative time distributions of applicable parameters. The various techniques which are used for combining or synthesizing distributions of time are explained in 2.3.1. The details of the specific methods of developing cumulative time distributions and utilizing Monte Carlo methods are discussed in 2.3.2 and illustrated under 3.0 "Application". A summary is also included in Table 1-3.

2.3.1 Modes for Synthesizing Distributions of Time

There are four synthesis modes, depending on the manner in which a system can fail. These are described as:

(a) Equal Sampling, Adding Variates: When one of the components fails during a time interval and all other possible failures occur during this same period. All repair actions are performed. (Mode 1, Figure 1-9.)

Source: https://assist.dla.mil -- Downloaded: 2017-02-16T09:13Z
Check the source to verify that this is the current version before use.

(b) Unequal Sampling, Adding Variates: This applies when only one failure occurs and the others will probably occur at a rate corresponding to their occurrence probabilities (the relative frequency, determined from failure rate data). In this case, various combinations of the repair action will take place. (Mode 2, Figure 1-9.)

(c) Equal Sampling, Not Adding Variates: This applies when only one failure can occur at a time and each component has an equal probability of failure. Only one of the repair actions is possible to correct system failure. (Mode 3, Figure 1-9.)

(d) Unequal Sampling, Not Adding Variates: This is applicable when only one of the components can fail at a time, in the order of their relative probability of failure. The repair consists of performing only one repair action at a time, since failures will probably occur one at a time, in accordance with the relative frequency. (Mode 4, Figure 1-9.)

Figures 1-8 and 1-9 illustrate the basic principles of synthesis. Note that three normal distributions of time are shown in Figure 1-8. Two of these distributions, t_a and t_b, overlap to a certain degree, while the distributions to time t_c for the third does not, to any extent.

Figure 1-9 shows the resulting synthesis for each of the four synthesizing modes. Note that resultant mode 2 is skewed to the right. This is due to the effect of t_c, with its larger mean and its own distribution, intermingling with the sampling of the other two. This is the mode which can be expected to occur in a complex system.

2.3.2 Cumulative Time Distributions and the Monte Carlo Method

The basic technique used in the prediction method is to develop a cumulative distribution of times as a means of selecting random time samples for synthesis purposes. Figure 1-1 is an example of a cumulative distribution of Malfunction Active Repair Time. The abscissa represents the probability of completion of an active repair action within a time, t, (i.e., in t or less hours.). The time of completion is shown on the ordinate. Since the expression "within a time t" is used or "in t or less hours" the distribution is cumulative in nature.

The Monte Carlo method uses cumulative distributions such as Figure 1-1 to determine parameter values. This involves the selection of times, t, by randomly picking a probability value of the abscissa and reading the corresponding time, t, on the ordinate. The random selection of probability is performed by

Source: https://assist.dla.mil -- Downloaded: 2017-02-16T09:13Z
Check the source to verify that this is the current version before use.

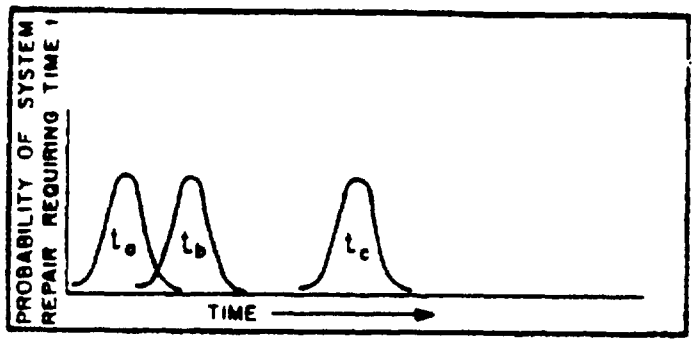

Figure 1-8. Distributions of Times Required to Perform Repair Actions

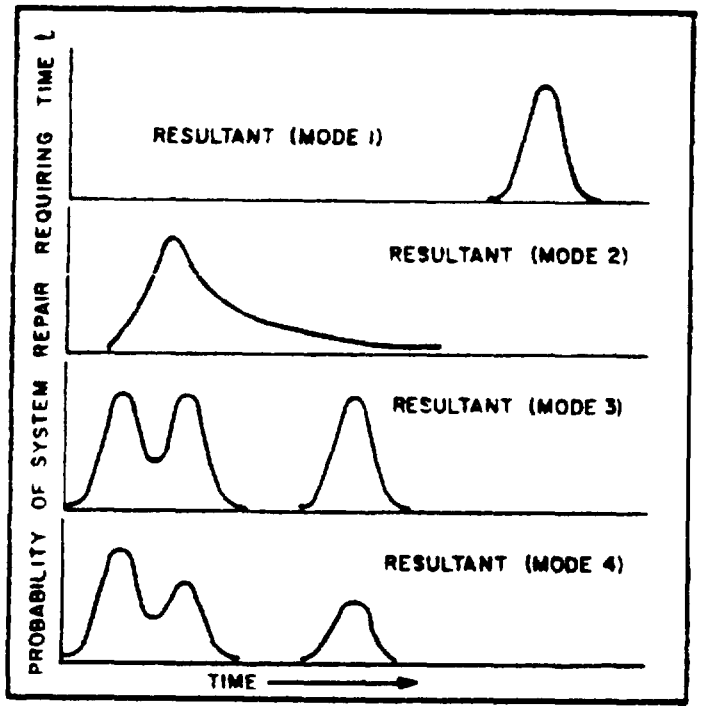

Figure 1-9. Resultants Synthesized From t_a, t_b and t_c

Source: https://assist.dla.mil -- Downloaded: 2017-02-16T09:13Z
Check the source to verify that this is the current version before use.

using a table of random numbers, or by utilizing a random number generator when a computer is employed, to select as many values as needed for the prediction procedure for the desired parameters.

Typical of the method is the synthesizing of "Elemental Times". In this case a cumulative distribution is developed from the normal or log normal distributions as required, and the selection of random times is obtained as explained in Section 3.0 "Application".

Table 1-3 summarizes the synthesis method beginning with the synthesis of Elemental Activities to develop the various maintenance categories and continuing the process up to and including the development of System Downtime.

3.0 APPLICATION

3.1 Preliminary Procedure

(a) Define the system in terms of its constituent units and their input and output boundaries.

(b) Compute the failure rates of the system and of the flight replaceable components listed in the legend of Table 1-10 utilizing acceptable standard reliability prediction procedures.

(c) Find the number of system readouts and calculate the readout factor as outlined in Table 1-11 of Addendum A. This readout factor is used to multiply each value of time given in the distribution of system final test time in Table 1-8.

(d) Estimate an average flight length (in hours) during which the system is to be operated.

3.2 Steps of the Prediction Procedure

Step (1). Compute the occurrence probability of each Elemental Activity as outlined in Addendum A. The activities marked with an asterisk in Table 1-10 cannot occur with any other activity within the category; therefore they should be omitted from the calculations in Steps (2), (3), and (4) below.

Step (2). Determine the probability of occurrence of each Elemental Activity alone by multiplying its computed total occurrence probability by the product

Source: https://assist.dla.mil -- Downloaded: 2017-02-16T09:13Z
Check the source to verify that this is the current version before use.

TABLE 1-3

SYNTHESIS OF TIME DISTRIBUTIONS

STEP NO	FROM	TO	METHODOLOGY	PROCEDURE
1	ELEMENTAL ACTIVITIES	MAINTENANCE CATEGORIES	Unequally sampled non-added variates of distribution of Elemental Activities (made 1 of Figure 1-9)	(1) Calculate the total occurrence probability of each Elemental Activity by using the applicable equation from Table 1-10. (2) Determine the probability of each Elemental Activity alone. (3) Within each category determine the probability of double and triple occurrences of Elemental Activities and add all probabilities. (4) Normalize each category and calculate μ and σ of double and triple activities. (5) Calculate the standard deviate Z for both normal and log normal distributions for the 30 values of time shown in Table 1-8. (6) Determine probability of completing an Elemental Activity for each of the 30 values of time by looking up the calculated value of Z standard deviates in a Table of areas of the normal distribution. (7) For each category and for each of the 30 time values multiply the probability of occurrence of the Elemental Activity by the probability of its completion for each of the 30 designated times. For every one of the 30 time values sum the probabilities for all of the Elemental Activities comprising the category. This gives the distribution of time for the Maintenance Categories. The sixth category, final malfunction test time, is shown in Table 1-8. Plot the six category distributions
2	MAINTENANCE CATEGORIES	MALFUNCTION ACTIVE REPAIR TIME	Combining of maintenance categories by using the combining matrix of Table 1-7.	For each row of Table 1-7, sum randomly selected samples of time from those maintenance categories denoted by an "X". The number of samples per row can be determined by multiplying the desired number of samples of malfunction active repair time (30) by the occurrence probability (P) in the last column of Table 1-7. Thus if N = 200 there would be 200(0.170) = 34 samples selected for each category denoted by an "X" in row 1. After each trial for each category for every "X" shown per row sum the times for each category. Order the data and plot the cumulative distribution of malfunction active repair time.
3		ADMINISTRATIVE TIME	Utilize the Weibull Distribution: $F(t) = 1 - \exp\left[-\left(\frac{(\ln t)}{\alpha}\right)^{\beta}\right]$ where $\beta = 0.027\,x^3 - 0.235\,x^2 + 0.912\,x + 0.230$, $\alpha = \beta/(0.310 - 0.064\,x)$, x = median value of malfunction active repair time for $10 \leq x < 4.84$; $\beta = 2.314$, $\alpha = 3.02$ when $x \geq 4.84$	Calculate the values of α & β of the Weibull equation for random values of repair times "x" selected from the cumulative distribution of active repair times by using a table of random numbers. For each value so selected solve for t by substituting in $t = \frac{\left[-\alpha \ln \left[1 - F(t)\right]\right]^{1/\beta}}{10}$ where t is the probability that administrative time will be t hours or less. Predict the cumulative distribution of Administrative Time by repeating the above process for a minimum of 200 times and plotting the results.
4	ADMINISTRATIVE TIME	MALFUNCTION REPAIR TIME	Malfunction Repair Time can be predicted by sampling from the cumulative distribution of Malfunction Active Repair Time and adding the computed Administrative Time	From the distribution of Malfunction Active Repair Time randomly select (by a table of random numbers) a minimum of 200 random values of malfunction active repair time. To each time add a value of administrative time determined as explained in Step 3.
5 *	MALFUNCTION REPAIR TIME	SYSTEM REPAIR TIME	The distribution of System Repair Time can be predicted by multiplying each of the 200 values of Malfunction Repair Time by 0.95n where n is the total average number of malfunctions following a flight which provides a completed.	Multiply each of the 200 values of Malfunction Repair Time as calculated in Step 4 by 0.95n where n is determined from the equation $n = \frac{\lambda_s M_{fg}}{1 - e - \lambda_s M_{fg}}$ $(1 + \lambda_s T_{ar})$ where: λ_s = System failure rate; M_{fg} = Anticipated average flight length (in hours); T_{ar} = median of the predicted distribution of malfunction active repair time.
6	**	SYSTEM LOGISTIC TIME	A simple but gross correlation has been observed between the number of flight-line replaceable components contained in a system and the probability of a logistic requirement. The probabilities of occurrence were observed to be an increasing function of the "number of component types replaceable at the flight-line level."	Plot the distribution of System Logistic Time, given in Table 1-8 and draw the best fitting line through the plotted points. Determine its probability of occurrence, n_{fg} from Figure 1-10.
7	**	SYSTEM FINAL TEST TIME	The system Final Test Time is affected by the number of redundancy. Hence by considering the "redundant factor" System Final Test Time can be determined.	Multiply each value of time, given in the distribution of System Final Test of Table 1-8, by the "redundant factor", n_{fg} as calculated in Table 1-11. Plot the distribution of System Final Test Time and draw the best fitting line through the plotted points
8	SYSTEM REPAIR TIME SYSTEM LOGISTIC TIME SYSTEM FINAL TEST TIME	SYSTEM DOWN TIME	Unequal sampling, adding variates (made 2 of Table 1-9). It was observed that System Repair Time will occur 100 percent of the time, System Final Test, 5n% of the time and Logistics Time 100 times the probability of occurrence of occurrence of System Logistics Time n_{fg} as determined from Figure 1-10. These are then synthesized by adding the respective times using the matrix of Table 1-9.	Complete the combining matrix Table 1-9 by finding the quantity $100\,n_{fg}$. This is the relative number of samples to be drawn from the distribution of System Logistic Time. Draw $100\,n_{fg}$ random numbers and determine r_1, the quantity of these random numbers between 0 and 99 and r_2 the quantity between 99 and 99. Place an "X" in r_1 spaces below line 30 in the logistics column and an "X" in the r_2 spaces above 30. Select a quantity Q of an integral number of hundreds (no lower than 200) random times from the distribution of System Repair Time. Select Q/2 random times from the distribution of System Final Test Time. Select $Q\,n_{fg}$ random times from the distribution of Logistic Time. Add these random values as shown in the combining matrix (Table 1-9). Plot the resulting distribution of System Downtime and draw the best fitting line through the plotted points.

* Administrative time is developed from the Weibull Distribution alone therefore only the "To" box is shown

** System Logistic Time and System final test time are not developed through synthesis. They are obtained from cumulative distributions developed from experience data which are shown in Table 1-8 and Figure 1-10 respectively.

Note: If a plot of Total System Downtime is desired it is necessary to first develop a distribution of Initial Delay Time and combine that with System Downtime to obtain a distribution of Total System Downtime. This procedure has not been included.

Source: https://assist.dla.mil -- Downloaded: 2017-02-16T09:13Z
Check the source to verify that this is the current version before use.

of the complements of the probabilities of occurrence of all the remaining Elemental Activities within the maintenance category. The formula used in obtaining the probability of occurrence of the events $A_2, A_3, \ldots A_n$ is:

$$P(A_1\bar{A}_2\bar{A}_3\ldots\bar{A}_n) = P(A_1) \cdot \left[1-P(A_2)\right] \cdot \left[1-P(A_3)\right] \cdots \left[1-P(A_n)\right]$$

Step (3). Within each category, determine occurrence of any two activities which can occur together. Use the following formula for activities $A_1, A_2, \ldots A_n$, where, A_1 and A_2 are the activities whose joint probability is to be computed:

$$P(A_1A_2\bar{A}_3\bar{A}_4\ldots\bar{A}_n) = P(A_1) \cdot P(A_2) \cdot \left[1-P(A_3)\right] \cdot \left[1-P(A_4)\right] \cdots \left[1-P(A_n)\right]$$

Probabilities $\leq$ 1% will be considered to be zero.

Step (4). Within each category determine the probability of occurrence of all possible triple Elemental Activities. Multiply the product of the computed total occurrence probabilities of all possible combinations of three activities by the product of the complements of the total occurrence probabilities calculated for the remaining activities within the category. If the occurrence probability of a triple combination is determined to be 1% or less, consider it as zero.

Step (5). Within each category add the probabilities calculated in Steps (2), (3), and (4) to the probabilities calculated in Step (1) for the activities marked with an asterisk in Table 1-10. The sum obtained by this addition, thus, will not contain the probabilities of joint occurrences of four or more activities nor those computed probabilities which are negligibly small (1% or less), therefore the sum of the probabilities will be less than unity as shown in the following example. However, the probabilities can be made to sum to unity as shown in Step (6).

The following example does not represent all of the combinations possible, however, it is being presented to show the method used for calculating combinations of Elemental Activities, (Combinations less than 1% omitted as illustrated below).

Example In Step (2), assume in addition that activity A_2 was marked with an asterisk in Table 1-10 which means it cannot occur with any other activity in a category. We have the following:

Source: https://assist.dla.mil -- Downloaded: 2017-02-16T09:13Z
Check the source to verify that this is the current version before use.

$P(A_1) = .30$

$P(A_2) = .40$

$P(A_3) = .10$

$P(A_4) = .05$

$P(A_1\bar{A}_2\bar{A}_3A_4) = (.0081)$ (= 1%., omit)

$P(\bar{A}_1\bar{A}_2A_3A_4) = (.0021)$ (= 1%., omit)

$P(A_1\bar{A}_2A_3A_4) = (.0009)$ (= 1%., omit)

Total Prob. .85 Obtained by adding the first four numbers.

Step (6). Normalize each category by multiplying each of the probabilities summed above by the reciprocal of their sum (1.176). This step ensures that the probabilities sum to 1 and presupposes that the probabilities of joint occurrences of four or more activities are negligible.

Example Using the values of the previous example we have $\frac{1}{0.85} = 1.176$ and (.30) (1.176) = .35, normalized $P(A_1)$

(.40) (1.176) = .47, normalized $P(A_2)$

(.10) (1.176) = .12, normalized $P(A_3)$

(.05) (1.176) = .06, normalized $P(A_4)$

1.00 Total Probability

Step (7). Complete Table 1-4 as follows:

(a) Insert, in Column 2, the double and triple Elemental Activity numbers whose probabilities of occurrence were calculated as explained in Steps (3) and (4) above.

Source: https://assist.dla.mil -- Downloaded: 2017-02-16T09:13Z
Check the source to verify that this is the current version before use.

(b) Determine μ_{1_α} and $\sigma_{1_{\alpha\beta}}$ or $\mu_{1_{\alpha\beta\delta}}$ and $\sigma_{1_{\alpha\beta\delta}}$ for the distribution of the multiple activities from the following equations:

$$\mu_{1_{\alpha\beta}} = \mu_{1_\alpha} + \mu_{1_\beta} \quad \text{or} \quad \mu_{1_{\alpha\beta\delta}} = \mu_{1_\alpha} + \mu_{1_\beta} + \mu_{1_\delta}$$

$$\sigma_{1_{\alpha\beta}} = \sqrt{\sigma_{1_\alpha}^2 + \sigma_{1_\beta}^2} \quad \text{or} \quad \sigma_{1_{\alpha\beta\delta}} = \sqrt{\sigma_{1_\alpha}^2 + \sigma_{1_\beta}^2 + \sigma_{1_\delta}^2}$$

Enter the calculated parameters in Columns 3 and 4 of Table 1-4. The equations for the standard deviations reflect the assumption of the statistical independence of activities or multiple activities listed in Table 1-4.

(c) If $\sigma_1 > \mu_1$ or if $\mu_1 > 1$ hour, enter LN in Column 5. If $\sigma_1 < \mu_1 < 1$ hour, enter N in Column 5. LN means log normal, and N means normal (see 2.2).

(d) Complete Column 6 of Table 1-4 by inserting the appropriate normalized occurrence probabilities as calculated in Step (6).

(e) For each LN entry in Column 5, compute (and enter in Columns 7 and 8) μ_2 and σ_2 values from the following equations:

$$\mu_2 = \frac{\mu_1^2}{\sqrt{\mu_1^2 + \sigma_1^2}}$$

$$\sigma_2 = \sqrt{\log\left(\frac{\mu_1^2 + \sigma_1^2}{\mu_1^2}\right)}$$

The μ_2 and σ_2 values in Column 7 and 8 will be identical to those in Columns 3 and 4 for Elemental Activities designated by an N in Column 5. This transformation of the mean and standard deviation of each log normal distribution to the same parameters of its normal distribution transform is required for the next step.

Source: https://assist.dla.mil -- Downloaded: 2017-02-16T09:13Z
Check the source to verify that this is the current version before use.

Source: https://assist.dla.mil -- Downloaded: 2017-02-16T09:13Z
Check the source to verify that this is the current version before use.

TABLE 1-4 (Continued)

1	2	3	4	5	6	7	8
Category	Elemental Activity Number	Basic Distribution Parameters μ_1 (hrs.)	σ_1 (hrs.)	Distribution Type	Occurrence Probability	Distribution Parameters μ_2 (hrs.)	σ_2 (hrs.)
Fault Location (continued)	9	0.140	0.213	LN		0.077	1.095
	10	0.807	1.000	LN		0.507	1.095
	11	0.344	0.351	LN		0.240	0.844
	12	0.466	0.430	N		0.466	0.430
	13	0.582	0.541	N		0.582	0.541
	14	0.683	0.960	LN		0.396	1.044
	15	0.320	0.162	N		0.320	0.162
	--						
	.						
	.						
	.						

	.						
	.						
	.						
Part Procurement	1	0.022	0.030	LN		0.012	1.086
	2	0.313	0.238	N		0.313	0.238
	3	0.315	0.171	N		0.315	0.171
	4*	0.199	0.144	N		0.199	0.144
	--						
	.						
	.						
	.						

	.						
	.						
	.						
Repair	1	0.394	0.5 8	LN		0.239	1.002
	2	0.380	0.603	LN		0.203	1.122
	3	0.066	0.055	N		0.066	0.055
	4	0.415	0.541	LN		0.253	0.997
	5	0.993	0.862	N		0.993	0.862
	6	1.416	0.701	LN		1.269	0.468
	7*	0.752	0.747	N		0.752	0.747
	8	0.810	1.114	LN		0.476	1.030
	--						
	.						
	.						

	.						
	.						

* Cannot occur with any other activity within the category

Source: https://assist.dla.mil -- Downloaded: 2017-02-16T09:13Z
Check the source to verify that this is the current version before use.

Step (8). This step transforms a normal variable with mean μ_2 and standard deviation σ_2 to a standard normal variable with a mean of zero and a standard deviation of unity. In this form the cumulative normal distribution is readily available in Tables, or can be easily calculated on an electronic computer. The transformations for normal and log normal variables, respectively are:

$$Z_i = \frac{t_i - \mu_2}{\sigma_2}$$ (for parameters designated "N", in Column 5 of Table 1-4).

$$Z_i = \frac{\log t_i - \log \mu_2}{\sigma_2}$$ (for parameters designated "LN" in Column 5 of Table 1-4).

The values of μ_2 and σ_2 are obtained from Columns 7 and 8 of Table 1-4. The t_i values are given in Column 1 of Table 1-5. The cumulative probabilities of completing an Elemental Activity by a designated time t_i are obtained by entering a table of the cumulative normal distribution and obtaining each desired probability opposite the entry Z_i. These probabilities are then entered in Column 2 of Table 1-5. Column 3 of Table 1-5 is determined by multiplying the values in Column 2 by the probability of occurrence of the Elemental Activity which is listed in Column 6 of Table 1-4. That is, multiply each cumulative probability of completing an Elemental Activity in a given time (t_i) by the probability of occurrence of the activity. This is to be done for each maintenance category.

Step (9). For each of the twenty discrete values of time (t_i) listed in Column 1 of Table 1-5 sum the corresponding Elemental Activity probabilities shown in Column 3. For example, assuming there are 8 Elemental Activities comprising the Category of "Preparation" each Elemental Activity will have an individual sheet such as is illustrated by Table 1-5. Therefore, there will be eight probability values, one on each sheet, for each of the twenty discrete values of time (t_i) listed in Column 1. Summing each of these eight probabilities (Column 3), for each time t_i will result in a total probability value for t_i. Since there are twenty t_i values, twenty points will result, which when plotted represent the distribution of the Category of "Preparation Time". Other category distributions with the exception of "Final Malfunction Test Time", will be determined from their Elemental Activities in a similar manner. "Final Malfunction Test Time" has constant parameters and is given in Table 1-6. Plot the six individual category distributions, i.e., Preparation, Malfunction Verification, Fault Location, Part Procurement, Repair and Final Malfunction Test.

Source: https://assist.dla.mil -- Downloaded: 2017-02-16T09:13Z
Check the source to verify that this is the current version before use.

TABLE 1-5

PROPOSED FORMAT FOR DETERMINING THE CUMULATIVE TIME DISTRIBUTION

Category _____ μ_2 = _____ ☐ N

Elemental Activity No. _____ σ_2 = _____ ☐ LN

1 Time (Hours)	2 Probability of Completing Elemental Activity by Designated Time	3 (Probability of Completing Elemental Activity by Designated Time) x (Probability of Occurrence of Elemental Activity)
0.01		
0.02		
0.03		
0.05		
0.07		
0.10		
0.15		
0.20		
0.30		
0.40		
0.50		
0.60		
0.80		
0.90		
1.00		
1.50		
2.00		
3.00		
5.00		
10.00		

Source: https://assist.dla.mil -- Downloaded: 2017-02-16T09:13Z
Check the source to verify that this is the current version before use.

TABLE 1-6

PROBABILITY OF COMPLETING ELEMENTAL ACTIVITY OF FINAL MALFUNCTION TEST BY DESIGNATED TIME

Time (Hours)	Probability
0.01	0.008
0.02	0.022
0.03	0.043
0.05	0.083
0.07	0.180
0.10	0.250
0.15	0.270
0.20	0.380
0.30	0.580
0.40	0.700
0.50	0.790
0.60	0.840
0.80	0.890
0.90	0.905
1.00	0.934
1.50	0.982
2.00	0.993
3.00	0.999
5.00	1.000
10.00	1.000
Log Normal Distribution	$\bar{\mu} = 0.26$

Source: https://assist.dla.mil -- Downloaded: 2017-02-16T09:13Z
Check the source to verify that this is the current version before use.

Step (10). Determine the distribution of malfunction active repair time by using the combining matrix (Table 1-7), the instructions thereon, and the six category distributions plotted in Step (9), above.

Step (11). From the above distribution (the values are now plotted and smoothed), select a minimum of 200 random values of malfunction active repair time (fitted). To each time, add a value of administrative time to be calculated in Step (12) below. The result is malfunction repair time.

Step (12). The following equation is used to compute administrative time, t:

$$t = \frac{-\alpha \ln \left[1 - F(t)\right]^{1/\beta}}{10}$$

where: F(t) is a randomly selected probability. An acceptable method is to use a table of random numbers for this purpose.

To obtain α and β use the equations:

$$\beta = 0.027\ X^3 - 0.233\ X^2 + 0.521\ X + 0.230 \text{ and}$$

$$\alpha = \frac{\beta}{0.310 - 0.064\ X}$$

where: X is a value of malfunction repair time selected in Step (11).

Choose a minimum of 200 X's and for each value compute the corresponding α and β values. Also select the same number of F(t) values by sampling by means of a table of random numbers. Using the three sets of values, α, β, and F(t), we obtain 200 (or more) values of t from the above equation.

Step (13). Multiply each of the 200 values of active repair time plus administrative time (i.e., malfunction repair time) by 0.95N.

where:

$$N = \frac{\lambda_1 N_{15}}{1 - e - \lambda_1 N_{15}} \left(1 + \lambda_1 \bar{t}_{er}\right)$$

Source: https://assist.dla.mil -- Downloaded: 2017-02-16T09:13Z
Check the source to verify that this is the current version before use.

TABLE 1-7

COMBINING MATRIX FOR ACTIVE REPAIR TIME SYNTHESIS

(X = Occurrence)

Instruction:

For each row, sum randomly selected samples of time* from those maintenance categories denoted by an "X". This summation will be executed (M) (P) times for each row, where M is the desired number of samples of malfunction active repair time, and P is the indicated probability of occurrence of each row.

Row Number	Preparation	Malfunction Verification	Fault Location	Part Procurement	Repair	Malfunction test	Occurrence Probability of Row
1	x	x	x	x	x	x	0.170
2		x	x	x	x	x	0.022
3	x		x	x	x	x	0.022
4	x	x	x		x	x	0.064
5	x	x	x	x	x		0.173
6			x	x	x	x	0.019
7	x	x			x	x	0.012
8		x	x	x	x		0.029
9	x	x	x		x		0.077
10	x		x	x	x		0.024
11		x	x		x	x	0.011
12	x	x				x	0.008
13	x	x	x				0.011
14			x	x	x		0.050
15		x	x		x		0.018
16	x	x			x		0.032
17	x		x		x		0.011
18		x				x	0.008
19	x	x					0.173
20		x					0.065

* Random values of time may be selected from all graphs by using any published table of random numbers. These random numbers represent probabilities, and, from the cumulative distribution graph, the time which corresponds to the random probability is determined as a random time from that distribution.

Source: https://assist.dla.mil -- Downloaded: 2017-02-16T09:13Z
Check the source to verify that this is the current version before use.

$\bar{t}_{0r}$ is the median of the predicted distribution of malfunction active repair time; λ_1 is the system failure rate; and N_{15} is the anticipated average flight length. When malfunction repair time is multiplied by 0.95N, system repair time is obtained. The factor of 0.95 accounts for an overlap time observed during which two or more malfunctions are being repaired concurrently.

Step (14). Plot the system repair times obtained in Step (13).

Step (15). This step involves system final test time. Its probability of occurrence was observed to be about 0.5. The probability distribution of final test times as shown in Table 1-8 was observed mainly from AN/ASB-4 data. A system readout factor, as computed in Table 1-11, is used as a multiplier of the time completion probabilities of Table 1-8 when a different system is being considered. The larger the number of readouts, the higher the probability of completion of system final test in a given time.

Step (16). Plot the distribution of system logistic time, given in Table 1-8, and draw the best fitting line through the plotted points. Determine its (i.e., a logistic time event) probability of occurrence, N_{20}, from Figure 1-10. The distribution of system logistic time is based on observed data. The probabilities of occurrence were observed to be an increasing function of the "number of component types replaceable at the flight-line level".

Now the inputs from Step (14), (15), (16) are available in the form of cumulative time distributions for system repair, system final test, and system logistic events. A new combining matrix (Table 1-9) is now developed for the synthesis of a system downtime distribution. Repair time occurs 100% of the time, test time occurs 50% of the time, and logistic time occurs a variable percentage of the time according to Figure 1-10. The occurrences are indicated by the X's in Table 1-9.

The numbers which replace the X's are drawn at random from the fitted distributions of repair times, final test times, and logistic times. A distribution of system downtimes is obtained from this synthesis. Steps (17) and (18), which follow, describe the method of completing the combining matrix in Table 1-9.

Step (17). Complete the combining matrix (Table 1-9) by finding the quantity $100N_{20}$. This represents the relative proportion of the total sample of system downtimes which will contain system logistic times. Draw $100N_{20}$ random numbers between 00 and 99 and determine r_1 and r_2 (the quantities of those numbers between 00 and 49, and between 50 and 99, respectively). Place an x in r_1 spaces above line 50 and x in r_2 spaces below (and including) line 50.

Source: https://assist.dla.mil -- Downloaded: 2017-02-16T09:13Z
Check the source to verify that this is the current version before use.

TABLE 1-8

OBSERVED DISTRIBUTIONS OF SYSTEM FINAL TEST TIME AND SYSTEM LOGISTIC TIME

System Final Test Time	
Time, t, in Hours	Probability of Time, t, or Less
0.15	0.020
0.20	0.055
0.30	0.172
0.40	0.31
0.50	0.45
0.60	0.56
0.80	0.728
0.90	0.790
1.00	0.830
1.50	0.945
2.00	0.980
3.00	1.000

System Logistic Time	
Time, t, in Hours	Probability of Time, t, or Less
0.50	0.010
0.60	0.020
0.80	0.071
0.90	0.08
1.00	0.10
1.50	0.17
2.00	0.22
3.00	0.28
4.00	0.32
5.00	0.37
6.00	0.40
8.00	0.42
10.00	0.43
15.00	0.57
20.00	0.78
40.0	0.82
50.0	0.90
60.0	0.94
150.0	1.00

Source: https://assist.dla.mil -- Downloaded: 2017-02-16T09:13Z
Check the source to verify that this is the current version before use.

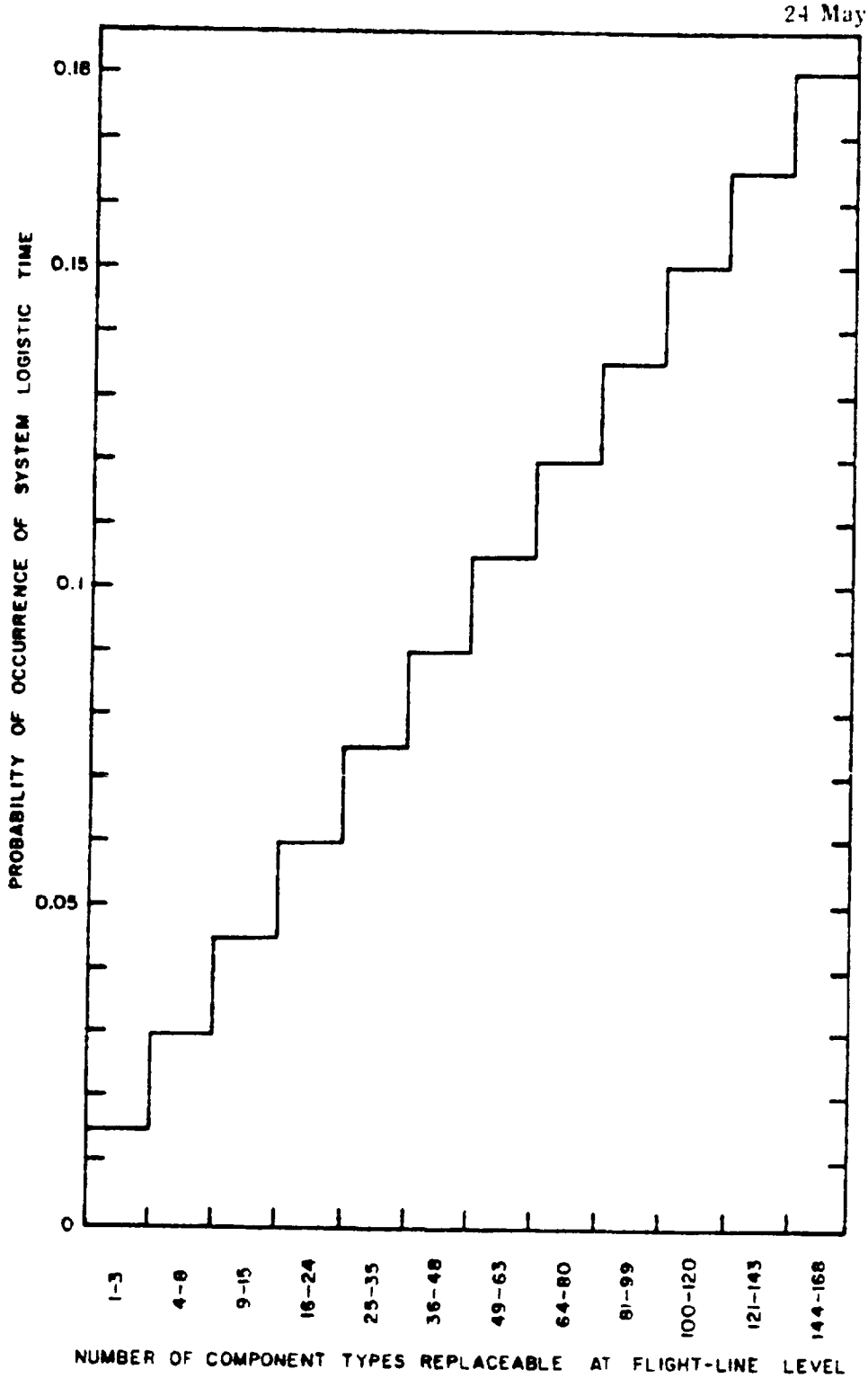

Figure 1-10. Probability of Occurrence of System Logistic Time

Source: https://assist.dla.mil -- Downloaded: 2017-02-16T09:13Z
Check the source to verify that this is the current version before use.

TABLE 1-9

COMBINING MATRIX FOR SYSTEM DOWN TIME SYNTHESIS
(x = Occurrence)

Synthesis Number	System Repair Time	System Final Test Time	System Logistic Time	Synthesis Number	System Repair Time	System Final Test Time	System Logistic Time
1	x	x		51	x		
2	x	x		52	x		
3	x	x		53	x		
4	x	x		54	x		
5	x	x		55	x		
6	x	x		56	x		
7	x	x		57	x		
8	x	x		58	x		
9	x	x		59	x		
10	x	x		60	x		
11	x	x		61	x		
12	x	x		62	x		
13	x	x		63	x		
14	x	x		64	x		
15	x	x		65	x		
16	x	x		66	x		
17	x	x		67	x		
18	x	x		68	x		
19	x	x		69	x		
20	x	x		70	x		
21	x	x		71	x		
22	x	x		72	x		
23	x	x		73	x		
24	x	x		74	x		
25	x	x		75	x		
26	x	x		76	x		
27	x	x		77	x		
28	x	x		78	x		
29	x	x		79	x		
30	x	x		80	x		
31	x	x		81	x		
32	x	x		82	x		
33	x	x		83	x		
34	x	x		84	x		
35	x	x		85	x		
36	x	x		86	x		
37	x	x		87	x		
38	x	x		88	x		
39	x	x		89	x		
40	x	x		90	x		
41	x	x		91	x		
42	x	x		92	x		
43	x	x		93	x		
44	x	x		94	x		
45	x	x		95	x		
46	x	x		96	x		
47	x	x		97	x		
48	x	x		98	x		
49	x	x		99	x		
50	x	x		100	x		

Source: https://assist.dla.mil -- Downloaded: 2017-02-16T09:13Z
Check the source to verify that this is the current version before use.

Step (18). Select a quantity, Q, of an integral number of hundreds (no fewer than 200) random times from the distribution of system repair times, Step (14). Select Q/2 random times from the distribution of system final test times, (Step 15). Select $Q N_{20}$ random times from the distribution of logistic time plotted in Step (16). Put these times in place of X's in Table 1-9 and add them across each row to obtain system downtimes. Plot the distribution of system downtimes and draw the best fitting line through the points.

Source: https://assist.dla.mil -- Downloaded: 2017-02-16T09:13Z
Check the source to verify that this is the current version before use.

This page intentionally left blank.

Source: https://assist.dla.mil -- Downloaded: 2017-02-16T09:13Z
Check the source to verify that this is the current version before use.

ADDENDUM A

CALCULATION OF THE PROBABILITIES OF OCCURRENCE OF ELEMENTAL ACTIVITIES

The probabilities of occurrence of Elemental Activities, calculated from the occurrence probability functions, are given in Table 1-10. These functions were determined, for the most part, by subjective selection of those system characteristics which are deemed logically responsible for the occurrence of the activity. The selected characteristics were then used as the independent variables in a multiple-linear regression analysis, with the dependent variable being the observed occurrence probability. The following statements concerning the occurrence probability functions must be complied with:

(a) If P is a calculated occurrence probability, and if $P < 0$, set $P = 0$.

(b) If the denominator of any term $= 0$, delete that term and recalculate P.

For explanation of the symbols used in the occurrence probability functions, refer to the legend of Table 1-10.

Source: https://assist.dla.mil -- Downloaded: 2017-02-16T09:13Z
Check the source to verify that this is the current version before use.

TABLE 1-10

OCCURRENCE PROBABILITY FUNCTIONS FOR THE ELEMENTAL ACTIVITIES

CATEGORY	STEP NO	ACTIVITY NO	ELEMENTAL ACTIVITY	OCCURRENCE PROBABILITY FUNCTION P
Preparation	1	1	System turn-on, warm-up, setting dials and counters as necessary.	$\frac{1-e^{-\lambda_1 N_{15}}}{\lambda_1 N_{15}}$
	2	2*	Activity #1 plus time awaiting particular component stabilization.	$0.025\,(N_{14})$
	3	3	Opening and closing radome.	λ_2/λ_1
	4	4	Gaining access and reinstalling covers (other than radome).	λ_{12}/λ_1
	5	5	Obtaining test equipment and/or Tech orders.	$0.855 - 0.022\,N_3 - 0.319\,\frac{(\lambda_1-\lambda_{13})}{\lambda_{13}(N_1-1)}$
	6	6	Checking maintenance records.	$1.38\,(P_8) - 19.14\,\frac{(\lambda_1)}{N_1} - 0.001\,(N_1) + 0.027\,(N_3) - 0.492$
	7	7	Procuring components in anticipation of need.	$0.118 - 0.449\,(\lambda_3+\lambda_4) - 0.052\,\frac{(\lambda_3+\lambda_4)}{\lambda_1}$
	8	8	Setting up test equipment	$1.07\,(P_9) - .2$
Malfunction Verification	9	1*	Observing indications only	$9.65\left(\frac{N_9}{N_1}\right) + 0.018\,(N_1) - 0.092\,(N_9) + 0.059\,(N_4) - 0.193\,(N_5) - 0.065$
	10	2	Using test equipment to verify malfunctions inherently not reproducible on ground	$0.0077\,N_{13}$
	11	3	Performing standard test problems or checks.	$0.392\,N_{12} - 0.169\left(\frac{N_8}{N_1}\right) - 0.042\left(\frac{N_4}{N_3}\right) + 0.380$
	12	4	Testing for pressure leaks.	$0.0065\,(N_6)$
	13	5	Attempting to observe elusive or non-existent symptom(s).	$0.25\,(N_{11}) + 0.05\,(N_{12})$
	14	6	Using special test equipment designed specifically for this system.	$[0.997 - 0.995\,(P_{11}) - 1.627\,(P_9)]\,N_{10}$
	15	7	Making a visual integrity check.	$0.149\,(P_{11}) - 0.036\,(P_{14})$
Fault Location	16	1*	Fault self-evident from symptom observation.	$0.210\,(P_8) + 0.478\,(P_{15}) + 0.012\,(P_7) + 0.030$
	17	2*	Interpreting symptoms by mental analysis only (from knowledge/experience).	$0.228\,(P_8) - 0.897\,(P_9) - 0.010\left(\frac{P_2}{P_6}\right) + 0.623$
	18	3	Interpreting displays at different settings of controls	$1.8\left(\frac{N_7}{N_3}\right)$
	19	4	Interpreting meter readings.	$0.07\,N_{16}$
	20	5	Removing unit(s)/subunit(s) and checking in shop	$\left[0.213\,\frac{(\lambda_1-\lambda_3+\lambda_2-\lambda_4)}{1} + 0.798\,(P_{17}) + 0.893\,(P_{11}+P_{13}+P_{14}) + 2.134\,(P_7) - 0.473\right]N_{17}$

* Cannot occur with any other activity within the category

Source: https://assist.dla.mil -- Downloaded: 2017-02-16T09:13Z
Check the source to verify that this is the current version before use.

TABLE 1-10 (Continued)

CATEGORY	STEP NO	ACTIVITY NO	ELEMENTAL ACTIVITY	OCCURRENCE PROBABILITY FUNCTION, P
Fault Location (Continued)	21	6	Switching and/or substituting unit(s)/subunit(s)	$0.277\,(P_{13}) + 0.292\,\frac{(P_7)}{P_{17}} - 0.410\,(P_7) + 0.021$
	22	7	Switching and/or substituting part(s).	$0.05\,\frac{(\lambda_8)}{\lambda_6}$
	23	8	Removing and checking parts.	$0.25\,\frac{\lambda_8 N_{15}}{\lambda_1}$
	24	9	Making a visual integrity check.	$0.318\,(P_9) + 0.271\,(P_{14}) - 0.037$
	25	10	Checking voltages, continuity, waveforms and/or signal tracing.	$0.018\,(N_9) - 0.001\,(N_3) - 0.058\left(\frac{N_9}{N_3}\right) + 0.017$
	26	11	Consulting Tech orders.	$0.5\,(P_{18})\,(P_{20})$
	27	12	Conferring with Tech Reps or other maintenance personnel.	$0.002\,(N_9) - 0.001\,(N_3) + 0.096\left(\frac{N_9}{N_3}\right) + 0.024$
	28	13	Performing standard test problem(s).	$(P_{12})\,(P_8)$
	29	14	Isolating pressure leak.	$0.0004\,\frac{(N_5)}{\lambda_1}$
	30	15	Using special test equipment designed specifically for this system.	$\left[0.153\,(P_{14}) + 0.352\,\frac{(P_{27})}{P_8} + 0.022\right] N_{20}$
	31	1	Obtaining replacement components(s) from aircraft spares or tool box.	$0.639\,\frac{(\lambda_2)}{\lambda_1 - \lambda_6} + 0.399\,\frac{(\lambda_8)}{\lambda_1} + 0.013$
	32	2	Obtaining replacement components from bench, shop, or pre-issue stock.	$1 - P_{31}$
	33	3	Obtaining replacement component(s) by cannibalization.	0.02
	34	4*	Attempting to obtain replacement component(s). Unavailable.	$1.4\,(N_{20})$
Repair	35	1	Replacing unit(s)/subunit(s).	$0.051\,\frac{(\lambda_1 - \lambda_7)}{\lambda_1} + 1.362\,(P_{32}) - 0.579$
	36	2	Replacing parts.	$1.922\,(P_{31}) - 0.515\,\frac{(\lambda_8)}{\lambda_1} + 0.006$
	37	3	Correcting improper installation or defective plug-in connection(s).	$0.408\,(P_{17})\,(P_9) - 0.046\,(P_{19}) - 0.044\,(\lambda_1) + 0.011$
	38	4	Making adjustments in aircraft	$0.0003N_1 + 0.077\,\frac{(\lambda_8)}{\lambda_1} + 0.025$
	39	5	Making adjustments in shop.	$P_{20}\,\frac{(\lambda_8)}{\lambda_1}$
	40	6	Baking magnetron.	$0.006\,(N_{19})$
	41	7*	Precautionary repair activity (includes so-called fault location, part procurement, and repair times spent when symptom not verified)	$(P_{11})\,(P_{13}) - 0.03$
	42	8	Repairing wiring or connections.	$(P_{24})\,(N_{12}) + 0.5\,(P_{23})$

* Cannot occur with any other activity within the category

Source: https://assist.dla.mil -- Downloaded: 2017-02-16T09:13Z
Check the source to verify that this is the current version before use.

TABLE 1-10 LEGEND

(λ's to be expressed as failures per hour)

N_1 - Number of flight-line replaceable components in system.

N_2 - Number of different types of flight-line replaceable components in system.

N_3 - Number of readouts in system, as determined by use of Table 1-11.

N_4 - Number of system readouts whose function is to evaluate a standard test problem.

N_5 - Number of different types of spares carried aboard the aircraft.

N_6 - Number of connectors (electrical or mechanical) which maintain dynamic pressure integrity.

N_7 - Number of CRT's in the system (excluding built-in test scopes).

N_8 - Number of circuit parameters monitored by built-in meters.

N_9 - Number of test points in the system.

N_{10} - Is special test equipment, designed specifically for this system, used for flight-line maintenance?

If yes, $N_{10} = 1$.

If no, $N_{10} = 0$.

N_{11} - Does the system contain any information devices, as determined in Table 1-11.

If yes, $N_{11} = 1$.

If no, $N_{11} = 0$.

N_{12} - Does the system contain any auditory devices, as determined in Table 1-11.

If yes, $N_{12} = 1$.

If no, $N_{12} = 0$.

(continued)

Source: https://assist.dla.mil -- Downloaded: 2017-02-16T09:13Z
Check the source to verify that this is the current version before use.

TABLE 1-10 - LEGEND (Continued)

N_{13} - Is special test equipment used to reproduce any inflight conditions not otherwise reproducible on the ground?

If yes, $N_{13} = 1$.
If no, $N_{13} = 0$.

N_{14} - Does system contain any components which require an unusually long time to reach positional or thermal steady-state condition? (Time-delay relays and magnetron warm-up are not considered unusual.)

If yes, $N_{14} = 1$.
If no, $N_{14} = 0$.

N_{15} - Anticipated average flight length (in hours).

N_{16} - Are there provisions such as mock-up, go-no-go tester in the shop for checking flight-line replaceable parts?

If yes, $N_{16} = 1$.
If no, $N_{16} = 0$.

N_{17} - Are there provisions such as mock-up, go-no-go tester in the shop for checking flight-line replaceable "black boxes"?

If yes, $N_{17} = 1$.
If no, $N_{17} = 0$.

N_{18} - If $N_8 > 0$, then $N_{18} = 1$.
If $N_8 = 0$, then $N_{18} = 0$.

N_{19} - Does system contain one or more magnetrons?

If yes, $N_{19} = 1$.
If no, $N_{19} = 0$.

N_{20} - Probability of occurrence of logistic time, as determined by the use of Figure 1-10.

N_{21} - Readout factor, as calculated in Table 6-1.

(continued)

Source: https://assist.dla.mil -- Downloaded: 2017-02-16T09:13Z
Check the source to verify that this is the current version before use.

TABLE 1-10 - LEGEND (Continued)

P_n - Probability calculated in the nth step of Table 1-10

λ_1 - Failure rate of the system.

λ_2 - Summation of failure rates of flight-line replaceable components located in the aircraft radome.

λ_3 - Summation of failure rates of flight-line replaceable components for which spares are carried aboard the aircraft.

λ_4 - Summation of failure rates of flight-line replaceable components whose operation is reflected by a readout.

λ_5 - Summation of failure rates of those flight-line replaceable components, whose operation is reflected by a readout and for which a spare is carried aboard the aircraft.

λ_6 - Summation of failure rates of flight-line replaceable components which contain adjustment(s).

λ_7 - Summation of failure rates of flight-line replaceable components which contain either adjustment(s) or flight-line replaceable parts, or both.

λ_8 - Summation of failure rates of flight-line replaceable parts (excluding lamps and hardware).

λ_9 - Summation of failure rates of flight-line replaceable parts for which spares are carried aboard the aircraft.

λ_{12} - Summation of failure rates of components accessible through -- or which contain -- access covers (other than radome), removal of which covers may be necessary for flight-line maintenance.

λ_{13} - Failure rate of that flight-line replaceable component which has the maximum failure rate.

Source: https://assist.dla.mil -- Downloaded: 2017-02-16T09:13Z
Check the source to verify that this is the current version before use.

TABLE 1-11

SYSTEM READOUTS			
Readouts Able to Reflect System Operation	(A) Quantity	(B) Normalized Weighting Factor	(C) Product (A) (B)
I. Visual			
A. Information Devices (i.e., position-, velocity-, and angle-indicating instruments)	----	0.05	----
B. Circuit Monitors (i.e., voltage-current, power-pressure, and frequency indicators)	n* = ____ n = ____ n = ____ n = ____	0.03+ 0.003(n-1)**	---- ---- ---- ----
C. Cathode Ray Displays	----	0.14	----
D. Optics	----	0.05	----
II. Auditory			
A. Audio	----	0.03	----
B. Transmitter Sidetone	----	0.03	----
Total = (Number of System Readouts)		Total = (Readout Factor)	

* n is the number of different parameters that can be read on each monitor by a switching arrangement.

** This weighting factor must be multiplied by each of the circuit monitors listed in Column (A).

Source: https://assist.dla.mil -- Downloaded: 2017-02-16T09:13Z
Check the source to verify that this is the current version before use.

ADDENDUM B

DEFINITIONS OF MAINTAINABILITY TERMS

1. Preparation time is the time spent obtaining, setting up, and calibrating maintenance aids; warming up equipment; etc.

2. Malfunction verification time is the time spent testing the system to observe previously reported symptoms of malfunction.

3. Fault location time is the time spent arriving at a decision as to which items caused the system to malfunction. This includes time spent working on replacing, attempting to repair, and adjusting) portions of the system shown by subsequent interim tests not to have been the cause of the malfunction.

4. Part procurement time is the time spent by the maintenance man in procuring, or trying to procure, necessary replacement items.

5. Repair time is the time spent replacing, repairing, or adjusting all items suspected to have been the cause of the malfunction, except those subsequently shown by interim test of the system not to have been the cause.

6. Malfunction final test time is the time spent confirming that the malfunction in question has been corrected, after which time no further maintenance is performed on that malfunction.

7. Malfunction active repair time is the composite of Items 1 through 6, above.

8. System final test time is the time spent confirming that the system is in satisfactory operating condition (as determined by the maintenance man) following maintenance. It is possible for a system final test to be performed after each correction of a malfunction.

9. Logistic time is all replacement procurement time, except that time when the maintenance man is engaged in the procurement activity.

10. Initial delay time is the time between the moment the equipment becomes available for maintenance and the moment work is commenced.

11. Malfunction administrative time is all time between the beginning and end of work on a malfunction, except for logistic or active maintenance time for that malfunction.

Source: https://assist.dla.mil -- Downloaded: 2017-02-16T09:13Z
Check the source to verify that this is the current version before use.

12. System administrative time is all system downtime other than active maintenance time and logistic time.

13. System downtime is the time interval between the commencement of work on a system malfunction and the time when the system has been repaired and/or checked by the maintenance man, and no further maintenance activity is executed.

14. Total system downtime is the time interval between the reporting of a system malfunction and the time when the system has been repaired and/or checked by the maintenance man, and no further maintenance activity is executed.

15. Test point is a jack or similar fitting to which a test probe is attached for measuring or observing a circuit parameter or waveform.

16. Readout is a device built into the system which monitors, either primarily or incidentally, the operation of some portion of the system.

17. Standard test problem is an evaluation of the performance of a system, or any part of it, conducted by setting parameters into the system; the parameters are operated on and the result obtained from system readouts.

Source: https://assist.dla.mil -- Downloaded: 2017-02-16T09:13Z
Check the source to verify that this is the current version before use.

Source: https://assist.dla.mil -- Downloaded: 2017-02-16T09:13Z
Check the source to verify that this is the current version before use.

PROCEDURE II

1.0 GENERAL

This maintainability prediction procedure describes the methods and techniques which are used to predict Corrective, Preventive and Active Maintenance parameters.

As applied in this procedure corrective maintenance time includes only actual repair time which is the period when repair work is in progress. Therefore, it excludes such parameters of measure as "administrative time" or "logistic time", etc., which are usually considered in definitions of Corrective Maintenance.

Similarly, preventive maintenance time includes only the actual active time which is required for repair during a preventive maintenance shut down. It does not include preventive maintenance time which is expended while equipment is in operation.

Active maintenance combines both corrective and preventive maintenance because it includes the time when both of these activities are actually being performed. The details and parameters of measure are discussed in 1.4.

There are two methods which are presented for predicting Corrective Maintenance. The first method described in Part A of this procedure results in a maintainability prediction expressed in hours because it utilizes tabulated maintenance task repair times, recorded in hours, which have been established from past experience. These data are discussed in 1.6 and tabulated in Table 2-2. The second method, explained in Part B of this procedure, does not use tabulated task times. Instead it utilizes estimates of man-hours required to perform a maintenance task which are based on past experience or an analysis of the design with respect to maintenance.

The two different measures, one in terms of hours which is representative of actual elapsed time, and the other in man-hours which is a measure of manpower required to complete a maintenance activity in a given time, have of necessity resulted in the development of a different symbology for each method. These are explained in Parts A and B respectively of this procedure and summarized in 1.4. However, once the repair times have been established either in hours or man-hours the actual prediction procedures for both Parts A and B are very similar since each uses work sheets which closely resemble each other.

Source: https://assist.dla.mil -- Downloaded: 2017-02-16T09:13Z
Check the source to verify that this is the current version before use.

Part A is solely concerned with corrective maintenance, during the final design stage of the product development cycle, and describes the method of obtaining a prediction of the mean time to repair expressed in hours when the information described in 1.5 is available. 1/

Part B covers active maintenance which includes both preventive and corrective maintenance and details the methods for obtaining an estimate of the mean time expressed in man-hours for performing both types of maintenance.

1.1 Philosophy, Assumptions and Summary

The two most important parameters of measure in the field of Maintainability are the duration of downtime due to maintenance and the number of personnel required. Each are important measures of maintainability and ideally, both should be kept at a minimum if possible. However, for a critical mission, the number of maintenance man-hours required may not be as important as minimizing the time required to repair regardless of the number of men involved or the inefficiency of their utilization. Conversely, when downtime is not of paramount significance, the number of man-hours becomes an important parameter of measure and control. This prediction procedure outlines the methods of predicting both parameters of measure, the results of which can be utilized for design improvement or other evaluations.

This procedure assumes that "repair times", applicable to certain equipment types, can be used to predict the maintainability of like equipments and devices. Therefore, it tabulates certain repair times which can be used as described in 2.0 and 3.0 to develop a prediction of corrective maintenance in hours.

Another assumption is that reasonably good estimates can be made of the maintenance tasks required for corrective and preventive maintenance by analyzing basic features of the design. Moreover, it is assumed that the number of hours or man-hours required to perform these tasks for both corrective and preventive maintenance can be estimated from the information developed.

A fundamental philosophy in any case, is that the magnitude of the repair time, for a discrete repair, is the sum of the individual maintenance task times which are required for its completion. Seven such maintenance tasks are assumed to effect the magnitude of maintenance time. These are: Localization, Isolation, Disassembly, Interchange, Reassembly, Alignment and Check Out. The procedure

1/ Adaptations of the basic prediction method for each of the earlier stages of the product development cycle are detailed in MIL-M-23313A and NAVSHIPS 94324. These include: Early Conceptual, Equipment Planning, Early Development and Late Development Stages.

Source: https://assist.dla.mil -- Downloaded: 2017-02-16T09:13Z
Check the source to verify that this is the current version before use.

also assumes that each of the maintenance task times are a function of the method and level of repair. For example, it is postulated that it should take longer to replace a part which is wired than is required to replace a part which is plugged in. Also that at the part level of repair it takes longer to perform a repair task than at the subassembly or equipment level because less time is required for the discrete steps involved at the latter levels. Accordingly, nine functional levels of repair are described. These are: System, Subsystem, Equipment, Group, Unit, Assembly, Subassembly, Stage and Part.

In summary the assumptions and philosophy of this procedure are applied in predicting either corrective maintenance measured in hours, or active maintenance time consisting of corrective and preventive maintenance measured in man-hours. The techniques of application are described in 2.0 and 3.0.

1.2 Applicability

This procedure can be applied to predict the corrective maintenance time, as outlined in Part A, and the active maintenance time, as described in Part B, of shipboard and shore electronic equipment and systems. It can also be used to predict the maintainability of comparable equipments and systems of other branches of the armed services provided there is similarity of design, use and application.

This procedure may also be applied to predict the maintainability of mechanical equipments or systems if the maintenance task times for the applicable functional levels can be established. 1/

1.3 Point of Application

The maintainability prediction methods described in this procedure are applicable only during the final design stage.

1.4 Basic Parameters of Measure

The basic parameters of measure which are applicable to this procedure are as follows:

1.4.1 Corrective Maintenance (Part A)

The basic measure of maintainability for this method is the Equipment Repair Time (ERT) expressed in hours.

1/ For definitions of maintenance tasks and functional levels, see 2.0 entitled Analytic Foundation.

Source: https://assist.dla.mil -- Downloaded: 2017-02-16T09:13Z
Check the source to verify that this is the current version before use.

The ERT is defined as the median of individual repair times and is expressed by specific formulations for various statistical distributions as follows:

(a) When repair times follow a normal distribution the basic parameter of measure is the Mean Time to Repair (MTTR). Since for this distribution, the median is equal to the mean, the MTTR is a satisfactory measure of the true ERT. The ERT is therefore equal to the MTTR and is expressed as follows:

$$ERT = \frac{\sum (\lambda R_p)}{\sum \lambda} = MTTR \qquad (2\text{-}1)$$

where: λ = average part failure rate in failures per 10^6 hours.

R_p = repair time required to perform a corrective maintenance action in hours.

(b) When repair times follow an exponential distribution:

$$ERT = 0.69\ MTTR \qquad (2\text{-}2)$$

(c) When repair times follow a log-normal distribution of repair times:

$$ERT = \frac{MTTR}{\text{antilog}\ (1.15\ \sigma^2)} \qquad (2\text{-}3)$$

where: σ is the standard deviation of the logarithms, to the base 10 of repair times. The average value of σ is approximately 0.55 in which case:

$$ERT = 0.45\ MTTR \qquad (2\text{-}4)$$

(d) When repair times follow a log-normal distribution the geometric mean time to repair ($MTTR_G$) occurs at the median, therefore it is a measure of ERT.

The geometric mean time to repair ($MTTR_G$) is:

$$MTTR_G = \text{antilog}\ \frac{\sum (\lambda \log R_p)}{\sum \lambda} \qquad (2\text{-}5)$$

Source: https://assist.dla.mil -- Downloaded: 2017-02-16T09:13Z
Check the source to verify that this is the current version before use.

1.4.2 Corrective Maintenance (Part B)

The applicable formulation to obtain the mean corrective maintenance time ($\overline{M}_c$) in man-hours is:

$$\overline{M}_c = \frac{\sum (\lambda M_c)}{\sum \lambda} \tag{2-6}$$

where: λ = average part failure rates in failures per 10^6 hours.

M_c = the man-hours required to perform a corrective maintenance task. (Corrective Maintenance Time)

1.4.3 Preventive Maintenance (Part B)

The mean preventive maintenance time ($\overline{M}_p$) is expressed in terms of mean man-hours and is equated as:

$$\overline{M}_p = \frac{\sum (f M_p)}{\sum f} \tag{2-7}$$

where: M_p = the man-hours required to perform a preventive maintenance action. (Preventive Maintenance Time)

f = the frequency of occurrence of preventive maintenance actions per 10^6 hours.

1.4.4 Active Maintenance (Part B)

This parameter is expressed as the mean active maintenance time which is the sum of the preventive and corrective maintenance man-hours required to maintain a product for a specified period, divided by the total number of preventive and corrective maintenance tasks required during that time. Mathematically it is expressed as follows:

$$M = \frac{(\sum \lambda)\, \overline{M}_c t_i + (\sum f)\, \overline{M}_p t_j}{\sum \lambda t_i + \sum f t_j} \tag{2-8}$$

Source: https://assist.dla.mil -- Downloaded: 2017-02-16T09:13Z
Check the source to verify that this is the current version before use.

where: $\overline{M}$ = mean active maintenance time

$\overline{M}_c$ = mean corrective maintenance time (resulting from time, t_i)

$\overline{M}_p$ = mean preventive maintenance time (during time, t_j)

$\sum\lambda$ = the sum of the part failures rates

$\sum f$ = the sum of the frequency of occurrences of preventive maintenance tasks.

t_i = operating time during the period t_j

t_j = calendar time in operating inventory

1.4.5 Maintainability Index (MI)

The total maintenance effort required to maintain a product in operational status per unit of operating time is expressed as:

$$MI = \frac{(\sum\lambda)\ \overline{M}_c t_i + (\sum f)\ \overline{M}_p t_j}{t} \qquad (2\text{-}9)$$

where: t = operating time

$\overline{M}_c$, $\overline{M}_p$, t_i, t_j, $\sum\lambda$, $\sum f$ have been previously defined.

1.5 Information Required to Apply This Procedure

Since this procedure is applicable to predict maintainability during the final design stage, pertinent functional level and design details must be available. These will include but are not necessarily restricted to the following:

(a) Packaging: The equipment packaging arrangement must be known to the extent that a detailed breakdown into the various equipment groups, units, assemblies, subassemblies, and parts can be determined.

Source: https://assist.dla.mil -- Downloaded: 2017-02-16T09:13Z
Check the source to verify that this is the current version before use.

(b) Diagnostics: The diagnostic procedure that would be followed in the event of failure of each part in the equipment, including application of all designed fault location features, must be available.

(c) Repair Methods: The repair methods that will be used to correct failure of each part must be known.

(d) Parts Listing: A complete listing of all parts categorized by equipment subdivision is required.

(e) Stresses: Electrical and environmental stresses under which each part will operate.

(f) Mounting: The method by which each individually replaced part, and each replaceable subassembly, assembly, or unit is mounted must be known.

(g) Functional Levels: The functional levels at which alignment and checkout are performed, following the replacement of each part, must be known.

1.6 Data Basis

Part A utilizes tabulated data compiled as a result of over 300 observations of maintenance activity in the U. S. fleet. These data in the form of corrective maintenance task times, as shown in Table 2-2, are the basic data used for predictions of active repair times.

Part B, depends on the establishment of equipment maintainability parameters based on experience since this method of predicting active maintenance times does not utilize tabulated data of maintenance task times. Where experience information is lacking, estimates are required of the minimum permissible values of equipment maintainability parameters to assure that the operational requirements can be achieved with:

(a) the planned operating and maintenance equipment

(b) the designated and planned maintenance personnel

1.7 Correlation Between Predicted and Observed Values

A validation study carried out on the AN/URC-32 Transceiver and the AN/SRT-16 Transmitter showed good correlation between predicted and observed corrective

Source: https://assist.dla.mil -- Downloaded: 2017-02-16T09:13Z
Check the source to verify that this is the current version before use.

maintenance results. These equipments were being utilized in many ship types from destroyers to submarines.

2.0 ANALYTIC FOUNDATION

Active Maintenance time consists of two basic components, namely, Corrective and Preventive Maintenance time. Corrective Maintenance is the Maintenance performed to restore an item to a satisfactory condition by providing correction of a malfunction which has caused degradation of the item below the specified performance. Preventive Maintenance is the maintenance performed to retain an item in satisfactory operational condition by providing systematic inspection, detection, and prevention of incipient failures. Preventive Maintenance can be either scheduled or unscheduled depending upon the requirements of the mission.

Active Maintenance Prediction assesses the average man-hours of work to perform the required corrective and preventive maintenance tasks. These active maintenance tasks do not consider the effects on elapsed maintenance time due to logistics problems or administrative procedures. The active repair time estimate of corrective maintenance predicts the downtime due to active repair which is the result of a malfunction causing system downtime. The preventive maintenance time estimate, on the other hand, predicts the downtime due to preventive maintenance activities.

2.1 Basic Considerations and Definitions

2.1.1 Applicable Maintenance Tasks

The corrective maintenance action is divided into the following corrective maintenance tasks:

(a) Localization - Determining the location of a failure to the extent possible, without using accessory test equipment.

(b) Isolation - Determining the location of a failure to the extent possible, by the use of accessory test equipment.

(c) Disassembly - Equipment disassembly to the extent necessary, to gain access to the item that is to be replaced.

(d) Interchange - Removing the defective item and installing the replacement.

Source: https://assist.dla.mil -- Downloaded: 2017-02-16T09:13Z
Check the source to verify that this is the current version before use.

(e) Reassembly - Closing and reassembly of the equipment after the replacement has been made.

(f) Alignment - Performing any alignment, minimum tests and/or adjustment made necessary by the repair action.

(g) Check Out - Performing the minimum checks or tests required to verify that the equipment has been restored to satisfactory performance.

2.1.2 Applicable Functional Levels

(a) Part - One piece, or two or more pieces joined together, which are not normally subject to disassembly without destruction of designed use. (Examples: electron tube, resistors, mica capacitor, audio transformer). A part may be a replaceable item.

(b) Stage - A combination of two or more parts which form a portion of a subassembly. A stage is usually considered as one tube or transistor, together with its directly associated parts. (Examples: amplifier stage, detector stage). In certain cases a stage might contain two or more directly associated tubes or transistors such as in the case of a push-pull amplifier stage or binary counter stage. A stage is not a replacement item itself. If an entire stage is replaced, the replaceable item is termed a subassembly, assembly or unit.

(c) Subassembly - Two or more parts which form a portion of an assembly and which is replaceable as a whole, but having a part or parts, which are individually replaceable. (Example: IF Strip, terminal board with mounted parts).

(d) Assembly - A number of parts, or subassemblies, or any combination thereof joined together to perform a specific function and replaceable as a whole. (Example: audio-frequency amplifier). The distinction between an assembly and a subassembly is not always exact. An assembly in one instance might be a subassembly in another where it forms a portion of an assembly.

(e) Unit - Any combination of parts, subassemblies and assemblies mounted together, normally capable of independent operation in a variety of situations. (Example: electronic power supply, radio receiver). A unit is normally directly accessible (e.g., mounted

Source: https://assist.dla.mil -- Downloaded: 2017-02-16T09:13Z
Check the source to verify that this is the current version before use.

on the front panel) and can be removed without prior disassembly of the equipment or group. A unit may be a replaceable item.

(f) Group - A collection of units, assemblies, or subassemblies which is a subdivision of an equipment (set) or system, but which is not capable of performing a complete operational function. (Example: antenna group, indicator group). A group is not normally a replaceable item.

(g) Equipment (Set) - One or more units and necessary assemblies, subassemblies, and parts connected or associated together and including all necessary cabling and accessories to perform an operational function. (Example: radio receiving set, sound measuring set, radar set). An equipment is not normally a replaceable item.

(h) Subsystem - A combination of equipments, groups, etc., which perform an operational function within a system. Subsystems form the major subdivision of a system. (Example: one station of a communications system). A subsystem is usually located on one ship, or in one geographical location.

(i) System (Electrical - Electronic) - A combination of two or more subsystems or equipment, generally physically separated when in operation, and such other assemblies, subassemblies, and parts as are necessary to perform an operational function. (Example: communications system including all stations; fire control system including the tracking radar, computer and gun mount).

2.1.3 Replaceable Item

A unit, assembly, subassembly, or part which is normally intended to be replaced during corrective maintenance upon failure of the item.

2.2 Principles of the Maintainability Prediction Procedure

The maintainability prediction method described in this procedure depends upon utilizing the estimated maintenance task times required for performing the specific maintenance tasks which, in total, comprise a repair or maintenance action. These maintenance task times may be obtained from tabulations,

Source: https://assist.dla.mil -- Downloaded: 2017-02-16T09:13Z
Check the source to verify that this is the current version before use.

such as Table 2-2, of Part A of this prediction procedure or they may be estimated times as described in Part B. The sum of the maintenance task times is then multiplied by the failure rate, expressed in failures per 10^6 hours to obtain an estimate of the number of maintenance hours required for that specific maintenance or repair action. The mean value is then determined by summing the number of maintenance hours and dividing by the sum of the failure rates.

A similar procedure is followed for preventive maintenance except that, in this case, instead of using failure rate parameters, frequency, (f) is used which is a measure of the number of preventive maintenance actions for a similar period of 10^6 hours. Hence the mean preventive maintenance action time is the sum of the product of frequency and preventive maintenance time divided by the sum of the frequencies.

The symbols which are used for corrective and active maintenance are explained in 3.0 which describes the application of this procedure.

Failure rates for use in performing a maintainability prediction may be obtained from, but are not necessarily restricted to the following:

(a) "Handbook for Prediction of Shipboard and Shore Electronic Equipment Reliability", NAVSHIPS 93820, Naval Ships Systems Command.

(b) "Reliability Stress and Failure Rate Data for Electronic Equipment" Military Standardization Handbook, MIL-HDBK-217.

Through the use of this procedure quantitative predictions of maintainability can be obtained in hours or in man-hours depending on which units of measure are used for the maintenance action time.

3.0 APPLICATION

The application of the techniques outlined for both corrective and active maintenance prediction are described in Part A and Part B which follow:

3.1 PART A Corrective Maintenance Prediction Procedure

As stipulated in 1.0, General, this procedure is only concerned with the final design stage phase of the product development cycle. The earlier and intermediary design stages are not treated in this procedure. The prediction procedures for these phases of the product development cycle are included in NAVSHIPS 94324 and MIL-STD-470.

Source: https://assist.dla.mil -- Downloaded: 2017-02-16T09:13Z
Check the source to verify that this is the current version before use.

3.1.1 Maintainability Prediction During Final Design Stage

This procedure is intended to predict maintainability at the final design stage. It takes into account all of the pertinent functional level and details available, and is applicable when the information listed in 1.5 is available.

3.1.1.1 Prediction Procedure

This maintainability prediction procedure involves determining the detailed functional level breakdown of the equipment, establishing the functional levels at which maintenance features are effective, and at which maintenance tasks will be performed, and performing the prediction based on equipment design features and approximate part failure rates.

3.1.1.2 Determining Functional Levels of the Equipment or System

The first step in the procedure is to determine the functional level breakdown of the equipment or system. This is done by dividing the equipment or system into its various physical subdivisions beginning with the highest subdivision and continuing down to the items such as parts, subassemblies, assemblies or units that will be replaced in corrective maintenance. The various functional levels or subdivisions (part, stage, subassembly, assembly, unit, group, equipment, subsystem and system) of concern are defined in paragraph 2.1.2.

The functional level breakdown is most easily established and certain determinations required during the prediction are more easily made if a functional level diagram similar to that shown in Figure 2-1 is prepared. A hypothetical communications system is subdivided into its various subsystems, equipments, groups, etc., down to the items that will be replaced during corrective maintenance. Each branch of the diagram is terminated with a circle which indicates the item or items that will be replaced to correct malfunctions existing in that branch.

The connecting lines indicate physical relationships and not electrical or operational connections. In preparing such a diagram, care must be exercised in establishing the appropriate functional levels for the various subdivisions, especially where an item may have a nomenclature that includes the name of one of the functional levels (e.g., "Power Amplifier Assembly"). In some instances, the functional level location of an item may not be the same as the nomenclature indicates.

Source: https://assist.dla.mil -- Downloaded: 2017-02-16T09:13Z
Check the source to verify that this is the current version before use.

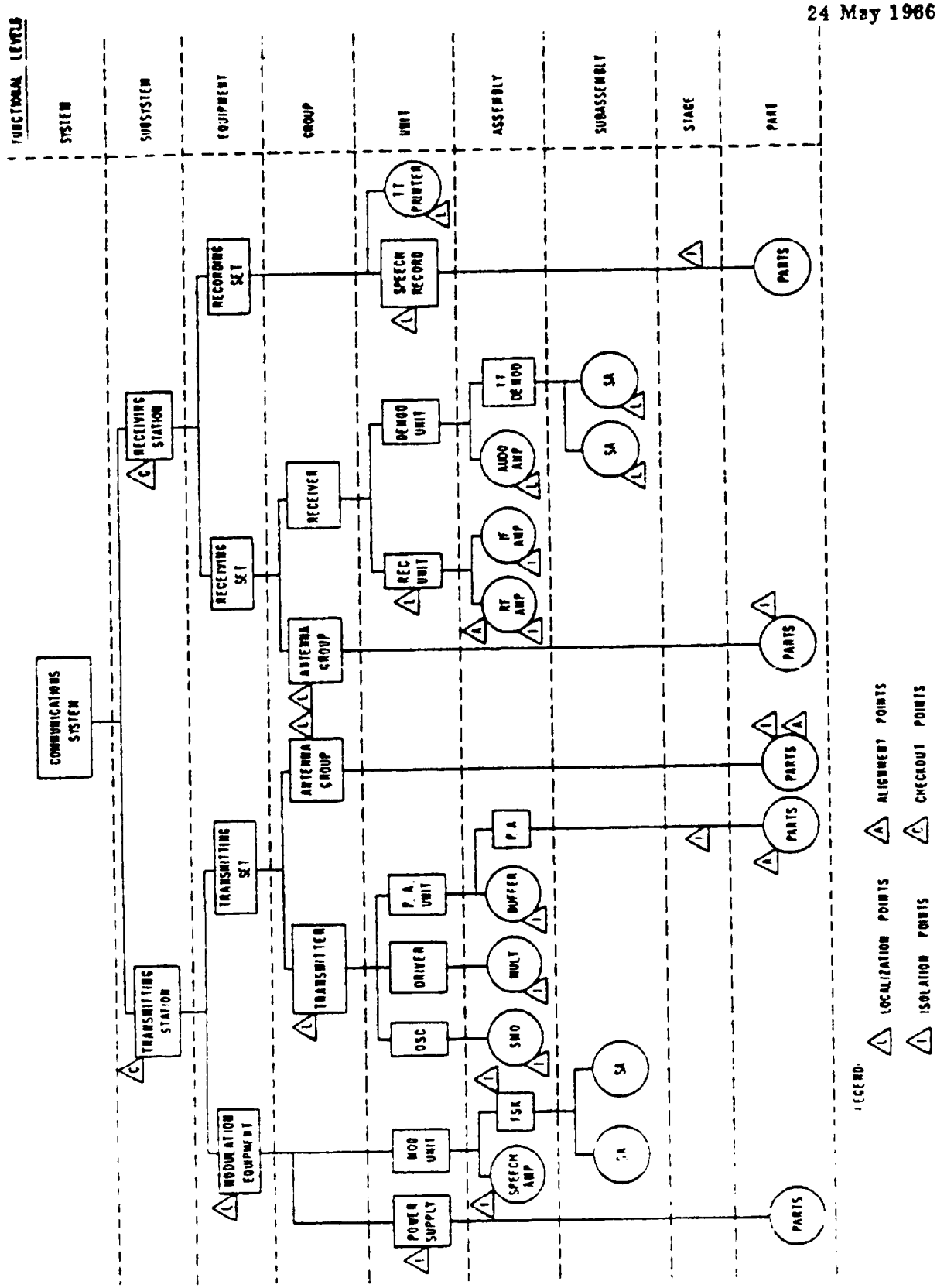

Figure 2-1. Functional Level Diagram of a Typical Communications System

Source: https://assist.dla.mil -- Downloaded: 2017-02-16T09:13Z
Check the source to verify that this is the current version before use.

3.1.1.3 Determining Functional Levels at Which Maintenance Features Are Effective

After the functional level breakdown has been established and a functional level diagram prepared, the functional levels at which localization, isolation, access, alignment, and checkout features are applicable should be determined based on the overall characteristics of the design.

The functional levels at which features for localization, isolation, alignment, and checkout are effective for each replaceable item can be indicated on the functional level diagram as shown by the symbols Δ in Figure 2-1. The access functional level can be determined directly from the functional level diagram as indicated in c below, therefore, a symbol identifying it is not required. The functional level at which each of these features is effective is determined and shown in the functional level diagram as follows:

(a) Localization: The functional level to which a failure can be located without using accessory test equipment is indicated by Δ.

(b) Isolation: The functional level to which a failure can be located using accessory test equipment at designed test points is indicated by Δ. If there are no designed test points below the localization functional level, then isolation is assumed to be effective at the same functional level as localization.

(c) Access: The access functional level for a replaceable item is that level to which disassembly must be accomplished in order to gain access to the item that is to be replaced, and from which reassembly must be accomplished after replacement of the item. This can be determined directly from the functional level diagram as the functional level of the first rectangular block above the replaceable item. For example, in Figure 2-1, to replace a part in a modulator power supply access must be gained to the unit level, and to replace a subassembly of the TT Demod assembly access must be gained to the assembly level.

(d) Alignment: The functional level from which alignment must begin following replacement of a variable item such as potentiometers; or following replacement of subassemblies, assemblies, or units containing tuning drives, mechanical couplings or other major adjustable devices is indicated by Δ.

(e) Checkout: The functional level at which restoration to normal services is to be verified using self-test or other testing facilities is indicated by Δ.

Source: https://assist.dla.mil -- Downloaded: 2017-02-16T09:13Z
Check the source to verify that this is the current version before use.

3.1.1.4 Prediction

The actual prediction is performed using a worksheet such as that shown in Figure 2-2. These sheets are prepared according to the instruction below for the appropriate columns.

Step (1). "Item" Indicate the item being covered by the worksheet. When individual parts are replaced indicate the item which directly contains the replaceable part. When modular subassemblies, assemblies, or units are replaced, indicate the item that is being replaced.

Step (2). "Method of Repair" Indicate the type of item that will actually be replaced to eliminate a malfunction.

Step (3). "Circuit Designation" List the circuit designation (e.g., V101) of each part in the item designated at the top of the worksheet, with the exception of the following categories which should not be listed:

Mechanical hardware such as:

gear trains	chassis rollers
clutches (mechanical)	screws
bearings	nuts
cams	washers
dials and registers	tube shields

Electrical hardware such as:

feed-through terminals	wiring harnesses
terminal studs	sockets for plug-in parts or subassemblies
wiring	terminal boards
cables	printed wiring boards (board only)

When the worksheet covers a replaceable modular subassembly, assembly, or unit, begin the list on the second row of the column.

Source: https://assist.dla.mil -- Downloaded: 2017-02-16T09:13Z
Check the source to verify that this is the current version before use.

1. ITEM _____
2. METHOD OF REPAIR Replace-Parts ☐ Subassembly ☐ Assembly ☐ Unit ☐ SHEET _____ of _____

3 Circuit Designation	4 Part Type	5 Failure Rate λ	MAINTENANCE TASK TIMES							13 R_p	14 λR_p	15 $\log R_p$	16 $\lambda \log R_p$
			6 Localization	7 Isolation	8 Disassembly	9 Interchange	10 Reassembly	11 Alignment	12 Checkout				

Step (4). "Part Type" List the identifying names or type designations of all parts opposite their respective circuit designations. When the worksheet covers a replaceable modular subassembly, assembly, or unit, enter the designation of the replaceable item in the top row of the column followed by the designation of each part.

Step (5). "Failure Rate" List the failure rate λ, of each part opposite the appropriate part designation. The failure rate for each part and tube in the equipment can be determined by use of standard reliability prediction methods with applicable electrical and thermal stress conditions considered. Failure rate data should be taken from sources which consider only true random catastrophic failures associated with normal equipment operation. Suitable references for failure rate data were listed in 2.2.

When using these references care should be exercised in not mixing failure rate data of one with the other. Once a selection has been made this same reference should be used throughout unless other failure rate data not included therein is required. In this case other sources may be used if justified and approved.

Determine the sum of the λ values listed and record this value in the "sum" space at the bottom of the "λ" column.

Step (6). "Maintenance Task Times" (Columns 6, 7, 8, 9, 10, 11 and 12). For individually replaced parts determine the maintenance task times through the use of Table 2-2. For each part, record these task times in the appropriate columns opposite the respective part designations. For replaceable modular subassemblies, assemblies, or units, determine a single time interval for each maintenance task for the overall replaceable item and record each time interval in the top row of the appropriate maintenance task column. Table 2-2 provides charts for determining maintenance task times for the localization, isolation, disassembly, reassembly, alignment, and checkout tasks. Interchange time is determined through the use of work factor data as shown in Tables 2-3 and 2-4.

The use of the charts in Table 2-2 requires determining the specific "functional level" within the equipment at which all maintenance features are effective. As used in this procedure, "functional level" denotes the physical subdivisions of electronic equipment at which diagnostic, replacement, and test features are effective. The functional levels under consideration are: 1) part, 2) stage, 3) subassembly, 4) assembly, 5) unit, 6) group, 7) equipment, 8) subsystem, and 9) system.

Source: https://assist.dla.mil -- Downloaded: 2017-02-16T09:13Z
Check the source to verify that this is the current version before use.

TABLE 2-1

AVERAGE PARTS FAILURES PER PART PER 10^6 HOURS BY PART CATEGORY 1/

Part Category	Failures/10^6 Hours	Part Category	Failures/10^6 Hours
Capacitors		Rectifiers (Power Selenium)	2.98
Fixed			
Ceramic, Feed-Thru	2.06	Relays	2.86
Ceramic, (Other Than Feed Thru)	0.57	Resistors	
Electrolytic	2.48	Fixed	
Mica	0.46	Carbon Composition	0.36
Paper	0.50	Carbon Film	0.39
		Metal Film	0.51
Variable		Other Film	0.60
Air	0.13	Wire Wound	1.40
Ceramic	0.087		
Plastic	0.00045	Variable	
Vacuum	3.08	Composition	0.42
		Wire Wound	0.84
Connectors	0.058		
		Resolvers	25.47
Counters, Mechanical (Tally Register Type)	4.54	Sockets	0.042
Crystals, Diode (Signal Detector and Mixer)	2.98	Switches	0.48
		Synchros	1.80
Crystals, Frequency	1.36	Transformers	1.16
Hardware		Transistors	1.03
Electrical	0.033		
Mechanical	0.092	Tubes, Electron	
		Crt	24.66
Inductors (Deflection, Focus, Pulse, Filter, R. F. Coils)	0.28	Magnetrons	544.54
		Receiving (including VR Tubes)	9.42
Meters		Special Purpose and Transmitting (includes ATR, TR, Klystron, Thyratron)	42.88
Electrical	1.36		
Mechanical	2.19		
Motors		Vibrators (Chopper)	32.18
Blower	2.85		
Resolver	25.47		
Synchro	1.80		
Other	5.84		

1/ Reproduced from Handbook for the Prediction of Shipboard and Shore Electronic Equipment Reliability NAVSHIPS 93820.

Source: https://assist.dla.mil -- Downloaded: 2017-02-16T09:13Z
Check the source to verify that this is the current version before use.

The charts in Table 2-2 are used in the following manner:

The appropriate chart, TUBES or PARTS, is selected depending on the type of item to be replaced. The application notes for the charts define the specified types of items each chart applies to.

To obtain localization and isolation time, the chart is entered using the FUNCTIONAL LEVELS column headed by the type of replacement that will be made. For example, replacement of a part would indicate Column 1, a stage; Column 2, a subassembly; Column 3, etc. To obtain disassembly, reassembly, alignment, and checkout times, the chart is entered using Column 1 only.

The appropriate corrective maintenance task column is determined by the type of maintenance task being considered.

The row for the maintenance task time is found by determining the functional level at which maintenance features are effective, or at which each corrective maintenance task is performed.

Special limitations, regarding specific application of the information and data in Table 2-2 are detailed in the application notes associated with the table. The average maintenance task times shown in the PARTS chart are not applicable to mechanical devices such as gear trains and bearings. In addition, the interval between the time a malfunction occurs and the time that an operator or maintenance technician becomes aware of it has been excluded.

Examples

The following examples are presented to demonstrate the use of Table 2-2:

(1) The Modulator Power Supply, illustrated in the Functional Level Diagram of Figure 2-1, is demonstrated in this example because of its apparent localization and isolation features. From the Functional Level Diagram, localization for the power supply is determined to be effective at the Equipment Level. Considering the Power Supply to be a plug-in chassis, then the Tubes Chart of Table 2-2 is used. Since the Power Supply is located at the Unit Level where failure can be removed and localization is effective at the Equipment Level, then the chart is entered from the unit Column (5) down to the intersection of the Equipment row. This row is then carried over to the intersection with the localization column where the maintenance task time is read as 0.037 hours.

Source: https://assist.dla.mil -- Downloaded: 2017-02-16T09:13Z
Check the source to verify that this is the current version before use.

TABLE 2-2

MAINTENANCE TASK TIMES (Sheet 1 of 2)

ITEMS [a]

AVERAGE TIME [d] (HOURS) TO PERFORM CORRECTIVE MAINTENANCE TASKS FOR ELIMINATING EQUIPMENT OR SYSTEM MALFUNCTION CAUSED BY ITEM FAILURE

FUNCTIONAL LEVELS — FOR DETERMINING LOCALIZATION AND ISOLATION TIME USE COLUMN BEGINNING WITH THE FUNCTIONAL LEVEL THROUGH WHICH FAILURE IS REMOVED [f]									CORRECTIVE MAINTENANCE TASKS					
									DIAGNOSIS		REPLACEMENT [f]		TEST	
9	8	7	6	5	4	3	2	1	Localization	Isolation [c]	Disassembly	Reassembly	Alignment	Checkout [g]
System	Subsystem	Equipment	Group	Unit	Assembly	Subassembly	Stage	Part	0.021 [e]	0.265 [e]	[illegible]	0.438	[illegible]	0.175
None	System	Subsystem	Equipment	Group	Unit	Assembly	Subassembly	Stage	0.029	0.115	0.211	0.362	[illegible]	0.167
	None	System	Subsystem	Equipment	Group	Unit	Assembly	Subassembly	0.037	0.184	0.185	0.262	[illegible]	[illegible]
		None	System	Subsystem	Equipment	Group	Unit	Assembly	0.045	0.508	0.122	0.191	[illegible]	[illegible]
			None	System	Subsystem	Equipment	Group	Unit	0.053	0.636	0.094	0.136	0.021	[illegible]
				None	System	Subsystem	Equipment	Group	0.063	1.776	0.071	0.080	[illegible]	0.124
					None	System	Subsystem	Equipment	0.075	0.987	0.049	0.063	[illegible]	[illegible]
						None	System	Subsystem	0.090	1.094	0.032	0.037	[illegible]	0.081
							None	System	0.107	1.305	0.016	0.017	[illegible]	0.082
								None	0.125	1.548	0.000	0.000	0.000	0.000

PARTS [a]

AVERAGE TIME [d] (HOURS) TO PERFORM CORRECTIVE MAINTENANCE TASKS FOR ELIMINATING EQUIPMENT OR SYSTEM MALFUNCTION CAUSED BY PART FAILURE

FUNCTIONAL LEVELS — FOR DETERMINING LOCALIZATION AND ISOLATION TIME USE COLUMN BEGINNING WITH THE FUNCTIONAL LEVEL THROUGH WHICH FAILURE IS REMOVED [f]									CORRECTIVE MAINTENANCE TASKS					
									DIAGNOSIS		REPLACEMENT [b]		TEST	
9	8	7	6	5	4	3	2	1	Localization	Isolation [c]	Disassembly	Reassembly	Alignment	Checkout [g]
System	Subsystem	Equipment	Group	Unit	Assembly	Subassembly	Stage	Part	0.021 [e]	0.772 [e]	[illegible]	1.348	[illegible]	[illegible]
None	System	Subsystem	Equipment	Group	Unit	Assembly	Subassembly	Stage	0.039	[illegible]	0.374	0.561	0.077	[illegible]
	None	System	Subsystem	Equipment	Group	Unit	Assembly	Subassembly	0.056	[illegible]	[illegible]	0.262	0.045	0.150
		None	System	Subsystem	Equipment	Group	Unit	Assembly	0.073	1.569	[illegible]	[illegible]	0.070	0.149
			None	System	Subsystem	Equipment	Group	Unit	[illegible]	1.700	[illegible]	[illegible]	[illegible]	[illegible]
				None	System	Subsystem	Equipment	Group	0.106	1.921	[illegible]	0.090	0.015	[illegible]
					None	System	Subsystem	Equipment	0.121	1.924	[illegible]	0.061	0.010	[illegible]
						None	System	Subsystem	0.136	2.022	[illegible]	0.037	0.007	0.091
							None	System	0.150	2.100	[illegible]	[illegible]	[illegible]	0.062
								None	[illegible]	[illegible]	[illegible]	[illegible]	0.000	[illegible]

Source: https://assist.dla.mil -- Downloaded: 2017-02-16T09:13Z
Check the source to verify that this is the current version before use.

TABLE 2-2 (Continued)

APPLICATION NOTES AND DEFINITIONS

NOTES (see superscript letters on sheet 1)

a.

1. The average task times in the TUBES chart should be applied to front panel fuses, encased plug-in modular subassemblies, plug-in crystals, and tubes (excluding special purpose tubes).

2. The average task times in the PARTS chart should be applied to fuses not on the front panel, transistors, special purpose tubes (magnetrons, klystrons, etc.), wired in non-sealed modules, and all electronic parts (resistors, capacitors, inductors, transformers, etc.).

b. The total replacement time should include disassembly time, interchange time and reassembly time. However, since an average interchange time applicable to all situations is difficult to obtain, it has not been included in the tabulated average task time. Interchange time must be determined from Table 1-3-13.

c.

1. Specific techniques are used to isolate tube failures. The designer must consider these techniques in determining R_p for tubes.

   (a) Test points are normally not used to isolate tube failures.

   (b) The most common method of isolating tube failures during corrective maintenance is by substitution of a known good tube for the suspected tube. Although isolation features may be effective at the unit or assembly level, tube isolation can be accomplished at the tube or stage level through substitution means without using test points.

   (c) Some tube failures (open filaments, broken envelope, etc.) can be located visually; however, this is true in only a very small percentage of cases.[1/]

2. Because the task durations were derived from field data, this isolation time includes the tube checks, etc., the electronic technician usually makes before deciding to use test points and point-to-point checks. This average time also accounts for the point-to-point checks which would usually be required to isolate a failed part.

d. The average time intervals in this chart do not include administrative time. Administrative time consists of time expended in part procurement (time spent by maintenance personnel in obtaining replacement items) and in non-technical shipboard routine (inspection, eating, other military duties, etc.).

e. When equipment maintenance features enable localization to the functional level through which failure is being removed (the top row of FUNCTIONAL LEVELS columns), do not use the value shown in the ISOLATION column at this functional level, instead use 0.000 hours.

f. To determine the time for the disassembly, reassembly, alignment and checkout tasks, the designer should only use column 1 of FUNCTIONAL LEVELS in the appropriate row at which the task is performed.

g. To properly approximate the checkout time, enter column 1 at the functional level at which the checkout is being made and multiply by the number of operational modes affected by the replaced functional level.

1/ A study made at the Federal Electric Corporation of 762 tube replacements in one type of shipboard transmitter indicated that only 50 failures (7%) could possibly have been located through visual means.

Source: https://assist.dla.mil -- Downloaded: 2017-02-16T09:13Z
Check the source to verify that this is the current version before use.

(2) Similarly, isolation for the Power Supply is determined to be effective at the Unit Level from the Functional Level Diagram, Figure 2-1. Thus entering the Tube Chart of Table 2-2 in the Unit Column (5) to the Unit Level row intersects at the top row. Carrying this row over to the intersection with the Isolation column presents a maintenance task time reading of 0.265 hours.

(3) If an equipment must be disassembled to the unit level to replace an assembly, the disassembly time will be 0.094 hours. This time is obtained by locating the intersection of the UNIT row of Column 1 of functional levels, and the DISASSEMBLY column. Note that functional levels Column 1 is used in all cases except localization and isolation.

Step (7). "Interchange Time" This time can be obtained from Table 2-3 for most types of tubes and replaceable items. For items having mounting methods not conforming to the description given in Table 2-3, the interchange times can be determined from Table 2-4.

In determining the interchange time from Table 2-4, each detailed step (unsolder joint, remove unit, etc.) involved in removing a failed item and in positioning and attaching a new item must be accounted for with a specific element time interval. The same time interval for an attaching step can be used as an approximation for a corresponding detaching step. The interchange time for an item is equal to the sum of all time intervals. An example of determining interchange time for a part is shown in Table 2-5.

Step (8). "R_p" Determine the repair time (R_p) required for performing a single corrective maintenance action in the case of failure of each replaceable item by adding the values recorded on the worksheet in Columns 6 through 12.

For individually replaced parts, R_p is determined independently for each part, and is recorded in the "R_p" column of the worksheet opposite the respective part designation.

For replaceable modular subassemblies, assemblies, or units, R_p is determined once for the overall replaceable item, and is recorded on the worksheet in the top row of the "R_p" column.

Step (9). "λR_p" When individual parts are replaced, multiply each recorded part failure rate (λ) by the respective value of R_p, and record the product in the "λR_p" column opposite the respective part designation.

Source: https://assist.dla.mil -- Downloaded: 2017-02-16T09:13Z
Check the source to verify that this is the current version before use.

TABLE 2-3

INTERCHANGE TIME

TUBES AND FUSES	
PART TYPE	AVERAGE TIME (HOURS)
Plug-in tubes	0.015
Wired tubes (4 wires)	0.149
Wired tubes (more than 4 wires)	0.149 + 0.034 per wire over 4
All tubes with shield with clamp with cap	ADD 0.007 ADD 0.027 ADD 0.007
Plug-in fuses	0.010
Screw-in fuses	0.015
All fuses with screw cap	0.014

PARTS OTHER THAN TUBES AND FUSES	
PART TYPE	AVERAGE TIME (HOURS)
Parts with 2 wires or 2 tabs to be soldered	0.081
Parts with more than 2 wires or 2 tabs to be soldered with clamp	0.081 + 0.034 per wire over 2 ADD 0.027
Parts attached with screws, nuts, and washers	ADD 0.022 for each screw, nut and washer combination
NOTE: For attachments not conforming to the above type determine the interchange time by using work factor data, Table 2-13	

Source: https://assist.dla.mil -- Downloaded: 2017-02-16T09:13Z
Check the source to verify that this is the current version before use.

TABLE 2-4

ELEMENT TIMES BASED ON THE WORK FACTOR SYSTEM

ELEMENT DESCRIPTION	ELEMENT TIME* (Hours)
1. PLUG-IN'S (includes handling)	
Pin-type tubes, plug-in parts, etc.	0.0075
Tube cap or shield	0.0035
Fuse	
Insert into horizontal holder	0.0050
Insert into vertical holder	0.0075
2. WIRING AND SOLDERING	
Wire - wrapping and splicing	
Bare copper wire (1) End	0.0150
(2) Ends	0.0237
Jumper wire and cable leads (1) End	0.0134
(2) Ends	0.0265
Part with axial leads (includes part handling)	
(1) End	0.0178
(2) Ends	0.0289
Soldering	
Per joint	0.0058
3. REPLACEMENT WITH HARDWARE	
Replace screw into tapped hole	0.0093
Replace screw through clearance hole	0.0023
Replace washer	0.0018
Replace nut	0.0071
Replace stop nut	0.0210
Replace set screw	0.0075
Apply glyptol screw	0.0018
4. PART HANDLING	
Pull up part and position in chassis for assembly	0.0025
5. PRINTED CIRCUIT WIRING	
Replace (insert)	0.0033/End
Solder	0.0056/End

* The interchange task aboard ship does not involve the repetitive (cyclic) factory type of regularly occurring motions; therefore, these interchange element times are based on non-cyclic and irregularly occurring motions.

Source: https://assist.dla.mil -- Downloaded: 2017-02-16T09:13Z
Check the source to verify that this is the current version before use.

TABLE 2-5

AN EXAMPLE OF THE USE OF ELEMENT TIMES FOR DETERMINING INTERCHANGE TIME

The following example is for a resistor with two (2) tab terminals which are attached to the chassis by two (2) screws, two (2) nuts, and two (2) washers

DETAILED INTERCHANGE STEPS	ELEMENT DESCRIPTION	ELEMENT TIME (Hours)	MULTIPLIED BY	NUMBER TIMES PERFORMED		TIME FOR DETAILED INTERCHANGE STEPS (Hours)
Unsolder joint	Soldering (per joint)	0.0058	x	2	=	0.0116
Disconnect lead	Wire (jumper wire - 1 end)	0.0134	x	2	=	0.0268
Remove nut	Remove nut	0.0071	x	2		0.0142
Remove washer	Remove washer	0.0018	x	2	=	0.0036
Remove screw	Remove screw through clearance hole	0.0023	x	2	=	0.0046
Remove failed resistor	Pull up part and position	0.0025	x	1		0.0025
Position new resistor	Pull up part and position	0.0025	x	1	=	0.0025
Replace screw	Replace screws through clearance hole	0.0023	x	2	=	0.0046
Replace washer	Replace washer	0.0018	x	2	=	0.0036
Replace nut	Replace nut	0.0071	x	2	=	0.0142
Connect lead	Wire (jumper wire - 1 end)	0.0134	x	2	=	0.0268
Solder joint	Soldering (per joint)	0.0058	x	2	=	0.0116
			Hours of Maintenance Per Part Failure		=	0.1266

Source: https://assist.dla.mil -- Downloaded: 2017-02-16T09:13Z
Check the source to verify that this is the current version before use.

When subassemblies, assemblies, or units are replaced, multiply the recorded sum of λ's (from space 17) by the recorded value of R_p.

Determine the sum of the λR_p values listed and record this in the "sum" space at the bottom of the "λR_p" column.

Step (10). "log R_p" List the logarithms of each recorded value of R_p in the "log R_p" column opposite the respective R_p value. Where values of R_p are less than one, the logarithms should be expressed as negative numbers. (For example, log 0.25 = 9.3979 - 10 = -0.6021).

Step (11). "λ log R_p" When individual parts are replaced, multiply each recorded part failure rate (λ) by the respective value of log R_p for that part, record the product in the "λ log R_p" column opposite the appropriate part designation.

When subassemblies, assemblies, or units are replaced, multiply the recorded sum of λ's (from space 17) by the recorded value of log R_p.

Determine the sum of the log R_p values listed and record this in the "sum" space at the bottom of the "λ log R_p" column.

3.1.1.5 Obtaining Predicted Maintainability Parameters

After all worksheets are completed, the data should be consolidated to determine:

(a) Equipment failure rate ($\sum\lambda$). This is the total of all recorded sums of failure rates (the value recorded in space 17 of the worksheet illustrated by Figure 2-2).

(b) $\sum\lambda R_p$ This is the total of all recorded sums of λR_p (space 18).

(c) $\sum\lambda$ log R_p This is the total of all recorded sums of λ log R_p (space 19).

3.1.1.6 Calculations

(a) Mean time to repair (MTTR). The predicted MTTR can now be obtained by the calculation:

$$\text{MTTR} = \frac{\sum\lambda R_p}{\sum\lambda}$$

(b) Geometric mean time to repair (MTTR_G). The geometric mean time to repair, which is the median Equipment Repair Time (ERT) when the repair times are log normally distributed, is calculated as follows:

Source: https://assist.dla.mil -- Downloaded: 2017-02-16T09:13Z
Check the source to verify that this is the current version before use.

$$MTTR_G = \text{antilog}\left[\frac{\sum (\lambda \log R_p)}{\sum \lambda}\right]$$

3.2 PART B Active Maintenance Prediction Procedure

3.2.1 Corrective Maintenance Prediction

The forms which are used to perform a corrective maintenance prediction are shown in Figures 2-3 and 2-4 which are labelled Worksheets A and B, respectively. The step by step procedure is as follows:

(a) Column A, Part Identification: List identifying part numbers, names and type designation of each part.

(b) Worksheet A - Column B, Circuit Designation: List the circuit designation of each part in the product except for the following categories for which no circuit designation shall be listed:

1. Mechanical hardware

2. Electrical hardware such as:

Feed-through terminals
Terminal studs
Wiring
Cables
Wiring harnesses
Sockets for plug-in parts of subassemblies
Terminal boards
Printed wiring boards (board only)

Circuit designations of subassemblies or assemblies (e.g., modular assemblies) that normally will be replaced upon failure of any part contained therein shall be listed separately, followed immediately by the circuit designations of all parts included in that subassembly or assembly. Part listings shall be grouped on worksheets according to product subdivisions (e.g., unit, equipment, set, system, etc).

(c) Column C, Failure Rate: (λ): The failure rate of each part shall be determined in accordance with MIL-STD-756. The failure rate for each part, in part failures per 10^6 hours, shall be listed in Column C

Source: https://assist.dla.mil -- Downloaded: 2017-02-16T09:13Z
Check the source to verify that this is the current version before use.

opposite the respective part identification. For parts with life characteristics measured in units other than time, an operational analysis shall be performed and a λ in part failures per 10^6 hours shall be computed. The sum of all part failure rates ($\sum\lambda$) on each sheet shall be determined and recorded in the space at the bottom of Column C.

(d) Column D, Localization: E, Isolation: F, Disassembly: G, Interchanges: H, Reassembly; J, Alignment: and K, Checkout: List the estimated average time required to perform each of the listed corrective maintenance tasks corresponding to the respective part identification. This may be done by following a sequence of steps, similar to, but not necessarily restricted to the following:

(1) Assuming that each component fails in its most likely mode, note the fault localization features and determine the necessary steps to localize the fault to the module or function. Estimate the average localization time.

(2) Determine the average isolation time by referring to schematics, noting the location of test points and estimate the observations and steps required to isolate the trouble to the failed component.

(3) Note mechanical assembly details by referring to mechanical or assembly drawings, as required, to estimate disassembly time.

(4) Observe the method used to attach a failed component to its mounting surface and perform an analysis to estimate the interchange time.

(5) Refer to mechanical drawings and determine the steps required to reassemble a component to its required state. Estimate the reassembly time.

(6) When alignment or adjustment is required, note the characteristics of the end result and estimate the time required to perform the task. Estimate the alignment time.

(7) Estimate the check-out time by reviewing the minimum established performance procedures.

Source: https://assist.dla.mil -- Downloaded: 2017-02-16T09:13Z
Check the source to verify that this is the current version before use.

(e) Column L, M_c: The sum of the values recorded in Column D, E, F, G, H, J and K shall be determined and recorded in Column L which is headed M_c, the man-hours needed to perform a corrective maintenance task.

(f) Column M, λM_c: The value of each M_c multiplied by the respective value of failure rate (λ) shall be recorded in Column M opposite the respective part identification. The sum of all (λM_c) values on each sheet shall be determined and recorded in the space indicated ($\sum \lambda M_c$) the bottom of Column M.

(g) Worksheet B: Figure 2-4 shows a copy of Worksheet B. This is used to record the results of the summation of ($\sum \lambda$) and ($\sum \lambda M_c$) shown at bottom of Worksheet A. In essence then, the sum of all the entries in Column 2 of Worksheet B, is the sum of all the failure rates ($\sum \lambda$) and represents the failure of the equipment or product and hence is called the "Product Failure Rate". Similarly, the sum of all the ($\sum \lambda M_c$) values appearing at the bottom of Column 3, Worksheet B is the total corrective maintenance downtime per 10^6 hours. Hence by substituting in Equation 2-6 the mean man-hours for corrective maintenance $\overline{M}_c$ is obtained. This equation is repeated for immediate reference.

$$\overline{M}_c = \frac{\sum(\lambda M_c)}{\sum \lambda}$$

3.2.2 Preventive Maintenance Prediction

Worksheets C and D are used to record the data required to calculate the mean man-hours of preventive action $\overline{M}_p$. The forms are illustrated by Figures 2-5 and 2-6. References such as Column "A", Column "B", etc., refer to the respective columns of Worksheet C. References such as "Column 1", Column 2", refer to the respective columns of Worksheet D.

(a) Column A, Description of Preventive Maintenance Tasks: Determine all of the preventive maintenance tasks that must be performed during the service use of the product. A detailed description of each task shall be presented in a separate report. Determine those preventive maintenance tasks which can be performed while the product is operating. Determine the frequency of occurrence and man-hours required to perform each task. The frequency of occurrence, man-hours required, and a statement that the tasks can or cannot be performed while the equipment is operating shall be included in the detailed description of each task. A brief description of each task that cannot be performed while the product is operating shall be listed in Column A.

Source: https://assist.dla.mil -- Downloaded: 2017-02-16T09:13Z
Check the source to verify that this is the current version before use.

(b) Column B, Frequency of Occurrence(f): The frequency of occurrence of each task, listed in Column A, shall be determined using existing data. The frequency of occurrence for each task, in events per 10^6 hours of calendar time shall be listed in Column B opposite the respective task. The sum of all frequencies of occurrence on each sheet shall be determined and recorded in the space at the bottom of Column B.

(c) Column C, M_p: The man-hours required to perform each task shall be determined using existing data. The man-hours required for each task shall be listed in Column C opposite the respective tasks.

(d) Column D, fM_p: The value of each frequency of occurrence multiplied by the respective value of man-hours required shall be recorded in Column D opposite the respective task. The sum of the values appearing in Column D shall be recorded in the space provided at the bottom of Column D.

(e) Worksheet D: The Worksheet C sheet number shall be recorded in Column 1. The sum of each Column B on each Worksheet C shall be recorded in Column 2 opposite the respective Worksheet C sheet number. The sum of each Column D on each Worksheet C shall be recorded in Column 3 opposite the respective Worksheet C sheet number. The sum of all values in Column 2 shall be recorded in the space marked "Frequency of preventive maintenance tasks" at the bottom of the last Worksheet D. The sum of all values in Column 3 shall be recorded in the space marked "Total preventive maintenance time per 10^6 hours of operation" at the bottom of the last Worksheet D.

(f) Calculating $\overline{M}_p$: The mean preventive maintenance time, $\overline{M}_p$ in man-hours is calculated by substituting the data recorded in Worksheet D in equation (2-7) which is repeated for immediate reference, namely:

$$\overline{M}_p = \frac{\sum (fM_p)}{\sum_f}$$

(g) Calculating $\overline{M}$: The mean man-hours of active maintenance which term includes preventive and corrective maintenance is determined from equation (2-8) namely:

Source: https://assist.dla.mil -- Downloaded: 2017-02-16T09:13Z
Check the source to verify that this is the current version before use.

$$\overline{M} = \frac{(\sum\lambda)\,\overline{M}_c t_i + (\sum f)\,\overline{M}_p t_j}{\sum\lambda t_i + \sum f t_j}$$

(h) Calculating MI: The MI (Maintainability Index) shall be calculated by substituting in equation (2-9) which is:

$$MI = \frac{(\sum\lambda)\,\overline{M}_c t_i + (\sum f)\,\overline{M}_p t_j}{t}$$

Source: https://assist.dla.mil -- Downloaded: 2017-02-16T09:13Z
Check the source to verify that this is the current version before use.

Worksheet A

Contractor _____ Date _____

Contract No. _____ Sheet _____ of _____

A Part Identification	B Circuit Designation	C Failure Rate	Average Time to Perform Corrective Maintenance Tasks							L M_c	M λM_c
			D Localization	E Isolation	F Disassembly	G Interchange	H Reassembly	J Alignment	K Check-out		

Worksheet B

Contractor_____ Date_____

Contract No._____ Sheet_____of_____

1 Worksheet A Sheet Number	2 $\sum\lambda$ Column C Total	3 $\sum\lambda M_c$ Column M Total	1 Worksheet A Sheet Number	2 $\sum\lambda$ Column C Total	3 $\sum\lambda M_c$ Column M Total
Subtotals			Subtotals		

Product failure rate, $\sum\lambda$ = Total of column 2 subtotals_____

Total repair time per 10^6 hours, $\sum\lambda M_c$ = Total of column 3 subtotals_____

Figure 2-4 Worksheet B

Source: https://assist.dla.mil -- Downloaded: 2017-02-16T09:13Z
Check the source to verify that this is the current version before use.

Worksheet C

Contractor _____ Date _____

Contract No. _____ Sheet _____ of _____

A Description of Preventive Maintenance Task	B f	C M_p	D fM_p
Σf		ΣfM_p	

Figure 2-5 Worksheet C

Source: https://assist.dla.mil -- Downloaded: 2017-02-16T09:13Z
Check the source to verify that this is the current version before use.

Worksheet D

Contractor_____ Date_____

Contract No._____ Sheet_____of_____

1 Worksheet C Sheet Number	2 $\sum f$ Column B Total	3 $\sum fM_p$ Column D Total	1 Worksheet C Sheet Number	2 $\sum f$ Column B Total	3 $\sum fM_p$ Column D Total
Subtotals			Subtotals		

Frequency of preventive maintenance tasks, f = Total of column 2 sub-totals_____
Total preventive maintenance time per million hrs, fM_p = Total of column 3 sub-totals_____

Figure 2-6 Worksheet D

Source: https://assist.dla.mil -- Downloaded: 2017-02-16T09:13Z
Check the source to verify that this is the current version before use.

Source: https://assist.dla.mil -- Downloaded: 2017-02-16T09:13Z
Check the source to verify that this is the current version before use.

PROCEDURE III

1.0 GENERAL

This maintainability procedure describes a method of performing a maintainability prediction of ground electronic systems and equipment by utilizing the basic principles of random sampling.

It outlines the methods used for selecting random samples of replaceable items from the total complement of components comprising the system; subdividing this sample into smaller sub-samples by discrete classes of items and conducting a maintainability analysis for every replaceable item in the sub-sample. Typical classes of replaceable items are listed as transistor, receiving tubes, transmitting tubes, etc.

The methods of scoring each maintenance task in the "repair by replacement" cycle are also detailed. These include the use of design check lists containing a description of applicable scores and scoring criteria and the substitution of these scores into a regression equation, the solution of which, results in an estimate of downtime.

1.1 Philosophy, Assumptions and Summary

The underlying philosophy of this procedure is that system failures are principally due to the malfunction of replaceable items and therefore, the time cycle for the various steps required to replace these items is a measure of downtime which is a parameter of system maintainability. The duration of this downtime is assumed to be a function of specific design parameters which relate to: the physical configuration of the system; the facilities provided for maintenance by the design; and the degree of maintenance skills required of personnel charged with the repair responsibility.

Accordingly, it is assumed that a similar type of maintenance activity is required to repair a part of the same class when "repair by replacement" is used because the same steps are followed. These include the time required for preparation, fault location, fault correction, adjustment and calibration and final test. On this basis, it is inferred that the analysis of the times required to perform each listed step comprise maintenance tasks which can be evaluated in terms of elapsed time. The various classes of replaceable items are subdivided into categories such as transistors, receiving tubes, transmitting tubes, resistors, capacitors, etc.

Source: https://assist.dla.mil -- Downloaded: 2017-02-16T09:13Z
Check the source to verify that this is the current version before use.

The procedure also assumes that because of a basic uniformity of design, a random selection of replaceable items by class will provide a representative sample of maintenance tasks whose time of performance can be established by simulation in a manner representative of system characteristics in actual operation. The method of selection of this sample is described in detail in Sections 2.0 and 3.0.

The assignment of the times of performance for each of the steps involved in the maintenance cycle, commonly referred to as maintenance tasks, is determined by using three types of check lists. These are intended to provide a uniform method of scoring the various maintenance tasks and are labelled Check Lists A, B and C respectively. Check List A is used for scoring physical design factors, Check List B scores design dictates-facilities and Check List C is used to score design dictates-maintenance skills. The theory is employed that by using these check lists which include uniform scoring and scoring criteria, variations due to individual appraisers are minimized and the resulting scores can then be correlated with actual downtime. A regression equation (Equation 3-7) is provided for this purpose which provides a corresponding estimate of downtime when the numerical, A, B and C scores are substituted therein.

1.2 Applicability

This maintainability prediction procedure is used to predict the mean and maximum corrective maintenance downtime for ground electronic systems and equipment.

1.3 Point of Application

The procedure is adaptable for performing maintainability predictions during the Design and Development Stage. Usually prior to completion of design, a gross estimate is performed as a first step. This is later followed by more detailed estimates as development progresses.

1.4 Basic Parameters of Measure

The basic parameters of measure are:

$\bar{M}_{ct}$ = mean corrective maintenance time

$\bar{M}_{pt}$ = mean preventive maintenance time

$\bar{M}_{t}$ = mean downtime

Source: https://assist.dla.mil -- Downloaded: 2017-02-16T09:13Z
Check the source to verify that this is the current version before use.

M_{max} = maximum corrective maintenance time (95% Confidence Level)

The mathematical equations for each of the parameters of measure are shown in 2.6.

In this application preventive and corrective maintenance are defined as follows:

1.4.1 Preventive Maintenance

The maintenance performed in an attempt to retain an item in a specified condition.

1.4.2 Corrective Maintenance

The maintenance performed, as a result of a failure, to restore an item to a specified condition.

1.5 Information Required

In order to accomplish the task predictions the evaluator must have detailed information and have accessibility to, and be familiar with at least the following:

(a) Schematic diagrams

(b) Physical layouts

(c) Familiar with the functional operation of the equipment

(d) Description of tools and test equipment

(e) Maintenance aids to be incorporated in the prime equipment

(f) A description of the operational and maintenance environment

1.6 Data Basis

The data utilized for the development of this prediction procedure were obtained during the surveillance of three equipments of varying complexity, use, maintenance and packaging concepts, and the nature of the circuitry. The three equipments were:

(a) AN/FPS-2: Long range search radar, two channels. Average complexity is 10,976 parts. Maintenance is performed at the "part level".

Source: https://assist.dla.mil -- Downloaded: 2017-02-16T09:13Z
Check the source to verify that this is the current version before use.

(b) AN/FST-2: Two-channel data processor which converts analog radar returns to digital form. Average complexity is 114,500 parts. Maintenance is performed at the "module level".

(c) AN/GKA-5: Time-division data link transmitting equipment. Contains both digital and radio frequency sections. Its average complexity is 44,520 parts. The digital section uses boards and maintenance is provided by "modular replacement", that is replacing the defective boards at the "board level". The radio frequency section is comprised of individual parts and maintenance is performed by replacing defective parts.

1.7 Correlation Between Predicted and Observed Values

The correlation between predicted and observed values can be good provided that adequate information is available and mature experienced analysts are used.

The following is a tabulation of some typical results.

PREDICTED VERSUS ACTUAL TIMES

Equipment	Type of Data	Active Downtime (Mins.)
AN/FPS-6 (Radar)	Final Design Prediction	67.26
	Actual	94.03
AN/GRT-3/GRR-7	Final Design Prediction	51.90
	Actual	63.31

Although it appears that in the case of the Radar AN/FPS-6, the actual measure of maintainability does not correlate with the preliminary and final design prediction, it has been verified, that this has been due to a nonrepresentative sample of maintenance tasks. This was demonstrated by selecting maintenance tasks for simulation from actual failures in the field, the analysis of which, resulted in good correlation. The recorded data also show a high degree of correlation between the actual and predicted values of maintainability for the AN/GRT-3/GRR-7.

Source: https://assist.dla.mil -- Downloaded: 2017-02-16T09:13Z
Check the source to verify that this is the current version before use.

2.0 ANALYTIC FOUNDATION

The fundamental approach to obtaining a maintainability prediction of a complex system or equipment is to randomly select, for maintenance analysis and evaluation, a representative sample of replaceable items from the total population of parts and components which comprise the system. This total sample is termed sample size, N, because it includes parts and components of all classes of items in use. The N sample is then subdivided into a number of sub-samples of size n, termed Task Samples. Each of these task samples represents a specific class of parts such as; resistor, capacitor, motor, etc. The size of each n sample (Task Sample) is determined by considering the relative frequency of failure for a particular class of replaceable items. This means that classes of items having a higher failure rate would be represented by a larger sub-sample than those of classes having a lower failure rate.

The details of the technique for determining the sample sizes, accuracy and confidence levels are explained in 2.1 and Section 3.0. The use of sampling in predicting downtime is justified in this procedure, on the basis of uniformity of design with respect to like categories of replaceable items. This implies that on the average, it should take the same time to correct any resistor, or capacitor failure as is required for any other resistor or capacitor since the methods of mounting, fault location, adjustment, calibration, and final test are similar for replaceable parts of the same class. Therefore, these maintenance actions are referred to as samples of maintenance tasks in order to provide a status of universal applicability and the item to which these maintenance actions are applied is called the maintenance "Task Sample". On this basis if sufficient maintenance task samples are randomly selected from each class of replaceable items, these should suffice to provide a prediction of downtime for that specific category.

The downtime is calculated by performing a maintainability analysis of the maintenance tasks which entails a step by step accounting of a logical diagnostic procedure. This results in numerical scores which are assigned by following certain scoring criteria of applicable check lists. These numerical scores are then translated into a quantitative measure of downtime in hours by substituting the scores in Equation 3-7 which is a regression equation developed from past studies and experience with comparable systems.

2.1 Determination of Sample Size N

The sample size is determined by substituting in the following equation:

Source: https://assist.dla.mil -- Downloaded: 2017-02-16T09:13Z
Check the source to verify that this is the current version before use.

$$N = \left[\frac{\phi \sigma}{k \bar{X}} \right] \qquad (3\text{-}1)$$

ϕ = confidence level

σ = population standard deviation

$\bar{X}$ = population mean

k = the desired accuracy of the prediction given as a percent of the mean

2.2 Derivation of Equation for Sample Size N

Equation (3-1) can be established from an analysis of the Normal Curve, P, assuming normality of the population and the Normal Curve, S, of the distribution of means of a sample of size N taken from the population. Figure 3-1 shows this relationship.

The first stipulation made in the derivation is that it is desired to know the mean of the population (Curve P) within prescribed limits, i.e., $\bar{X} \pm k \bar{X}$ where k is the accuracy desired. For example, suppose it were estimated that the population mean is 100, and it is desired to state this value with 10% accuracy, the required interval will be 90 to 110.

When samples of a specific size are taken from a particular population, it has been found that the mean calculated for each sample will vary. These variations depend upon the variance of the parent population and the size of the sample taken. Moreover, the sample means distribute themselves normally (Curve S), having the same mean as the parent population (Curve P).

The standard deviation ($\sigma_{\bar{X}}$) of the mean distribution curve (Curve S) is related to the parent population by the following expression:

$$\sigma_{\bar{X}} = \frac{\sigma}{\sqrt{N}} \qquad (3\text{-}2)$$

where:

$\sigma_{\bar{X}}$ = standard deviation of samples of size N

Source: https://assist.dla.mil -- Downloaded: 2017-02-16T09:13Z
Check the source to verify that this is the current version before use.

σ = standard deviation of population

N = sample size

Thus, it is seen that the standard deviation of the sample means ($\sigma_{\bar{X}}$) is directly proportional to the standard deviation of the population (σ) and inversely proportional to the square root of the sample size N. Therefore, within practical limits, it is possible to have $\sigma_{\bar{X}}$ take on any value by varying the sample size.

From Figure 3-1, the following relationship should be obvious:

$$k\bar{X} = \phi\sigma_{\bar{X}} \tag{3-3}$$

where:

ϕ = confidence to be applied to the measurement (ϕ = 1.645 for 95% confidence)

k = accuracy

Substituting value of $\sigma_{\bar{X}}$ from Equation (3-2) we get;

$$k\bar{X} = \phi \frac{\sigma}{\sqrt{N}} \tag{3-4}$$

With stated accuracy requirements (k) and desired confidence (ϕ), it is necessary to find the value of N which satisfies the expressed equality.

Solving for N:

$$N = \left[\frac{\phi\sigma}{k\bar{X}}\right]^2 \tag{3-5}$$

If we label $C_X = \frac{\sigma}{\bar{X}}$, the coefficient of variation, the equation may be written as:

$$N = \left[C_X \frac{\phi}{k}\right]^2 \tag{3-6}$$

Source: https://assist.dla.mil -- Downloaded: 2017-02-16T09:13Z
Check the source to verify that this is the current version before use.

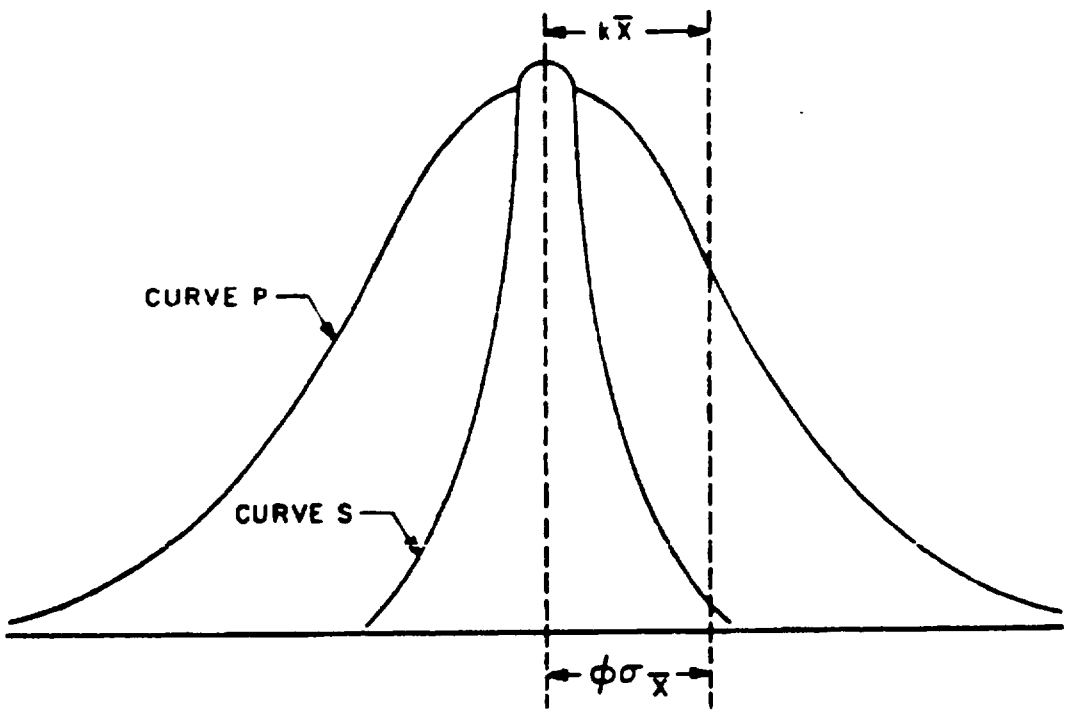

Figure 3-1. Comparison of Population and Sampling Mean Distributions

Source: https://assist.dla.mil -- Downloaded: 2017-02-16T09:13Z
Check the source to verify that this is the current version before use.

This equation has been solved for several values of k accuracy for 95% confidence. The results are shown in Figure 3-2, "Sample Size Nomograph".

The use of the nomograph will be illustrated by the following example:

Example 3-1

Suppose the expected population mean and standard deviation are estimated

to be 100 and 50 respectively. $C_x = \frac{\sigma}{\bar{x}} = \frac{50}{100} = 0.5$

It is estimated that an accuracy of 10% is desired. From the chart, the sample size, N, is approximately 67.

It must be recognized that the value of C_x must be approximated in order to be able to establish the magnitude of the sample size N. Field experience with ground electronic equipment has shown that when applied to this procedure a good practical estimate for C_x is 1.07.

2.3 Task Sample

It is important to emphasize at this point that there is a clear distinction between Task Sample and Sample Size, N, discussed in 2.1. Sample, N, contains a mixture of the total number of replaceable items that will be scored, which are randomly selected from the total quantity of parts in an equipment or system. The Task Sample, however, is a Sub-Sample, or a percentage of N containing within it a quantity of parts which are representative of a specific category, or, class of parts.

2.3.1 Task Sampling

In the interest of clarity it should be stated that Task Sampling involves the sampling of replaceable parts for evaluation of hypothetical part failures. The results of the evaluation will, on the average, be representative of the number of maintenance tasks which can be expected to occur, due to part failure, under operational conditions.

Task Sampling becomes a necessity when the complexity of equipments now appearing in the field is considered. For example, the AN/FPS-20 radar has over 10,000 active electronic parts and hence evaluation of each part with respect

Source: https://assist.dla.mil -- Downloaded: 2017-02-16T09:13Z
Check the source to verify that this is the current version before use.

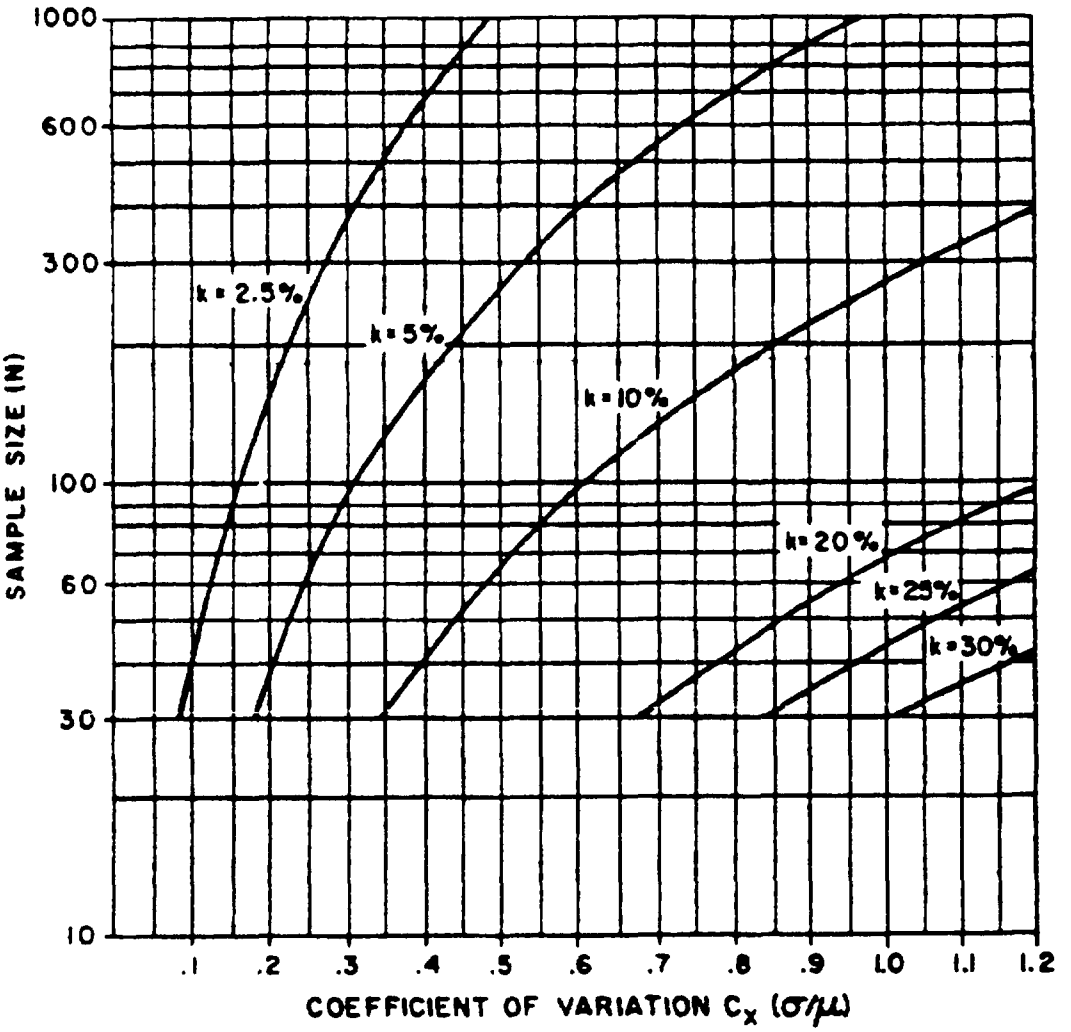

Figure 3-2. Sample Size Nomograph

Source: https://assist.dla.mil -- Downloaded: 2017-02-16T09:13Z
Check the source to verify that this is the current version before use.

to its contribution to maintenance time would be both impractical and unnecessary This is particularly true, when it is realized that the physical arrangement and function of many of these parts are similar with respect to a maintenance task. Therefore, the evaluation of randomly selected parts, within each Task Sample will result in accurate predictions of maintainability.

2.3.2 Task Sample Selection Technique

(a) General Considerations: Through the consideration of various factors associated with the failure and replacement of parts, the maintenance capability of the equipment can be predicted. The maintenance time thus derived is an estimate of the average time to accomplish a maintenance task under actual operating conditions.

(b) Process: The process of task selection is illustrated by Example 3-3 which is shown in 3.2. Reference to Table 3-1 shows that the parts are listed by part class, quantity and average part failure rate per 10^6 hours. The expected number of failures per 10^6 hours per class is computed as the product of the quantity of parts and the average class failure rate. The ratio of the expected number of failures per 10^6 hours for a class to the total of the expected number of failures for all classes is the percent contribution to failure of that class. The product of the percent contribution of each class and the sample size N is the class sub-sample, n, which gives the number of replaceable items to be analyzed for that class. The last column of Table 3-1 shows the sub-sample sizes, n, rounded off to the nearest whole number.

2.4 Application of Check Lists

Check lists are used to evaluate each maintenance step which is simulated for each of the applicable number of maintenance tasks randomly selected per class in the quantity as specified by the computational method described in 2.3 and 2.3.1. Each of the check lists are scored from 0-4 and the resulting scores are applied to a regression equation (Equation 3-7) which is used to calculate downtime. There are three general categories of design check lists which are used for assessing design, support and personnel variables.

a) Design Check Lists Assessing the D Variable: The basic types of check lists which are used to assess design (D) variables are labelled as A, B, and C. The principal variables which are included in these check lists are outlined in the following paragraphs. For greater detail it is suggested that reference be made to each individual check list (see Addendum A).

Source: https://assist.dla.mil -- Downloaded: 2017-02-16T09:13Z
Check the source to verify that this is the current version before use.

(1) The A Check List is used to score specific maintenance tasks that are a function of physical design variables such as packaging, access characteristics, test points, displays, etc.

(2) The B Check List is used to score Design Dictates-Facilities. These include such variables as: external test equipment, connectors, assistance (operations personnel), etc.

(3) The C Check List evaluates the personnel requirements relating to physical, mental and attitude characteristics. Typical of the criteria are: visual acuity, logical analysis, memory, endurance and energy, etc.

2.5 Linear Regression Equation for Downtime

The linear regression equation which is used to calculate the predicted downtime is:

$$M_{ct} = \text{antilog}\,(3.54651 - 0.02512A - 0.03055B - 0.01093C) \qquad (3\text{-}7)$$

The coefficients of this equation were derived from 101 corrective maintenance tasks appearing on appropriate check lists for the AN/FPS-20 long range search radar, AN/FST-2 two channel data processor and AN/GKS-5 data link transmitting equipment. The symbol M_{ct} means corrective maintenance time and the letters A, B and C, respectively, represent the scores obtained by the use of the respective applicable check lists.

2.6 Mathematical Relationships of Maintenance Times

The applicable mathematical expressions for calculating the various maintainability indices are shown below:

$$\overline{M}_{ct} = \frac{\sum_{i=1}^{N} M_{ct}}{N} \qquad (3\text{-}8)$$

where: $\overline{M}_{ct}$ = mean corrective maintenance time

N = sample size of corrective maintenance tasks

M_{ct} = corrective maintenance time of individual maintenance tasks

Source: https://assist.dla.mil -- Downloaded: 2017-02-16T09:13Z
Check the source to verify that this is the current version before use.

similarly:

$$\overline{M}_{pt} = \frac{\sum_{i=1}^{N} M_{pt}}{N} \tag{3-9}$$

where:

$\overline{M}_{pt}$ = mean preventive maintenance time

M_{pt} = preventive maintenance time of individual maintenance tasks

M_{max} is expressed as:

$$M_{max} = \text{antilog}\left[\overline{\log M_{ct}} + 1.645\sigma \log M_{ct}\right] \tag{3-10}$$

where:

$$\overline{\log M_{ct}} = \frac{\sum_{i=1}^{N_c} \log M_{cti}}{N_c} = \text{mean of } \log M_{ct}$$

and $$\sigma \log M_{ct} = \sqrt{\frac{\sum_{i=1}^{N_c} (\log M_{cti})^2 - (\sum_{i=1}^{N_c} \log M_{cti})^2/N_c}{N_c - 1}}$$

$$\overline{M}_t = \frac{F_c \overline{M}_{ct} + F_p \overline{M}_{pt}}{F_c - F_p} \tag{3-11}$$

where:

$\overline{M}_t$ = mean downtime

F_p, F_c = number of preventive and corrective maintenance tasks per thousand hours

Source: https://assist.dla.mil -- Downloaded: 2017-02-16T09:13Z
Check the source to verify that this is the current version before use.

3.0 APPLICATION

3.1 General Approach

The maintainability prediction technique for evaluation of electronic equipment is accomplished in four steps as follows:

(a) Determination of sample size, N

(b) Determination of task sub-samples, n

(c) Prediction

(d) Calculation of maintenance indices

Briefly the statistical selection of a sample of failed parts/components and the quantitative evaluation of the contribution that each assumed failure makes to the total equipment maintenance time, permits the calculation of the overall equipment mean downtime. The justification for, and the steps involved in, determining the total downtime, are given in detail in the text that follows.

The use of this method permits the calculation of an accurate system maintainability figure, without requiring the time consuming empirical evaluation of the maintainability of each part/component in a complex electronic system. Detailed explanations for each of those steps, plus illustrative examples of the process, are contained in the following paragraphs.

3.1.1 Determination of Sample Size

The sample size to be used in the prediction is dependent upon the statistical accuracy desired. With stated accuracy requirements (k) and desired confidence level, (ϕ), the sample size (N) which satisfies these requirements is computed as shown in Equation (3-1) which is repeated here for convenience:

$$N = \left[\frac{\phi\sigma}{kX}\right]^2$$

3.1.2 Step-by-Step Procedure for Calculating Sample Size

(a) Decide on the accuracy (k) or precision of prediction desired; that is, decide how large a confidence interval is adequate for prediction purposes and express that interval as a percent of the expected MTTR (the latter is to be expressed in minutes).

Source: https://assist.dla.mil -- Downloaded: 2017-02-16T09:13Z
Check the source to verify that this is the current version before use.

(b) Decide on the level of confidence (ϕ) to be associated with the interval determined in (a) above.

(c) Obtain an estimate of the population value of the coefficient of variation (C_X). The expression for this statistic is:

$$C_X = \frac{\sigma}{\overline{X}} \tag{3-12}$$

where:

σ = the population standard deviation of MTTR

$\overline{X}$ = the population arithmetic mean

(Note: The estimate of C_X may be based on experience with similar systems on which adequate measures are available. If satisfactory data are not available, use C_X = 1.07).

(d) Substitute these values in the following equation and solve for Sample Size, N: (This is a variation of Equation (3-1) in which C_X is substituted for $\frac{\sigma}{\overline{X}}$

$$N = \left[C_X \left(\frac{\phi}{k}\right)\right]^2 \tag{3-13}$$

where:

C_X = the coefficient of variation

ϕ = the normal deviate corresponding to the desired confidence level; and

k = the desired accuracy of the prediction, given as a percent of the mean.

Source: https://assist.dla.mil -- Downloaded: 2017-02-16T09:13Z
Check the source to verify that this is the current version before use.

Example (3-2)

Assume that it is desired to state the MTTR with an accuracy of ±25 percent with a confidence of 95 percent. What sample size is required? Substituting in Equation (3-13) we obtain

$$N = \left[C_x \left(\frac{\phi}{k}\right)\right]^2 = \left[1.07 \left(\frac{1.645}{.25}\right)\right]^2 = 50$$

Figure 3-2 is a nomograph which relates the sample size to C_x for a number of common accuracy values. To solve under the same assumptions as in the preceding example find the value of C_x (= 1.07) on the abscissa, follow up to the curve labelled "25%", and across to the ordinate to read N (= 50).

3.2 Step-by-Step Procedure for Calculating Task Sample

(a) Determine the failure rate contribution of each part type in the system or equipment to the overall failure rate. That is, determine what percent of the failures will be attributable to tubes, to resistors, to transistors, to capacitors, etc.

(b) Using the percentages computed above, calculate how many of the N items (determined from (a) above) will be apportioned to tubes, to transistors, to resistors, etc., i.e., calculate the class sub-sample size, n.

(c) Select randomly from each part type enough items to meet the requirements set up in (b).

Example (3-3)

Assume an equipment with parts as shown in the first column of Table 3-1 and that the number of each type of part is as shown in Column 2. Given the part failure rates as in Column 3, the number of failures expected per 10^6 hours appear in Column 4. Expressing the entries in Column 4 as percents of the sum of Column 4 then yields Column 5. This is the percent contribution to the total expected failures of each part listed in Column 1. Multiplying these percents by the sample size of 50 yields Column 6 which shows the number of simulated maintenance tasks per part class or category. The values in Column 6 are then rounded off to yield the values in Column 7.

Source: https://assist.dla.mil -- Downloaded: 2017-02-16T09:13Z
Check the source to verify that this is the current version before use.

TABLE 3-1

PART CLASS FAILURE DISTRIBUTION AND SAMPLE SIZE

(1) Part Class	(2) Quantity	(3) Average Part Failure Rate 10^6 Hours	(4) Expected Number of Failures per 10^6 Hours	(5) Contribution to Total Expected Failures (%)	(6) No. of Failures for Sample Size, N = 50	(7) Actual Class Sample used$_n$
Motor	25	1.89	47.25	.65	.3	0
Capacitor	1280	0.100	128.00	1.76	.9	1
Diode	4	29.83	119.32	1.64	.8	1
Connector	335	0.320	107.20	1.47	0.7	1
Relay	43	3.59	154.37	2.12	1.1	1
Coil	349	0.330	115.17	1.58	.8	1
Resistor	2459	0.150	368.85	5.07	2.5	2
Switch	162	0.450	72.90	1.00	.5	1
Transformer	160	1.33	212.80	2.92	1.5	1
Tube	380	15.67	5954.60	81.79	40.9	41
Total	5197		7280.46	100%		50

Source: https://assist.dla.mil -- Downloaded: 2017-02-16T09:13Z
Check the source to verify that this is the current version before use.

3.3 Step-by-Step Procedure for Performing Task Prediction

To accomplish the task predictions, the evaluator should have available detailed information including schematic diagrams and physical layouts. He must also be thoroughly familiar with the functional operation of the equipment. Other information needed is a description of the tools and test equipment to be provided and the maintenance aids to be incorporated in the prime equipment. A description of the operation and maintenance environment is also extremely valuable. Figure 3-3, "Maintainability Prediction Form", has been developed to facilitate the maintenance analysis and task scoring. On this form specific information required to complete the task or part failure prediction is listed along with identification data regarding equipment, evaluator, etc.

(a) Maintenance Analysis: Prior to task scoring, it is necessary that, for each task a maintenance analysis be performed. This analysis entails a step-by-step accounting of the most likely diagnostic procedure. Beginning with the symptoms of malfunction, each step required in locating the defective part is recorded. Complementary to each step, notations regarding access problems, test equipment requirements, and related information which is important to determining the task scores, are made. Figure 3-3 the Maintenance Analysis form and Figure 3-4 the continuation sheet, illustrate a format used for this analysis. The form is divided into two columns. The left column labelled "Maintenance Steps", is used to record each test or step that a technician should make. Scoring comments associated with each step are entered in the column on the right. Completion of the maintenance analysis provides a firm basis for the scoring. The full scope of a maintenance situation is realized through this process.

(b) System Maintenance Diagram: This analysis may be facilitated by the preparation of a "System Maintenance Diagram", which would clearly detail the system functional block diagram, with main signal paths, major test points and other diagnostic aids shown. An illustration of such a diagram is shown in Figure 3-5, "Maintenance Diagram AN/GRT-3". This diagram assists in the determination of the malfunction symptoms and in selecting steps to isolate the malfunction to a functional area. It is necessary to have a schematic diagram for each block to troubleshoot within a block and to determine the effect of an assumed failure on the output (s) of other blocks. The illustrated diagram is representative of the minimum requirements for such a diagram and may be expanded to varying degrees depending on the complexity of the equipment and the information available.

Source: https://assist.dla.mil -- Downloaded: 2017-02-16T09:13Z
Check the source to verify that this is the current version before use.

Equip. _____ Unit/Part _____ Task No. _____

Ass'y _____ By _____ Date _____

Primary function failed unit/part _____

_____

Mode of failure _____

Malfunction symptoms _____

_____

Maintenance Analysis

Maintenance Steps	Scoring Comments

Checklist Scores

	1	2	3	4	5	6	7	8	9	10	11	12	13	14	15	Total
A																
B																
C																

Predicted downtime ____ Min.

Figure 3-3 Maintainability Prediction Form

Source: https://assist.dla.mil -- Downloaded: 2017-02-16T09:13Z
Check the source to verify that this is the current version before use.

MAINTENANCE ANALYSIS CONTINUATION SHEET

Equip. _____ Part _____ Task No. _____

Maintenance Steps	Scoring Comments

Figure 3-4 Maintenance Analysis Continuation Sheet

Source: https://assist.dla.mil -- Downloaded: 2017-02-16T09:13Z
Check the source to verify that this is the current version before use.

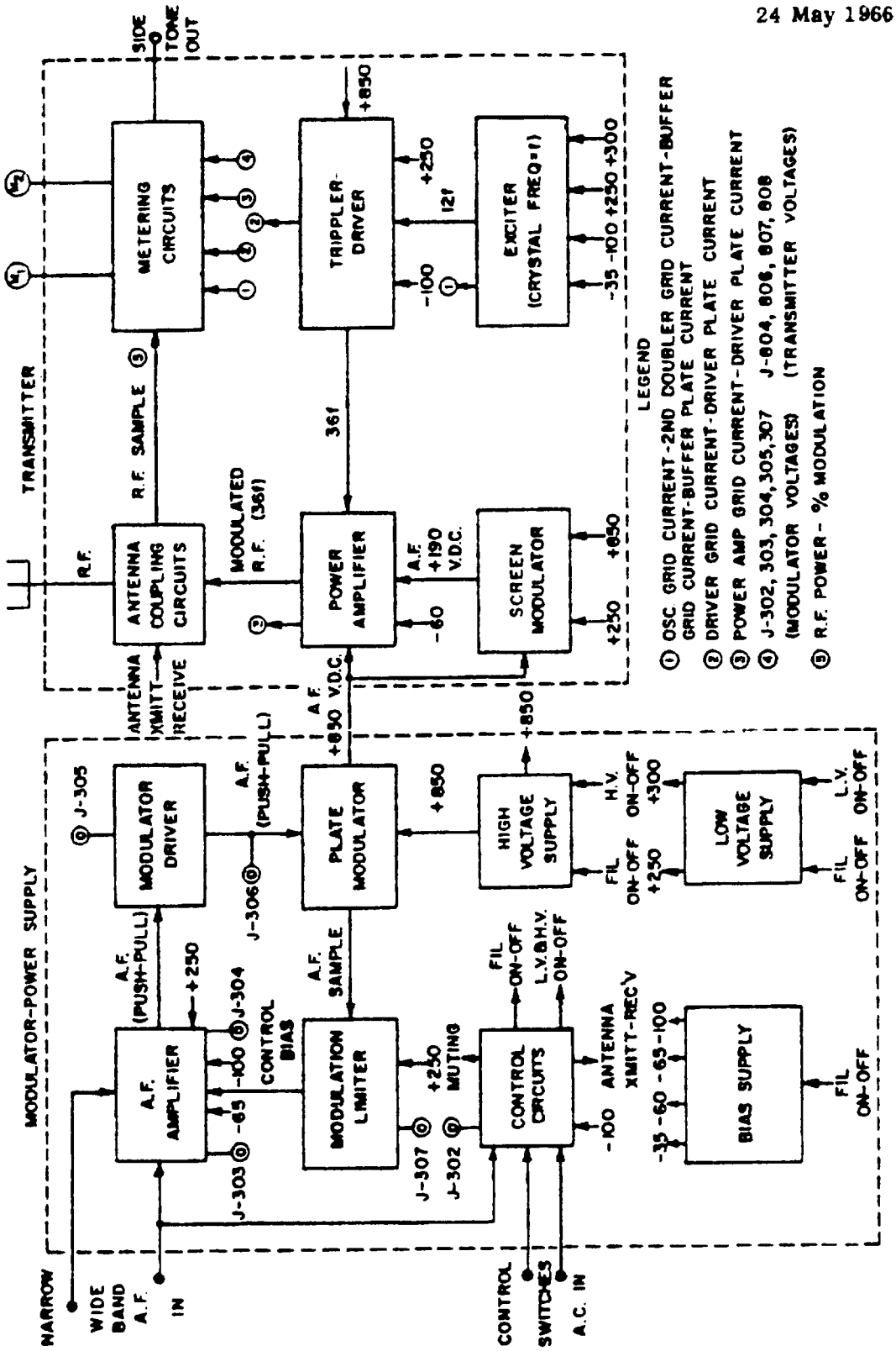

Figure 3-5. Maintenance Diagram AN/GRT-3

Source: https://assist.dla.mil -- Downloaded: 2017-02-16T09:13Z
Check the source to verify that this is the current version before use.

Example (3-4)

The use of the maintenance analysis procedures described in paragraph (a) will be illustrated by evaluating the time requirements for a specific maintenance task. Resistor R-7801, appearing in Amplifier Mixer AM-1345/FPS-20 of the Radar AN/FPS-20, has been selected for this purpose. The following discussion illustrates the procedure to be followed (see Table 3-2).

Evaluation of Resistor Failure

The resistor failure was assumed to have occurred by opening. Following this assumption, a step-by-step maintenance analysis was made, drawing from both general maintenance experience and technical data. This procedure is illustrated in Table 3-2 "Maintenance Analysis, R-7801/FPS-20". Here the detailed steps necessary to isolate the defective resistor are listed. For each step, comments regarding availability of test indicators, need for test equipment, access problems, and related information needed to effectively score this task were listed. Figure 3-6, "AN/FPS-20, Transmitting System", illustrates functionally the major circuits associated with the transmitter section. Within the diagram each step has been numerically identified. It will be noted that the troubleshooting path chosen is one of several possible routes. The route established was based on the importance of the check and the ease with which it could be taken: For example, in Step 2, the trigger input which is vital for the proper operation of three portions of the transmitter, was tested. The third step was selected because of the ease with which the information could be secured (built-in metering). Such choices are generally consistent with procedures employed by electronic technicians.

Figure 3-7 "Amplifier Mixer AM-1347/FPS-20", illustrates the mechanical layout of the section of the equipment within which the defective part was located. As indicated in the maintainability analysis, the plate power supply sub-chassis had to be removed for further testing. Figure 3-8, "Expanded View, Plate Power Supply", shows the underside of the power supply. Here, the terminal board on which resistor R-7801 is located has been identified. Functionally, the use of resistor R-7801 is illustrated in Figure 3-9, "Plate Supply Block Diagram". The resistor provides continuity between the rectifier and series dropping electron tubes. Its opening caused loss of plate supply voltage to the buffer amplifier, thus preventing operation of the transmitter.

These illustrations, in association with other technical material secured from the applicable technical order, provided the basis for the scoring comments in the Maintenance Analysis Continuation Sheet (Table 3-2).

Source: https://assist.dla.mil -- Downloaded: 2017-02-16T09:13Z
Check the source to verify that this is the current version before use.

TASK PREDICTION, R-7801

MAINTAINABILITY PREDICTION FORM

Equip. AN/FPS-20 Unit/Part R-7801 Task No. _____

Ass'y. _____ By _____ Date _____

Primary function failed unit/part Series resistor in 620 V. D. C. power supply output network.

Mode of failure Resistor opened

Malfunction symptoms No return on radar indicator

Maintenance Analysis

Maintenance Steps	Scoring Comments
See Table 3-3	

Checklist Scores

	1	2	3	4	5	6	7	8	9	10	11	12	13	14	15	Total
A	4	2	4	2	0	2	2	2	3	2	4	4	4	2	4	41
B	1	4	4	4	4	2	4									23
C	1	3	3	2	1	2	2	2	2	2						20

Predicted downtime. . . . . 40 Min.

TABLE 3-2

Source: https://assist.dla.mil -- Downloaded: 2017-02-16T09:13Z
Check the source to verify that this is the current version before use.

TABLE 3-3

MAINTENANCE ANALYSIS, R-7801/FPS-20

Maintenance Analysis Continuation Sheet

Equipment AN/FPS-20 Part R-7801/FPS-20 Task No. 1

Maintenance Steps	Scoring Comments
1. Equipment malfunction is initially indicated by no target returns on indicator. Maintenance action proceeds to isolate trouble to major equipment functions. Power output check at bidirectional coupler (CU-516) isolates trouble to transmitter function.	Radio Frequency Monitor (I D-446) normally connected to system is used to monitor power output at bidirectional coupler (CU-516). Test equipment serves variety of tests for equipment adjustment and repair. Preliminary calibration or test set-up may be required. Proper values listed in T.O.
2. Trigger pulse is checked at I PA Modulator (MD-276) to isolate trouble to transmitter or modulator unit of the transmitter section. Presence of trigger indicates trouble in R. F. generating stages (Stalo, Buffer Amplifier, Mixer, or Power Amplifier).	Oscilloscope is used to check trigger pulse at J-1405 on front panel of modulator MD-276 (I PA modulator). Oscilloscope set-up and adjustments required. Proper reading listed in T.O.
3. Meter reading on Amplifier-Mixer, Intermediate Power Amplifier and Power Amplifier are observed and checked against required values. No cathode current on meter M-7702 of Amplifier-Mixer AM-1347 indicates trouble is in second amplifier stage or power supply (PP-1347).	Cathode current meter M-7702 provides front panel indication of trouble in AM-1347. Proper value listed in T.O.

Source: https://assist.dla.mil -- Downloaded: 2017-02-16T09:13Z
Check the source to verify that this is the current version before use.

TABLE 3-3 (Continued)

Maintenance Analysis Continuation Sheet

Equipment AN/FPS-20 Part R-7801/FPS-20 Task No. 1

Maintenance Steps	Scoring Comments
4. Power Supply PP-1377 monitors are observed (fuse lights and meters) to isolate trouble to the amplifier or power supply. No 620 V. D. C. noted on meter (M-7801).	Front panel mounted meter M-7801 and fuse lights provide rapid check of A. C. input voltages to rectifiers and D. C. voltage to amplifier tubes. Proper meter reading listed in T. O.
5. Power Supply PP-1377 is removed from front of cabinet and the 620 V. D. C. circuit checked. Tube check made prior to chassis removal from cabinet. Trouble is isolated to open resistor.	External access requires removal of power supply from cabinet. Chassis must be removed partially to allow disconnecting of cables located in rear. Power Supply contains heavy transformers and filters requiring strength and endurance. Two men required to remove and place on workbench. Multimeter and tube checker required to isolate trouble resistor in 620 V. D. C. section. Spring lock fasteners permit rapid removal of chassis. Resistor board mounted on the underside of chassis by screws. Resistor is soldered to terminals. Some delay to be expected in repair action due to part location and necessity to use care in part removal to avoid heat damage or solder contamination to adjacent parts.

Source: https://assist.dla.mil -- Downloaded: 2017-02-16T09:13Z
Check the source to verify that this is the current version before use.

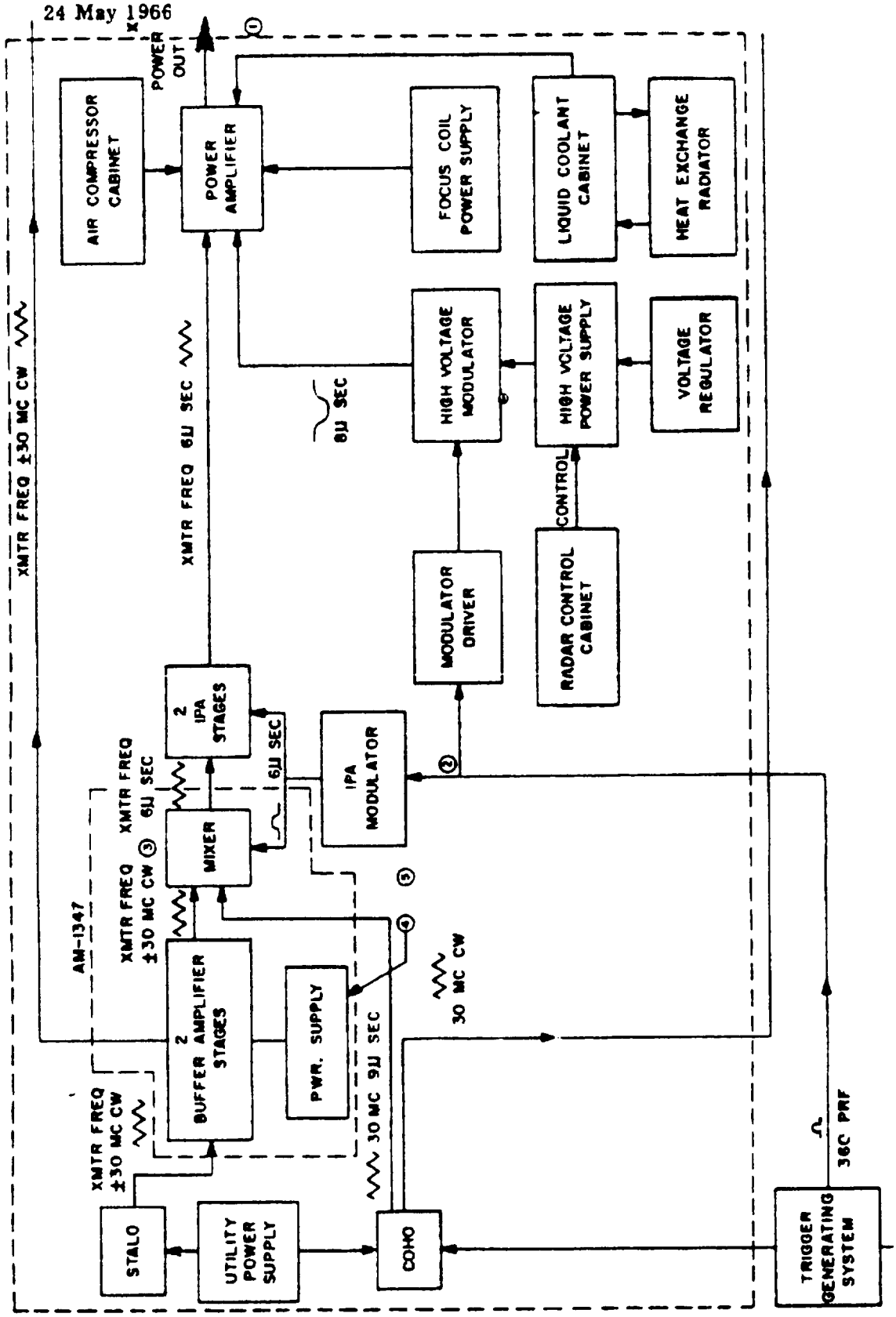

Figure 3-6. AN/FPS-20, Transmitting System

Source: https://assist.dla.mil -- Downloaded: 2017-02-16T09:13Z
Check the source to verify that this is the current version before use.

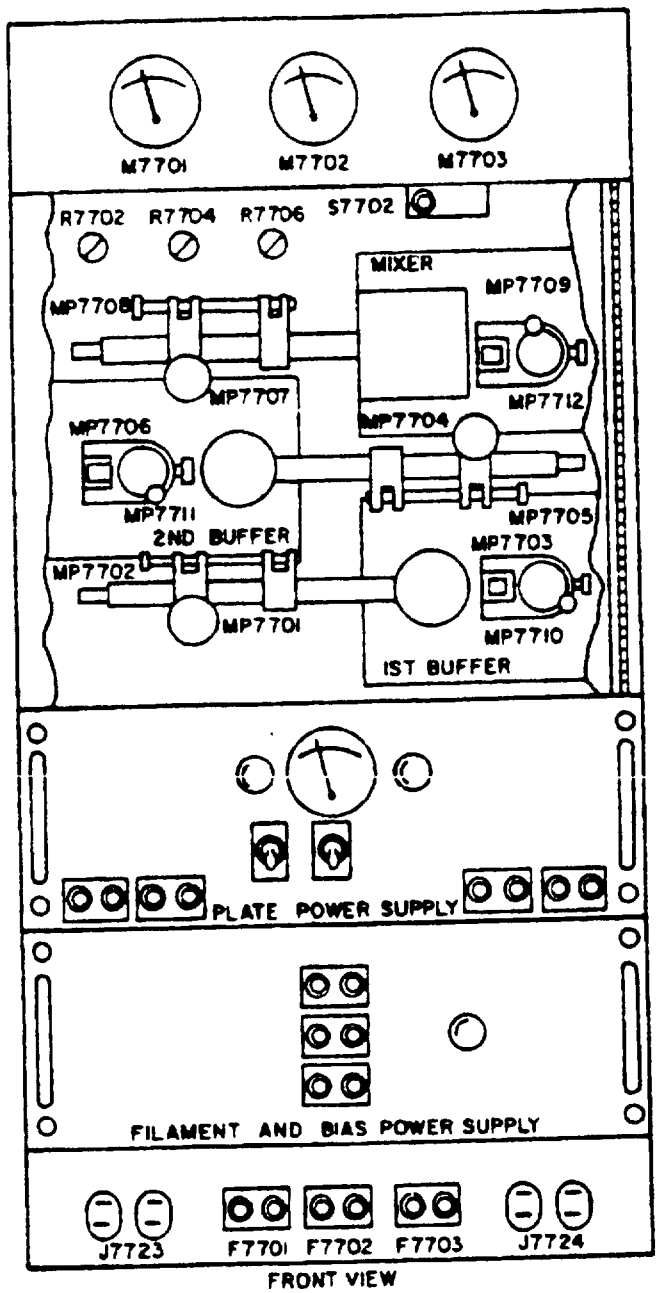

Figure 3-7. Amplifier-Mixer, AM-1347/FPS-20

Source: https://assist.dla.mil -- Downloaded: 2017-02-16T09:13Z
Check the source to verify that this is the current version before use.

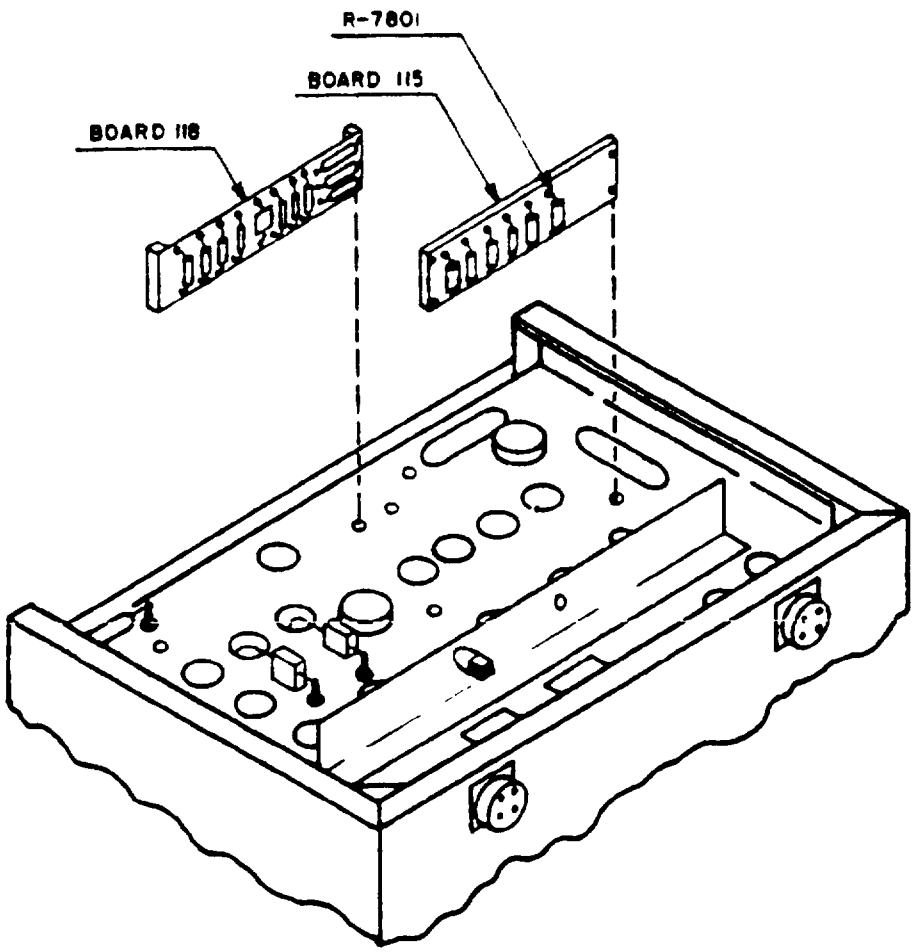

Figure 3-8. Expanded View, Plate Power Supply

Source: https://assist.dla.mil -- Downloaded: 2017-02-16T09:13Z
Check the source to verify that this is the current version before use.

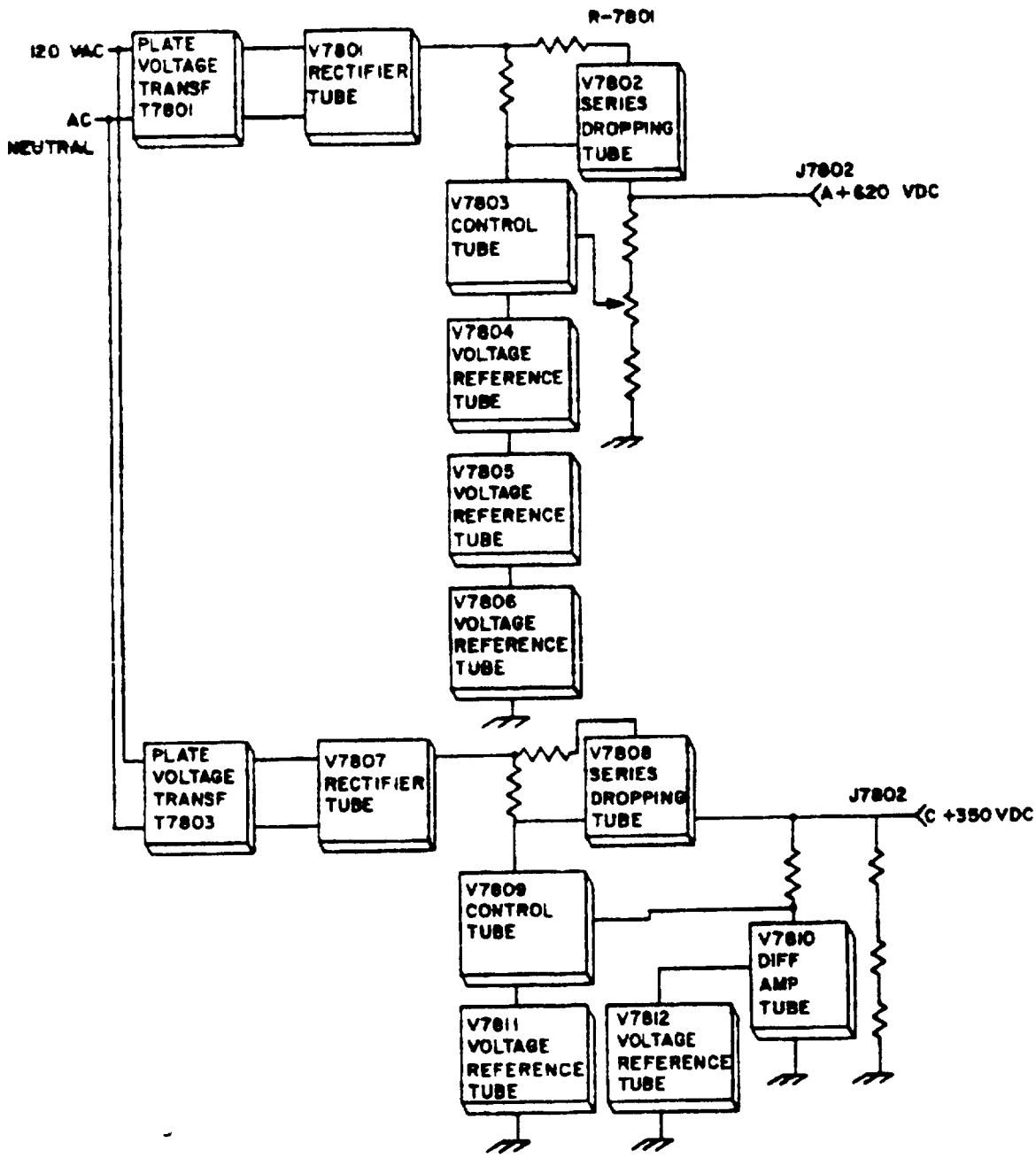

Figure 3-9. Plate Supply, Block Diagram

Source: https://assist.dla.mil -- Downloaded: 2017-02-16T09:13Z
Check the source to verify that this is the current version before use.

3.4 Calculation of Maintenance Indices

(a) Task Scoring: The design prediction is accomplished by completing the three design-related check lists for sample tasks. Specifically, these check lists are: A, Scoring Physical Design Factors; B, Scoring Design Dictates-Facilities; and C, Scoring Design Dictates-Maintenance Skills. These check lists are presented in Addendum A together with all instructions necessary for scoring each item.

The scoring for each item ranges from 0 to 4. Intermediate values of 1, 2 and 3 are provided for some questions where the nature of the characteristic being assessed may take on varying magnitudes. This is contrasted to the yes-no situation. The questions have been framed in a manner that permits general application across equipment lines.

Situations may arise where insufficient information is available to score a particular check list question; or, a question is not applicable to a particular task. If insufficient data is available, the average question score for the check list should be inserted. For example, if 14 questions were scored and the total score was 42, the average question score is three. Inserting this value for the unevaluated item, the final score is 45. For other situations, i.e., not applicable, a score of four should be used. The reasoning here is that if a particular item does not apply, it is not detrimental to maintenance.

To illustrate the scoring process, the scores obtained for the sample maintenance analysis tasks are shown in Table 3-3, "Task Prediction, R-7801". The score for each check list question is obtained by referring to the scoring comments in the maintenance analysis and the technical data available for the equipment. The task was reviewed for items that pertain to each question and the questions were then scored in accordance with the criteria, presented in Addendum A. In cases where the quality of a feature is scored, the worst condition encountered is used.

To illustrate further how check list scores are obtained, some of the specific scores in Table 3-3 will be examined. In Check List A, question 2 received a score of 2 (external latches and fasteners meet two of the criteria that they are captive, need no special tools, and require only a fraction of turn for release). In Check List B, question 1 received a score of 1 (2 or 3 pieces of test equipment are needed). Examination

Source: https://assist.dla.mil -- Downloaded: 2017-02-16T09:13Z
Check the source to verify that this is the current version before use.

of Table 3-2 indicates that an oscilloscope, multimeter, and tube checker were used to accomplish this task. For Check List C, question 5 received a score of 1. This score was assigned because the initial symptoms gave very little indication as to the cause of malfunction and because a number of the major units had to be checked to isolate the trouble to a functional area.

(b) Downtime Calculation: The last step in the prediction process is to calculate the predicted downtime for each task. This is accomplished by inserting the total check list scores for each maintenance task performed in Equation (3-7). The equation is repeated here for immediate reference:

$$M_{ct} = \text{antilog}\ (3.54651 - 0.02512A - 0.03055B - 0.01093C)$$

To facilitate this calculation a nomograph was developed for the prediction equation and is shown in Figure 3-10, "Nomograph - Downtime". The use of this nomograph permits the determination of downtime directly in real time (instead of log values). All instructions for use of the nomograph to calculate maintenance indices are contained in Figure 3-10; and are the mean active corrective maintenance downtime $\overline{M}_{ct}$, and the maximum active corrective maintenance downtime M_{max}. The mean corrective maintenance time, $\overline{M}_{ct}$, is obtained by substituting in Equation (3-8). The maximum corrective maintenance time, M_{max}, is found by substituting in Equation (3-10).

Source: https://assist.dla.mil -- Downloaded: 2017-02-16T09:13Z
Check the source to verify that this is the current version before use.

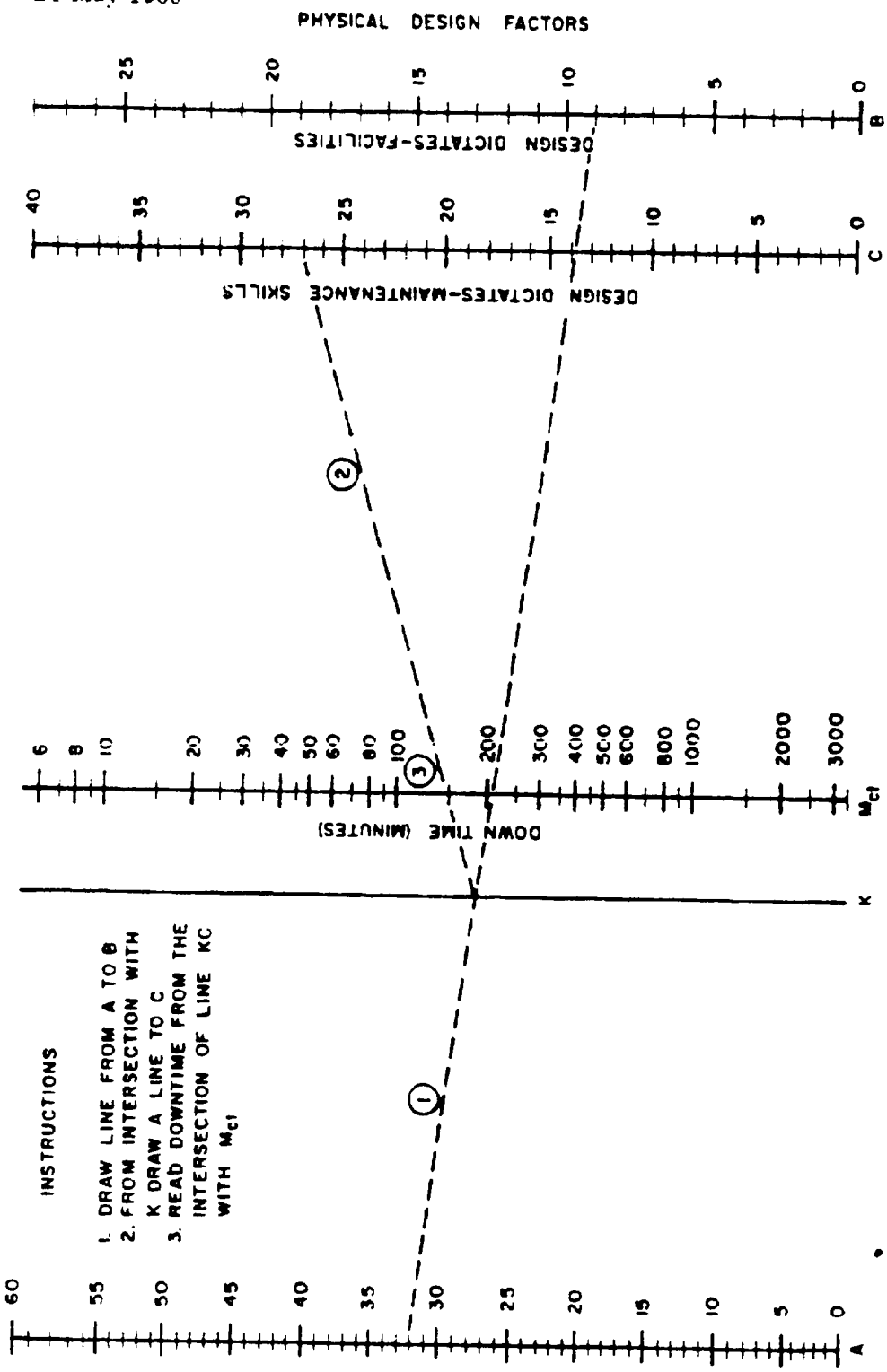

Figure 3-10. Nomograph - Downtime

Source: https://assist.dla.mil -- Downloaded: 2017-02-16T09:13Z
Check the source to verify that this is the current version before use.

ADDENDUM A

DESIGN CHECK LISTS AND SCORING CRITERIA:

The three Design Check Lists A, B, and C and their respective scoring criteria follow:

CHECK LIST A - SCORING PHYSICAL DESIGN FACTORS

(1) Access (External): Determines if the external access is adequate for visual inspection and manipulative actions. Scoring will apply to external packaging as related to maintainability design concepts for ease of maintenance. This item is concerned with the design for external visual and manipulative actions which would precede internal maintenance actions. The following scores and scoring criteria will apply:

Scores

(a) Access adequate both for visual and manipulative tasks (electrical and mechanical) 4

(b) Access adequate for visual, but no manipulative, tasks 2

(c) Access adequate for manipulative, but not visual, tasks 2

(d) Access not adequate for visual or manipulative tasks 0

Scoring Criteria

An explanation of the factors pertaining to the above scores is consecutively shown. This procedure is followed throughout for other scores and scoring criteria.

(a) To be scored when the external access, while visual and manipulative actions are being performed on the exterior of the subassembly, does not present difficulties because of obstructions (cables, panels, supports, etc.).

(b) To be scored when the external access is adequate (no delay) for visual inspection, but not for manipulative actions.

Source: https://assist.dla.mil -- Downloaded: 2017-02-16T09:13Z
Check the source to verify that this is the current version before use.

External screws, covers, panels, etc., can be located visually; however, external packaging or obstructions hinders manipulative actions (removal, tightening, replacement, etc.).

(c) To be scored when the external access is adequate (no delay) for manipulative actions, but not for visual inspections. This applies to the removal of external covers, panels, screws, cables, etc., which present no difficulties; however, their location does not easily permit visual inspection.

(d) To be scored when the external access is inadequate for both visual and manipulative tasks. External covers, panels, screws, cables, etc., cannot be easily removed nor visually inspected because of external packaging or location.

(2) Latches and Fasteners (External): Determines if the screws, clips, latches, or fasteners outside the assembly require special tools, or if significant time was consumed in the removal of such items. Scoring will relate external equipment packaging and hardware to maintainability design concepts. Time consumed with preliminary external disassembly will be proportional to the type of hardware and tools needed to release them and will be evaluated accordingly.

Scores

(a) External latches and/or fasteners are captive, need no special tools, and require only a fraction of a turn for release 4

(b) External latches and/or fasteners meet two of the above three criteria 2

(c) External latches and/or fasteners meet one or none of the above three criteria 0

Scoring Criteria

(a) To be scored when external screws, latches, and fasteners are:

(1) Captive

(2) Do not require special tools

Source: https://assist.dla.mil -- Downloaded: 2017-02-16T09:13Z
Check the source to verify that this is the current version before use.

(3) Can be released with a fraction of a turn

Releasing a "DZUS" fastener which requires a 90 degree turn using a standard screw driver is an example of all three conditions.

(b) To be scored when external screws, latches, and fasteners meet two of the three conditions stated in (a) above. An action requiring an Allen wrench and several full turns for release shall be considered as meeting only one of the above requirements.

(c) To be scored when external screws, latches, and fasteners meet only one or none of the three conditions stated in (a) above.

(3) Latches and Fasteners (Internal): Determines if the internal screws, clips, fasteners or latches within the unit require special tools, or if significant time was consumed in the removal of such items. Scoring will relate internal equipment hardware to maintainability design concepts. The types of latches and fasteners in the equipment and standardization of these throughout the equipment shall tend to affect the task by reducing or increasing required time to remove and replace them. Consider "internal" latches and fasteners to be within the interior of the assembly.

Scores

(a) Internal latches and/or fasteners are captive, need no special tools, and require only a fraction of a turn for release 4

(b) Internal latches and/or fasteners meet two of the above three criteria 2

(c) Internal latches and/or fasteners meet one or none of the above three criteria 0

Scoring Criteria

(a) To be scored when internal screws, latches and fasteners are:

(1) Captive

(2) Do not require special tools

Source: https://assist.dla.mil -- Downloaded: 2017-02-16T09:13Z
Check the source to verify that this is the current version before use.

(3) Can be released with a fraction of a turn

Releasing a "DZUS" fastener which requires a 90-degree turn using a standard screw driver would be an example of all three conditions.

(b) To be scored when internal screws, latches, and fasteners meet two of the three conditions stated in (a) above. A screw which is captive can be removed with a standard or Phillips screw driver, but requires several full turns for release.

(c) To be scored when internal screws, latches, and fasteners meet one of three conditions stated in (a) above. An action requiring an Allen wrench and several full turns for release shall be considered as meeting only one of the above requirements.

(4) Access (Internal): Determines if the internal access is adequate for visual inspection and manipulative actions. This item applies to internal packaging concepts in relation to design for ease of maintenance. Internal is to mean all work accomplished after gaining access to some portion of the equipment.

Scores

(a) Access adequate both for visual and manipulative tasks (electrical and mechanical) 4

(b) Access adequate for visual, but not manipulative, tasks 2

(c) Access adequate for manipulative, but not visual, tasks 2

(d) Access not adequate for visual or manipulative tasks 0

Scoring Criteria

(a) To be scored when the internal access, while performing manipulative or visual actions in a sub-assembly or unit, does not present difficulties because of the internal construction or part location.

Source: https://assist.dla.mil -- Downloaded: 2017-02-16T09:13Z
Check the source to verify that this is the current version before use.

(b) To be scored when the internal access is adequate (no delay) for visual inspection, but not for manipulative actions. Components and parts can readily be located visually during the maintenance task; however, internal construction or part location hampers manipulative actions (testing, removal, etc.).

(c) To be scored when the internal access is adequate for manipulative actions, but not for visual inspections. Components or parts can be easily tested or removed; however, their physical location does not easily permit visual inspection.

(d) To be scored when internal access is adequate for both visual and manipulative tasks. Components or parts cannot be easily tested or identified because of internal construction or location during the maintenance action.

(5) Packaging: Determines the access (within the subassembly) to components or parts requiring mechanical disassembly. This question concerns itself with the internal packaging of parts relative to the maintenance action. Current design concepts have been concentrated on module type packaging; however, even these vary in a mechanically held module, while others are plug-in type only. This item deals with the mechanical problems involved in gaining access to failed components or parts.

Scores

(a) Internal access to components and parts can be made with no mechanical disassembly 4

(b) Little disassembly required (less than 3 min.) . . 2

(c) Considerable disassembly is required (more than 3 min.). 0

Scoring Criteria

(a) To be scored when less than one minute is required to gain access to the failed components or part.

Source: https://assist.dla.mil -- Downloaded: 2017-02-16T09:13Z
Check the source to verify that this is the current version before use.

(b) To be scored when less than three minutes is expended in gaining access to the failed component or part.

(c) To be scored when more than three minutes is expended in gaining access to the failed component or part.

(6) Units - Parts (Failed): Determines the manner in which units or parts are removed or replaced during the maintenance action. Since units and parts are electrically and/or mechanically secured in equipments in many different ways, the time to remove such items varies considerably. Mechanically held items include tubes protected from vibrations by special shields or clamps, printed boards clipped into their sockets, and parts and components held by brackets. Soldered items include resistors, capacitors, etc.

(a) Units or parts of plug-in nature 4

(b) Units or parts of plug-in nature and mechanically held . . . 2

(c) Units of solder-in nature 2

(d) Units of solder-in nature and mechanically held 0

Scoring Criteria

(a) To be scored when units or parts are plug-in types requiring only to be pulled out. Plug-in type parts such as tubes, some relays, crystals, etc., would be included in this category.

(b) To be scored when units or parts are plug-in types, but are mechanically held by clips, shields, clamps, etc. Also applies to maintenance requiring the removal of a tube having external grid or plate connections, anti-vibration shields, etc.

(c) To be scored when units or parts are soldered-in types such as resistors, capacitors, etc., when the removal of parts requires the unsoldering of part terminations.

(d) To be scored when units or parts are soldered-in mechanically held types such as transformers, jacks, etc. The removal or replacement of parts requires mechanical disassembly and unsoldering.

Source: https://assist.dla.mil -- Downloaded: 2017-02-16T09:13Z
Check the source to verify that this is the current version before use.

(7) Visual Displays: Determines if sufficient visual information pertaining to the equipment malfunction is displayed within one area or unit. Circuit indicators and meters provide, to some extent, symptom analysis. Therefore, it is important that these indications be displayed within one area to ensure rapid analysis and action. If several areas must be consulted before a qualified estimation of the difficulty can be made, much time is required.

Scores

(a) Sufficient visual information on the equipment is given within one display area 4

(b) Two display areas must be consulted to obtain sufficient visual information 2

(c) More than two areas must be consulted to obtain sufficient visual information 0

Scoring Criteria

(a) To be scored when visual information associated with the fault or malfunction is displayed within one area. Applicable if diagnosis and repair can be accomplished successfully following symptoms derived from one display area or subassembly of the system.

(b) To be scored when two display areas must be consulted to provide visual information associated with the fault or malfunction. Two separate display areas on the system (meter panel and fault indicators) must be consulted to diagnose malfunctions successfully.

(c) To be scored when more than two areas or subassemblies must be consulted to provide visual information associated with the fault or malfunction. This would be indicative of a least maintainable condition.

(8) Fault and Operation Indicators (Built-In Test Equipment): Determines if an equipment malfunction or fault is clearly discernible via audible alarms, indicators, etc., and that such information is clearly presented for rapid maintenance action. The use of indicators is increased as

Source: https://assist.dla.mil -- Downloaded: 2017-02-16T09:13Z
Check the source to verify that this is the current version before use.

complexity increases, and equipment availability becomes more important. Although visual and audio alarms usually indicate that a problem exists, they do not always determine the exact location of the malfunction. The more precise the indication, the better the maintenance condition.

Scores

(a) Fault or malfunction information is provided clearly and for rapid action 4

(b) Fault or malfunction information clearly presented, but requires operator interpretation 2

(c) Fault or malfunction information requires no operator interpretation, but is not clearly presented. 2

(d) Fault or malfunction information not clearly presented and requires operator interpretation 0

Scoring Criteria

(a) To be scored when an equipment fault or malfunction occurs and is evidenced by alarms, indicators, etc., which provide for rapid diagnosis and maintenance action. An example of this would be when a power supply failure occurs because of an open fuse which is pointed out by an indicator or alarm.

(b) To be scored when an equipment fault or malfunction occurs and is evidenced by alarms, indicators, etc., but requires further tests for isolation of the fault. Loss of output power is evidenced by an alarm; however, further diagnosis must be made to determine the exact cause of trouble.

(c) To be scored when an equipment fault or malfunction occurs and is not clearly determined by alarms, indicators, etc., however, provisions for rapid diagnosis and maintenance action are available. Applies when some preliminary testing might be required to determine if a fault or malfunction such as the loss of some voltage, (B +, Bias, etc.) exists. Once determined, however, maintenance is expedited, such as in the case of an open fuse.

Source: https://assist.dla.mil -- Downloaded: 2017-02-16T09:13Z
Check the source to verify that this is the current version before use.

(d) To be scored when an equipment fault or malfunction occurs and is not clearly discernible, and which requires symptom interpretation. Testing is also necessary to determine the equipment status and cause of failures.

(9) Test Points (Availability): Determine if test points are available for needed tests pertaining to maintenance action. A test point shall be considered as any test probe receptacle where specific system operation data can be obtained. This definition eliminates as test points connector pins, on printed circuit boards, terminals, tube pins, etc. The number of test points available and the amount of information yielded will affect the time to establish the cause and location of fault.

Scores

(a) Task did not require use of test points 4

(b) Test points available for all needed tests 3

(c) Test points available for most needed tests 2

(d) Test points not available for most needed tests 0

Scoring Criteria

(a) To be scored when the maintenance action did not require the use of test points, but when, instead, the malfunction can be diagnosed and repaired via built-in test equipment.

(b) To be scored when all needed tests were accomplished at test points. Sufficient information to diagnose and repair the trouble was available at test points.

(c) To be scored when at least 51% of the required tests were accomplished at test points. Troubleshooting required that several separate tests, most of which made use of test points, had to be made.

(d) To be scored when the majority of needed tests were not accomplished at test points. Malfunction diagnosis and repair required the making of tests for which few or no test points were available.

Source: https://assist.dla.mil -- Downloaded: 2017-02-16T09:13Z
Check the source to verify that this is the current version before use.

(10) Test Points (Identification): Determines if all test points required during the maintenance action are properly identified by circuit symbol and pertinent test data. This precise information provides diagnostic data to aid in troubleshooting the malfunction.

Scores

(a) All test points are identified with required readings given 4

(b) Some are suitably marked 2

(c) Points are not marked and test data are not given 0

Scoring Criteria

(a) To be scored when all test points needed for task completion are identified (circuit symbol), with required readings given (+6VDC, -18VDC, 115VAC, etc.). This is indicative of a best maintainable condition.

(b) To be scored when the majority of test points required for task completion are suitably identified.

(c) To be scored when test points required for task completion are not suitably identified. Troubleshooting at test points is a cause for delay because required voltage readings, signal characteristics, etc., are not specified. This would indicate that a least maintainable condition exists.

(11) Labelling: Determines if parts associated with the maintenance actions are identified with respect to circuit symbol and part identification. Proper identification of parts can be an important asset to the maintenance task in that, if part circuit number is omitted from the equipment, considerable time could be wasted tracing the circuit to identify it. Similarly, if information is "hidden", requiring removal of other parts to read it, much time will be consumed.

Source: https://assist.dla.mil -- Downloaded: 2017-02-16T09:13Z
Check the source to verify that this is the current version before use.

Scores

(a) All parts labelled with full identifying information, and all identifying information clearly visible 4

(b) All parts labelled with full identifying information, but some information hidden 2

(c) All information visible, but some parts not fully identified 2

(d) Some information hidden and some parts not fully identified 0

Scoring Criteria

(a) To be scored when all parts associated with the maintenance action are identified and this information is clearly visible. To include testing or removing of parts that are clearly identified (V401-6BE6) or (R-1225-400Ω).

(b) Applies when all parts associated with the maintenance action are identified, but some of this information is not visible. Applies to testing or removing parts that are labelled, but which information is hidden by obstructions.

(c) Applicable when all circuit symbols are visible, but some parts associated with the tasks are not identified. Parts required for testing or removal are not identified with reference to part value, etc.

(d) To be scored when some parts associated with the maintenance task contain hidden circuit symbols and are not fully identified. Parts required in testing or removal are not identified and information is also hidden.

(12) Adjustments: Determines if adjustments such as tuning and alignment are required, after a maintenance action, to make the equipment operate according to specifications. An adjustment will be any action which resets or changes variable components such as potentiometers, variable capacitors, slug-tuned coils, etc., whereby the operation of the

Source: https://assist.dla.mil -- Downloaded: 2017-02-16T09:13Z
Check the source to verify that this is the current version before use.

system assembly or subassembly is affected. These actions, depending upon their criticality and frequency, will affect the overall maintenance time.

Scores

(a) No adjustments or realignment are necessary to place equipment back in operation 4

(b) A few adjustments, but no major realignments are required 2

(c) Many adjustments or major realignments must be made 0

Scoring Criteria

(a) To be scored when no adjustments are required to bring the equipment back to normal operating specifications. Applies to repair of the malfunction, if the equipment need only be turned on.

(b) To be scored when a few adjustments of a minor nature are required to place equipment back in operation according to specifications.

(c) To be scored when many adjustments (time-consuming) or a major tuning or alignment is required to place equipment back to normal operating specifications.

(13) Testing (In Circuit): Determines if the defective component or part can be tested without removal from the circuit. This question is based on the nature of the equipment and the repair concepts associated with the particular design.

Scores

(a) Defective part or component can be determined without removal from the circuit 4

(b) Testing requires removal 0

Source: https://assist.dla.mil -- Downloaded: 2017-02-16T09:13Z
Check the source to verify that this is the current version before use.

Scoring Criteria

(a) Applicable when the component or part can be decisively determined as being defective without removal of any part from the circuit.

(b) To be scored when the component or part must be removed from the circuit to be decisively determined as defective. When testing has isolated the trouble to a particular part or component, however, a definite opinion cannot be made until such part or component is electrically or physically removed from the circuit for further testing.

(14) Protective Devices: Encompasses equipment design provisions for self-protection against damage to components or parts after a malfunction has occurred. If a system has protection devices such as fuses, circuit breakers, etc., then the equipment can be protected from further damage as well as aiding in isolating the malfunction. If no provisions have been made, further damage and increased repair time could result.

Scores

(a) Equipment was automatically kept from operating after malfunction occurred to prevent further damage. (This refers to malfunction of such areas as bias supplies, keep-alive voltages, etc.) 4

(b) Indicators warned that malfunction has occurred 2

(c) No provisions have been made 0

Scoring Criteria

(a) To be scored when automatic shut-off devices protected parts or components from further damage after a malfunction occurred in a critical area. A typical example of such a malfunction would be if the Bias supply fails and B+ voltage is automatically cut off by circuit breakers, fuses, or relay action.

Source: https://assist.dla.mil -- Downloaded: 2017-02-16T09:13Z
Check the source to verify that this is the current version before use.

(b) To be scored when automatic shut-off-devices do not protect parts or components from further damage, but when visual indicators or audible alarms warn personnel of the situation.

(c) To be scored when a critical malfunction occurs and parts or components are not protected by automatic shut-off devices, indicators, or alarms. Involves malfunction which damages parts or components because automatic shut-off devices or alarms were not provided.

(15) Safety (Personnel): Determines if the maintenance action requires personnel to work under hazardous conditions such as close proximity to high voltage, radiation, moving parts, high-temperature components, or on elevated structures, etc.

Scores

(a) Task did not require work to be performed in close proximity to hazardous conditions (high voltage, radiation, moving parts and/or high temperature parts) 4

(b) Some delay encountered because of precautions taken 2

(c) Considerable time consumed because of hazardous conditions 0

Scoring Criteria

(a) To be scored when the maintenance action did not require personnel to work under hazardous conditions. The maintenance action did not require precautions to be taken, in that the task was not associated with high voltage, moving parts, etc.

(b) To be scored when precautions were taken because of hazardous conditions causing slight delays in the maintenance action. A typical example would be when a shorting probe must be used to discharge high-voltage capacitors.

Source: https://assist.dla.mil -- Downloaded: 2017-02-16T09:13Z
Check the source to verify that this is the current version before use.

(c) To be scored when precautions taken because of hazardous conditions caused a considerable delay to the maintenance action. Maintenance required that testing be done in close proximity to high voltage where extreme caution was necessary, or the closeness of moving parts (gears, motors, etc.), caused delay because of precautions taken.

CHECK LIST B - SCORING DESIGN DICTATES-FACILITIES

The intent of this questionnaire is to determine the need for external facilities. Facilities, as used here, include material such as test equipment, connectors, etc., and technical assistance from other maintenance personnel, supervisor, etc.

(1) External Test Equipment: Determines if external test equipment is required to complete the maintenance action. The type of repair considered maintainably ideal would be one which did not require the use of external test equipment. It follows, then, that a maintenance task requiring test equipment would involve more task time for set-up and adjustment and should receive a lower maintenance evaluation score.

Scores

(a) Task accomplishment does not require the use of external test equipment 4

(b) One piece of test equipment is needed 2

(c) Several pieces (2 or 3) of test equipment are needed 1

(d) Four or more items are required 0

Scoring Criteria

(a) To be scored when the maintenance action does not require the use of external test equipment. Applicable when the cause of malfunction is easily detected by inspection or built-in test equipment.

Source: https://assist.dla.mil -- Downloaded: 2017-02-16T09:13Z
Check the source to verify that this is the current version before use.

(b) To be scored when one piece of test equipment was required to complete the maintenance action. Sufficient information was available through the use of one piece of external test equipment for adequate repair of the malfunction.

(c) To be scored when 2 or 3 pieces of external test equipment are required to complete the maintenance action. This type malfunction would be complex enough to require testing in a number of areas with different test equipments.

(d) To be scored when four or more pieces of test equipment are required to complete the maintenance action. Involves an extensive testing requirement to locate the malfunction. This would indicate that a least maintainable condition exists.

(2) Connectors: Determines if supplementary test equipment requires special fittings, special tools, or adapters to adequately perform tests on the electronic system or sub-system. During troubleshooting of electronic systems, the minimum need for test equipment adapters or connectors indicates that a better maintainable condition exists.

Scores

(a) Connectors to test equipment require no special tools, fittings, or adapters 4

(b) Connectors to test equipment require some special tools, fittings, or adapters (less than two) 2

(c) Connectors to test equipment require special tools, fittings, and adapters (more than two) 0

Scoring Criteria

(a) To be scored when special fittings or adapters and special tools are not required for testing. This would apply to tests requiring regular test leads (probes or alligator clips) which can be plugged into or otherwise secured to the test equipment binding post.

Source: https://assist.dla.mil -- Downloaded: 2017-02-16T09:13Z
Check the source to verify that this is the current version before use.

(b) Applies when one special fitting, adapter or tool is required for testing. An example would be if testing had to be accomplished using a 10 db attenuator pad in series with the test set.

(c) To be scored when more than one special fitting, adapter, or tools is required for testing. An example would be when testing requires the use of an adapter and an RF attenuator.

(3) Jigs or Fixtures: Determines if supplementary materials such as block and tackle, braces, dollies, ladder, etc., are required to complete the maintenance action. The use of such items during maintenance would indicate the expenditure of a major maintenance time and pinpoint specific deficiencies in the design for maintainability.

Scores

(a) No supplementary materials are needed to perform task 4

(b) No more than one piece of supplementary material is needed to perform task 2

(c) Two or more pieces of supplementary material are needed 0

Scoring Criteria

(a) To be scored when no supplementary materials (block and tackle, braces, dollies, ladder, etc.) are required to complete maintenance. Applies when the maintenance action consists of normal testings and the removal or replacement of parts or components can be accomplished by hand, using standard tools.

(b) To be scored when one supplementary material is required to complete maintenance. Applies when testing or when the removal and replacement of parts requires a step ladder for access or a dolly for transportation.

(c) To be scored when more than one supplementary material is required to complete maintenance. Concerns the maintenance action requiring a step ladder and dolly adequately to test and remove the replaced parts.

Source: https://assist.dla.mil -- Downloaded: 2017-02-16T09:13Z
Check the source to verify that this is the current version before use.

(4) Visual Contact: Determines if the nature of the equipment, location, or maintenance action causes the members of a team to be hidden from the view of each other at times during the task.

Scores

(a) The activities of each member are always visible to the other member 4

(b) On at least one occasion, one member can see the second, but the reverse is not the case 2

(c) The activities of one member are hidden from the view of the other on more than one occasion . . . 0

Scoring Criteria

(a) Applies when the team members are visible to each other during the entire maintenance action.

(b) To be scored if one member of the team becomes hidden from view of the other member or members during the maintenance action.

(c) Applicable if team members are hidden from view on more than one occasion.

(5) Assistance (Operations Personnel): Determines whether or not information or assistance from operations personnel is required, and if required, to what extent.

(a) Task did not require consultation with operations personnel . . 4

(b) Some contact was required 2

(c) Considerable coordination required 0

Scoring Criteria

(a) To be scored when the maintenance action does not require the assistance of operations personnel. This would apply if physical or verbal aid to the technical personnel was not required. (Less than one minute.)

Source: https://assist.dla.mil -- Downloaded: 2017-02-16T09:13Z
Check the source to verify that this is the current version before use.

(b) To be scored when the maintenance action requires a small amount of assistance from operations personnel. (One to five minutes.)

(c) To be scored when the maintenance action requires considerable assistance from operation personnel in the operation or repair of the malfunctioning equipment. (Over five minutes.)

(6) Assistance (Technical Personnel): Determine the number of technical personnel required to complete the maintenance action, not including administrative or operations type personnel.

Scores

(a) Task required only one technician for completion 4

(b) Two technicians were required 2

(c) Over two were used 0

Scoring Criteria

(a) To be scored when only one technician was required to complete the maintenance action.

(b) To be scored when two technicians were required to complete the maintenance action.

(c) To be scored when more than two technicians were required to complete the maintenance action.

(7) Assistance (Supervisors or Contractor Personnel): Determines whether or not the services of supervisor or contractor personnel (TECH. REPS.) were required to complete the maintenance action and the extent of their participation in the task.

Scores

(a) Task completion did not require consultation with supervisor or contract personnel 4

Source: https://assist.dla.mil -- Downloaded: 2017-02-16T09:13Z
Check the source to verify that this is the current version before use.

(b) Some help needed 2

(c) Considerable assistance needed 0

Scoring Criteria

(a) To be scored when no supervisor or contractor personnel are consulted during the maintenance action.

(b) To be scored when a small amount of assistance from supervisor or contractor personnel is required to complete the maintenance action.

(c) To be scored when considerable assistance from supervisor or contractor personnel is required to complete the maintenance action.

CHECK LIST C - SCORING DESIGN DICTATES-MAINTENANCE SKILLS

This check list evaluates the personnel requirements relating to physical, mental, and attitude characteristics, as imposed by the maintenance task.

Evaluation procedure for this check list can best be explained by way of several examples. Consider first question which deals with arm, leg and back strength. Should a particular task require the removal of an equipment drawer weighing 100 pounds, this would impose a severe requirement on this characteristic. Hence, in this case the question would be given a low score (0 to 1). Assume another task which, due to small size and delicate construction, required extremely careful handling. Here question 1 would be given a high score (4), but the question dealing with eye-hand coordination and dexterity would be given a low score. Other questions in the check list relate to various personnel characteristics important to maintenance task accomplishment. In completing the check list, the task requirements for each of these characteristics should be viewed with respect to average technician capabilities.

Scores

	Score
1. Arm, Leg, and Back Strength	_____
2. Endurance and Energy	_____

Source: https://assist.dla.mil -- Downloaded: 2017-02-16T09:13Z
Check the source to verify that this is the current version before use.

	Score
3. Eye-Hand Coordination, Manual Dexterity, and Neatness	_____
4. Visual Acuity	_____
5. Logical Analysis	_____
6. Memory - Things and Ideas	_____
7. Planfulness and Resourcefulness	_____
8. Alertness, Cautiousness, and Accuracy	_____
9. Concentration, Persistence and Patience	_____
10. Initiative and Incisiveness	_____

Scoring Criteria

Quantitative evaluation of these items range from 0 to 4 and are defined in the following manner:

4. The maintenance action requires a minimum effort on the part of the technician.

3. The maintenance action requires a below average effort on the part of the technician.

2. The maintenance action requires an average effort on the part of the technician.

1. The maintenance action requires an above average effort on the part of the technician.

0. The maintenance action requires a maximum effort on the part of the technician.

These criteria will be used in scoring the following specific divisions of physical, mental, and motor requirements.

Source: https://assist.dla.mil -- Downloaded: 2017-02-16T09:13Z
Check the source to verify that this is the current version before use.

(1) Arm, leg and back strength: Determines the degree of arm, leg, and back strength required to complete the maintenance action. Refers to any effort, no matter how minimal. Varying degrees of strength are required for various maintenance actions are related to equipment design.

(2) Endurance and energy: Determines the degree of endurance and energy required to complete the maintenance action. Endurance might be referred to as the physical counterpart of patience, where a sustained physical effort is required. Energy required to complete the maintenance action when the task requires vigorous activity or exertion by the technician is also assessed. This applies to the necessity of lifting and carrying heavy assemblies, tools, or parts.

(3) Eye-hand coordination, manual dexterity, and neatness: Determines the degree of eye-hand coordination required to complete the maintenance action. Refers to any act involving the use of the eyes while manipulating the hands to accomplish the same action. This type of action would be applicable mostly in testing and measuring activities; however, it is not inconceivable that this item would also be applicable in other areas of the maintenance action. Scoring shall be proportional to the degree or the intensity of the requirements of the task.

Determines the degree of manual dexterity required to complete the maintenance action. When the skillful use of the hands is required to accomplish the task, appropriate degrees of necessity shall be established. Those type actions involving manual dexterity would more naturally apply to the repair, assembly, or disassembly of equipments rather than the troubleshooting processes.

Also determines the degree of neatness required by the maintenance action. Applies specifically to the requirement of the actual repair where tidiness is of prime importance to accomplish the task adequately. Since equipment is designed and constructed in accordance with quality control specifications, it is important to consider the care which has to be exercised during a particular repair.

(4) Visual Acuity: Determines the degree of visual acuity required to complete the maintenance task. When the maintenance action is such that the visual accuracy of the technician is required to accomplish the task,

Source: https://assist.dla.mil -- Downloaded: 2017-02-16T09:13Z
Check the source to verify that this is the current version before use.

a degree of requirement shall be established. Such actions shall include the need for accurate and precise visual activity in finding indications of trouble, faulty components, or the visual sensitivity sometimes necessary in reading certain oscilloscope presentations.

(5) Logical Analysis: Determines the degree of logical analysis required to complete the maintenance action. Refers to the need for involved logical analysis or for extensive mental reasoning to determine the origin of the fault or malfunction. If the problem is such that it requires orientation on the logical signal sequence, then this shall also be considered as part of this question.

(6) Memory: Things and ideas: Determines the degree to which the maintenance action requires a knowledge of the equipment past history with reference to component or part failure, tools to be used, and sequences to be followed (assembly, disassembly, etc.).

Also determines the degree to which the maintenance action requires a previous knowledge of the equipment. Refers to the degree that the task requires recall of concepts or principles of operation, function and operation of circuits and parts, or electronic theory and maintenance procedures.

(7) Planfulness and resourcefulness: Determines the degree of planning required to complete the maintenance action successfully. Refers to the extent to which the task requires a planned and methodical approach to assure rapid diagnosis and repair of the equipment fault or malfunction.

Also determines the degree of resourcefulness required to complete the maintenance action. Refers to the capabilities necessary in dealing with a situation or in meeting difficulties pertaining to the diagnosis and repair of the equipment. Conditions sometimes exist where certain needed materials such as tools, test equipment, or technical publications are not available, although substitution is possible, by some improvised method, to accomplish the task adequately.

(8) Alertness, cautiousness, and accuracy: Alertness is a readiness or promptness in comprehending and a keen awareness and knowledge of all events or factors affecting the maintenance action. Cautiousness is the exercise of forethought so that risks may be avoided or minimized

Source: https://assist.dla.mil -- Downloaded: 2017-02-16T09:13Z
Check the source to verify that this is the current version before use.

during the maintenance action. (A surveyance of all possible consequences before making a decision.) Accuracy is attained by the exercise of care by showing close attention to the details of the maintenance task and cautiousness in avoiding errors. The design requirements for these characteristics are to be assessed.

(9) Concentration, persistence, and patience: Concentration is the close mental application or exclusive attention to the maintenance task and the direct focusing of the mind upon one thing to the exclusion of everything else. Persistence refers to maintenance tasks with the implication of being able to carry performance to a successful conclusion. Patience is the quiet perseverance, calmness in working, and being undisturbed by obstacles, delays, or failures which might occur during the maintenance task.

(10) Initiative and incisiveness: Initiative is the energy or aptitude displayed in the initiation of action and the ability or power to introduce a new measure or course of action. Incisiveness is the keenness of mind and acuteness of understanding the task at hand.

Source: https://assist.dla.mil -- Downloaded: 2017-02-16T09:13Z
Check the source to verify that this is the current version before use.

PROCEDURE IV

1.0 GENERAL

This procedure is based on the use of historical experience, subjective evaluation, expert judgement and selective measurement for predicting the downtime of a system/equipment. The procedure uses existing data to the extent available. It provides an orderly process by which the prediction can be made and integrates preventive and corrective maintenance. Task times to perform various maintenance actions are estimated and then combined to predict overall system/equipment maintainability.

1.1 Philosophy, Assumptions and Summary

This procedure recognizes that throughout a mission, a system/equipment performs various operational functions and that the maintenance time depends upon the specific operational function which is in process. To clearly understand the meaning of an operational function we will discuss the mission of a commercial airliner as an example.

Prior to take-off the first operational function is to warm up the engines and perform a preventive maintenance check out. During this period a failure may occur (associated with this first operational function) which requires corrective maintenance action. This is the type of failure which is readily detectable such as a malfunctioning engine. A failure requiring corrective maintenance may also be detected during the specified scheduled preventive maintenance routine which involves a detailed checking of all instrument readings.

A similar type of reasoning is applicable to other operational functions of the aircraft such as taxiing down the field, in flight and landing. As a general definition applicable to all systems either mechanical or electro-mechanical, an operational function is defined as that particular function which the system is performing at the specific interval of time during which the maintainability analysis is being conducted. In other words, the procedure requires the development of a mission/maintenance profile which specifies the various operational functions of the system and the scheduled preventive maintenance actions required for each operational function.

Another significant assumption is that the estimate of task times can be made best by a maintenance analyst working closely with the design engineer, or by the design engineer himself. Therefore, it is assumed that the maintenance task times so estimated are practical, realistic and applicable for performing a maintainability prediction.

Source: https://assist.dla.mil -- Downloaded: 2017-02-16T09:13Z
Check the source to verify that this is the current version before use.

1.2 Applicability

Because of the nature of the time estimating techniques, this procedure is applicable to all systems/equipments.

1.3 Point of Application

Time analysis can be performed as soon as sufficient system/equipment definition exists. This level of definition for initial estimations is usually available fairly early in the definition phase. The application of the time estimating procedures will permit the updating of the equipment design and can, therefore, take place throughout the design and development phases.

1.4 Basic Parameters of Measurement

The intrinsic maintainability of the system/equipment is predicted under the assumption of optimum utilization of specified support equipment and personnel. The intrinsic maintainability is given by the following parameters.

Mean Corrective Downtime - MCDT

Mean Preventive Downtime - MPDT

Total Mean Downtime - TMDT

1.5 Information Required

The following information concerning the operational and maintenance environment of the system and subsystems is required to make the initial maintenance task time analysis. Subsequent schematics, assembly drawings, etc., will be used for updating this time estimation as the system design continues.

a. System Block Diagram

b. Functional Flow Diagrams

c. Subsystem Block Diagrams

d. Subsystem Flow Diagrams

e. End Item List

Source: https://assist.dla.mil -- Downloaded: 2017-02-16T09:13Z
Check the source to verify that this is the current version before use.

f. End Item Failure Rates

g. Maintenance Concept

h. Maintainability Goals

i. Operational Resources (facilities, personnel, support equipment, etc.)

j. A detailed definition of the task being performed

k. Location at which the task is being performed

l. Environmental Constraints

1.6 Data Basis

This procedure utilizes expert judgment and existing data sources on maintenance task time, but the procedure does not rely solely on existing data. The applicability of the data is decided by the analyst and is supplemented by his expert judgment in estimating maintenance task time when such information is not available.

1.7 Correlation Between Predicted and Observed Values

Procedures similar to this one have been applied selectively and verified to a high degree of accuracy. This accuracy is applicable only where specific maintenance actions and equipment end items are being analyzed, and is dependent upon the qualifications of the personnel performing the evaluation.

2.0 ANALYTIC FOUNDATION

2.1 General

The analytical foundation of the task analysis procedure integrates the development of task performance time for preventive and corrective maintenance actions. A maintenance action is defined as the exclusive maintenance task which occurs at a specific location and within a specific set of conceptional and physical constraints. This maintenance action permits the logical development of elapsed times, subsystem equipment levels.

The mean corrective maintenance time for the system/equipment will vary for each individual scheduled preventive maintenance action applicable to a specific

Source: https://assist.dla.mil -- Downloaded: 2017-02-16T09:13Z
Check the source to verify that this is the current version before use.

operational function. The task analysis procedure permits the evaluation of these times from the end item up to the system level. The products of the procedure are:

a. The elapsed time to perform preventive maintenance action, assuming that no detectable malfunctions exist in the system.

b. The elapsed time to correct malfunctioning end items detected during each preventive maintenance action of an operational function.

c. The distribution of corrective maintenance times for detectable malfunctioning end items for each preventive maintenance action of an operational function.

d. The mean corrective downtime (MCDT) for detectable malfunctioning end items for each preventive maintenance action of an operational function.

e. The distribution of corrective maintenance task times for the system and subsystems.

f. The preventive downtime (PDT) for the system and subsystems for a specified calendar time.

g. The total mean corrective downtime (MCDT) for the system and subsystems for a specified calendar time.

h. The total mean downtime for integrated preventive and corrective maintenance for the system and subsystems for a specified calendar time.

These maintenance downtimes relate only to the inherent maintainability of the equipment, since administrative and other delays are not normally definable during the design of the equipment. The estimated elapsed time required to perform maintenance on a system will vary as a function of the conceptional and physical constraints within which the estimation was made. These constraints consist of the availability of physical resources (i.e., personnel, spares and consumables, support equipment, and facilities) and applicable maintenance and operational concepts (i.e., testing concept, level of repair, mission descriptions, etc.). The applicability of specific constraints must be documented if a given time estimate is to be meaningful. Only single elapsed times are estimated for each maintenance task. This number should approximate the mean time required to perform the task under actual conditions. The correlation

Source: https://assist.dla.mil -- Downloaded: 2017-02-16T09:13Z
Check the source to verify that this is the current version before use.

between estimated and verified task times described in paragraph 1.7 justifies the use of single values for the purposes of this procedure.

A series of mission/maintenance profiles will be established based on the system operational requirements. These profiles shall specify the schedules of operational functions and preventive maintenance actions for a given calendar time. The mean corrective downtime and preventive downtime for the system are calculated in sequence by function, mission/maintenance profile, and complete system. A procedural flow block diagram of the procedure is shown in Figure 4-1. An explanation of each block in the diagram follows:

The end items (1) of the system are identified and categorized under the appropriate headings as: system, subsystem, assembly, etc., down to the smallest piece of equipment on which a specific maintenance action will be accomplished. The failure rate is identified for each end item. The preventive maintenance actions of an operational function (2) to be performed on the categorized end items are defined (e.g., check out, servicing, adjustment, etc.). The physical and conceptual constraints previously described must be defined and documented for each function. The corrective maintenance actions (3) to be performed on appropriate categorized end items are defined. These actions will include, but are not necessarily limited to the maintenance actions of test, remove, replace, adjust, repair, etc., specified by the applicable constraints. The physical and conceptual constraints previously described defined a set of corrective action, which can be undertaken. The detectable end item malfunctions for each preventive maintenance action of an operational function are defined, (4). Those end items which can be detected as malfunctioned, but which cannot be corrected (within the constraints of the location at which the maintenance is occurring), are grouped. No troubleshooting will be conducted within these groups of end items since, by definition, no corrective action can be undertaken. A task analysis is conducted for each preventive maintenance action (5). A distribution of end item task times and a total time for each operational function is generated. The total task time for the operational function is compared to the allocated time to determine if the maintainability design of the equipment is adequate. If not, the distribution of end item task times permits identification of critical design points. A task analysis is conducted for corrective maintenance (6) associated with each of the preventive maintenance of an operational function. This analysis is conducted by deriving the troubleshooting, repair, and verification time for each end item previously defined as a detectable and repairable malfunction. These times are described in terms of a distribution of end item corrective maintenance times versus frequency of occurrence and by a mean corrective downtime (MCDT) for the specified operational function. As before, the MCDT and distributions are used to identify critical design points. The preventive and corrective maintenance

Source: https://assist.dla.mil -- Downloaded: 2017-02-16T09:13Z
Check the source to verify that this is the current version before use.

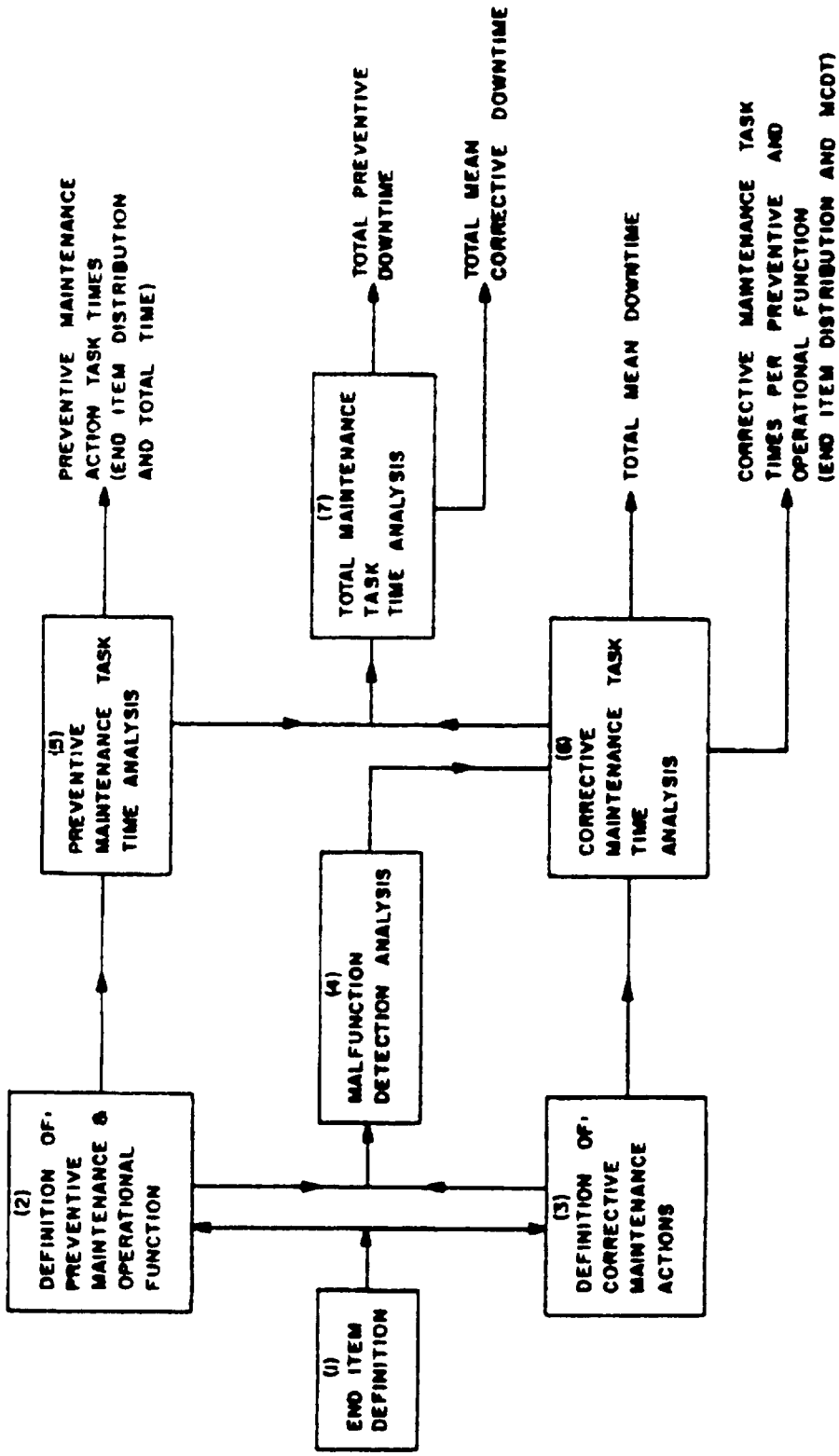

Figure 4-1. Procedural Flow Block Diagram

Source: https://assist.dla.mil -- Downloaded: 2017-02-16T09:13Z
Check the source to verify that this is the current version before use.

times and associated MCDT's are integrated (7) over the previously specified calendar time (e.g., 6 months) to derive the total preventive downtime, total mean corrective downtime, and the total mean downtime, where all times are related to the inherent maintainability characteristics of the system and exclude administrative and other delays.

2.2 Theoretical Considerations

A parametric description of the previously described procedure is provided in the following paragraphs and is referenced to the numbered blocks in Figure 4-1.

2.2.1 End Item Identification

Each end item of the system is described by I_i such that I_1, I_2 . . . . I_{n-1}, I_n are inclusive of all end items within the system. The failure rate of each end item is given by λ_i, where λ_i is assumed to be a constant over the specified calendar time, and where λ_i is the failure rate of end item I_i, etc.

2.2.2 Operational Function

The preventive maintenance actions of an operational function associated with the system are given by P_j such that P_1, P_2 . . . . P_{m-1}, and P_m are inclusive of all preventive maintenance actions and where each action is defined by type (e.g., inspection, servicing, etc.) and by physical and conceptual constraints (e.g., personnel, spares and consumables, support equipment, facilities, testing concepts, etc.). A new function must be defined if the type or constraints are modified.

A subset of I_i is associated with each function P_j. The operational functions of the system are given by O_r such that O_1, O_2 . . . . O_{r-1}, O_r are inclusive of all operational functions, where each function is defined by the end items of the system being used. An operational function must be defined for each different subset of I_i utilized during the operation of the system. By definition, all end items I_1, I_2 . . . . I_{n-1}, I_n will appear in at least one subset of I_i, associated with the preventive maintenance action of an operational function.

2.2.3 Corrective Maintenance Action Definition

The corrective maintenance actions associated with the system are given by C_1, C_2 . . . C_{g-1}, and C_g are inclusive of all corrective maintenance actions where each action is a maintenance action taken to correct a detected malfunction

Source: https://assist.dla.mil -- Downloaded: 2017-02-16T09:13Z
Check the source to verify that this is the current version before use.

indication (e.g., test, remove, replace, adjust, repair, verify, etc.) within a specific subset of constraints. The actions are assigned to each system end items so that the times involved are exclusive to the individual end items, (e.g., the removal of an end item, assuming that all access to that item has been accomplished).

2.2.4 Malfunction Detection Analysis

The concept on which the analytical procedures are based prescribes that only those system end items (I_i) which can cause identifiable malfunction indications during the preventive maintenance, P_m, action or operational, O_r, functions will contribute to the mean corrective downtime for that function. The probability that corrective maintenance will occur is a function of the $\sum \lambda_i$, of the subset of I_i associated with the specific function. The end items I_1, I_2 . . . I_n are assumed to have only one failure mode for purposes of this discussion. However, in some cases it may be necessary to specify the various possible failure modes (e.g., for a resistor - open, shorted, etc.) to provide adequate downtime estimation accuracies. The determination of the necessary level of definition required to achieve specific accuracies of the task time estimation is beyond the scope of this document. Those end item failures which can be detected but not repaired within the constraints associated with a specific preventive maintenance action or an operational function will be grouped into the smallest isolatable "black boxes". The identification of one of these "black boxes" as being failed will require that the system be transferred to another function (e.g., the system shifted to a degraded operational mode or the actual equipment moved to another maintenance area).

2.2.5 Preventive Maintenance Task Time Analysis

The task times for preventive maintenance actions are given by:

$$PDT_m = \sum_{i=1}^{m} T_{i_m}$$

where: PDT_m = The total preventive maintenance performance time for action P_m

T_{i_m} = The time to perform the maintenance task on end item I_i as required by action P_m

A distribution of the individual task times within each action can be developed to identify critical design points as previously described.

Source: https://assist.dla.mil -- Downloaded: 2017-02-16T09:13Z
Check the source to verify that this is the current version before use.

2.2.6 Corrective Maintenance Task Time Analysis

The end items defined in 2.2.4 as being detectable during a specific preventive maintenance action or an operational function serve as a starting point in the conduct of the corrective maintenance task analysis. The fault isolation concept for the system under action, P_m of an O_r function, is defined. The troubleshooting, repair, and verification time for repairable end items, or the troubleshooting time for non-repairable end item groups are derived based on the defined fault isolation concept. Thus, for action P_m:

Item 1: $T_{1_m} = (\sum T_{s_{1_m}}) + T_{c_{1_m}} + T_{v_{1_m}}$

Item 2: $T_{2_m} = (\sum T_{s_{2_m}}) + T_{c_{2_m}} + T_{v_{2_m}}$

Item n: $T_{n_m} = (\sum T_{s_{n_m}}) + T_{c_{n_m}} + T_{v_{n_m}}$

Item i^{th}: $T_{i_m} = (\sum T_{s_{i_m}}) + T_{c_{i_m}} + T_{v_{i_m}}$

where:

T_{i_m} = The total time required to correct malfunctioning end item I_i during action P_m of an operational function

$T_{s_{i_m}}$ = The troubleshooting test times required to isolate end item I_i during action P_m

$T_{c_{i_m}}$ = The time required to remove, replace, adjust, or otherwise repair malfunctioning end item I_i during action P_m

$T_{v_{i_m}}$ = The time required to verify that the system is good, given that I_i is replaced, repaired, adjusted, etc., during action P_m

For function O_r:

Item 1: $T_{1_r} = (\sum T_{s_{1_r}}) + T_{c_{1_r}} + T_{v_{1_r}}$

Source: https://assist.dla.mil -- Downloaded: 2017-02-16T09:13Z
Check the source to verify that this is the current version before use.

Item 2: $T_{2_r} = (\sum T_{s_{2_r}}) + T_{c_{2_r}} + T_{v_{2_r}}$

Item n: $T_{n_r} = (\sum T_{s_{n_r}}) + T_{c_{n_r}} + T_{v_{n_r}}$

Item i^{th}: $T_{i_r} = (\sum T_{s_{i_r}}) + T_{c_{i_r}} + T_{v_{i_r}}$

where:

T_{i_r} = The total time required to correct malfunctioning end item I_i during function O_r

$T_{s_{i_r}}$ = The fault isolation test times required to isolate end item I_i during function O_r

$T_{c_{i_r}}$ = The time required to remove, replace, adjust, calibrate, or otherwise correct the malfunctioning end item I_i during function O_r

$T_{v_{i_r}}$ = The time required to verify that the system is good, given that I_i is replaced, repaired, adjusted, etc., during function O_r

In addition, the time to isolate the non-repairable end item groups during action P_m is given by:

$$T_{jm} = \sum T_{s_{jm}}$$

where:

T_{jm} = The total time required to isolate the jth group during action P_m of an operational function

$T_{s_{jm}}$ = The troubleshooting time required to isolate the jth group during action P_m

The time required to isolate the non-repairable end item groups during function O_r is given by:

$$T_{jr} = \sum T_{s_{jr}}$$

Source: https://assist.dla.mil -- Downloaded: 2017-02-16T09:13Z
Check the source to verify that this is the current version before use.

where:

T_{j_r} = The total time required to isolate the jth group during the function O_r

$T_{s_{j_r}}$ = The troubleshooting time required to isolate the jth group during function O_r

The mean-corrective-downtime of the system or identification of the requirement to shift it to another maintenance or operational function during action P_m is given by:

$$MCDT_m = \frac{\sum \lambda_{i_m} T_{i_m} + \sum \lambda_{i_{j_m}} \sum T_{s_{j_m}}}{\sum \lambda_{i_m} + \sum \lambda_{i_{j_m}}}$$

where:

$MCDT_m$ = The mean-corrective-downtime for the system during action P_m of an operational function

λ_{i_m} = The failure rate of detectable malfunctioning end item I_i during action P_m

$\lambda_{i_{j_m}}$ = The failure rate of the ith end item in the jth non-repairable group which can be isolated during action P_m

The mean-corrective-downtime of the system or identification of the requirement to shift to another maintenance or operational function during function O_r is given by:

$$MCDT_r = \frac{\sum \lambda_{i_r} T_{i_r} + \sum \lambda_{i_{j_r}} \sum T_{s_{j_r}}}{\sum \lambda_{i_r} + \sum \lambda_{i_{j_r}}}$$

where:

$MCDT_r$ = The mean-corrective-downtime for the system during function O_r

$\lambda_{i_{j_r}}$ = The failure rate of the ith end item in the jth non-repairable group which can be isolated during function O_r

Source: https://assist.dla.mil -- Downloaded: 2017-02-16T09:13Z
Check the source to verify that this is the current version before use.

2.2.7 Total Maintenance Task Time Analysis

A total maintenance time analysis is conducted to define the total time required to perform preventive maintenance, and the total mean-corrective-downtime, for maintenance of the system. The total time for preventive maintenance is given by:

$$PDT_t = \sum o_m \, PDT_m$$

where:

PDT_t = Total preventive-downtime during the specified calendar time

m = Frequency of occurrence of the mth preventive maintenance action during the specified calendar time

The mean-corrective-downtime for the system is derived from the mission/maintenance profiles.

The mean-corrective-downtime for the system is given by the weighted (normalized failure rates) of the MCDT for each action P_m of an O_r operational function. Therefore,

$$MCDT_s = \frac{\sum(\lambda_{i_r} + \lambda_{i_{g_r}}) \, MCDT_r + \sum(\lambda_{i_m} + \lambda_{i_{g_m}}) \, MCDT_m}{\sum(\lambda_{i_r} + \lambda_{i_{g_r}}) + \sum(\lambda_{i_m} + \lambda_{i_{j_m}})}$$

where:

$MCDT_s$ = The mean-corrective-downtime for the system for the given mission/maintenance profile

Applying the equation to a hypothetical mission/maintenance profile results in:

$$MCDT_s = \Big[\sum(\lambda_{i_{r_1}} + \lambda_{i_{g_{r_1}}}) \, MCDT_{r_1} + \sum(\lambda_{i_{m_1}} + \lambda_{i_{g_{m_1}}}) \, MCDT_{m_1} \cdot$$
$$+ \sum(\lambda_{i_{r_2}} + \lambda_{i_{g_{r_2}}}) \, MCDT_{r_2} + \sum(\lambda_{i_{m_2}} + \lambda_{i_{g_{m_2}}}) + MCDT_{m_2}$$

Source: https://assist.dla.mil -- Downloaded: 2017-02-16T09:13Z
Check the source to verify that this is the current version before use.

$$+ \sum(\lambda_{i_{r_3}} + \lambda_{i_{\theta_{r_3}}}) \, MCDT_{r_3}\Big] \Big/ \Big\{\sum\Big[(\lambda_{i_{r_1}} + \lambda_{i_{r_2}} + \lambda_{i_{r_3}})$$

$$+ (\lambda_{i_{\theta_{r_1}}} + \lambda_{i_{\theta_{r_2}}} + \lambda_{i_{\theta_{r_3}}})\Big] + \sum\Big[(\lambda_{i_{m_1}} + \lambda_{i_{m_2}})$$

$$+ (\lambda_{i_{\theta_{m_1}}} + \lambda_{i_{\theta_{m_2}}})\Big]\Big\}$$

The total mean-corrective-downtime of the system for the mission/maintenance profile is given by:

$$MCDT_t = f(MCDT_s)$$

where:

$MCDT_t$ = The total mean-corrective-downtime of the system for the mission/maintenance profile

f = The number of detectable failures occurring during the calendar time

The total mean-downtime of the system with a specified mission/maintenance profile is given by:

$$T_p = \sum a_m \, PDT_m + MCDT_t$$

where:

T_p = The total mean-downtime of the system with a specified mission/maintenance profile for the calendar time

a_m = The frequency of occurrence of the action P_m during the calendar period

The use of a mix of mission/maintenance profiles for the system gives a total mean-downtime of:

$$T_t = \frac{\sum a_p \, T_p}{\sum a_p}$$

Source: https://assist.dla.mil -- Downloaded: 2017-02-16T09:13Z
Check the source to verify that this is the current version before use.

where:

T_t = The total mean-downtime of the system for a given mix of mission/maintenance profiles

a_p = The frequency with which the pth mission maintenance profile will occur during the calendar time

3.0 APPLICATION

The development of the system maintenance times is initiated by establishing and grouping the physical and conceptual constraints existing within the maintenance environment. The allowable corrective maintenance actions (e.g., remove/replace, repair, test--troubleshoot--, adjust, etc.) are specified for each end item for each set of constraints.

Step 1 - The constraints applicable to each preventive maintenance action of an operational function, and to the corrective maintenance action are related through the use of the matrix shown in Figure 4-2.

		CORRECTIVE MAINTENANCE ACTIONS			
		C_1	C_2		C_g
PREVENTIVE MAINTENANCE ACTIONS	P_1	X			X
	P_2		X		
	P_m	X	X		X

Figure 4-2. Related Constraint Matrix

An "X" at a row/column junction of the matrix indicates that the applicable constraints to the actions P_m of an O_r will permit the accomplishment of the corrective maintenance actions (C_g).

Step 2 - An end item corrective maintenance action matrix, as shown in Figure 4-3, is used as an aid in the conduct of the task time analysis procedure. The corrective maintenance actions assigned to each end item are described to match the established physical and conceptual constraints.

Source: https://assist.dla.mil -- Downloaded: 2017-02-16T09:13Z
Check the source to verify that this is the current version before use.

A time value at the matrix junction of an end item row and an action column indicates that this end item is acted upon or utilized during that action. For example, in Figure 4-3 end item (I_1) is acted upon during corrective maintenance action (C_1).

END ITEM		CORRECTIVE MAINTENANCE ACTIONS				
I_i	λ_i	C_1	C_2	C_3		C_g
I_1	λ_1	T_{1_1}	0	T_{1_3}		T_{1_g}
I_2	λ_2	0	T_{2_2}	T_{2_3}		⋮
I_3	λ_3	T_{3_1}	0	T_{3_3}		⋮
						⋮
I_n	λ_n	T_{n_1}	- - - -	- - - -	- - - - - -	T_{n_g}

Figure 4-3. End Item/Corrective Maintenance Action Matrix

This matrix will serve to establish the corrective maintenance actions which can be undertaken on the system end items within the specified physical and conceptual constraints associated with the preventive maintenance action of an operation function.

Step 3 - An end item/preventive maintenance action matrix, as shown in Figure 4-4, is used to calculate the individual action performance time (PDT) (as described in Paragraph 2.2.5) and the related mean-corrective-downtime (MCDT) (as described in Paragraph 2.2.6).

Source: https://assist.dla.mil -- Downloaded: 2017-02-16T09:13Z
Check the source to verify that this is the current version before use.

END ITEM		PREVENTIVE MAINTENANCE ACTIONS						
I_i	λ_i	P_1 Prev.	P_1 Corr.	P_2 Prev.	P_2 Corr.		P_m Prev.	P_m Corr.
I_1	λ_1	T_{1_1}	0	0				
I_2	λ_2	T_{2_1}	T_{2_1}	0				
I_3	λ_3	0	0	T_{3_2}	(I_3)			
					$T_{P_{ij}}$ (I_{n-1})			
I_n	λ_n	0	T_{R_1}	T_{R_2}	0			T_{R_n}
		PDT_1		PDT_2			PDT_m	
			$MCDT_1$		$MCDT_2$			$MCDT_m$

$$PDT_m = \sum T_{i_m}$$

$$MCDT_m = \frac{\sum \lambda_{i_m} T_{i_m} + \sum \lambda_{i_{jm}} \sum T_{s_{jm}}}{\sum \lambda_{i_m} + \sum \lambda_{i_{jm}}}$$

Figure 4-4. End Item/Preventive Maintenance Action Matrix

Each preventive maintenance action column is divided into two parts; the first for the times required to perform the specified action on the affected end items of the system; and the second part for the times required to troubleshoot, repair, and verify detectable malfunctioning end items.

The end item/corrective maintenance action matrix is used to establish those end items which can be corrected if malfunctioning within constraints specified

Source: https://assist.dla.mil -- Downloaded: 2017-02-16T09:13Z
Check the source to verify that this is the current version before use.

for the individual preventive maintenance actions exist. The mean-corrective-downtime for each preventive maintenance action is calculated by establishing the troubleshooting paths to each detectable end item malfunction, considering the specified troubleshooting logic and constraints, and the interrelationships of the various detectable malfunctioning end items. The time t_{n_m} is placed at the end item (I_n) / action (P_m) matrix junction of Figure 4-4. This time is the summation of the troubleshooting, repair, and verification times for repairable end items. The time $T_{s_{j_m}}$ to troubleshoot non-repairable end item groups is submitted as required, as shown in Column P_2 Corr. of Figure 4-4. The non-repairable group in this example consists of end items I_4 through $I_n - 1$.

Step 4 - An end item/operational function matrix as shown in Figure 4-5 is used to calculate the $MCDT_r$ for each operational function as described in Paragraph 2.2.6.

END ITEM		OPERATIONAL FUNCTIONS				
I_i	λ_i	O_1	O_2	O_3	------	O_r
I_1	λ_1	T_{1_1}	0	0		T_{1_r}
I_2	λ_2	T_{2_1}	T_{2_2}	0		0
I_3	λ_3	0	0	T_{3_3}		0
⋮						
I_n	λ_n	0	T_{n_2}	T_{n_3}		T_{n_r}
		$MCDT_1$	$MCDT_2$	$MCDT_3$		$MCDT_r$

$$MCDT_r = \frac{\sum \lambda_{i_r} T_{i_r} + \sum \lambda_{i_{j_r}} \sum T_{s_{j_r}}}{\sum \lambda_{i_r} + \sum \lambda_{i_{j_r}}}$$

Figure 4-5. End Item/Operational Function Matrix

Source: https://assist.dla.mil -- Downloaded: 2017-02-16T09:13Z
Check the source to verify that this is the current version before use.

The $MCDT_r$ for each operational function is calculated in a manner identical to that used for the $MCDT_m$ for preventive maintenance actions.

Step 5 - The total preventive maintenance time, the total mean-corrective-downtime, and the total mean downtime for maintenance are calculated for each mission/maintenance profile as described in Paragraph 2.2.7.

Custodians:

Army - MI
Navy - AS
Air Force - 11

Review activities:

Army - EL, MI
Navy - AS, EC, OS, SH
Air Force - 11, 13, 14, 17

Preparing activity:

Navy - AS
Project No. MISC-0327

Source: https://assist.dla.mil -- Downloaded: 2017-02-16T09:13Z
Check the source to verify that this is the current version before use.

BIBLIOGRAPHY

1. Maintainability - Prediction: Theoretical Basis and Practical Approach of, USAF Aeronautical Systems Division, 15 Feb 1962.

2. Maintainability - Prediction: Theoretical Basis and Practical Approach of, USAF Aeronautical Systems Division, 31 Dec 1963.

3. Maintainability - Design Criteria Handbook for Designers of Shipboard Electronic Equipment, NAVSHIPS 94324, 30 Apr 1962.

4. A Research Plan for Developing Methods of Maintainability Measurement and Prediction, Rome Air Development Center Tech. Note No. RADC-TN-60-5, AD-231 090, 6 Jan 1960.

5. A Review of the Literature on Design of Information Job Performance Aids. Proj. No. 1710. USAF Airborne Systems Division Report No. ASDTR 61-549, 1961.

6. Maintainability Measurement and Prediction Methods for A. F. Ground Electronic Equipments, Phase II Report RADC-TN-60-221, AD-247 155, 15 Sep 1960.

7. Maintainability Measurement and Prediction Methods for A. F. Ground Electronic Equipments, Phase III Report RADC-TN-61-141, AD-262 454, 15 Jun 1961.

8. Maintainability - Prediction Technique, Phase IV Report RADC-TDR-62-156, AD-277 199, 15 Mar 1962.

9. Maintainability Engineering, Phase V Report RADC-TDR-63-85, Vol. 2, AD-404 898, 5 Feb 1963.

10. Maintainability Technique Study, Final Technical Report, Phase V Report RADC-TDR-63-85, Vol. 1, AD-404 899, 5 Feb 1963.

11. Maintainability and Supportability Evaluation Technique, Wright-Air Development Division, Part I, Part II, Vols. 1 and 2, May and Jun 1960.

Source: https://assist.dla.mil -- Downloaded: 2017-02-16T09:13Z
Check the source to verify that this is the current version before use.

Source: https://assist.dla.mil -- Downloaded: 2017-02-16T09:13Z
Check the source to verify that this is the current version before use.

INSTRUCTIONS: In a continuing effort to make our standardization documents better, the DoD provides this form for use in submitting comments and suggestions for improvements. All users of military standardization documents are invited to provide suggestions. This form may be detached, folded along the lines indicated, taped along the loose edge *(DO NOT STAPLE)*, and mailed. In block 5, be as specific as possible about particular problem areas such as wording which required interpretation, was so rigid, restrictive, loose, ambiguous, or was incompatible, and give proposed wording changes which would alleviate the problems. Enter in block 6 any remarks not related to a specific paragraph of the document. If block 7 is filled out, an acknowledgement will be mailed to you within 30 days to let you know that your comments were received and are being considered.

NOTE: This form may not be used to request copies of documents, nor to request waivers, deviations, or clarification of specification requirements on current contracts. Comments submitted on this form do not constitute or imply authorization to waive any portion of the referenced document(s) or to amend contractual requirements.

(Fold along this line)

(Fold along this line)

DEPARTMENT OF THE NAVY

NO POSTAGE NECESSARY IF MAILED IN THE UNITED STATES

OFFICIAL BUSINESS
PENALTY FOR PRIVATE USE $300

BUSINESS REPLY MAIL
FIRST CLASS PERMIT NO. 12503 WASHINGTON D. C.

POSTAGE WILL BE PAID BY THE DEPARTMENT OF THE NAVY

Commander
Naval Air Systems Command (AIR 51122)
Washington, DC 20361

Source: https://assist.dla.mil -- Downloaded: 2017-02-16T09:13Z
Check the source to verify that this is the current version before use.

STANDARDIZATION DOCUMENT IMPROVEMENT PROPOSAL

(See Instructions – Reverse Side)

1. DOCUMENT NUMBER	2. DOCUMENT TITLE

3a. NAME OF SUBMITTING ORGANIZATION	4. TYPE OF ORGANIZATION *(Mark one)*
b. ADDRESS *(Street, City, State, ZIP Code)*	☐ VENDOR ☐ USER ☐ MANUFACTURER ☐ OTHER *(Specify)*: _____

5. PROBLEM AREAS

a. Paragraph Number and Wording

b. Recommended Wording

c. Reason/Rationale for Recommendation

6. REMARKS

7a. NAME OF SUBMITTER *(Last, First, MI)* – Optional	b. WORK TELEPHONE NUMBER *(Include Area Code)* – Optional
c. MAILING ADDRESS *(Street, City, State, ZIP Code)* – Optional	8. DATE OF SUBMISSION *(YYMMDD)*

FOLD BACK THIS FORM, CLINCHING THIS LINE

DD FORM 1426, 82 MAR — PREVIOUS EDITION IS OBSOLETE

Source: https://assist.dla.mil -- Downloaded: 2017-02-16T09:13Z
Check the source to verify that this is the current version before use.