INCH-POUND

MIL-C-28876/9D
9 JULY 1992
SUPERSEDING
MIL-C-28876/9C
15 June 1988

MILITARY SPECIFICATION SHEET

CONNECTORS, FIBER OPTIC, CIRCULAR, PLUG STYLE, MULTIPLE REMOVABLE TERMINI, SCREW THREADS, WITH 90° STRAIN RELIEF, ENVIRONMENT RESISTING

This specification is approved for use by all Departments and Agencies of the Department of Defense.

The requirements for acquiring the product described herein shall consist of this specification sheet and the issue of the following specification listed in that issue of the Department of Defense Index of Specifications and Standards (DODISS) specified in the solicitation: MIL-C-28876.

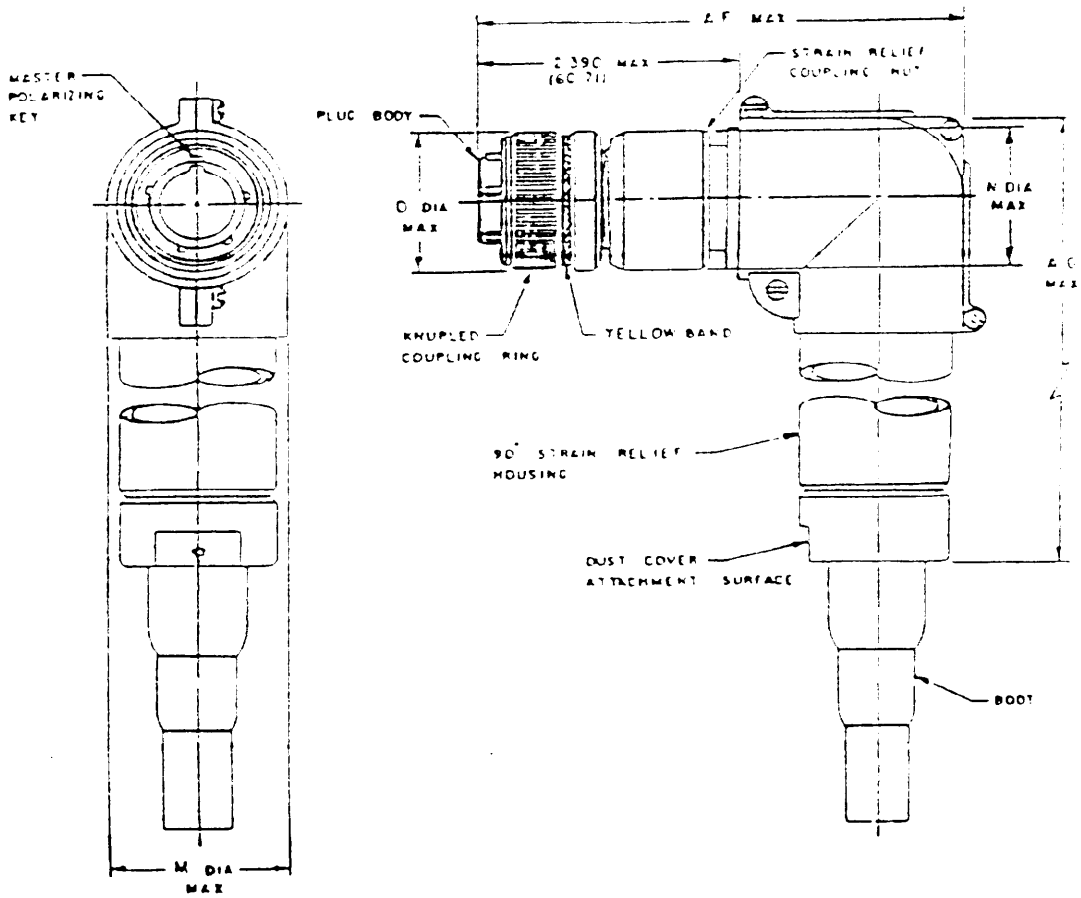

FIGURE 1. Plug connector with 90° backshell strain relief.

DISTRIBUTION STATEMENT A. Approved for public release; distribution is unlimited.

Source: https://assist.dla.mil -- Downloaded: 2016-12-30T10:45Z
Check the source to verify that this is the current version before use.

Shell size	N dia max	M dia max	AF max	AG max	O dia max	Insert figure See note 5	Color band EIA RS359
11	.960 (24.38)	1.050 (26.67)	4.190 (106.43)	4.250 (107.95)	1.028 (26.11)	1	Yellow
13	1.085 (27.55)	1.050 (26.67)	4.190 (106.43)	4.250 (107.95)	1.141 (28.98)	2	Yellow
15	1.255 (31.88)	1.550 (39.37)	4.440 (112.78)	4.500 (114.30)	1.263 (32.08)	3	Yellow

NOTES:
1. Dimensions are in inches.
2. Metric equivalents are given for general information only.
3. Dimensions apply after plating.
4. Metric equivalents (mm) are in parentheses.
5. For insert arrangement, see the indicated figure in MIL-STD-2163.

FIGURE 1. Plug connector with 90° backshell strain relief - Continued.

REQUIREMENTS:

Temperature: Range 1 (-54°C to +65°C operating, -62°C to +71°C storage).

Dimensions and configurations: See figure 1 herein and MIL-C-28876, figures 4 and 9.

Weight:

Shell size	Weight (ounces), maximum
11	9.5
13	11.5
15	14.5

Fiber optic cable:

Cable diameter: 0.315 inch (8.00 mm) or 0.423 inch (10.75 mm) ± 10 percent.

Fiber type: MIL-F-49291/3, MIL-F-49291/4, MIL-F-49291/6, and MIL-F-49291/7.

Insert arrangement: See MIL-STD-2163 for desired shell size.

Termini: Style P (pin) or S (socket). See MIL-T-29504/1, MIL-T-29504/2, MIL-T-29504/12, MIL-T-29504/13, MIL-T-29504/14, and MIL-T-29504/15 (for dummy terminus, see MIL-T-29504/3).

Cleaning procedures: Dampen lens tissue (paper wipe or cotton swab) with a small amount of isopropyl alcohol (minimum 90 percent strength). Gently wipe the face of the connector, removing any debris, particularly around the optical fiber, using clean lint-free lens tissue (paper wipe or cotton swab). Carefully dry the contact with a clean, dry, lint-free tissue.

Shell polarization: 1 through 6 keyway positions. See MIL-C-28876, figure 6.

Source: https://assist.dla.mil -- Downloaded: 2016-12-30T10:45Z
Check the source to verify that this is the current version before use.

Marking:

PIN: Marked on coupling ring of plug (see table I).

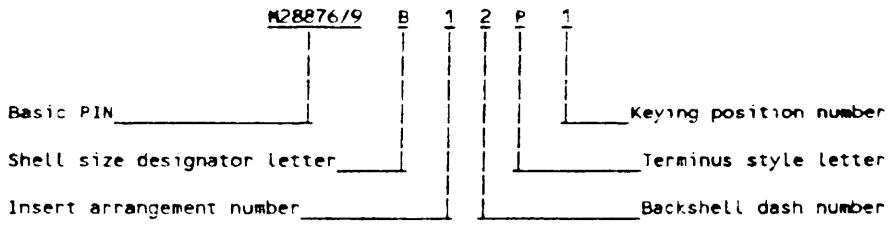

TABLE I. PIN designators.

Shell size	Designator	Insert arrangement number	Termini	Key position	Maximum cable outer diameter, backshell number		
					1	2	3
11	A	1	P or S	1, 2, 3, 4, 5, or 6	.250 (6.35)	.346 (8.80)	
13	B	1	P or S	1, 2, 3, 4, 5, or 6	.285 (7.24)	.346 (8.80)	
15	C	1 or 2	P or S	1, 2, 3, 4, 5, or 6	.515 (13.08)	.256 (6.50)	.375 (9.53)

Mating counterpart: Receptacle connectors specified in MIL-C-28876/1 through MIL-C-28876/5 and MIL-C-28876/11 through MIL-C-28876/14.

Installation and removal tools: As specified in MIL-I-81969/46 through MIL-I-81969/49, MIL-T-83523/5 and MIL-T-83523/8.

For qualified products listing, quality conformance, and periodic inspections, dummy termini shall be used in all unused cavities.

Patent notice: The Government does not have a royalty-free license under the following patents for the benefit of manufacturers of the item, either for the Government or for use in equipment to be delivered to the Government:

Patent application no.	Patent expiration date
4,493,529	1/15/2002

Revision letters are not used to denote changes due to the extensiveness of the changes.

Source: https://assist.dla.mil -- Downloaded: 2016-12-30T10:45Z
Check the source to verify that this is the current version before use.

CONCLUDING MATERIAL

Custodians:
Army - CR
Navy - SH
Air Force - 85
NASA - NA

Review activities:
Army - MI
Navy - AS, MC
Air Force - 17, 19, 80, 90, 99
DLA - ES

User activities:
Navy - OS, YD
Air Force - 13, 14

Preparing activity:
Navy - SH

Agent:
DLA - ES

(Project 6060-0093-9)

Source: https://assist.dla.mil -- Downloaded: 2016-12-30T10:45Z
Check the source to verify that this is the current version before use.