INCH-POUND

MIL-STD-129R
18 February 2014
SUPERSEDING
MIL-STD-129P
w/CHANGE 4
19 September 2007

DEPARTMENT OF DEFENSE
STANDARD PRACTICE

MILITARY MARKING
FOR SHIPMENT AND STORAGE

AMSC N/A **AREA PACK**

Source: https://assist.dla.mil -- Downloaded: 2016-10-21T11:13Z
Check the source to verify that this is the current version before use.

FOREWORD

1. This standard is approved for use by all Departments and Agencies of the Department of Defense.

2. This standard is to be cited only for military marking for shipment and storage.

3. This standard incorporates MIL-HDBK-129.

4. This revision has resulted in numerous changes to MIL-STD-129 Revision P, Change 4, but the most significant ones are:

a. If a single two-dimension (PDF417) bar code cannot accommodate all the information for the included item information, a set of Macro PDF417 bar codes encode the identification information and the UII information. See Appendix A.

b. A marking exception is provided for DoD originated shipments overpacked for convenience of handling.

c. Palletized unit loads are specifically called out for identification and bar code marking.

d. The military shipping label (MSL) format includes a transportation tracking number (TTN) as a conditional data element that is only included if the system can generate and encode it.

e. The 2D (PDF417) bar code is recommended for use in all packaging identification marking and some figures are modified to remove the linear (Code 39) bar codes.

f. Packing list requirements are defined to be one of two types: 1) a content packing list for package contents not marked on the packaging, to include sets, kits, and assemblies; 2) a shipment packing list for a single-piece or multi-piece shipment units to include applicable shipping information.

g. The 2D (PDF417) bar code content for unit pack and container marking was modified to include data qualifiers for the part number (DI ‘1P’) and for the quantity and unit of issue (DI ‘7Q’).

h. The ammunition and explosives section (see 5.14) is completely rewritten to include a new ammunition/explosive packaging label. Most of the existing paragraphs are revised; however, a large portion of the text is moved to different paragraphs and not changed.

i. The shipment term “customer direct” replaces “direct vendor delivery (DVD)” to align with DoD distribution definitions.

Source: https://assist.dla.mil -- Downloaded: 2016-10-21T11:13Z
Check the source to verify that this is the current version before use.

j. Many of the changes were required to align with DoD transitioning to life cycle management of serialized items through programs for item unique identification (IUID) and serialized item management (see Table III for term definitions). To further enable the IUID requirement, the unique identification marking in this standard is changed to include the following:

(1) The end-item/product serialized numbers marked on each unit pack, container, or palletized unit load include all of the unique item identifiers (UII) and assigned serial numbers. Exceptions apply for more than five serial numbers and for assorted-item packs.

(2) ISO/IEC 15434 Format 06 envelopes are used to associate line item specific data (e.g. document number, NSN, quantity, serial number, UII, etc.). The Format 06 envelopes may be used for military shipping label data associations and the Format 06 envelopes are used for serialized item number associations.

(3) For other than assorted item packs, serial number lists and UII number lists are required for the end-item/product NSN if more than five serialized items are included in the package.

5. Comments, suggestions, or questions on this document should be addressed to Chief, Logistics Support Activity, Packaging, Storage, and Containerization Center, ATTN: AMXLS-AT-P, 11 Hap Arnold Boulevard, Tobyhanna, PA 18466-5097 or e-mailed to toby.pt@us.army.mil. Since contact information can change, you may want to verify the currency of this address information using the ASSIST Online database at https://assist.dla.mil.

Source: https://assist.dla.mil -- Downloaded: 2016-10-21T11:13Z
Check the source to verify that this is the current version before use.

THIS PAGE IS INTENTIONALLY LEFT BLANK

Source: https://assist.dla.mil -- Downloaded: 2016-10-21T11:13Z
Check the source to verify that this is the current version before use.

CONTENTS

PARAGRAPH **PAGE**

FOREWORD ..... **ii**

1. SCOPE **1**

1.1 Purpose **1**

1.2 Applicability **1**

2. APPLICABLE DOCUMENTS **1**

2.1 General **1**

2.2 Government documents **1**

2.2.1 Specifications, standards, and handbooks 1

2.2.2 Other Government documents and publications 2

2.3 Non-Government publications **4**

2.4 Order of precedence **6**

3. DEFINITIONS **6**

3.1 Abbreviations and acronyms **6**

3.2 Term definitions **11**

4. GENERAL REQUIREMENTS **20**

4.1 Marking unit packs, intermediate and exterior containers, unit loads, palletized unit loads, and loose or unpacked items **20**

4.2 Marking, marking materials, and methods **20**

4.2.1 Marking materials 20

4.2.1.1 Waterproofing materials used as protective coatings 20

4.2.1.2 Stencil-marking material 21

4.2.1.3 Obliterating lacquer, enamel, or paint 21

4.2.1.4 Lithographing, embossing, roller coating, stamping, and inkjet marking 21

4.2.2 Labels, pressure-sensitive, water-resistant 21

4.2.2.1 Use of labels 21

4.2.2.2 Protective coating of labels 21

4.2.2.3 Affixing and securing labels (except for labels on vehicles and related equipment) 21

4.2.3 Shipping tags 22

4.2.4 Water-resistant envelopes 22

4.2.5 Conditions of surfaces to be marked 22

4.2.6 Marking legibility, durability, and color 22

4.2.7 Marking board or marking panel 22

4.2.8 Size of marking 22

5. DETAILED REQUIREMENTS **22**

5.1 Identification text marking (for ammo/explosives – see 5.14) **22**

Source: https://assist.dla.mil -- Downloaded: 2016-10-21T11:13Z
Check the source to verify that this is the current version before use.

CONTENTS

PARAGRAPH **PAGE**

5.1.1 Identification text marking on unit packs and intermediate containers 24
5.1.2 Identification text marking on exterior containers, palletized unit loads, and unpacked items 25
5.1.2.1 Package marking for assorted-items pack 27
5.2 Address marking (shipping labels) 28
5.2.1 Military (DoD) and contractor- or vendor-originated address marking 28
5.2.2 Military shipping label (MSL) 28
5.2.2.1 MSL size 30
5.2.2.2 MSL label stock quality 30
5.2.2.3 MSL format 30
5.2.2.4 Completing the MSL for address marking 30
5.2.2.5 Data content of the MSL 31
5.2.2.6 MSL 2D (PDF417) bar code requirements 34
5.2.2.7 MSL bar code printing standards 35
5.2.2.8 Human-readable interpretation 36
5.2.3 DoD shipments sent through the U.S. Postal Service and commercial parcel services 36
5.3 Placement of identification text (for ammo/explosives – see 5.14) and address marking. 36
5.3.1 Placement of identification text marking on unit packs and intermediate containers 36
5.3.2 Placement of identification text and address marking on exterior shipping containers, palletized unit loads, and unpacked items 37
5.3.2.1 Boxes and crates. 37
5.3.2.2 Bales and cloth-covered bundles 38
5.3.2.3 Paper shipping sacks, bags, and textile/laminated textile bags 39
5.3.2.4 Barrels, drums, and other cylindrical containers (including empty containers) 40
5.3.2.5 Miscellaneous articles and unpacked items such as spools, reels, rods, coils of wire and cable, and paper- and cloth-wrapped rolls 40
5.3.2.6 Unpacked major equipment (except unpacked vehicles) 41
5.3.2.7 Palletized unit load 42
5.3.2.8 Wood products 44
5.3.2.8.1 Bundled wood products 44
5.3.2.8.2 Unstrapped (loose) wood products (piles, poles, etc.) 44
5.3.2.8.3 Miscellaneous wood products in containers (doors, windows, and moldings) 45
5.3.2.9 Unpacked vehicles 45
5.3.2.10 Commercial-owned or Government-owned (or leased) shipping containers (SEAVAN) 46

Source: https://assist.dla.mil -- Downloaded: 2016-10-21T11:13Z
Check the source to verify that this is the current version before use.

CONTENTS

PARAGRAPH **PAGE**

5.3.2.11 Full rail carload and full truckload shipments....47
5.3.2.12 Less than rail carload and less than truckload (LTL) shipments....47
5.3.2.13 Tires (loose)....47
5.3.2.14 Tubular products (loose)....47
5.3.2.15 Tubular products (bundles and lifts)....47
5.4 Identification bar code marking....48
5.4.1 Bar code data content specifications (non-ammunition)....48
5.4.1.1 Identification bar code content for unit packs and intermediate containers....48
5.4.1.1.1 Identification 2D (PDF417) and linear (Code 39) bar code encoded serial numbers on unit packs and intermediate containers....49
5.4.1.1.2 Identification 2D (PDF417) bar code encoded unique item identifiers (UII) on unit packs and intermediate containers....49
5.4.1.2 Identification bar code content for exterior containers, palletized unit loads, and unpacked items....50
5.4.1.2.1 Identification 2D (PDF417) and linear (Code 39) bar code encoded serial numbers on unpacked items, exterior shipping containers, and palletized unit loads....51
5.4.1.2.2 Identification 2D (PDF417) bar code encoded unique item identifiers (UII) on unpacked items, exterior shipping containers, and palletized unit loads....52
5.4.1.3 Assorted-items pack....52
5.4.1.4 Sets, kits, and outfits (SKO)....53
5.4.1.5 Materiel destined for resale....53
5.4.1.6 Protected cargo (controlled, sensitive, classified, and pilferable items)....53
5.4.2 Identification bar code labels / printing....53
5.4.2.1 Label stock requirements....53
5.4.2.2 Linear (Code 39) bar code printing specifications....54
5.4.2.3 Two-dimensional (2D) (PDF417) bar code printing specifications....54
5.4.2.4 Identification linear (Code 39)) marking basic configurations....54
5.4.2.5 Identification linear (Code 39) bar code complex configurations....54
5.4.2.6 Identification linear (Code 39) bar code configuration information....54
5.4.3 General application requirements for identification bar codes and labels....56
5.4.3.1 Applying identification bar codes on containers/surfaces (other than wood)....56
5.4.3.2 Applying identification bar code labels on wood containers/surfaces....56
5.4.3.3 Identification 2D (PDF417) and linear (Code 39) bar code marking on transparent containers....56
5.4.4 Placement of identification 2D (PDF417) and linear (Code 39) bar code marking on unit packs and intermediate containers....56

Source: https://assist.dla.mil -- Downloaded: 2016-10-21T11:13Z
Check the source to verify that this is the current version before use.

CONTENTS

PARAGRAPH **PAGE**

5.4.5 Placement of identification 2D (PDF417) and linear (Code 39) bar code marking on exterior shipping containers, palletized unit loads, and unpacked items 58
5.4.5.2 Tag marking configurations for linear (Code 39) identification bar codes to be used with exterior shipping containers, palletized unit loads, and unpacked items 59
5.4.5.3 2D (PDF417) bar code configuration. 59
5.4.5.4 Label protection for exterior shipping containers, palletized unit loads, or unpacked items. 60
5.4.5.5 Boxes and crates under 10 cubic feet and those 10 cubic feet and over 60
5.4.5.6 Bales, cloth-covered bundles, paper shipping sacks, bags and textile/laminated textile bags, rods, shafts, pipes, and coils of wire 61
5.4.5.7 Barrels, drums, and other cylindrical containers 62
5.4.5.8 Reels or spools of cable, wire, and rope 63
5.4.5.9 Paper- and cloth-wrapped rolls 63
5.4.5.10 Palletized unit loads 63
5.4.5.11 Unpacked major equipment (skidded or unskidded) 64
5.4.5.12 Bundled wood products 64
5.4.5.13 Small arms weapons container and palletized unit load labels 64

5.5 Customer direct (formerly direct vendor delivery (DVD)) 64

5.6 Foreign Military Sales (FMS) marking requirements 65
5.6.1 Minimum package size 65
5.6.2 FMS assorted-items pack 65
5.6.3 Contractor-originated FMS shipments 65
5.6.4 DoD originated FMS shipments 66

5.7 Shipments to NATO countries or shipments using NATO carriers 66

5.8 Marking for specific commodities 66
5.8.1 Household goods 67
5.8.2 Medical material 67
5.8.3 Subsistence 67
5.8.4 Bulk cargo 67
5.8.5 Petroleum products 67

5.9 Passive radio frequency identification (RFID) 67
5.9.1 Passive RFID tag technical requirements 67
5.9.1.1 Passive RFID tag data specifications 67
5.9.1.2 Passive RFID tag frequency 67
5.9.2 Passive RFID tag placement 67
5.9.2.1 Individual shipping container or palletized unit load 68
5.9.2.2 Exterior containers within a palletized unit load 69
5.9.3 Tagging munitions/explosives with passive RFID 69

Source: https://assist.dla.mil -- Downloaded: 2016-10-21T11:13Z
Check the source to verify that this is the current version before use.

CONTENTS

PARAGRAPH **PAGE**

5.9.4 Electronic data interchange (EDI) transactions 69

5.10 Special marks and labels 69
5.10.1 Shelf-life marking 69
5.10.2 Project code marking 71
5.10.3 Transportation special handling/protective services 72
5.10.4 Structural marking 72
5.10.5 Valuable and security items 72
5.10.6 Special handling, including arrows and FRAGILE or DELICATE marking 72
5.10.6.1 Legend "USE NO HOOKS" 72
5.10.6.2 Arrows 73
5.10.7 Warranty marking 73
5.10.8 Pictorial symbols for marking 73
5.10.9 Lag bolt caution marking 74
5.10.10 Method 50 74
5.10.11 Magnetized material 75
5.10.12 Engineering or technical order changes or modifications 75
5.10.13 Lot, batch, or identification control numbers 75
5.10.14 Set or assembly marking 76
5.10.14.1 Set or assembly marking for component parts of disassembled end-items/products 76
5.10.14.2 Single stock-numbered and part-numbered sets 77
5.10.14.3 Single stock-numbered and part-numbered sets with different stock-numbered parts 77
5.10.15 Consolidation containers 78
5.10.16 Expedited handling - not mission capable supply (NMCS) and 999 78
5.10.17 Center of balance and lifting and tiedown points 79
5.10.18 Load bearing areas and forklift entry points 80
5.10.19 Axle weight marking 80
5.10.20.1 ESD unit packs 80
5.10.20.2 ESD intermediate and exterior containers 81
5.10.21 Materiel condition marking 81
5.10.22 Hardness critical item (HCI) 82

5.11 Packing lists and documentation 82
5.11.1 Content packing lists for container/palletized load/unpacked items 82
5.11.2 Shipment packing list and DD Form 1384 (TCMD) 83
5.11.2.1 Shipment units containing a single DD Form 1348-1A 84
5.11.2.2 Shipment unit containing multiple DD Forms 1348-1A 84
5.11.2.3 Alternate method of attaching DD Forms 1348-1A to fiberboard boxes 85
5.11.2.4 Method of attaching accompanying documentation for shipments of vehicles 85

Source: https://assist.dla.mil -- Downloaded: 2016-10-21T11:13Z
Check the source to verify that this is the current version before use.

CONTENTS

PARAGRAPH **PAGE**

5.11.3 Exceptions to the use of exterior container documentation 85

5.12 DD Form 1348-1A bar code data requirements 86
5.12.1 DD Form 1348-1A linear (Code 39) bar codes 86
5.12.2 DD Form 1348-1A 2D (PDF417) bar code 87

5.13 Hazardous materials (HAZMAT) 88
5.13.1 HAZMAT marking and labeling requirements 88
5.13.2 Proper shipping name and identification number 88
5.13.3 Marking and labeling of an assorted-items pack containing HAZMAT 89
5.13.4 Marking and labeling of air and water shipments 90
5.13.5 Identifying containers and packagings 90
5.13.5.1 DOT specification and UN Performance-Oriented Packaging certification marking 90
5.13.5.2 Specialized containers 90
5.13.5.3 DOT special permits (SPs) 92
5.13.5.4 Certification of equivalency (COE) 92
5.13.5.5 Competent authority approval (CAA) 92
5.13.5.6 Overpacked and assorted-items pack containers of HAZMAT 92
5.13.6 Documentation for HAZMAT 92
5.13.6.1 Existing palletized unit loads of HAZMAT 92
5.13.7 Flash point marking 93
5.13.8 Specific hazards 93
5.13.8.1 Asbestos 93
5.13.8.2 Polychlorinated biphenyls (PCB) 93
5.13.9 Hazardous chemical warning label 93
5.13.10 Kits containing HAZMAT 94
5.13.11 Radioactive material marking and labeling requirements 94
5.13.11.1 Nuclear Regulatory Commission (NRC) interior/storage container label 94
5.13.11.2 Radioactive materials requiring an NRC label 95
5.13.11.3 Transportation of radioactive materials 95
5.13.11.4 Exceptions to the use of radioactive material labels 95

5.14 Ammunition and explosives 96
5.14.1 Identification marking on unit packs, intermediate containers, and unpacked items 96
5.14.2 Identification marking on unpacked items (not in a unit load) and exterior containers 97
5.14.3 Identification marking on empty containers 99
5.14.4 Identification marking on unit loads, to include palletized unit loads 100
5.14.4.1 Content of unit load identification marking. 101
5.14.4.2 Application of unit load identification marking. 101
5.14.5 Ammunition/Explosives Packaging Label marking requirements 104

Source: https://assist.dla.mil -- Downloaded: 2016-10-21T11:13Z
Check the source to verify that this is the current version before use.

CONTENTS

PARAGRAPH **PAGE**

5.14.5.1 Label specifications 104
5.14.6 Ammunition/Explosives Packaging Label 2D (PDF417) bar code data set 106
5.14.6.1 Ammunition/Explosives Packaging Label bar code data structure 106
5.14.6.2 Identification bar code human-readable information 109
5.14.6.3 Use of multiple Ammunition/Explosives Packaging Labels for large data requirements 109
5.14.6.4 Location and application of the Ammunition/Explosives Packaging Label 110
5.14.7 Address marking 111
5.14.8 Order of precedence 111

6. NOTES 111
6.1 Intended use 111
6.2 Subject term (key word) listing 111
6.3 International standardization agreement implementation 112
6.4 Sizes of forms used 112
6.5 Unit pack desiccant label 112
6.6 Chemical agent resistant coatings (CARC) 112
6.7 Changes from previous issue 112

APPENDIX A TECHNICAL DETAILS FOR 2D (PDF417) BAR CODE

A.1. SCOPE 114
A.1.1 Scope 114
A.2. PROCEDURE 114
A.2.1 Printing instructions 114
A.2.2 Table A-I information 116
A.2.3 Tables A-II through A-V information 117
A.2.4 Data syntax graphic 118
A.2.5 Encoding serial numbers 119
A.2.5.1 Syntax business rules for encoding linked serial numbers and UIIs 119
A.2.5.2 Data syntax example 120
A.2.6 Table A-V Ammunition/Explosives Packaging Label specifications 120

Source: https://assist.dla.mil -- Downloaded: 2016-10-21T11:13Z
Check the source to verify that this is the current version before use.

CONTENTS

FIGURES **PAGE**

1. Example of unit pack, intermediate and exterior container identification text marking and 2D (PDF417) bar codes. 23
2A. Generic MSL. 29
2B. Unit move MSL. 29
3. Placement of identification and address marking on boxes and crates. 38
4. Placement of identification and address marking on bales and cloth-covered bundles. 39
5. Placement of identification and address marking on sacks and bags. 39
6. Placement of identification and address marking on barrels, drums, and other cylindrical containers. 40
7. Placement of identification and address marking on miscellaneous articles and unpacked items. 41
8. Placement of identification and address marking on unpacked major equipment. 42
9. Placement of identification and address marking on palletized unit loads. 43
10. Placement of identification and address marking on bundled wood products. 44
11. Placement of identification and address marking on unstrapped (loose) wood products. 45
12. Placement of identification and address marking on miscellaneous wood products in containers. 45
13. Placement of identification and address marking on a marking board for an unpacked vehicle. 46
14. Placement of address marking (MSL on a SEAVAN). 47
15. Examples of typical linear (Code 39) bar code fields. 50
16A. Linear (Code 39) bar code configurations. 55
16B. Complex linear (Code 39) bar code configurations. 55
17. Bar code marking on unit packs. 57
18. Bar code marking on unit and intermediate containers. 57
19. Typical linear (Code 39) bar code configurations for use on exterior containers and on tags. 58
20. Macro PDF417 bar codes on exterior container label. 59
21. Exterior container bar code marking on boxes and crates under 10 cubic feet. 60
22. Exterior container bar code marking on boxes and crates 10 cubic feet and over. 61
23. Bar code tagged materiel. 62

Source: https://assist.dla.mil -- Downloaded: 2016-10-21T11:13Z
Check the source to verify that this is the current version before use.

CONTENTS

FIGURES **PAGE**

24. Bar code marking on cylindrical containers. 62
25. Bar code marking on miscellaneous materiel. 64
26. Distribution of the DD Form 1348-1A for FMS shipments. 66
27. DD Form 2477-1, Extended Shelf Life. 70
28. Examples of special marking (shelf life, project code, and transportation special handling/protective services marking). 71
29. Examples of special marking (FRAGILE, UP, arrows, USE NO HOOKS and warranty marking). 73
30. Examples of pictorial symbols. 74
31. Method 50 marking. 75
32. Examples of special marking (modification work order (MWO)) and lot number marking on unit packs and intermediate and exterior containers). 76
33. Examples of special marking (set or assembly marking, with component parts of disassembled items and single stock-numbered set marking). 77
34. Single stock numbered item consisting of other stock numbered items in a single container. 78
35. Examples of expedited handling labels. 78
36. Center of balance, load bearing area, and lifting and tiedown points. 79
37. ESD sensitive devices attention symbols and labels. 80
38. Packing list application. 83
39. Sample of a DD Form 1348-1A, Issue Release/Receipt Document (IRRD). 85
40. Sample of a DD Form 1348-1A, Issue Release/Receipt Document (IRRD), Continuation Page (page 1 of 3 and not actual size). 88
41. Example of exterior container HAZMAT marking and labeling requirements. 89
42. Example of UN Performance-Oriented Packaging certification marking for a fiberboard box. 91
43. Flash point marking. 93
44. Asbestos and PCB HAZMAT labels. 94
45. NRC interior/storage container label. 95
46. Identification marking and the placement of ammo/explosives identification bar code labels on exterior rectangular containers. 98
47. Identification marking and the placement of ammo/explosives identification bar code labels for exterior cylindrical containers. 98
48. Examples of ammo/explosives unit load identification and identification bar code marking. 100

Source: https://assist.dla.mil -- Downloaded: 2016-10-21T11:13Z
Check the source to verify that this is the current version before use.

CONTENTS

FIGURES **PAGE**

49. Ammunition/Explosives Packaging Label. 105
50. Data nesting structure. 106
51. Examples of multiple Ammunition/Explosives Packaging Labels. 110
A-1. 2D (PDF417) data columns. 114
A-2. 2D (PDF417) data syntax. 119

TABLES **PAGE**

I. UI/UM terms and abbreviations. 7
II. Other abbreviations and acronyms. 7
III. Term definitions. 11
IV. Shelf-life codes. 113
A-I. 2D (PDF417) bar code data descriptions (Format 06). 133
A-I. 2D (PDF417) bar code data descriptions (Format 07). 135
A-II. MSL (generic) 2D (PDF417) bar code format. 139
A-III. MSL (unit move) 2D (PDF417) bar code format. 143
A-IV. Unit pack and container identification 2D (PDF417) bar code format. 146
A-V. Ammunition/Explosives Packaging Label. 148

CONCLUDING MATERIAL 151

Source: https://assist.dla.mil -- Downloaded: 2016-10-21T11:13Z
Check the source to verify that this is the current version before use.

1. SCOPE

1.1 Purpose. This standard provides the minimum requirements for uniform military marking for shipment and storage. Additional marking may be required by the contract or the cognizant activity.

1.2 Applicability. Shipment planning for supplies, equipment, and ammunition will be as specified in this standard. A marking is the numbers, letters, bar codes, labels, tags, symbols, or colors applied to provide identification and to expedite handling during shipment and storage.

2. APPLICABLE DOCUMENTS

2.1 General. The documents listed in this section are specified in sections 3, 4, and 5 of this standard. This section does not include documents cited in other sections of this standard or recommended for additional information or as examples. While every effort has been made to ensure the completeness of this list, document users are cautioned that they meet all specified requirements documents cited in sections 3, 4, and 5 of this standard, whether or not they are listed.

2.2 Government documents.

2.2.1 Specifications, standards, and handbooks. The following specifications, standards, and handbooks form a part of this document to the extent specified herein. Unless otherwise specified, the issues of these documents are those cited in the solicitation or contract.

INTERNATIONAL STANDARDIZATION AGREEMENTS

STANAG 4281 - NATO Standard Marking for Shipment and Storage
STANAG 4329 - NATO Standard Bar Code Symbology

(Copies of Standardization Agreements (STANAGs) are available at http://nsa.nato.int/nsa/ or from the NATO Standardization Agency (NSA), North Atlantic Treaty Organization HQ, Boulevard Leopold III B-1110, Brussels, Belgium.)

FEDERAL STANDARDS

FED-STD-595/33446 - Yellow, Flat or Lusterless
FED-STD-595/34094 - Green, Flat or Lusterless

Source: https://assist.dla.mil -- Downloaded: 2016-10-21T11:13Z
Check the source to verify that this is the current version before use.

DEPARTMENT OF DEFENSE SPECIFICATIONS

MIL-DTL-4	-	Tires and Inner Tubes (Non-Aircraft); Packaging of
MIL-DTL-53039	-	Coating, Aliphatic Polyurethane, Single Component, Chemical Agent Resistant
MIL-PRF-61002	-	Pressure-Sensitive Adhesive Labels for Bar Coding
MIL-DTL-64159	-	Coating, Water Dispersible Aliphatic Polyurethane, Chemical Agent Resistant

DEPARTMENT OF DEFENSE STANDARDS

MIL-STD-130	-	Standard Practice for Identification Marking of U.S. Military Property
MIL-STD-290	-	Standard Practice, Packaging and Marking of Petroleum and Related Products
MIL-STD-2073-1	-	Standard Practice for Military Packaging

(Copies of these documents are available online at https://assist.dla.mil or http://quicksearch.dla.mil/.)

2.2.2 Other Government documents and publications. The following other Government documents and publications form a part of this document to the extent specified herein. Unless otherwise specified, issues are those cited in the solicitation.

CODE OF FEDERAL REGULATIONS (CFR)

Title 10 CFR	-	Energy
Title 29 CFR	-	Labor
Title 40 CFR	-	Protection of Environment
Title 49 CFR	-	Transportation

FEDERAL ACQUISITION REGULATION (FAR)

DEFENSE FEDERAL ACQUISITION REGULATION SUPPLEMENT (DFARS)

(The CFR titles are available for download from http://www.ecfr.gov/. The FAR and DFARS are available for download at http://farsite.hill.af.mil/. The U.S. Government Printing Office web site is also available at http://www.gpo.gov/ for access to the documents.)

Source: https://assist.dla.mil -- Downloaded: 2016-10-21T11:13Z
Check the source to verify that this is the current version before use.

JOINT MILITARY

AFMAN 24-204 (INTERSERVICE)/ TM 38-250/ NAVSUP PUB 505/ MCO P4030.19J/ DLAI 4145.3	-	Preparing Hazardous Materials for Military Air Shipments
DLAD 4145.41/ AR 700-143/ SECNAVINST 4030.55/ AFJI 24-210 (I)/ MCO 4030.40	-	Packaging of Hazardous Material
TM 38-400/ NAVSUP PUB 572/ AFJMAN 23-210/ MCO 4450.14/ DLAM 4145.12	-	Storage and Materials Handling
DTR 4500.9-R	-	Defense Transportation Regulation (DTR)

DoD REGULATIONS, MANUALS, AND HANDBOOKS

DoD 4100.39-M	-	Federal Logistics Information System (FLIS) Procedures Manual
DoD 4140.27-M	-	Shelf-Life Management Manual

DEFENSE LOGISTICS MANAGEMENT SYSTEM (DLMS)

DLM 4000.25-1	-	Military Standard Requisitioning and Issue Procedures (MILSTRIP)

(Joint military publications, DoD manuals, and DLMS manuals listed are available through the applicable Service/Agency publications distribution office. Non-DoD activities can obtain copies of the publications from the Defense Logistics Agency, ATTN: DSS-CV, 8725 John J. Kingman Road, Fort Belvoir, VA 22060-6221. DLM 4000.25-1 and DoD 4140.27-M are available electronically through http://www2.dla.mil/j-6/dlmso/elibrary/manuals/publications.asp. DTR 4500.9-R is available through http://www.transcom.mil/dtr/dtrHome/.)

Source: https://assist.dla.mil -- Downloaded: 2016-10-21T11:13Z
Check the source to verify that this is the current version before use.

RADIO FREQUENCY IDENTIFICATION (RFID) AND UNIQUE ITEM IDENTIFIER (UII) DOCUMENTS

DoD Suppliers' Passive RFID Information Guide

DoD Guide to Uniquely Identifying Items

(Copies of the RFID Information Guide are available at http://www.acq.osd.mil/log/sci/ait.html. The DoD Guide to Uniquely Identifying Items is available at http://dodprocurementtoolbox.com/site/uidtools/.)

OTHER

Medical Marking Standard No. 1

DLA Troop Support Form 3556-Marking Instructions for Boxes, Sacks, and Unit Loads of Perishable and Semiperishable Subsistence

(Copies of Medical Marking Standard No. 1 (MMS No. 1) may be obtained by contacting DLA Troop Support via email at dscp.packaging@dla.mil or online at http://www.landandmaritime.dla.mil/downloads/packaging/mms1.pdf. Copies of DLA Troop Support Form 3556 are available online at https://www.troopsupport.dla.mil/subs/support/specs/forms/3556.pdf or from the Specification POC by calling 215-737-7772.)

2.3 Non-Government publications. The following documents form a part of this document to the extent specified herein. Unless otherwise specified, the issues of documents are those cited in the solicitation or contract.

ASTM INTERNATIONAL

ASTM D882	-	Standard Test Method for Tensile Properties of Thin Plastic Sheeting
ASTM D996	-	Standard Terminology of Packaging and Distribution Environments
ASTM D2582	-	Standard Test Method for Puncture-Propagation Tear Resistance of Plastic Film and Thin Sheeting
ASTM D3951	-	Standard Practice for Commercial Packaging
ASTM D3953	-	Standard Specification for Strapping, Flat Steel and Seals
ASTM D4675	-	Standard Guide for Selection and Use of Flat Strapping Materials
ASTM D5445	-	Standard Practice for Pictorial Markings for Handling of Goods

Source: https://assist.dla.mil -- Downloaded: 2016-10-21T11:13Z
Check the source to verify that this is the current version before use.

ASTM INTERNATIONAL - Continued

ASTM D5486/ D5486M	-	Standard Specification for Pressure Sensitive Tape for Packaging, Box Closure, and Sealing

(Copies are available online at http://www.astm.org/Standard/ or from ASTM International, 100 Barr Harbor Drive, West Conshohocken, PA 19428-2959.)

ACCREDITED STANDARDS COMMITTEE (ASC)
AMERICAN NATIONAL STANDARDS INSTITUTE (ANSI)
INTERNATIONAL ORGANIZATION STANDARDS (ISO)
INTERNATIONAL ELECTROTECHNICAL COMMITTEE (IEC)

ANSI ASC X12.3	-	Data Element Dictionary
ANSI MH10.8.1	-	Linear Bar Code and Two-Dimensional Symbols Used in Shipping, Receiving, and Transport Applications
ANSI MH10.8.2	-	Data Identifier and Application Identifier Standard
ANSI MH10.8.6	-	Bar Codes and Two-Dimensional (2D) Symbols for Product Packaging
ISO/IEC 15415	-	Information technology – Automatic identification and data capture techniques – Bar code print quality test specification – Two-dimensional symbols
ISO/IEC 15416	-	Information technology – Automatic identification and data capture techniques – Bar code print quality test specification – Linear symbols
ISO/IEC 15434	-	Information technology – Automatic identification and data capture techniques – Syntax for high-capacity ADC media
ISO/IEC 15438	-	Information technology – Automatic identification and data capture techniques – Bar code symbology specification – PDF417
ISO/IEC 16388	-	Information technology – Automatic identification and data capture techniques – Bar code symbology specification – Code 39

(Copies of ASC, ANSI, or ISO/IEC documents are available at http://www.iso.org or http://www.ansi.org or from the American National Standards Institute, 25 West 43rd Street, 4th Floor, New York, NY 10036, and at http://www.mhi.org/ or from the Material Handling Industry, 8720 Red Oak Boulevard, Suite 201, Charlotte, NC 28217-3992.)

Source: https://assist.dla.mil -- Downloaded: 2016-10-21T11:13Z
Check the source to verify that this is the current version before use.

INTERNATIONAL AIR TRANSPORT ASSOCIATION (IATA)

Dangerous Goods Regulations

(Application for hard copies should be addressed to International Transport Association, 2000 Peel Street, Montreal, Quebec, Canada H3A 2R4.)

INTERNATIONAL CIVIL AVIATION ORGANIZATION (ICAO)

Technical Instructions for the Safe Transportation of Dangerous Goods by Air

(Application for copies should be addressed to International Regulations Publishing and Distributing Organization, P.O. Box 60105, Chicago, IL 60660.)

INTERNATIONAL MARITIME ORGANIZATION (IMO)

International Maritime Dangerous Goods (IMDG) Code

(Application for copies should be addressed to International Maritime Organization, 4 Albert Embankment, London SE1 7SR, England.)

2.4 Order of precedence. Unless otherwise noted herein or in the contract, in the event of a conflict between the text of this document and the references cited herein, the text of this document takes precedence. Nothing in this document, however, supersedes applicable laws and regulations unless a specific exemption has been obtained.

3. DEFINITIONS

General packaging definitions may be found in ASTM D996 and other referenced documents. Hazardous materials definitions are listed in Title 49 CFR, Parts 171 and 173, and in other related publications.

3.1 Abbreviations and acronyms. The following abbreviations and acronyms are used in this standard or are commonly associated with marking. Bar code abbreviations will be in accordance with the standards or documents cited for use.

a. Unit of issue (UI) or unit of measure (UM) abbreviations. Table I contains the recommended abbreviations for the human-readable translations of three different code sets used to describe the "quantity or basis for measurement" characteristic for an item. The three code sets (DLMS UI, DLMS UM, or ANSI ASC X12.3 Unit or Basis for Measurement) do not always use the same code for the same measured characteristic; therefore, the code must first be translated to the human-readable term which may then be printed using a Table I abbreviation. An abbreviation for package marking identified in a contract or purchase order takes precedence over the Table I list. Some of the abbreviations in Table I are for terms in addition to those listed in DoD 4100.39-M, Volume 10, Table 53 (UI) and Table 81 (UM) and in ANSI ASC

Source: https://assist.dla.mil -- Downloaded: 2016-10-21T11:13Z
Check the source to verify that this is the current version before use.

X12.3 Data Element 355 (Unit or Basis for Measurement). In this standard, also see the Table III UI and UM definitions for DLMS conversion guide information.

TABLE I. UI/UM terms and abbreviations.

Terms	Abbr	Terms	Abbr	Terms	Abbr
Ampoule	AM	Cylinder	CY	Pair	PR
Assembly	AY	Dozen	DZ	Piece	PC
Bag	BG	Drum	DR	Pint	PT
Bale	BE	Each	EA	Plate	PM
Ball	BA	Envelopes	EV	Pound	LB
Bar	BR	Foot	FT	Quart	QT
Barrel	BL	Gallon	GL	Ration	RA
Board foot	BF	Gross	GR	Ream	RM
Bolt	BO	Group	GP	Reel	RL
Book	BK	Hank	HK	Roll	RO
Bottle	BT	Hundred	HD	Set	SE
Box	BX	Inch	IN	Sheet	SH
Bundle	BD	Jar	JR	Shot	SO
Bushel	BU	Jug	JG	Skein	SK
Cake	CK	Keg	KE	Skid	SD
Can	CN	Kilogram	KG	Spool	SL
Carboy	CB	Kit	KT	Square foot	SF
Carton	CT	Length	LG	Square yard	SY
Cartridge	CA	Liter	LI	Stick	SX
Case	CS	Meal	ME	Strip	SP
Centimeter	CM	Meter	MR	Thousand	MX
Coil	CL	Millimeter	MM	Ton	TN
Cone	CE	Ounce	OZ	Troy ounce	TO
Container	CO	Outfit	OT	Tube	TU
Cubic centimeter	CC	Package	PG	Unit	UN
Cubic foot	CF	Packet	PZ	Vial	VI
Cubic inch	CI	Pad	PD	Yard	YD
Cubic yard	CD	Pail	PL		

b. Other abbreviations and acronyms. See Table II.

TABLE II. Other abbreviations and acronyms.

2D	-	Two-dimensional
ADC	-	Automatic Data Capture
ADC	-	Approved DLMS Change
AFJI	-	Air Force Joint Instruction
AFMAN	-	Air Force Manual
AIT	-	Automatic Identification Technology
AR	-	Army Regulation
ARS	-	Agricultural Research Service
ANSI	-	American National Standards Institute

Source: https://assist.dla.mil -- Downloaded: 2016-10-21T11:13Z
Check the source to verify that this is the current version before use.

TABLE II. Other abbreviations and acronyms – Continued.

ASC	-	Accredited Standards Committee
ASCII	-	American Standard Code for Information Interchange
ASTM	-	ASTM International
Bq	-	Becquerel
C	-	Celsius
C&T	-	Clothing and Textiles
CAA	-	Competent Authority Approval
CAGE	-	Commercial and Government Entity
Cal	-	Caliber
CARC	-	Chemical Agent Resistant Coating
CASKO	-	Component, Assembly, Set, Kit, or Outfit
CCP	-	Consolidation and Containerization Point
CDIST	-	Consignee Distribution Code
CD-ROM	-	Compact Disk-Read Only Memory
CFR	-	Code of Federal Regulations
CLIN	-	Contract Line Item Number
COC	-	Certificate of Conformance
COE	-	Certification of Equivalency
COND	-	Condition Code
CONUS	-	Continental United States
CPI	-	Characters per Inch
CU	-	Cube
DCMA	-	Defense Contract Management Agency
DD	-	Department of Defense
DEI	-	Data Element Identifier
DFARS	-	Defense Federal Acquisition Regulation Supplement
DI	-	Data Identifier
DIC	-	Document Identifier Code
DIST	-	Distribution Code
DLA	-	Defense Logistics Agency
DLAI	-	Defense Logistics Agency Instruction
DLAM	-	Defense Logistics Agency Manual
DLM	-	Defense Logistics Manual
DLMS	-	Defense Logistics Management System
DoD	-	Department of Defense
DODAAC	-	Department of Defense Activity Address Code
DODIC	-	Department of Defense Identification Code
DODISS	-	Department of Defense Index of Specifications and Standards
DOT	-	Department of Transportation
DOT-E	-	Department of Transportation-Exemption
DOT-SP	-	Department of Transportation Special Permit
DTR	-	Defense Transportation Regulation, DTR 4500.9-R
DTS	-	Defense Transportation System
DVD	-	Direct Vendor Delivery
E3	-	Electromagnetic Effects on the Environment

Source: https://assist.dla.mil -- Downloaded: 2016-10-21T11:13Z
Check the source to verify that this is the current version before use.

TABLE II. Other abbreviations and acronyms – Continued.

EDI	-	Electronic Data Interchange
ESD	-	Electrostatic Discharge
EXP	-	Expiration
F	-	Fahrenheit
FAR	-	Federal Acquisition Regulation
FDA	-	Food and Drug Administration
FED-STD	-	Federal Standard
FMS	-	Foreign Military Sales
FSC	-	Federal Supply Class
GBL	-	Government Bill of Lading
GSA	-	General Services Administration
HAZMAT	-	Hazardous Materials
HCI	-	Hardness Critical Item
HERO	-	Hazards of Electromagnetic Radiation to Ordnance
HHG	-	Household Goods
HMIS	-	Hazardous Materials Information System
IATA	-	International Air Transport Association
IAW	-	In Accordance With
ICAO	-	International Civil Aviation Organization
IEC	-	International Electrotechnical Committee
IMDG	-	International Maritime Dangerous Goods
IMO	-	International Maritime Organization
INSP	-	Inspection
IRRD	-	Issue Release/Receipt Document
ISO	-	International Organization for Standardization
IUID	-	Item Unique Identification
JHCS	-	Joint Hazard Classification System
kPa	-	Kilopascal
LTL	-	Less Than Truckload
MAPAC	-	Military Assistance Program Address Code
MAPAD	-	Military Assistance Program Address Directory
MCN	-	Management Control Number
MCO	-	Marine Corps Order
MFD	-	Manufactured
MFR	-	Manufacturer
MHI	-	Material Handling Industry
MHz	-	Megahertz
MIL-DTL	-	Military Detail Specification
MIL-PRF	-	Military Performance Specification
MIL-STD	-	Military Standard Practice
MILSTRIP	-	Military Standard Requisitioning and Issue Procedures
MSL	-	Military Shipping Label
MWO	-	Modification Work Order
NA	-	North American
NALC	-	Navy Ammunition Logistics Code

Source: https://assist.dla.mil -- Downloaded: 2016-10-21T11:13Z
Check the source to verify that this is the current version before use.

TABLE II. Other abbreviations and acronyms – Continued.

NATO	-	North Atlantic Treaty Organization
NAVSUP PUB	-	Navy Supply Systems Command Publication
NEW	-	Net Explosive Weight
NIIN	-	National Item Identification Number
NMCS	-	Not Mission Capable Supply
NOA	-	Notice of Availability
n.o.s.	-	Not Otherwise Specified
NRC	-	Nuclear Regulatory Commission
NSN	-	National/NATO Stock Number
OCONUS	-	Outside Continental United States
OSHA	-	Occupational Safety and Health Administration
PCB	-	Polychlorinated Biphenyl
PDF417	-	Portable Data File 417
PIIN	-	Procurement Instrument Identification Number
PN or P/N	-	Part Number
P/O	-	Part Of
POD	-	Port of Debarkation
POE	-	Port of Embarkation
PSN	-	Proper Shipping Name
QSTAG	-	Quadripartite Standardization Agreement
QTY	-	Quantity
QUP	-	Quantity per Unit Pack
RDD	-	Required Delivery Date
RIC	-	Routing Identifier Code
RF	-	Radio Frequency
RFID	-	Radio Frequency Identification
RORO	-	Roll On – Roll Off
SEAVAN	-	Commercial- or Government-owned (or –leased) Shipping Container
SECNAVINST	-	Secretary of the Navy Instruction
SER NO	-	Serial Number
SKO	-	Sets, Kits, and Outfits
SLC	-	Shelf-life Code
SLEP	-	Shelf Life Extension Program
STANAG	-	Standardization Agreement
TAC	-	Transportation Account Code
TCMD	-	Transportation Control and Movement Document
TCN	-	Transportation Control Number
TGBL	-	Through Government Bill of Lading
TM	-	Technical Manual (Army)
TP	-	Transportation Priority
TTN	-	Transportation Tracking Number
UB	-	Unaccompanied Baggage
UI	-	Unit of Issue
UIC	-	Unit Identification Code
UID	-	Unique Identification

Source: https://assist.dla.mil -- Downloaded: 2016-10-21T11:13Z
Check the source to verify that this is the current version before use.

TABLE II. Other abbreviations and acronyms – Continued.

UII	-	Unique Item Identifier
UIT	-	Unique Item Tracking
ULN	-	Unit Line Number
UM	-	Unit of Measure
UN	-	United Nations
UP	-	Unit Price
UPC	-	Universal Product Code
USD	-	United States Dollar
USTRANSCOM	-	United States Transportation Command
WP	-	White Phosphorus
WT	-	Weight

3.2 Term definitions. See Table III.

TABLE III. Term definitions.

463L System. Aircraft pallets, nets, tie down and coupling devices, facilities, handling equipment, procedures, and other components designed to interface with military and civilian aircraft cargo restraint systems. Though designed for airlift, system components may have to move intermodally via surface to support geographic combatant commander objectives. A loaded 463L System pallet is not considered to be a palletized unit load for marking of identification information in accordance with this standard.

Ammo package. For ordnance or materiel treated as ordnance, the term describes a unit load/palletized unit load, an exterior container within a unit load/palletized unit load, or it is an individual shipping container.

Assembled date. See Shelf life.

Assembly. An item of supply, composed of two or more related parts, that is capable of disassembly (for example, carburetor, powerpack, and intermediate frequency circuit amplifier).

Bar code. An array of rectangular bars and spaces in a predetermined pattern representing coded elements of data that can be automatically read and interpreted by automatic bar code reading devices.

Case. It is either an exterior container within a palletized unit load or it is an individual shipping container.

Classified items. See Protected cargo.

Cognizant activity. The activity having responsibility for a contract or jurisdiction over it. At a contractor's facility, the cognizant activity is the administrative contracting officer or the procuring contracting officer. Contractor personnel do not qualify as the cognizant activity. At DoD installations, this is the head of the agency, bureau, command, or Service that is responsible for storage and shipment.

Source: https://assist.dla.mil -- Downloaded: 2016-10-21T11:13Z
Check the source to verify that this is the current version before use.

TABLE III. Term definitions – Continued.

Commercial and Government Entity (CAGE) code. A five-position alpha-numeric code applicable to all activities that have produced or are producing items used by the Federal Government and to Government activities which control design or are responsible for development of certain specifications, drawings, or standards. This is the US version of the NATO CAGE code (NCAGE).

Common-user transportation. Transportation and transportation services provided on a common basis for two or more Department of Defense (DoD) agencies, and authorized non-DoD agencies. Common-user assets are under the combatant command (command authority) of the Commander, U.S. Transportation Command (TRANSCOM), excluding Service-unique or theater-assigned assets.

Consignee (receiver). Party to whom materiel is shipped and whose name and address appear in the "ULTIMATE CONSIGNEE OR MARK FOR" block of the shipping label.

Consignor (shipper). Party who ships materiel and whose name and address appear in the "FROM" block of the shipping label.

Consolidated shipment unit. A shipment unit with multiple line items, or a shipment unit containing other shipment units, or a shipment unit with a mix of line items and other shipment units.

Consolidation container. A container used to consolidate more than one line item into a single shipping container to be shipped to one destination, but not necessarily to one addressee.

Content Level Detail. Content level detail includes those data elements that describe the asset or item being shipped plus the data elements necessary to minimally identify each level of a complete shipment entity. The most basic entity is a single box or unpacked item governed by a shipment unit identifier. The data elements are specifically described in DTR 4500.9-R, Defense Transportation Regulation.

Contract Line Item Number (CLIN). A four to six-digit number used to identify each delivery date and/or destination's quantity in the contract schedule.

Contract number, or purchase order number, or procurement instrument identification number (PIIN). The acquisition instrument identification number appearing on the acquisition document. Some DoD contracts refer to the contract or purchase order number, together with the delivery order number, as the PIIN.

Controlled items. See Protected cargo.

Consolidated shipment unit. See Shipment unit.

Cured date. See Shelf life.

Customer direct. Customer direct (formerly direct vendor delivery (DVD)) is a streamlined distribution method that requires vendor delivery directly to a customer or Defense Transportation System (DTS) transshipment point. Many customer direct efforts include a customer-transparent interface with military standard requisitioning and issue procedures (MILSTRIP).

Data area/field title. See Human-readable information.

Source: https://assist.dla.mil -- Downloaded: 2016-10-21T11:13Z
Check the source to verify that this is the current version before use.

TABLE III. Term definitions – Continued.

Defense Transportation System (DTS). That portion of the nation's transportation infrastructure that supports DoD transportation common-user transportation needs across the range of military operations. It consists of those common-user military and commercial assets, services, and systems organic to, contracted for, or controlled by the DoD.

Department of Defense Activity Address Code (DODAAC). A distinct six-position alphanumeric code assigned to identify specific units, activities, or organizations as found in the Department of Defense Activity Address Directory.

Definitive UI. See Unit of issue (UI).

Electrostatic discharge (ESD) sensitive devices. Electrical and electronic devices that are susceptible to damage from electrostatic discharge (static electricity). These devices include, but are not limited to, integrated circuits and discrete devices (e.g., resistors, transistors, and other semiconductor devices).

Expiration date. See Shelf life.

Exterior container. A container, bundle, or assembly that is sufficient by reason of material, design, and construction to protect unit packs and intermediate containers and their contents during shipment and storage. It can be a unit pack or a container with a combination of unit packs or intermediate containers. An exterior container may or may not be used as a shipping container.

Field titles. See Human-readable information.

Free text. See Human-readable information.

Generic military shipping label (MSL). A term used to identify the MSL used for cargo other than unit move cargo documented in accordance with DTR 4500.9-R Part III or other than personal property cargo documented in accordance with DTR Part IV. Generic MSL use procedures are in DTR Part II.

Government Bill of Lading (GBL). A Government document used to procure transportation and related services from commercial carriers.

Hardness critical item (HCI). Items at any assembly level which are mission critical and could be designed, repaired, manufactured, installed, or maintained for normal operation and yet degrade a system's survivability in a nuclear environment if hardness were not considered. HCIs will only be replaced with other HCI-approved items.

Hazardous materials. An item of supply consisting of materiel that because of its quantity, concentration, or physical, chemical, or infectious characteristics, may either cause or significantly contribute to an increase in mortality or an increase in serious, irreversible, or incapacitating reversible illness; or pose a substantial present or potential hazard to human health or the environment when improperly treated, stored, transported, disposed of, or otherwise managed. This includes all items listed as hazardous in Titles 29, 40, 49 CFR and other applicable modal regulations effective at the time of shipment.

Source: https://assist.dla.mil -- Downloaded: 2016-10-21T11:13Z
Check the source to verify that this is the current version before use.

TABLE III. Term definitions – Continued.

Human-readable information. Information intended to be conveyed to a person. Human-readable information in lieu of machine-readable information is commonly referred to as text. Human-readable information applications in association with bar code or two-dimensional symbol are identified as:

a. Human-readable interpretation. An exact, literal interpretation of the encoded bar code data presented in a human-readable font.

b. Human translation. Human-readable information provided within proximity of the machine-readable bar codes/symbols representing portions of the encoded information with the respective data field titles not encoded in the bar code/symbols.

c. Free text. Human-readable information other than what is encoded in the machine-readable bar codes/symbols.

d. Data area/field titles. The titles identify areas/fields comprised of information in machine-readable or human-readable form.

Inner packaging. Inner packaging means a packaging for which an outer packaging is required for transport. It does not include the inner receptacle of a composite packaging. (Title 49 CFR)

Inspect/test date. See Shelf life.

Interior container. A container that is inside another container. It may be a unit pack or an intermediate container that is placed inside an exterior container or shipping container.

Intermediate container. A wrap, box, or bundle containing two or more unit packs of identical items. Normally one or more intermediate packages will be bundled to make a shipping container.

Item. A single hardware article or single unit formed by a grouping of subassemblies, components, or constituent parts (as specified in MIL-STD-130).

Item description (nomenclature). The name and description of an item as it appears in the contract, purchase order, requisition, or Issue Release/Receipt Document (DD Form 1348-1A).

Item unique identification (IUID). See Unique identification (UID).

IUID equivalent. See Unique identification (UID).

Light (lite) box. For ammunition and explosive applications, a light (lite) box is a standard box or container, specified by item packaging drawing, containing less than the standard NSN unit pack quantity for the item.

Loose or unpacked item. An identifiable item that is unencumbered by a tie, wrap, or container.

Lot, batch, or identification control number. That series of numbers or letters, or both, that are established to record the production and control of the product.

Manufactured date. See Shelf life.

Military Standard Requisitioning and Issue Procedures (MILSTRIP). A uniform procedure established by the DoD for use within the DoD to govern requisition and issue of materiel within standardized priorities.

Source: https://assist.dla.mil -- Downloaded: 2016-10-21T11:13Z
Check the source to verify that this is the current version before use.

TABLE III. Term definitions – Continued.

Modification work order (MWO). Official publication providing authentic and uniform instructions for the alteration and modification of existing materiel, including joint Service publications published as retrofit orders.

Multipack. An exterior container or palletized unit load packed with assorted line items and marked as a "MULTIPACK" (see 5.1.2.1.b).

National/NATO stock number (NSN). A 13-digit number that is divided into two parts, the Federal supply class (FSC) number and the national item identification number (NIIN). The FSC is the first four digits of the NSN that establishes its relationship to other items within the same FSC. The NIIN is the last nine digits of the NSN. The first two digits of the NIIN identify the country assigning the two numbers referred to as the National Codification Bureau codes. The remaining seven are serially assigned numbers. When shown in the contract/requisition, the NSN includes any prefixes and suffixes.

Nomenclature. See Item description (nomenclature).

Nondefinitive UI. See Unit of issue (UI).

Ordnance. Explosives, chemicals, pyrotechnics, and similar stores, e.g., bombs, guns and ammunition, flares, smoke, or napalm. Source: JP 3-15

Pack/Package. An instance of packing. For ammunition, explosives, or materiel treated as ordnance, the term describes a unit load/palletized unit load, an exterior container within a unit load/palletized unit load, or it is an individual shipping container.

Packaging. A means of specifying the preservation and packing that a given item requires to ensure that it is not degraded during shipment and storage.

a. Preservation. Application of materials and/or methods designed to protect an item during shipment, handling, indeterminate storage, and distribution to consignees worldwide. Military methods of preservation are defined in MIL-STD-2073-1. The date of preservation is the date the item was placed in the unit pack.

b. Packing. Application of any exterior protective methods, materials, or devices to assure the integrity of the item. The assembly of items into a unit pack, an intermediate or exterior container, or a palletized unit load.

c. Packed date. See Shelf life.

Packing. See Packaging.

Palletized unit load. A quantity of items, packed or unpacked, arranged on a pallet in a specified manner and secured, strapped, or fastened on the pallet so that the whole palletized load is handled as a single unit. A palletized or skidded load is not considered to be a shipping container. A loaded 463L System pallet is not considered to be a palletized unit load for marking of identification information in accordance with this standard. Also see Unit load.

Parcel post. Any packed materiel placed in United States Postal Service channels.

Passive radio frequency identification (RFID) tag. An RFID device which modulates and reflects a carrier signal from an interrogator. Passive RFID tags operate without a separate external power source and obtain operating power generated from the reader.

Source: https://assist.dla.mil -- Downloaded: 2016-10-21T11:13Z
Check the source to verify that this is the current version before use.

TABLE III. Term definitions – Continued.

Pilferable items. See Protected cargo.

Polychlorinated biphenyl (PCB). An organic chemical, synthetically manufactured and used primarily in electrical equipment. It is harmful to human health and the environment.

Port of debarkation (POD). An authorized point where shipments enter a country, either into the continental United States (CONUS) or into a foreign country.

Port of embarkation (POE). An authorized point where shipments leave a country, either from CONUS or from a foreign country.

Preservation. See Packaging.

Project code. A three-position alphanumeric code which identifies plans, programs, and exercises.

Proper shipping name (PSN). The name of a hazardous material shown in Roman print (not italics) in Title 49 CFR, Part 172 and in other hazardous materials related publications.

Protected cargo. Items that are required to be secured, identified, segregated, handled, or accounted for in such a manner as to ensure their safeguard or integrity. Protected cargo is subdivided into classified, controlled, pilferable, and sensitive items.

a. Classified items. Items that are of a classified nature and have a security classification.

b. Controlled items. Items that require additional control and security as prescribed in various regulations and statutes. Controlled items include money, negotiable instruments, narcotics, registered mail, precious metal alloys, ethyl alcohol, and objects that could be utilized in the illegal use of drugs (i.e. hypodermic needles).

c. Pilferable items. Items that are vulnerable to theft because of their ready resale potential, such as cigarettes, alcoholic beverages, cameras, electronic equipment, and clothing and textiles.

d. Sensitive items. Items such as small arms, ammunition, and explosives with the potential for use during civil disturbances, domestic unrest, or if used by criminal elements. In the hands of militant or revolutionary organizations, these items present a definite threat to public safety.

Quantitative expression. See Unit of issue (non-definitive UI).

Quantity per unit pack (QUP). The quantity of items in a unit pack given in the terminology of the definitive unit of issue. When a nondefinitive unit of issue is assigned to the stock item, it may be further quantified by a unit of measure and measurement quantity. Also see Unit of issue (UI).

Radio Frequency Identification (RFID). An automatic identification and data capture technology comprised of one or more reader/interrogators and one or more RF transponders in which data transfer is achieved by means of suitably modulated inductive or radiating electromagnetic carriers.

Source: https://assist.dla.mil -- Downloaded: 2016-10-21T11:13Z
Check the source to verify that this is the current version before use.

TABLE III. Term definitions – Continued.

Radioactive material. Any material, or combination of materials, which spontaneously emit ionizing radiation, including materials that possess artificial, induced, and natural radioactivity. Materials in which the estimated specific activity is not greater than 70 Bq grams (0.002 microcuries/gram) of material, and in which the radioactivity is essentially uniformly distributed, are not considered to be radioactive materials.

Required delivery date (RDD). The day of the year (e.g., 087, 198, etc.) specified on the requisition when materiel is required by the requisitioner or the consignee.

Security assistance. A group of programs authorized by the Foreign Assistance Act of 1961, as amended, and the Arms Export Control Act, as amended, or other related statutes by which the United States provides defense articles, military training, and other defense-related services by grant, credit, cash sale, lease, or loan in furtherance of national policies and objectives. Foreign Military Sales (FMS) is one of the security assistance programs.

Sensitive items. See Protected cargo.

Serial number. An assigned designation that provides a means of identifying a specific individual item.

Serialized item management. Identifies populations of select items (parts, components, and end items); marks all items in each population with a unique identifier; and generates, collects, and analyzes maintenance, logistics, and usage data about each specific item, as described in DoDI 4151.19.

Shelf life. The total period of time beginning with the date of manufacture, cure, assembly, or pack and terminated by the date by which the item must be placed into service (expiration date) or subjected to inspection, test, and/or restoration (inspect/test date). Shelf life should not be confused with service life.

a. Assembled date. The date items or parts are assembled into components, assemblies, sets, kits, or outfits (CASKO), or the date various CASKOs are assembled into a larger unit.

b. Cured date. The date the item or materiel was altered industrially, as to vulcanize (rubber) or to treat (synthetic elastomers) with heat or chemicals to make them infusible.

c. Expiration date. The date by which nonextendible shelf-life items (Type I) will be discarded as no longer suitable for issue/use.

d. Inspect/test date. The date by which extendible shelf-life items (Type II) will be subjected to visual inspection, certified laboratory tests, or restoration.

e. Manufactured date. The date the item, materiel, or commodity was fabricated, processed, produced, or formed for use. For drugs, chemicals, and biologicals, the date of manufacture for products submitted to the Food and Drug Administration (FDA) for certification prior to release is the date of the official certification notice. For products manufactured under the license of the Agricultural Research Service (ARS), the date manufactured conforms to the definition established by the ARS. The date of manufacture will not be shown for medical items having expiration dates.

Source: https://assist.dla.mil -- Downloaded: 2016-10-21T11:13Z
Check the source to verify that this is the current version before use.

TABLE III. Term definitions – Continued.

f. Packed date. For subsistence items only, the packed date will be the date on which the item was packaged in the unit pack, regardless of the date of packing, shipping, or additional processing.

Shelf-life code (SLC). A code assigned to a shelf-life item to identify the number of months of original shelf life and also whether the original shelf life is nonextendible (Type I) or extendible (Type II).

Shelf-life item. An item of supply that possesses deteriorative or unstable characteristics to the degree that a storage time period is assigned to ensure that the item will perform satisfactorily in service.

a. Type I shelf-life item. An individual item of supply which is determined through an evaluation of technical test data and/or actual experience, to be an item with a definite non-extendible period of shelf life. One exception is Type I medical shelf-life items that may be extended if they have been accepted into and passed testing for extension in the DoD/FDA Shelf-Life Extension Program (SLEP).

b. Type II shelf-life item. An individual item of supply having an assigned shelf-life time period that may be extended after completion of visual inspection/certified laboratory test, and/or restorative action.

Shipment unit. A shipment unit has a unique transportation control number (TCN) assigned to it for accounting, control, and visibility throughout its life cycle in the Defense Transportation System. It may be divided into partial or split increments for movement on different conveyances; and it is one of the following:

a. Single shipment unit (one item). A single line item of supply destined to one consignee; or,

b. Single shipment unit (multiple items). Two or more compatible line items having the same consignee/destination, commodity code, and transportation account code; shipped together in the same container, or the same conveyance, or the same SEAVAN (without regard to commodity code), or as loose packages banded together into a single piece, or as a set or assembly; or,

c. Consolidated shipment unit. Two or more compatible shipment units aggregated into a consolidated shipment unit.

Shipping container. An exterior container which meets carrier regulations and is of sufficient strength, by reason of material, design, and construction, to be shipped safely without further packing (e.g., wooden boxes or crates, fiber and metal drums, and corrugated and solid fiberboard boxes).

Single shipment unit (one item or multiple items). See Shipment unit.

Supply condition codes for shelf-life items. Specific codes that provide standard criteria at the wholesale/retail level and designate the remaining shelf life of an item from dates of manufacture, cure, assembly, packing (subsistence only), inspect, test, or restoration action. The codes indicate the classification of materiel that reflects its readiness for issue and use or to

Source: https://assist.dla.mil -- Downloaded: 2016-10-21T11:13Z
Check the source to verify that this is the current version before use.

TABLE III. Term definitions – Continued.

identify the action underway to change the status of materiel. DLM 4000.25-1 provides a complete listing of these codes and their definitions as related to shelf-life items/materiel.

Transportation control number (TCN). The single standard shipment identification number for all DoD-sponsored movements (i.e., materiel and equipment and all vendor-shipping transactions involving DoD materiel). The TCN is a 17-position alphanumeric data element assigned to control a shipment unit through the transportation system (to include CONUS shipments, shipments entering the DTS, and commercial systems).

Transportation tracking number (TTN). The TTN is a unique, serialized 17-digit number generated by a shipping application for specific unit move shipments. The TTN is derived from the unique 13-digit transportation tracking account number generated for each unit line number (ULN) created in an operations plan during execution. The TTN generation process is scheduled for implementation subject to application system funding.

Unique identification (UID). See following subtopics, the DoD Guide to Uniquely Identifying Items, and MIL-STD-130.

a. Item unique identification (IUID). A system of establishing unique item identifiers within the DoD by assigning a machine-readable character string or number to a discrete item, which serves to distinguish it from other like and unlike items.

b. Unique item identifier (UII). A globally unique and unambiguous identifier that distinguishes an item from all other like and unlike items. The UII is derived from a UII data set of one or more data elements. The term includes an IUID equivalent.

c. UID equivalent. Item unique identification methods in commercial use that have been recognized by DoD for use as unique item identifiers (UIIs).

Unique item tracking (UIT). A program within DoD for tracking selected items to maintain visibility of each uniquely identified asset for the primary purpose of inventory control and/or engineering analysis. (DLM 4000.25-1)

Unit load. For ammunition, explosives, ordnance, or materiel treated as ordnance, an assemblage of two or more items (in or out of ammo packages) designed to permit handling these items as a single entity during transportation and storage. Also see Palletized unit load.

Unit move cargo. A descriptive term used to identify cargo documented in accordance with DTR 4500.9-R Part III procedures.

Unit of issue (UI) – see 3.1.a. The UI is a standard or basic quantity that is expressed as a unit and indicated in a requisition, contract, or order as the minimum quantity issued (bottle, can, dozen, each, foot, gallon, gross, pair, pound, yard, etc.) and to which a unit price is ascribed. The UI codes are specified in DoD 4100.39-M, Volume 10, Table 53. A DLA Logistics Management Standards updated list of UI code definitions and their respective ANSI ASC X12.3 Data Element 355 (Unit or Basis for Measurement) codes are specified in the Unit of Issue and Purchase Unit Conversion Guide (Unit or Basis for Measurement) (DoD Code Sequence) at http://www2.dla.mil/j-6/dlmso/eApplications/LogDataAdmin/dlmsansiconverguides.asp.

Source: https://assist.dla.mil -- Downloaded: 2016-10-21T11:13Z
Check the source to verify that this is the current version before use.

TABLE III. Term definitions – Continued.

a. Definitive UI. A definitive UI is a type of UI designation that indicates an exact quantity of volume, linear measurement, weight, or count (e.g., assembly, each, kit, set, foot, pound, gallon, etc).

b. Non-definitive UI. A non-definitive UI is a type of UI designation that does not indicate an exact quantity of volume, linear measurement, weight, or count (e.g., drum, can, box, or roll). When a non-definitive UI is specified, it is usually accompanied by a UI quantitative expression (e.g., 1 RO (150 ft) or 1 RL (50 ft)). The quantitative expression specifies the content (decimal locator, quantity, and unit of measurement) of the non-definitive unit of issue assigned to an item of supply. (DoD 4100.39-M)

Unit of measure (UM) – see 3.1.a. The narrative indicating the recognizable physical measurements used in the application of DoD 4100.39-M conversion criteria. The UM codes are specified in DoD 4100.39-M, Volume 10, Table 81.

Unit pack. The first tie, wrap, or container applied to a single item, or a quantity thereof, or to a group of items of a single stock number, preserved or unpreserved, which constitutes a complete or identifiable package.

Unpacked item. An identifiable item that is unencumbered by a tie, wrap, container.

Warranty marking. Marking that applies when a shipment contains items with a service life defined in a specific amount of hours, a specific end date, or a specific operating time.

4. GENERAL REQUIREMENTS

4.1 Marking unit packs, intermediate and exterior containers, unit loads, palletized unit loads, and loose or unpacked items. Marking shall be accomplished by any means that provides the required degree of legibility and durability. Marking may be applied by tagging, stenciling, stamping, machine printing, or labeling (using preprinted labels). Although machine printing is preferred, hand printing may be used for marking packs and containers if permitted by the cognizant activity. Hand printing is not authorized for ammunition containers.

4.2 Marking, marking materials, and methods.

4.2.1 Marking materials. Marking materials used shall be those materials specified in this standard or alternate choices approved by the cognizant activity. Contractors may obtain the DoD-unique labels (e.g. DD Form 250) discussed herein from commercial sources after obtaining samples from either the procuring activity or the local Defense Contract Management Agency (DCMA) office. Also see http://www.dtic.mil/whs/directives/infomgt/forms/index.htm.

4.2.1.1 Waterproofing materials used as protective coatings. Waterproofing materials such as spar varnish, acrylic coating compound, sealing compound, label adhesive, polyurethane coatings, and pressure-sensitive tape that does not restrict or preclude legibility or readability of the package marking, shall be used as protective coatings on container marking.

Source: https://assist.dla.mil -- Downloaded: 2016-10-21T11:13Z
Check the source to verify that this is the current version before use.

4.2.1.2 Stencil-marking material. Any opaque, nonfading, fast drying, weather resistant stencil ink, lacquer, paint, or enamel shall be used for stencil marking. MIL-DTL-64159 or MIL-DTL-53039 paint shall be used for stenciling containers that have a chemical agent resistant coating (CARC) applied to them.

4.2.1.3 Obliterating lacquer, enamel, or paint. Any quick-drying, opaque lacquer, ink, enamel, or paint that approximates the color of the container shall be used for the obliteration of marking. When obliterating CARC painted marking on metal reusable containers, paint conforming to MIL-DTL-64159 or MIL-DTL-53039, Green 383, paint chip color 34094 or Tan 686A, paint chip color 33446 of FED-STD-595, shall be used. Green shall be used on green or green camouflage and tan shall be used on tan or desert sand camouflage colored containers.

4.2.1.4 Lithographing, embossing, roller coating, stamping, and inkjet marking. When lithographing, embossing, or roller coating of marking is authorized, commercial enamels, lacquers, or inks in the color specified shall be used. When stamping or inkjet marking is specified, commercial waterproof and petroleum-resistant inks, in the color specified, shall maintain sufficient durability during exposure to field service.

4.2.2 Labels, pressure-sensitive, water-resistant. Labels shall be of a water-resistant grade of paper, film, fabric, or plastic, coated on one side with water-insoluble, permanent type adhesive. The adhesive shall adhere to metal, plastic, aluminum or fiberboard surfaces under high and low temperatures. Labels shall have a finish suitable for printing and writing on with ink without feathering or spreading, be capable of withstanding normal handling and storage conditions, and remain securely in position. Application specific performance criteria and durability requirements to ensure functionality in various climatic environments should be tailored, if required, using MIL-PRF-61002. MIL-PRF-61002 can be used as an acquisition tool when labels presently being used are not performing satisfactorily or when new conditions or applications require special label stock for those particular situations. Identification bar code labels on exterior containers, palletized unit loads, and unpacked items shall meet the requirements of 5.4.2.1.

4.2.2.1 Use of labels. Pressure-sensitive labels that meet the requirements of 4.2.2 may be used on containers/surfaces other than wood without prior surface preparation. When pressure-sensitive labels are used on wood containers/surfaces, the labeling area shall be suitably prepared to ensure adhesion.

4.2.2.2 Protective coating of labels. If labels for exterior containers, palletized unit loads, and unpacked items, except vehicles and related items, are not inherently waterproof, they shall be waterproofed by coating the entire outer surface of the label with a transparent, waterproofing material (see 4.2.1.1). Exterior identification bar code labels shall be protected in accordance with 5.4.5.4.

4.2.2.3 Affixing and securing labels (except for labels on vehicles and related equipment). Labels that are other than pressure-sensitive shall be securely affixed with a water-resistant label adhesive or a transparent, waterproof, pressure-sensitive tape.

Source: https://assist.dla.mil -- Downloaded: 2016-10-21T11:13Z
Check the source to verify that this is the current version before use.

4.2.3 Shipping tags. Shipping tags are recommended for use when it is impractical to stencil mark or apply a label on the container or unpacked item. Shipping tags of metal, cloth, plastic, paper, or other durable material shall be used to provide the required marking when specified herein or when it is impractical to stencil mark or apply a label on a container or unpacked item. Separate tags shall be used for identification and address marking.

4.2.4 Water-resistant envelopes. Water-resistant envelopes shall be used for packing lists, serial number lists, and materiel release/receipt documents, etc. Securely affix or fasten the envelope to the package or container, palletized unit load, or unpacked item.

4.2.5 Conditions of surfaces to be marked. All surfaces to be marked shall be in a condition so that the marking remains permanent, legible, and nonfading. All marks not applicable to the shipment shall be obliterated. When shipping containers are consolidated into container vans for shipment to an ultimate consignee, obliteration of current address marking is not required.

4.2.6 Marking legibility, durability, and color. Marking shall be clear, legible, durable, non-fading, and sufficient to withstand normal exposure to environmental and handling conditions to which the package/container might be subjected. Bar code print quality shall conform to 5.4.2. Unless instructed otherwise in the contract, purchase order, or drawing, packages constructed of wood or lightly colored materials shall be marked using a black color and packages constructed from green or black materials shall be marked using a white or yellow color.

4.2.7 Marking board or marking panel. Marking shall be applied to marking boards and marking panels as specified herein or in the contract or purchase order.

4.2.8 Size of marking. Unless otherwise specified herein or by the cognizant activity, the lettering/marking shall be in capital letters of equal height, clearly visible, and the largest size practical for the package size within the acceptable range. When marking space permits, stenciled or pre-printed marking shall be not less than 0.09 inch (2.3 mm).

5. DETAILED REQUIREMENTS

NOTES:

1. Ammunition and explosives identification marking exclusions to the general requirements of this section are as noted.

2. A loaded RORO trailer/vehicle, loaded SEAVAN, loaded 463L System pallet, or other unitized load documented as a shipment unit consolidation in accordance with DTR 4500.9-R Part II Appendix M or unit move cargo documented in accordance with DTR 4500.9-R Part III are exempt from the identification marking requirements in this standard.

5.1 Identification text marking (for ammo/explosives – see 5.14). Identification marking consists of text marking and bar code marking. Identification marking is intended to provide receipt process information for vendor sourced material and storage process information for

Source: https://assist.dla.mil -- Downloaded: 2016-10-21T11:13Z
Check the source to verify that this is the current version before use.

accurate stock accounting. Figure 1 shows an example of the content and approximate placement of the identification text marking and the alternative identification bar code marking on unit packs, intermediate containers, and exterior containers. Unless specifically exempted in the contract or solicitation, or this standard, the marking shall be applied to all DoD and contractor-originated or vendor-originated shipments.

NOTES:

1. Identification bar code marking is specified in 5.4.

2. Marking materials, methods, and size of the identification text is specified in 4.2. The exact placement of identification text and identification bar code marking on specific containers may vary in configuration and format from those shown in the figures in 5.3.

3. Hazardous item identification marking is specified herein and in 5.13.

4. Ammunition and explosives identification marking is specified in 5.14.

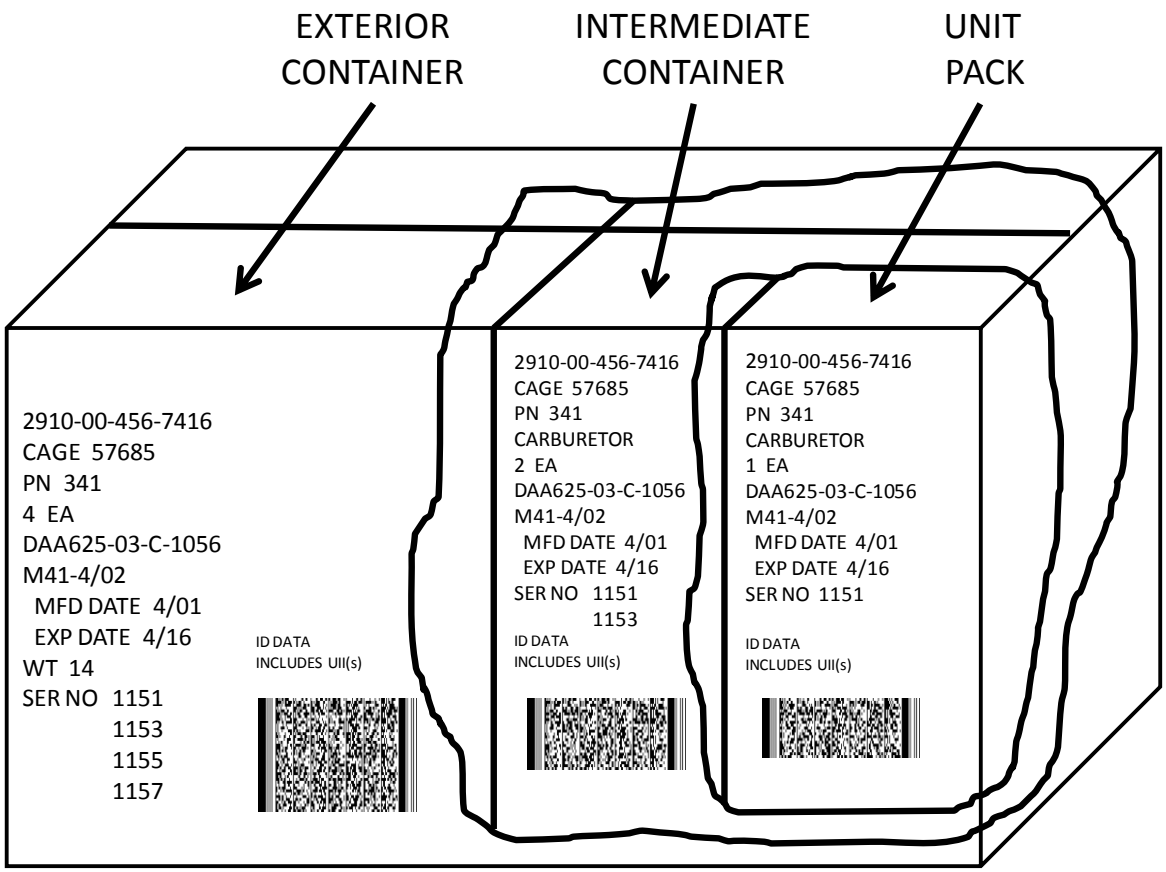

NOTE: For hazardous marking, see 5.13. Linear bar codes are optional when the 2D (PDF417) bar code includes the identification data.

FIGURE 1. Example of unit pack, intermediate and exterior container identification text marking and 2D (PDF417) bar codes.

Source: https://assist.dla.mil -- Downloaded: 2016-10-21T11:13Z
Check the source to verify that this is the current version before use.

5.1.1 Identification text marking on unit packs and intermediate containers. Unless specifically exempted in the contract or solicitation, the following identification text information shall be marked on all unit packs and intermediate containers, in the order listed. This requirement applies to all unit packs and intermediate containers repacked for shipment by military installations. Additional identification marking may be required by the contract and shall be placed either below the identification text marking or in a conspicuous location on the identification-marked side of the container. Unit packs used as exterior containers at the time of packaging shall be marked in accordance with 5.1.2.

a. NSN/NATO stock number. The in-the-clear NSN text, if applicable, shall include spaces or dashes and any prefix or suffix specified in the contract or solicitation. If no NSN is assigned, the blank line may be omitted.

NOTE: The encoded NSN in the linear (Code 39) or 2D (PDF417) bar codes and human-readable interpretation below the linear (Code 39) bar code, as applicable, shall not include spaces or dashes, unless otherwise specified in the contract or solicitation.

b. CAGE code. The CAGE code of the company awarded the contract for the item being shipped. The CAGE code shall be preceded by the abbreviation “CAGE”.

c. Part number. If a PN is specified in the contract or order, then only that PN shall be shown. The PN specified in the contract may be the PN assigned by the Government procuring activity, or it may be the PN of the actual manufacturer or the PN assigned to the item by the company awarded the contract. For shipments sent directly from a subcontractor to a DoD addressee, the PN of the company awarded the contract shall be shown. The part number shall be preceded by the abbreviation “PN” or “P/N”. If the item has no PN assigned to it or if no PN is cited, the blank line may be omitted.

d. Item description or nomenclature. The exact name and description of an item as it appears in the contract, purchase order or requisition shall be shown. Item description may be marked on more than one line if required due to space limitations. Standard abbreviations, although not desired, may be used if marking length is excessive.

e. Quantity and UI. A non-definitive UI shall be accompanied by a quantitative expression such as “1 RO (100 FT)”.

f. Contract number or purchase order number (procurement instrument identification number (PIIN)) including four-digit delivery order or call number, modification for change order number (see 5.10.12), and lot number (see 5.10.13) shall be shown. The in-the-clear contract number shall include the dashes as shown in the contract, i.e., DAAB07-96-C-1234. Additional information may be required by the contract or purchase order.

g. Military preservation method and date of unit preservation (e.g., “M41-4/02” – method 41, from MIL-STD-2073-1, was provided in April 2002). Use of the letter M in the first position indicates the pack is a military preservation method; “41” is the method number;

Source: https://assist.dla.mil -- Downloaded: 2016-10-21T11:13Z
Check the source to verify that this is the current version before use.

"4/02" indicates the date of preservation. For specialized preservation codes, use the code from MIL-STD-2073-1, Table J-Ia. (e.g., "MBC-4/02" – method BC was provided in April 2002). Method of preservation code "ZZ" shall be shown as 'ZZ'. If a military preservation method does not apply, the method space shall be left blank. If a preservation date does not apply, the pack date shall be shown (e.g. "6/15").

h. Shelf life. Shelf-life marking, if applicable, shall be applied as specified in 5.10.1. The shelf life dates shall be preceded with text or abbreviations to identify the nature of the dated event. See examples following 5.10.1.b) and also see 5.1.2.1.c. (1).

i. Serial number(s). When an item is assigned a serial number, that number shall be applied and preceded by the abbreviation "SER NO" (see 5.4.1.1.1). Serial numbers assigned by the manufacturer solely for the purpose of indicating the quantity produced should not be shown.

j. Hazardous materials. Hazardous materials (HAZMAT), ammunition, and explosives marking (see 5.13 and 5.14).

NOTE: Identification bar code marking requirements, encoding of the UII(s), bar code configurations, and bar code formats for unit packs and intermediate containers are specified in 5.4.1.1

5.1.2 Identification text marking on exterior containers, palletized unit loads, and unpacked items (see multiple figures in 5.3. Unless specifically exempted in the contract or solicitation or this standard, the following minimum identification text information shall be marked on all exterior containers, palletized unit loads, and unpacked (loose) items in the order listed. When a palletized unit load of containers or items is formed, the individual containers or unpacked items shall be marked with exterior container identification text marks or unpacked item identification text marks, subject to exceptions noted in 5.3.2.7. A DoD originated shipment packaged in an overpack enclosure (protective outer packaging or palletized unit load) for convenience of handling during transportation is exempt from identification marking under the following conditions: the overpack enclosure is not an assorted-items pack (see 5.1.2.1), the cargo is non-hazardous, the unpacked items or containers within the overpack enclosure are marked/tagged with identification information in accordance with this standard, and the overpack enclosure is not intended for storage at destination. The minimum text information is:

a. NSN/NATO stock number (see 0.a).

b. CAGE code (see 0.b).

c. Part number (see 0.c).

d. Item description or nomenclature. Unless otherwise specified, shall be blank. Required for hazardous items as specified herein (see 0.d). For protected cargo see 5.4.1.6.

e. Quantity and UI (see 0.e).

Source: https://assist.dla.mil -- Downloaded: 2016-10-21T11:13Z
Check the source to verify that this is the current version before use.

f. Contract number or purchase order number (PIIN). The contract number or PIIN, including four-digit delivery order or call number, modification for change order number, and lot number shall be shown (see 0.f).

(1) When more than one contract is applicable to an assorted-items pack, the contract number is not required on the exterior container or palletized unit load, but shall be applied to each unit pack and container in the exterior container or palletized unit load.

(2) Unless specifically required by a military Service or Agency directive, contract identification marking (specifically 5.1.2.f) is not required on exterior containers, palletized unit loads, or unpacked items when items are repacked for shipment by military installations.

(3) For DLA Troop Support clothing and textile (C&T) items, the following additional marking is required: shipment number and container number. The container number shall be consecutively numbered from each shipping point for the duration of the contract. For multiple container shipments of C&T items, the packing list shall be placed inside the last container to be loaded for each shipment. The words "PACKING LIST HERE" shall be marked on the container.

g. Military preservation method, date of unit preservation, or pack date (see 0.g).

h. Gross weight. The gross weight shall be expressed in pounds rounded up to the nearest pound. The gross weight shall be preceded by the abbreviation "WT".

i. Proper shipping name (PSN) and North American (NA) or United Nations (UN) HAZMAT identification number, where assigned (see 5.13.2).

j. Shelf life. Shelf-life marking, if applicable (see 0.h).

k. Serial number(s). When an item is assigned a serial number, that number shall be applied and preceded by the abbreviation "SER NO" (see 5.4.1.2.1). Serial numbers assigned by the manufacturer solely for the purpose of indicating the quantity produced should not be shown.

l. Hazardous materials. Hazardous materials (HAZMAT), ammunition, and explosives marking (see 5.13 and 5.14).

NOTE: Identification bar code marking requirements, encoding of the UII(s), bar code configurations, and bar code formats for exterior containers, palletized unit loads, and unpacked items are specified in 5.4.1.2.

Source: https://assist.dla.mil -- Downloaded: 2016-10-21T11:13Z
Check the source to verify that this is the current version before use.

5.1.2.1 Package marking for assorted-items pack.

a. Related assorted-items pack. When an assortment of related items (comprised of mixed stock numbers that support an end item but the assortment cannot be identified under one stock number) is packed in a shipping container or palletized unit load, the following shall be applied in lieu of the standard identification text information: a brief description of the contents (e.g., spare parts to NSN XXXX), the contract number or purchase order number (PIIN) (if applicable to all items), the date of pack (the date the shipment was packed), the gross weight, special marking (as required by 5.10), and additional marks as noted in following sub-paragraphs. Kit or set components shall be segregated and identified by PN or NSN.

b. Unrelated assorted-items pack. When an assortment of unrelated items (comprised of mixed stock numbers that do not support a specific weapon system or end item) is packed into a shipping container or palletized unit load, it shall be marked in lieu of the identification text marking required by 5.1.2 with the following information, in the order listed: the word "MULTIPACK" (line 1), the gross weight (line 2), and additional marks as noted in the following sub-paragraphs. Hand printing on multipacks is permitted. For DLA Troop Support C&T item palletized unit load multipacks, see 5.3.2.7.b.

Example: MULTIPACK
WT 100

c. Additional marks for an assorted-items pack (related or unrelated items).

(1) In addition to shelf-life marking on interior packages or unpacked items, the words "CONTAINS SHELF-LIFE ITEMS" shall be placed below the identification text marking on the exterior container or palletized unit load of an assorted-items pack containing shelf-life materiel.

(2) The words "WARRANTED ITEMS INSIDE" shall be placed immediately below the identification text marking on the exterior container or palletized unit load of an assorted-items pack that contains items covered by a warranty.

(3) The words "MULTIPLE DODAACs" shall be applied to the outside of the exterior container or palletized unit load of an assorted-items pack of individual shipments/containers shipped to a single destination for multiple consignees.

(4) For an assorted-items pack of hazardous materials, see 5.13.3 and 5.13.5.6 for the required container and palletized unit load identification marking and for additional marking of "OVERPACK" and "AIR ELIGIBLE", as applicable.

Source: https://assist.dla.mil -- Downloaded: 2016-10-21T11:13Z
Check the source to verify that this is the current version before use.

(5) Caution marking shall be applied to the outside of the exterior container or palletized unit load of an assorted-items pack as required by this standard (e.g., FRAGILE, arrows, hazardous warning labels, etc.).

(6) For Foreign Military Sales (FMS) shipments, all containers or palletized unit loads containing assorted items (whether related or unrelated) shall be marked as a "MULTIPACK" in accordance with 5.1.2.1.b.

5.2 Address marking (shipping labels). Military (DoD) and contractor- or vendor-originated address marking, to include the military shipping label (MSL) and respective bar codes, shall be as specified in DTR 4500.9-R, Part II, Chapter 208, and as summarized herein. The preferred location for applying address marking to shipping containers, palletized unit loads, and unpacked items are shown in the figures in this section. Exact placement of MSLs may vary slightly from those shown.

5.2.1 Military (DoD) and contractor- or vendor-originated address marking (see Figures 2A and 2B). Unless specifically exempted in the contract or DTR, DoD and contractor or vendor shipping activities shall apply address marking using an MSL with bar codes. This includes shipments moving within CONUS or OCONUS, from CONUS to OCONUS, or conversely from OCONUS to CONUS.

NOTE: Attach a DD Form 1387 (Military Shipment Label) in lieu of a bar coded MSL for DoD contingency operations where manual entry is the only means available to document DTS shipments (see Figure 13).

5.2.2 Military shipping label (MSL) (see Figures 2A and 2B). The MSL shall be completed in accordance with 5.2.2.5 and attached in accordance with 5.3.2. Each shipment unit in a consolidated shipment unit shall be marked with an MSL. For contractor or vendor shipments, the MSL information shall be coordinated between the contractor or vendor and the contracting office or administrative contracting office, per the FAR 47.305-10, FAR 52.247-52, DFARS 247.305-10 and DFARS 247.371.

a. The MSL shall include in-the-clear text entries applicable to the shipment as provided for in 5.2.2.5. When the MSL is generated from DTR 4500.9-R, Part II, Appendix M transportation control movement document (TCMD) related information, the coded data shall be converted to in-the-clear text for printing on the MSL, for example, delete leading zeros from numeric values and convert TCMD alphanumeric code values for pieces, weight, and cube to numeric digits.

b. The MSL shall include linear (Code 39) bar codes formatted in accordance with this standard in reference to ISO/IEC 16388. Three linear (Code 39) bar codes are required including the transportation control number (TCN), piece number without leading zeros, and ultimate consignee/mark for DODAAC.

c. The MSL shall include a 2D (PDF417) bar code in accordance with ANSI MH10.8.1 and ISO/IEC 15438, formatted in accordance with 5.2.2.6 and Appendix A of this standard,

Source: https://assist.dla.mil -- Downloaded: 2016-10-21T11:13Z
Check the source to verify that this is the current version before use.

with reference to DTR 4500.9-R, Part II, Chapter 208, ISO/IEC 15434 for bar code syntax, and ANSI MH10.8.2 for bar code semantics.

NOTE: Not actual size. Recommended label size is 4 by 6 inches (10.2 by 15. 2 cm).

FIGURE 2A. Generic MSL. FIGURE 2B. Unit move MSL.

(1) The 2D (PDF417) bar code shall contain the in-the-clear text information on the MSL as provided for in 5.2.2.6. For contractor or vendor shipments, the TCMD information in the 2D (PDF417) bar code, when required, shall be coordinated between the contractor or vendor and the contracting office or administrative contracting office, per the FAR 47.305-10 and the DFARS 247.305-10 and 247.371.

(2) The 2D (PDF417) bar code line item supply data for MILSTRIP transactions is sourced from DD Form 1348-1A information as noted in DLM 4000.25-1, Appendix 1.35, or as carried forward from the contract/order. The MSL 2D (PDF417) bar code on each piece of a shipment unit shall have the same line item information. For contractor or vendor shipments, this information, as available, and the DFARS 247.305-

Source: https://assist.dla.mil -- Downloaded: 2016-10-21T11:13Z
Check the source to verify that this is the current version before use.

10 minimum requirements, shall be coordinated between the contractor or vendor and the contracting office or administrative contracting office. For non-MILSTRIP transactions, the available information will be limited. Ammunition shipments may also include DoD identification code (DODIC) or Navy ammunition logistics code (NALC) and lot number information. For factors that determine the amount of available data to be recorded in the 2D (PDF417) bar code, see 5.2.2.6.c.

5.2.2.1 MSL size. The recommended size for the MSL is 4 by 6 inches (10.2 by 15. 2 cm). The labels and bar codes in the figures have been reduced in size for ease of publication.

5.2.2.2 MSL label stock quality. The quality of the MSL label stock shall be such that labels are suitable for ink printing without feathering or spreading. The MSL shall withstand normal handling and shipping conditions and remain securely in position. For general label requirements see 4.2. For HAZMAT label requirements are specified in Title 49 CFR.

5.2.2.3 MSL format. The in-the-clear text and bar code entries shall meet required ANSI/ISO standards listed in section 2 and shall comply with 5.2.2.4 through 5.2.2.8, Appendix A detailed formats, and DTR 4500.9-R, Part II, Chapter 208 requirements. The in-the-clear text and linear (Code 39) bar code human-readable interpretation shall be easily human readable. The linear (Code 39) bar code and the 2D (PDF417) bar code shall be easily machine readable. Figures 2A and 2B show examples of acceptable MSL formats that may be used as guidelines in producing a label. ANSI MH10.8.1 is the referenced standard for developing a DTR compliant MSL.

5.2.2.4 Completing the MSL for address marking. The MSL shall be completed as follows to include in-the-clear text or descriptive information, linear (Code 39) bar codes with human-readable interpretation, and a 2D (PDF417) bar code.

a. Linear (Code 39) and 2D (PDF417) bar code labels may be affixed to the MSL as an alternative to direct printing on the MSL, providing the labels do not impact the effectiveness of the MSL.

b. Data identifier (DI) codes shall not be used in conjunction with the linear (Code 39) bar codes.

c. The MSL unique transport unit identifier shall be the TCN and it shall be encoded and printed as the uppermost bar code on the top of the label. Information on TCN construction for the various types of shipments is detailed in DTR 4500.9-R, Part II, Cargo Movement, Appendix L.

d. Linear (Code 39) or 2D (PDF417) bar codes should not be positioned in the same horizontal plane and the label layout should provide as much vertical spacing as available between the bar codes to reduce the possibility of scanning interference.

Source: https://assist.dla.mil -- Downloaded: 2016-10-21T11:13Z
Check the source to verify that this is the current version before use.

e. The text for all entries, except as noted below shall be no smaller than 10 lines per 1 inch (25.4 mm) (approximately a 7 point font). The preferred font size is 10 to 14 points.

(1) The "Ship To" address character height shall be no smaller than the "From" address character height and should be distinctive in appearance, for example, larger, bolder, different color, etc. The "Ship To" address shall be located below or to the right of the "From" address.

(2) The transportation priority numeral shall be bold text and shall be 0.75 inch (19.1 mm) high (approximately a 72-point font).

5.2.2.5 Data content of the MSL (see Figures 2A and 2B). The data content of the MSL and the instructions for completion are summarized below.

a. The MSL shall contain the following information:

(1) TCN. Enter the 17-character (alphanumeric) TCN using a 0.5 inch (12.7 mm) high linear (Code 39) bar code with human-readable interpretation as the uppermost bar code on the top of the label. For consolidated shipments, place a lead TCN in this block. The lead TCN shall not duplicate any internally packed TCNs.

(2) Transportation Account Code (TAC)/Postage. Enter the TAC or the postage data. For other than mail shipments, enter the TAC applicable to shipments moving from POE to POD, otherwise leave blank. For mail shipments, use one of the following:

(a) For metered mail, attach the stick-on metered postage values to or near this block. Do not apply over text or bar codes.

(b) For permit imprint mail, enter the appropriate Service/agency mail authorization.

Example: First Class Mail
Postage and Fees Paid
Defense Logistics Agency
Permit No. G-53

(3) From. Enter the Consignor DODAAC/CAGE and in-the-clear address (up to 3 lines of 35 characters) of the shipping activity. For mail include the ZIP code.

(4) Type Service. In-the-clear text (for example, Frt LTL, Air Expss, Expss Mail, TGBL UB, DPM HHG) for the type of transportation service to the "Ship To" address. The in-the-clear text may be derived from the TCMD

Source: https://assist.dla.mil -- Downloaded: 2016-10-21T11:13Z
Check the source to verify that this is the current version before use.

mode/method code for the generic MSL. Should be blank for unit move shipments.

(5) Ship to/POE. Enter an in-the-clear ship to address (three characters and five lines of up to 35 characters) or, if applicable, enter the three-digit air/water port of embarkation (POE) code (from DTR 4500.9-R, Part II, Appendix CC or MM) and its ship to address. A POE code is not required for shipments to a DLA CCP.

(6) Priority. Enter the applicable transportation priority (TP). TP 1, 2, 3, or 4 (deferred air freight) should be clearly identified in the priority block of the MSL using bold text that is 0.75 inch (19.1 mm) high. Should be blank for unit move shipments.

(7) POD. Enter three-digit air/water port of debarkation (POD) designator (from DTR 4500.9-R, Part II, Appendix CC or MM), if applicable. In-the-clear location name may be included. Blank for classified unit move shipments. Blank for mail shipments.

(8) Project Code. Enter project code, if applicable.

(9) Ultimate Consignee/Mark For Consignee. Enter the in-the-clear complete address(s) (up to five lines of 35 characters) and the 0.5 inch (12.7 mm) high linear (Code 39) bar code for the applicable DODAAC or MAPAC, with human-readable interpretation. Blank for classified unit move.

(10) Weight (lbs). Enter actual gross weight (numeric value of this piece). Round to next whole digit and do not zero fill.

(11) RDD. Enter the required delivery date (RDD) code specified by the requisitioner, if appropriate. Blank for classified unit move.

(12) Cube (ft). Enter the actual cube (numeric value of this piece). Round to next whole digit and do not zero fill.

(13) Charges. No known requirement. Leave Blank.

(14) Date Shipped. Enter an in-the-clear date (for example YDDD, YYYYDDD, or DD-MMM-YYYY). Blank for unit move. Do not use the date shipped code from DTR 4500.9-R, Part II, Appendix RR.

(15) FMS Case Number. Enter FMS case identifier as appropriate. Blank for unit move.

(16) Piece Number. Enter the piece number (numeric value assigned to this piece) of the cargo documented by the TCN for this shipment unit and a

Source: https://assist.dla.mil -- Downloaded: 2016-10-21T11:13Z
Check the source to verify that this is the current version before use.

0.5 inch (12.7 mm) high linear (Code 39) bar code. Do not zero fill. Piece number may be expressed as "Piece Number of Total Pieces" to save space on the label – only the piece number has a linear (Code 39) bar code; the word "of" and the total number of pieces are not shown in the linear (Code 39) bar code.

(17) Total Pieces. Total number (numeric value) of pieces documented by the TCN for this shipment unit. Total pieces may be expressed as "Piece Number of Total Pieces" to save space on the label – the total pieces value is not shown in the piece number linear (Code 39) bar code. Do not zero fill.

(18) 2D (PDF417) bar code. Includes MSL in-the-clear text data, selected TCMD data, and selected supply/unit information per 5.2.2.6. For unit moves only, when the item has been assigned a UII, the UII shall be included in the 2D (PDF417) bar code.

b. For unit moves, in addition to the requirements in 5.2.2.6, data for the following elements, as applicable, shall be shown on the MSL:

(1) Unit line number (ULN).

(2) Length, width, height (this piece).

(3) Unit identification code (UIC).

(4) Commodity/special handling code (air or water).

(5) Vehicle serial number.

(6) Equipment description.

(7) Bumper number (Army/Navy only).

(8) Model number (Army/Navy only).

(9) Unique item identifier (UII) – only encode the UII in the 2D (PDF417) bar code.

(10) Transportation tracking number (TTN) – only encode in the 2D (PDF417) bar code when the TTN is available for system entry – typed entry of TTN data by a user is not permitted.

c. Additional information. Optional marking includes equipment serial number, NSN, and commercial tracking number and/or bar code.

Source: https://assist.dla.mil -- Downloaded: 2016-10-21T11:13Z
Check the source to verify that this is the current version before use.

d. Local Processing Data. Shippers may add local internal processing information to the label, such as DLA distribution information, as long as it is clearly marked and does not interfere with the orientation and placement of MSL data. Additional data may be required by the contract or added based on trade agreements.

5.2.2.6 MSL 2D (PDF417) bar code requirements. Each MSL 2D (PDF417) bar code shall contain the data elements from the applicable table in Appendix A for encoding MSL text, TCMD data, and supply line item information.

a. The data elements include MSL information, TCMD data, and the respective TCMD trailer data (T_5 through T_9) for the labeled shipment unit, and the line item contents of the single shipment unit for a generic MSL (i.e., for other than unit move documented cargo (DTR 4500.9-R Part III) or personal property documented cargo (DTR 4500.9-R Part IV). Table A-I provides data descriptions, format, and data sources for the ANSI MH10.8.2 DIs used in the 2D (PDF417) bar code and for the data element identifiers (DEI) that identify DoD unique data elements from DTR 4500.9-R and DLM 4000.25-1. Tables A-II and A-III in this standard provide the content of the data streams for generic MSLs and unit move MSLs.

b. All shipment unit data and line item data in the MSL 2D (PDF417) bar code replicates data from the three sources noted below. If the data is available and a corresponding DI or DEI is shown in the applicable Table A-II or A-III, the data shall be entered into the 2D (PDF417) bar code. Blank data fields are not to be encoded except as noted in Appendix A, A.2.3.h.(1). When multiple sources for a data element are identified, the sources are prioritized as follows (TCMD source has priority if it exists):

(1) Source 1: Header TCMD data. Format 07 DEI '34' (Table A-I) shall be used to identify the document identifier code of header TCMD data being documented in the 2D (PDF417) bar code. The unit move transportation tracking number (TTN) is included with this source category.

(2) Source 2: Supply documentation (DD Form 1348-1A) bar code data or contract data to include IUID information, as applicable, for each supply line item packaged within the shipment unit.

(3) Source 3: Shipment information entered in-the-clear on the MSL.

c. The MSL 2D (PDF417) bar code can only contain limited amounts of data (about 1,000 characters). The following factors shall be considered when determining the amount of available data to record in the 2D (PDF417) bar code.

(1) A consolidated shipment unit containing multiple internal shipment units shall be documented by encoding only the header TCMD data and its respective trailer TCMD information. The MSL 2D (PDF417) bar code shall not be populated with TCMD information from the internal shipment units. Each shipment unit in a unitized shipment shall be marked with an MSL. The MSL 2D (PDF417) bar code does not contain enough capability

Source: https://assist.dla.mil -- Downloaded: 2016-10-21T11:13Z
Check the source to verify that this is the current version before use.

to consistently record the internal shipment unit prime TCMD data and the respective trailer data.

(2) The 2D (PDF417) bar code for a consolidated shipment unit of multiple shipment units, or a mix of line items and multiple shipment units, shall not contain any line item information and shall be marked with an in-the-clear text message that shall be entered at the bottom of the 2D (PDF417) bar code stating "NO LINE ITEM DATA" and it shall be entered into the Format 07 DEI '35' (text comment) area of the MSL 2D (PDF417) bar code for reprinting purposes. If line item data is still desired for a shipment, it should be included on an alternate form of high capacity AIT media.

(3) It may not be possible to document the supply line items of an entire multipack or consolidated shipment. If the AIT media cannot store all of the line item data required to document the shipment unit, the line item information shall be eliminated from the 2D (PDF417) bar code. An in-the-clear text message shall be entered at the bottom of the 2D (PDF417) bar code stating "NO LINE ITEM DATA" and it shall be entered into the Format 07 DEI '35' (text comment) area of the MSL 2D (PDF417) bar code for reprinting purposes.

(4) In order to provide space for multiple line item supply data in the 2D (PDF417) bar code of the generic MSL, the in-the-clear address data shall only be printed in the 2D (PDF417) bar code of a generic MSL for single line item shipments or when no line item data is printed in the bar code. Most multi-piece shipments derive from a single line item document; therefore, the addressing data will usually be available in the 2D (PDF417) bar code for reprinting MSLs when a transshipper needs to split a multi-piece shipment. The in-the-clear address data should be printed in the 2D (PDF417) bar code of the MSL after giving encode priority to the TCMD and TTN information in the 2D (PDF417) bar code.

d. Metric units of measure may be used in the 2D (PDF417) bar code for selected DIs/DEIs as noted in Table A-I. Metric units of measure shall not be used for in-the-clear text entries.

5.2.2.7 MSL bar code printing standards (see Figures 2A and 2B). The three linear (Code 39) bar codes and 2D (PDF417) bar code shall be printed in accordance with this standard with reference to ANSI MH10.8.1, ISO/IEC 16388, and ISO/IEC 15438 for further explanation. ISO/IEC 15416 defines print quality for linear bar codes. ISO/IEC 15415 defines print quality for two-dimensional bar codes. Printed bar codes shall conform to "B" quality standards as defined in the appropriate standard. The requirements are summarized as follows:

a. Linear (Code 39) bar codes.

(1) The minimum bar height shall be 0.5 inch (12.7 mm).

Source: https://assist.dla.mil -- Downloaded: 2016-10-21T11:13Z
Check the source to verify that this is the current version before use.

(2) The minimum narrow element dimension (X-dimension) shall not be less than 0.01 inch (0.25 mm).

(3) The wide to narrow ratio of the elements should be 3:1. The measured ratio shall be between 2.4:1 and 3.2:1.

(4) The leading and trailing quiet zones shall be not less than 0.25 inch (6.35 mm).

(5) The linear (Code 39) bar codes should be presented on shipment units with the bar codes horizontal (picket fence orientation). See 5.3.2.4 for cylinder applications.

(6) The label should be designed so that two bar codes are not next to each other unless the label is wide enough to reduce the possibility of interference with successful bar code scanning.

(7) The quality of the printed bar code shall meet a grade requirement of 2.5 (B) at the point of production when measured in accordance with ISO/IEC 15416 with a measurement aperture of 0.010 inch (10 mils or 0.25 mm) and an inspection wavelength of 660 ± 10 nm.

(8) To encode the information, only the Code 39 basic character set (A-Z 0-9 $ and the start/stop character[*]) shall be used in accordance with ISO/IEC 16388.

b. 2D (PDF417) bar code. For technical details, see Appendix A.

5.2.2.8 Human-readable interpretation. The human-readable interpretation for each of the linear (Code 39) bar codes should appear above, below, or in line with the linear bar code. When in line, a 0.25 inch (6.35 mm) quiet zone shall be provided.

5.2.3 DoD shipments sent through the U.S. Postal Service and commercial parcel services. Shipments originated by DoD activities and sent through the U.S. Postal Service or a commercial parcel service shall comply with the U.S. Postal Service domestic mail and commercial carrier requirements in addition to the requirements of this standard.

5.3 Placement of identification text (for ammo/explosives – see 5.14) and address marking.

5.3.1 Placement of identification text marking on unit packs and intermediate containers (see Figure 1). Identification text marking on unit packs and intermediate containers shall be so located as to allow the marking to be easily read and to ensure that the marking will not be destroyed when the pack or container is opened for inspection or until its contents have been used. The marking surface of a unit pack shall be the outermost wrap, bag, or container of the

Source: https://assist.dla.mil -- Downloaded: 2016-10-21T11:13Z
Check the source to verify that this is the current version before use.

unit pack. When a barrier bag is used within another unit container, both the bag and the outermost container shall be marked. Bundled items should be marked with a tag or by affixing a label under one of the bundled ties. The required marking should be placed so that it is not obscured by any strapping or closure tape.

5.3.2 Placement of identification text and address marking on exterior shipping containers, palletized unit loads, and unpacked items (see Figures 3 thru 14).

a. The exact location of the identification text marking may vary slightly. The marking shall be applied to the upper left two-thirds of the side of the container or palletized unit load having the greatest overall, usable marking surface. Specific requirements for the placement of the identification text marking on various containers, palletized unit loads, and unpacked items are discussed in the following paragraphs. The required marking shall not be obscured by cleats, strapping, or closure tape. Unless otherwise specified in the contract or solicitation or when required by the carrier, such as parcel post, one end and the top and bottom of every exterior container or palletized unit load shall be free of identification marking. Marking materials used shall meet the requirements specified in section 5. Unless otherwise specified by the cognizant activity, the size of the identification text marking lettering shall be as specified in 4.2.8.

b. Address labels should be affixed at a suitable location where there is minimum risk of damage and in accordance with the provisions of 5.3.2. For RFID-enabled address labels, see Passive RFID tag placement. If a label location is not specifically identified in this standard, shippers are referred to ANSI MH10.8.1 for additional guidance.

(1) Required address marking shall be placed on the identification-marked side of exterior shipping containers. If a container is too small to accommodate the address marking on the identification-marked side, the address marking/label shall be applied on the opposite side or attached to a shipping tag (see 4.2.3) or marking board/panel (see 4.2.7). When the surface of the shipping container or material such as pipe, steel, or wood does not lend itself to direct application of the MSL, or the MSL obscures other required marking on a shipping container, the label shall be attached to a shipping tag, marking board or marking panel. The tag shall be large enough to accommodate the label without folding. Separate tags shall be used for identification and address marking.

(2) Stencil marking alone is not an appropriate alternative for address marking of shipments because stenciling cannot accommodate the bar code requirements.

5.3.2.1 Boxes and crates. See Figure 3.

a. Boxes and crates 10 cubic feet and over shall have additional identification marking placed on the end of the container to the left of the identification-marked side. Placement of identification marking on the end of boxes and crates under 10 cubic feet is optional.

Source: https://assist.dla.mil -- Downloaded: 2016-10-21T11:13Z
Check the source to verify that this is the current version before use.

Regardless of size, identification text marking may be stenciled or printed directly on the container or applied by use of a stenciled or preprinted label. If no other adequate marking surface is available, cleats may be used as part of the marking surface. If the exterior surface is not suitable for direct marking application, a marking board/panel may be used.

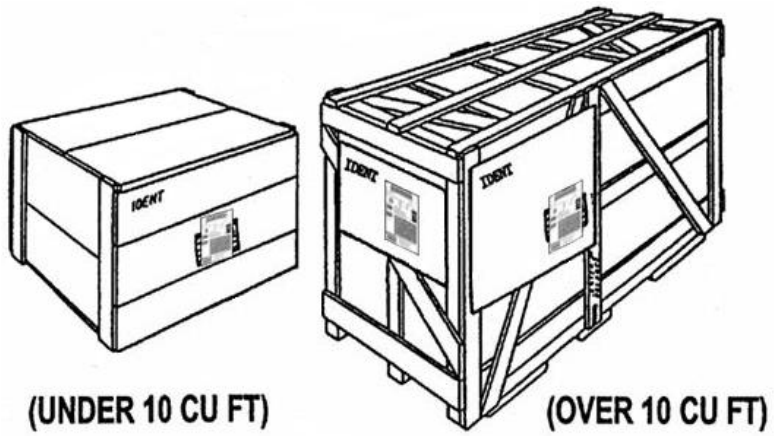

NOTE: For identification bar code specific marking locations, see Figures 21 and 22.

FIGURE 3. Placement of identification and address marking on boxes and crates.

b. The address label shall be placed on the identification-marked side and right of center on a vertical face, allowing a minimum of 2 inches (5 cm) from all edges of the box or crate. An additional address label may be placed on the identification-marked end for styles which, because of their configuration, allow access by materials handling equipment only to the end of the container.

5.3.2.2 Bales and cloth-covered bundles (see Figure 4). The identification text marking on bales shall be stenciled on the upper two-thirds of the side of the bale having the largest marking surface area. Bales with a pre-sewn end and a wire-tied ear on the opposite end shall have the NSN, quantity, and UI applied on the pre-sewn end. When both ends have wire-tied ears, no identification marking shall be applied on the ends. On cloth-covered bundles, identification text marking shall be stenciled on the upper two-thirds of the side of the bundle as close to the left side as possible. When direct stenciling is used, there is no need to coat the cloth, provided the marking does not become smeared or illegible because of any absorption into the cloth. To ensure that the marking is both permanent and readable, the cloth bundle may be given a smooth coat of sand-colored lacquer, enamel, or paint over the area to be marked before the marking is applied. When stenciling is not appropriate for bales or cloth-covered bundles, preprinted labels or tags may be used. Address labels for bales and bundles shall be applied to the lower two-thirds of the identification-marked side or to the wire-tied ear with a tag.

Source: https://assist.dla.mil -- Downloaded: 2016-10-21T11:13Z
Check the source to verify that this is the current version before use.

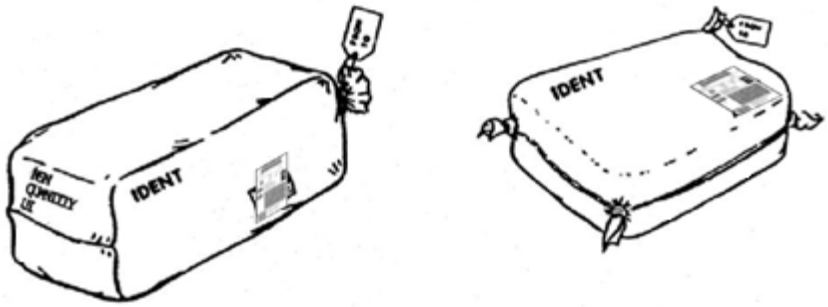

NOTE: For identification bar code specific marking locations, see Figure 23.

FIGURE 4. Placement of identification and address marking on bales and cloth-covered bundles.

5.3.2.3 Paper shipping sacks, bags, and textile/laminated textile bags (see Figure 5). Identification text marking shall be printed or stenciled on the side of the sack or bag that does not bear the certificate of compliance of the sack manufacturer. Commercially packed commodities shall have the required marking stenciled and centered on one face of the sack or bag. When the printing area is too small, spacing of the printing may be altered proportionately and lines may be consolidated. If the stenciled marking is not legible, it shall be machine printed on a tag or label. If a bag is closed by stitching, an identification tag (not an address label) may be fastened to the bag by stitching at the time of closure. If the top of a bag has ears, the appropriate tag shall be affixed to one of the ears. Address marking shall be placed on a label or tag. When a label is used, it shall be applied below the identification marking. If the bag is closed by stitching, a tag may be fastened to the bag by stitching when closure is made. If the top of the bag has ears, the tag shall be affixed to one of the ears.

NOTE: For identification bar code specific marking locations, see Figure 23.

FIGURE 5. Placement of identification and address marking on sacks and bags.

Source: https://assist.dla.mil -- Downloaded: 2016-10-21T11:13Z
Check the source to verify that this is the current version before use.

5.3.2.4 Barrels, drums, and other cylindrical containers (including empty containers) (see Figure 6). Identification text marking shall be stenciled or preprinted on the upper one-third of filled barrels, pails, kegs, drums, and reusable metal containers. In addition to the required marking on 50- and 55-gallon drums or barrels with non-removable heads, identification data (less weight) and shelf-life marking shall also be shown on the head. Forest-green containers shall be marked with yellow or white lettering. Although the preferred methods of application are stenciling and preprinting, labels or tags may be used when a container is too small for either method. However, unless otherwise approved by the cognizant activity, labels or tags shall not be used for identification text marking on metal containers, unless the containers are too small to accommodate the stenciled or preprinted marking. Also, if labels are used for marking, only pressure-sensitive labels shall be used on cylindrical containers and metal drums. Marking shall be avoided in the space 6 inches (15.2 cm) above or below the centerline of the body sidewall for barrels not swaged with rolling hoops. On empty barrels, drums, and cylindrical containers, identification marking shall be applied on the top and on the upper one-third of the side by attaching labels or tags. The preferred location for the address label is on the middle one-third of the identification marked side of the container, except for barrels not swaged with rolling hoops. However, if space is not available in this location, the address label shall be placed in a conspicuous location in close proximity to the identification marking. A flat surface of the container is preferred to accommodate scanning of the 2D (PDF417) and linear (Code 39) bar codes. If space is not available on the surface of the container for the address label, the label shall be placed on a shipping tag.

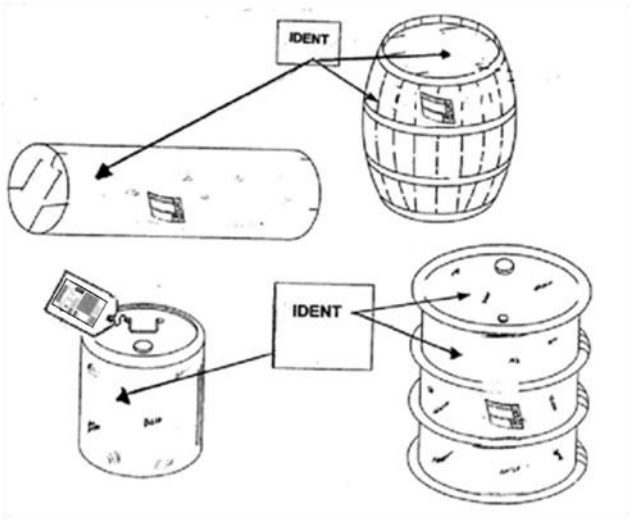

NOTE: For identification bar code specific marking locations, see Figure 24.

FIGURE 6. Placement of identification and address marking on barrels, drums, and other cylindrical containers.

5.3.2.5 Miscellaneous articles and unpacked items such as spools, reels, rods, coils of wire and cable, and paper- and cloth-wrapped rolls (see Figure 7). Identification marking shall be applied on two tags securely attached to items such as rods and bars. One of the tags shall be

Source: https://assist.dla.mil -- Downloaded: 2016-10-21T11:13Z
Check the source to verify that this is the current version before use.

bound to the item with burlap or other suitable covering, with each end of the cover securely fastened. The other tag shall be securely attached to the item with a wire or twine (see 4.2.3). On reels or spools of cable and wire, identification text marking shall be stenciled on the side of the reel or spool. When this area does not permit stenciling, marking may be applied by using a label. On coils of wire, identification marking shall be applied on two tags securely attached to the coil. On paper- and cloth-wrapped rolls, identification text marking shall be applied by stenciling, printing, or labeling. Prior to stenciling cloth-wrapped rolls, the marking area shall be given a smooth coating of sand-colored lacquer, enamel, or paint. One end of wrapped rolls shall contain NSN, quantity, and UI marking. Address marking shall be applied to these types of miscellaneous articles and unpacked items by using labels on flat areas or on tags as shown.

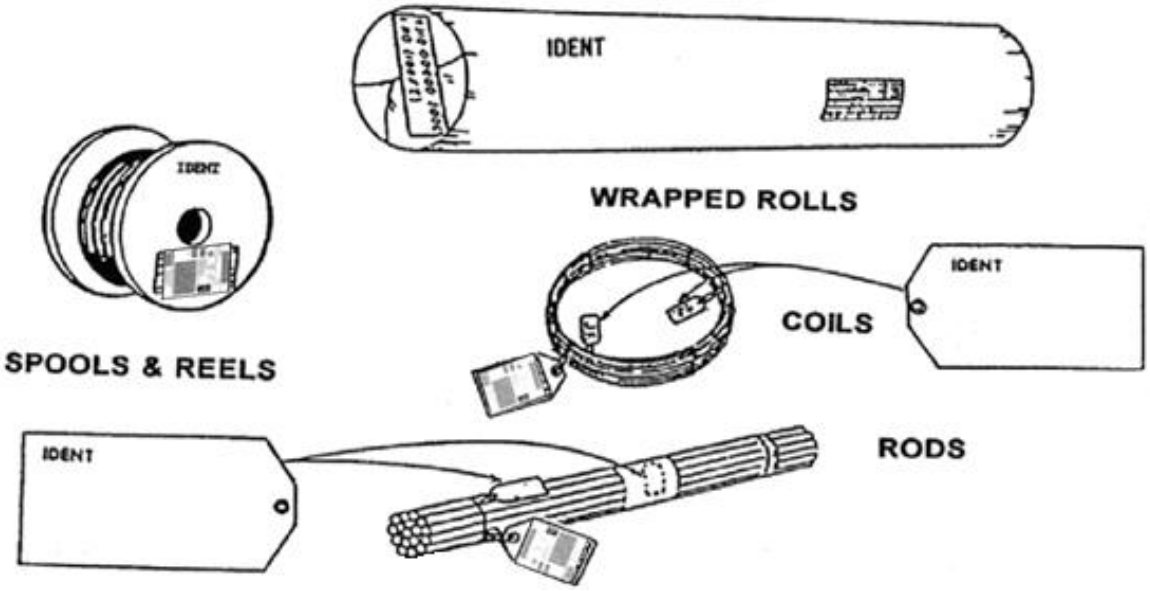

NOTE: For identification bar code specific marking locations, see Figures 23 and 25.

FIGURE 7. Placement of identification and address marking on miscellaneous articles and unpacked items.

5.3.2.6 Unpacked major equipment (except unpacked vehicles) (see Figure 8). Identification text marking shall be either stenciled on a marking board/panel applied to the most suitable location on the item, or they shall be printed on a label attached directly on the equipment's surface. Address marking shall be applied by using labels applied to the marking board or attached to the equipment's surface. Labels (identification or address) shall be attached to the equipment's surface with ASTM D5486/D5486M, type I, class 2 tape. The tape shall be placed over the label and shall extend 0.05 inch (1.27 mm) or more from its edges. For unpacked vehicle marking requirements, see 5.3.2.9.

Source: https://assist.dla.mil -- Downloaded: 2016-10-21T11:13Z
Check the source to verify that this is the current version before use.

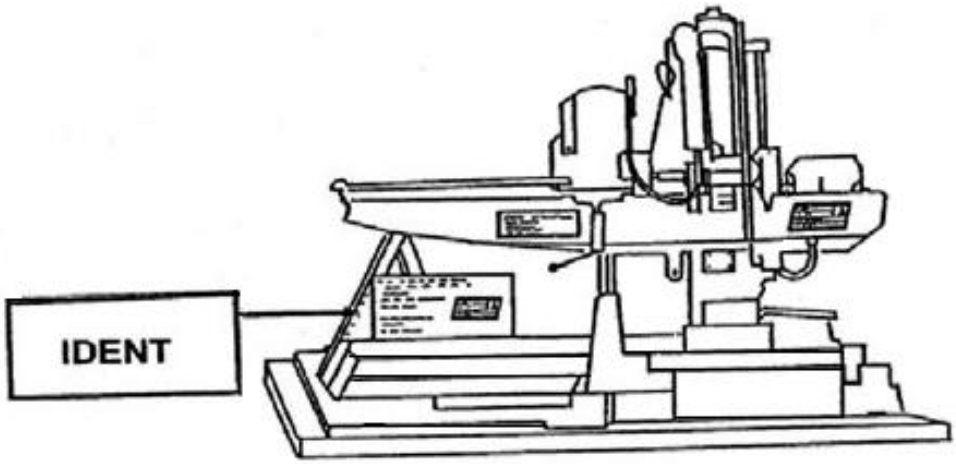

FIGURE 8. Placement of identification and address marking on unpacked major equipment.

5.3.2.7 Palletized unit load (see Figure 9). When a palletized unit load of containers or items is formed, the individual containers/items comprising the unitized load shall be marked with exterior container identification marks or unpacked item marks. Unless otherwise specified, unit loads of box-packed items shall have one or more boxes turned to present a blank surface for marking. The palletized unit load shall have the identification and address marking applied as specified herein and as shown in Figure 9. For palletized unit loads 10 cubic feet and over, additional identification marking shall be placed on the end of the load adjacent to the identification-marked side. When a fiberboard container such as a triple-wall fiberboard box is used for unitizing a load in lieu of palletization, all required marking, including the address label, may be placed directly on the flat fiberboard surface. Unitized tires shall be stacked on pallets, sidewall to sidewall, to prevent the marking on individual tires from being seen around the circumference of the load. The gross weight for palletized/containerized unit loads shall include the weight of the pallet or container base. Because palletized loads are often stacked two or three high when shipped or stored, the marking shall be large enough to be read from a distance. The size of the lettering (see 4.2.8) shall be proportionate to the overall size of the unitized load but shall be not less than 0.75 inch (19.1 mm) in height. A loaded 463L System pallet is not considered to be a palletized unit load for marking of identification information in accordance with this standard. A loaded 463L System pallet is documented for movement as specified in Defense Transportation Regulation, DTR 4500.9-R, Part II, Chapter 203.

a. Identification marking (see 5.1.2) shall be placed on a marking board or panel, securely attached to two adjacent sides of the palletized load, by using a label or by direct stenciling. Palletized loads with smooth, flat surfaces may have identification text marking stenciled directly on two surfaces, with the marking extending from one container to another.

b. Except for DLA Troop Support C&T items, a palletized load of containers of items having different NSNs shall be marked as a “MULTIPACK” (see 5.1.2.1.b). Palletized loads of DLA Troop Support C&T items having different NSNs shall be marked as specified in the contract or order.

Source: https://assist.dla.mil -- Downloaded: 2016-10-21T11:13Z
Check the source to verify that this is the current version before use.

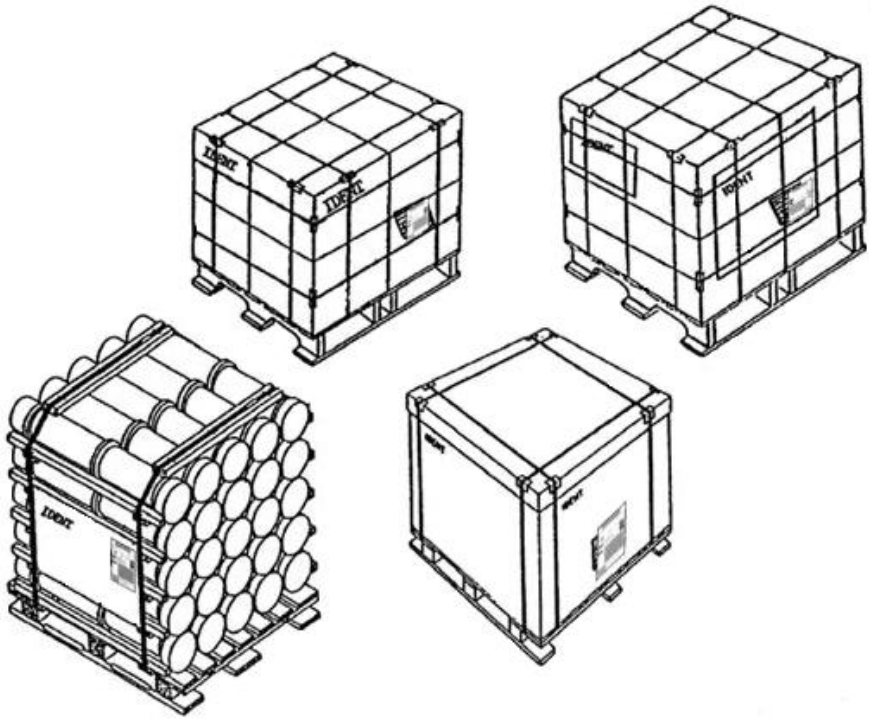

NOTE: For identification bar code specific marking locations, see Figure 25.

FIGURE 9. Placement of identification and address marking on palletized unit loads.

c. When a palletized load is covered with stretch-wrap film, pressure-sensitive labels containing the identification and address marking may be placed on the outermost layer of wrap, on either side of the load in addition to other marking requirements. Variations are authorized based on local operations and capabilities (for example, a marking board/panel positioned on the pallet before the last layer of wrap is applied).

d. The address label(s) attached directly to a container on the pallet or to a marking board or panel shall be positioned as follows:

(1) The address label shall be placed right of center on a vertical face, allowing a minimum of 2 inches (5 cm) from all edges of the unit load.

(2) The bottom edge of the address label containing the unit load information should be within the range of 32 to 48 inches (81 to 122 cm) from the bottom of the pallet. If the loaded pallet is less than 40 inches (102 cm) in height, the label should be placed as high as possible on the pallet, but not closer than 2 inches (5 cm) to the natural top of the unit load.

e. A DoD shipment packaged in an overpack enclosure (palletized unit load) for convenience of handling during transportation is exempt from identification marking under the following conditions: the overpack enclosure is not an assorted-items pack (see 5.1.2.1), the cargo is non-hazardous, the unpacked items or containers within the overpack enclosure are

Source: https://assist.dla.mil -- Downloaded: 2016-10-21T11:13Z
Check the source to verify that this is the current version before use.

marked/tagged with identification information in accordance with this standard, and the overpack enclosure is not intended for storage at destination.

5.3.2.8 Wood products. Identification marking shall consist of the NSN and contract data only. If the NSN is not available, the item description as cited in the contract (e.g., door, wood, exterior, etc.) shall be used. Identification text marking shall be applied by stenciling the most suitable area. Address marking shall be applied by labeling or tagging. When wood products are shipped on a single conveyance to more than one consignee, address marking shall be provided on each shipment unit.

5.3.2.8.1 Bundled wood products (see Figure 10). When identification text marking is applied by stenciling, it shall be placed directly on the side of the bundle. If the area does not permit stenciling, two or more identification tags may be attached to the bundle. Identification text marking may also be stenciled directly on a marking board/panel or may be applied by using a stenciled label. When a marking board/panel is used, it shall be securely fastened to the bundle. Fiberboard shall not be used as a marking board/panel for bundled wood products. However, wood or wood-based panels may be used as marking boards/panels for bundled wood pallets. In addition to the NSN and contract number, OCONUS shipments of bundled wood products require address marking. For wrapped bundles of wood products, the address label may be applied directly below the identification marking. For unwrapped bundles, the address label may be attached to a shipping tag or marking board secured to the bundled unit (stenciling is only permitted for text characters). Prior to shipment, a transparent, waterproof laminate shall be placed over the address label, if the label is not weather resistant (see 4.2.1 and 4.2.2).

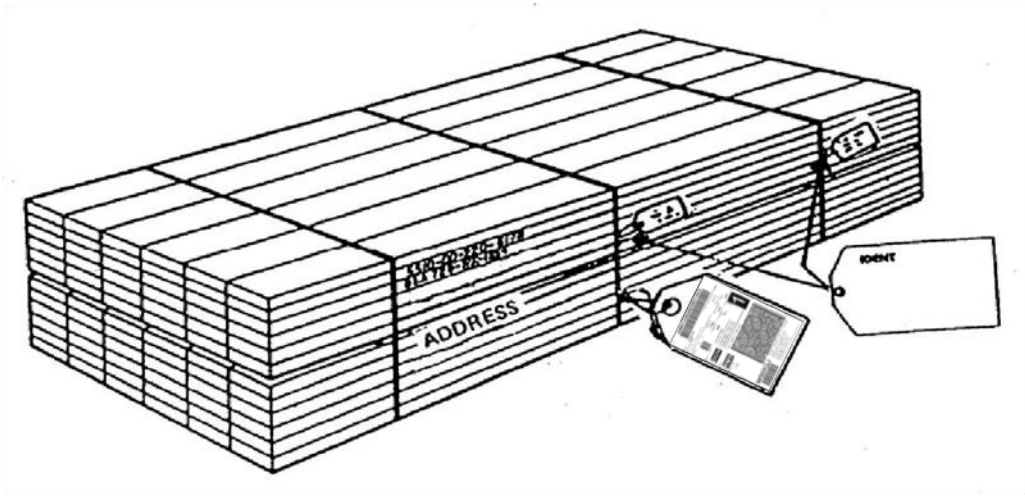

FIGURE 10. Placement of identification and address marking on bundled wood products.

5.3.2.8.2 Unstrapped (loose) wood products (piles, poles, etc.) (see Figure 11). Identification text marking shall be applied by either stenciling or tagging. If tags are used, they shall be securely attached to the unstrapped (loose) pieces. Metal or plastic tags may be used when authorized by the procuring activity. At least 10 percent of the total pieces in a single

Source: https://assist.dla.mil -- Downloaded: 2016-10-21T11:13Z
Check the source to verify that this is the current version before use.

shipment shall be marked. Address marking shall be affixed on the side of the load by labeling on a marking board or tag (stenciling is only permitted for text characters). For materiel such as poles and ties that is preservative-treated with oil solutions, stenciling shall be accomplished with aluminum-leaf paint.

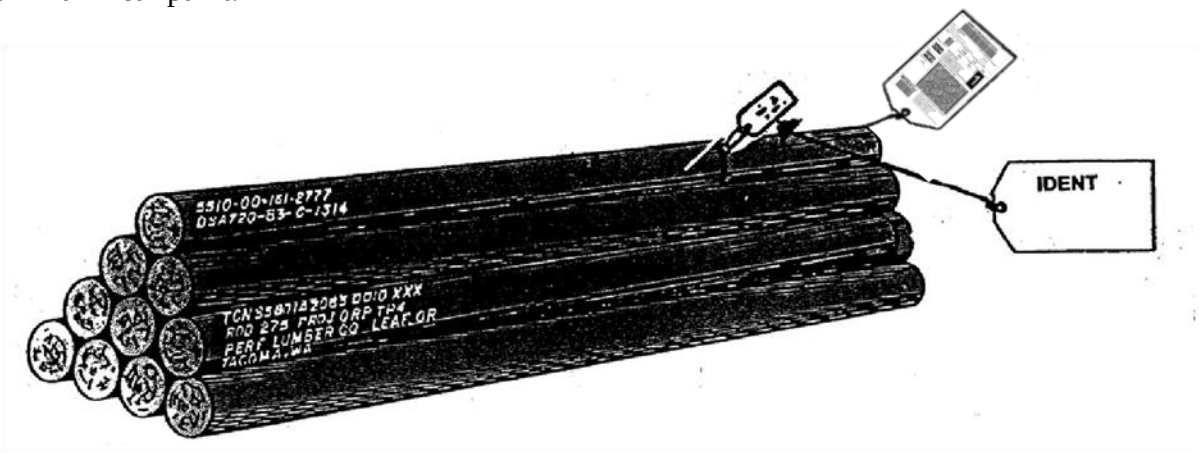

FIGURE 11. Placement of identification and address marking on unstrapped (loose) wood products.

5.3.2.8.3 Miscellaneous wood products in containers (doors, windows, and moldings) (see Figure 12). Identification text marking shall be applied by stenciling or labeling. Address marking shall be applied to the identification-marked side of the container.

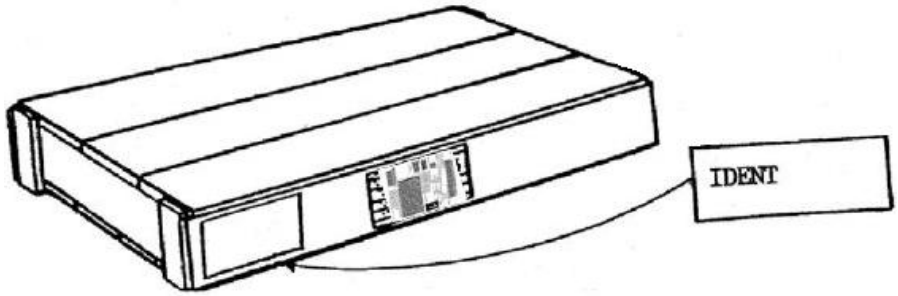

FIGURE 12. Placement of identification and address marking on miscellaneous wood products in containers.

5.3.2.9 Unpacked vehicles (see Figure 13). Identification marking is not required on unpacked vehicles that are shipped within CONUS. Address marking is not required on driveaway, truckaway, railaway, or towaway shipments within CONUS. The address marking of vehicles for unit move shipments shall be in accordance with the applicable regulations of the military department involved as required by DTR 4500.9-R. For other than unit moves, the address marking for CONUS shipments and the identification and address labels for OCONUS vehicle shipments shall be applied to a marking board/panel or applied by attaching a preprinted label on the vehicle's surface with ASTM D5486/D5486M, type I, class 2 tape. When the address label is attached directly to the surface of the vehicle, the label shall be placed either on

Source: https://assist.dla.mil -- Downloaded: 2016-10-21T11:13Z
Check the source to verify that this is the current version before use.

the rear of the vehicle or on the right side (passenger side) near the rear of the vehicle. When marking boards/panels are used, they shall be secured on the front of the vehicle. When possible, the marking shall be positioned on the vehicle at a height of not more than 6 feet or less than 4 feet. When the use of these locations is not practicable, the best alternate location shall be selected.

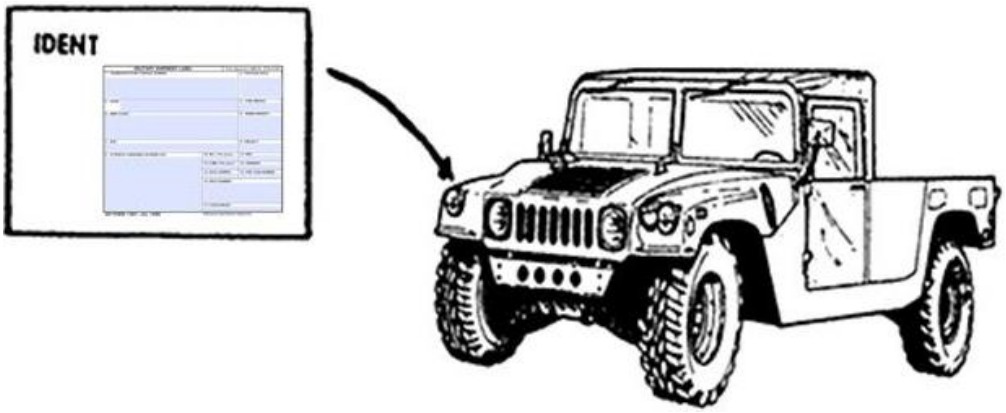

NOTE: The figure shows a DD Form 1387 (Military Shipment Label) used in lieu of a bar coded MSL for DoD contingency operations where manual entry is the only means available to document DTS shipments.

FIGURE 13. Placement of identification and address marking on a marking board for an unpacked vehicle.

5.3.2.10 Commercial-owned or Government-owned (or leased) shipping containers (SEAVAN) (see Figure 14). Exterior container identification marking shall not be placed on the outside of a SEAVAN. A completed MSL shall be attached to the seal on the SEAVAN or shall be attached at the rear of each SEAVAN. As per DTR direction, all individual shipment units documented with a TCN, including multiple shipment units inside a consolidation container, shall be marked with an MSL to facilitate DTS movement, in-transit visibility, and in-check/receipt processing. Unit packs, containers, palletized unit loads, and unpacked items do not require individual address marking or address bar code marks if they are all unitized by the shipper of origin into one single shipment unit and loaded into a SEAVAN for delivery as a complete container load to the ultimate consignee of the single shipment unit – however, the Transportation Control Movement Document (TCMD) TCN for the single shipment unit inside the van will be different from the TCN for the SEAVAN. CCP activities which receive shipments for consolidation are not required to obliterate address labels applied by the shipper of origin or to re-label the consolidated shipment units.

Source: https://assist.dla.mil -- Downloaded: 2016-10-21T11:13Z
Check the source to verify that this is the current version before use.

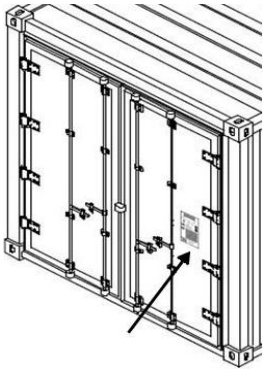

FIGURE 14. Placement of address marking (MSL on a SEAVAN).

5.3.2.11 Full rail carload and full truckload shipments. Full rail carload and full truckload shipments moving as a single shipment unit from a single consignor to a single consignee require at least one completed MSL be attached to the container, palletized unit load, or unpacked item located closest to the door. Additional MSLs may be placed on other containers, palletized unit loads, or unpacked items in the shipment.

5.3.2.12 Less than rail carload and less than truckload (LTL) shipments. An MSL is required on shipping containers, palletized unit loads, and unpacked items for less than rail carload and LTL lots. Exterior container marking is not required on the train car or truck.

5.3.2.13 Tires (loose). Identification or address marking on tires shall be placed on tags affixed to the tires with twine or by labels affixed to the outside sidewall or on the tire tread. Labels with rubber based adhesives such as those conforming to MIL-PRF-61002, Type Optional, Grade A, Style 3-Rubber, Composition (b) (laminated) shall be used. In addition to the required identification marking, tires shall be marked with the cure date and the expiration or inspect/test date (choose one). Tires requiring Department of Transportation (DOT) marking molded into the sidewall do not require the cure date to be marked since the last three digits of the DOT marking indicate the week and year of the manufacture of the tire (cure date). Only the expiration or inspect/test date (choose one) is required. Bar code marking required for exterior containers (see 5.4.1.2) shall be applied to all tires or a label. An MSL shall be affixed to a shipping tag or it shall be affixed directly to the tire. Additional guidance on the marking of tires is contained in MIL-DTL-4.

5.3.2.14 Tubular products (loose). Identification marking shall be applied by labels or weather-resistant tags. Plastic or metal tags may be used when authorized by the procuring activity. The address label shall be affixed to a flat surface on the side of the load or to a tag.

5.3.2.15 Tubular products (bundles and lifts). Two weather-resistant tags containing the identification marking shall be applied to 10 percent of the load. Plastic or metal tags may be used when authorized by the procuring activity. Identification text marking may also be stenciled or labeled on a marking board/panel, which shall be attached to the load by

Source: https://assist.dla.mil -- Downloaded: 2016-10-21T11:13Z
Check the source to verify that this is the current version before use.

ASTM D5486/D5486M, type I, class 2 tape or metal bands as specified in ASTM D3953 (used with ASTM D4675). The address label shall be affixed to a flat surface on the side of the load or on the marking board/panel.

5.4 Identification bar code marking (for ammo/explosives – see 5.14) (see Figure 1 and 25). For single line item packaging and marking (for example one NSN with a quantity of one or more), identification bar codes (2D (PDF417) and/or linear (Code 39) with human-readable interpretation), as applicable, are required for DoD and contractor- or vendor-originated shipments, unless specifically exempted in the contract. See 5.4.1.3 for assorted-item packaging requirements.

NOTE: A loaded RORO trailer/vehicle, loaded SEAVAN, loaded 463L pallet, or other unitized load documented as a shipment unit consolidation in accordance with DTR 4500.9-R Part II Appendix M or unit move cargo documented in accordance with DTR 4500.9-R Part III are exempt from the identification marking requirements in this standard.

a. For identification marking of other than UII information, a 2D (PDF417) bar code(s) and/or linear (Code 39) bar codes shall be used on unpacked items, unit packs, intermediate and exterior containers, and palletized unit loads. Use of the 2D (PDF417) bar code is preferred.

b. For identification marking of UII information, the 2D (PDF417) bar code(s) shall be used for listing UIIs (DI '25S') and the data normally included in the linear (Code 39) identification bar codes (see 5.4.1.1.2 and 5.4.1.2.2). For UII identified items, ISO/IEC 15434 Format 06 envelopes (see Appendix A) shall be used in the 2D (PDF417) bar code to associate item-specific data (e.g. UII, a serial number, and other data such as manufacturer, lot number, etc.) for uniquely identified items.

c. Identification text marking and 2D (PDF417) identification bar code marking requirements for ammunition containers are specified in 5.14.

d. Information and illustrations on the content of identification bar code marking on containers, palletized unit loads, and unpacked items of non-ammunition commodities are in 5.4.1.1 thru 5.4.5.13.

5.4.1 Bar code data content specifications (non-ammunition).

NOTE: Bar code requirements for container UII/serial number list requirements are in 5.4.1.2.1. Bar code marking requirements for the MSL are in 5.2.2.6 and 5.2.2.7. Bar code marking requirements for the DD Form 1348-1A (Issue Release/Receipt Document) are in 5.12. Bar code requirements for customer direct shipments are in 5.5.

5.4.1.1 Identification bar code content for unit packs and intermediate containers (see Figures 1, 18 and 19). The following shall be identified with machine-readable bar codes on unit packs and intermediate containers. For information on the placement of bar code marking on unit packs and intermediate containers, see 5.4.4.

Source: https://assist.dla.mil -- Downloaded: 2016-10-21T11:13Z
Check the source to verify that this is the current version before use.

a. The NSN/NATO stock number. The NSN/NATO stock number encoded in a bar code shall consist of the basic 13 data characters. Unless otherwise specified in the contract or purchase order, prefixes and suffixes to the stock number, as well as spaces and dashes, shall not be encoded.

b. The UII(s) and assigned serial number(s). UII and serial number bar code marking and content requirements are subject to complex conditional situations based on the choice of bar code used, whether or not UIIs are involved, the number of UIIs or serial numbers, and if the container is a consolidation of assorted items. Each situation is addressed in following paragraphs.

5.4.1.1.1 Identification 2D (PDF417) and linear (Code 39) bar code encoded serial numbers on unit packs and intermediate containers (see Figures 1, 17 and 18). When an item is assigned a serial number, that number shall be encoded and applied using machine-readable bar codes (2D (PDF417) and/or linear (Code 39)). The in-the-clear serial number shall be preceded by the abbreviation "SER NO". The letters “SER NO” are not encoded in the bar code. A 2D (PDF417) bar code, if used in lieu of the linear (Code 39) bar codes for package marking and serial number lists, shall include the serial number(s) and other identification information (see 5.4.1.1) and be preceded by a data area title for the encoded information, for example “ID DATA”. When more than five serial-numbered items are in an intermediate container, the requirements for encoded serial numbers on an exterior shipping container apply, as specified in 5.4.1.2.1.

5.4.1.1.2 Identification 2D (PDF417) bar code encoded unique item identifiers (UII) on unit packs and intermediate containers (see Figures 1, 17, and 18). When an item is assigned a UII, the UII shall be developed as specified in the DoD Guide to Uniquely Identifying Items. The UII(s) and the applicable identification information (see 5.4.1.1), to include a serial number (if assigned), shall be encoded in a 2D (PDF417) bar code and applied subject to the following provisions.

a. The bar code(s) shall be preceded by a data area title for the encoded information, for example “ID DATA INCLUDES UII(s)”.

b. Human-readable interpretation text for the UII(s) in a 2D (PDF417) bar code is optional.

c. See Appendix A for 2D (PDF417) bar code requirements and data semantics technical information. ANSI MH10.8.2 data identifier ‘25S’ shall be used to identify each item’s UII. The 2D (PDF417) bar code(s) shall be placed in close proximity to the identification marking.

d. When more than five UII marked items are in an intermediate container, the requirements for encoded UIIs on an exterior shipping container apply, as specified in 5.4.1.2.2.

Source: https://assist.dla.mil -- Downloaded: 2016-10-21T11:13Z
Check the source to verify that this is the current version before use.

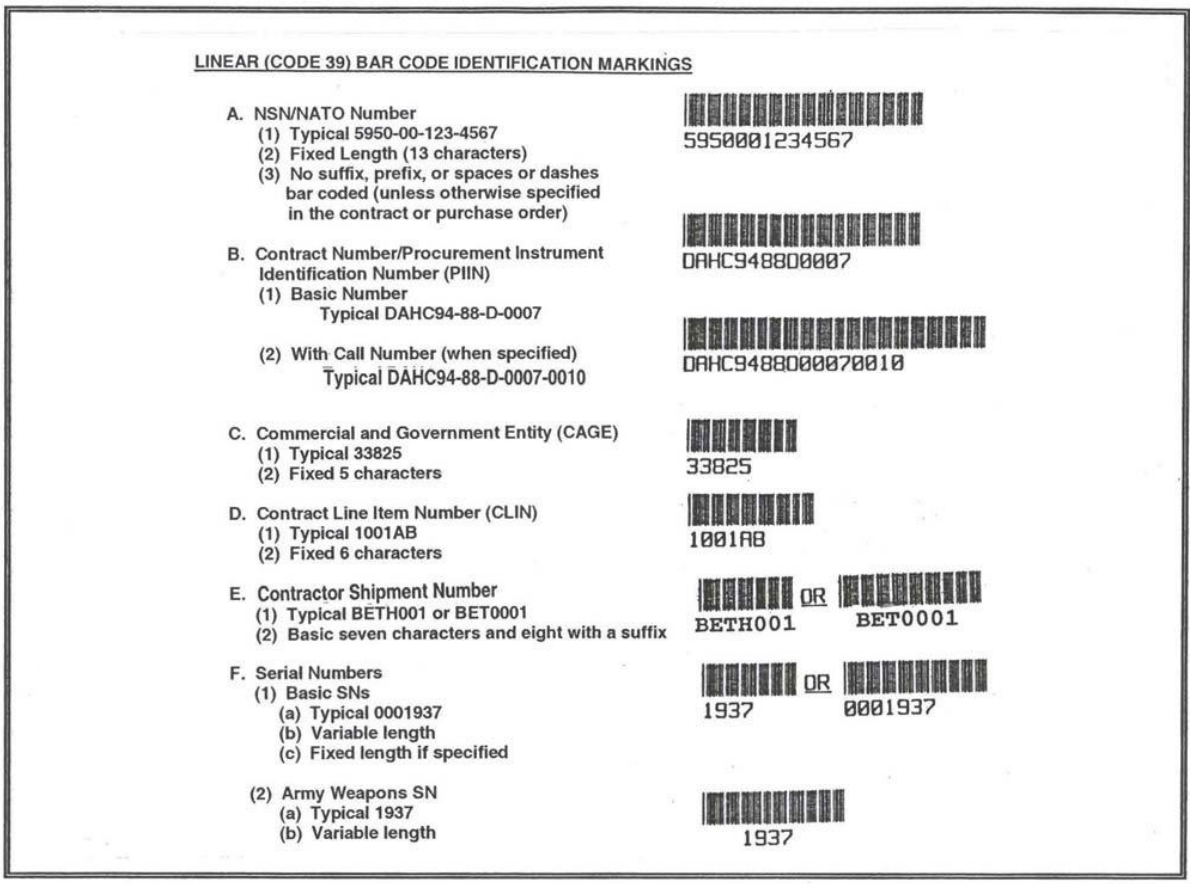

FIGURE 15. Examples of typical linear (Code 39) bar code fields.

5.4.1.2 Identification bar code content for exterior containers, palletized unit loads, and unpacked items (see Figures 1, 15, 22, and 25). Exterior shipping containers, palletized unit loads, and unpacked items shall be marked using machine-readable bar codes with the following information:

a. The NSN/NATO stock number. The NSN shall be encoded as specified in the 5.4.1.1.

b. The contract or order number (including the call number).

c. The CAGE code of the company awarded the contract.

d. The CLIN (when used) shall be encoded with six characters, including zero fillers placed to the left of the number, for example, 0001AB. For multiple CLIN(s), only the first number shall be encoded.

e. The contractor shipment number, when assigned, shall be encoded using seven characters and eight if it includes a suffix, (see DFARS Appendix F, Part 3). The first three

Source: https://assist.dla.mil -- Downloaded: 2016-10-21T11:13Z
Check the source to verify that this is the current version before use.

positions shall always be alpha, the last three always numeric, and the fourth either alpha or numeric, for example, BETH001 or BET0001.

f. The UII(s) and assigned serial number(s). UII and serial number bar code marking and content requirements are subject to complex conditional situations based on the choice of bar code used, whether or not UIIs are involved, the number of UIIs or serial numbers, and if the container is a consolidation of assorted items. Each situation is addressed in following paragraphs.

NOTE: For linear (Code 39) bar code configurations, see 5.4.2.4 thru 5.4.2.6. For information on the placement of bar code marking see 5.4.5.

5.4.1.2.1 Identification 2D (PDF417) and linear (Code 39) bar code encoded serial numbers on unpacked items, exterior shipping containers, and palletized unit loads. When an item is assigned a serial number, that number shall be encoded and applied using machine-readable bar codes (2D (PDF417) and/or linear (Code 39)) subject to the exemptions in 5.4.5, 5.4.5.10, 5.4.1.3, and the following provisions.

a. Serial numbers shall be shown as part of the identification marking except when the item is packed and marked in accordance with 5.10.14.1. Linear (Code 39) bar codes, if used, shall be arranged in a stacked, in-line, or combination configuration.

b. The in-the-clear serial number shall be preceded by the abbreviation "SER NO". The letters “SER NO” are not encoded in the bar code.

c. If more than five serial numbers are identified for an exterior container or palletized unit load, a serial number list shall be provided in lieu of marking the packaging.

(1) For each exterior container, the list shall contain a human-readable NSN and the serial number(s) accompanied by a bar code (2D (PDF417) and/or linear (Code 39)) identifying each serialized item in the container. Copies of the list(s) shall be placed inside and outside a container. The words “SERIAL NUMBER LIST INSIDE” shall be marked on the identification-marked side of the container. The list(s), of included serial numbers, attached to the outside of each container shall be enclosed in a water resistant envelope for possible use during receipt, inventory, and pick processes (to preclude opening the packed item). For a multi-piece shipment unit of exterior containers (i.e. multiple containers have same TCN), the list(s) of serial numbers for each piece shall also be included in the packing list envelope with the shipment packing list as applicable (see 5.11).

(2) For a palletized unit load, the list shall contain a human-readable NSN and serial number accompanied by a bar code (2D (PDF417) and/or linear (Code 39)) identifying each serialized item in the palletized unit load. The list(s) shall be in a water resistant envelope near the identification mark on the palletized unit load and the envelope should be labeled “SERIAL NUMBER

Source: https://assist.dla.mil -- Downloaded: 2016-10-21T11:13Z
Check the source to verify that this is the current version before use.

LIST INSIDE". For a multi-piece shipment unit of palletized unit loads (i.e. multiple palletized unit loads have same TCN), the list(s) of serial numbers shall also be included in the packing list envelope with the shipment packing list as applicable (see 5.11).

d. A single 2D (PDF417) bar code or multiple 2D (Macro PDF417) bar codes (see Appendix A) may be used in lieu of linear (Code 39) bar codes for package marking and serial number lists; however, the human-readable serial numbers shall be listed. The 2D (PDF417 or Macro PDF417) bar codes shall include the serial number(s) and other identification information (see 5.4.1.2) and be preceded by a data area title for the encoded information, for example "ID DATA".

5.4.1.2.2 Identification 2D (PDF417) bar code encoded unique item identifiers (UII) on unpacked items, exterior shipping containers, and palletized unit loads. When an item is assigned a UII, the UII shall be constructed as specified in the DoD Guide to Uniquely Identifying Items. The UII(s) and the applicable identification information (see 5.4.1.2) shall be encoded in a single 2D (PDF417) bar code or multiple 2D (Macro PDF417) bar codes subject to the exemptions in 5.4.5, 5.4.5.10, and the following provisions.

a. The bar code(s) shall be preceded by a data area title for the encoded information, for example "ID DATA INCLUDES UII(s)".

b. Human-readable interpretation text for the UII(s) in a 2D (PDF417 or Macro PDF417) bar code is optional for packaging marks and accompanying packing list documents.

c. All of the UIIs shall be encoded and applied in a single 2D (PDF417) bar code or multiple 2D (Macro PDF417) bar codes. Also, if more than five UIIs are contained within an exterior container or palletized unit load, the encoded data in the bar codes(s) on the items/containers/loads shall be on applicable serial number lists and/or UII list(s) similar to the serial number lists described in 5.4.1.2.1.c.(1) and (2).

5.4.1.3 Assorted-items pack (see 5.1.2.1). The exterior shipping containers and palletized unit load of an assorted-items pack shall have identification bar code marks applied as follows:

a. NSN/NATO stock number. None. However, unit packs and intermediate containers that comprise the assorted-items pack shall have identification bar code marking applied as described in 5.4.4.

b. Contract number. The contract number shall be marked with a bar code if the number applies to all items of the assorted-items pack. If the assorted-items pack content is sourced from multiple contracts, then the contract number shall not be marked.

c. CAGE and CLIN – None.

d. Contractor shipment number – None.

Source: https://assist.dla.mil -- Downloaded: 2016-10-21T11:13Z
Check the source to verify that this is the current version before use.

e. UII(s) and serial number(s) – None.

5.4.1.4 Sets, kits, and outfits (SKO). Identification bar code marking shall be applied to all SKOs, whether the SKOs were obtained through procurement or were assembled at a DoD activity. When a multiple container SKO is comprised of other SKOs, all containers shall be marked with identification bar codes that identify only the final (end item/product) SKO. When the SKO is obtained through procurement, the end-item/product NSN, CAGE, contract number, CLIN (when used), contractor shipment number, and UII/serial number of the complete SKO shall be encoded for exterior shipping containers and palletized unit loads. When an SKO is assembled at a DoD activity, only the NSN and UII/serial number shall be encoded. All containers of a multiple container shipment shall be marked as specified in 5.10.14.

5.4.1.5 Materiel destined for resale. Unit packs and intermediate containers of materiel destined for resale that normally have a Universal Product Code (UPC) bar code need not be remarked with linear (Code 39) and 2D (PDF417) bar codes.

5.4.1.6 Protected cargo (controlled, sensitive, classified, and pilferable items). Unless otherwise specified in the contract or solicitation, purchase order, or shipping document, the item description (nomenclature) shall be omitted from all shipping containers of protected cargo. Identification bar code marking is required. If the NSN is included as part of the identification marking, the linear (Code 39) bar code human-readable interpretation shall be shown. However, if the NSN is omitted, the human-readable interpretation shall also be omitted. For shipments of DLA Troop Support C&T items, the human-readable interpretation shall remain. For shipments of DLA Troop Support medical items, the item description (nomenclature) and the NSN, including the human-readable interpretation, shall be omitted; in lieu of the marking, the term "MEDICAL SUPPLIES" shall be used. The only exception is for medical material classified as both protected cargo and hazardous material; for these items, hazardous marking requirements shall take precedence.

5.4.2 Identification bar code labels / printing. Identification linear (Code 39) bar code marking shall be printed on a label or, upon authorization by the cognizant activity, by direct printing on the packaging material. Linear (Code 39) identification bar codes can be applied directly with the identification text marking or printed onto a separate label. Stenciling of linear bar codes is not permitted. The 2D (PDF417) bar code(s) shall be printed onto label stock. Bar code labels may be accepted for use without a quality verification if they are accompanied by a certificate of conformance (COC), from the printing activity, for review by the applying/marking activity. However, the COC does not supersede the need to scan the marking after any process that may affect the readability of the bar codes, such as the application of tape.

5.4.2.1 Label stock requirements. For label stock general requirements, see 4.2.2.

a. Labels shall be constructed of a computer-imprintable media with a 1-mil acrylic permanent adhesive or equivalent.

Source: https://assist.dla.mil -- Downloaded: 2016-10-21T11:13Z
Check the source to verify that this is the current version before use.

b. When specified in the contract or purchase order, identification bar code labels generated on direct-thermal printers may be used on unit packs, intermediate and exterior containers, palletized unit loads, and unpacked items. The direct-thermal labels shall be durable, buff-colored stock, or its equivalent.

5.4.2.2 Linear (Code 39) bar code printing specifications. Linear (Code 39) bar codes shall be prepared in accordance with ISO/IEC 16388. Print quality, element width, and wide to narrow ratios shall comply with ISO/IEC 15416 and ANSI MH10.8.1. The standard linear (Code 39) bar code density range should be from 3.0 to 9.4 characters per inch (CPI). When a direct-marking process is used to bar code exterior shipping containers or palletized unit loads, a bar code character density range of 1.7 to 3.0 CPI may be used. Higher bar code densities in the range of 9.4 to 15.5 CPI may be used, when specified, for unique applications.

5.4.2.3 Two-dimensional (2D) (PDF417) bar code printing specifications. 2D (PDF417) bar codes shall be prepared in accordance with ANSI MH10.8.2, ISO/IEC 15434, and ISO/IEC 15438 with reference to ANSI MH10.8.6 for industry considerations. Print quality shall comply with ISO/IEC 15415 and ANSI MH10.8.1. The bar code shall have a quiet zone of .04 inch (1.0 mm) above, below, to the left, and to the right. The quiet zone is included within the calculation of the size of the bar code (see Appendix A for additional specification requirements).

5.4.2.4 Identification linear (Code 39)) marking basic configurations (see Figure 16A). Linear (Code 39) bar codes may be arranged either vertically (ladder bars) or horizontally (picket fence bars) in a stacked or in-line configuration. Unless otherwise specified in the contract or order, all linear (Code 39) bar codes shall be in a horizontal configuration. When two or three linear (Code 39) bar codes are encoded, a stacked configuration is preferred. When three or more bar codes are configured in-line, the spacing between bar codes shall be increased so that false reads will not occur when using a non-contact reader.

5.4.2.5 Identification linear (Code 39) bar code complex configurations (see Figure 16B). There may be cases requiring the use of configurations more complex than the single stack or single in-line configuration. A combination configuration contains two or more columns of stacked bar codes and two or more rows of in-line bar codes. A staggered configuration is similar to a combination configuration, but each stack of bar codes is staggered, or offset, from the adjacent stack of bar codes. The staggered configuration satisfies the requirement for a distance of at least 2.25 inches (57.15 mm) between the bar codes when there are three or more in-line bar codes.

5.4.2.6 Identification linear (Code 39) bar code configuration information. The following configuration information is listed in the order of preference.

a. Two linear (Code 39) bar codes:

(1) Stacked.
(2) In-line.

Source: https://assist.dla.mil -- Downloaded: 2016-10-21T11:13Z
Check the source to verify that this is the current version before use.

b. Three or four linear (Code 39) bar codes:

(1) Single stack.
(2) Combination (e.g., two stacks of in-line linear (Code 39) bar codes).
(3) Staggered (e.g., two staggered stacks of two).

c. Five to ten linear (Code 39) bar codes:

(1) Single stack.
(2) Combination (e.g., two stacks of in-line linear (Code 39) bar codes).
(3) Staggered (e.g., two to four stacks of staggered linear (Code 39) bar codes).

d. Eleven or more linear (Code 39) bar codes:

(1) Single stack (if space permits).
(2) Combination (if three or more stacks are required, the spacing between stacks is increased from 0.5 to 2.25 inches (12.7 to 57.15 mm)).
(3) Staggered (several possible arrangements).

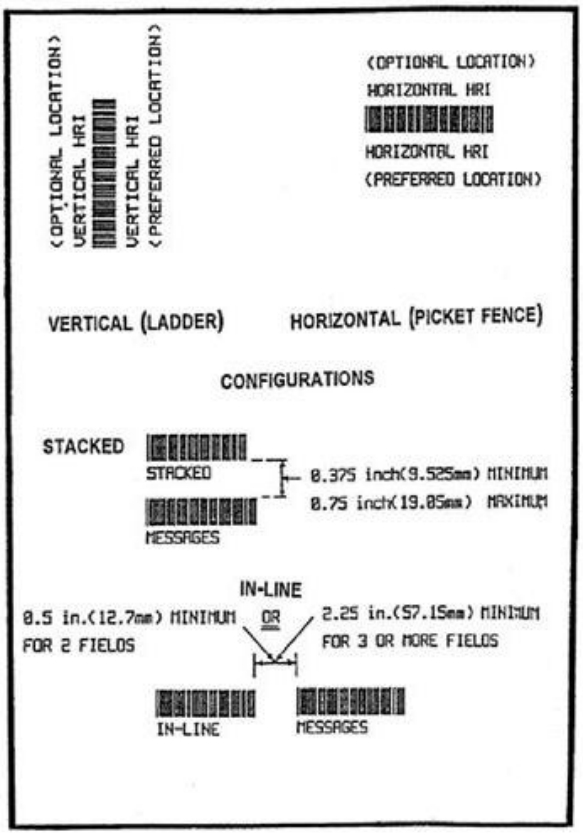

FIGURE 16A. Linear (Code 39) bar code configurations.

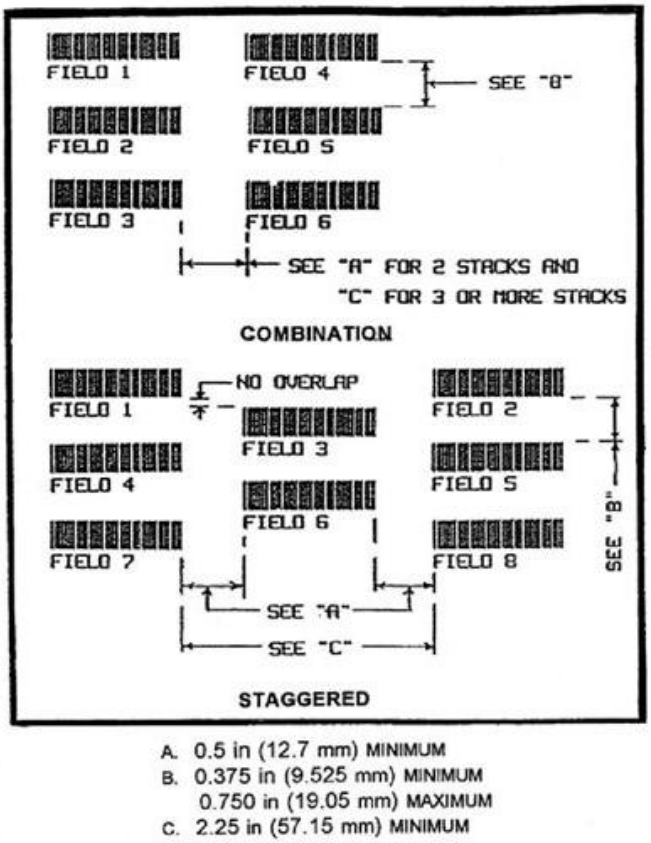

FIGURE 16B. Complex linear (Code 39) bar code configurations.

Source: https://assist.dla.mil -- Downloaded: 2016-10-21T11:13Z
Check the source to verify that this is the current version before use.

5.4.3 General application requirements for identification bar codes and labels. The bar codes shall be located in close proximity to the identification text marking (see 5.3). Identification bar code marking shall not be obscured by application of strapping or tape.

5.4.3.1 Applying identification bar codes on containers/surfaces (other than wood). On containers or marking surfaces other than wood, labels are required for identification 2D (PDF417) bar codes, and identification linear (Code 39) bar code marking shall be applied by labeling or by direct printing. When an untinted/transparent laminate or equivalent or a stretch/shrink wrap is placed over the label, the bar code(s) shall meet the print quality requirements of ISO/IEC 15438 for 2D (PDF417) and ISO/IEC 16388 for linear (Code 39) bar codes.

5.4.3.2 Applying identification bar code labels on wood containers/surfaces. On wood containers or marking surfaces, identification bar codes shall be applied only by labels. The labeling area of the container shall be given a smooth coat of spar varnish or a transparent acrylic, polyurethane, or epoxy coating. A clear/transparent laminate or equivalent shall be placed over the bar code label. In addition to a laminate or adhesive, it may also be necessary to affix the label by stapling. Any commercial-type staple may be used as long as it is placed outside of the bar code and 0.25 inch (6.35 mm) from the surrounding quiet zone. The label could be affixed to a piece of card stock that is slightly larger than the label. The card stock would then be stapled to the container with heavy-duty staples. For those applications requiring special label requirements, see 4.2.2.

5.4.3.3 Identification 2D (PDF417) and linear (Code 39) bar code marking on transparent containers. A bar code marking placed inside a transparent container shall be machine readable from the outside of the container. Similarly, an identification bar code marking on containers that are shrink/stretch wrapped into a load shall be machine readable from the outside of the load in at least one location and shall meet the readability requirements of ISO/IEC 15438 for 2D (PDF417) and ISO/IEC 16388 for linear (Code 39) bar codes.

5.4.4 Placement of identification 2D (PDF417) and linear (Code 39) bar code marking on unit packs and intermediate containers (see Figures 17 and 18 respectively). For linear (Code 39) identification bar codes, the NSN/NATO stock number shall be bar coded and applied above the in-the-clear text identification mark. When space does not permit placement of all the required identification bar code marking on one surface of the container, the identification bar code labels or marking can be placed on the opposite side of the container, the adjacent end, or on a tag attached to the container. When the unit pack and exterior shipping container are one and the same, only exterior container bar code marking shall be applied.

Source: https://assist.dla.mil -- Downloaded: 2016-10-21T11:13Z
Check the source to verify that this is the current version before use.

NOTE: "SHELF LIFE" is a placeholder for dates (see 5.10.1).

FIGURE 17. Bar code marking on unit packs.

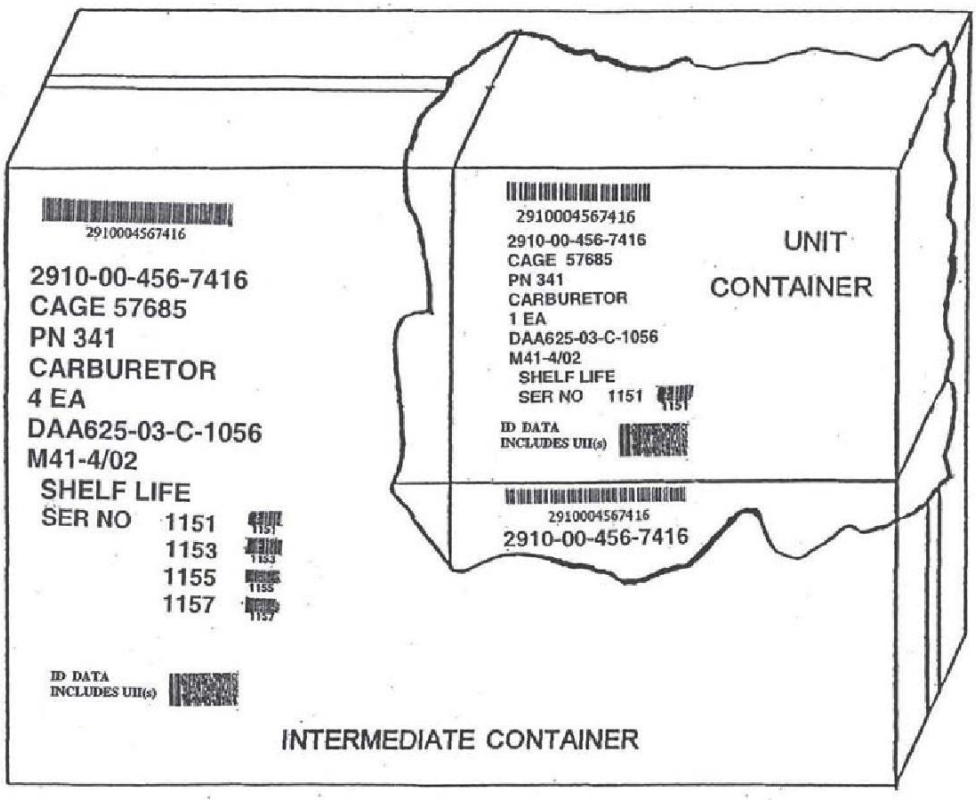

NOTE: "SHELF LIFE" is a placeholder for dates (see 5.10.1).

FIGURE 18. Bar code marking on unit and intermediate containers.

Source: https://assist.dla.mil -- Downloaded: 2016-10-21T11:13Z
Check the source to verify that this is the current version before use.

5.4.5 Placement of identification 2D (PDF417) and linear (Code 39) bar code marking on exterior shipping containers, palletized unit loads, and unpacked items.

a. Bar code placement shall be adjacent to identification marking as specified in the 5.3 subparagraphs.

b. A DoD shipment packaged in an overpack enclosure (protective outer packaging or palletized unit load) for convenience of handling during transportation is exempt from identification marking under the following conditions: the overpack enclosure is not an assorted-items pack (see 5.1.2.1), the cargo is non-hazardous, the unpacked items or containers within the overpack enclosure are marked/tagged with identification information in accordance with this standard, and the overpack enclosure is not intended for storage at destination. This exemption does not include the documentation requirements identified in 5.11.

5.4.5.1 Printing layout configurations for identification linear (Code 39) bar code data on exterior shipping containers, palletized unit loads, and unpacked items (see Figure 19). If linear (Code 39) bar codes are marked on exterior shipping containers, palletized unit loads, or unpacked items, they shall be applied as illustrated in one of the following configurations, listed in order of preference.

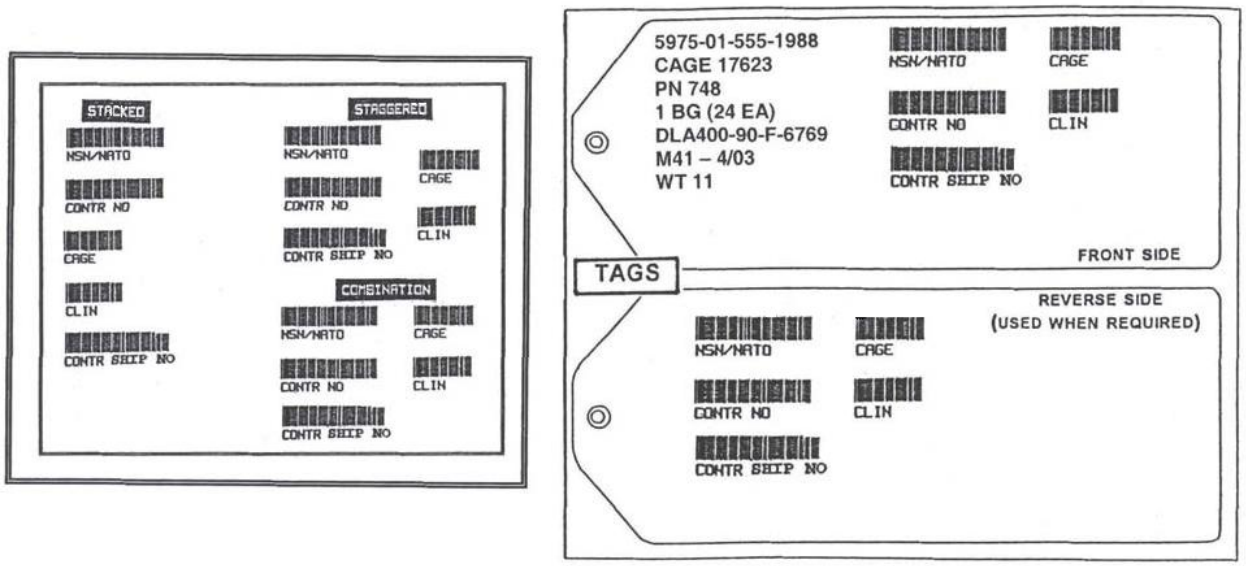

FIGURE 19. Typical linear (Code 39) bar code configurations for use on exterior containers and on tags.

a. A one-stack configuration with data fields stacked from top to bottom to include: NSN, contract number, CAGE code of the company awarded the contract, CLIN (if used), contractor shipment number, and serial number(s) (if assigned). When a stacked configuration is used, bar codes shall be left justified (left-hand (start) characters vertically aligned). For an example of the one-stack configuration see Figure 19.

Source: https://assist.dla.mil -- Downloaded: 2016-10-21T11:13Z
Check the source to verify that this is the current version before use.

b. A two-stack combination or staggered configuration arranged so that the NSN is above the contract number in the first stack and the CAGE code is in the second stack (see Figure 19).

c. A three-stack horizontal combination or staggered configuration (see Figure 16B).

5.4.5.2 Tag marking configurations for linear (Code 39) identification bar codes to be used with exterior shipping containers, palletized unit loads, and unpacked items (see Figure 19). Any linear (Code 39) bar code configuration discussed herein may be applied to a tag attached to a shipping container, palletized unit load, or unpacked item. Tags shall be marked by either direct marking or by applying pressure-sensitive labels. If space is available on the identification tag, the identification linear (Code 39) bar code label/marking may be applied to the right or below the identification marking. If space is not available, the linear (Code 39) bar code label/marking may be applied on the reverse side of the tag.

5.4.5.3 2D (PDF417) bar code configuration. See Appendix A for 2D (PDF417 and Macro PDF417) bar code requirements and data semantics technical information. If the encoded data volume exceeds the capacity of a single 2D (PDF417) bar code, Macro PDF417 bar codes (i.e. multiple linked bar codes– see Figure 20) shall be used. The 2D (PDF417) bar code(s) shall be placed in close proximity to the identification marking.

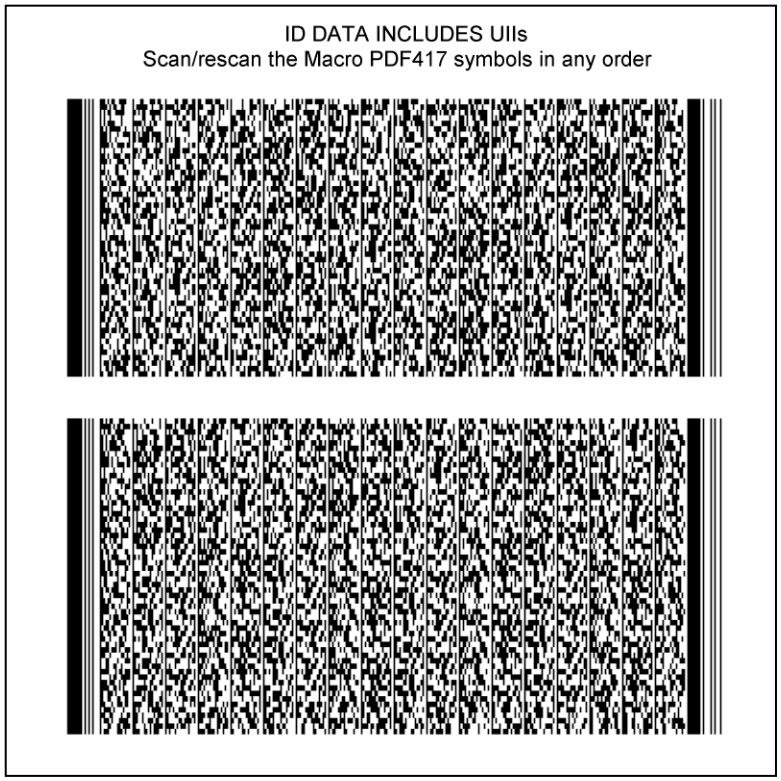

NOTE: Example is actual size and can be used for scanner testing.

FIGURE 20. Macro PDF417 bar codes on exterior container label.

Source: https://assist.dla.mil -- Downloaded: 2016-10-21T11:13Z
Check the source to verify that this is the current version before use.

5.4.5.4 Label protection for exterior shipping containers, palletized unit loads, or unpacked items. A waterproof, untinted/transparent, plastic, protective laminate such as ASTM D5486/D5486M, type I, class 2 tape, or equivalent protection, shall be applied to or shall be inherent to the label.

5.4.5.5 Boxes and crates under 10 cubic feet and those 10 cubic feet and over (see Figures 21 and 22). Regardless of size, the NSN/NATO stock number, contract or order number (if appropriate), CAGE code, CLIN (when used), contractor shipment number, UII(s), and assigned serial number(s) shall be encoded in machine-readable bar codes using the required data carrier(s) and applied to the identification-marked side of all boxes and crates used as exterior shipping containers. If used, the linear (Code 39) bar codes shall be located above, to the right of or below the identification marking and shall be in a horizontal (picket fence) configuration. The 2D (PDF417) bar code shall be located in close proximity to the identification marking.

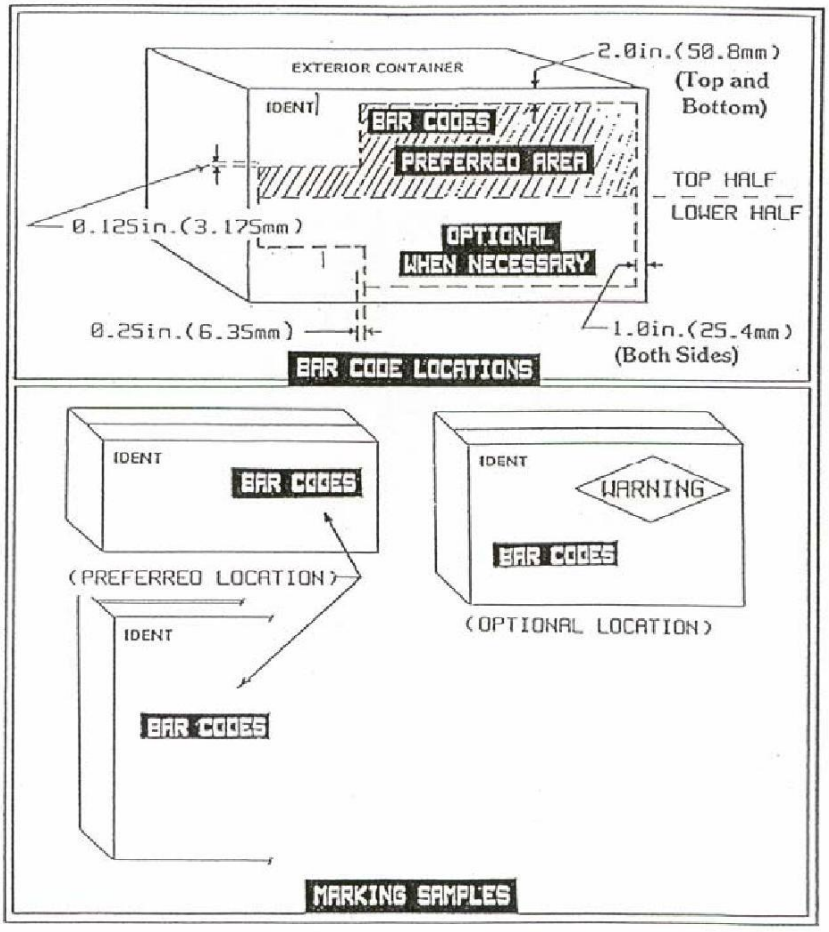

FIGURE 21. Exterior container bar code marking on boxes and crates under 10 cubic feet.

Source: https://assist.dla.mil -- Downloaded: 2016-10-21T11:13Z
Check the source to verify that this is the current version before use.

a. For boxes and crates 10 cubic feet and over, the identification bar code marking should also be placed on one end of the container.

b. The identification bar code marking shall be applied at least 2 inches (50.8 mm) from the top and bottom edges and at least 1 inch (25.4 mm) from the side edges of the box or crate. A quiet zone of at least 0.25 inch (6.35 mm) from the ends of the bar code to the nearest identification marking shall be maintained. When identification bar codes are located above or below identification marking, a separation of at least 0.125 inch (3.18 mm) shall be maintained between the marking and the bar code. If cleats, strapping, or other required marking may interfere with the placement of identification bar code marking, the identification bar code marking shall be placed as near as practicable to the prescribed data.

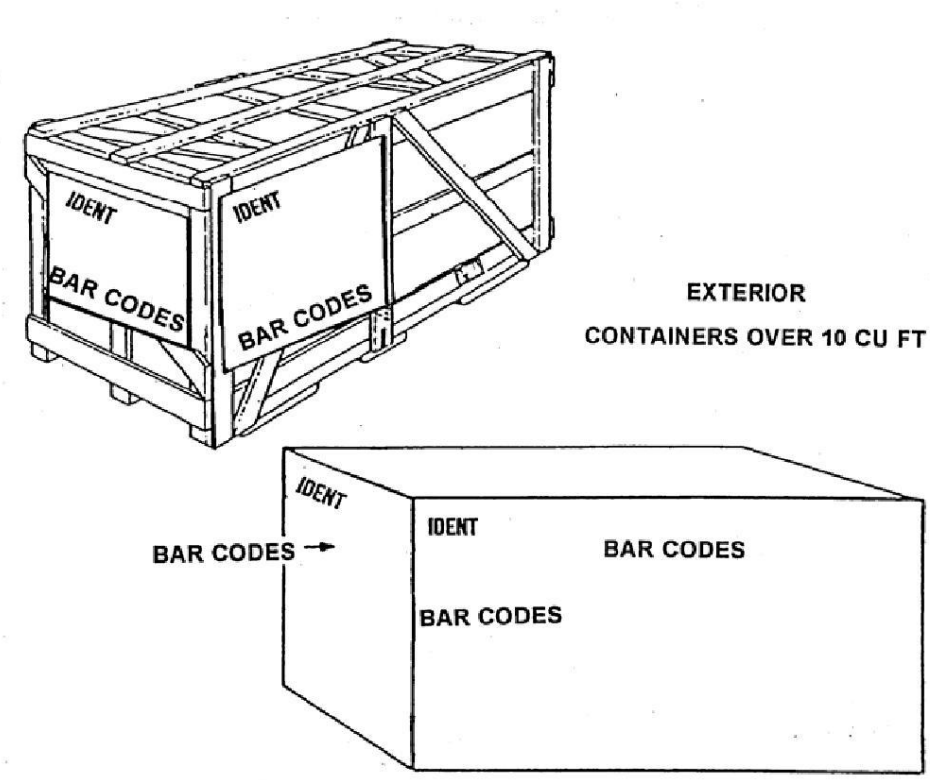

FIGURE 22. Exterior container bar code marking on boxes and crates 10 cubic feet and over.

5.4.5.6 Bales, cloth-covered bundles, paper shipping sacks, bags and textile/laminated textile bags, rods, shafts, pipes, and coils of wire (see Figure 23). Identification bar code marking shall be placed either on the container surface or on identification tags, using the required data carrier(s). When tags are used for these items, the tags shall be secured as shown. If used, linear (Code 39) bar code formats shall be as described in 5.4.5.2. Identification bar code marking on coils of wire shall be applied to either side of both identification tags.

Source: https://assist.dla.mil -- Downloaded: 2016-10-21T11:13Z
Check the source to verify that this is the current version before use.

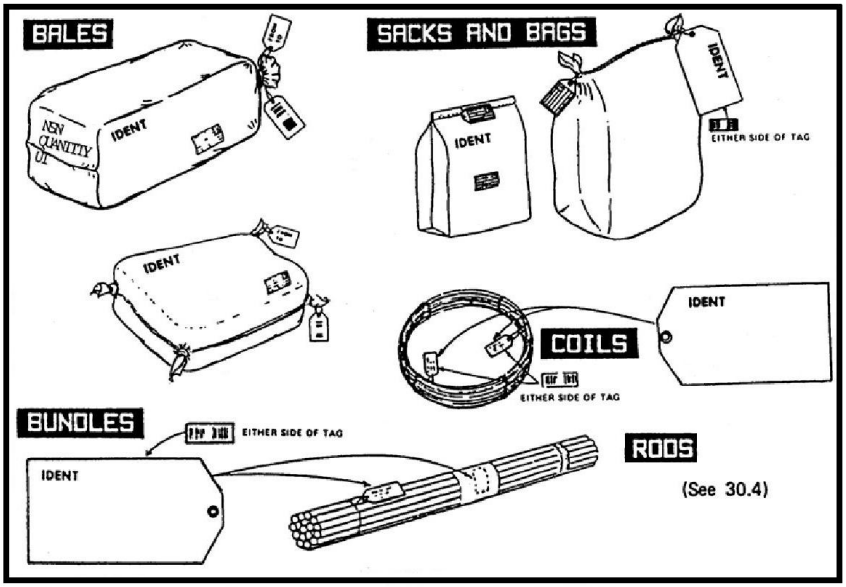

FIGURE 23. Bar code tagged materiel.

5.4.5.7 Barrels, drums, and other cylindrical containers (see Figure 24). The 2D (PDF417) bar code shall be applied in close proximity to the identification marking. Identification bar code marking shall not be placed on the tear strip or container seam.

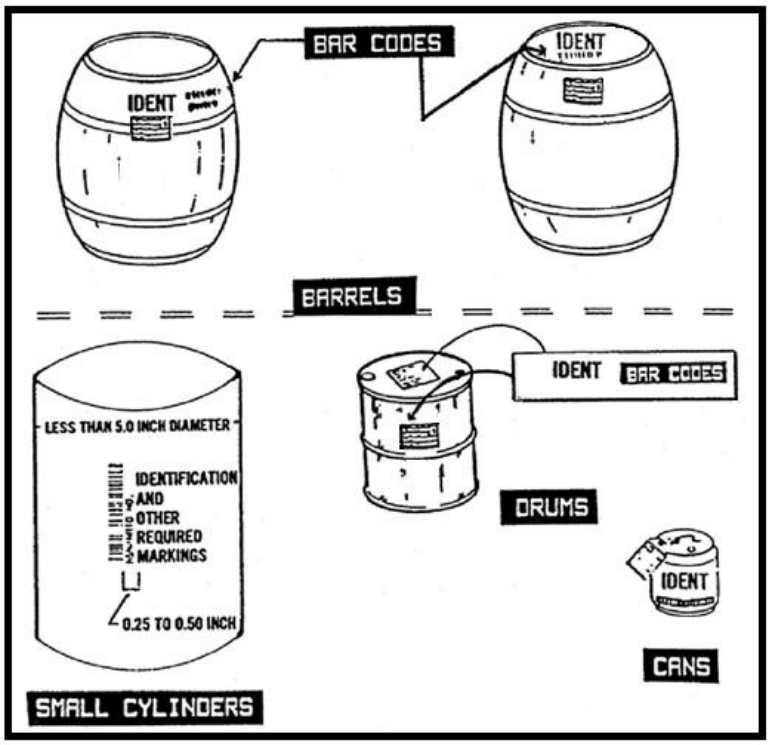

FIGURE 24. Bar code marking on cylindrical containers.

Source: https://assist.dla.mil -- Downloaded: 2016-10-21T11:13Z
Check the source to verify that this is the current version before use.

a. Greater than five gallons. If used, linear (Code 39) bar code marking shall be applied adjacent to the identification marking on the upper one-third of containers that are greater than five gallons.

b. Five gallons or less. If used, identification linear (Code 39) bar code marking shall be applied immediately to the right of or below identification marking on containers five gallons or less and shall be at least 1 inch (25.4 mm) from the bottom and top edges of the container. Stacked bar code configurations shall be left justified.

c. Cylindrical containers. If applied on cylindrical containers less than 5 inches (12.7 cm) in diameter, identification linear (Code 39) bar code labels or marking shall be vertical or in a ladder configuration. When the bar code is placed in this configuration, the bars are placed 0.25 to 0.5 inch (6.35 to 12.70 mm) from the left edge of the identification marking.

d. Marking on the tops of barrels, drums, and other cylindrical containers (see Figure 24). When identification marking is applied to the tops of empty or filled shipping containers such as barrels and drums, the identification bar code marking shall be applied beneath the identification marking. This is in addition to the bar code marking using the required data carrier(s), in 5.4.5.7.a and b. When marking reusable containers, all identification bar code marking that was applied for previous shipments or for storage shall be obliterated prior to application of current identification bar code marking.

5.4.5.8 Reels or spools of cable, wire, and rope (see Figure 25). The 2D (PDF417) bar code shall be placed in close proximity to the identification marking. If used, linear (Code 39) bar code marking shall be applied adjacent to or beneath the identification marking. On other than wood reels or spools, the surface shall be prepared and the labels applied in accordance with 5.4.3.1. For wood reels or spools see 5.4.3.2.

5.4.5.9 Paper- and cloth-wrapped rolls (see Figure 25). The 2D (PDF417) bar code shall be placed in close proximity to the identification marking. If used, linear (Code 39) bar code marking shall be applied to the right or below the identification marking.

5.4.5.10 Palletized unit loads (see Figure 25). The 2D (PDF417) bar code shall be placed in close proximity to the identification marking. If used, linear (Code 39) bar code marking shall be applied to the outside of the load immediately to the right of or below the identification marking on a marking board/panel or on the identification-marked side(s) of the load, as appropriate (see 5.3.2.7). If the individual containers that comprise the load are marked with bar codes and are scanable, no additional bar code marking is required.

Source: https://assist.dla.mil -- Downloaded: 2016-10-21T11:13Z
Check the source to verify that this is the current version before use.

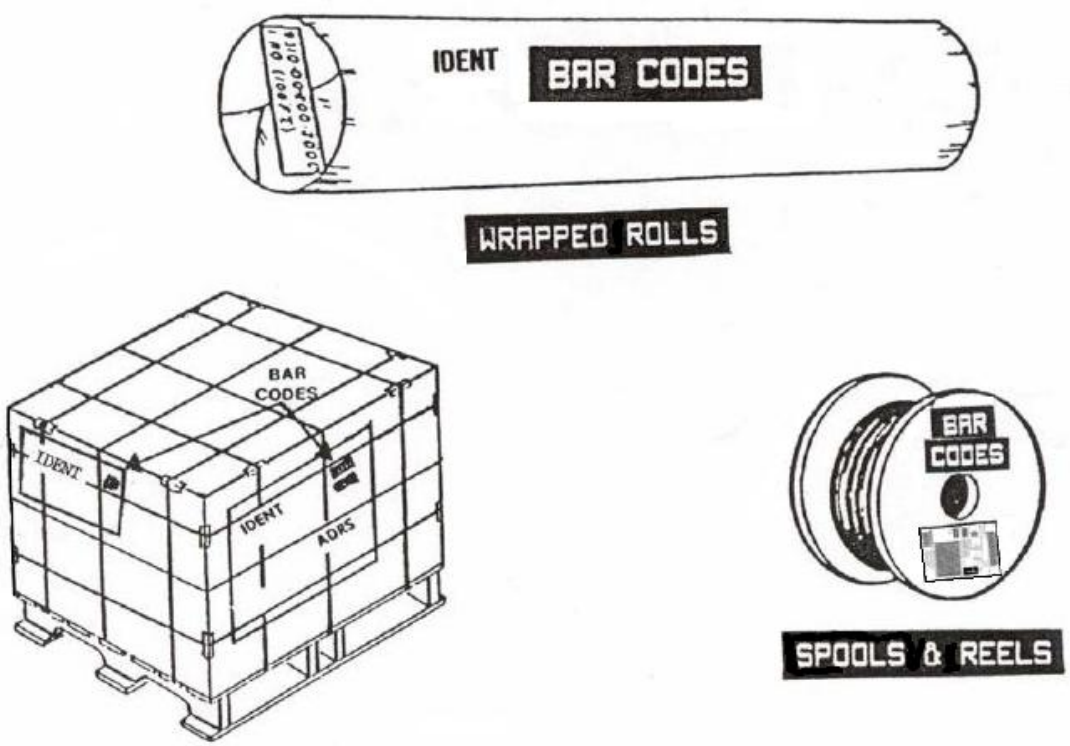

FIGURE 25. Bar code marking on miscellaneous materiel.

5.4.5.11 Unpacked major equipment (skidded or unskidded) (see Figure 8). The 2D (PDF417) bar code shall be placed in close proximity to the identification marking. If used, linear (Code 39) bar code marking shall be applied immediately to the right of the identification marking. If a marking board/panel is used, the bar codes shall be applied as specified in 5.4.5.5.

5.4.5.12 Bundled wood products. Identification bar code marking for bundled wood products shall be applied on a marking board or panel as specified in 5.4.5.5.

5.4.5.13 Small arms weapons container and palletized unit load labels (see Figure 15). Bar code label requirements shall be as follows:

a. Identification bar code labels used on other than wood and wood containers/surfaces shall comply with the requirements specified in 5.4.3.1 and 5.4.3.2 respectively.

b. Identification bar code labels on unit, intermediate and exterior containers, and palletized unit loads shall comply with requirements specified in section 5.4. The style shall be specified in the contract or purchase order.

5.5 Customer direct (formerly direct vendor delivery (DVD)). Unless otherwise specified in the contract or solicitation, contractor- or vendor-originated customer direct shipments require identification and address marking with 2D (PDF417) and linear (Code 39) bar codes in accordance with this standard. The issue/receipt bar code marking shall either be

Source: https://assist.dla.mil -- Downloaded: 2016-10-21T11:13Z
Check the source to verify that this is the current version before use.

placed on or printed on labels affixed to either the DD Form 250/250c or the commercial packing list. If placed on the DD Form 250/250c, they should be in blocks 15, 16, 17, etc. In either case, these documents shall be furnished in a packing list envelope as specified in 5.11.2.a. The issue/receipt bar code marking shall be provided in three bar codes (see below) containing data as described in DLM 4000.25-1, Appendices 1.35 and 2; and DLM 4000.25-2, Appendix 2. The human-readable interpretation is printed directly below each linear (Code 39) bar code.

a. Bar code: The document number and suffix (if applicable) for a maximum 15 characters. It may be referred to in a contract/order as the requisition number.

b. Bar code: The 13 digit national stock number (NSN) and 2 additional (Add) codes as applicable. In the absence of the NSN and Add code, the CAGE and part number shall be used for a maximum of 15 characters.

c. Bar code: The 3 character inventory control point routing identifier code (RIC), 2 character unit of issue (UI) code, 5 digit zero filled quantity (QTY), 1 character condition code (COND), blank or last 2 characters of the distribution code (DIST), and a 7 digit or 11 digit zero filled unit price (UP) showing dollars and cents with no decimal. The bar code shall have a fixed length of 20 or 24 characters to include leading zeros and blanks depending on the implemented version of the unit price annotation noted in DLM 4000.25-1, Appendix 3.48.

5.6 Foreign Military Sales (FMS) marking requirements. Identification and address marking for unit packs, intermediate and exterior containers, palletized unit loads, and for unpacked items shall be applied as specified in 0, 5.1.2, 5.2, and 5.4.5. Identification bar code container marking for FMS shipments is required unless otherwise specified in the contract or purchase order. Bar coding of the MSL for FMS materiel shipments is required. In addition, the following special requirements shall apply to FMS shipments.

5.6.1 Minimum package size. The minimum size box used for FMS shipments shall have enough surface area on the top and two sides to affix all required labels, packing lists, DD Forms 250 (Material Inspection and Receiving Report), DD Forms 1348-1A, and any other required marking without overstamping or overlapping. Identification bar codes shall be legible and readable. Nothing shall be placed or appear on the ends or bottom of the box, package, or container. A packing list is required.

5.6.2 FMS assorted-items pack. All FMS shipment packs containing assorted items (related or unrelated) shall be marked as a “MULTIPACK” as specified in 5.1.2.1.

5.6.3 Contractor-originated FMS shipments. The DD Form 250 shall be used as a packing list for contractor-originated FMS shipments in lieu of the DD Form 1348-1A, which may be used for FMS shipments originated by DoD activities. The DD Form 250 shall be prepared as specified in the Defense Federal Acquisition Regulation Supplement (DFARS), Appendix F, Part 3, F301, Preparation Instructions. Distribution of the DD Form 250 shall be made in accordance with the DFARS, Appendix F, Part 4, and any other specific information contained in the contract or purchase order. For additional information on the DD Form 250, see 5.11.2.

Source: https://assist.dla.mil -- Downloaded: 2016-10-21T11:13Z
Check the source to verify that this is the current version before use.

5.6.4 DoD originated FMS shipments. FMS shipments shall be accomplished as shown in Figure 26 as authorized by chapters 5 and 6 of DLM 4000.25-1, which also authorizes reprinting of additional copies of the DD Form 1348-1A.

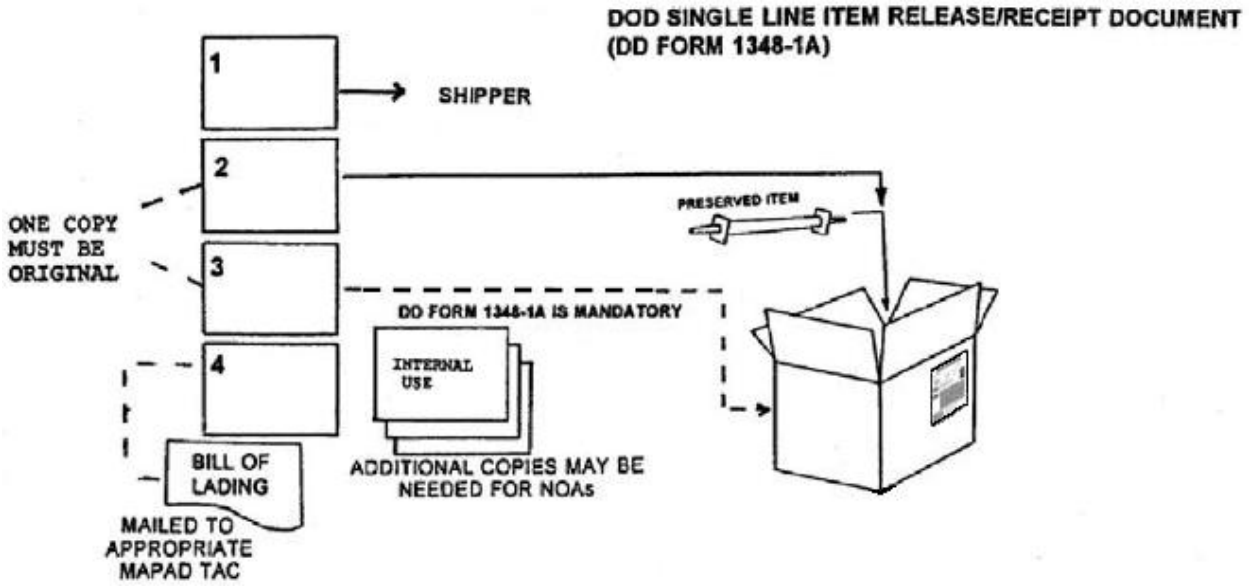

FIGURE 26. Distribution of the DD Form 1348-1A for FMS shipments.

a. One copy of the DD Form 1348-1A shall be retained by the shipper.

b. One copy of the DD Form 1348-1A shall be placed inside the container and one copy of the same form shall be affixed to the exterior of the container for each item that is inside the container. One of these copies shall be the original. Except for sensitive and/or classified items, there are no exceptions to this requirement. Palletized unit loads shall also require a DD Form 1348-1A packing list copy, as applicable (see 5.11).

c. One copy of the DD Form 1348-1A shall be forwarded (annotated with either the Government bill of lading or the commercial bill of lading number) to the address of the appropriate freight forwarder indicated by the Type of Address Code obtained from the Military Assistance Program Address Directory (MAPAD).

d. Additional copies of the DD Form 1348-1A may be needed for the notice of availability (NOA).

5.7 Shipments to NATO countries or shipments using NATO carriers. Shipments to NATO country installations/forces (other than US managed/operated) shall be marked as specified herein and in NATO Standardization Agreement (STANAG) 4281 for the marking and STANAG 4329 for the bar coding of military cargo.

5.8 Marking for specific commodities.

Source: https://assist.dla.mil -- Downloaded: 2016-10-21T11:13Z
Check the source to verify that this is the current version before use.

5.8.1 Household goods. Household goods shall be marked in accordance with DTR 4500.9-R, Part IV.

5.8.2 Medical material. Medical material shall be marked for shipment and storage as specified in the latest edition of Medical Marking Standard No. 1.

5.8.3 Subsistence. DLA designated subsistence materials shall be marked in accordance with DLA Troop Support Form 3556 (Subsistence).

5.8.4 Bulk cargo. Where the transportation conveyance is the only exterior container, such as for liquids, ore, or grains, the shipment shall be documented in accordance with the contract.

5.8.5 Petroleum products. Petroleum products shall be marked for shipment and storage as specified in MIL-STD-290.

5.9 Passive radio frequency identification (RFID). Passive RFID shall be used within DoD and by contractors/vendors in accordance with the DoD Suppliers' Passive RFID Information Guide (http://www.acq.osd.mil/log/sci/ait.html) and the DTR Part II, Chapter 208 (http://www.transcom.mil/dtr/dtrHome/).

5.9.1 Passive RFID tag technical requirements. Unless otherwise specified in the contract or solicitation, DoD and contractors/vendors shipping or delivering to the DoD shall use passive RFID tags that comply with the EPCglobal Class 1, Generation 2 RFID tag specifications.

a. Passive RFID tags shall be applied to case shipments and palletized unit load shipments.

b. Bulk commodities shall not be tagged in accordance with passive RFID tagging requirements. Bulk commodities are products carried or shipped in rail tank cars; tanker trucks; other bulk, wheeled conveyances; or pipelines. Examples of bulk commodities are: sand, gravel, bulk liquids (water, chemicals, or petroleum), ready-mix concrete or similar construction materials, coal, or combustibles such as firewood, and agricultural products (seeds, grains, animal feeds and the like).

5.9.1.1 Passive RFID tag data specifications. DoD tag data specifications and passive RFID tag formats for data constructs are located in the DoD Suppliers' Passive RFID Information Guide.

5.9.1.2 Passive RFID tag frequency. The DoD approved frequency range for passive RFID tags is 860-960 MHz.

5.9.2 Passive RFID tag placement. A passive RFID tag may be integrated with the military or commercial shipping label (RFID-enabled address label) or it may be placed in a

Source: https://assist.dla.mil -- Downloaded: 2016-10-21T11:13Z
Check the source to verify that this is the current version before use.

separate location on the shipment. This standard identifies recommended locations for the RFID-enabled address label and passive RFID tag placement. See 5.9.3 for ammunition/explosives applications.

5.9.2.1 Individual shipping container or palletized unit load. RFID-enabled address labels and/or passive RFID tags should be affixed at a suitable location where there is a minimum risk of damage, easy access to the respective bar codes, and the highest potential for successful passive RFID tag interrogation.

a. RFID-enabled address labels shall be applied to shipping containers or palletized unit loads per 5.3.2, including applicable sub-paragraphs.

(1) The RFID-enabled label should not be placed over a seam nor should sealing tape or bands be placed over the label in a manner that interferes with the scanning of the label bar codes or reading the transponder data.

(2) The RFID-enabled label should not be placed in a manner that overlaps any other existing RF transponder. There should be at least a 4 inch (10.2 cm) separation.

(3) To preclude inventory and receipt issues associated with pallet-level data, the RFID-enabled tag attached to a palletized unit load should not be applied to an exterior container within the load.

b. If RFID-enabled address labels are not used, then attach a separate passive RFID tag and a separate address label(s).

(1) Address labels should be affixed in accordance with the provisions of 5.3.2, including applicable sub-paragraphs.

(2) Parcel carriers may require the placement of commercial address label carrier information on the top of a shipping container in addition to customer and supplier information that would continue to be placed on address labels in accordance with the provisions of 5.3.2. Shippers are referred to ANSI MH10.8.1 for guidance concerning address label formats and locations for carrier, customer, and supplier information.

(3) The passive RFID tag should be placed on the identification marked side within the same boundary locations as noted for the address labels on shipping containers or palletized unit loads as per 5.3.2, including applicable sub-paragraphs.

(4) A passive RFID tag should not be placed in a manner that overlaps any other existing radio frequency (RF) transponder. There should be at least a 4 inch (10.2 cm) separation.

Source: https://assist.dla.mil -- Downloaded: 2016-10-21T11:13Z
Check the source to verify that this is the current version before use.

(5) To preclude inventory and receipt issues associated with pallet-level data, the RFID tag attached to a palletized unit load should not be applied to an exterior container within the load.

5.9.2.2 Exterior containers within a palletized unit load. These containers will not usually be marked with an address label and therefore require only that the passive RFID tag be affixed at a suitable location where there is a minimum risk of damage and the highest potential for successful passive RFID tag interrogation (see 5.9.2.1.b).

5.9.3 Tagging munitions/explosives with passive RFID. Munitions and explosives shall not be tagged until the certification requirements for hazards of electromagnetic radiation to ordnance (HERO) are met for the passive RFID tag, tag reader, and antenna configuration. For additional information, refer to the Automated Movement and Identification Solutions website at http://www.pdamis.army.mil/Contracts/prfidii/prfidii.html and contact the Contracting Officer's Representative at the phone number listed.

5.9.4 Electronic data interchange (EDI) transactions. Advance Shipment Notice (ASN) transactions (EDI 856), Shipment Status transactions (EDI IC 856S), or Consolidated Shipment Notice transactions (EDI IC 856A) shall be used to link the passive RFID tag to the content level detail information associated with each of the container types in accordance with DFARS 252.211-7006 guidance. Consignors shall transmit these EDI transactions to consignees in advance of shipment. For additional information, refer to http://www2.dla.mil/J-6/dlmso/elibrary/TransFormats/140_997.asp and http://www.transcom.mil/dteb/.

5.10 Special marks and labels. The special marking discussed in this standard are examples of the types of special marking that may be specified in a contract or purchase order. Every contract or solicitation shall include all special marking requirements applicable to the contract. Unless otherwise specified, the special marking shall be placed in a conspicuous location on the identification-marked side of the applicable container, palletized unit load, or unpacked item.

5.10.1 Shelf-life marking (see Figure 28). Shelf-life marking shall be shown as part of the item identification data on unit packs, intermediate containers, exterior containers, and unpacked items. Shelf-life marking shall include the manufactured, cured, assembled or packed date (apply one date), and the expiration or inspect/test date, as appropriate. Shelf-life marking can be specified in solicitations or contracts, purchase orders, purchase descriptions, specifications and material standards. All shelf-life marking shall be based on shelf-life codes (SLC) (see Table IV). In accordance with DoD 4140.27-M, there are two types of shelf-life items. Type I shelf-life items have a definite non-extendible period of shelf life. They are assigned alpha shelf-life codes (SLCs) (excluding “X”). Type II shelf-life items have an assigned shelf-life time period that may be extended after completion of visual inspection, certified laboratory test, or restorative action. Type II items are assigned numeric SLCs and “X”. Items that are assigned a SLC of zero (non-deteriorative) do not require shelf-life marking. For definitions of the assembled date, cured date, expiration date, inspect/test date, manufactured date, and packed date, see Table III.

Source: https://assist.dla.mil -- Downloaded: 2016-10-21T11:13Z
Check the source to verify that this is the current version before use.

a. For Type I shelf-life items, the mark includes: manufactured (MFD) date, cured date, assembled date, packed date (subsistence only) (apply one date, as appropriate), and expiration (EXP) date (see note). For items that contain rubber or synthetic elastomers, the expiration date shall be calculated from the cured date of the rubber/elastomer.

b. For Type II shelf-life items, the mark includes: manufactured date (MFD), cured date, assembled date, packed date (subsistence only) (apply one date, as appropriate), and inspect/test (INSP/TEST) date (see note). For items that contain rubber or synthetic elastomers, the inspect/test date shall be calculated from the cured date of the rubber/elastomer.

EXAMPLE 1 (TYPE I)	EXAMPLE 2 (TYPE II)	EXAMPLE 3 (TYPE II)
MFD DATE 10/13	ASSEMBLED DATE 10/13	CURED DATE 4Q13
EXP DATE 10/14	INSP/TEST DATE 10/16	INSP/TEST DATE 4Q18

NOTE: The words “TYPE I” or “TYPE II” shall not be applied as part of the shelf-life marking. For other than cure dated items (see examples 1 and 2), the manufactured date, assembled date, packed date, expiration date, and the inspect/test date shall be expressed by the numeric month followed by the last two digits of the calendar year, with the day of the month being the last day. For cure dated items, the cured date, expiration date, and the inspect/test date (see example 3) shall be expressed by the calendar quarter followed by the last two digits of the calendar year, with the day of the quarter being the last day. When two or more unit packs of the same item are consolidated within any intermediate or exterior containers and have different shelf-life dates, the earliest dates shall be shown on those containers.

c. Prior to issue or shipment, Type II shelf-life materiel that has been extended to a new inspect/test date, shall have a DD Form 2477 (see Figure 27 - size 1, 2 or 3) applied as specified in DoD 4140.27-M.

SHELF-LIFE EXTENSION NOTICE

PER DOD 4140.27-M, CONTAINERS REQUIRE RE-MARKING WITH EXTENDED SHELF-LIFE DATA.
UNITS OF ISSUE REQUIRE RE-MARKING UPON OPENING CONTAINER.

NSN: _____

CONTRACT NUMBER: _____

LOT/BATCH NUMBER: _____

DATE TESTED: _____

NEXT INSP/TEST DATE: _____

AUTHORITY: _____
(QSL, MQCSS, Other)

INSPECTED BY: _____
(Activity and Inspector's Name or Number)

DD FORM 2477-1, APR 1999 PREVIOUS EDITION MAY BE USED.

FIGURE 27. DD Form 2477-1, Extended Shelf Life.

Source: https://assist.dla.mil -- Downloaded: 2016-10-21T11:13Z
Check the source to verify that this is the current version before use.

5.10.2 Project code marking (see Figure 28). When a project code has been assigned or is specified in a solicitation or contract, project code labels shall be applied to exterior containers, palletized unit loads, or unpacked items. The project code shown in the solicitation, contract or purchase order (e.g., ARI, ABC, etc.), shall appear in the address and also on a white label having a disc of a highly contrasting color superimposed on it. If more than one project is required, all project codes may be put on one label. Label sizes shall be 3 by 3 inches (76.2 by 76.2 mm) with a 2 inch (50.8 mm) diameter disc or 9 by 9 inches (22.9 by 22.9 cm) with a 6 inch (15.2 cm) diameter disc, with both having proportionate contrasting lettering. The project code may also be applied directly on a container. When marking is applied by tags, the project code shall be placed on the identification tag adjacent to the identification marking. The project code marking shall be applied as follows:

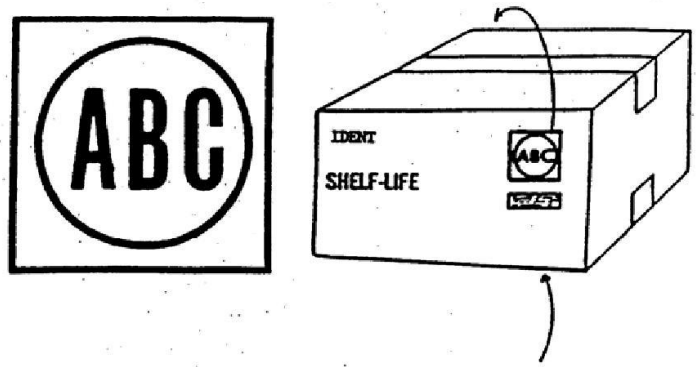

SPECIAL HANDLING DATA/CERTIFICATION

1. ITEM NOMENCLATURE Pistol 9MM	2. NET QUANTITY PER PACKAGE Weight of individual Package	3. TRANSPORTATION CONTROL NO. Enter the TCN
	4. CONSIGNMENT GROSS WEIGHT Wt of all Pallets/Packages on TCN	5. DESTINATION Destination or World Wide Mobility
6. SUPPLEMENTAL INFORMATION "Constant Surveillance and Custody Service (CIS)" "Signature and Tally Record Service (675)"		
This is to certify that the above named materials are properly classified, described, packaged, marked and labeled, and in proper condition for transportation according to the applicable regulations of the Dept of Transportation. THIS IS A U.S. DEPARTMENT OF DEFENSE SHIPMENT! *(Complete applicable blocks below)*		
7. DTR REFERENCE DOD 4500.9R Part II, Chapter 205, Paragraph I. 2.		
8. HANDLING INSTRUCTIONS Couriers will be E-4 or higher and/or civilian grade equivalent.		
9. ADDRESS OF SHIPPER 162FW 6620 S. Air Guard Way, Tucson, AZ 85706	10. TYPED NAME, SIGNATURE AND DATE SMSgt Charles C. Kilmer 14 Jul 2005	

DD FORM 1387-2, NOV 2004 PREVIOUS EDITION IS OBSOLETE. *Form Approved/OMB No. 0704-0188*

FIGURE 28. Examples of special marking (shelf life, project code, and transportation special handling/protective services marking).

a. Rectangular containers, consolidation containers, and palletized loads - two discs, one on the identification side and one on the opposite side (in addition to the container discs).

b. Cylindrical containers - two discs equally spaced on the circumference.

c. Irregularly shaped containers and loose or unpacked items - stenciled or printed on the identification-marked side of a tag.

Source: https://assist.dla.mil -- Downloaded: 2016-10-21T11:13Z
Check the source to verify that this is the current version before use.

d. Vehicles or other major unpacked items - one disc on the marking board, or one disc applied directly on a vehicle by a waterproof, pressure-sensitive tape such as ASTM D5486/D5486M. The tape shall be placed over the label and extend a minimum 0.5 inch (12.7 mm) from all edges of the label.

e. Postal – one disc adjacent to the address marking.

f. SEAVANs - not marked. However, containers or items comprising the load shall be marked.

5.10.3 Transportation special handling/protective services (see Figure 28). Non-hazardous shipments moving by military controlled aircraft (including military contract airlift) requiring special handling/protective services shall have a DD Form 1387-2 (Special Handling Data/Certification) label affixed to the exterior container, palletized unit load, or unpacked item. The form shall be prepared as specified in DTR 4500.9-R, Part II for non-hazardous, classified/protected materiel. It shall be placed on the same side of the container, palletized unit load, or unpacked item as the address marking. Non-hazardous materiel moving by military controlled aircraft such as items subject to damage by heat or freezing and life or death shipments also require a completed DD Form 1387-2.

5.10.4 Structural marking. When required, structural marking such as “REMOVE TOP FIRST” or “TO OPEN TOP: REMOVE SCREWS” shall be placed on shipping containers on or near the structure described. Containers designated as “reusable” shall include sufficient structural marking to provide instructions for opening and unpacking without causing damage to the container, packing materials, and the container's contents.

5.10.5 Valuable and security items. When items such as certain drugs, narcotics, precious metals, currency, jewelry, cameras, and similar type valuables are shipped, marking shall be as specified by the cognizant activity or as required by regulation or statute. When no marking requirements are specified, marking shall be as prescribed in 0 and 5.1.2. Alcohol or alcoholic beverages shall be documented and marked in accordance with U.S. Treasury Department regulations.

5.10.6 Special handling, including arrows and FRAGILE or DELICATE marking (see Figure 29). All containers shall have appropriate caution marking applied. Special handling marking such as “TOP”, “UP”, “THIS SIDE UP”, “GLASS”, “KEEP DRY”, “PERISHABLE”, “KEEP FROZEN”, “FRAGILE” or “DELICATE” shall be placed on shipping containers, as applicable. The marking shall not interfere with or obscure other marking. Containers of fragile or delicate items shall be marked with a fragile label or by stenciling or stamping the word “FRAGILE” or “DELICATE” on the container. When space permits, “FRAGILE” or “DELICATE” marking shall be placed on the identification-marked side and one end of a rectangular container, and on two equally spaced areas on the circumference of a cylindrical container. Special handling illustrations are contained in ASTM D5445.

5.10.6.1 Legend “USE NO HOOKS” (see Figure 29). The legend “USE NO HOOKS” in letters not less than 1.5 inches (38.1 mm) in height shall be stenciled on both sides of shipping

Source: https://assist.dla.mil -- Downloaded: 2016-10-21T11:13Z
Check the source to verify that this is the current version before use.

containers in which the contents are susceptible to damage by the use of hooks. In addition, a hook symbol with a superimposed "X" sufficiently heavy to convey the intended prohibitory use of the hooks shall be placed directly above the legend.

5.10.6.2 Arrows (see Figure 29). When containers are required to be stacked or the top surface shall remain up, two sides of a rectangular container and two equidistant points on the circumference of a cylindrical container shall be marked or labeled "UP" with an arrow pointing toward the top of the container. The arrow shall be not less than 1 inch (25.4 mm) in length and its overall size shall be proportionate to the available space. Arrows are to be used only to indicate the words "UP" or "TOP".

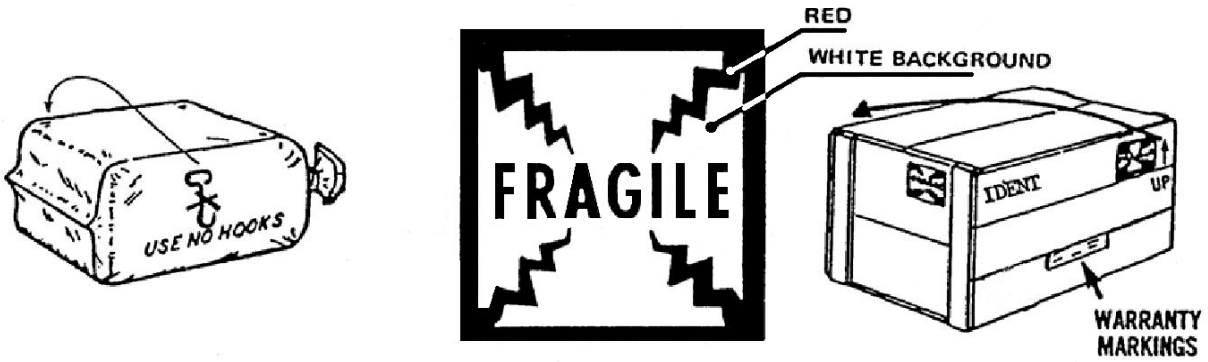

FIGURE 29. Examples of special marking (FRAGILE, UP, arrows, USE NO HOOKS and warranty marking).

5.10.7 Warranty marking (see Figure 29). When an item is procured with a warranty agreement, warranty marking shall be applied to all containers. Applicable warranty marking shall be placed on containers of serviceable/unserviceable materiel shipped from field units. Warranty marking shall indicate the time period or condition of the warranty (e.g., days/months, hours of operation, etc.). Warranty marking shall be applied by labeling, tagging, or printing and shall be prefaced by the words "WARRANTED ITEM". All warranty information, including "WARRANTED ITEM", shall be in upper case letters of the same style font. The marking shall be located adjacent to or below the identification marking. For an assorted-items pack that contains items covered by a warranty, the words "WARRANTED ITEMS INSIDE" shall be placed immediately below the identification marking.

Examples of warranty marking are:

WARRANTED ITEM WARRANTY EXPIRES AFTER 1000 HOURS OF OPERATION	WARRANTED ITEM WARRANTY EXPIRES 1 JANUARY 2003	WARRANTED ITEM WARRANTY GOOD FOR 180 DAYS FROM DATE ITEM IS PUT INTO USE

5.10.8 Pictorial symbols for marking (see Figure 30). Containers shall be marked with pictorial symbols to indicate special handling and storage needs, such as Temperature Limits, Do Not Stack, Do Not Drop, Do Not Roll, Clamp Here, Fragile Handle With Care, Keep Away

Source: https://assist.dla.mil -- Downloaded: 2016-10-21T11:13Z
Check the source to verify that this is the current version before use.

From Heat, and Keep Away From Cold. They may appear on a label or be printed directly on the package. Affirmative symbols need not be framed by borderlines, but all negative symbols, that is, "Do Not …...." shall have borders with a slash mark across. Additional pictorial marking symbols and their application are illustrated in ASTM D5445.

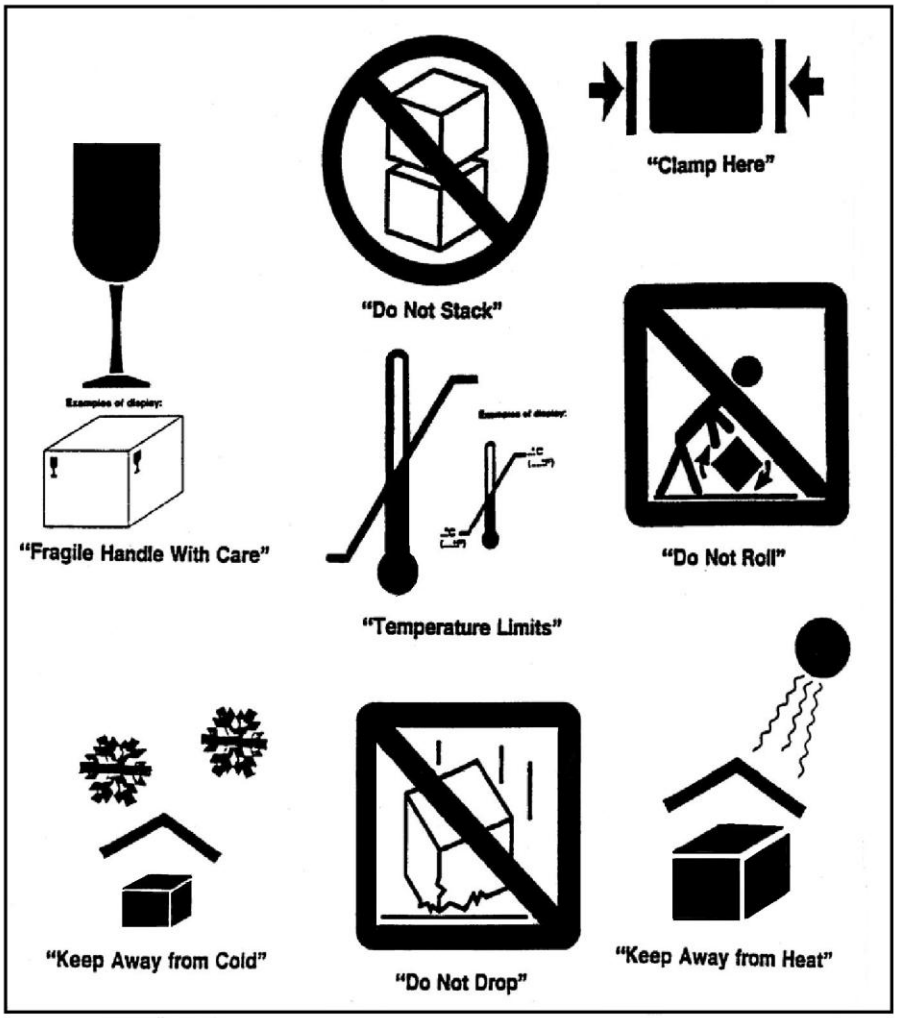

FIGURE 30. Examples of pictorial symbols.

5.10.9 Lag bolt caution marking. Demountable crates shall be conspicuously marked with the words "REMOVE LAG BOLTS BEFORE OPENING".

5.10.10 Method 50 (see Figure 31). Packs with desiccant shall bear a cautionary marking on the identification-marked side to alert personnel that the item is preserved with desiccant and shall not be opened prior to use. Items packaged with desiccant shall be completely reprocessed with new desiccant after opening. On unit packs and intermediate containers, cautionary marking may be applied by any means that provides a high degree of visibility and permanence. On exterior containers, the marking may be applied by any means that provides the required degree of legibility and durability. When a cautionary marking is

Source: https://assist.dla.mil -- Downloaded: 2016-10-21T11:13Z
Check the source to verify that this is the current version before use.

applied directly on the container, red marking ink that is waterproof, bleed-resistant, and resistant to ultraviolet ray degradation shall be used (see 6.5). When space is not available to permit the use of a label, the words "PACKAGED WITH DESICCANT - DO NOT OPEN UNTIL READY FOR USE" shall be placed on the container adjacent to the identification marking.

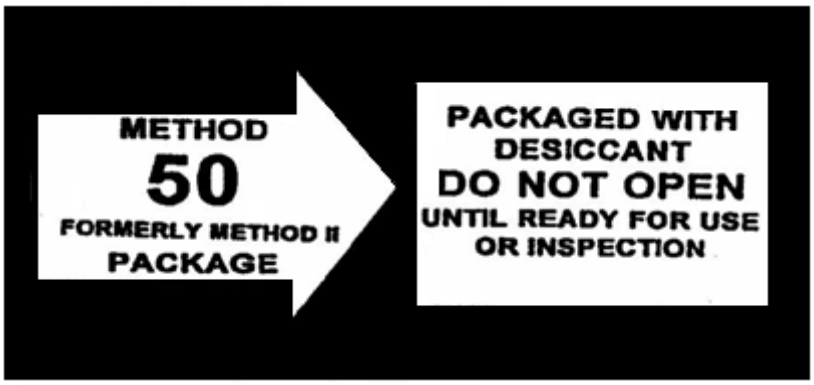

FIGURE 31. Method 50 marking.

5.10.11 Magnetized material. Containers and/or bare items that contain magnetized material, as defined in AFMAN 24-204(INTERSERVICE)/TM 38-250/NAVSUP PUB 505/MCO P4030.19J/DLAI 4145.3, being shipped by military aircraft, shall be marked and labeled per said publication. Magnetized material, as defined by IATA and ICAO, shipped by commercial air, shall be marked and labeled in accordance with the ICAO and IATA regulations.

5.10.12 Engineering or technical order changes or modifications (see Figure 32). Containers of materiel that are furnished for a modification work order (MWO) shall be marked with the MWO number preceded by the letters "MWO". The marking shall be located in the lower right-hand corner of the identification-marked side of the container.

5.10.13 Lot, batch, or identification control numbers (see Figure 32). Lot, batch, or identification control numbers shall be shown on unit packs, and intermediate and exterior containers. They shall be preceded by the proper designation, e.g., LOT NO 5, and shall be shown adjacent to the contract number.

Source: https://assist.dla.mil -- Downloaded: 2016-10-21T11:13Z
Check the source to verify that this is the current version before use.

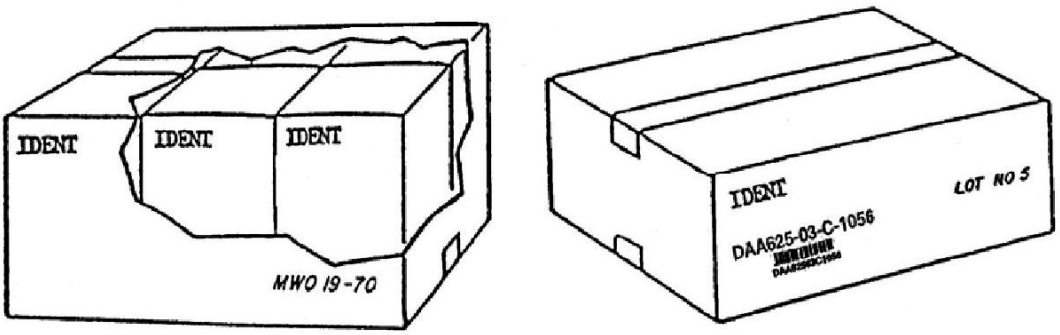

FIGURE 32. Examples of special marking (modification work order (MWO)) and lot number marking on unit packs and intermediate and exterior containers).

5.10.14 Set or assembly marking (see Figure 33). When a set or assembly is placed in two or more containers, each container shall be marked with its own number within the set (i.e., 1 of 2), the total number of containers making up the set (i.e., 2 of 2), and the number of the set within each shipment (i.e., Set 1). Set or assembly marking shall be placed in the lower right-hand corner of the identification-marked side of the container as shown. A 2 inch (50.8 mm) disc of a high contrast color shall be placed above the numbers on each container.

5.10.14.1 Set or assembly marking for component parts of disassembled end-items/products (see Figure 33). All component parts of disassembled items/products shall have the assigned end-item/product serial number shown in the clear and bar coded on each shipping container comprising the applicable set. When an end-item/product is assigned a UII, the UII shall be applied to each shipping container comprising the end-item/product applicable set using the 2D (PDF417) bar code, which is annotated with a data area title for the encoded information, for example “ID DATA INCLUDES UII(s)”. The data area title text is not encoded. Human-readable interpretation text for the 2D (PDF417) bar code is optional. The required serial number (if any) shall be shown immediately below the fractional number that identifies the individual container and the total number of containers comprising the set. When an end-item/product that does not have a serial number is disassembled for shipment, a date (month, day, and year) followed by a capital letter to identify a set or assembly shall be shown on the shipping container in lieu of a serial number. Each set shall bear a different letter. Double letters may be used, when appropriate.

Source: https://assist.dla.mil -- Downloaded: 2016-10-21T11:13Z
Check the source to verify that this is the current version before use.

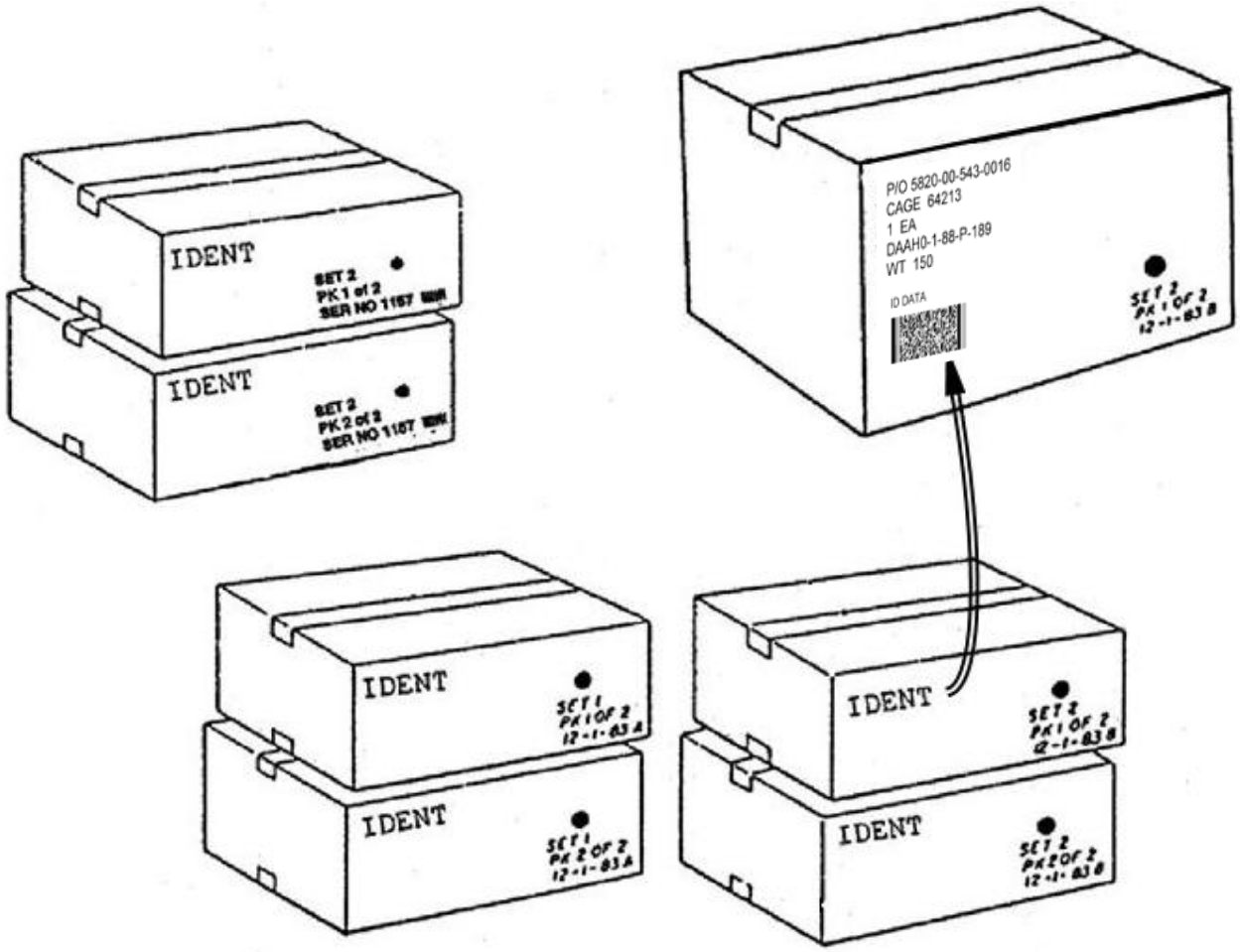

FIGURE 33. Examples of special marking (set or assembly marking, with component parts of disassembled items and single stock-numbered set marking).

5.10.14.2 Single stock-numbered and part-numbered sets (see Figure 33). When the components of a single stock-numbered or part-numbered item are packed in two or more shipping containers or are stored together as a set, the stock number or part number shown on each shipping container shall be that of the complete set and shall be prefixed with “P/O” (part of).

5.10.14.3 Single stock-numbered and part-numbered sets with different stock-numbered parts (see Figure 34). When a single stock-numbered set or part-numbered set is packed along with related parts having different stock numbers, in addition to marking the complete set stock number, the stock number(s) of the subordinate components shall be listed at the bottom of the container identification marking and shall be prefixed by the words “CONSISTING OF”. The component information shall include the quantity and unit of issue.

Source: https://assist.dla.mil -- Downloaded: 2016-10-21T11:13Z
Check the source to verify that this is the current version before use.

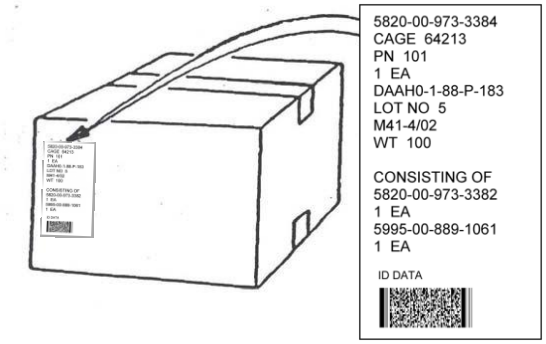

FIGURE 34. Single stock numbered item consisting of other stock numbered items in a single container.

5.10.15 Consolidation containers. Consolidation containers that are shipped to a single destination but contain individual shipments/containers for multiple consignees (multiple DoD activity address codes) with the same TAC codes shall have the words "MULTIPLE DODAACS" applied to the outside of the container below the identification marking. This requirement applies to "kits" only if they are individual shipments that are consolidated into one container and sent to a single destination for multiple consignees. The size of the marking shall be as specified in 4.2.8 and shall be proportionate with the overall size of the consolidation container.

5.10.16 Expedited handling - not mission capable supply (NMCS) and 999 (see Figure 35). Requisitions and contracts identified as NMCS shipments shall have an NMCS code shown in the RDD block of the address label. The applicable code is 999 or the letter "N", which may be followed by the RDD expressed in the number of days from the date of requisition. NMCS condition 999 shipments shall be marked with two 999 labels, one placed adjacent to the address marking and one placed on the opposite side of the container. For NMCS conditions other than 999, one NMCS label shall be placed adjacent to the address marking and one on the opposite side of the container.

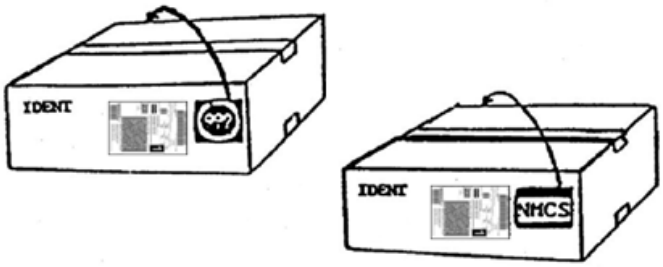

FIGURE 35. Examples of expedited handling labels.

Source: https://assist.dla.mil -- Downloaded: 2016-10-21T11:13Z
Check the source to verify that this is the current version before use.

5.10.17 Center of balance and lifting and tiedown points (see Figure 36). Handling information shall be marked as follows:

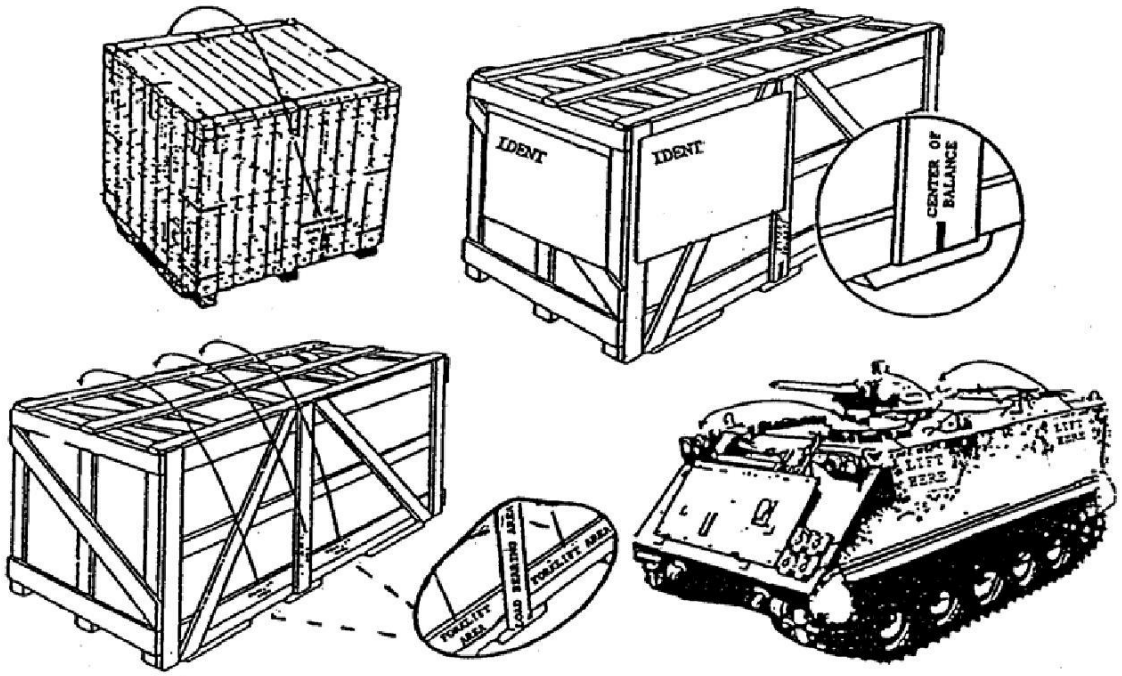

FIGURE 36. Center of balance, load bearing area, and lifting and tiedown points.

a. When the weight of an item is not evenly distributed, a 1 inch (25.4 mm) wide vertical line not less than 3 inches (76.2 mm) long locating the center of balance shall be extended up from the bottom edge of both sides of the item or its container, regardless of its length. The words "CENTER OF BALANCE" shall be clearly marked by any means that provides the required degree of legibility and durability in 1 inch (25.4 mm) letters above or alongside the line. The center of balance marking is not required on items such as SEAVANs which are not handled by forklifts.

b. Unit move cargo shipments have center of balance marking requirements that are in addition to the requirements of this standard. For example, all items/cargo 10 feet or longer shall be marked with a center of balance; the center of balance shall be marked with a "T" shape; the horizontal portion of the "T" shall contain the gross weight information; the vertical portion of the "T" shall contain the letters "CB" and the number of inches from the reference data line of the center of balance location shall also be indicated. Additional differences are applicable as specified in DTR 4500.9-R Part III, Appendix P.

c. On unboxed equipment and vehicles, the identification of lifting or tiedown provisions used for transport shall be stenciled in locations on the exterior of the equipment in letters not less than 1 inch (25.4 mm) in height. Accessories resembling provisions for lifting or tiedown shall be located or designed to avoid mistaken use as unacceptable for lifting or tiedown. On vehicles that are painted white, yellow, or another light color, the sling or lift points marking

Source: https://assist.dla.mil -- Downloaded: 2016-10-21T11:13Z
Check the source to verify that this is the current version before use.

shall be black, and the words “LIFT HERE” with an arrow pointing to the lifting eyes, placed above or alongside the lifting eyes. When space does not permit, the size of the arrow and lettering may be reduced accordingly.

d. CARC paint or ink shall be used, when appropriate.

5.10.18 Load bearing areas and forklift entry points (see Figure 36). When exterior shipping containers and their contents are subject to damage caused by uneven container stresses or strains, load bearing areas and lift points shall be marked on the exterior of the container. The words “LOAD BEARING AREA” shall be marked on opposite panels of the container directly over the load bearing area. The words “FORKLIFT AREA” shall be placed directly over the forklift entry points.

5.10.19 Axle weight marking. When axle weight marking is required, it shall be marked above each axle by stenciling or printing in 1 inch (25.4 mm) letters the words “AXLE WT” followed by the weight in pounds. The size of the lettering may be reduced, when necessary. When marking directly on the equipment, paint shall be soluble in paint thinner or mineral spirits. CARC paint or ink shall be used when appropriate.

5.10.20 Electrostatic discharge (ESD) sensitive devices (see Figure 37). All unit packs and intermediate and exterior containers of ESD sensitive devices that are susceptible to damage from ESD shall be marked as follows:

Unit pack symbol/label

Exterior and intermediate container label

FIGURE 37. ESD sensitive devices attention symbols and labels.

5.10.20.1 ESD unit packs. The unit packs shall be marked with the ESD sensitive devices attention label prescribed by ASTM D5445. The label shall include the ESD sensitive device symbol (triangle and reaching hand), the words “ATTENTION STATIC SENSITIVE DEVICES”, and the statement “HANDLE ONLY AT STATIC SAFE WORK STATIONS”. The symbol and lettering on the label shall be marked in black on a yellow background.

Source: https://assist.dla.mil -- Downloaded: 2016-10-21T11:13Z
Check the source to verify that this is the current version before use.

5.10.20.2 ESD intermediate and exterior containers. The containers shall be marked with the ESD sensitive devices attention label. The label used shall be sized proportionate to the size of the container. The ESD sensitive devices symbol and the words "ATTENTION OBSERVE PRECAUTIONS FOR HANDLING ELECTROSTATIC DISCHARGE SENSITIVE DEVICES" shall be marked in black on a yellow background. One label shall be placed on the identification-marked side of an intermediate container. Two labels shall be placed on an exterior container. One label shall be placed on the identification-marked side (or surface), and one label shall be placed on the opposite side (or surface). If the label is temporarily unavailable, intermediate and exterior containers shall be marked with the ESD sensitive devices symbol and the words "ATTENTION OBSERVE PRECAUTIONS FOR HANDLING ELECTROSTATIC DISCHARGE SENSITIVE DEVICES". The minimum size of the symbol shall be 0.625 inch (15.9 mm) measured vertically at the base of the triangle. When preprinted labels are not used, the symbol shall be printed in black or the same color as the identification marking, if other than black.

5.10.21 Materiel condition marking. As prescribed in TM 38-400/NAVSUP PUB572/AFJMAN 23-210/MCO 4450.14/DLAM 4145.12, materiel condition tags or labels shall be used whenever materiel may become mixed during storage or shipment within or between installations, or where physical evidence is necessary for materiel control to prevent duplicate inspections, or both. Implementation of this requirement by the respective departments and agencies will afford specific guidance concerning use and application. Tags and labels shall conform to the color, design, and material (to include the strength of the paperboard) of the Government produced item. Computer-generated, adhesive-backed labels may be used in conjunction with materiel condition tags. The following forms are authorized for use to indicate the condition(s) of the materiel and to identify the individual article or contents of the package, bundle, or container to which they are securely attached. These forms are not for indiscriminate use on serviceable materiel that presents no problem in storage and transfer. One tag or label shall be applied to the item and one shall be applied to the identification side of the shipping container. This application is in addition to the marking requirements in this standard. If multiple items or unit packs are placed in a single shipping container, then each item or unit pack shall be labeled or tagged.

a. DD Form 1574 (Serviceable Tag - Materiel) and DD Form 1574-1 (Serviceable Label - Materiel). Use for materiel that is serviceable (e.g., issuable without qualification, issuable with qualification, or priority issue). The tag and label shall have yellow borders and letters. When preprinted letters are not legible, black lettering may be used. To assist in identification, a 1 by 5 inch (2.54 by 12.7 cm) yellow stripe may also be printed on the back of each tag.

b. DD Form 1577-2 (Unserviceable (Reparable) Tag - Materiel) and DD Form 1577-3 (Unserviceable (Reparable) Label - Materiel). Use for materiel that is unserviceable (e.g., limited restoration, reclamation, reparable, or incomplete). The tag and label shall have green borders and letters. To assist in identification, a 1 by 5 inch green stripe may also be printed on the back of each tag.

Source: https://assist.dla.mil -- Downloaded: 2016-10-21T11:13Z
Check the source to verify that this is the current version before use.

c. DD Form 1577 (Unserviceable (Condemned) Tag - Materiel) and DD Form 1577-1 (Unserviceable (Condemned) Label – Materiel). Use for materiel that is unserviceable (e.g., condemned or scrap). The tag and label shall have red borders and letters. To assist in identification, a 1 by 5 inch red stripe may also be printed on the back of each tag.

d. DD Form 1575 (Suspended Tag - Materiel) and DD Form 1575-1 (Suspended Label – Materiel). Use for materiel that is suspended (e.g., stocks awaiting classification, returns awaiting classification, ammunition suitable for emergency combat use only, reclaimed items awaiting condition determination, quality deficiency exhibits, or stocks that are being held pending negotiation or litigation). The tag and label shall have brown borders and letters. To assist in identification, a 1 by 5 inch brown stripe may also be printed on the back of each tag.

e. DD Form 1576 (Test/Modification Tag - Materiel) and DD Form 1576-1 (Test/Modification Label - Materiel). Use for serviceable materiel that requires technical data marking, testing, alteration, modification, conversion, disassembly, etc., prior to issue. The tag and label shall have blue borders and letters. To assist in identification, a 1 by 5 inch blue stripe may also be printed on the back of each tag.

5.10.22 Hardness critical item (HCI). Unit packs, intermediate and exterior containers housing items identified on the parts list as “HCI” shall be stamped, stenciled, or labeled with the symbol “HCI” or the words “HARDNESS CRITICAL ITEM”. The HCI symbol or wording shall be placed on the identification-marked side and the end of the container to the left of the identification-marked side of rectangular containers, and on two equally spaced areas on the circumference of cylindrical containers. The HCI lettering shall be black in color, and the size of the lettering shall conform to the requirements of 4.2.8. On forest-green containers, the HCI lettering shall be either yellow or white in color.

5.11 Packing lists and documentation. There are essentially two kinds of packing list documentation required by this standard: 1) a content packing list for package contents not marked on the packaging, to include sets, kits, and assemblies; 2) a shipment packing list for a single-piece or multi-piece shipment unit to include applicable shipping information.

a. Packing lists shall be sealed in water resistant envelopes and secured to the exterior of the container, palletized load, or unpacked item in the most protected location (see Figure 38).

b. When specified in the contract or purchase order or when requested by the procuring activity, contractors shall place a packing list inside each container and to the outside of each container or palletized unit load.

5.11.1 Content packing lists for container/palletized load/unpacked items (see Figure 38). The packing list identifies the content-related information not marked on shipment packaging. The content-related information should include the NSN, nomenclature, part number, quantity, and unit of issue. The use of packing list protectors is recommended.

Source: https://assist.dla.mil -- Downloaded: 2016-10-21T11:13Z
Check the source to verify that this is the current version before use.

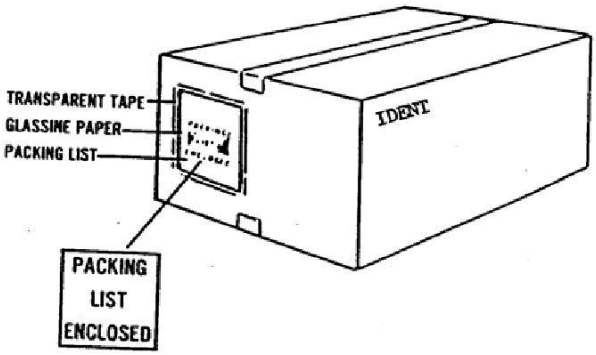

FIGURE 38. Packing list application.

a. Sets, kits, or assemblies composed of unlike items but identified by a single stock number or part number, shall have a packing list (identifying each item) securely attached to the end or side of each container. An additional packing list placed inside each container is recommended.

b. Sets with two or more exterior shipping containers of different stock numbered or part-numbered items require a master packing list. One copy of the master packing list shall be attached to container No. 1 and one copy placed inside container No. 1.

c. The contents of packages containing installation or assembly hardware such as brackets, connectors, nuts, bolts, and washers shall be listed in detail on the packing list.

d. A “kit contents list” shall be placed inside each “kit container” and shall not be included with the packing list on the outside of the exterior container. The kit contents list may be placed on a DD Form 250 or on a locally prepared list. This list shall not be included as part of the exterior shipping container packing list.

e. Packing lists may include lists of the serial numbers and UIIs prepared in accordance with 5.4.1.2.1 and 5.4.1.2.2.

f. No exterior packing list documentation (see Figure 38) is required for containers or palletized unit loads of like items or single-item packs when content information, to include all included serial numbers and/or UIIs, are marked on a label attached to the boxes/load, lithographed on the boxes, or printed on the boxes (see Figure 34). For FMS shipments (see 5.6), exterior documentation is always required except for controlled, sensitive, or classified items.

5.11.2 Shipment packing list and DD Form 1384 (TCMD). A shipment packing list and TCMD as identified below shall be attached to the No. 1 piece or lowest numbered exterior container or palletized unit load of each shipment unit. For shipment units partialed or split into shipment increments in accordance with DTR 4500.9-R, Part II, Appendix L, the shipment packing list and TCMD (as applicable) shall be attached to the lowest numbered piece of each

Source: https://assist.dla.mil -- Downloaded: 2016-10-21T11:13Z
Check the source to verify that this is the current version before use.

shipment unit increment. A packing list envelope may contain a content packing list (see 5.11.1), a shipment packing list, serial number lists, and a DD Form 1384 (TCMD).

a. DD Form 250 (Material Inspection and Receiving Report). A DD Form 250, when prepared in accordance with contract requirements using the DFAR**S**, Appendix F shall be used as a shipment packing list. Copies shall be in addition to those required for standard distribution as specified in the DFARS and each shall be marked "Packing List". All applicable data shall be included on the form. When a DD Form 250 is prepared for a customer direct shipment, it shall include issue/receipt bar code marks (see 5.5).

b. DD Form 1155 (Order for Supplies or Services/Request for Quotation). A DD Form 1155, when used to order supplies, shall be attached to a vendor's commercial packing list and applied to applicable exterior containers identified in 5.11.2.

c. DD Form 1149 (Requisition and Invoice Shipping Document). A DD Form 1149 may be used as a single item or multiple item packing list for non-MILSTRIP DoD shipments and shall be applied, when applicable, in the same manner as described for the forms in 5.11.2.1 through 5.11.3.

d. DD Form 1348-1A. The DD Form 1348-1A shall be used by DoD shippers and as specified in the contract. It shall be prepared in accordance with 5.12 and DLM 4000.25-1, Chapter 5 and attached IAW the following 5.11.2 numbered subparagraphs.

e. DD Form 1384 (Transportation Control and Movement Document (TCMD). A TCMD shall be completed when required by and in accordance with DTR 4500.9-R, Part II, Cargo Movement, Appendix M, with all entries except for DTS carrier information. It shall be inserted in the packing list envelope on the No. 1 container for those shipment units forwarded to a CONUS CCP.

5.11.2.1 Shipment units containing a single DD Form 1348-1A (see Figure 39). For single line-item shipments, attach a copy of the DD Form 1348-1A to the materiel in shipping container No. 1 or palletized unit load No. 1. In addition, enclose at least one copy of the form in a water-resistant envelope attached to the outside of the exterior container or palletized unit load as noted in 5.11.2. When a storage container is used as a shipping container, the copy attached to the material in container No. 1 shall be enclosed with the copy attached to the outside of container No. 1.

5.11.2.2 Shipment unit containing multiple DD Forms 1348-1A. For multiple line item shipments, place a copy of each DD Form 1348-1A in a water-resistant envelope so the NSN identification and requisition information are visible and attach the envelope to the materiel for each respective requisition. When a polyethylene bag is used to group single line items for packing, the same bag shall contain the DD Form 1348-1A. At least one copy of the form, applicable to each requisition, shall also be placed in a water-resistant envelope attached to the outside of the exterior container or palletized unit load as noted in 5.11.2.

Source: https://assist.dla.mil -- Downloaded: 2016-10-21T11:13Z
Check the source to verify that this is the current version before use.

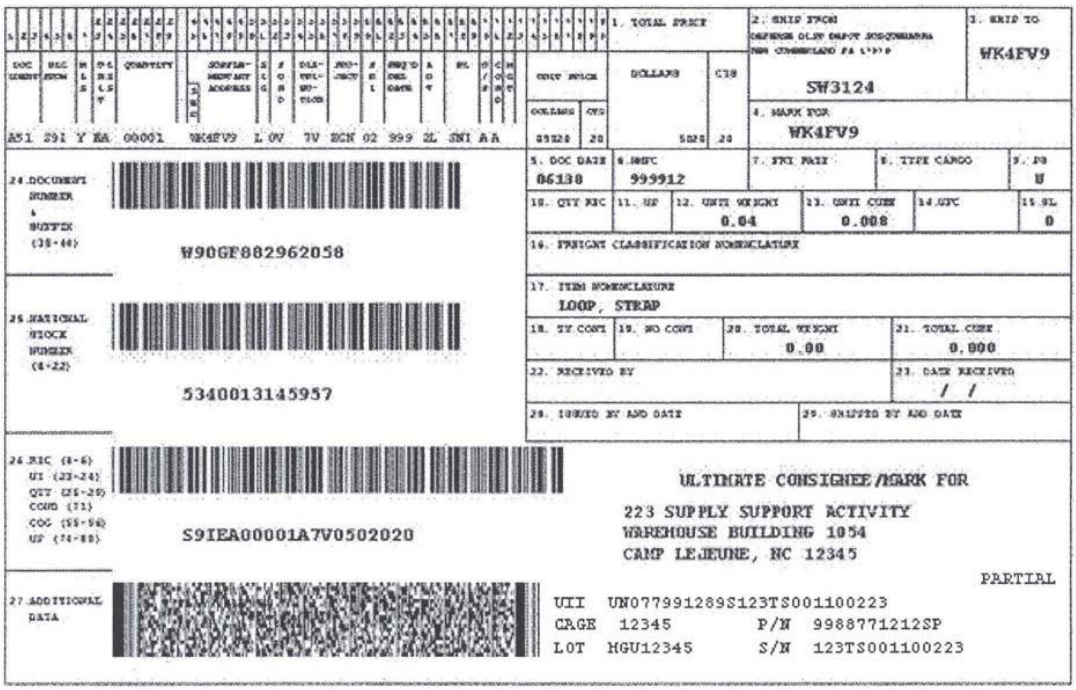

FIGURE 39. Sample of a DD Form 1348-1A, Issue Release/Receipt Document (IRRD).

5.11.2.3 Alternate method of attaching DD Forms 1348-1A to fiberboard boxes. When shrink or stretch film is used to consolidate multiple item items, one copy of the DD Form 1348-1A shall be attached to the materiel for each line item. For single items, two copies of the applicable form shall be placed under the shrink film in such a manner as to be read. This method is not authorized for FMS shipments.

5.11.2.4 Method of attaching accompanying documentation for shipments of vehicles. A minimum of two copies of the DD Form 1348-1A or DD Form 250 shipping document and DA Form 3256, preservation/depreservation guide (if required) shall be provided and shall be securely attached in or on the vehicle as follows:

a. Interior. Place one copy of the shipping document and one copy of the preservation/ depreservation guide inside a sealed bag or water-resistant envelope. Attach the bag or envelope to a conspicuous location inside the vehicle.

b. Exterior. Place the remaining copy of the shipping document and preservation/depreservation guide, unit packed as specified above, on the vehicle adjacent to the shipping address and securely attach the bag or envelope.

5.11.3 Exceptions to the use of exterior container documentation. With the following exceptions, exterior container documentation is required on all contractor, DoD, and FMS shipments.

Source: https://assist.dla.mil -- Downloaded: 2016-10-21T11:13Z
Check the source to verify that this is the current version before use.

a. For controlled, sensitive, classified, and pilferable items (except for FMS shipments), the shipping documentation shall be placed inside all containers rather than on the outside. For classified shipments, marking that indicates the classified nature of the materiel and its security classification shall not appear on the exterior of each container if it will identify the classified nature of the shipment.

b. For DLA Troop Support multiple container shipments of clothing and textile (C&T) items, the packing list shall be placed inside the last container to be loaded for each shipment. The words "PACKING LIST HERE" shall be marked on the container (see 5.1.2.f.(3)).

5.12 DD Form 1348-1A bar code data requirements (see Figure 39). The following encoded data are required on the DD Form 1348-1A.

5.12.1 DD Form 1348-1A linear (Code 39) bar codes.

a. Linear (Code 39) bar coded data with human-readable interpretation for issue to Services/agencies.

(1) Document number and suffix assigned to the requisition for a maximum of 14 characters should be bar coded in block 24.

(2) The 13 digit national stock number (NSN) and 2 additional (Add) codes, as applicable, per DLM 4000.25-1, Appendix 2.5.2, should be bar coded in block 25. In the absence of the NSN, the CAGE and Part Number shall be used for a maximum of 15 characters.

(3) The 3 character "from" routing identifier code (RIC), 2 character unit of issue (UI) code, 5 digit zero filled quantity (QTY), 1 character condition code (COND), blank or last 2 characters of the distribution code (DIST), and a 7 digit or 11 digit zero-filled unit price (UP) showing dollars and cents with no decimal bar coded in block 26. The bar code shall have a fixed length of 20 or 24 characters to include leading zeros and spaces depending on the implemented version of the unit price annotation noted in DLM 4000.25-1, Appendix 3.48.

b. Linear (Code 39) bar coded data, with human-readable interpretation requirements, for issue to FMS/Grant Aid customers.

(1) Block 24. The document number and suffix assigned to the requisition for a maximum of 15 characters should be bar coded.

(2) Block 25. The 13 digit national stock number (NSN) and 2 additional (Add) codes, as applicable, per DLM 4000.25-1, Appendix 2.5.2, should be bar coded. In the absence of the NSN, the CAGE and part number shall be used for a maximum of 15 characters.

Source: https://assist.dla.mil -- Downloaded: 2016-10-21T11:13Z
Check the source to verify that this is the current version before use.

(3) Block 26. The 2 character unit of issue (UI) code, 5 digit zero filled quantity (QTY), 1 character condition code (COND), a 7 digit or 11 digit zero-filled unit price (UP) showing dollars and cents with no decimal, and the first position and last 3 positions of supplementary address DODAAC should be bar coded. The bar code shall have a fixed length of 19 or 23 characters to include leading zeros and spaces depending on the implemented version of the unit price annotation noted in DLM 4000.25-1, Appendix 3.48. For transfers to DLA Disposition Services, Block 26 shall not contain bar code data in accordance with DLM 4000.25-1, Appendix 3.49.

c. The application of linear bar codes on the DD Form 1348-1A and its Continuation Page shall be in accordance with 5.4.2.6 and 5.4.2.2. A data check character is not used. The following requirements and exceptions apply:

(1) The height of the bar code should be at least 0.5 inch (12.7 mm) and shall be no less than 0.25 inch (6.35 mm), regardless of the density (characters per inch).

(2) Blocks 24 and 25. The length of the bar code shall not be greater than 4 inches (10.2 cm). Each bar code shall have 15 characters. When there is an absence of any character(s) (less than 15) within these 2 bar codes, encoded spaces shall be used as fillers.

(3) Block 26. The length of the bar code shall not be greater than 4.5 inches (11.4 cm). Encoded spaces shall be used as fillers for any unknown, or unencoded, data characters.

(4) Block 27. The length of the bar codes shall not be greater than 4 inches (10.2 cm) for serial numbers that may have up to 30 characters. The narrow element X-dimension should be at least 0.010 inch (10 mils or 0.254 mm) but shall not be less than 0.007 inch (7 mils or 0.178 mm) for these high-density bar codes. The wide to narrow ratio should be 3 to 1 but shall not be less than 2 to 1.

(5) The American Standard Code for Information Interchange (ASCII) characters encoded shall consist of the standard uppercase characters, numbers, and symbols identified in ISO/IEC 16388, Table 1 (i.e.[A to Z][1 to 9][hyphen][period][space][$][/][+][%][stop/start (*)]. The full ASCII 128 character set shall not be used to encode information. Also, scanners and imagers shall not be configured to decode the full ASCII 128 character set for linear (Code 39) bar codes.

5.12.2 <u>DD Form 1348-1A 2D (PDF417) bar code</u>. The 2D (PDF417) bar code shall be used in block 27 of the DD Form 1348-1A or a DD Form 1348-1A Continuation Page to enter additional data for internal use by the shipping/receiving activity in accordance with DLM

Source: https://assist.dla.mil -- Downloaded: 2016-10-21T11:13Z
Check the source to verify that this is the current version before use.

4000.25-1, Chapter 5 and Appendix 1.35 and 1.36. The bar code shall encompass all the data elements in blocks 24 through 27, including UIIs, and shall be used in addition to the linear (Code 39) bar codes. See Figures 39 and 40.

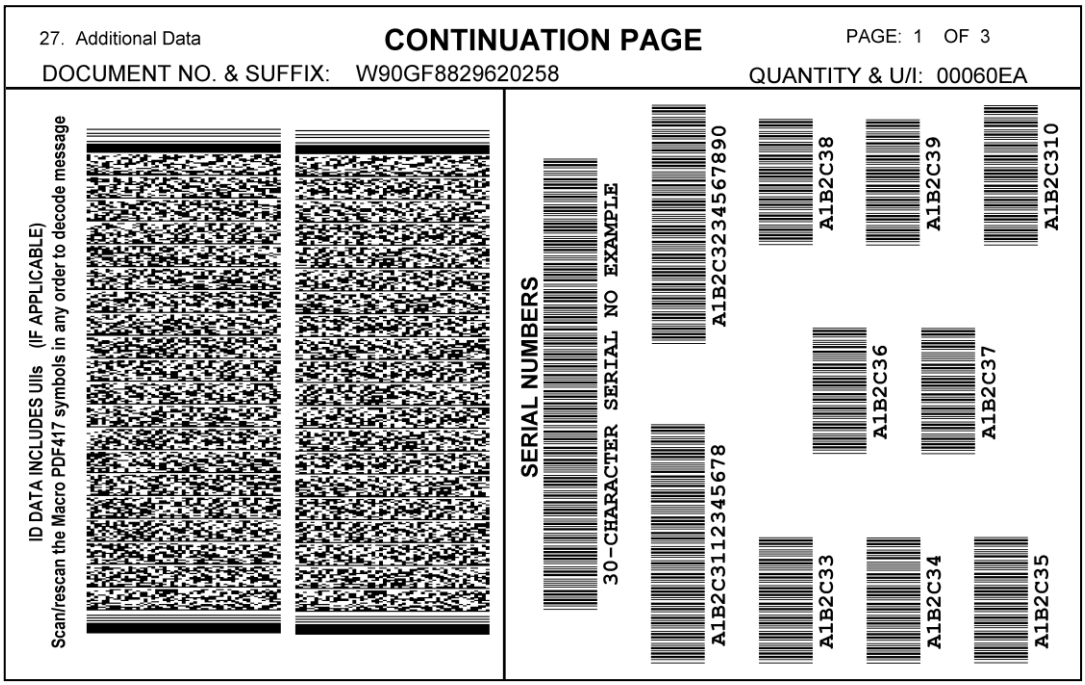

FIGURE 40. Sample of a DD Form 1348-1A, Issue Release/Receipt Document (IRRD), Continuation Page (page 1 of 3 and not actual size).

5.13 Hazardous materials (HAZMAT). The marking and labeling requirements for shipment and storage of HAZMAT, including ammunition and hazardous wastes, shall be accomplished as stated in this standard and in the applicable regulatory documents.

5.13.1 HAZMAT marking and labeling requirements. Depending on the mode of transportation, HAZMAT shall be marked and labeled in accordance with Title 49 CFR, ICAO Technical Instructions for the Safe Transportation of Dangerous Goods by Air, IATA Dangerous Goods Regulations, the IMO IMDG Code for water shipments, and AFMAN 24-204(INTERSERVICE)/TM 38-250/NAVSUP PUB 505/MCO P4030.19J/DLAI 4145.3 for military air shipments, as applicable. Proper shipping names (PSNs), United Nations (UN) or North American (NA) HAZMAT identification numbers, IATA/ICAO temporary identification (ID) numbers, DOT assigned EX (explosives) numbers (for ammunition items with no assigned NSN/DODIC), HAZMAT classification warning labels, and UN Performance-Oriented Packaging certification marking shall be placed on the exterior container, as required. Government-owned Class I (explosives) that were packaged, marked and labeled prior to 1 January 1990 and destined for surface shipment or military air shipment need not be remarked.

5.13.2 Proper shipping name and identification number (see Figure 41). The PSN and NA or UN HAZMAT identification number shall be marked on the exterior shipping container.

Source: https://assist.dla.mil -- Downloaded: 2016-10-21T11:13Z
Check the source to verify that this is the current version before use.

PSNs for n.o.s. items shall be followed by a technical name in parentheses. The PSNs and identification numbers are listed in Title 49 CFR, Part 172.101, latest revision, and in AFMAN 24-204(INTERSERVICE)/TM 38-250/NAVSUP PUB 505/MCO P4030.19J/DLAI 4145.3, Attachment 4. North American numbers are not authorized for international shipments. The applicable international modal document shall be used to determine the UN PSN and UN HAZMAT identification number for international shipments.

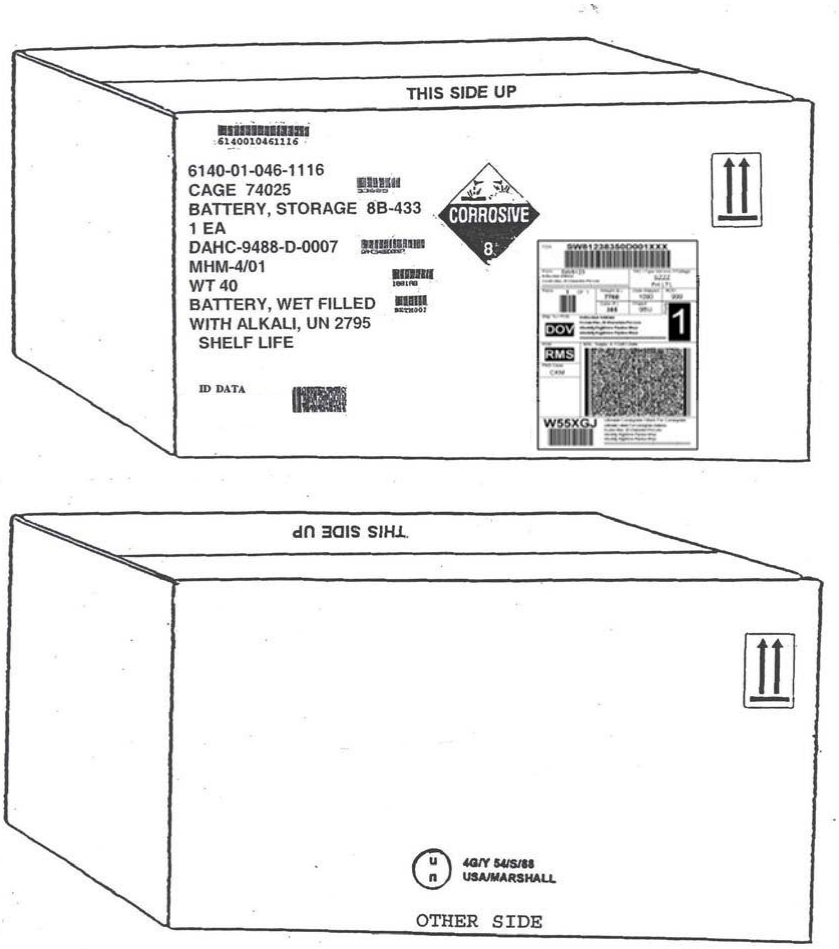

NOTE: "SHELF LIFE" is a placeholder for dates (see 5.10.1).

FIGURE 41. Example of exterior container HAZMAT marking and labeling requirements.

5.13.3 Marking and labeling of an assorted-items pack containing HAZMAT. When an assorted-items pack contains HAZMAT, the PSNs, with applicable ID numbers, shall be marked on each applicable container in the assorted-items pack. They shall also be listed on the identification-marked side of the assorted-items pack. Applicable HAZMAT classification warning labels for each class of material contained in the assorted-items pack shall also be applied on the outside surface.

Source: https://assist.dla.mil -- Downloaded: 2016-10-21T11:13Z
Check the source to verify that this is the current version before use.

5.13.4 Marking and labeling of air and water shipments. Marking and labeling requirements for shipments of HAZMAT by domestic commercial air are specified in Title 49 CFR and by international air in the ICAO Technical Instructions and the IATA Dangerous Goods Regulations. When shipment is by military airlift or contract carrier, the requirements of AFMAN 24-204(INTERSERVICE) TM 38-250/NAVSUP PUB 505/MCO P4030.19J/DLAI 4145.3 shall apply. In addition, for all military air shipments, the outer container of combination packages, having inner receptacles that contain a liquid HAZMAT, shall also be marked "AIR ELIGIBLE" to verify that either the inner container(s) or the outer container meet the internal pressure requirements for air eligibility. This required marking is in addition to any applicable UN Performance-Oriented Packaging certification marking (see 5.14.2.f and Figures 41 and 42). When known, the tested kilopascals (kPa) may be marked below the "AIR ELIGIBLE" wording. A kPa is the international unit for measurement of internal pressure. The formula for converting to kilopascals is (psi X 6.89 = kPa). The words "AIR ELIGIBLE" are not required for single containers of HAZMAT because the kPa is already a part of the UN Performance-Oriented Packaging certification code. The marking and labeling requirements for the shipment of HAZMAT by vessel are specified in Title 49 CFR and in the IMO IMDG Code. The IMO IMDG Code is used for overseas shipments by vessel.

5.13.5 Identifying containers and packagings (see Figure 41). Containers or configurations (packagings) shall be identified as complying with containers identified in the UN Performance-Oriented Packaging standards or Federal or military specifications. When a container that is manufactured to a Government approved drawing, or specification has successfully passed all applicable UN Performance-Oriented Packaging certification tests, both the UN Performance-Oriented Packaging certification marking (see 5.13.5.1) and applicable Government approved drawing or container specification marking shall be applied.

5.13.5.1 DOT specification and UN Performance-Oriented Packaging certification marking (see Figures 41 and 42). When a container complies with a UN Performance-Oriented Packaging standard, the container shall be marked as required by the applicable specification conforming to Title 49 CFR, Part 178. This is normally the responsibility of the container manufacturer. The symbol indicated in Figure 41 shall be the registered symbol of the contractor, packaging manufacturer or DoD/DOT-approved testing facility, or combination thereof, who certified the package as successfully passing all of the required tests. For packages with a gross mass over 66 pounds, the markings or a duplicate thereof must appear on the top or on a side of the packaging. The UN symbol and the size of the lettering shall also conform to the requirements of Title 49 CFR, Part 178.

5.13.5.2 Specialized containers (see Figure 41). When a container is manufactured to a Government-approved drawing or specification, it shall be identified as such. When the complete package, including cushioning and blocking materials, inner container(s), and the shipping container, is covered by a detailed procedure in a specification or Government-approved drawing, the applicable specification or packaging drawing shall be marked on the container in an inconspicuous location, such as the bottom of the container. This additional marking need not be applied to containers with nameplates when the contents are specific to the container (e.g., an MK 46 Torpedo in an MK 535 container) or to packages when the entire packaged configuration is described by the NSN which is also part of the identification marking.

Source: https://assist.dla.mil -- Downloaded: 2016-10-21T11:13Z
Check the source to verify that this is the current version before use.

These type containers may be used to ship HAZMAT domestically and internationally when covered by a competent authority approval (CAA) or the packaging has successfully passed all applicable UN Performance-Oriented Packaging certification tests and is so marked. When the authorized packaging configuration has successfully passed the UN Performance-Oriented Packaging certification test and the packaging is marked with the applicable certification marking, and when military requirements such as detailed drawings specify over-packing of this configuration, then the testing and subsequent marking of the outer container are unnecessary.

(un) 4G/X6/S/92
USA/***

where

(un)	is the symbol used to CERTIFY that packaging complies with UN recommendations for the item and packaging.
4G	is the UN recognized symbol for a fiberboard box which has been successfully tested to UN recommended drop, stack, vibration, and water absorptive performance criteria.
X	is a letter designating the packing group for which the fiberboard box configuration has been successfully tested. X is used for Packing Group I. Y is used for Packing Group II. Z is used for Packing Group III. Unless the requirements of Title 49 CFR, 173.24a, are met, items of a lesser packing group may be packaged in a box, marked, and tested to a higher packing group provided the tested weight is not exceeded.
6	is the maximum authorized gross weight for solids, expressed in kilograms, for which the packaging has been tested.
S	indicates packaging inner contents are either solids or other inner containers (e.g., cans or bottles).
92	is the last two digits of the year during which the packaging was manufactured.
USA	is State (country) authorizing allocation of the mark.
***	is the symbol of the party that is responsible for ensuring that the UN recommendations have been met. The appropriate symbol shall be the contractor's authorized symbol or as stated in the contract, order purchase agreement, specification, special packaging instruction, or other written direction by the packaging design agency or by higher headquarters.

NOTE: Additional certification information can be found in Title 49 CFR, Parts 178.500 through 178.503.

FIGURE 42. Example of UN Performance-Oriented Packaging certification marking for a fiberboard box.

Source: https://assist.dla.mil -- Downloaded: 2016-10-21T11:13Z
Check the source to verify that this is the current version before use.

5.13.5.3 DOT special permits (SPs). When a DOT-SP is applicable, the DOT-SP number (e.g., DOT-SP 7605) shall be placed near the PSN and any other required cautionary marking. DOT-SPs shall not apply to international shipments unless the HAZMAT is exempted from UN Performance-Oriented Packaging certification marking requirements.

5.13.5.4 Certification of equivalency (COE). When a COE has been issued, the container certification number shall be applied near the PSN and any other cautionary marking. COEs shall not apply to international shipments, unless the HAZMAT is exempted from UN Performance-Oriented Packaging certification marking requirements.

5.13.5.5 Competent authority approval (CAA). The competent authority, which is DOT, may grant permission to use a package without the UN Performance-Oriented Packaging certification tests. If required by the CAA, the approval number shall appear on the package in association with the PSN and ID number. All requests for CAAs shall be documented as specified in Title 49 CFR and Joint Regulation DLAD 4145.41/AR 700-143/SECNAVINST 4030.55/AFJI 24-210 (I)/MCO 4030.40.

5.13.5.6 Overpacked and assorted-items pack containers of HAZMAT. When the authorized packaging configuration has successfully passed the UN Performance-Oriented Packaging certification tests and the packaging is marked with the applicable UN Performance-Oriented Packaging certification marking, and when military requirements specify overpacking of the packaging configuration in an outer container (placing a fiberboard box in a wood box), then the testing and subsequent marking of the outer container is unnecessary. In addition to the required marking, conformance with UN Performance-Oriented Packaging recommendations shall be shown by marking the outer container with the word: “OVERPACK”. This marking, however, is not sufficient for combination packages consisting of overpacked inner packages which contain liquids and are transported by military aircraft. For all military air shipments containing HAZMAT liquids, the outer container shall be marked “AIR ELIGIBLE” to indicate that either the inner receptacles or the outer container meet the internal pressure requirements for air eligibility. An assorted-items pack container comprised of performance-tested packagings shall also be marked with this information to certify conformance with UN Performance-Oriented Packaging recommendations. When two or more packages of compatible HAZMAT are placed within the same outside container or overpack, the outside container or overpack shall be labeled as required for each class of HAZMAT contained therein.

5.13.6 Documentation for HAZMAT. The shipper is responsible for the completion of a Shipper’s Declaration for Dangerous Goods form for each and every military air shipment containing dangerous goods as specified in inter-Service manual AFMAN 24-204(INTERSERVICE)/TM 38-250/NAVSUP PUB 505/MCO P4030.19J/DLAI 4145.3, which provides instructions on how to properly complete the form.

5.13.6.1 Existing palletized unit loads of HAZMAT. Existing palletized unit loads of HAZMAT in the DoD stockpile identified as having passed the UN Performance-Oriented Packaging certification testing requirements shall have the UN Performance-Oriented Packaging certification marking applied to placards placed on two opposite sides of the pallet load in lieu of marking each container. This rule also applies to material having different DOT and UN PSNs.

Source: https://assist.dla.mil -- Downloaded: 2016-10-21T11:13Z
Check the source to verify that this is the current version before use.

5.13.7 Flash point marking (see Figure 43). All unit packs and intermediate and exterior shipping containers packed with flammable liquids (flash point of not more than 60 degrees Celsius (C) or 140 degrees Fahrenheit (F)) shall be marked with the flash point of the material. The flash point shall be preceded by the words “FLASH POINT” and shall be followed by the letter “C” or “F” as appropriate. The flash point marking may be shown in degrees C, F, or both and shall be applied in a conspicuous location on the identification-marked side of the container. If space is not available on the identification-marked side, the required HAZMAT marking, labeling, and the flash point marking may be placed on the opposite side. The size of the lettering shall be proportionate to the available marking space. The flash point shall be determined by using the testing methods prescribed in Title 49 CFR.

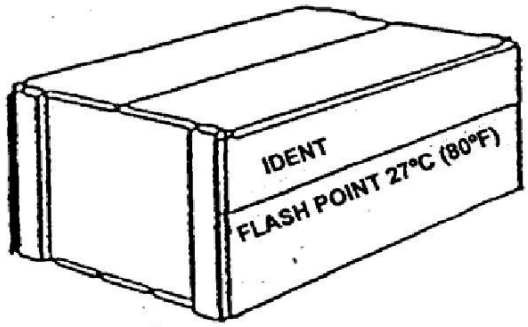

FIGURE 43. Flash point marking.

5.13.8 Specific hazards.

5.13.8.1 Asbestos (see Figure 44). Containers of asbestos and products containing asbestos which may be expected to produce dust in excess of the Occupational Safety and Health Administration's (OSHA) exposure limits during handling, processing, storage, disposal, or transportation shall be marked with a warning label, as specified in OSHA's Title 29 CFR.

5.13.8.2 Polychlorinated biphenyls (PCB) (see Figure 44). As required by the Environmental Protection Agency (see Title 40 CFR), unit packs and intermediate containers, including containers that serve as shipping containers of waste PCB, shall have a PCB label affixed to them.

5.13.9 Hazardous chemical warning label. Hazardous materials shall require a chemical warning label as specified in Title 29 CFR, Part 1910.1200, Hazard Communication Standard. When the manufacturer's warning label has been removed or obliterated, or if the product is poured from one container into another, the DoD standard hazard warning label (DD Form 2521 or DD Form 2522 (smaller version)) shall be applied to the unit container. The warning labels are available in the CD-ROM version of the Hazardous Materials Information System (HMIS). If a container includes more than one unit pack, such as a container of six aerosol cans that have a unit issue of “one each”, then the warning label shall not be applied to the individual unit packs (each aerosol can) that comprise the container until the container itself is opened.

Source: https://assist.dla.mil -- Downloaded: 2016-10-21T11:13Z
Check the source to verify that this is the current version before use.

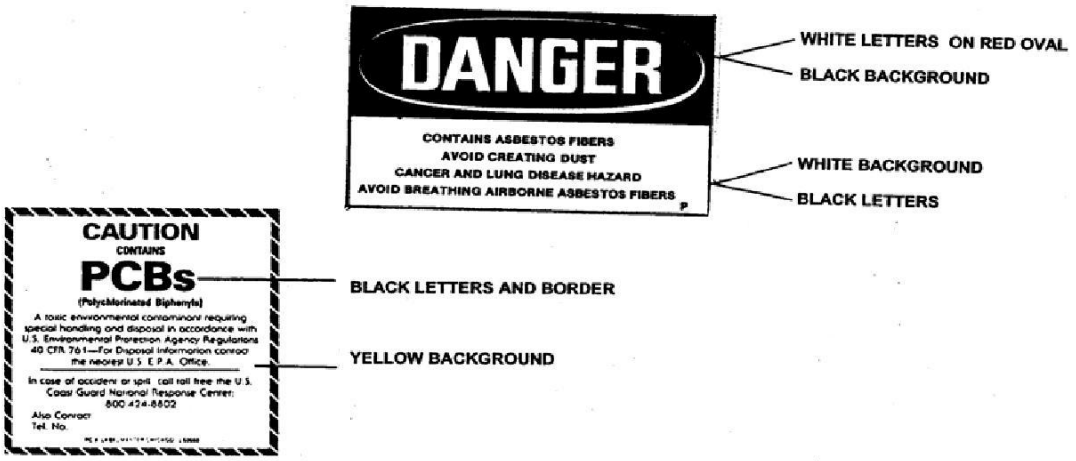

FIGURE 44. Asbestos and PCB HAZMAT labels.

5.13.10 Kits containing HAZMAT. Kits that contain hazardous components in small quantities such as adhesives, solvents, inks, paints, and other flammable liquids, or chemical kits as defined by Title 49 CFR, shall be marked and labeled in accordance with the requirements of Title 49 CFR and the applicable international document (e.g., ICAO, IMO, etc.). When one or more components in a kit are classified as a HAZMAT, the container shall be marked and labeled as specified in 5.13.2. The UN Performance-Oriented Packaging certification marking is not required when the individual kits meet the requirements of Title 49 CFR, Part 173.4, and the applicable modal requirements.

5.13.11 Radioactive material marking and labeling requirements. Containers of radioactive materials prepared for shipment shall be marked and labeled in accordance with applicable sections of Title 49 CFR and the applicable international document (e.g., ICAO Technical Instructions, IMDG Code, etc.). The applicable radioactive HAZMAT classification warning labels shall be applied on two opposite sides of the shipping container for domestic and international shipments. The applied radioactive label shall have the following information entered in the blank spaces in accordance with Title 49 CFR:

a. Contents. The name of the radionuclides.

b. Number of becquerels expressed in appropriate becquerel units.

c. Transport index. A dimensionless number (rounded up to the first decimal place) which designates a degree of control to be exercised by the carrier during transportation. It applies to radioactive materials requiring radioactive II or III labels only.

5.13.11.1 Nuclear Regulatory Commission (NRC) interior/storage container label (see Figure 45). Containers of radioactive materials in storage shall be labeled in accordance with Title 10 CFR (see 5.13.11.4 for exceptions). When a container of radioactive material has been labeled as specified in Title 49 CFR, the NRC label shall be removed prior to shipment to preclude any confusion for personnel transporting or receiving the container. Once the container

Source: https://assist.dla.mil -- Downloaded: 2016-10-21T11:13Z
Check the source to verify that this is the current version before use.

is received, the proper NRC label shall again be affixed to the container. Exceptions to the use of the NRC interior/storage container label are contained in 5.13.11.4. These interior/storage container labels may be either locally produced or procured. However, they shall contain all the information required for each radioactive material. The NRC labels shall be applied to the identification-marked side of the unit pack or intermediate container and shall bear the radiation caution symbol and the words “CAUTION: RADIOACTIVE MATERIAL” or the words “DANGER: RADIOACTIVE MATERIAL”, as appropriate. They shall also include relevant information such as radiation levels, kinds of material, estimate of activity, estimated activity date, and mass enrichment. The label size shall be at least 2 by 2 inches (50.8 by 50.8 mm) but may be larger to accommodate larger packages.

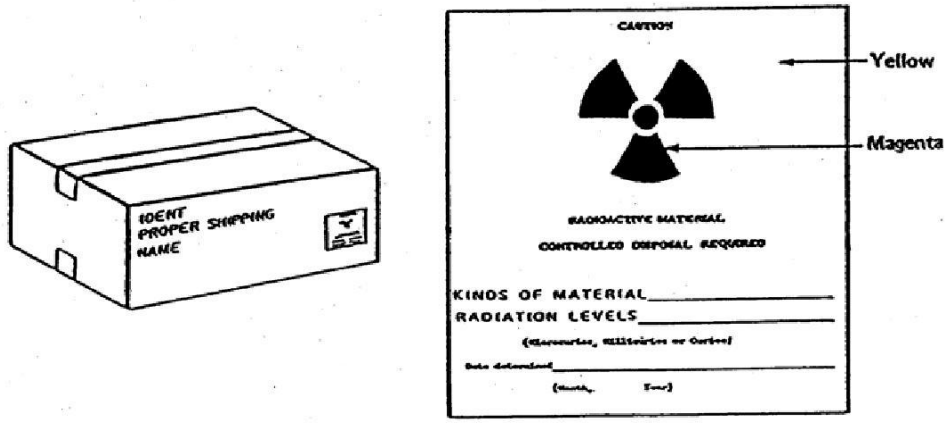

FIGURE 45. NRC interior/storage container label.

5.13.11.2 Radioactive materials requiring an NRC label. Any commodity or item containing radioactive material in excess of the amounts shown in Title 10 CFR, Part 20, Appendix C, require an NRC label. Radionuclides other than those listed in Title 10 CFR or mixtures of beta emitters of unknown composition also require an NRC label.

5.13.11.3 Transportation of radioactive materials. Shipping containers of radioactive material shall be marked and labeled as specified in Title 49 CFR for domestic shipments, applicable international documents such as the ICAO or IMO for international shipments, or the AFMAN 24-204(INTERSERVICE)/TM 38-250/NAVSUP PUB 505/MCO P4030.19J/DLAI 4145.3 for military air shipments.

5.13.11.4 Exceptions to the use of radioactive material labels. When determining the appropriate radioactive material labels to be applied to containers in storage and to those being prepared for shipment, the following exception data shall be considered. The NRC interior/storage container label is not required when limited quantities of radioactive materials, devices, and low specific activity radioactive devices specified in Title 49 CFR, Part 173; when materials are processed in accordance with the general license provision of Title 10 CFR, Parts 31 and 40; when materials are exempted by the provisions of Title 10 CFR; when alternate marking is authorized by the NRC in a specific license; or when materials are otherwise exempted by Federal regulations. Any outer package that contains radioactive material need not

Source: https://assist.dla.mil -- Downloaded: 2016-10-21T11:13Z
Check the source to verify that this is the current version before use.

be labeled in accordance with the provisions in Title 10 CFR, Part 20, if the package is in transport or is ready for transport, and the packaging/labeling/marking is in accordance with the DOT regulations (i.e., Title 49 CFR, Part 173). Radioactive hazardous warning labels are not required for manufacturing or processing equipment such as nuclear reactors, their components, piping, and tanks or when packages are exempt from DOT labeling under Title 49 CFR, Parts 173.421, 173.422, 173.424, or 173.425; when specific exemptions are granted by DOT; and as specified in AFMAN 24-204(INTERSERVICE)/TM 38-250/NAVSUP PUB 505/MCO P4030.19J/DLAI 4145.3.

5.14 Ammunition and explosives. Ammunition and explosives marking is specified herein or is specified by the item packaging drawings or Special Packaging Instructions as approved by the cognizant activity (see 5.14.8 order of precedence). General requirements for marking, marking materials, and methods are in 4.2, with the exception of 4.2.2. For DD Form 250 and DD Form 1348-1A requirements see 5.5, 5.11.2, and 5.12.

5.14.1 Identification marking on unit packs, intermediate containers, and unpacked items. The following physical identification marking shall be applied in accordance with 4.2.1.2 and 4.2.1.4 on unit packs and intermediate containers (defined as inner packaging in Title 49 CFR) and unpacked items:

a. NSN/NATO stock number. The NSN/NATO stock number shall be marked only when applicable, for example when specified in contract drawings.

b. DODIC/NALC. The DODIC/NALC shall be marked if applicable. If an NSN/NATO stock number is marked, the DODIC/NALC shall follow on the same line if possible.

c. Quantity/unit of issue (UI). The quantity always precedes the item description (nomenclature) on the same line. The UI is only marked when it is other than each; abbreviations (e.g. FT, LB, etc.) may be used (see Table I).

NOTE: The quantity printed on the Ammunition/Explosives Packaging Label (see 5.14.5) may be identified with an ANSI ASC X12.3 Data Element 355 (Unit or Basis for Measurement) code, which could be different from the UI abbreviation.

d. Item description (nomenclature). The item description (nomenclature) may be marked on more than one line if required due to space limitations.

e. Management control number (MCN) or part/manufacturer (PN/MFR). If a DODIC/NALC is not marked and an NSN/NATO stock number is not marked, a locally assigned MCN or PN/MFR shall be marked below the item description (nomenclature).

f. Lot number and serial number (when serial number is assigned). The word “LOT” shall precede the lot number and “SER” shall precede the serial number.

Source: https://assist.dla.mil -- Downloaded: 2016-10-21T11:13Z
Check the source to verify that this is the current version before use.

NOTE: Words such as “NSN/NATO Stock Number”, “Item Description”, and “Quantity” shall not be included as part of the identification marking. As applicable, the NSN/NATO stock number and DODIC/NALC marking shall be located on one long side of the pack/container/item occupying the first line. The quantity, unit of issue (as applicable), and item description (nomenclature) shall be marked on the next line. The MCN or part number/manufacturer (PN/MFR), as applicable, is then marked on the next line below the item description (nomenclature). Marking a transparent bag is not required if all marking on the unit pack(s) or intermediate container(s) are legible through the bag. For unpacked separate-loading projectiles or unpacked bombs in a unit load, see (5.14.4.1) for the unit load identification marking requirements.

5.14.2 Identification marking on unpacked items (not in a unit load) and exterior containers (see Figures 46 and 47). The identification marking shall include all the information marked on the inner containers or unpacked items and the following additional marking:

a. Weight. The capital letters “WT” shall precede the numerical gross weight in pounds. Fractional weights shall be rounded up to the next whole pound. The numerical weight shall be followed with the abbreviation for pounds “LBS” in capital letters.

b. Proper shipping name (PSN) and United Nations (UN) HAZMAT identification number (or North American (NA) numbers) shall be marked on the package in a clear area away from any other box marking. For cylindrical containers, the PSN/UN number shall be marked lengthwise on the container and separated from all other marking. The PSN/UN number shall be as shown in the Joint Hazard Classification System (JHCS) for the specific NSN being packaged or as assigned by a proper classification authority. It shall be noted that NA numbers are not authorized for international shipments. For both domestic and international shipments, PSNs for n.o.s. items shall be followed by a technical name in parentheses. The PSN is required even though it may be identical to the item description (nomenclature).

c. Special precautionary marking. Special precautionary marking and required HAZMAT labels for the commodity described by the PSN shall be applied in accordance with Title 49 CFR.

d. Lot number and serial number (marked on side of container). The lower-most marking on the package side containing the item description (nomenclature) shall be the ammunition lot number. The lot number shall be preceded by the word “LOT” and shall be underlined with a solid line approximately 0.13 inch (3.18 mm) thick. If a serial number is required for the item(s), the word “SER” and the specific number(s) shall be marked above the lot number.

Source: https://assist.dla.mil -- Downloaded: 2016-10-21T11:13Z
Check the source to verify that this is the current version before use.

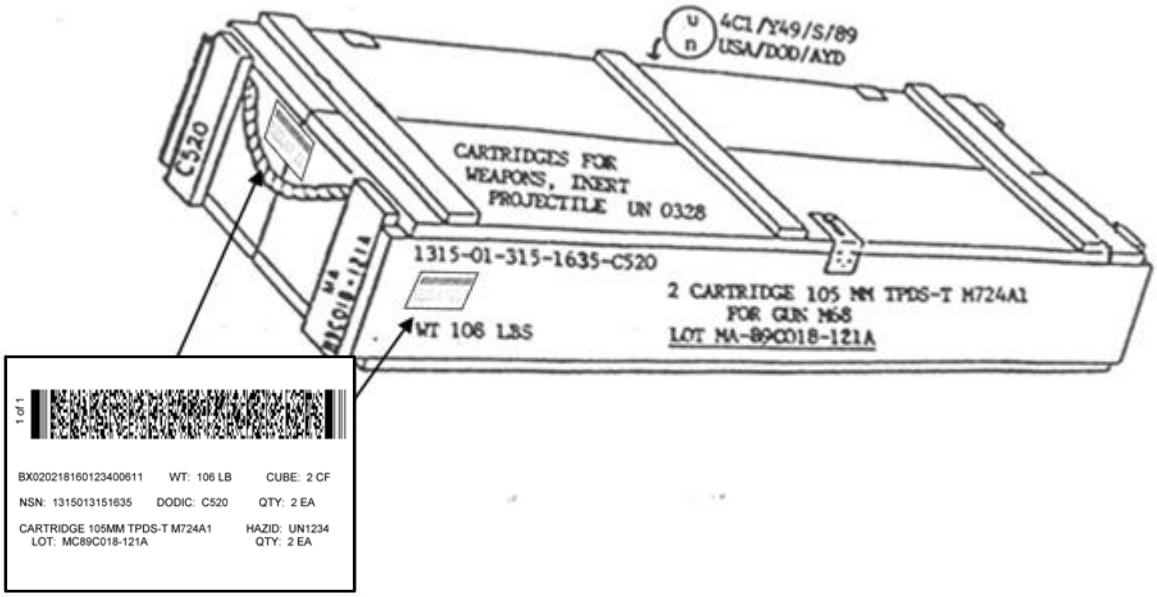

FIGURE 46. Identification marking and the placement of ammo/explosives identification bar code labels on exterior rectangular containers.

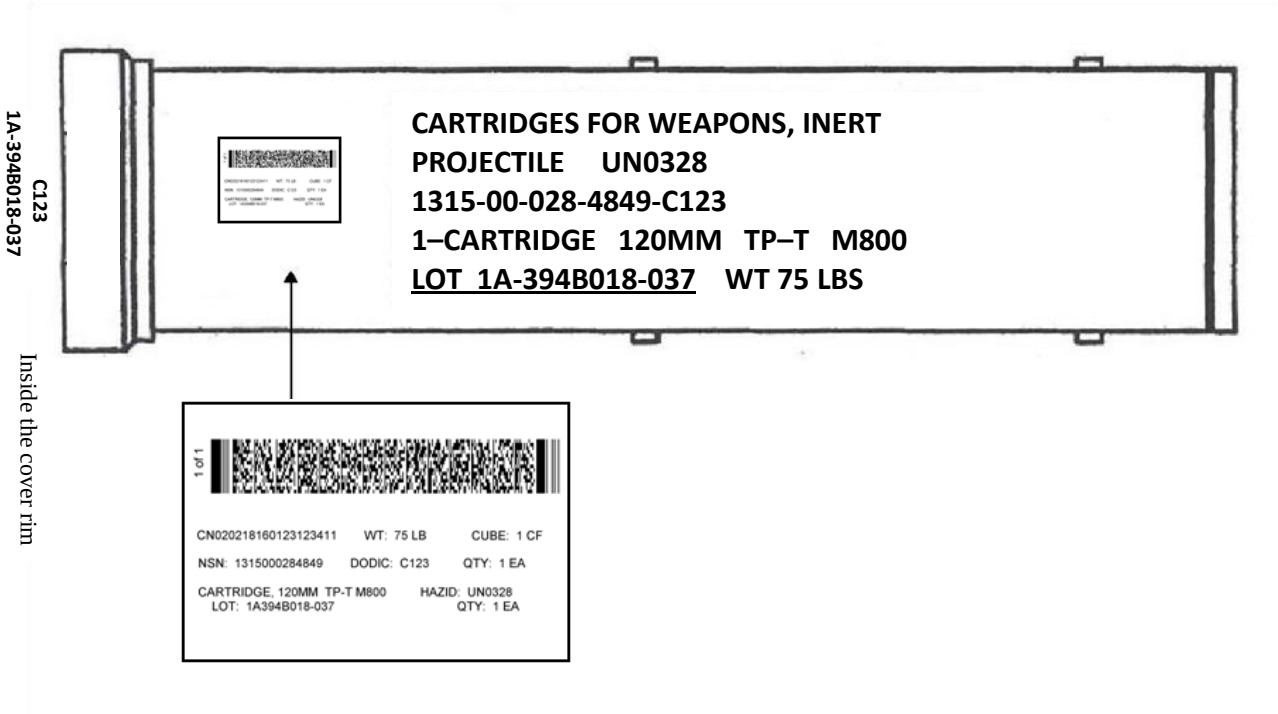

FIGURE 47. Identification marking and the placement of ammo/explosives identification bar code labels for exterior cylindrical containers.

Source: https://assist.dla.mil -- Downloaded: 2016-10-21T11:13Z
Check the source to verify that this is the current version before use.

e. UN Performance-Oriented Packaging certification marking. The appropriate UN Performance-Oriented Packaging symbol as specified by the cognizant design activity in the contract or on the drawing shall be marked on the side of the container that is opposite the identification-marked side for both rectangular and cylindrical containers. If the exterior container is an overpack containing UN Performance-Oriented Packaging certification marked and certified inner containers, the following marking shall be placed on the container in lieu of the UN Performance-Oriented Packaging certification marking: "OVERPACK". This marking, however, is not sufficient for combination packages consisting of overpacked inner packaging which contain liquids and are transported by military aircraft. For military air shipments of applicable HAZMAT liquids, the outer container shall be marked with the words "AIR ELIGIBLE" to indicate that either the inner receptacles or the outer container meet internal pressure requirements for air eligibility. Any other special precautionary marking and HAZMAT labels required by the appropriate regulation for the commodity described by the PSN shall be applied (see 5.13).

f. DODIC/NALC and lot number (marked on ends of container or container rims). Both ends of rectangular containers shall be marked with the DODIC/NALC of the item being packed and the appropriate lot number. The lot number on the box ends shall not be preceded by the word "LOT" or underlined. The DODIC/NALC shall be marked on the inside rim of the cover end of cylindrical containers. The lot number shall not be preceded by the word "LOT".

g. Nose end marking is required for rocket ammunition and white phosphorus "WP" smoke artillery ammunition. The rocket nose or artillery fuze end of the container shall be identified with the marking "NOSE END". For rectangular boxes, the end or edge of the box top shall be marked "NOSE END" to indicate the ammunition position. Marking may be placed on either end of the box to coincide with ammunition position.

h. DOT special permit (SP) numbers. If a DOT-SP number is assigned to a packaged item, it shall be plainly and durably marked "DOT-SP" followed by the specific exemption number assigned. Unless otherwise specified, rectangular containers shall have the "DOT-SP" marking on a separate line from the PSN/ID number marking.

i. Special marking. Other special marking that is required to be marked on the package shall be provided for in the contract or by detailed drawings. Examples include special orientation, temperature limit, NATO standardization, net explosive weight (NEW) for air shipments, and center of balance marking. Unless otherwise specified, the marking shall be placed in a conspicuous location on the identification marked side of the package where they shall not interfere with other marking.

j. Class 1 (explosives) materials owned by DoD and packaged prior to January 1, 1990 shall be declared "Government-owned dangerous goods packaged prior to January 1, 1990" on the shipping papers and need not be re-marked.

5.14.3 Identification marking on empty containers. Containers inspected and certified as empty that are shipped to contractors or depots shall be marked with the word "EMPTY". The old munitions item identification and DOT marking shall be completely obliterated, unless

Source: https://assist.dla.mil -- Downloaded: 2016-10-21T11:13Z
Check the source to verify that this is the current version before use.

the containers are being retained for reuse. Care should be taken not to obliterate the container marking; i.e., container NSN, part number, or nomenclature. The word "EMPTY" shall be stenciled or printed on the upper half of the container on the same side that had the old identification of contents listed. A decal (EMPTY) may be used if space is available but not on reusable containers since the adhesive is difficult to remove. The container NSN and nomenclature shall be applied, if not already present. Each container shall contain a certificate of clearance. The condition code shall be annotated on turn-in/shipping documents and the appropriate DD Form 1500 series tags/labels (see 5.10.21) shall be attached to the outside of containers that are in other than condition code A. Due to sheer volume and cost effectiveness, empty containers destined for a DLA Disposition Services Office, specifically designated and designed for containment of small arms ammunition (50 Cal and below), are not subject to the obliteration requirement, but are subject to written certification on the disposal turn-in document that they are empty and free of explosive/energetic material.

5.14.4 Identification marking on unit loads, to include palletized unit loads (see Figure 48). The identification marking on unit loads of ammunition shall include the following and be applied as follows:

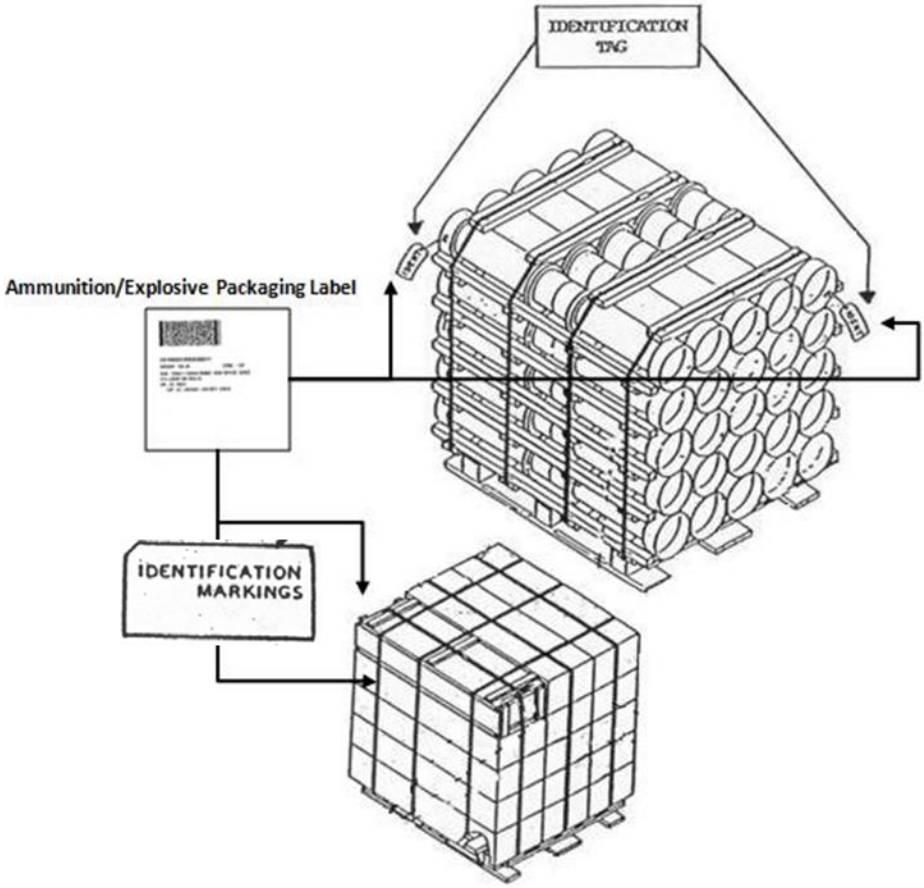

FIGURE 48. Examples of ammo/explosives unit load identification and identification bar code marking.

Source: https://assist.dla.mil -- Downloaded: 2016-10-21T11:13Z
Check the source to verify that this is the current version before use.

5.14.4.1 Content of unit load identification marking.

a. NSN.

b. DODIC/NALC.

c. Lot number.

d. Quantity.

(1) By lot (if more than one lot).

(2) Total quantity (if one lot).

e. Item description.

f. Gross weight.

g. PSN and UN HAZMAT identification number.

h. UN Performance-Oriented Packaging certification marking.

5.14.4.2 Application of unit load identification marking.

a. Unit loads.

(1) Unit loads require all identification marking as specified in 5.14.4.1 be visible on the exposed face of one or more boxes (see Figures 46/47) or on the waterproof marking board described in (5) below.

(2) When a unit load is configured in such a way that the PSN and UN HAZMAT identification number are not visible, the top layer shall be turned to expose the PSN and identification number. When it is not practical to turn the entire top layer, two diagonal corner boxes on the top layer shall be turned to expose the PSN and identification number.

(3) Boxes which shall have all nose ends pointed in the same direction such as rockets and white phosphorus (WP) rounds shall not be turned.

(4) UN Performance-Oriented Packaging certification marking shall also be exposed on at least one place on the unit load.

(5) Unit loads require additional identification marking that may not be visible on exposed boxes. This additional marking is normally limited to quantity and partial nomenclature such as 100 grenades or 30 cartridges, gross

Source: https://assist.dla.mil -- Downloaded: 2016-10-21T11:13Z
Check the source to verify that this is the current version before use.

weight of the unit load, applicable mixed lot identification, and any empty / light (lite) box data (quantity per box or number of empty boxes). Unless otherwise specified, unit loads may have one or more boxes turned to present a blank surface for marking additional information. Marking shall be applied as prescribed in section 5 herein and shall be on the largest practical lettering. Waterproof marking boards may be used when it is impossible to obtain a blank surface for marking. Approval shall be obtained by the procuring command prior to using marking boards. For unit loads 10 cubic feet and over, additional identification marking shall be placed on the end of the load adjacent to the identification marked side.

(6) Unitized or palletized break bulk shipments by cargo ship under charter to DoD may be shipped with a single label per unit load. However, when the logistics flow of material is unknown, general labeling requirements shall be met.

(7) All OCONUS shipments (except those in intermodal containers) require that at least one hazard warning label be affixed to each unit load of palletized cargo or to each exterior package of loose cargo in accordance with Title 49 CFR and the applicable international modal document requirements.

(8) The marking and labeling requirements imposed by foreign governments shall be observed as prescribed by the Service directing the shipment.

b. Unit loads of unpackaged ammunition.

(1) Unit loads of otherwise unpackaged ammunition, such as separate loading projectiles, require the addition of only the identification marking that is not visible on the projectiles. Any additional marking is normally limited to quantity, nomenclature, gross weight, and mixed lot identification, including quantity per lot. Marking may be applied directly to the load by stenciling, embossing, stamping, or machine printing. Tags may be used when the marking cannot be applied directly to the pallet load.

(2) The location and content of identification marking shall be specified on the ammunition packaging and marking drawings for separate loading projectiles.

c. Unit loads of cylindrical containers.

(1) Unit loads of cylindrical metal containers with identification marking such as propelling charges, complete rounds, etc., shall have additional marking applied diagonally at opposite ends of the upper layer of the load by waterproof tag (see 4.2.3), label (see 4.2.2) or stamping in a contrasting color (see 4.2.1.4).

Source: https://assist.dla.mil -- Downloaded: 2016-10-21T11:13Z
Check the source to verify that this is the current version before use.

(2) Unit load identification marking shall include gross weight, quantity, mixed lot, and empty/light container identification.

(3) Containers shall be positioned so that the PSN and UN HAZMAT identification number are visible on at least one container on one side of the unit load. The orientation of the containers specified in the unitized drawing shall be followed.

d. Unit loads comprised of multiple lots.

(1) Unit loads of ammunition and explosives comprised of more than one lot shall be marked with the appropriate lot numbers.

(2) The lot number and quantity of each lot in unit loads of mixed lots shall be listed on a plain white label or tag, as applicable, and shall be placed adjacent to other identification marking. The maximum size of the label or tag shall be a minimum of 4 by 4 inches (10.2 by 10.2 cm) and the lettering shall be not less than 0.25 inch (6.35 mm) in height.

e. Full carload or full truckload shipments. Packages of military ammunition and explosives shipped by or on behalf of DoD in freight container loads, carloads, or truckloads (including exclusive use) which are loaded and unloaded by the shipper or by DoD, are exempt from labeling requirements.

f. Empty / light (lite) box / light (lite) load marking. When a package contains less ammunition or explosives than the package is designed to contain or when an empty package is used to square a unit load, the box shall be specifically marked as follows:

(1) An empty / light (lite) box / light (lite) load, if applicable, shall be identified as such by marking or stenciling the words “EMPTY” or “LIGHT BOX” (“LITE BOX”) in a contrasting orange paint scheme, on the identification side, space permitting, in the largest practical size letters. An additional marking or stenciling shall be placed on the top, side, and end of the container.

(2) Unitized loads. When the bottom, sides or end surfaces of an empty or light (lite) box is visible within a unit load, then these surfaces shall also be marked or stenciled with the words “EMPTY” or “LIGHT BOX” (“LITE BOX”) in a contrasting orange paint scheme, in the largest practical size letters. In addition, a unit load containing empty or light (lite) boxes shall be identified by quantity per box and/or number of empty boxes, on the pallet identification marking side.

(3) Cylindrical containers. An empty / light (lite) box / light (lite) load of cylinders shall be identified as such by marking or stenciling the words “EMPTY” or “LIGHT BOX” (“LITE BOX”) in a contrasting orange paint

Source: https://assist.dla.mil -- Downloaded: 2016-10-21T11:13Z
Check the source to verify that this is the current version before use.

scheme on the bottom, opposite sides, and the cover or cover latch of the cylinder.

(4) In a general shipping situation, there is only one light (lite) box per lot, per condition code, per structure. However, additional light (lite) boxes may be required for items issued to custody accounts. Light (lite) box marking is not required for ammunition disposition request (ADR) munitions or munitions in ready explosive facilities. Nonstandard munitions boxes do not require light (lite) box marking.

(5) Marking applied to containers need not be re-accomplished to correct deficiencies in size, location, or space unless required for shipment.

NOTE: At the Services' discretion, an empty / light (lite) box / light (lite) load box may be identified as such by painting the entire box in a contrasting orange paint scheme. Moreover, regardless of container size (cube) and the Services' preferred method, the contrasting orange paint scheme is readily identifiable to an empty / light (lite) box / light (lite) load.

5.14.5 Ammunition/Explosives Packaging Label marking requirements. The application of an Ammunition/Explosives Packaging Label with 2D (PDF417) bar code and human-readable text is required for identification marking on ammunition and explosives containers and unit loads. Use of the 2D (PDF417) bar code with human-readable information is mandatory. In addition to all other marking, every exterior container and unit load shall have Ammunition/Explosives Packaging Labels or marking applied (see Figures 46, 47 and 48).

a. The Ammunition/Explosives Packaging Label is designed to support standard DoD munitions business processes while providing support to implement data automation across all Services. This is accomplished by marking the mandatory identification data elements, while allowing for additional optional data elements to support unique Service requirements. These data elements are encoded in a 2D (PDF417) bar code following the procedures in Table A-V Ammunition/Explosives Packaging Label 2D (PDF417) format. All mandatory data elements if available are encoded and printed on the label in a human-readable form to reduce additional marking requirements (see Figures 46, 47, and 48).

b. The use of the Ammunition/Explosives Packaging Label is mandatory for all new procurement of ammunition and explosives stocks.

c. Re-marking of all legacy stocks is not mandatory; however, they should be marked as the need to re-mark the stock occurs. Until all legacy stocks are marked, legacy assets that enter the transportation system shall be marked once the Service has the capability to generate the Ammunition/Explosives Packaging Label.

5.14.5.1 Label specifications. Labels shall meet the requirements for grade A, style 2, composition (b) labels as specified in MIL-PRF-61002. The performance requirements for solvent and detergent resistance are not required. The label should be the pressure sensitive adhesive type. Additional performance requirements that shall be met are as follows:

Source: https://assist.dla.mil -- Downloaded: 2016-10-21T11:13Z
Check the source to verify that this is the current version before use.

a. The label material shall provide a minimum of 42 lbs/1 inch width tensile strength at break when tested in accordance with ASTM D882. Material shall provide a minimum of 6600 grams (66 Newtons) of puncture – propagation tear resistance when tested in accordance with ASTM D2582.

b. Each label shall be no greater than 4 by 4 inches (10.2 by 10.2 cm) square (see Figure 49). The size of the labels may be commensurate with the quantity of encoded data and the human-readable information. Format is mandated and grouped by NSN or part number and then by serial number for each lot number, if applicable. Figure 51 shows an example of a label set.

NOTE: The encoded data in the 2D (PDF417) bar code is as follows with the non-printable ASCII characters represented by $^{\mathbf{RS}}$, $^{\mathbf{GS}}$, and $_{\mathbf{EOT}}$ (also see Appendix A):

[)>^{RS}06^{GS}**20S**PL100921052308905611^{GS}**2Q**2000^{GS}**3Q**LB^{GS}**18Q**10CF^{GS}**N**1325012147311^{GS}**4R**G119^{GS}**7Q**8EA
^{GS}**6W**FUZE SET, BOMB FMU-139A/B^{GS}**10P**DUN0409^{GS}**1T**MGG87G001Y010^{GS}**7Q**6EA^{GS}**1T**MGG88
D003Y002^{GS}**7Q**2EA^{GS}**N**1325014445122^{GS}**4R**EA69^{GS}**7Q**4EA^{GS}**6W**KMU-556/B (JDAM)^{GS}**10P**DUN0000^{GS}
1TMDS99K105-001^{GS}**7Q**4EA^{GS}**S**158741^{GS}**S**158941^{GS}**S**158985^{GS}**S**158990^{RS}$_{EOT}$

FIGURE 49. Ammunition/Explosives Packaging Label.

Source: https://assist.dla.mil -- Downloaded: 2016-10-21T11:13Z
Check the source to verify that this is the current version before use.

5.14.6 Ammunition/Explosives Packaging Label 2D (PDF417) bar code data sets. Repeating data sets are used in order to minimize the amount of data contained in the bar code, and an implicit nesting structure is established within the bar code data (see Figure 50). It contains three levels of information: generic data that is relevant to the entire package level entity, a set of data for each stock numbered or part numbered asset, and lot number and/or serial number level information. Each level provides further classification of the ammunition and explosives contained in the packaging level. See hierarchy level description below for proper use.

Package level data – for material managed by lot number
  Stock item data
    Lot level data

Package level data – for material managed by lot number and serial number
  Stock item data
    Lot level data
      Serial number data

Package level data – for material managed by serial number only
  Stock item data
    Serial number data

FIGURE 50. Data nesting structure.

5.14.6.1 Ammunition/Explosives Packaging Label bar code data structure. The identification bar code and the accompanying human-readable information shall be formatted and printed as noted in the following paragraphs and Appendix A of this standard, with reference to ANSI MH10.8.2 and ISO/IEC 15434. Data structure requirements are noted in Table A-V.

a. Package level data. Package level generic information is encoded in the identification bar code.

(1) Label traceability code. The label traceability code is a 20-character unique element for each package label and is identified with the ANSI MH10.8.2 data identifier of '20S'. The label traceability code is alphanumeric characters with no special characters allowed. The label traceability code is used to identify a specific package to prevent duplicate scanning of the same package during receipt, inventory, internal location change, and shipping operations. While the label traceability code may be unique within a Service's automated information system (AIS), the label serial number is not considered unique within a Joint environment, as the Service AISs are not dynamically linked.

(2) Package weight. The package weight is a data element used to document the total gross weight of the assets and all inner and outer packing for a given package level and is identified with the ANSI MH10.8.2 data

Source: https://assist.dla.mil -- Downloaded: 2016-10-21T11:13Z
Check the source to verify that this is the current version before use.

identifier of ‘2Q’. Package weight is expressed as a number of one to nine characters, allows the use of a decimal point, and is assumed to be pounds unless qualified by a different unit of measure (see Table A-V Notes 1 and 3). If the weight is documented with a unit for measurement other than pounds, then a “package weight units” data element is used to identify the unit for measurement, which is identified with the ANSI MH10.8.2 data identifier of ‘3Q’.

(3) Package cube. The package cube is the total cube (volume) of the package and is identified with the ANSI MH10.8.2 data identifier of ‘18Q’.

(4) Optional data elements. Enter the applicable data elements that pertain to the entire package. See Table A-V for the listing of optional elements.

b. Stock item level data. The stock item level data provides information that classifies the ammunition or explosives by characteristics for the purpose of supply chain management. The primary method of classification is by the assigned NSN or PN if an NSN is not assigned. The stock item level data set may be repeated within the packaging level data set. See Appendix A and Table A-V for an explanation of data identifiers and 2D (PDF417) bar code encoding requirements. The following elements are included within this data level.

(1) National stock number. The national stock number identifies the material in the package if an NSN has been assigned. It is identified with the ANSI MH10.8.2 data identifier of ‘N’. If an NSN is not assigned, the material is tracked by PN. The following business rules apply:

(2) Part number. The PN assigned by the manufacture identifies the material and is identified with the ANSI MH10.8.2 data identifier of ‘1P’. The PN shall only be encoded when the NSN is not assigned.

(3) Department of Defense identification code (DODIC). The DoD identification code is a four-digit code that identifies ammunition and explosives items within a supply system and is identified with the ANSI MH10.8.2 data identifier of ‘4R’.

(4) Hazardous material code. The hazardous material code is used to identify the specific type of hazardous material being transported and handled. It is identified with the ANSI MH10.8.2 data identifier of ‘10P’.

(5) Nomenclature. The nomenclature assigned by the Federal Logistics Information System provides the proper noun description of the assets and is identified with the ANSI MH10.8.2 data identifier of ‘6W’. When the security classification of an item prevents the marking of the nomenclature during transportation, that guidance takes precedence over this standard.

Source: https://assist.dla.mil -- Downloaded: 2016-10-21T11:13Z
Check the source to verify that this is the current version before use.

(6) Quantity (unit of measure). The quantity (unit of measure) identifies the units/amounts of materiel or number of items in a package and is identified with the ANSI MH10.8.2 data identifier of '7Q'. The DoD 4100.39, Vol 10, Table 81, Unit of Measure Designation code or ANSI ASC X12.3 Data Element 355 (Unit or Basis for Measurement) code shall be printed as human-readable information on the labels. Each Service's AIS shall provide for quantity conversions, if required, for unit of issue codes, unit of measure codes, and X12.3 Data Element 355 codes.

(7) Optional data elements. Enter the applicable data elements that pertain to the stock item level. See Table A-V for the listing of optional elements.

c. Lot number and/or serial number level data. The lot number and serial number level provides information that identifies product life cycle information associated with the ammunition or explosives NSN or PN. The lot number and serial number level data set may be repeated within the stock level data set. See Appendix A and Table A-V for an explanation of data identifiers and 2D (PDF417) bar code encoding requirements. The following elements are included within this data set.

(1) Lot number. The lot number identifies the production batch of the materiel in a package and is identified with the ANSI MH10.8.2 data identifier of '1T'. Material tracked by lot numbers may also have serial numbers assigned; in this case the serial numbers would be shown within the lot number data set. See Figure 51 example.

(a) Quantity (unit of measure). The quantity identifies the units/amounts of materiel or number of lot numbered items in a package and is identified with the ANSI MHI MH10.8.2 data identifier of '7Q'. The DoD 4100.39, Vol 10, Table 81, Unit of Measure Designation code or ANSI ASC X12.3 Data Element 355 (Unit or Basis for Measurement) code shall be printed as human-readable information on the labels. Each Service's AIS shall provide for quantity conversions, if required, for unit of issue codes, unit of measure codes, and X12.3 Data Element 355 codes.

(b) Serial number(s). The serial number and/or UII, as applicable, uniquely identifies ammunition or explosives within a lot number and is identified with the ANSI MH10.8.2 data identifier of 'S'and/or '25S' respectively. See Figure 51 example.

(c) Optional data elements. Enter the applicable data elements following the respective lot number or a serial numbered item. See Table A-V for the listing of optional elements.

Source: https://assist.dla.mil -- Downloaded: 2016-10-21T11:13Z
Check the source to verify that this is the current version before use.

(2) Serial number(s). When material is not tracked by lot number(s), but is tracked by serial number and/or UII, as applicable , this data set shall be used. See Figure 51 example.

(a) The serial number uniquely identifies ammunition or explosives within an NSN or PN and is identified with the ANSI MH10.8.2 data identifier of 'S'.

(b) Optional data elements. See Table A-V for the listing of optional elements.

5.14.6.2 Identification bar code human-readable information. Human-readable information shall be printed in close proximity to the 2D (PDF417) bar code. Mandatory data elements shall be encoded in the 2D (PDF417) bar code and printed on the label as human translations of the encoded data if the element is applicable to the item or package mark. The DoD 4100.39, Vol 10, Table 81, Unit of Measure Designation code or ANSI ASC X12.3 Data Element 355 (Unit or Basis for Measurement) code shall be printed as human-readable information on the labels. Each Service's AIS shall provide for quantity conversions, if required, for unit of issue codes, unit of measure codes, and X12.3 Data Element 355 codes.

a. All encoded data elements shall be printed as human-readable information.

(1) The printed human-readable information data shall be a translation of the data encoded in the 2D (PDF417) bar code and shall not include encoded data identifiers or element separators. The 2D (PDF417) bar code human-readable information for each data element, except for the label traceability code, shall be preceded by a representative data field title. The encoded ANSI ASC X12.3 Data Element 355 (Unit or Basis for Measurement) code suffix for quantity, cube, and weight should be translated for clarity.

(2) The last two characters of the label traceability code shall be translated and printed on each label to show the relationship, e.g., 1 of 2, 2 of 2 within a series of labels for a package. A label series may consist of nine labels used to identify the contents of the labeled package.

b. The human-readable information shall be printed outside the quiet zone of the 2D (PDF417) bar code. The human-readable information text shall be no smaller than 10 lines per 1 inch (25.4 mm) (approximately a 7-point font).

5.14.6.3 Use of multiple Ammunition/Explosives Packaging Labels for large data requirements (see Figure 51). If a 2D (PDF417) bar code and its printed human-readable information contain more information than can be printed on one label, additional 2D (PDF417) bar code labels shall be affixed next to each other to show the additional information. Each label in the set shall have a unique label serial number and shall be marked consecutively as "1 of X", "2 of X", "3 of X", etc. where X is the total number of labels in the set. The first 18 characters and the 20th character of the traceability code may also be identical. The information for an

Source: https://assist.dla.mil -- Downloaded: 2016-10-21T11:13Z
Check the source to verify that this is the current version before use.

NSN, PN, or lot number data set may span across multiple labels. Extra large 2D (PDF417) bar codes shall not be used for this purpose.

NOTE: Legacy ammo/explosives labels also allowed NSN, PN, or lot number data to span across multiple labels; however, each label in the label series was required to show the common data and to also show the item total for each label in the series. The revised Ammunition/Explosives Packaging Label does not require spanned common elements on each label, except for the traceability code, and does not require an item total for each label in the set. Applications shall be able to handle either situation when reading the 2D (PDF417) bar code.

5.14.6.4 Location and application of the Ammunition/Explosives Packaging Label.

a. The Ammunition/Explosives Packaging Label shall be placed in the upper left quadrant of the side having the greatest overall, usable marking surface, as applicable, containing the identification marking as shown in Figure 46. If there is insufficient space on the upper left quadrant, the label shall be placed in the most convenient place on the marked side of the container. A pressure sensitive label shall be affixed to wood containers by stapling both ends of the label to the wood, if required to prevent loss. Any commercial-type staple may be used as long as it is not placed within the 2D (PDF417) bar code or within the quiet zone of the 2D (PDF417) bar code. On other than wood surfaces, the label shall be affixed only after the surface to be labeled is clean and dry. On wire-bound boxes, the label shall be affixed so that it is at least 0.25 inch (6.35 mm) from all wires and staples.

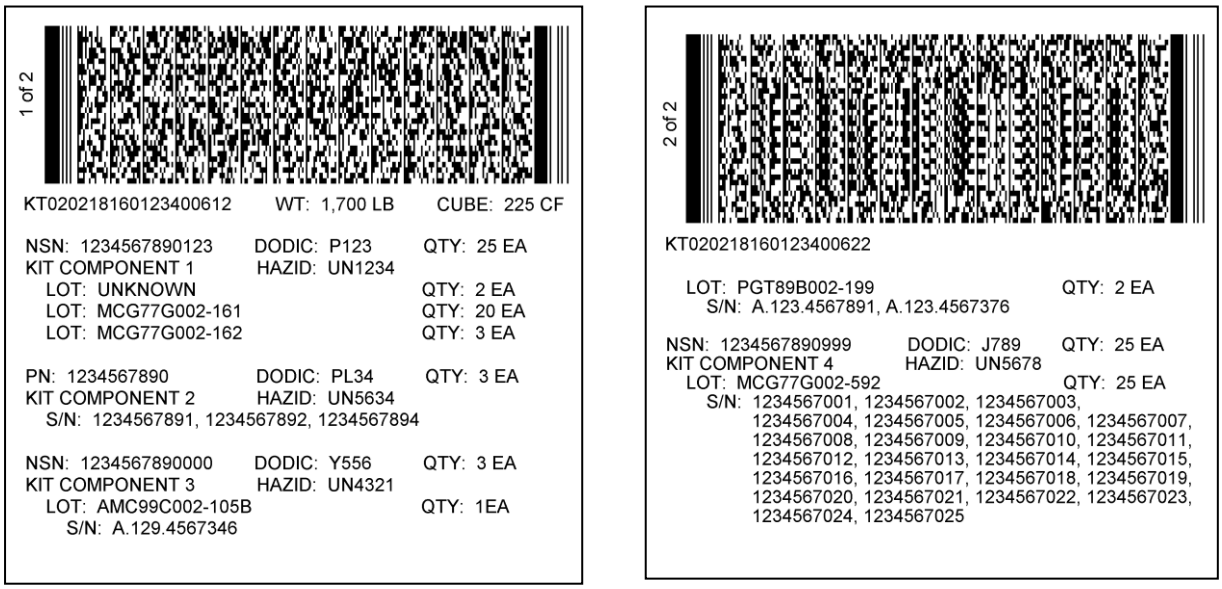

NOTE: Actual size is 3 by 3 inches (7.6 by 7.6 cm).

FIGURE 51. Examples of multiple Ammunition/Explosives Packaging Labels.

b. The cylindrical container Ammunition/Explosives Packaging Label shall be applied immediately to the left of the identification marking and shall always be placed on a relatively

Source: https://assist.dla.mil -- Downloaded: 2016-10-21T11:13Z
Check the source to verify that this is the current version before use.

flat surface along the container length as shown in Figure 47. Surfaces to be labeled shall be clean and dry before the label is affixed.

c. For shipping containers over 10 cubic feet and all unit loads, to include palletized unit loads, the Ammunition/Explosives Packaging Label shall be applied on the upper left quadrant of the side having the greatest overall usable marking surface and on the upper right quadrant end surface to the left of the identification marked side, unless otherwise directed in specific technical drawings. (See Figure 48).

5.14.7 Address marking (see Figure 2A). Address marking shall be accomplished and applied as specified in 5.2.

5.14.8 Order of precedence. In the event of a conflict between the ammunition and explosives marking requirements of this standard and the requirements of product specifications, item technical publications, or drawings, the order of precedence shall be:

a. The requirements of the drawings.

b. The requirements of item technical publications.

c. The requirements of product specifications.

d. The requirements of this standard.

6. NOTES

(This section contains information of a general or explanatory nature that may be helpful, but is not mandatory).

6.1 Intended use. This standard practice is intended for use when guidance is required for the application of military marking as prescribed herein or in contractual documents. The marking shown herein may be applied either by vendors or by Government activities.

6.2 Subject term (key word) listing.

Address	Exterior container	Sacks
Bags	Federal Supply Class	SEAVAN
Bar code	Identification	Shipping
Boxes	Intermediate container	Tags
Code 39	Labels	Unit pack
Crates	National stock number	
Drums	PDF417	

Source: https://assist.dla.mil -- Downloaded: 2016-10-21T11:13Z
Check the source to verify that this is the current version before use.

6.3 International standardization agreement implementation. This standard implements STANAG 4281, STANAG 2233, STANAG 4329, QSTAG 1152, and QSTAG 1154. When changes to, revision, or cancellation of this standard are proposed, the preparing activity must coordinate the action with the U.S. National Point of Contact for the international standardization agreement, as identified in the ASSIST database at https://assist.dla.mil.

6.4 Sizes of forms used. Descriptions of certain forms cited for use by this standard contain specific size requirements. These forms are generally intended to be imprinted with data by computers or generated entirely by computers. The sizes listed are those that are compatible with the majority of printers associated with computer systems commonly used.

6.5 Unit pack desiccant label. The Method 50 label or package marking described in 5.10.10 is used to identify packages containing desiccant, a drying agent. The label is intended to alert personnel that the package will remain unopened to prevent the degradation of preservation of the item. The color red is used to make this marking stand out from other marking, which is usually black.

6.6 Chemical agent resistant coatings (CARC). Certain military equipment is required to be painted with material that resists contamination by certain chemical agents that may be used by the enemy in wartime situations. Since no commercial equivalents are available for these compounds, and since there is no commercial need for such protection, use of specific military materials is required.

6.7 Changes from previous issue. Marginal notations are not used in this revision to identify changes with respect to the previous issue due to the extent of the changes.

Source: https://assist.dla.mil -- Downloaded: 2016-10-21T11:13Z
Check the source to verify that this is the current version before use.

TABLE IV. Shelf-life codes.

			Required Number of Months/Quarters Remaining Upon Receipt by the first Government activity	
Shelf-Life Period	**Type I**	**Type II**	**Months**	**Quarters**
Non-Deteriorative No Shelf Life Applies	0 zero	0 zero	N/A	N/A
01 Month	A	N/A	25 days	N/A
02 Months	B	N/A	50 days	N/A
03 Months	C	1	75 days	N/A
04 Months	D	N/A	3	1
05 Months	E	N/A	4	1
06 Months	F	2	5	2
09 Months	G	3	8	3
12 Months (1.00-Year)	H	4	10	3
15 Months (1.25-Years)	J	N/A	13	4
18 Months (1.50-Years)	K	5	15	5
21 Months (1.75-Years)	L	N/A	18	6
24 Months (2.00-Years)	M	6	21	7
27 Months (2.25-Years)	N	N/A	23	8
30 Months (2.50-Years)	P	N/A	26	9
36 Months (3.00-Years)	Q	7	31	10
48 Months (4.00-Years)	R	8	41	14
60 Months (5.00-Years)	S	9	51	17
72 Months (6.00-Years)	I	N/A	61	20
84 Months (7.00-Years)	T	N/A	71	24
96 Months (8.00-Years)	U	N/A	82	27
Variable such as: 90, 132, 216, 228, etc. Months or any other number of months not specifically assigned.	V	N/A	77, 113, 184, 194, etc.	26, 38, 61, 65, etc.
120 Months (10-Years)	W	N/A	102	34
180 Months (15-Years)	Y	N/A	153	51
240 Months (20-Years)	Z	N/A	204	68
Shelf-Life Period Greater than 60 Months for Type II Extendible Items.	N/A	X	85 percent of number of months	85 percent of number of months

Source: https://assist.dla.mil -- Downloaded: 2016-10-21T11:13Z
Check the source to verify that this is the current version before use.

APPENDIX A
TECHNICAL DETAILS FOR 2D (PDF417) BAR CODE

A.1. SCOPE

A.1.1 Scope. Appendix A provides detailed printing instructions for the 2D (PDF417) bar code and it provides explanations for the tables that follow. This Appendix is a mandatory part of the standard. The information contained herein is intended for compliance.

A.2. PROCEDURE

A.2.1 Printing instructions.

a. The 2D (PDF417) bar code used for shipping and receiving shall be printed with no more than 12 data columns in width. The use of 13 to 18 data columns is allowed for inventory or supporting documentation applications (identification marking, ammunition/explosives marking, packing list, etc) if a smaller 2D (PDF417) bar code cannot accommodate the increased data requirements. A 2D (PDF417) bar code includes a start pattern, a left row indicator column, one or more data columns, a right row indicator column, and a stop pattern. See Figure A-1.

b. The 2D (PDF417) bar code shall not exceed 2.4 inches (61 mm) in height to include the surrounding minimum quiet zone.

c. The 2D (PDF417) bar code shall have a minimum quiet zone of 0.04 inch (1.0 mm) above, below, to the left, and to the right.

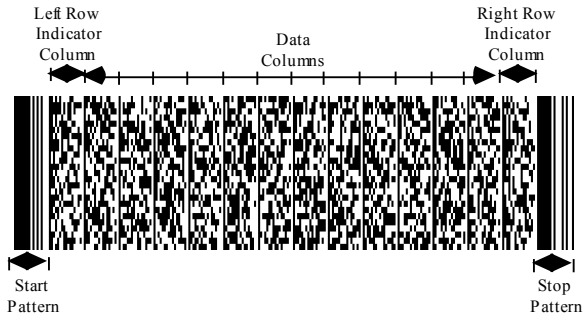

FIGURE A-1. 2D (PDF417) data columns.

d. The minimum narrow element dimension (X-dimension) shall not be less than 0.010 inch (10 mils or 0.254 mm). For 2D (PDF417) bar codes up to 12 data columns, the X-dimension shall not exceed 0.017 inch (17 mils or 0.432 mm). For 13 to 18 data columns, the X-dimension shall not exceed 0.010 inch (10 mils or 0.254 mm).

e. The 2D (PDF417) bar code shall have a minimum row height of three times the width of the narrow element (X-dimension).

Source: https://assist.dla.mil -- Downloaded: 2016-10-21T11:13Z
Check the source to verify that this is the current version before use.

f. The 2D (PDF417) bar code shall use error correction level 5.

g. The start and stop pattern bars of the 2D (PDF417) bar code shall be perpendicular to the natural bottom of the label.

h. The label should be designed so that two bar codes are not next to each other in the same horizontal plane unless the label is wide enough to reduce the possibility of interference with successful bar code scanning.

i. Data identifiers which contain no information should not be printed.

j. The quality of the printed bar code shall meet a grade requirement of 2.5 (B) at the point of production when measured in accordance with ISO/IEC 15438 with a measurement aperture of 0.010 inch (10 mils or 0.25 mm) and an inspection wavelength of 660 ± 10 nm.

k. Macro PDF417 bar codes shall be used when the encoded data message file exceeds the capacity of a single PDF417 bar code on a label. A full size (18 data column) PDF417 or Macro PDF417 bar code can encode approximately 1100 characters at error level 5. The character capacity of the bar code is based on a limit of 925 codewords, the compaction algorithm used to encode the data in a codeword, and the bar code's error correction level.

NOTE: The Ammunition/Explosives Packaging Label(s) shall not use Macro PDF417 bar codes.

(1) Macro PDF417 bar codes shall be encoded and printed in accordance with ISO/IEC 15438, which also provides a technical explanation for the bar code control block information that facilitates reassembly of an encoded message after all the applicable bar codes have been scanned at least once in any sequence.

(2) Each Macro PDF417 bar code represents a segment of the whole data file that is identified within the bar code control block with a file ID assigned by the user or system. To reconstruct the whole file, the file segment encoded in each bar code is placed in the correct order based on an encoded segment number (n of x). There is no requirement for the file ID to be globally unique. However, if multiple bar code sets could be present for a scanning event, the file ID shall be unique within the context of the event.

(3) Each receiving system used to scan Macro PDF417 bar codes will need to determine if the system scanner will operate in a buffered or unbuffered mode. As the Macro PDF417 bar codes are scanned, the de-packetizing function reconstructs the original message from segments with the same file ID. If operating in buffered mode, the bar code codeword de-packetizing function is in the scanner's decoder; if operating in unbuffered mode, the de-packetizing function is in the receiving system decoder.

Source: https://assist.dla.mil -- Downloaded: 2016-10-21T11:13Z
Check the source to verify that this is the current version before use.

(4) To accommodate potentially unbuffered operations by some receiving systems, a segment count field in the control block shall be encoded in each Macro PDF417 bar code to facilitate checking that all segments in a set of Macro PDF417 bar codes are received. The segment count field identifies the total number of Macro PDF417 bar codes in the distributed file.

(5) Decoders should provide a decoder-specific means whereby the processing of a file ID segment set may be aborted, thus allowing the decoder to begin processing a different set of Macro PDF417 bar codes. This is necessary to prevent a deadlock condition should one or more bar codes of a given file ID be missing or undecodable.

(6) The following is provided to describe the Macro PDF417 control block used for the bar code in Figure 20. The codewords are encoded by software suites using different schemes; thus, the example only shows the numeric value of each codeword and not the actual syntax of how it is encoded by the software.

(a) Figure 20 control block codewords within the first (top) bar code's segment data structure are:

(928) (111)(100) (129) (923)(001) (111)(002)

(b) Figure 20 second (bottom) bar code control block codewords are:

(928) (111)(101) (129) (923)(001) (111)(002) (922)

(c) The codewords represent the following controls:

(928) = tag identifier for the start of a macro control block

(111)(100) = modular math base 900 for the 1st segment (00000)

(111)(101) = modular base 900 for the 2nd segment (00001)

(129) = file ID assigned by the user for the set of macro bar codes

(923)(001) = tag and field designator for the segment count field

(111)(002) = modular base 900 for the segment count (00002)

(922) = the tag identifier for the end of the last macro control block

A.2.2 Table A-I information. Table A-I provides data descriptions, format, and data sources for the ANSI MH10.8.2 data identifiers (DI) used in the 2D (PDF417) bar code and for the data element identifiers (DEI) that identify DoD unique data elements from the DTR.

a. Format 06 DIs (Column 1), as explained in ANSI MH10.8.2, and the Format 07 DEIs (Column 1), as defined by DoD in Table A-1, contain specified characters that define the general category and intended use of the data that follows. See the USTRANSCOM web site, http://www.transcom.mil/ait/ (Library > Standards and Formats), for the most current list of DoD applicable data qualifiers (DIs and DEIs).

Source: https://assist.dla.mil -- Downloaded: 2016-10-21T11:13Z
Check the source to verify that this is the current version before use.

b. DoD usage (Column 2) displays the titles and usage adopted by DoD for the respective DIs/DEIs.

c. Data sources (Column 3) shows the most common source for the 2D (PDF417) bar code data. If a DI or DEI is used to encode data for multiple applications, multiple data sources may be described.

A.2.3 Tables A-II through A-V information. Tables A-II through A-V provide the content of the data streams for generic military shipping labels (MSL), unit move MSLs, unit pack ID and container ID 2D (PDF417) bar codes, and ammunition and/or explosives identification marking 2D (PDF417) bar codes, respectively.

a. Compliance indicator (Column 1) shows the special formatting characters associated with the ISO/IEC 15434 data format. The compliance indicator shall be the first three characters in the message header. The compliance indicator shall be [)> (left bracket, right parenthesis, and greater than).

b. Element separators (Column 2) show the separator or terminal code that is for that particular part of the data stream. The format trailer character (RS) shall be used at the end of the message header (before a format series) and at the end of each format series of data (before the next series of data). The data element separator (GS) separates data elements within each format series of the data table. The message trailer (EOT) identifies the end of the message within the data stream. See ISO/IEC 15434. These are non-printable, single, ASCII control characters that cannot be typed as simple text into the bar code – the control characters must be entered as per the encoding software's specifications.

Hexadecimal and Decimal Values

ASCII / ISO 646	HEX	DEC
RS	1E	30
GS	1D	29
EOT	04	04

c. Format header (Column 3) is a two-digit numeric identifier "06" or "07" which identifies the rules governing the message format. It is followed by Format 06/07 data qualifiers (DIs or DEIs in Columns 4 and 5, respectively), which define data content within the message.

d. Data field (Column 6) contains an abbreviated description of the data field. See Table A-I for a full description.

e. Data format type/length (Column 7) contains indicators of whether the data is alpha and/or numeric and the length of the actual data represented by this field (e.g. an5). A convention of "an..25" means a variable length data string of up to 25 alphanumeric characters, whereas "an25" means a fixed length of precisely 25 alphanumeric characters. A convention of

Source: https://assist.dla.mil -- Downloaded: 2016-10-21T11:13Z
Check the source to verify that this is the current version before use.

"an13..15" means a minimum of 13 characters and a maximum of 15 characters. The plus symbol (+) is used to annotate how data formats are constructed in the data field; the plus sign is not part of the encoded data string. However, when referenced to a note in the data format column, the plus symbol (+) becomes part of the data sub-string to separate different types of data that are encoded within a single field (i.e., DIs 2L, 3L, and 5L). Variable length fields are not zero-filled unless the information is extracted from an external data source that requires leading zeros. If a DI or DEI is used to encode data for multiple applications, multiple data formats may be described.

f. Sample data (Column 8) contains sample encode value for the ASCII element indicated.

g. Label text. The Ammunition/Explosives Packaging Label uses this column in Table A-V to describe the abbreviation that should be used to describe the human-readable data printed on the label.

h. The generic MSL 2D (PDF417) bar code and the Ammunition/Explosives Packaging Label 2D (PDF417) bar code store a repeating set of selected data at the end of the bar code format.

(1) The repeating data set for the MSL reflects what is normally marked in the linear (Code 39) bar codes or the 2D (PDF417) bar code on a DD Form 1348-1A. The data capacity restrictions of the MSL 2D (PDF417) bar code will normally limit its content to ten line items depending on the amount of MSL and transportation control movement document (TCMD) data recorded. Each supply document series begins with a DI '12S' and terminates with a DI '12Q' code – if either of these two fields is blank, the blank field shall be encoded with the applicable DI.

(2) The repeating data set for the Ammunition/Explosives Packaging Label 2D (PDF417) bar code reflects the quantities of stock numbered assets or part numbered assets within each package or unit load. Each repeating data set series begins with a DI 'N' or DI '1P' code.

A.2.4 Data syntax graphic. Figure A-2 is an example of how ANSI MH10.8.2 DIs and DoD DEIs are used in a 2D (PDF417) bar code to depict a single shipment unit TCMD with multiple supply line items within the shipment unit.

a. The transportation control number (TCN) and related TCMD data are contained in the first Format 06 block that terminates with an RS code followed by a Format 07 block that terminates with an RS code.

b. The supply line item data for specific document numbers are contained in a Format 06 block that follows the TCMD data. Data looping is required to document a multipack shipment when multiple line items exist within a single shipment unit. In this data looping structure, the order in which the line items are encoded in the 2D (PDF417) bar code is critical

Source: https://assist.dla.mil -- Downloaded: 2016-10-21T11:13Z
Check the source to verify that this is the current version before use.

to the meaning of the data. Additional Format 06 envelopes may also be used to denote the data looping relationship. The number of supply line item documents is limited by the storage capacity of the AIT device.

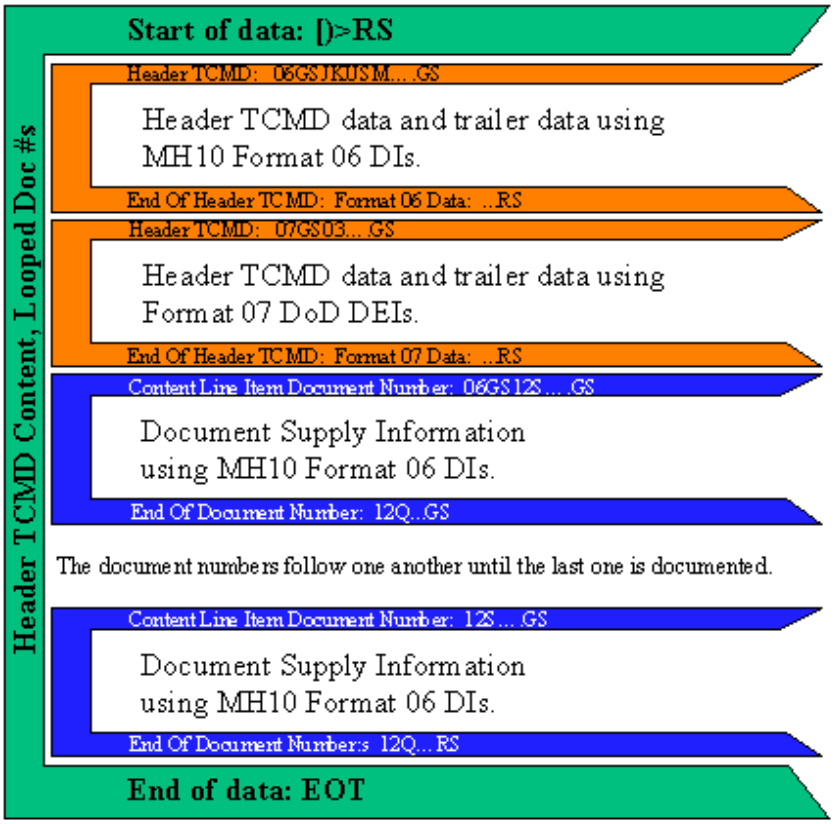

FIGURE A-2. 2D (PDF417) data syntax.

A.2.5 Encoding serial numbers. The following procedures accommodate two different encoding schemes: 1) A legacy requirement that encoded serial numbers separate from the item's UII, and 2) a revised requirement that links an item's UII to its serial number. The linked serialization numbers allow the transfer of associated data for serialized items within the supply chain when multiple like items (e.g. same NSN) are packaged and shipped together.

A.2.5.1 Syntax business rules for encoding linked serial numbers and UIIs. ISO/IEC 15434 Format 06/07 envelopes shall be used to signal the context of the encoded relationships of the item data.

a. For a single item (quantity = 1), common data for the item shall be encoded in the ISO/IEC 15434 Format 06 and Format 07 envelopes, as applicable. The Format 06 envelope may also be used to associate item-specific data (e.g. serial number, UII, etc.) for the uniquely identified item. A single data qualifier or paired data qualifiers ('S', or '25S', or 'S' and '25S') may be used within the Format 06 envelope to identify and associate the serialized data for an item. This procedure can link one or more serial numbers and a UII to the same single item.

Source: https://assist.dla.mil -- Downloaded: 2016-10-21T11:13Z
Check the source to verify that this is the current version before use.

b. For multiple items (quantity greater than 1), common data for the items shall be encoded in the ISO/IEC 15434 Format 06 and Format 07 envelopes, as applicable. An additional Format 06 envelope (one per item) shall be used for each item to encode item-specific data (e.g. serial number (DI ‘S’), UII (DI ‘25S’), lot/batch (DI ‘1T’), etc.) for the uniquely identified item. Additional information may be associated to each serialized item such as condition code, manufacturer CAGE, etc. A serial number and/or UII may or may not be encoded for each item.

NOTE: For multiple item entries (quantity greater than 1), if the 2D bar code reader decodes multiple serialization numbers (DI ‘S’ and/or DI ‘25S’) in the first Format 06 envelope, the system must assume there is no associated relationship between the serialization numbers. Previous versions of MIL-STD-129 used the first Format 06 envelope to encode separate lists of serial numbers (DI ‘S’) and UIIs (DI ‘25S’) – the serialized numbers (serial or UII) were not linked together for any one item. A serial number and/or UII may or may not be encoded for each item. Updated distribution systems must be able to decode the data in the legacy 2D symbol but should not generate any 2D symbols using the legacy business rule.

A.2.5.2 <u>Data syntax example</u>. The below example shows an extract of the data string syntax for encoding individual serial numbers, encoding UIIs, and linking an item’s serial number with a UII. The first Format 06 and 07 envelopes ($06^{GS}\ldots^{RS}07^{GS}\ldots^{RS}$) contain the common data for the item. The data string example is marked to show the data content within each Format 06 serial number and/or UII envelope.

$[)>^{RS}06^{GS}\ldots^{RS}07^{GS}\ldots^{RS}\boxed{06^{GS}\mathbf{S}674A3604^{RS}}06^{GS}\mathbf{S}674A3605^{RS}\boxed{06^{GS}\mathbf{25S}06141411A0B9C3D5^{RS}}$
$06^{GS}\mathbf{25S}06141411A0B9C3D6^{RS}\boxed{06^{GS}\mathbf{25S}UN077991289674B36AB^{RS}}06^{GS}\mathbf{S}674B36AB^{RS}$
$\boxed{06^{GS}\mathbf{25S}UN077991289674B36AC^{GS}\mathbf{S}674B36AC^{RS}}06^{GS}\mathbf{25S}06141411A0B9C3D7^{GS}\mathbf{S}674A3608$
^{RS} EOT

A.2.6 <u>Table A-V Ammunition/Explosives Packaging Label specifications</u>. The following business rules apply to the data elements of the Ammunition/Explosives Packaging Label 2D (PDF417) bar code. Mandatory data elements shall be encoded in the 2D (PDF417) bar code and printed on the label as a human translation of information in the 2D (PDF417) bar code if the element is applicable to the item or package mark. The DoD 4100.39, Vol 10, Table 81, Unit of Measure Designation code or ANSI ASC X12.3 Data Element 355 (Unit or Basis for Measurement) code shall be printed as human-readable information on the labels. Each Service’s AIS shall provide for quantity conversions, if required, for unit of issue codes, unit of measure codes, and X12.3 Data Element 355 codes.

a. Label traceability code. The label traceability code is a mandatory data element identified by the ANSI MH10.8.2 data identifier ‘20S’.

(1) The label traceability code shall always be 20 characters long.

(2) Each label in a label series shall contain a traceability code, which shall be identical to all the other label serial numbers in the series, except for the last two characters (label “N” of “X”) if multiple labels are required. The label or label series represents the materiel contained in an ammo package. As many as nine labels may be contained in a label series.

Source: https://assist.dla.mil -- Downloaded: 2016-10-21T11:13Z
Check the source to verify that this is the current version before use.

(3) Format is UMYYMMDDhhmmssssRRNX.

(4) UM = ANSI ASC X12.3 Data Element 355 (Unit or Basis for Measurement) code for the package type. The package type is not generally the same as the materiel unit of issue, and shall be chosen from the permissible package types agreed to by the Services.

Label Traceability Code Package Types (UM)

Valid X12.3 Code	Definition
BX	Box
CH	Container
CN	Can
DR	Drum
KT	Kit
PC	Piece
PL	Pallet/Unit Load
RL	Roll
ST	Set
EA	Each

(5) Construction of the traceability code shall consist of the following sub elements: YY=year, MM=month, DD=date, hh=hour, mm=minute, ssss=seconds and hundredths of a second, RR=random number, NX=label N of X labels. No more than one label should be generated during each hundredth of a second for this traceability code format.

(6) An alternate for "ssss" in the traceability code is: ssss = a second (00 to 59) and the label number generated during that second (00 to 99) (i.e. "ssss" could equal 0000 to 5999). No more than 100 labels may be generated per second using this format.

(7) When multiple labels are required to mark a single entity, the first 18 characters of the traceability code shall be common to each label series and the final two characters identify each label, e.g., 1 of 3, 2 of 3, 3 of 3. If only a single label, use 1 of 1 (see Figure 49).

Type use	Examples
Single label for a pallet	PL090310142235587211
Series of labels for a pallet where data requires two labels.	
First (1 of 2) label	PL090310142235587212
Second (2 of 2) label	PL090310142235587222
Single label for a box	BX090310142235587211

Source: https://assist.dla.mil -- Downloaded: 2016-10-21T11:13Z
Check the source to verify that this is the current version before use.

b. Package weight (WT). Mandatory data element identified by the ANSI MH10.8.2 data identifier ‘2Q’.

(1) Shall be a positive, non-zero quantity.

(2) Shall in the range of ‘.00000001’ to ‘999999999’.

(3) May be a decimal quantity.

(4) If a decimal quantity is used, the decimal character shall be a ‘.’ period.

(5) When encoded as ASCII characters, the total maximum length of the package weight is nine characters.

(6) Insignificant leading and trailing zeros shall be suppressed, except for a single leading zero for decimal quantities which have only a fractional part. For example, ‘.01’ and ‘0.01’ are permitted, but ‘00.01’, ‘123.00’, and ‘0123’ are not.

(7) Thousand separators or other digit group separators are not allowed.

(8) Only one DI ‘2Q’ may appear on a label or label series.

Type use	**Examples**
Minimum weight	.00000001
Maximum weight	999999999
Weight with a single leading zero for its whole number	0.025

c. Package weight unit. Optional data element if the package weight is in pounds; mandatory if other than pounds. Identified by the ANSI MH10.8.2 data identifier ‘3Q’.

(1) Only one DI ‘3Q’ shall be used on the lead label.

(2) Valid entries are ‘LB’ or ‘KG’ only.

Type use	**Examples**
Weight is measured in pounds	LG
Weight is measured in kilograms	KG

d. Package cube (CU). Mandatory data element used to document the total cube (volume) of the package and is identified by the ANSI MH10.8.2 data identifier ‘18Q’.

(1) Shall be a positive, non-zero quantity.

(2) Shall in the range of ‘.00000001’ to ‘999999999’.

Source: https://assist.dla.mil -- Downloaded: 2016-10-21T11:13Z
Check the source to verify that this is the current version before use.

(3) May be a decimal quantity.

(4) If a decimal quantity is used, the decimal character shall be a '.' period.

(5) When encoded as ASCII characters, the total maximum length of the package weight is nine characters.

(6) Insignificant leading and trailing zeros shall be suppressed, except for a single leading zero for decimal quantities, which have only a fractional part. For example, '.01' and '0.01' are permitted, but '00.01', '123.00', and '0123' are not.

(7) Thousand separators or other digit group separators are not allowed.

(8) Only one DI '18Q' may appear on a label or label series.

(9) Only valid entries are 'CF' cubic feet or 'CR' cubic meters.

Type use	**Examples**
Minimum cube	.00000001CF .00000001CR
Maximum cube	999999999CF 999999999CR
Cube with a single leading zero for its whole number	0.025CF 0.025CR

e. National stock number(s) (NSN). Mandatory data element if assigned that is used for identification in all logistic processes and is identified by the ANSI MH10.8.2 data identifier 'N'.

(1) If the materiel has an NSN assigned, it shall be used. If no NSN has been assigned, then the part number shall be used to identify the materiel.

(2) One or more NSNs may occur on the same label or label series.

(3) The NSN shall be either 13 characters long or 15 characters long if it includes the material management code (MMC).

(4) Dash characters which are sometimes used to visually identify logical constituents of the NSN (as in "1315-01-245-4950") shall not be contained in the NSN encoded in the bar code.

Type use	**Examples**
Nominal case	1315012450124
NSN with material management code (MMC)	1315012450124CM

Source: https://assist.dla.mil -- Downloaded: 2016-10-21T11:13Z
Check the source to verify that this is the current version before use.

f. Part number(s) (PN). Mandatory data element if the materiel does not have an NSN assigned and is identified by the ANSI MH10.8.2 data identifier '1P'.

(1) Used only if the materiel does not have an NSN assigned.

(2) One or more part numbers may occur on the same label or label series.

(3) The part number is 1 to 16 characters long.

Type use	**Example**
Nominal case	C995

g. Department of Defense identification code (DODIC). Mandatory data element for materiel that has been assigned one. It provides a means for materiel handlers to easily identify the type of ammunition and is identified by the ANSI MH10.8.2 data identifier '4R'.

(1) If a DODIC has not been assigned, it shall not be used or encoded.

(2) A DODIC always applies to the NSN or PN which preceded the DODIC in the bar code.

(3) The DODIC is exactly four characters long.

Type use	**Example**
Nominal case	C995

h. Hazardous material code. Mandatory data element for material that has been assigned a United Nations (UN) or North American (NA) HAZMAT identification number and is identified by the ANSI MH10.8.2 data identifier '10P'.

(1) If a hazardous material code has not been assigned, it shall not be used or encoded.

(2) A hazardous material code always applies to the NSN or PN which preceded the hazardous material code in the bar code.

(3) At most, one hazardous material code may be encoded in the bar code for each NSN or PN.

(4) Systems shall ensure that they maintain the ability to read the legacy MIL-STD-129 ammo/explosives label UN HAZMAT identification number format of an1+an..4; for example U1234.

Type use	**Example Data**	**Human Readable**
UN Number	DUN1234	UN1234
NA Number	DNA3456	NA3456

Source: https://assist.dla.mil -- Downloaded: 2016-10-21T11:13Z
Check the source to verify that this is the current version before use.

i. Nomenclature. Mandatory data element that provides a description of the materiel contained in the package and is identified by the ANSI MH10.8.2 data identifier ‘6W’.

(1) Authoritative source for the nomenclature is the Federal Logistic Information System.

(2) If the materiel does not have an assigned nomenclature, the nomenclature field shall contain a user defined accurate description of the asset.

(3) If the nomenclature length is more than 44 characters (includes spaces), the nomenclature shall be truncated so that the left-most 44 characters are retained.

(4) The nomenclature always applies to the NSN or PN which preceded the nomenclature in the bar code.

(5) At most, one nomenclature shall be encoded for each NSN or PN.

(6) Leading or trailing spaces in the nomenclature shall not be encoded.

(7) Embedded spaces separating words in the nomenclature shall be encoded.

Type use	**Examples**
Nominal case	BOMB GP 2000 LB MK84-2 TRITONAL LDD
Truncated representation	PROJ5/38VTNF MK31,35,49NSD ADF GRAY BRST STA Note that this is a (hypothetical) 44 character truncated representation. The non-truncated representation is “PROJ5/38VTNF MK31,35,49NSD ADF GRAY BRST STANDARD ISSUE”

j. Lot number(s) (Lot). Mandatory data element if assigned that identifies a manufacture’s batch of production and is identified by the ANSI MH10.8.2 data identifier ‘1T’.

(1) Lot number is in the range 1 to 17 characters in length.

(2) The dash ‘-’ is the only special character allowed.

(3) Not all ammunition and explosives are assigned a lot number for management.

(4) More than one lot number may be encoded under a given NSN or PN.

(5) Lot number may also have serialized items within the lot.

(6) The lot number always applies to the NSN or PN which preceded the lot number in the bar code.

Source: https://assist.dla.mil -- Downloaded: 2016-10-21T11:13Z
Check the source to verify that this is the current version before use.

Type use	**Example**
Nominal case	LC-05A603L362A

k. Serial number(s). Mandatory data element if assigned and is identified by the ANSI MH10.8.2 data identifier ‘S’.

(1) Serial number is in the range ‘1’ to ‘30’ characters in length: ‘0’ through ‘9’ and ‘A’ through ‘Z’.

(2) The dash ‘-’ is the only special character allowed.

(3) If materiel does not have an assigned serial number, the serial number field shall not be encoded.

(4) More than one serial number may be encoded in the bar code for each NSN or PN if no lot number is assigned.

(5) When materiel has a lot number assigned, the serial number(s) are repeated under the lot number level.

(6) Where materiel has a lot number and serial numbers assigned, the number of serial numbers listed for each lot should equal the lot number quantity. For example, Lot 09TL001-001 has serialized assets and four items are in the package (LOT: 09TL001-001, QTY/UI 4 EA, SN: THL1111, THL2222, THL3333, and THL4444).

(7) A serial number with the same lot number and stock number shall not appear more than once on the same label.

Type use	**Examples**
Nominal case	517883 L1234-123

l. Quantity (unit of measure). Mandatory data element which consists of two sub data elements. The first nine digits identify the item count. Unit of measure information for the last two characters is sourced from the system of record and encoded using an ANSI ASC X12.3 Data Element 355 (Unit or Basis for Measurement) code for the respective unit of measure. Identified by the ANSI MH10.8.2 data identifier ‘7Q’.

(1) Digits shall be a positive, non-zero quantity.

(2) Digits shall in the range of ‘.00000001’ to ‘999999999’.

(3) Count may be a decimal quantity.

(4) If a decimal quantity is used, the decimal character shall be a ‘.’ period

(5) When encoded as ASCII characters to accommodate decimal values, the total maximum length of the quantity is nine characters.

Source: https://assist.dla.mil -- Downloaded: 2016-10-21T11:13Z
Check the source to verify that this is the current version before use.

(6) For the item count, insignificant leading and trailing zeros shall be suppressed, except for a single leading zero for decimal quantities which have only a fractional part. For example, '.01' and '0.01' are permitted, but '00.01', '123.00', and '0123' are not.

(7) Thousand separators or other digit group separators are not allowed.

(8) The quantity field is included in the stock level detail and if there is more than one lot number, it is repeated for each lot number as well. Thus, the label shows the total count of the NSN and count for each lot number.

(9) Valid codes to encode the information are extracted from the ANSI ASC X12.3 Data Element 355 (Unit or Basis for Measurement) codes and they are shown in Table A-V of this standard.

(10) Printed human-readable information. The DoD 4100.39, Vol 10, Table 81, Unit of Measure Designation code or ANSI ASC X12.3 Data Element 355 (Unit or Basis for Measurement) code shall be printed as human-readable information on the labels. Each Service's AIS shall provide for quantity conversions, if required, for unit of issue codes, unit of measure codes, and X12.3 Data Element 355 codes.

Type use	**Example**
Nominal case	2EA

m. Condition code. Optional data element that is used to identify the condition of materiel in the package and is identified by the ANSI MH10.8.2 data identifier '2R'.

(1) Always a single alphabetic character.

(2) Valid characters are 'A' through 'H', 'J' through 'N', 'P' through 'S', or 'V'.

(3) Empty condition code DI shall not be encoded.

(4) Condition code always consists of a single alphabetic character.

(5) A condition code always applies to the level of the data hierarchy (lot number, or serial number) which preceded it in the bar code. If the condition code follows a lot number, it shall apply to all the items that follow for that lot number. If the condition code follows a serial number, it applies to only that serial number.

Type use	**Example**
Nominal case	B

Source: https://assist.dla.mil -- Downloaded: 2016-10-21T11:13Z
Check the source to verify that this is the current version before use.

n. Container ID. Optional data element that is used to identify a package. Identified by the ANSI MH10.8.2 data identifier ‘1B’.

(1) Container ID is a 2 to 11 character alphanumeric identifier.

(2) The dash ‘-’ is the only special character allowed.

(3) If materiel does not have an assigned container ID, the container ID field shall not be encoded in the bar code.

(4) Only one DI ‘1B’ may appear on a label or label series.

Type use	**Examples**
Nominal case	TGHU2962459 85AF032

o. Document number. Optional data element that indicates the materiel release order document number (requisition number) for the package contents. Identified by the ANSI MH10.8.2 data identifier ‘12S’.

(1) Document number is 14 to 15 alphanumeric characters: ‘0’ through ‘9’ and ‘A’ through ‘Z’.

(2) No special characters are allowed.

(3) An empty document number DI shall not be encoded.

(4) A document number always applies to the level of the data hierarchy (lot number, or serial number) which preceded it in the bar code. If the document number follows a lot number, it shall apply to all the items that follow for that lot number. If the document number follows a serial number, it applies to only that serial number.

Type use	**Examples**
Nominal case	W81YWB63250111 FV336572345000

p. Expiration date. Optional data element that indicates maintenance, expiration, next inspection (M.E.N.) in which the materiel shall be recertified before utilization. Identified by the ANSI MH10.8.2 data identifier ‘14D’.

(1) Expiration date always consists of an 8-character numeric date (YYYYMMDD) identifier.

(2) An empty expiration date DI shall not be encoded.

Source: https://assist.dla.mil -- Downloaded: 2016-10-21T11:13Z
Check the source to verify that this is the current version before use.

(3) Month and day parts shall be left-padded with zeros, if needed, to ensure that both the month and day parts are each two characters long.

(4) The month part shall be in the range '01' through '12'.

(5) DD shall always be last day of the month.

(6) An expiration date always applies to the level of the data hierarchy (lot number, or serial number) which preceded it in the bar code. If the expiration date follows a lot number, it shall apply to all the items that follow for that lot number. If the expiration date follows a serial number, it applies to only that serial number.

(7) A line item (lot quantity or serialized item) may have only one expiration date.

Type use	**Example**
Nominal case (July 2009)	20090731

q. Facility/building. Optional data element used to record the intended or actual building, facility, vessel, or other storage location in which a package is stored. Identified by the ANSI MH10.8.2 data identifier 'L'.

(1) Facility/building is a 1 to 14 character alphanumeric identifier.

(2) If the materiel does not have a facility or building assigned, then it shall not be encoded.

(3) Only one DI may appear on a unit load label or label series.

(4) Empty location/grids shall not be encoded.

Type use	**Example**
Nominal case	4047A 0101C0

r. Location/grid. Optional data element used to record the intended or actual storage location within a facility/building in which a package is stored. Identified by the ANSI MH10.8.2 data identifier '20L'.

(1) Location/grid is a 1 to 14 character alphanumeric identifier.

(2) If the materiel does not have location assigned, then it shall not be encoded

(3) Only one DI '20L' may appear on a unit load label or label series.

(4) Empty location/grids shall not be encoded.

Source: https://assist.dla.mil -- Downloaded: 2016-10-21T11:13Z
Check the source to verify that this is the current version before use.

Type use	Example
Nominal case	4047A002C001A ABAB

s. Owner code. Optional data element used to indicate the owner of the materiel. The owner code is used as a key field for identifying an ammunition line item and is used in all logistics processes of some Services. Identified by the ANSI MH10.8.2 data identifier ‘7V’.

(1) Owner code is a single numeric character.

(2) No special characters are allowed.

(3) Empty owner code DI shall not be encoded.

(4) An owner code always applies to the level of the data hierarchy (NSN/PN, lot number, or serial number) which preceded it in the bar code. If the owner code appears after an NSN/PN, it shall apply to all the items that follow for that NSN/PN. If the owner code follows a lot number, it shall apply to all the items that follow for that lot number. If the owner code follows a serial number, it applies to only that serial number.

Type use	Example
Nominal case	5

t. Purpose code / activity classification code (ACC). Optional data element used to indicate the reason for which the materiel is being held in inventory. Identified by the ANSI MH10.8.2 data identifier ‘86Y’.

(1) Purpose code and ACC share the same DI but are programmatically identified by the first alphabetic character ‘P’ for “purpose” or ‘A’ for “activity”.

(2) The purpose code valid characters are: ‘A’ through ‘H’, ‘J’ through ‘N’, ‘P’, ‘Q’, ‘S’, ‘T’, ‘V’, ‘W’, ‘Y’, and ‘Z’.

(3) The activity classification code valid characters are: ‘A’ through ‘H’, ‘J’ through ‘N’, ‘Q’, ‘R’, ‘T’, ’V’, ‘W’, and ‘Z’.

(4) Empty purpose code / ACC DI shall not be encoded.

(5) A purpose code always applies to the level of the data hierarchy (NSN/PN, lot number, or serial number) which preceded it in the bar code. If the purpose code appears after an NSN/PN, it shall apply to all the items that follow for that NSN/PN. If the purpose code follows a lot number, it shall apply to all the items that follow for that lot number. If the purpose code follows a serial number, it applies to only that serial number.

Source: https://assist.dla.mil -- Downloaded: 2016-10-21T11:13Z
Check the source to verify that this is the current version before use.

Type use	Example
Nominal case (purpose code ‘A’)	PA
Nominal case (ACC ‘B’)	AB

u. QA certification date. Optional data element used to document the date that a quality assurance inspector certified the package integrity and item condition located within the package. Identified by the ANSI MH10.8.2 data identifier ‘20D’.

(1) QA certification date consists of nine characters (DDMMMYYYY).

(2) Empty QA certification dates shall not be encoded.

(3) The DD (day of month) part of the QA certification date shall be consistent with the month selected. For example 31 MAR would be acceptable, whereas 31 APR would not.

(4) The DD (day of month) part shall be left-padded with a zero, if needed to ensure that it is two characters long. For example, 02MAR2009 would be correct; 2MAR2009 would not be correct.

(5) The MMM (month) part shall be one of the following: ‘JAN’, ‘FEB’, ‘MAR’, ‘APR’, ‘MAY’, ‘JUN’, ‘JUL’, ‘AUG’, ‘SEP’, ‘OCT’, ‘NOV’, ‘DEC’.

(6) A QA certification date always applies to the level of the data hierarchy (lot number, or serial number) which preceded it in the bar code. If the QA certification date follows a lot number, it shall apply to all the items that follow for that lot number. If the QA certification date follows a serial number, it applies to only that serial number.

Type use	Example
Nominal case	04JUL2009

v. QA defect code. Optional data element used to identify defects known to exist for the materiel in or on the package. Identified by the ANSI MH10.8.2 data identifier ‘37Y’.

(1) The QA defect code shall always consist of six alphanumeric characters. ‘0’ through ‘9’ and ‘A’ through ‘Z’.

(2) No special characters are allowed.

(3) Empty QA defect code DI shall not be encoded.

(4) A line item (lot quantity or serialized item) may contain up to two QA defect codes.

(5) A QA defect code always applies to the level of the data hierarchy (lot number, or serial number) which preceded it in the bar code. If the QA

Source: https://assist.dla.mil -- Downloaded: 2016-10-21T11:13Z
Check the source to verify that this is the current version before use.

defect code follows a lot number, it shall apply to all the items that follow for that lot number. If the QA defect code follows a serial number, it applies to only that serial number.

Type use	**Examples**
Nominal case	1551AW HAN25D

w. QA stamp. Optional data element used to identify the individual and activity performing the most recent inspection on the asset. Identified by the ANSI MH10.8.2 data identifier '1H'.

(1) QA stamp consists of 9 to 10 alphanumeric characters '0' through '9' and 'A' through 'Z'.

(2) Empty QA stamp DI shall not be encoded.

(3) QA stamp is always accompanied with a QA certification date.

(4) A QA stamp always applies to the level of the data hierarchy (lot number, or serial number) which preceded it in the bar code. If the QA stamp follows a lot number, it shall apply to all the items that follow for that lot number. If the QA stamp follows a serial number, it applies to only that serial number.

Type use	**Examples**
Nominal case	FV5872001 1234567890

x. Weapon stock number (WSN). Optional data element used to associate a set of individual components that make up a single round. Identified by the ANSI MH10.8.2 data identifier '30T'.

(1) WSN is a 1 to 14 character alphanumeric identifier.

(2) If the materiel does not have a WSN assigned, then it shall not be encoded.

(3) Only one DI '30T' may appear on a unit load label or label series.

Type use	**Examples**
Nominal case	BC27A462500564 BJ97B522800238

Source: https://assist.dla.mil -- Downloaded: 2016-10-21T11:13Z
Check the source to verify that this is the current version before use.

APPENDIX A

TABLE A-I. 2D (PDF417) bar code data identifier descriptions (Format 06).

Format 06 Data Identifier	Format 06 DoD Usage (See Note 1)	Data Sources
J (JKUSM)	**Transportation Control Number (TCN)** Data identifier 'KUSM' follows DI 'J' to provide global uniqueness IAW ISO/IEC 15459-1 formats.	DTR Pt II Table 208-2 DTR Pt II App L DTR Pt II App M
6J (6JKUSM)	**Transportation Tracking Number (TTN)** Data identifier 'KUSM' follows the DI '6J' to provide global uniqueness IAW ISO/IEC 15459-1 formats.	DTR Pt II Chapter 208
1B	**Container ID** – Used for non-ISO containers.	System of Record
3D	**Ship Date** – format YDDD.	DTR Pt II Table 208-2
14D	**Expiration Date** – format YYYYMMDD	System of Record
20D	**QA Cert Date** – format DDMMMYYYY	System of Record
1H	**QA Stamp**	System of Record
I	**Vehicle Identification Number (VIN)**	DTR Pt II Chapter 208
4K	**Contract Line Item Number (CLIN)**	Contract
5K	**Contractor Shipment Number**	DD Form 250
8K	**Contract Number**	Contract
9K	**Transportation Account Code (TAC)**	DTR Pt II Table 208-2 DTR Pt II App M DTR Pt II App L DTR Pt II App V
L	**Facility/Building – Storage location**	System of Record
2L	**Ship To Address** – up to 5 lines of 35 characters. See Note 2.	DTR Pt II Table 208-2
3L	**From Address** - up to 3 lines of 35 characters. See Note 2.	DTR Pt II Table 208-2
5L	**Consignee Address** - up to 5 lines of 35 characters. See Note 2.	DTR Pt II Table 208-2
20L	**Location/Grid**	System of Record
51L	**Origin Zip Code** – for SEAVAN point of origin.	DTR Pt II App M (TCMD T_9, Table M-14, rp 9-14)
N	**National/NATO Stock Number (NSN) –** or stock identification elements thereof.	DTR Pt II App M (TCMD T_6) DD 1348-1A
1P	**Part Number –** assigned by manufacturer.	As marked

Source: https://assist.dla.mil -- Downloaded: 2016-10-21T11:13Z
Check the source to verify that this is the current version before use.

TABLE A-I. 2D (PDF417) bar code data identifier descriptions (Format 06) - Continued.

Format 06 Data Identifier	Format 06 DoD Usage (See Note 1)	Data Sources
10P (10PD)	**Hazardous Material Code** Data identifier 'D' (ANSI ASC X12.3 Data Element 208) follows DI '10P' to further qualify the data as a Title 49 CFR, Part 172.101 hazardous materials identification number in the form of UNnnnn or NAnnnn. See Format 07 DEI '41'/'42' for TCMD UN code or North American code applications. See Format 07 DEI '49' for TCMD air commodity/special handling code.	As marked
2Q	**Weight** - with optional metric unit of value for cargo. Default = pounds. See Note 3.	DTR Pt II Table 208-2
3Q	**Weight Units**	DTR Pt II Table 208-2
7Q	**Quantity (Unit of Issue (UI))** See Note 5.	DD 1348-1A (rp 25-29) = Qty DD 1348-1A (rp 23/24) = UI
	Quantity (Unit of Measure (UM)) See Note 5.	FLIS System of record
	Weight See Table A-V Notes 1 and 2 for legacy ammo label use.	As marked
	Cube See Table A-V Notes 1 and 2 for legacy ammo label use.	As marked
12Q	**Unit Price –** with unit of value = USD.	DD 1348-1A (rp 74-80)
13Q	**Piece Number / Total Pieces** - piece n of x of pieces.	DTR Pt II Table 208-2
18Q	**Cube (Gross)**	As marked
2R	**Condition Code**	DD 1348-1A (rp 71)
4R	**DoD Identification Code (DODIC)**	DTR Pt II App M (TCMD T_6)
S	**Serial Number or Code**	As marked
12S	**Supply Documentation Number** – and suffix code when applicable.	DD 1348-1A (rp 30-44)
13S	**Security Seal Number**	DTR Pt II App M (TCMD T_9, Table M-14)
20S	**Traceability Code/Serial Number**	As generated or marked
25S	**Unique Item Identifier (UII) –** documents as a single value the UII elements of an item unique identification (IUID) mark or the DoD IUID equivalent mark as specified in MIL-STD-130.	Derived from the item IUID mark

Source: https://assist.dla.mil -- Downloaded: 2016-10-21T11:13Z
Check the source to verify that this is the current version before use.

TABLE A-I. 2D (PDF417) bar code data identifier descriptions (Format 06) - Continued.

Format 06 Data Identifier	Format 06 DoD Usage (See Note 1)	Data Sources
1T	**Lot/Batch Number or Traceability Number –** for a group of entities.	DTR Pt II App M (TCMD T_7) DD 1348-1A
30T	**Weapons Stock Number (WSN)**	System of Record
V	**Routing Identifier Code (RIC) – Shipping Activity –** The "From" RIC for shipper.	DD 1348-1A (rp 4-6)
4V	**Ocean Carrier Code –** for SEAVANs.	DTR Pt II App M (TCMD T_9, Table M-14) DTR Pt II App SS
7V	**Ownership Code**	DLM 4000.25-2-M, App 2.3
8V	**Distribution Cognizance Code** – last 2 positions of DoD distribution code used for DD Form 1348-1A linear bar code.	DD 1348-1A (rp 55-56)
17V	**Commercial and Government Entity (CAGE) Code –** The consignor CAGE code for an MSL or the CAGE code for a container ID mark of the company awarded the contract for the item being shipped.	As marked.
6W	**Nomenclature**	System of Record
37Y	**QA Defect Code**	System of Record
86Y	**Purpose Code or Activity Classification Code**	System of Record

TABLE A-I. 2D (PDF417) bar code data identifier descriptions (Format 07).

Format 07 Data Element Identifier	Format 07 DoD Usage (See Note 1)	Data Sources
03	**Project Code**	DD 1348-1A (rp 57-59) DTR Pt II Table 208-2 DTR Pt II App M
04	**Unit Line Number (ULN)** – for unit move MSL.	DTR Pt II Chapter 208 DTR Pt II App M (TCMD T_9, Table M-13, rp 58-64)
05	**Unit Identification Code (UIC)** – for unit move MSL.	DTR Pt II Chapter 208
06	**Bumper Number**	DTR Pt II Chapter 208 DTR Pt II App M (TCMD T_9, Table M-18)
09	**Unit Equipment Description** – for unit move.	DTR Pt II Chapter 208
10	**Model Identifier** – for equipment or vehicle identifier.	DTR Pt II Chapter 208 DTR Pt II App M (TCMD T_5)

Source: https://assist.dla.mil -- Downloaded: 2016-10-21T11:13Z
Check the source to verify that this is the current version before use.

TABLE A-I. 2D (PDF417) bar code data identifier descriptions (Format 07) - Continued.

Format 07 Data Element Identifier	Format 07 DoD Usage (See Note 1)	Data Sources
12	**Cube** – with optional metric unit of value for cargo. Default = cubic feet. See Note 3.	DTR Pt II Table 208-2
15	**Water Commodity/Special Handling Codes**	DTR Pt II Chapter 208 DTR Pt II App M DTR Pt II App KK DTR Pt II App LL
18	**Length** – with optional metric unit of value for cargo. Default = inches. See Note 3.	DTR Pt II Chapter 208 DTR Pt II App M
19	**Width** – with optional metric unit of value for cargo. Default = inches. See Note 3.	DTR Pt II Chapter 208 DTR Pt II App M
20	**Height** – with optional metric unit of value for cargo. Default = inches. See Note 3.	DTR Pt II Chapter 208 DTR Pt II App M
21	**Pallet Identifier**	DTR Pt II App M (TCMD T-9, Table M-22)
23	**Air Dimension Code**	DTR Pt II App M DTR Pt II App BB
24	**Container Number Code** – last five digits of van and other container numbers.	DTR Pt II App M (TCMD T_1/2/3/4, rp 4-8) DTR Pt II App QQ
25	**Port of Embarkation (POE) Code**	DTR Pt II Table 208-2 DTR Pt II App M DTR Pt II App CC DTR Pt II App MM
26	**Port of Debarkation (POD) Code**	DTR Pt II Table 208-2 DTR Pt II App M DTR Pt II App CC DTR Pt II App MM
27	**Consignee DoD Activity Address Code (DODAAC)** – for the receiving ultimate consignee or mark for consignee.	DD 1348-1A DTR Pt II Table 208-2 DTR Pt II App M
28	**Transportation Priority** – 1 through 4.	DTR Pt II Table 208-2 DTR Pt II App M DTR Pt II Para 203 B.3
29	**Consignor DoD Activity Address Code (DODAAC)** – for the shipper or loading activity.	DTR Pt II Table 208-2 DTR Pt II App M
30	**Mode/Method Code** – of shipment.	DTR Pt II App M DTR Pt II App GG

Source: https://assist.dla.mil -- Downloaded: 2016-10-21T11:13Z
Check the source to verify that this is the current version before use.

TABLE A-I. 2D (PDF417) bar code data identifier descriptions (Format 07) - Continued.

Format 07 Data Element Identifier	Format 07 DoD Usage (See Note 1)	Data Sources
32	**Required Delivery Date (RDD)** – may reflect RDD in DDD format or special codes, e.g., expedited shipment and handling (Code 999), Not Mission Capable Supply (NMCS) (Code N__), etc.	DD 1348-1A (rp 62-64) DTR Pt II Table 208-2 DTR Pt II App M
34	**TCMD/Manifest Doc ID Code – Document Identifier Code (DIC)**	DTR Pt II App M DTR Pt II App DD
35	**Text Comment –** the system shall be expecting and be able to accommodate text comment information.	As Required
36	**Serial Number / Package ID** Also see Format 06 DI 'I' for VIN.	DTR Pt II Chapter 208 DTR Pt II App M (TCMD T_5)
38	**Nomenclature**	DD 1348-1A DTR Pt II App M (TCMD T_5/T_6)
39	**Number of Rounds** – of ammunition.	DTR Pt II App M (TCMD T_6)
40	**United Nations (UN) Class/Division Code**	DTR Pt II App M (TCMD T_6)
41	**UN/NA Indicator** – designates UN or North American source for the UN/NA identification number. See Note 4.	DTR Pt II App M (TCMD T_6)
42	**UN/North American ID Number** See Note 4.	DTR Pt II App M (TCMD T_6)
43	**Compatibility Group Code**	DTR Pt II App M (TCMD T_6)
44	**Net Explosive Weight**	DTR Pt II App M (TCMD T_7)
48	**Type Service**	DTR Pt II App GG
49	**Air Commodity/Special Handling Codes**	DTR Pt II App M, TCMD T_8 DTR Pt II App Z
50	**Type Pack Code**	DTR Pt II App M DTR Pt II App UU
51	**SEAVAN Ownership Code**	DTR Pt II App M (TCMD T_2, Table M-5) DTR Pt II App TT
55	**Consignee Distribution (CDIST) Code**	DTR Pt II App M (TCMD T_2, Tables M-4 & M-5, rp 57)
56	**Number of Shipment Units in Van**	DTR Pt II App M (TCMD T_2, Table M-5, rp 58-59)
57	**Number of Pieces in Van**	DTR Pt II App M (TCMD T_2, Table M_5, rp 68-71)
58	**Van Inside Cube** - default = cubic feet.	DTR Pt II App M (TCMD T_2, Table M_5, rp 64-67)

Source: https://assist.dla.mil -- Downloaded: 2016-10-21T11:13Z
Check the source to verify that this is the current version before use.

TABLE A-I. 2D (PDF417) bar code data identifier descriptions (Format 07) - Continued.

Format 07 Data Element Identifier	Format 07 DoD Usage (See Note 1)	Data Sources
59	**Van Length** Default = feet.	DTR Pt II App M (TCMD T_2, Table M_5, rp 13-14)
60	**Van Number** – complete serial number or ISO ID serial number (without check digit or owner code).	DTR Pt II App M (TCMD T_9, Table M-14, rp 56-63)
61	**Check Digit** - of the van number.	DTR Pt II App M (TCMD T_9, Table M-14)
62	**Temperature Range -** shown in Fahrenheit degrees.	DTR Pt II App M (TCMD T_9, Table M-14
63	**Stopoff Number and Consignee DODAAC**	DTR Pt II App M (TCMD T_9, Table M-15, rp 54-65)
67	**FMS Case Number** - foreign military sales case # for MSL.	DTR Pt II Table 208-2
76	**Stopoff Consolidation Code** - stopoff point for delivery.	DTR Pt II App M (TCMD T_3/4 Note for rp 63)

Note 1. For an updated list of Format 06 DIs and Format 07 DEIs selected for use by DoD, refer to the USTRANSCOM AIT web site at http://www.transcom.mil/ait/ (Library > Standards and Formats).

Note 2. In order to provide space in the 2D (PDF417) bar code for multiple supply line item data, the in-the-clear address data is not printed in the 2D (PDF417) bar code for shipment units containing multiple supply line items (multipack or consolidated shipment). The fifth line in the "Ship To" and "Consignee" address blocks are to accommodate alternative addressing options. The "From" address line is structured as 3 lines of 35 characters to accommodate DLA addressing options and to save space on the MSL.

Note 3. To accommodate current automated information systems, US default values are assumed as shown. Metric data values may be used in the 2D (PDF417) bar code for generic MSL shipment descriptions, but the data values shall be marked with metric units using ANSI ASC X12.3 Data Element 355 (Unit or Basis for Measurement) codes. The ANSI ASC X12.3 data elements selected for use are: KG = kilograms, CM = centimeter, CC = cubic centimeter, MR = meter, CR = cubic meter. Decimal values are allowed in the 2D (PDF417) bar code. Human translations of measurements printed on the DoD MSL shall be in MILSTRIP/DLMS unit of issue text and numeric values shall be rounded to the next higher whole number with leading zeros suppressed.

Note 4. Format 07 DEI '41' is the qualifier for DEI '42'. That is, DEI '41' indicates whether the code value in DEI '42' came from the UN or a North American table of values, e.g., International Maritime dangerous goods code, Title 49 CFR, or other source publication.

Note 5. DI '7Q' may be used to encode many different type of measurements (quantity, weight, cube, shape, etc.) It may be used many times within a single 2D (PDF417) bar code; however, each instance of use shall be for the same type of measurement (e.g., it cannot be used for both quantity and weight in the same bar code.) The encoded data element consists of two sub data elements. The digits identify the item count. The last two characters are a machine-readable code from ANSI ASC X12.3 Data Elements 355 (Unit or Basis for Measurement) that identifies the DoD 4100.39-M, Vol. 10, Table 53 supply item unit of issue or the Table 81 supply item unit of measure designations.

Source: https://assist.dla.mil -- Downloaded: 2016-10-21T11:13Z
Check the source to verify that this is the current version before use.

APPENDIX A

TABLE A-II. MSL (generic) 2D (PDF417) bar code format.

Compliance Indicator	Element Separators	Format Header	Format 06 DI	Format 07 DEI	Data Field	Data Format Type/Length	Sample Data without DI/DEI
[)>					Message Header Compliance Indicator		[)>
	RS	06			Data Identifier Format Header		06
	GS		JKUSM		TCN	an17	SW81238350D001XXX
	GS		6JKUSM		TTN Note: The TTN should only be used for unit move cargo documented with a unit move TCN.	n17	12345678901000007
	GS		3D		Ship Date	an4	1090
	GS		9K		TAC	an4	SZZZ
	GS		2L		Ship To Address See Note 1.	an..35+ an..35+ an..35+ an..35+ an..35 See Note 3	1st address line+2nd address line+3rd address line+4th address line+5th address line
	GS		3L		From Address See Note 1.	an..35+ an..35+ an..35 See Note 3	1st address line+2nd address line+3rd address line
	GS		5L		Consignee Address See Note 1.	an..35+ an..35+ an..35+ an..35+ an..35 See Note 3	1st address line+2nd address line+3rd address line+4th address line+5th address line
	GS		51L		Origin Zip Code for SEAVAN point of origin.	an5	45324
	GS		N		NSN See Note 2.	an..13	1234567890123
	GS		2Q		Weight (shipment piece) default = pounds.	an..5+../an2 See Note 4	7760 Or metric: 1759/KG
	GS		13Q		Piece Number /Total Pieces	an..4/an..4	1/1
	GS		4R		DODIC See Note 2.	an4	PL23
	GS		13S		Security Seal Number	an8	90876787
	GS		1T		Lot Number See Note 2.	an..25	MCG77G002-060
	GS		4V		Ocean Carrier Code	an4	SEAU

Source: https://assist.dla.mil -- Downloaded: 2016-10-21T11:13Z
Check the source to verify that this is the current version before use.

TABLE A-II. MSL (generic) 2D (PDF417) bar code format - Continued.

Compliance Indicator	Element Separators	Format Header	Format 06 DI	Format 07 DEI	Data Field	Data Format Type/Length	Sample Data without DI/DEI
	GS		17V		CAGE Code – Consignor.	an5	6R517
	RS	07			Free Form Text Format Header		07
	GS			03	Project Code	an3	9BU
	GS			10	Model Identifier	an..10	KZ456754
	GS			12	Cube (shipment piece)	an..4+../an2 See Note 4	35
	GS			15	Water Commodity/Special Handling Codes	an5	390Z9
	GS			18	Length Default = inches.	n..6+../an2 See Note 4	1239
	GS			19	Width Default = inches.	n..4+../an2 See Note 4	123
	GS			20	Height Default = inches.	n..4+../an2 See Note 4	135
	GS			21	Pallet Identifier	an..6	DOVARC
	GS			23	Air Dimension Code	an1	A
	GS			24	Container Number Code	an5	13579
	GS			25	POE Code	an3	DOV
	GS			26	POD Code	an3	RMS
	GS			27	Consignee DODAAC	an6	W55XGJ
	GS			28	Transportation Priority	n1	1
	GS			29	Consignor DODAAC	an6	SW8123
	GS			30	Method Code	an1	B
	GS			32	RDD	an..3	999
	GS			34	TCMD/Manifest Doc ID Code (header DIC only)	an3	TX1
	GS			35	Text Comment	an..60	NO LINE ITEM DATA
	GS			36	Serial Number	an..13	234567890123
	GS			38	Nomenclature	an..14	Boots
	GS			39	Number of Rounds	n..6	112000
	GS			40	UN Class/Division Code	an2	11
	GS			41	UN/NA Indicator	an2	UN

Source: https://assist.dla.mil -- Downloaded: 2016-10-21T11:13Z
Check the source to verify that this is the current version before use.

TABLE A-II. MSL (generic) 2D (PDF417) bar code format - Continued.

Compliance Indicator	Element Separators	Format Header	Format 06 DI	Format 07 DEI	Data Field	Data Format Type/Length	Sample Data without DI/DEI
	GS			42	UN/NATO ID Number	an4	2766
	GS			43	Compatibility Group Code	an1	Z
	GS			44	Net Explosive Weight	n..6	449800
	GS			48	Type Service	an..10	Frt LTL
	GS			49	Air Commodity/Special Handling Codes	an2	AZ
	GS			50	Type Pack Code	an2	BX
	GS			51	SEAVAN Ownership Code	an4	SEAU
	GS			55	CDIST Code for number of Consignees	an1	M
	GS			56	SUs in Van	n2	12
	GS			57	Pieces in Van	n4	1234
	GS			58	Van Inside Cube	an..4	1234
	GS			59	Van Length	an..2	40
	GS			60	Van Number (complete)	an8	12345678
	GS			61	Check Digit	n1	9
	GS			62	Temperature Range	an..5	F632
	GS			63	Stopoff Number and Consignee DODAAC	n..2+an6	1AF5612
	GS			67	FMS Case Number	an3	CKM
	GS			76	Stopoff Consolidation Code	an1	X
The following sets of data (DI ‘12S’ through ‘12Q’) repeat for each supply line item in the shipment. ISO/IEC 15434 Format 06 envelopes may be used to associate line item specific data (e.g. document number, NSN, quantity, etc.). Each supply document series shall begin with a DI ‘12S’ and terminate with a DI ‘12Q’ code – if either of these two fields are blank, they shall be encoded.							
	RS	06			Data Identifier Format Header		06
	GS		12S		Supply Document Number	an14..15	WK4GEY80110231
	GS		N		NSN	an..15	5310011987585
	GS		4R		DODIC (ammo only)	an4	PL23
	GS		1T		Lot Number (ammo only)	an..25	MCG77G002-060
	GS		7Q		Quantity (Unit of Issue)	n..5+an2 See Note 5	5EA
	GS		V		Routing Identifier Code	an3	S9I

Source: https://assist.dla.mil -- Downloaded: 2016-10-21T11:13Z
Check the source to verify that this is the current version before use.

TABLE A-II. MSL (generic) 2D (PDF417) bar code format - Continued.

Compliance Indicator	Element Separators	Format Header	Format 06 DI	Format 07 DEI	Data Field	Data Format Type/Length	Sample Data without DI/DEI
	GS		2R		Condition Code	an1	A
	GS		8V		Distribution Code	an2	7V
	GS		12Q		Unit Price	n..9+.n2+an3	12345.90USD
	RS	06			Data Identifier Format Header		06
	GS		12S		Supply Document Number	an14..15	WK4GEY80110232
	GS		N		NSN	an..15	5310011987585
	GS		4R		DODIC (ammo only)	an4	PL23
	GS		1T		Lot Number (ammo only)	an..25	MCG77G002-060
	GS		7Q		Quantity (Unit of Issue)	n..5+an2 See Note 5	5EA
	GS		V		Routing Identifier Code	an3	S9I
	GS		2R		Condition Code	an1	A
	GS		8V		Distribution Code	an2	7V
	GS		12Q		Unit Price	n..9+.n2+an3	12345.90USD
	RS EOT				Format Trailer Message Trailer		

Note 1. In order to provide space in the 2D (PDF417) bar code for multiple supply line item data, the in-the-clear address data is not printed in the 2D (PDF417) bar code for shipment units containing multiple supply line items (multipack or consolidated shipment).

Note 2. The Format 06, DI ‘N’, ‘4R’, or ‘1T’ elements shall only be shown in this part of the 2D (PDF417) bar code if TCMD T_6 data or TCMD T-7 data is available as a source. In most cases, NSN information will not be available from TCMD T_6 data for a shipment unit of consolidated multiple line items.

Note 3. The plus symbol (+) is used as a delimiter between the data elements and is part of the data sub-string.

Note 4. To accommodate current automated information systems, US default values are assumed as shown. Metric data values may be used in the 2D (PDF417) bar code for generic MSL shipment descriptions, but the data values shall be marked with metric units using an ANSI ASC X12.3 Data Element 355 (Unit or Basis for Measurement) code. The ANSI ASC X12.3 data elements selected for use are: KG = kilograms, CM = centimeter, CC = cubic centimeter, MR = meter, CR = cubic meter. Decimal values are allowed in the 2D (PDF417) bar code. Human translations printed on the DoD MSL shall be in US standard formats and shall be rounded to the next higher whole number with leading zeros suppressed.

Note 5. The encoded data element consists of two sub data elements. The digits identify the item count. The last two characters are a machine-readable ANSI ASC X12.3 Data Element 355 (Unit or Basis for Measurement) code for the respective unit of issue sourced from the DD Form 1348-1. When printed as human-readable information, the ANSI ASC X12.3 Data Element 355 code is translated to a unit of issue code/abbreviation (see Table I)

.

Source: https://assist.dla.mil -- Downloaded: 2016-10-21T11:13Z
Check the source to verify that this is the current version before use.

APPENDIX A

TABLE A-III. MSL (unit move) 2D (PDF417) bar code format.

Compliance Indicator	Element Separators	Format Header	Format 06 DI	Format 07 DEI	Data Field	Data Format Type/Length	Sample Data without DI/DEI
[)>					Message Header Compliance Indicator		[)>
	RS	06			Data Identifier Format Header		06
	GS		JKUSM		TCN	an17	AWS1EAA$0D00340XX
	GS		6JKUSM		TTN	n17	12345678901000007
	GS		I		VIN	an17	V739GXL1794AB12PZ
	GS		9K		TAC	an4	YZZZ
	GS		2L		Ship To Address.	an..35+an..35+ an..35+an..35+ an..35 See Note 1	1st address line+2nd address line+3rd address line+4th address line+5th address line
	GS		3L		From Address	an..35+an..35+ an..35 See Note 1	1st address line+2nd address line+3rd address line
	GS		5L		Consignee Address	an..35+an..35+ an..35+an..35+ an..35 See Note 1	1st address line+2nd address line+3rd address line+4th address line+5th address line
	GS		51L		Origin Zip Code for SEAVAN point of origin.	an5	45324
	GS		N		NSN	an..15	8115001682275
	GS		2Q		Weight (shipment piece) default = pounds.	an..5+../an2 See Note 2	14000
	GS		13Q		Piece Number/Total Pieces	an..4/an..4	1/1
	GS		4R		DODIC	an4	PL23
	GS		13S		Security Seal Number	an8	90876787
	GS		25S		Unique Item Identifier	an..78	UN077991289123456789 0123
	GS		1T		Lot Number	an..25	MCG77G002-060
	GS		4V		Ocean Carrier Code	an4	SEAU
	RS	07			Free Form Text Format Header		07
	GS			03	Project Code	an3	9BU
	GS			04	ULN	an..7	1234567

Source: https://assist.dla.mil -- Downloaded: 2016-10-21T11:13Z
Check the source to verify that this is the current version before use.

TABLE A-III. MSL (unit move) 2D (PDF417) bar code format - Continued.

Compliance Indicator	Element Separators	Format Header	Format 06 DI	Format 07 DEI	Data Field	Data Format Type/Length	Sample Data without DI/DEI
	GS			05	UIC	an6	WS1EAA
	GS			06	Bumper Number	an..8	HQ-123
	GS			09	Unit Equipment Description	an..20	HELICPR CARGO MH-60K
	GS			10	Model Identifier	an..10	12345ASDFG
	GS			12	Cube (shipment piece)	an..4+../an2 See Note 2	1200
	GS			15	Water Commodity/Special Handling Codes	an5	900Z9
	GS			18	Length Default = inches	n..6+../an2 See Note 2	1239
	GS			19	Width Default = inches.	n..4+../an2 See Note 2	123
	GS			20	Height Default = inches.	n..4+../an2 See Note 2	135
	GS			21	Pallet Identifier	an..6	DOVARC
	GS			23	Air Dimension Code	an1	A
	GS			24	Container Number Code	an5	13579
	GS			25	POE Code	an3	DOV
	GS			26	POD Code	an3	RMS
	GS			27	Consignee DODAAC	an6	W44TYH
	GS			29	Consignor DODAAC	an6	AWA2UC
	GS			30	Method Code	an1	A
	GS			32	RDD	an..3	123
	GS			34	TCMD/Manifest Doc ID Code (header DIC only)	an3	TX1
	GS			35	Text Comment	an..60	60 text characters
	GS			36	Serial Number / Package ID	an..13	1234567890123
	GS			38	Nomenclature	an..14	Parts
	GS			39	Number of Rounds	n..6	112000
	GS			40	UN Class/Division Code	an2	1A
	GS			41	UN/NA Indicator	an2	UN

Source: https://assist.dla.mil -- Downloaded: 2016-10-21T11:13Z
Check the source to verify that this is the current version before use.

TABLE A-III. MSL (unit move) 2D (PDF417) bar code format - Continued.

Compliance Indicator	Element Separators	Format Header	Format 06 DI	Format 07 DEI	Data Field	Data Format Type/Length	Sample Data without DI/DEI
	GS			42	UN/NATO ID Number	an4	2766
	GS			43	Compatibility Group Code	an1	Z
	GS			44	Net Explosive Weight	n..6	449800
	GS			49	Air Commodity/Special Handling Codes	an2	VD
	GS			50	Type Pack Code	an2	BX
	GS			51	SEAVAN Ownership Code	an4	SEAU
	GS			55	CDIST Code	an1	M
	GS			56	SUs in Van	n2	12
	GS			57	Pieces in Van	n4	1234
	GS			58	Van Inside Cube	n..4	1234
	GS			59	Van Length	n..2	40
	GS			60	Van Number (complete)	an8	12345678
	GS			61	Check Digit	n1	9
	GS			62	Temperature Range	an..5	F632
	GS			63	Stopoff Number and Consignee DODAAC	n..2+an6	1AF5612
	GS			76	Stopoff Consolidation Code	an1	X
	RS EOT				Format Trailer Message Trailer		

Note 1. The plus symbol (+) is used as a delimiter between the data elements and is part of the data sub-string.

Note 2. To accommodate current automated information systems, US default values are assumed as shown. Metric data values may be used in the 2D (PDF417) bar code for generic MSL shipment descriptions, but the data values shall be marked with metric units using an ANSI ASC X12.3 Data Element 355 (Unit or Basis for Measurement) code. The ANSI ASC X12.3 data elements selected for use are: KG = kilograms, CM = centimeter, CC = cubic centimeter, MR = meter, CR = cubic meter. Decimal values are allowed in the 2D (PDF417) bar code. Human-readable values printed on the DoD MSL shall be in US standard formats and shall be rounded to the next higher whole number with leading zeros suppressed.

Source: https://assist.dla.mil -- Downloaded: 2016-10-21T11:13Z
Check the source to verify that this is the current version before use.

TABLE A-IV. Unit pack and container identification 2D (PDF417) bar code format.

Compliance Indicator	Element Separators	Format Header	Format 06 DI	Format 07 DEI	Data Field	Data Format Type/Length	Sample Data without DI/DEI
[)>					Message Header Compliance Indicator		[)>
	RS	06			Data Identifier Format Header		06
	GS		4K		Contract Line Item Number (CLIN)	an6	0013AB
	GS		5K		Contractor Shipment Number	an7	PBPA001
	GS		8K		Contract Number	an..21	N00023-90-D-0009
	GS		N		NSN	an13	5950001234567
	GS		17V		CAGE Code	an5	1AAA9
	GS		1P		Part Number	an..16	9988771212SP
	GS		7Q		Quantity (Unit of Issue (UI))	an..5+an2	4EA
Item Unique Identification (IUID) See A.2.5 and the following four examples which use DI 'S' to encode serial numbers and DI '25S' to encode UIIs in the package. The 2D (PDF417) bar code may contain a mix of DIs S and 25S. The encoded serialized data structure follows the common data for each package – the common data is not repeated within the bar code for each NSN. **Example – 1 NSN, quantity of 1 item, serialization is based on one or more numbers.** Use DI 'S' and DI '25S' in the Format 06 envelope to encode the serial number and/or UII for the item. The serial number and UII are thus associated to the same single item in the format envelope. The below example is for 1 item.							
	GS		S		Serial Number or Code	an..30	674A3601
	GS		25S		Unique Item Identifier (UII)	an..50	D1AAA999123VA
Example (legacy only) – 1 NSN, multiple items, serialization is based on one or more numbers per item. The following is a legacy business rule from a previous version of MIL-STD-129 – new systems must be able to read the 2D symbols but should not generate any in this format. In the first ISO/IEC 15434 Format 06 envelope (for multiple items), DI 'S' encodes a serial number and DI '25S' encodes a UII – the serialized numbers (serial or UII) <u>are not</u> linked together. A serial number and/or UII may or may not be encoded for each item. The below example is for four different items with the same NSN: one item (in italics) has a serial number (DI 'S') not used to derive its UII (DI '25S'), one item (underlined) has a serial number used to derive its UII (DI 'S' and '25S'), one item (double underline) has just a serial number (DI 'S'), one item has no serial number or UII and is therefore not listed. The data may be encoded in any order.							
	GS		*S*		*Serial Number or Code*	*an..30*	*674A3602*
	GS		*25S*		*Unique Item Identifier (UII)*	*an..50*	*D1AAA999124VA*
	<u>GS</u>		<u>S</u>		<u>Serial Number or Code</u>	<u>an..30</u>	<u>9B25643M</u>
	<u>GS</u>		<u>25S</u>		<u>Unique Item Identifier (UII)</u>	<u>an..50</u>	<u>D1AAA99B25643M</u>
	<u>GS</u>		<u>S</u>		<u>Serial Number or Code</u>	<u>an..30</u>	<u>674A3603</u>

Source: https://assist.dla.mil -- Downloaded: 2016-10-21T11:13Z
Check the source to verify that this is the current version before use.

TABLE A-IV. Unit pack and container identification 2D (PDF417) bar code format – Continued.

Compliance Indicator	Element Separators	Format Header	Format 06 DI	Format 07 DEI	Data Field	Data Format Type/Length	Sample Data without DI/DEI
Example (new format) – 1 NSN, multiple items, serialization is based on one or more numbers per item. An additional Format 06 envelope (one per item) shall be used for each item to encode item-specific data (e.g. serial number (DI 'S'), UII (DI '25S'), etc.) for the uniquely identified item. Additional information may be associated to each serialized item such as condition code, manufacturer CAGE, etc. A serial number and/or UII may or may not be encoded for each item. The below example is for eight items with the same NSN – however, one item has no UII or serial number and is therefore not listed.							
	RS	06			Data Identifier Format Header		06
	GS		S		Serial Number or Code	an..30	674A3604
	RS	06			Data Identifier Format Header		06
	GS		S		Serial Number or Code	an..30	674A3605
	RS	06			Data Identifier Format Header		06
	GS		25S		Unique Item Identifier (UII)	an..50	06141411A0B9C3D5
	RS	06			Data Identifier Format Header		06
	GS		25S		Unique Item Identifier (UII)	an..50	06141411A0B9C3D6
	RS	06			Data Identifier Format Header		06
	GS		25S		Unique Item Identifier (UII)	an..50	D1AAA99B25972M
	GS		S		Serial Number or Code	an..30	9B25972M
	RS	06			Data Identifier Format Header		06
	GS		S		Serial Number or Code	an..30	674A3606
	GS		25S		Unique Item Identifier (UII)	an..50	D1AAA99B25974M
	RS	06			Data Identifier Format Header		06
	GS		S		Serial Number or Code	an..30	674A3607
	GS		25S		Unique Item Identifier (UII)	an..50	D1AAA99B25975M
Example – Multiple NSNs Prepare a packing list for each NSN following the applicable examples above for 1 NSN.							
	RS EOT				Format Trailer Message Trailer		

Source: https://assist.dla.mil -- Downloaded: 2016-10-21T11:13Z
Check the source to verify that this is the current version before use.

TABLE A-V. Ammunition/Explosives Packaging Label.

Mandatory (M) Optional (O)	Compliance Indicator	Element Separators	Format Header	Format 06 DI	Data Field	Data Format Type/Length	Sample Data without DI/DEI
M	[)>				Message Header Compliance Indicator		[)>
M		RS	06		Data Identifier Format Header		06
Mandatory Package Level Data							
M		GS		20S	Label Traceability Code Format is UMYYMMDDhhmmssssRRNX UM=unit for measurement YY=year MM=month DD=date hh=hour mm=minute, ssss=seconds and hundredths of a second RR=random number NX=label N of X labels See Note 3.	an20 See Note 3	KT020218160123400612
M		GS		2Q	Weight	n..9 See Note 1	1700
O/M		GS		3Q	Weight Units Use of 'LB' is optional. Use of 'KG' is mandatory as applicable.	an2 See Note 3	LB KG
M		GS		18Q	Cube (Gross)	an..9+an2 See Notes 2/3	225CF
Mandatory Stock Item Level Data The stock item level data identifies the NSN or PN set of data (beginning with DI 'N' or DI '1P') and may repeat for the package level set. Entries within each stock item data set may be in any order following DI 'N' or '1P'.							
M		GS		N 1P	NSN or Part Number	an13..15 an..16	1234567890123 1234567890123JB 3456-9992-23456
M		GS		4R	DODIC	an4	P123

Source: https://assist.dla.mil -- Downloaded: 2016-10-21T11:13Z
Check the source to verify that this is the current version before use.

TABLE A-V. Ammunition/Explosives Packaging Label - Continued.

Mandatory (M) Optional (O)	Compliance Indicator	Element Separators	Format Header	Format 06 DI	Data Field	Data Format Type/Length	Sample Data without DI/DEI
M		GS		7Q	Quantity (Unit of Measure) See Note 5.	n..9+an2 See Note 3	25EA
M		GS		10PD	Hazardous Material Code (UN or NA ID Number) See Note 4.	an2+an..4	UN1234 NA3456
M		GS		6W	Nomenclature	an..44	KIT COMPONENT 1
Mandatory Lot Number / Serial Number Level Data Within each NSN or PN data set, multiple serial numbers (beginning with DI 'S') or multiple lot number data sets (beginning with DI '1T') may exist and be repeated. Within the lot number sets, multiple serial numbers may exist and be repeated . Entries within each data set may be in any order. See Note 6 for IUID marking as applicable.							
M		GS		1T	Lot Number	an..17	MCG77G002-161
M		GS		7Q	Quantity (Unit of Measure) See Note 5.	n..9+an2 See Note 3	20EA
M		GS		S	Serial Number or Code	an..30	1234567891
		RS EOT			Format Trailer Message Trailer		
Optional Data Elements The following data elements are optional and may be encoded within the Ammunition/Explosives Packaging Label data structure shown above at the Services discretion to support Service unique requirements and criteria. Upon transfer to another Service, all labels shall contain only the mandatory elements of this table, unless the gaining Service agreeds to accept the Service unique labels.							
O		GS		2R	Condition Code	a1	B
O		GS		1B	Container ID	an2..11	TGHU2962459 WM2040001
O		GS		12S	Document Number	an14	W81YWB63250111
O		GS		14D	Expiration Date (YYYYMMDD)	an8	20090331
O		GS		L	Facility/Building – Storage location	an..14	9097A 0101C0
O		GS		20L	Location/Grid	an2..14	9097A001A002B ABAB
O		GS		7V	Ownership Code	n1	5

Source: https://assist.dla.mil -- Downloaded: 2016-10-21T11:13Z
Check the source to verify that this is the current version before use.

TABLE A-V. Ammunition/Explosives Packaging Label - Continued.

Mandatory (M) Optional (O)	Compliance Indicator	Element Separators	Format Header	Format 06 DI	Data Field	Data Format Type/Length	Sample Data without DI/DEI
O		GS		86Y	Purpose Code or Activity Classification Code	an2	P2 A2
O		GS		20D	QA Cert Date (DDMMMYYY)	an9	03DEC2009
O		GS		37Y	QA Defect Code	an6	2151AW HAN52D
O		GS		1H	QA Stamp	an9..10	FV5872001 1234567890
O		GS		25S	Unique Item Identifier (UII) See Note 6	an..50	
O		GS		30T	Weapons Stock Number (WSN)	an..14	BJ97B462500513

Note 1. The default unit for measurement of DI ‘2Q’ is assumed to be US pounds; if otherwise, a DI ‘3Q’ value shall also be encoded. Decimal values are allowed in the 2D (PDF417) bar code’s quantity fields and, if encoded, the total weight field in the 2D (PDF417) bar code should be rounded to the next whole number. Human-readable information for the total weight shall be rounded to the next whole number.

Note 2. The legacy ammo/explosives label used DI ‘7Q’ for the cube element using meta data of n..9+an2 where an2 is an ANSI ASC X12.3 Data Element 355 (Unit or Basis for Measurement) code referenced in Note 3 below.

Note 3. Ammunition/explosives quantities shall be encoded with a two-character ANSI ASC X12.3 Data Element 355 (Unit or Basis for Measurement) code following the numeric value, as applicable. Metric data values may also be used. The ANSI ASC X12.3 data elements selected for use are: PC= piece, ST=set, BX=box, CN=can, DR=drum, KT=kit, PL=pallet/unit load, CH=container, RL=roll, EA=each, LB=pound, FT=foot, CF=cubic feet, KG=kilograms, CM=centimeter, CC=cubic centimeter, MR=meter, CR=cubic meter. Decimal values are allowed in the 2D (PDF417) bar code’s quantity fields and, if encoded, the total cube field in the 2D (PDF417) bar code should be rounded to the next whole number. Human-readable information for the total cube shall be rounded to the next whole number.

Note 4. The legacy ammo/explosives label used a different meta data format for DI ‘10P’. The legacy label used DI ‘10PU+an..4’ to encode the Title 49 CFR, Part 172.101 United Nations (UN) HAZMAT identification numbers.

Note 5. The Quantity (unit of measure) element was designated for use by the Army Joint Munitions Command, Joint Ordnance Commanders Group, AIT Steering Group published Joint Ammo Package Label Specification (JAPLS) as amended by this standard. The Quantity (unit of measure) is a derived value of the MILSTRIP Quantity (unit of issue) using the DoD 4100.39-M defined quantitative expression for conversion (see Table III UM and UI definitions).

Note 6. DI ‘25S’ is provided for use as an optional element to accommodate IUID marking when the requirement is called out in a contract or policy documents for the respective ammunition or explosive. The 2D (PDF417) bar code may contain a mix of DIs ‘S’ and ‘25S’ in the serial number level data. See A.2.5 and the examples in Table IV for the Format 06 data structure used to associate a serial number with a UII, as applicable.

Source: https://assist.dla.mil -- Downloaded: 2016-10-21T11:13Z
Check the source to verify that this is the current version before use.

CONCLUDING MATERIAL

Custodians:
Army - SM
Navy - SA
Air Force - 69
DLA - DH

Preparing activity:
Army - SM
(Project PACK-2013-003)

Reviewing activities:
Army - AM, AR, AT, AV, CR, EA, GL, MI, MR, MT, PT, TE, TM
Navy - AS, CG, EC, MC, OS, SH
Air Force – 11, 13, 16, 70, 71, 84, 99
DLA - CC, CT, DM, GS3, IS, PS
OSD - SE

Miscellaneous:
USTRANSCOM – USTC

Civil agencies:
GSA - FAS

NOTE: The activities listed above were interested in this document as of the date of this document. Since organizations and responsibilities can change, you should verify the currency of the information above using the ASSIST Online database at https://assist.dla.mil.

Source: https://assist.dla.mil -- Downloaded: 2016-10-21T11:13Z
Check the source to verify that this is the current version before use.