MILITARY SPECIFICATION

SOCKETS, (LEAD, ELECTRONIC COMPONENTS)

GENERAL SPECIFICATION FOR

This specification is approved for use by all Departments and Agencies of the Department of Defense.

1. SCOPE

1.1 Scope. This specification covers the general requirements for individual lead sockets, for insertion through mounting boards or panels.

1.2 Classification.

1.2.1 Terminal types. Lead sockets shall have terminals of the following types, as specified (see 3.1 and figure 1).

Type I - Solderless wrap.
Type II - Printed circuit.
Type III - Solder wire turret.
Type IV - Solder cup.
Type V - Other (see 3.1).
Type VI - Solderless spring contact (no terminal).

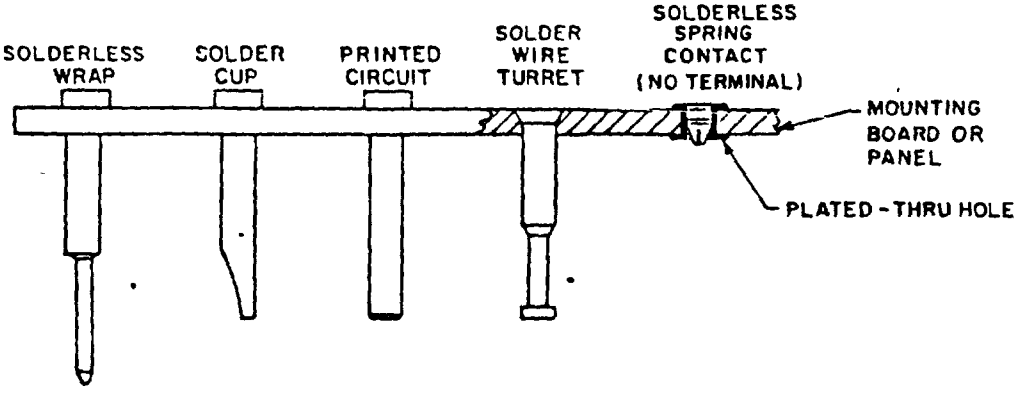

FIGURE 1. Terminal type configurations.

1.3 Military part number. An example of the military part number is shown below:

M83505/4-001

Military designator and specification sheet number
Specification number
Associated detail specification sheet
Dash number as specified in specification sheet

Beneficial comments (recommendations, additions, deletions) and any pertinent data which may be of use in improving this document should be addressed to: Electronic Support Division AFLC/2750 ABW/ES. Gentile Air Force Station, Dayton, OH 45444 by using the self-addressed Standardization Document Improvement Proposal (DD Form 1426) appearing at the end of this document, or by letter.

DISTRIBUTION STATEMENT A. Approved for public release; distribution is unlimited.

Source: https://assist.dla.mil -- Downloaded: 2016-11-25T18:54Z
Check the source to verify that this is the current version before use.

2. APPLICABLE DOCUMENTS

2.1 Government documents.

2.1.1 Specifications and Standards. The following specifications and standards form a part of this specification to the extent specified herein. Unless otherwise specified, the issues of these documents shall be those listed in the issue of the Department of Defense Index of Specifications and Standards (DODISS) and supplement thereto, cited in the solicitation.

SPECIFICATIONS

FEDERAL

QQ-B-626	-	Brass, Leaded and Nonleaded: Rod, Shapes, Forgings, and Flat Products with Finished Edges (Bar and Strip).
QQ-C-530	-	Copper-Beryllium Alloy Bar, Rod, and Wire (Copper Alloy Numbers 172 and 173).
QQ-C-533	-	Copper Beryllium, Alloy Strip.
QQ-N-290	-	Nickel Plating (Electrodeposited).

MILITARY

MIL-P-13949/3	-	Plastic Sheet, Base Material GE, Glass Base, Epoxy Resin, General Purpose, Copper-CLAD.
MIL-C-14550	-	Copper Plating (Electrodeposited).
MIL-G-45204	-	Gold Plating, Electrodeposited.
MIL-C-55330	-	Connectors, Electrical and Fiber Optic, Packaging of.
MIL-P-81728	-	Plating, Tin-Lead (Electrodeposited).

STANDARDS

MILITARY

MIL-STD-105	-	Sampling, Procedures and Tables for Inspection by Attributes.
MIL-STD-202	-	Test Methods for Electronic and Electrical Component Parts.
MIL-STD-275	-	Printed Wiring for Electronic Equipment.
MIL-STD-883	-	Test Methods and Procedures for Microelectronics.
MIL-STD-1130	-	Connections, Electrical, Solderless Wrapped.
MIL-STD-1285	-	Marking for Electrical and Electronic Parts.
MIL-STD-1344	-	Test Methods for Electrical Connectors.
MIL-STD-45662	-	Calibration Systems Requirements.

(Copies of specifications, standards, and other Government documents required by contractors in connection with specific acquisition functions should be obtained from the contracting activity or as directed by the contracting activity.)

2.2 Other publications. The following documents form a part of this specification to the extent specified herein. Unless otherwise specified, the issues of the documents which are DOD adopted shall be those listed in the issue of the DODISS specified in the solicitation. Unless otherwise specified, the issues of documents not listed in the DODISS shall be the issue of the nongovernment documents which is current on the date of the solicitation.

AMERICAN NATIONAL STANDARDS INSTITUTE (ANSI)

ANSI B46.1-78	-	Surface Roughness, Waviness and Lay.
ANSI Y14.5-1973	-	Dimensioning and Tolerancing for Engineering Drawings.

(Application for copies should be addressed to the American Standards Institute, 1430 Broadway, New York, NY 10018.)

Source: https://assist.dla.mil -- Downloaded: 2016-11-25T18:54Z
Check the source to verify that this is the current version before use.

AMERICAN SOCIETY FOR TESTING AND MATERIALS

ASTM B 740 - Standard Specification for Copper-Nickel-Tin Alloy Strip C72900.

(Applications for copies should be addressed to the American Society for Testing and Materials, 1916 Race Street, Philadelphia, PA 19103.)

COPPER DEVELOPMENT ASSOCIATION (CDA)

Copper Alloy No. CA 11000

(Applications for copies should be addressed to the Copper Development Association Inc., 405 Lexington Avenue, New York, NY 10017.)

2.3 Order of precedence. In the event of a conflict between the text of this specification and the references cited herein (except for associated detail specifications, specification sheet or MS standards), the text of this specification shall take precedence. Nothing in this specification, however, shall supersede applicable laws and regulations unless a specific exemption has been obtained.

3. REQUIREMENTS

3.1 Specification sheets. The individual item requirements shall be as specified herein and in accordance with the applicable specification sheets. In the event of any conflict between requirements of this specification and the specification sheets, the latter shall govern.

3.2 Qualification. Lead sockets furnished under this specification shall be products which are qualified for listing on the applicable qualified products list at the time set for opening of bids (see 4.5 and 6.3).

3.3 Material. The material shall be as specified herein. However, when a definite material is not specified, a material shall be used which will enable the sockets to meet the performance requirements of this specification. Acceptance or approval of any consistuent material shall not be construed as a guaranty of the acceptance of the finished product.

3.3.1 Socket (including termination). See figure 2.

3.3.1.1 Spring contact. The spring contact portion of the socket shall be made of beryllium copper in accordance with QQ-C-530 or QQ-C-533, or copper-tin-nickel spinodial alloy C72900 in accordance with ASTM B 740.

3.3.1.1.1 Spring contact finish. The spring contact finish shall be gold, type I, grade C, class 0 (minimum thickness 0.000030 inch) in accordance with MIL-G-45204, over nickel (thickness of 0.000030 - 0.000150 inch) in accordance with QQ-N-290. When a localized finish is used, the finish and underplate shall be as specified above but the location of the finish shall conform to detail A of figure 2. When the spring contact has been manufactured from prefinished strip, the absence of finish in the area where the contact was removed from the strip is acceptable provided it is a nonfunctional area and any corrosion formed as a result of the corrosive atmosphere test does not creep into the contact engagement area.

3.3.1.2 Outer sleeve (inluding termination). The sleeve and termination portion of the socket shall be made of brass in accordance with QQ-B-626 or copper in accordance with Copper Development Association C11000.

3.3.1.2.1 Outer sleeve (including termination) finish. The finish for the sleeve shall be one of the following as specified (see 3.1).

a. Gold type I, grade C, class 00 (minimum thickness of 0.000020 inch) in accordance with MIL-G-45204 over nickel (thickness 0.000030 - 0.000150 inch) in accordance with QQ-N-290.

Source: https://assist.dla.mil -- Downloaded: 2016-11-25T18:54Z
Check the source to verify that this is the current version before use.

b. Tin-lead in accordance with MIL-P-81728 (minimum thickness of 0.000180 inch) over nickel (thickness of 0.000030 - 0.000150 inch) in accordance with QQ-N-290 or copper in accordance with MIL-C-14550. For printed circuit terminations (type II), the tin-lead finish shall be 50 to 70 percent tin; for all other terminations, the tin-lead finish shall be 5 percent minimum lead. For tin-lead finished copper sleeves, nickel or copper underplate is not required.

3.4 Design and construction. Sockets shall be of the design, construction, and physical dimensions specified (see 3.1). The entry to the socket shall be bevelled, chamfered or tapered to facilitate the engagement of the component lead into the socket (except type VI socket). The lead socket sleeve and terminal shall be of machined one piece construction. The material shall be brass per QQ-B-626. The body shall provide a means of retention to a mounting board as specified (see 3.1) and figure 2.

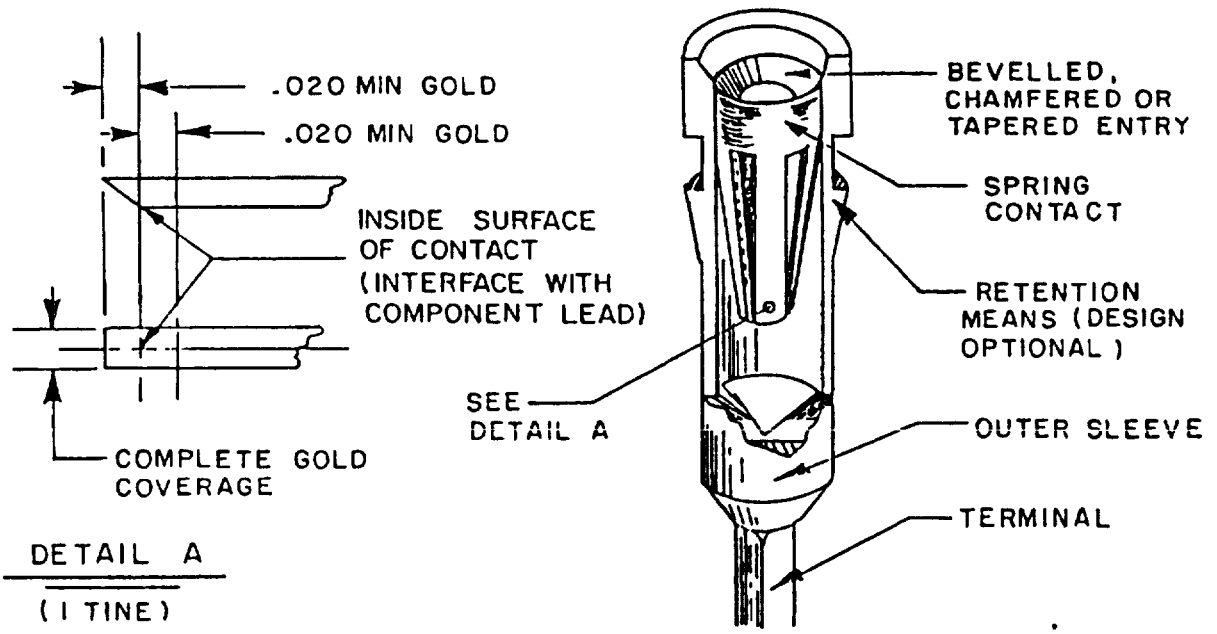

FIGURE 2. General configuration.

3.4.1 Temperature rating. Part numbers applicable to tin finishes shall have a temperature rating of -40°C to +105°C. Unless otherwise specified (see 3.1) part numbers applicable to gold finish (plating or inlay) contact engagement area shall have a temperature rating of -55°C to +125°C.

3.4.2 Wire termination. Unless otherwise specified wire terminations shall conform to figure 1 and shall be as specified (see 3.1).

3.4.2.1 Solderable terminals. Terminals intended for soldering shall be designed so that there shall be no solder wicking into the lead engagement chamber.

3.4.2.2 Solderless wrap terminals. Type I terminals intended for solderless wrap applications shall conform to the requirements of MIL-STD-1130.

3.5 Performance.

Source: https://assist.dla.mil -- Downloaded: 2016-11-25T18:54Z
Check the source to verify that this is the current version before use.

3.5.1 Insertion force. The maximum insertion force shall be as specified (see 3.1 and 4.7.2). There shall be no damage to the contact retention member nor shall the contact retention member be displaced from its original location during this test.

3.5.2 Withdrawal force. The spring contact within the socket shall hold the test pin with the .5 ounce minimum withdrawal force applied (see 4.7.3).

3.5.3 Socket retention. There shall be no damage or loosening of the socket from the mounting board after the socket retention test (see 4.7.4).

3.5.4 Contact resistance. The initial resistance shall not exceed 15 milliohms and after the durability and corrosive atmosphere test, the contact resistance shall not exceed 30 milliohms (see 4.7.5).

3.5.5 Terminal strength (type I only). Testing of terminals shall not result in damaging of the terminal or the socket contact (see 4.7.6.1 through 4.7.6.2).

3.5.6 Vibration. During vibration, there shall be no interruption in continuity greater than 1 microsecond of the test circuit which incorporates mated contacts. There shall be no physical or mechanical damage to the mounted socket contacts. After the test, the sockets shall meet the contact resistance requirement of 3.5.4 and the contact withdrawal force requirement of 3.5.2 (see 4.7.7).

3.5.7 Mechanical shock. During the test there shall be no interruption in continuity greater than 1 microsecond of the test circuit which incorporates mated contacts. There shall be no physical damage to the socket (see 4.7.8).

3.5.8 Socket durability. After 50 insertions and removals, sockets shall show no evidence of cracking or breaking. The socket shall meet the contact resistance requirement of 3.5.4 and the contact withdrawal force requirement of 3.5.2 (see 4.7.9).

3.5.9 Thermal shock. There shall be no evidence of physical damage to the socket. The socket shall be capable of being mated with the maximum test gauge without damage to the socket or the gauge (see 4.7.10).

3.5.10 Low-level circuit. The socket shall show no electrical discontinuity and the contact resistance requirement of 3.5.4 shall not be exceeded (see 4.7.11).

3.5.11 Corrosive atmosphere. There shall be no evidence of porous plating or exposure of base metal on the contacting surfaces and the contact resistance requirement of 3.5.4 shall not be exceeded (see 4.7.12 and 6.5.1).

3.5.12 Solderability (except type I terminals). Terminations shall withstand the test (see 4.7.13).

3.5.13 Resistance to soldering heat (except type I terminals). Sockets shall withstand the test without damage. There shall be no solder wicking into the lead engagement area (see 4.7.14). After the test, sockets shall meet the withdrawal force requirement of 3.5.2 and the spring contact retention requirement of 3.5.14.

3.5.14 Spring contact retention. During testing, the spring contact shall not separate from the socket sleeve (see 4.7.15).

3.6 Marking. Sockets shall be marked in accordance with method I of MIL-STD-1285, and shall include the military part number (see 3.1), the manufacturer's name or code symbol, and date code.

3.7 Workmanship. Sockets shall be processed in such a manner as to be uniform in quality and shall be free from burrs, crazing, cracks, voids, pimples, chips, blisters, pinholes, sharp cutting edges, and other defects that will adversely affect life, serviceability, or appearance.

Source: https://assist.dla.mil -- Downloaded: 2016-11-25T18:54Z
Check the source to verify that this is the current version before use.

4. QUALITY ASSURANCE PROVISIONS

4.1 Responsibility for inspection. Unless otherwise specified in the contract, the contractor is responsible for the performance of all inspection requirements as specified herein. Except as otherwise specified in the contract, the contractor may use his own or any other facilities suitable for the performance of the inspection requirements specified herein, unless disapproved by the Government. The Government reserves the right to perform any of the inspections set forth in the specification where such inspections are deemed necessary to assure supplies and services conform to prescribed requirements.

4.1.1 Responsibility for compliance. All items must meet all requirements of sections 3 and 5. The inspection set forth in this specification shall become a part of the contractor's overall inspection system or quality program. The absence of any inspection requirements in the specification shall not relieve the contractor of the responsibility of assuring that all products or supplies submitted to the Government for acceptance comply with all requirements of the contract. Sampling in quality conformance does not authorize submission of known defective material, either indicated or actual, nor does it commit the Government to acceptance of defective material.

4.1.2 Test equipment and inspection facilities. Test and measuring equipment and inspection facilities of sufficient accuracy, quality, and quantity to permit performance of the required inspection shall be established and maintained by the contractor. The establishment and maintenance of a calibration system to control the accuracy of the measuring and test equipment shall be in accordance with MIL-STD-45662.

4.2 Classification of inspections. The inspections specified herein are classified as follows:

a. Materials inspection (see 4.3).

b. Qualification inspection (see 4.5).

c. Quality conformance inspection (see 4.6).

4.3 Materials inspection. Materials inspection shall consist of certification supported by verifying data that the materials, as specified herein and on the specification sheet (see 3.1), used in fabricating the sockets, are in accordance with the applicable referenced specifications or requirements prior to such fabrication.

4.4 Inspection conditions. Unless otherwise specified herein, all inspections shall be performed in accordance with the test conditions specified in the general requirements of MIL-STD-202 and MIL-STD-1344.

4.5 Qualification inspection. Qualification inspection shall be performed at a laboratory acceptable to the Government (see 6.3) on sample units produced with equipment and procedures normally used in production.

4.5.1 Sample size.

4.5.1.1 Single submission. Sixty-four sockets shall be subjected to qualification inspection.

4.5.2 Inspection routine. The sample shall be subjected to the inspections specified in table I, in the order shown. All sample units shall be subjected to the inspections of group I. The sample shall be divided into 4 groups of 16 units each and subjected to the inspections for their particular group.

Source: https://assist.dla.mil -- Downloaded: 2016-11-25T18:54Z
Check the source to verify that this is the current version before use.

TABLE I. Qualification inspection.

Inspection	Requirement paragraph	Method paragraph
Group I (64 sample units)		
Visual and mechanical examination 1/ - - - - -	3.1, 3.3, 3.4, 3.6, and 3.7	4.7.1
Insertion force- - - - - - - - - - - - - - - - -	3.5.1	4.7.2
Withdrawal force - - - - - - - - - - - - - - - -	3.5.2	4.7.3
Socket retention - - - - - - - - - - - - - - - -	3.5.3	4.7.4
Contact resistance - - - - - - - - - - - - - - -	3.5.4	4.7.5
Group II (16 sample units)		
Terminal strength (type I only)- - - - - - - -	3.5.5	4.7.6
Vibration- - - - - - - - - - - - - - - - - - - -	3.5.6	4.7.7
Mechanical shock - - - - - - - - - - - - - - - -	3.5.7	4.7.8
Socket durability- - - - - - - - - - - - - - - -	3.5.8	4.7.9
Thermal shock- - - - - - - - - - - - - - - - - -	3.5.9	4.7.10
Spring contact retention - - - - - - - - - - - -	3.5.14	4.7.15
Group III (16 sample units)		
Low-level circuit- - - - - - - - - - - - - - - -	3.5.10	4.7.11
Corrosive atmosphere - - - - - - - - - - - - - -	3.5.11	4.7.12
Group IV (16 sample units)		
Solderability (except type I terminals) 2/ - -	3.5.12	4.7.13
Group V (16 sample units)		
Resistance to soldering heat (except type I terminals) 2/ - - - - - - - - - - - - - - - - -	3.5.13	4.7.14

1/ Four randomly selected units shall be measured for dimensional acceptability. If all pass, no further dimensional testing is required. If any unacceptable values are recorded, the entire sample must be examined for dimensional compliance.

2/ Perform visual and mechanical.

4.5.3 Failures. One or more failures shall be cause for refusal to grant qualification approval.

4.5.4 Retention of qualification. To retain qualification, the contractor shall forward a report on group A inspection at 12-month intervals to the qualifying activity. The qualifying activity shall establish the initial reporting date. The report shall consist of.

a. A summary of the results of the tests performed for inspection of product for delivery (group A) (see 4.6.1.2), indicating, as a minimum, the number of lots that have passed and the number that have failed. The results of tests of all reworked lots shall be identified and accounted for.

b. A summary of the results of tests performed for periodic inspection (group B) (see 4.6.2.1), including the number and mode of failures. The summary shall include results of all periodic inspection tests performed and completed during the 36-month period. If the test results indicate nonconformance with specification requirements, and corrective action acceptable to the qualifying activity has not been taken, action may be taken to remove the failing product from the qualified products list.

c. In the event that the production facility of the qualified product is moved or the products are manufactured at other plants, the requirements necessary to retain qualification listing will be determined by the qualifying activity.

Source: https://assist.dla.mil -- Downloaded: 2016-11-25T18:54Z
Check the source to verify that this is the current version before use.

Failure to submit either report within 30 days after the end of each reporting period may result in loss of qualification for the product. In addition to the periodic submission of inspection data, the contractor shall immediately notify the qualifying activity when the inspection data indicates failure of the qualified product to meet the requirements of this specification.

In the event that no production occurred during the reporting period, a report shall be submitted certifying that the company still has the capabilities and facilities necessary to produce the item. If during the 36-month reporting period there has been no production, the manufacturer may be required, at the discretion of the qualifying activity, to submit the product to testing in accordance with the qualification inpection requirements.

4.6 Quality conformance inspection.

4.6.1 Inspection of product for delivery. Inspection of product for delivery shall consist of group A inspection.

4.6.1.1. Inspection lot. An inspection lot shall consist of all sockets of the same configuration produced under essentially the same conditions, and offered for inspection at one time.

4.6.1.2 Group A inspection. Group A inspection shall consist of the inspections specified in table II, in the order shown.

4.6.1.2.1 Sampling plan. Statistical sampling and inspection shall be in accordance with MIL-STD-105 for general inspection level II. The acceptable quality level (AQL) shall be as specified in table II. Major and minor defects shall be as defined in MIL-STD-105.

4.6.1.2.2 Rejected lots. If an inspection lot is rejected, the contractor may rework it to correct the defects, or screen out the defective units, and resubmit for reinspection. Resubmitted lots shall be inspected using tightened inspection. Such lots shall be separated from new lots, and shall be clearly identified as reinspected lots.

TABLE II. Group A inspection.

Inspection	Requirement paragraph	Test method paragraph	AQL (percent defective)	
			Major	Minor
Visual and mechanical examination - - - - - - - -	3.1. 3.3, 3.4, 3.6, and 3.7	4.7.1	1.0	2.5
Insertion force - - - - - - -	3.5.1	4.7.2	0	2.5
Withdrawal force- - - - - - -	3.5.2	4.7.3	1/ .65	---

1/ Inspection level for this characteristic is S2.

4.6.2 Periodic inspection. Periodic inspection shall consist of group B inspection. Except where the results of these inspections show noncompliance with the applicable requirements (see 4.6.2.1.2), delivery of products which have passed group A shall not be delayed pending the results of these periodic inspections.

4.6.2.1 Group B inspection. Group B inspection shall consist of the inspections specified in table I, in the order shown. Group B inspection shall be made on sample units from lots which have been subjected to and have passed the group A inspection.

4.6.2.1.1 Sampling plan. Eight sample sockets from those covered by a single specification sheet shall be selected at random from items produced every 36 months. The sample units shall be divided into 4 groups of 2 units each and subjected to the inspections for their particular group.

Source: https://assist.dla.mil -- Downloaded: 2016-11-25T18:54Z
Check the source to verify that this is the current version before use.

4.6.2.1.2 Failures. If one or more sample units fail to pass group B inspection, the entire sample shall be considered to have failed.

4.6.2.1.3 Disposition of sample units. Sample units which have been subjected to group B inspection shall not be delivered on the contract or purchase order.

4.6.3 Packaging inspection. The sampling and inspection of the preservation, packing, and container marking shall be in accordance with the requirements of MIL-C-55330.

4.7 Methods of inspection.

4.7.1 Visual and mechanical inspection. Sockets shall be inspected to verify that the dimensions, materials, design, construction, and workmanship are in accordance with the applicable requirements (see 3.1, 3.3, 3.4, 3.6, and 3.7).

4.7.2 Insertion force (see 3.5.1). The initial force required to fully insert and withdraw the maximum diameter test gauge (see figure 3) shall be measured. The test restrictions are as follows:

a. The vertical axis of the test pin shall coincide with the vertical axis of the socket.

b. The test gauge shall travel along the vertical axis of the socket.

c. The speed of insertion of the test gauges into the socket contacts shall not exceed 2 inches per minute for constant-speed machines, or the rate of loading shall not exceed 80 pounds per minute for contact-rate-of-force machines.

d. Scale mechanism shall have no dasnpots or other damping devices.

e. Scales shall be calibrated in 1/8-pound steps or less, and shall be accurate to within ±5 percent.

4.7.3 Withdrawal force (see 3.5.2). After two withdrawals of the maximum diameter insertion and withdrawal force test gauges (see figure 3), the individual unmating force shall be measured using the minimum diameter test gauge. The test gauge shall be inserted to the depth specified (see 3.1) and the withdrawal force of one-half ounce minimum shall be applied to the test gauge. The test restrictions of 4.7.2 apply.

4.7.4 Socket retention (see 3.5.3). With the socket mounted in an appropriate fixture, a 7 1/2 pound axial load shall be applied to terminals intended for solderless wrap applications. A 7 1/2 pound axial load shall be applied in both directions to terminals intended for solder appliations. There shall be no damage or loosening of the socket from the mounting board.

4.7.5 Contact resistance (see 3.5.4). The contact resistance shall be measured as specified in figure 4. The contacts shall be measured on each test specimen in accordance with method 3004 of MIL-STD-1344. The following shall apply:

a. Socket contact.

b. Brass or copper base alloy gauge.

c. Plating of the test gauge and socket spring contact to be the same general materials.

d. Initial and final contact resistance shall not exceed the requirements of 3.5.4.

e. Current shall be 100 milliamperes.

f. Minimum size test gauge shall be used (see figure 3).

Source: https://assist.dla.mil -- Downloaded: 2016-11-25T18:54Z
Check the source to verify that this is the current version before use.

4.7.6 Terminal strength (see 3.5.5).

4.7.6.1 Bend test (type I only). The socket shall be secured to the mounting board by its normal means and then tested in accordance with method 211, test condition C, of MIL-STD-202, with test load of 1 pound minimum. The bend shall be only 30° each side of center.

4.7.6.2 Torque test (type I only). Sockets shall be tested in accordance with method 211, test condition E, of MIL-STD-202, with 2 ounce-inches torque.

4.7.7 Vibration (see 3.5.6). Sockets shall be tested in accordance with method 2005 of MIL-STD-1344. The following details shall apply:

a. Test condition: III.

b. Preparation: Mated with a dummy test circuit (see figure 5 for setup).

c. At the conclusion of this test, the contact resistance shall be measured in accordance with 4.7.5 and the contact withdrawal force shall be measured in accordance with 4.7.3.

4.7.8 Mechanical shock (see 3.5.7). The socket shall be tested in accordance with method 2004 of MIL-STD-1344. The following details shall apply:

a. Mounting method and accessories: Mounted by normal means and suitable monitoring circuit to detect any interruption greater than 1 microsecond.

b. Test condition letter: G.

c. Number of blows: One blow in both directions along each of three mutually perpendicular axes for a total of six shocks.

d. Preparation: Mated with a dummy test circuit (see figure 5 for setup).

4.7.9 Socket durability (see 3.5.8). Each unit shall be subjected to 50 mating and unmating cycles using the test gauge (see figure 3). At the conclusion of the test, the contact resistance shall be measured in accordance with 4.7.5 and the contact withdrawal force shall be measured in accordance with 4.7.3.

4.7.10 Thermal shock (see 3.5.9). Sockets shall be tested in accordance with method 1003 of MIL-STD-1344. The following details shall apply:

a. For gold contacts: -55°C to +125°C.

b. For tin/lead contact: -40°C to +105°C.

c. Test measurement: The sockets shall be capable of mating and unmating at the temperature extremes (force shall be unmonitored) during the fifth cycle, without damage to either component.

4.7.11 Low-level circuit (see 3.5.10). The low level circuit test procedure shall be in accordance with method 3002 of MIL-STD-1344. The following details shall apply:

a. Environmental conditioning not required.

b. Seven readings.

4.7.12 Corrosive atmosphere (see 3.5.11 and 6.5.1). Mated sockets shall be exposed to a concentrated sulphur atmosphere. The following details shall apply:

a. Sockets that have been mated with a suitable test gauge and preconditioned by being subjected to two unmonitored insertions of the insertion force gauge (see figure 3) shall be exposed to a 10-25 ppm solution of ammonium polysulfide at a relative humidity of 60 percent or higher at room temperature for 4 hours in an enclosed chamber.

b. At the conclusion of the sulphur atmosphere exposure, the low level of the undisturbed mated socket shall be measured in accordance with 4.7.11.

Source: https://assist.dla.mil -- Downloaded: 2016-11-25T18:54Z
Check the source to verify that this is the current version before use.

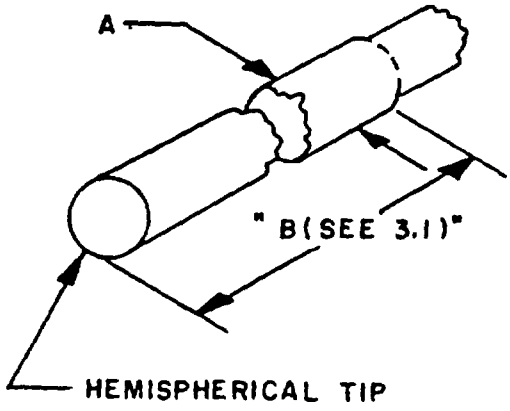

GAUGE SHAFT

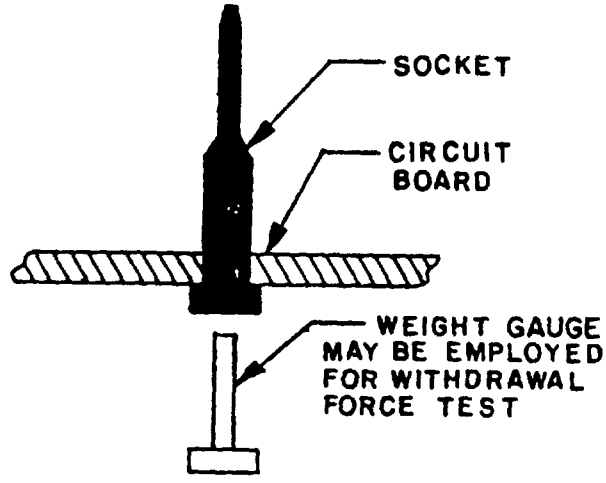

For acceptable socket mating lead dia	Use gauge A dia	
	Min +.0002 -.0000	Max +.0000 -.0002
.016 to .021	.0160	.210
.021 - .030	.210	.0300
.030 - .040	.0300	.0400
.040 - .050	.0400	.0500
.017 - .019	.0170	.0190
.018 - .020	.0180	.0200
.030 - .033	.0300	.0330

Inches	mm
.0000	0.000
.0002	0.005
.0160	0.406
.016	0.41
.0170	0.432
.017	0.43
.0180	0.457
.018	0.46
.0190	0.483
.019	0.48
.0200	0.508
.020	0.51
.0210	0.533
.021	0.53
.0300	0.762
.030	0.76
.0330	0.838
.033	0.84
.0400	1.016
.040	1.02
.0500	1.270
.050	1.27

NOTES:
1. Dimensions are in inches.
2. Metric equivalents are given for general information only.
3. Material: Carbon steel, finish 16 microinches maximum.

FIGURE 3. Mating and unmating test gauges.

Source: https://assist.dla.mil -- Downloaded: 2016-11-25T18:54Z
Check the source to verify that this is the current version before use.

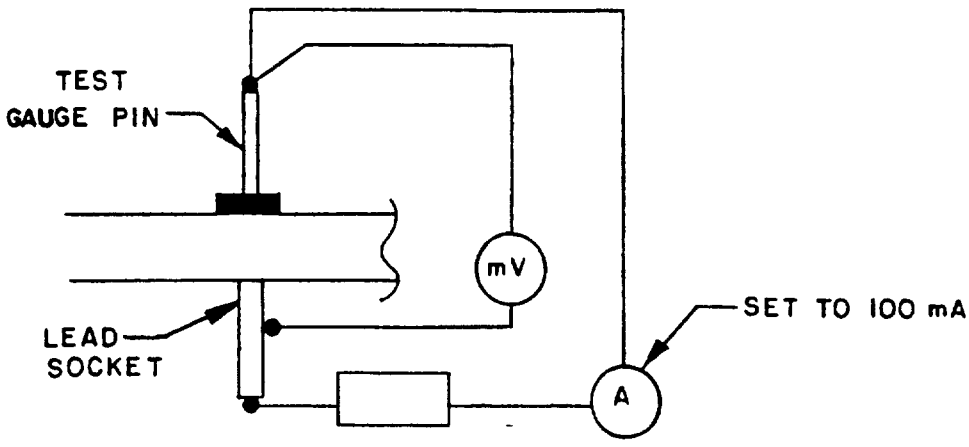

FIGURE 4 Contact resistance

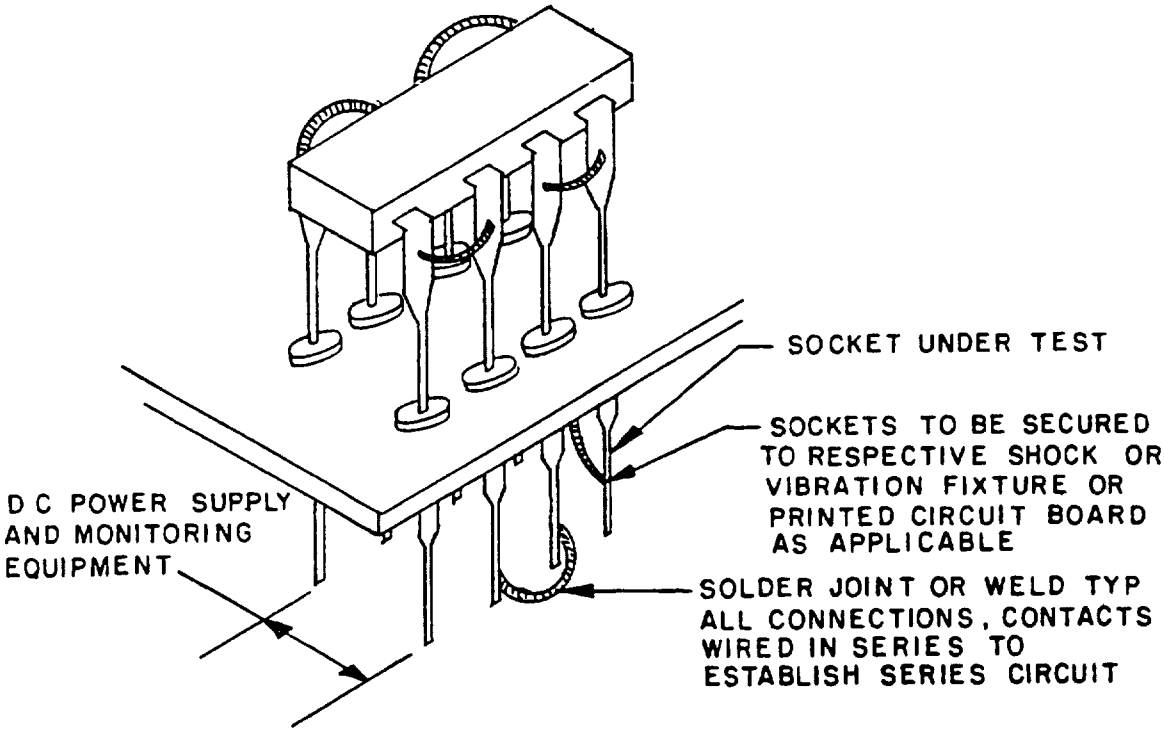

FIGURE 5. Vibration and mechanical shock test setup.

Source: https://assist.dla.mil -- Downloaded: 2016-11-25T18:54Z
Check the source to verify that this is the current version before use.

4.7.13 Solderability (except type I terminals) (see 3.5.12). Each terminal shall be subjected to method 208 of MIL-STD-202.

4.7.14 Resistance to soldering heat (except type I terminals) (see 3.5.13). Sockets shall be tested in accordance with method 210 of MIL-STD-202. The following details shall apply:

a. Special preparation of specimens: Samples shall be suitably masked to prevent solder from entering the socket. The board shall be wave or float soldered.

b. Depth of immersion in the molten solder: Sockets shall be immersed to the bottom of the mounting board or panel.

c. Test condition letter: E.

d. Measurements after test: Sockets shall be subjected to the withdrawal force and spring contact retention tests of 4.7.3 and 4.7.15, respectively.

4.7.15 Spring contact retention (see 3.5.14). A 7.5 pounds axial force shall be applied against the spring tines, with the socket mounted in an appropriate fixture. The direction of the force shall be away from the panel. The termination portion of the socket sleeve may be removed to permit application of the force.

5. PACKAGING

5.1 Packaging requirements. The requirements for packaging shall be in accordance with MIL-C-55330.

6. NOTES

6.1 Intended use. Sockets covered by this specification are intended for use on a printed circuit board and terminals may be soldered to the printed circuit board unless otherwise noted in the specification sheets.

6.1.1 Application restrictions. Sockets shall not be used in applications requiring use of integrated circuits that have been screened to class S reliability levels of MIL-STD-883, Test Methods and Procedures for Microelectronics, and they shall not be used in applications requiring integrated circuits screened to class B levels other than fixed ground installations for which they have been specifically approved by the contracting activity.

6.2 Ordering data.

6.2.1 Acquisition requirements. Acquisition documents should specify the following:

a. Title, number, and date of this specification.

b. Title, number and date of the applicable specification sheet, and the complete part number (see 3.1).

6.3 Qualification. With respect to products requiring qualification, awards will be made only for products which are at the time set for opening of bids, qualified for inclusion in the applicable qualified products list, whether or not such products have actually been so listed by that date. The attention of the contractors is called to these requirements, and manufacturers are urged to arrange to have the products that they proposed to offer to the Federal Government tested for qualification in order that may be eligible to be awarded contacts or orders for the products covered by this specification. The activity responsible for the qualified products list is AFLC/LOIE, Wright-Patterson AFB, OH 45433; however, information pertaining to qualification of products may be obtained from the Defense Electronics Supply Center (DESC-E), Engineering Standardization Directorate, Dayton, OH 45444.

Source: https://assist.dla.mil -- Downloaded: 2016-11-25T18:54Z
Check the source to verify that this is the current version before use.

6.4 Noncompliance. If a sample fails to pass group B inspection, the manufacturer shall notify the qualifying activity and the cognizant inspection activity of such failure and take corrective action on the materials or processes, or both, as warranted, and on all units of product which can be corrected and which were manufactured under essentially the same materials and processes, and which are considered subject to the same failure. Acceptance and shipment of the product shall be discontinued until corrective action, acceptable to the qualifying activity has been taken. After the corrective action has been taken, group B inspection shall be repeated on additional sample units (all inspections, or the inspection which the original sample failed, at the option of the qualifying activity). Group A inspection may be reinstituted; however, a final acceptance and shipment shall be withheld until the group B inspection has shown that the corrective action was successful. In the event of failure after reinspection, information concerning the failure shall be furnished to the cognizant inspection activity and the qualifying activity.

6.5 Definitions.

6.5.1 Corrosive atmosphere. The corrosive atmosphere test is intended to reveal imperfections in the plated contacting surfaces such as pores, scratches, or incomplete plating coverage. It will also reveal defects such as low contact pressure. However, it is not intended to correlate directly with long term atmospheric information (see 3.5.11).

6.6 Dimensions. Dimensions are in inches. Metric equivalents (to the nearest .01 mm) are given for general information only and are based upon 1 inch - 25.4 mm.

6.7 Installation. Unless othewise specified (see 3.1), sockets shall be installed as shown on figure 6.

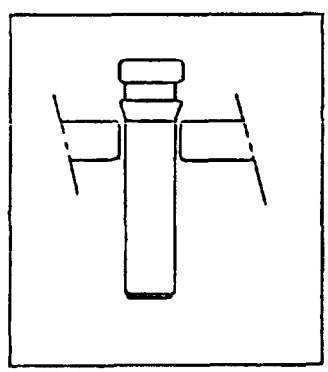

STEP 1
Drop lead socket into recommended hole

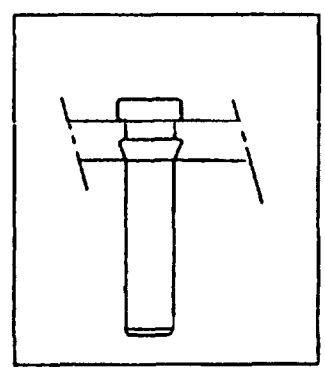

STEP 2
Press until seated with flat tool

FIGURE 6. Installation.

6.8 Changes from previous issue. Asterisks are not used in this revision to identify change with respect to the previous issue due to the extensiveness of the changes.

Custodians:
Army - CR
Navy - EC
Air Force - 85

Review activities:
Air Force - 11, 17, 99
DLA - ES

User activity:
Air Force - 19

Preparing activity:
Air Force - 85

Agent:
DLA - ES

(Project 5935-3520)

Source: https://assist.dla.mil -- Downloaded: 2016-11-25T18:54Z
Check the source to verify that this is the current version before use.

INSTRUCTIONS: In a continuing effort to make our standardization documents better, the DoD provides this form for use in submitting comments and suggestions for improvements. All users of military standardization documents are invited to provide suggestions. This form may be detached, folded along the lines indicated, taped along the loose edge *(DO NOT STAPLE)*, and mailed. In block 5, be as specific as possible about particular problem areas such as wording which required interpretation, was too rigid, restrictive, loose, ambiguous, or was incompatible, and give proposed wording changes which would alleviate the problems. Enter in block 6 any remarks not related to a specific paragraph of the document. If block 7 is filled out, an acknowledgement will be mailed to you within 30 days to let you know that your comments were received and are being considered.

NOTE: This form may not be used to request copies of documents, nor to request waivers, deviations, or clarification of specification requirements on current contracts. Comments submitted on this form do not constitute or imply authorization to waive any portion of the referenced document(s) or to amend contractual requirements.

(Fold along this line)

(Fold along this line)

DEPARTMENT OF THE AIR FORCE

NO POSTAGE NECESSARY IF MAILED IN THE UNITED STATES

OFFICIAL BUSINESS
PENALTY FOR PRIVATE USE $300

BUSINESS REPLY MAIL
FIRST CLASS PERMIT NO 73236 WASHINGTON D C.
POSTAGE WILL BE PAID BY THE DEPARTMENT OF THE AIR FORCE

Electronic Support Division
AFLC/2750 ABW/ES
Gentile Air Force Station
Dayton, OH 45444

Source: https://assist.dla.mil -- Downloaded: 2016-11-25T18:54Z
Check the source to verify that this is the current version before use.

STANDARDIZATION DOCUMENT IMPROVEMENT PROPOSAL

(See Instructions – Reverse Side)

1. DOCUMENT NUMBER	2. DOCUMENT TITLE

3a. NAME OF SUBMITTING ORGANIZATION	4. TYPE OF ORGANIZATION *(Mark one)*
	☐ VENDOR
b. ADDRESS *(Street, City, State, ZIP Code)*	☐ USER
	☐ MANUFACTURER
	☐ OTHER *(Specify)* _____

5. PROBLEM AREAS

a. Paragraph Number and Wording:

b. Recommended Wording:

c. Reason/Rationale for Recommendation

6. REMARKS

7a. NAME OF SUBMITTER *(Last, First, MI)* – Optional	b. WORK TELEPHONE NUMBER *(Include Area Code)* – Optional
c. MAILING ADDRESS *(Street, City, State, ZIP Code)* – Optional	8. DATE OF SUBMISSION *(YYMMDD)*

(TO DETACH THIS FORM, CUT ALONG THIS LINE)

Source: https://assist.dla.mil -- Downloaded: 2016-11-25T18:54Z
Check the source to verify that this is the current version before use.

DD FORM 1426, 82 MAR — PREVIOUS EDITION IS OBSOLETE