INCH-POUND

MIL-C-28876C
18 NOVEMBER 1988
SUPERSEDING
MIL-C-28876B
3 February 1987

MILITARY SPECIFICATION

CONNECTORS, FIBER OPTIC, CIRCULAR, PLUG AND RECEPTACLE STYLE, MULTIPLE REMOVABLE TERMINI, GENERAL SPECIFICATION FOR

This specification is approved for use by all Departments and Agencies of the Department of Defense.

1. SCOPE

1.1 Scope. This specification covers circular, plug and receptacle style, multiple removable termini, fiber optic connectors that are for Department of Defense applications and that are compatible with multiple transmission element cables. Fiber optic connectors specified herein cover a family of general purpose, interconnection hardware providing a variety of compatible optical coupling arrangements.

1.2 Classification. Plug and receptacle styles, as specified (see 3.1), shall permit straight, wall mounted, jamnut mounted, right angle and other connector configurations as required for cable system applications. Hardware associated with the connector is also specified (see 3.1), including connector backshells and protective covers.

2. APPLICABLE DOCUMENTS

2.1 Government documents.

2.1.1 Specifications, standards, and handbooks. The following specifications, standards, and handbooks form a part of this document to the extent specified herein. Unless otherwise specified, the issues of these documents are those listed in the issue of the issue of the Department of Defense Index of Specifications and Standards and supplement thereto, cited in the solicitation.

SPECIFICATIONS

FEDERAL

QQ-P-35	-	Passivation Treatments For Corrosion Resisting Steel.
QQ-A-225	-	Aluminum and Aluminum Alloy Bar, Rod, Wire, Or Special Shapes, Rolled, Drawn, Or Cold Finished, General Specification For.
QQ-A-591	-	Aluminum Alloy Die Castings.
QQ-S-763	-	Steel Bar Wire, Shape And Forging, Corrosion Resisting.
QQ-S-766	-	Steel Plate, Sheet, And Strip-Corrosion Resisting.

Beneficial comments (recommendations, additions, deletions) and any pertinent data which may be of use in improving this document should be addressed to: Commander, Defense Electronics Supply Center, ATTN: DESC-ES, 1507 Wilmington Pike, Dayton OH 45444-5276, by using the self-addressed Standardization Document Improvement Proposal (DD Form 1426) appearing at the end of this document or by letter.

AMSC N/A FSC 6060

DISTRIBUTION STATEMENT A. Approved for public release; distribution is unlimited.

Source: https://assist.dla.mil -- Downloaded: 2016-12-30T10:25Z
Check the source to verify that this is the current version before use.

MILITARY

MIL-S-901	-	Shock Tests, HI (High-Impact) Shipboard Machinery, Equipment And Systems, Requirements For Navy.
MIL-H-5606	-	Hydraulic Fluid, Petroleum Base, Aircraft, Missile, and Ordnance.
MIL-L-7808	-	Lubricating Oil, Aircraft Turbine Engine, Synthetic Base, NATO Code Number O-148.
MIL-R-25988	-	Rubber, Fluorosilicone Elastomer, Oil-and-Fuel-Resistant, Sheets, Strips, Molded Parts, And Extruded Shapes.
MIL-T-29504	-	Termini, Fiber Optic Connector, General Specification For.
DOD-F-49291	-	Fiber, Optical, (Metric), General Specification For.
MIL-C-55330	-	Connector, Electrical and Fiber Optic, Packaging of.
DOD-C-85045	-	Cable, Fiber Optics, (Metric), General Specification For.

(See supplement 1 for list of associated specifications.)

STANDARDS

MILITARY

MIL-STD-105	-	Sampling Procedures and Tables For Inspection By Attributes.
MIL-STD-202	-	Test Methods for Electronic And Electrical Component Parts.
MIL-STD-454	-	Standard General Requirements For Electronic Equipment.
MIL-STD-889	-	Dissimilar Metals.
MIL-STD-1285	-	Marking of Electrical And Electronic Parts.
MIL-STD-1344	-	Test Methods For Electrical Connectors.
MIL-STD-1373	-	Screw Thread, Modified, 60 Degree Stub, Double.
DOD-STD-1678	-	Fiber Optics Test Methods And Instrumentation.
MIL-STD-2163	-	Insert Arrangements For MIL-C-28876(NAVY) Environment Resisting Fiber Optic Connectors.
MIL-STD-45662	-	Calibration Systems Requirements.

(Unless otherwise indicated, copies of federal and military specifications, standards, and handbooks are available from the Naval Publications and Forms Center, (ATTN: NPODS), 5801 Tabor Avenue, Philadelphia, PA 19120-5099).)

2.2 Non-Government publications. The following documents form a part of this document to the extent specified herein. Unless otherwise specified, the issues of the documents which are DOD adopted are those listed in the issue of the DODISS cited in the solicitation. Unless otherwise specified, the issues of the documents not listed in the DODISS are the issues of the documents cited in the solicitation (see 6.2).

ELECTRONIC INDUSTRIES ASSOCIATION (EIA)

†EIA-RS-359	-	EIA Standard Colors for Color Identification and Coding.
†EIA-RS-455	-	Standard Test Procedures for Fiber Optic Fibers, Cables, Transducers, Connecting and Terminating Devices.
†EIA-RS-455-1	-	Standard Test Procedures for Fiber Optic Fibers, Cables, Transducers, Connecting and Terminating Devices (FOTP-3).
†EIA-RS-455-22	-	Ambient Light Susceptability.
†EIA-RS-455-40	-	Fluid Immersion Test for Fiber Optic Cable.
†EIA-455-2	-	Impact Test Measurements for Fiber Optic Devices.
†EIA-455-4	-	Fiber Optic Connector/Component Temperature Life.
†EIA-455-13	-	Visual and Mechanical Inspection of Fibers, Cables, Connectors, and/or Other Fiber Optic Devices.
†EIA-455-21	-	Mating Durability for Fiber Optic Interconnecting Devices.

Source: https://assist.dla.mil -- Downloaded: 2016-12-30T10:25Z
Check the source to verify that this is the current version before use.

+EIA-455-26 - Crush Resistance of Fiber Optic Interconnecting Devices.
+EIA-455-32 - Fiber Optic Circuit Discontinuities.
+EIA-455-34 - Interconnection Device Insertion Loss Test.
+EIA-455-36 - Twist Test for Fiber Optic Connecting Devices.

+Denotes adopted EIA documents.

(Application for copies should be addressed to the Electronic Industries Association, Engineering Department, 2001 Eye Street, N.W., Washington, DC 20006.)

(Non-Government standards and other publications are normally available from the organizations that prepare or distribute the documents. These documents also may be available in or through libraries or other informational services.)

2.3 Order of precedence. In the event of a conflict between the text of this document and the references cited herein (except for related associated detail specifications, specification sheets, or MS standards), the text of this document takes precedence. Nothing in this document, however, shall supersede applicable laws and regulations unless a specific exemption has been obtained.

3. REQUIREMENTS

3.1 Specification sheets. The individual connector requirements shall be as specified herein and in accordance with the applicable specification sheets. In the event of any conflict between the requirements of this specification and the specification sheet, the latter shall govern.

3.2 Qualification. Fiber optic connectors and accessories furnished under this specification shall be products which are qualified for listing on the applicable qualified products list at the time set for opening of bids (see 4.4 and 6.3).

3.3 Materials. The connectors, backshells, covers, or other protective accessory hardware shall be constructed of:

a. Aluminum alloy per QQ-A-225, or QQ-A-591.

b. Stainless steel per QQ-S-763, class 316.

c. Stainless steel per QQ-S-763, class 302 through class 304.

d. Stainless steel per QQ-S-766, class 302.

e. Fluorosilicone per MIL-R-25988, type 1, class 1, grade 60.

f. Fluorosilicone per MIL-R-25988, type 1, class 1, grade 70.

3.3.1 Finish. The resultant finish on all connectors, backshells, covers, or other protective accessory hardware shall be as follows:

a. Aluminum components: Cadmium plate, olive drab over electroless nickel for external parts. Gray anodize for internal parts.

b. Stainless steel components, passivate per QQ-P-35.

3.3.2 General. All materials used shall be nonmagnetic and nonnutrient to fungus (see requirement 4 of MIL-STD-454). Materials may be dielectric or conductive as applicable. Materials shall in no manner interfere with or degrade the fiber optical termination process, contact cleaning operation or optical junction transmission.

Source: https://assist.dla.mil -- Downloaded: 2016-12-30T10:25Z
Check the source to verify that this is the current version before use.

3.3.3 Solvents, adhesives, and cleaning agents. No incompatibility shall exist between the materials employed in the fiber to terminus securing or polishing processes, such that degradation of these materials shall result from in-service use or when tested in accordance with the requirements of the temperature life test of 3.11.10.

3.3.3.1 Recommended solvents, adhesives, and cleaning agents. The connector manufacturer shall pack with each connector, a list of the solvents, adhesives, and cleaning agents, as applicable, recommended for use with the connector.

3.3.3.2 Recommended cleaning procedure. The connector manufacturer shall pack the recommended terminus cleaning procedure with each connector.

3.3.4 Toxic and hazardous products and formulations. Materials used in the connectors, backshells, or accessories shall not give off toxic or explosive fumes when exposed to flame. Materials used shall have no adverse effect on the health of personnel when used for its intended purpose.

3.3.5 Steel parts. Unless otherwise specified (see 3.1), all exposed corrosion- resistant steel parts of the connector assembly shall have a passivated finish which permits the attainment of a surface finish condition compatible with external coatings of platings of the type and color specified herein.

3.4 Design and construction. Connectors, backshells, and protective accessories shall conform to figures 3 through 10, and as specified (see 3.1).

3.4.1 Dissimilar metals. Intimate contact between dissimilar metals shall be avoided, where possible, in connectors designed to this specification. Should contacting dissimilar metals be employed in a connector, suitable protection against electrolytic corrosion shall be provided as specified in MIL-STD-889.

3.4.2 Seals. Seals shall provide environmental isolation for the optical contact junctions and connector interior parts. Grommets, O-rings, interfacial seals, boots, gaskets, or other sealing devices, as needed by the connector design, shall accomplish
their intended purpose and meet all test requirements as specified herein.

3.4.2.1 Optical junction sealing. Optical junctions shall be sealed against moisture and contamination as specified herein.

3.4.2.2 Cable sealing. Connectors shall seal the terminating cables to meet the environmental requirements specified herein.

3.4.3 Interchangeability and intermateability. Connector material and hardware shall be as specified (see 3.1), to insure interchangeability and intermateability.

3.4.3.1 Interchangeability. All connectors, backshells, accessories, and replaceable parts having the same military part number shall be physically and functionally interchangeable without need for modification of such items or of the mating equipment.

3.4.3.2 Intermateability. All connectors having the same termini, insert arrangement, and shell size shall be intermateable with their counterpart connectors.

3.5 Connectors (receptacles and plugs).

3.5.1 Shells. The connector shells shall retain the connector insert.

3.5.1.1 Receptacles. Receptacles shall be of the wall mount, jamnut, or cable types as specified (see 3.1).

Source: https://assist.dla.mil -- Downloaded: 2016-12-30T10:25Z
Check the source to verify that this is the current version before use.

3.5.1.2 Engagement of connectors. Counterpart connectors of any arrangement and accessories shall be capable of being fully engaged and disengaged without the use of tools.

3.5.1.3 Coupling mechanism. Coupling rings of the connectors shall be knurled, and designed so that plug and receptacle optical termini shall approach or recede from each other as the coupling mechanism is respectively tightened by clockwise rotation or loosened in the counterclockwise direction as viewed from rear of plug connector. The coupling mechanism shall be captive on the plug to mate with the receptacle shell. Coupling ring and coupling screw threads shall be in accordance with MIL-STD-1373 as shown on figures 6 and 7, and as specified (see 3.1). If the coupling threads must be lubricated to meet the requirements contained herein, the lubricant shall be applied only during manufacture. The lubricant selected shall not be reapplied nor migrate into the optical junction region during use.

3.5.1.4 Shell and backshell polarization (keying). The polarization of the mating plug and receptacle shall be accomplished by integral keys on plug and receptacle shells. Keys shall be designed to prevent physical contact of the mating optical termini or of the termini with the insert surface of the counterpart connector until the keyways are properly aligned for engagement and the coupling mechanisms are engaged. Backshell splines, keys, and keyways shall be polarized and mated prior to coupling.

3.5.2 Termini. All termini requirements shall be in accordance with MIL-T-29504 (see 3.1).

3.5.3 Inserts. Inserts shall be keyed and secured to prevent rotation within the connector shell.

3.5.3.1 Number of termini, arrangement, and spacing. The insert pattern, that is, the number of termini, their arrangement and spacing shall be as specified in MIL-STD-2163. Every terminus position shall accept either optical or dummy termini. Termini spacing shall permit adequate terminus marking identification and easy terminus insertion and removal.

3.5.3.2 Terminus insertion and removal methods. Optical terminus insertion shall be accomplished by inserting the terminus and the terminus insertion tool into the rear of the connector and by locking the terminus in place. Optical terminus removal shall be accomplished by inserting the terminus removal tool into the front of the connector and by forcing the terminus out the rear of the connector. The individual termini shall be positively retained in the connector when installed with the terminus insertion tool and shall be capable of being removed without terminus or insert damage when using the terminus removal tool. Requirements for these tools shall be as specified (see 3.1).

3.6 Backshell accessories. Backshells shall conform to the requirements as specified (see 3.1). The backshells shall be provided with or without cable strain relief. The backshells shall be free of any sharp edges or other configurations that could cause damage to optical fibers extending through them.

3.7 Protective caps. All optical connectors (plugs and receptacles) shall be provided with a plastic throw-away protective cap or cover. The cover shall be free of mold release or any other lubricants.

3.8 Tools. Tools used to terminate connectors onto cables shall be as specified (see 3.1). The connector manufacturer shall provide the tools when specified in the acquisition documents (see 6.2).

Source: https://assist.dla.mil -- Downloaded: 2016-12-30T10:25Z
Check the source to verify that this is the current version before use.

3.9 Visual and mechanical inspection of fibers, cables, connectors, or other fiber optic devices.

3.9.1 Size. When examined in accordance with 4.6.1, the dimensions and dimensional tolerances for these connectors, backshells, and accessories shall be as specified (see 3.1).

3.9.2 Mass. When tested in accordance with 4.6.2, the mass of the connectors, backshells, and accessories shall be as specified (see 3.1).

3.9.3 Identification marking. Marking characters shall be a minumum of .040 inch in height. The connector shall also be marked with a yellow band in accordance with EIA RS-359, and the phrase "FIBER OPTICS" as specified (see 3.1). When tested in accordance with 4.6.3, the connectors, backshells, and accessories shall be marked as specified in 3.9.3.1, 3.9.3.2, or as specified (see 3.1). All marking characters in any face of the connectors, backshells, or accessories shall be identifiable.

3.9.3.1 Connectors, backshells, and accessories. The connectors, backshells, and accessory parts shall be identified by a legible and permanent marking applied in accordance with MIL-STD-1285.

3.9.3.2 Inserts. Marking shall correspond between mating inserts and shall be as specified in MIL-STD-2163. Raised or depressed characters shall not be used on mating faces. Terminus locations shall be designated by identifiable characters on the front and rear faces of the insert or the insert assembly. Character position and arrangement shall assure appropriate terminus cavity identification.

3.9.4 Workmanship. All details of workmanship shall be in accordance with the high grade fiber optic connector manufacturing practice when examined in accordance with 4.6.4. Connectors and accessories shall be dimensionally uniform and free of manufacturing flaws that would degrade performance, inhibit proper connection to interfacing elements, and otherwise yield an inferior product. The following shall be a minimal level of visual examination to be performed and is not intended to restrict other pertinent workmanship examinations:

a. Loose contacts, inserts, or other connector parts which adversely effect the environmental sealing, permit cable sealant penetration or degrade optical contact alignment shall not be permitted.

b. Peeling or chipping of plating or finish, galling of mating parts indicating excessive wear, nicks, burrs, or other substandard connector surface blemishes shall not be permitted.

3.10 Optical performance. The optical performance requirements of 3.10.1 through 3.10.5 shall be used to monitor effects of the inspection requirements specified in 3.9 as required by 4.4.2, 4.5.1.2, and 4.5.2.

3.10.1 Interconnection device insertion loss test. When measured in accordance with 4.7.1, the maximum per channel insertion loss under all conditions shall be 1.5 decibels (dB) for core fibers of 100 micrometers (μm) and 2.0 dB for 50-μm core fibers.

3.10.2 Fiber optic circuit discontinuities. When measured in accordance with 4.7.2, no discontinuity shall occur. A discontinuity is considered to be a reduction of strength of 2 dB (37 percent) or more for a duration of 1 microsecond (μs) or longer.

3.10.3 Analog modulation. When tested in accordance with 4.7.3, the peak-to-peak analog modulation, bandpass limited to between 4 hertz (Hz) and 40 kilohertz (kHz), shall be not more than 1 percent of the steady-state signal level.

Source: https://assist.dla.mil -- Downloaded: 2016-12-30T10:25Z
Check the source to verify that this is the current version before use.

3.10.4 Crosstalk. When devices with 3 or more channels are tested in accordance with 4.7.4, the signal power levels, or sum of levels of the passive channel or channels, shall be below the signal level of the active channel by at least 60 dB.

3.10.5 Ambient light susceptibility. When tested in accordance with 4.7.5, the optical power of the light from the optical ports (after accounting for cable and optical junction losses between the device and the detector) shall be less than -70 dBm.

3.11 Physical requirements.

3.11.1 Screw threads. When tested in accordance with 4.8.1, slight out-of-roundness beyond the tolerances specified is acceptable if the threads can be checked without forcing the thread gauges. Screw threads may be relieved provided the relief does not interfere with proper performance of the screw threads.

3.11.2 Terminus insertion and removal forces. Connectors shall be tested in accordance with 4.8.2. The terminus insertion force and the force required to remove unlocked termini shall not exceed 22.0 pounds.

3.11.3 Terminus retention force. When tested in accordance with 4.8.3 and subjected to axial loads of 22.0 pounds termini shall be retained in their inserts and axial displacements of the termini shall not exceed 0.015 inch (0.38 mm).

3.11.4 Insert retention axial strength. When tested in accordance with 4.8.4, connector inserts shall withstand an applied minimum pressure of 100 pounds per square inch in both the forward direction and the backward direction for a minimum period of 1 minute without cracking, breaking, or being dislocated from their normal positions in the connector shell. No axial displacement detrimental to performance shall be observed between the inserts and their shell body during or after the test exposure.

3.11.5 Insert retention radial strength. When tested in accordance with 4.8.5, connector inserts shall withstand the clockwise and counterclockwise radial torque specified in table I for a minimum period of one minute. No rotational displacement detrimental to performance shall be observed between the inserts and their shell body during or after the test exposure.

TABLE I. Insert retention radial strength.

Connector shell size	Maximum radial torque (inch pounds)
11	15
13	20
15	25

3.11.6 Cable retention test procedure for fiber optic cable interconnecting devices. When tested in accordance with 4.8.6, the minimum cable to connector pullout strength shall be 162 pounds. There shall be no evidence of cable jacket damage, cable clamp failure, cable to connector seal damage, distortion or bending of metallic connector parts, or cable disengagement from the clamp.

Source: https://assist.dla.mil -- Downloaded: 2016-12-30T10:25Z
Check the source to verify that this is the current version before use.

3.11.7 External bending moment. When tested in accordance with 4.8.7, connectors shall exhibit no visible evidence of damage that may degrade their ability to perform as specified (see 3.1).

3.11.8 Coupling torques. When tested in accordance with 4.8.8, the maximum coupling ring and coupling screw engagement and disengagement torques shall be as specified in table II.

TABLE II. Coupling torques.

Connector shell size	Coupling torque (inch-pounds)
11	13
13	15
15	17

3.11.9 Fiber optic connector/component temperature life. When tested in accordance with 4.8.9, connectors subjected to these specified accelerated aging exposures shall not exhibit visual evidence of dimensional change, opening of seals, cracking or crazing of components or finishes, identification marking impairment, fusion or seizure of mating parts, leakage of waterproofing compounds or other effects detrimental to connector operation. No evidence of adhesive degradation shall be present.

3.11.10 Maintenance aging. Connectors with removable termini shall be tested in accordance with 4.8.10. Connectors shall show no visible evidence of wear or deformation which may degrade their ability to perform as specified. The terminus insertion and removal forces requirement of 22.0 pounds (see 3.11.2) shall be met.

3.11.11 Twist test for fiber optic connecting devices. When tested in accordance with 4.8.11, connector seals shall not be rendered inoperable nor shall any other connector damage occur.

3.11.12 Cable seal flexing. When tested in accordance with 4.8.12, connector strain relief mechanisms shall prevent loss of environmental sealing or other damage which may impair the connector operation.

3.11.13 Mating durability for fiber optic connecting. When tested in accordance with 4.8.13, mating connectors shall show no evidence of mechanical defects detrimental to connector operation.

3.11.14 Backshell and accessory attachment. When tested in accordance with 4.8.14, no evidence of excessive thread binding, seal pinching, or any contamination buildup shall be observed.

3.12 Environmental requirements.

3.12.1 Fluid immersion test for fiber optic cable. When tested in accordance with 4.9.1, visual examination of the test connector shall reveal no swelling or softening of material, no loss of sealing capability or identification marking and no discoloration or other effects detrimental to the intended use of these connectors.

Source: https://assist.dla.mil -- Downloaded: 2016-12-30T10:25Z
Check the source to verify that this is the current version before use.

3.12.2 Temperature cycling of fiber optic connectors (thermal shock). When tested in accordance with 4.9.2, a posttest visual examination of the test connectors shall reveal no evidence of connector part dimensional change, no leakage of waterproofing compounds or other apparent loss of sealing capability, no surface or identification marking impairment, no coupling-thread binding or other evidence of mating or unmating incapability, and no other damage detrimental to the operation of the connector.

3.12.3 Mechanical shock. When tested in accordance with 4.9.3, connectors shall not be damaged and there shall be no loosening of parts.

3.12.4 Vibration test procedures for fiber optic connecting devices. When tested in accordance with 4.9.4, connectors shall not exhibit visual evidence of loosening of parts, relative motion between parts or other damage which can produce physical distortion or wear and may result in fatigue of the mechanical parts or failure of the connector operation.

3.12.5 Ozone exposure. When tested in accordance with 4.9.5, seals shall show no evidence of excessive swelling or embrittlement which may degrade environmental isolation.

3.12.6 Water pressure. When tested in accordance with 4.9.6, visual inspection of the test connector shall reveal no penetration of indicator dye into the sealed region of the mated connector.

3.12.7 Impact test measurements for fiber optic devices. When tested in accordance with 4.9.7, connectors shall not be visibly damaged or otherwise rendered unfit for operational use.

3.12.8 Crush resistance. When tested in accordance with 4.9.8, connectors shall show no evidence of inability to mate or unmate, broken parts, backshells or accessories, loss of optical continuity, or damage to shells.

3.12.9 Humidity test procedure for fiber optic connecting devices. When tested in accordance with 4.9.9, connector parts shall not swell or otherwise degrade such that connector performance is impaired.

3.12.10 Salt spray (corrosion). When tested in accordance with 4.9.10, no visible evidence of salt penetration into the connector sealed area shall be observed. No corrosive effects shall be seen on the external connector parts which would be detrimental to the operation of the connector.

3.12.11 Sand and dust. When tested in accordance with 4.9.11, the connectors shall show no evidence of physical damage which will adversely affect the operation of the connector and shall have insertion losses and coupling torques within the requirements of 3.10.1 and 3.11.8.

3.12.12 Terminus cleaning. After cleaning the terminus in accordance with 4.9.12, the marking requirements of 3.9.3 and the optical insertion loss of 3.10.1 shall be met.

3.12.13 Flammability. When tested in accordance with 4.9.13, burning and afterglow extinguishing time shall be 3 seconds. Dripping which will cause flammable material to ignite and violent burning or an explosive type fire shall not occur.

Source: https://assist.dla.mil -- Downloaded: 2016-12-30T10:25Z
Check the source to verify that this is the current version before use.

4. QUALITY ASSURANCE PROVISIONS

4.1 Responsibility for inspection. Unless otherwise specified in the contract or purchase order, the contractor is responsible for the performance of all inspection requirements as specified herein. Except as otherwise specified in the contract or purchase order, the contractor may use his own or any other facilities suitable for the performance of the inspection requirements specified herein, unless disapproved by the Government. The Government reserves the right to perform any of the inspections set forth in the specification where such inspections are deemed necessary to assure supplies and services conform to prescribed requirements.

4.1.1 Responsibility for compliance. All items must meet all requirements of sections 3 and 5. The inspections set forth in this specification shall become a part of the contractor's overall inspection system or quality program. The absence of any inspection requirements in the specification shall not relieve the contractor of the responsibility of assuring that all products or supplies submitted to the Government for acceptance comply with all requirements of the contract. Sampling in quality conformance does not authorize submission of known defective material, either indicated or actual, nor does it commit the Government to acceptance of defective material.

4.1.2 Test equipment and inspection facilities. Provisions for test and measuring equipment and inspection facilities of sufficient accuracy, quality and quantity to permit performance of the required inspections shall be the responsibility of the contractor. The establishment and maintenance of a calibration system to control the accuracy of the measuring and test equipment shall be in accordance with MIL-STD-45662 and as specified herein.

4.1.3 Assembly plants. Assembly plants must be listed on, or approved for listing on, the applicable qualified products list. The qualified connector manufacturer shall certify that the assembly plant is approved for the distribution of the manufacturer's parts. The assembly plant shall use only piece parts supplied by the qualified connector manufacturer. No testing other than visual examination is required of certified piece parts obtained from the qualified connector manufacturer, except when there is cause for rejection. All assemblies produced at the assembly plant shall be subjected to examination of the product to assure that the assembly process conforms with that established at the qualified manufacturing plant. Quality control requirements, including Government inspection surveillance, shall be the same as required for the qualified connector manufacturer.

4.2 Inspections.

4.2.1 Classification of inspections. The inspections specified herein are classified as follows:

a. Materials inspection (see 4.3).

b. Qualification inspection (see 4.4).

c. Quality conformance inspection (see 4.5).

4.2.2 Inspection conditions. Unless otherwise specified, all inspections shall be performed in accordance with the test conditions specified in DOD-STD-1678.

4.3 Materials inspection. Materials inspection shall consist of certification supported by verifying data that materials used in fabricating the delivered fiber optic connectors are in accordance with the requirements of 3.3 and as specified (see 3.1).

Source: https://assist.dla.mil -- Downloaded: 2016-12-30T10:25Z
Check the source to verify that this is the current version before use.

4.4 Qualification inspection. Qualification inspection shall be performed at a laboratory acceptable to the Government (see 6.3) on sample units produced with equipment and procedures normally used in production. This inspection shall consist of performing the inspections and optical tests specified in table III, in the sequence shown therein, on the qualification test samples specified in 4.4.1.

4.4.1 Test samples. Fiber optic connector, backshell, and accessory samples complying with the specified requirements (see 3.1) shall be submitted for qualification. The manufacturer shall provide a counterpart connector for each connector subjected to qualifying tests requiring mating assemblies. The counterpart connectors provided for this purpose shall be new, previously qualified connectors or new connectors submitted for qualification testing. Manufacturers not producing mating connectors shall submit data substantiating that tests were performed with qualified counterpart connectors. For those tests specifying the use of mated connectors, optical and mechanical test assessments shall be made using the assigned counterpart connector for those test measurements as required.

4.4.1.1 Sample size. Six mating pairs, individual connectors shall be submitted for qualification testing. These connectors shall consist of MIL-C-28876/2 wall-mounted receptacles with straight strain reliefs and MIL-C-28876/7 plugs with straight strain reliefs as specified (see 3.1).

4.4.1.2 Sample preparation. Unless otherwise specified, connectors shall be fully assembled into cable-connector assemblies using the types of cable specified in the applicable connector specification sheet (see 3.1). Connector terminals shall be optically finished with termini properly seated within their inserts. For mated connectors, full sealing capability shall be provided as specified. Connectors shall be provided with backshell, strain relief cable clamp, and attached to a 15-meter length of the specified cable type.

4.4.2 Inspection routine. Connector, backshell, and accessory samples shall be tested in accordance with the sequence of table III. Optical tests shall be made as specified in table III. The connector group samples may be tested simultaneously.

4.4.3 Qualification rejection. Qualification approval will not be granted if any of the connectors, backshells, or accessories being tested according to table III fail to meet the requirements of 3.3, 3.4, 3.9, 3.10, 3.11, and 3.12.

4.4.4 Retention of qualification. To retain qualification, the contractor shall forward a report at 18-month intervals to the qualifying activity. The qualifying activity shall establish the initial reporting date. The report shall consist of:

a. A summary of the results of the tests performed for inspection of product for delivery (group A), indicating as a minimum the number of lots that have passed, the number that have failed, and the group which they failed. The results of tests of all reworked lots shall be identified and accounted for.

b. A summary of the results of tests performed for periodic inspection (group B), including the number and mode of failures. The summary shall include results of all periodic inspection tests performed and completed during the 18-month period. If the summary of the test results indicates nonconformance with specification requirements, and corrective action acceptable to the qualifying activity has not been taken, action may be taken to remove the failing product from the qualified products list.

Source: https://assist.dla.mil -- Downloaded: 2016-12-30T10:25Z
Check the source to verify that this is the current version before use.

TABLE III. Qualification inspection.

MIL-C-28876C

Inspection tests	Part applicability			Optical tests					Requirement paragraph	Test method paragraph
	Connector	Backshell	Accessories	Insertion loss (3.10.1)	Fiber optic circuit discontinuities (3.10.2)	Analog modulation (3.10.3)	Crosstalk (3.10.4)	Ambient light susceptibility (3.10.5)		
Group I (all sample units)										
Physical conformance										
Size	x	x	x						3.9.1	4.6.1
Mass	x	x	x						3.9.2	4.6.2
Identification marking	x	x	x						3.9.3	4.6.3
Workmanship	x	x	x						3.9.4	4.6.4
Screw threads	x	x	x						3.11.1	4.8.1
Optical conformance										
Interconnection device insertion loss test	x			x 1/					3.10.1	4.7.1
Crosstalk	x						x		3.10.4	4.7.4
Ambient light susceptibility	x							x	3.10.5	4.7.5
Group II (2 sample units) 2/										
Identification marking	x	x	x	a			a	a	3.9.3	4.6.3
Insertion and removal forces	x								3.11.2	4.8.2
Terminus retention force	x								3.11.3	4.8.3
Insert retention axial strength	x								3.11.4	4.8.4
Insert retention radial strength	x								3.11.5	4.8.5
Fiber optic connector/component temperature life	x	x	x	a					3.11.9	4.8.9
Maintenance aging	x								3.11.10	4.8.10
Fluid immersion test for fiber optic cable (one sample unit per fluid)	x	x	x						3.12.1	4.9.1
Humidity test procedure for fiber optic connecting devices	x	x	x						3.12.9	4.9.9
Group III (2 sample units)										
Identification marking	x	x	x	a			a	a	3.9.3	4.6.3
Cable pullout force	x	x		d					3.11.6	4.8.6
External bending moment	x	x							3.11.7	4.8.7
Coupling torques	x								3.11.8	4.8.8
Twist test for fiber optic connecting devices	x	x							3.11.11	4.8.8
Cable seal flexing	x	x							3.11.12	4.8.12
Mating durability for fiber optic connecting	x								3.11.13	4.8.13
Backshell and accessory attachment	x	x	x						3.11.14	4.8.14
Temperature cycling of fiber optic connectors (thermal shock)	x	x	x	d					3.12.2	4.9.2
Mechanical shock	x	x			d				3.12.3	4.9.3
Vibration test procedures for fiber optic connecting devices	x	x			d	d			3.12.4	4.9.4
Ozone exposure	x		x						3.12.5	4.9.5
Water pressure	x	x							3.12.6	4.9.6

See footnotes at end of table.

Source: https://assist.dla.mil -- Downloaded: 2016-12-30T10:25Z
Check the source to verify that this is the current version before use.

TABLE III. Qualification inspection - Continued.

Inspection tests	Part applicability			Optical tests					Requirement paragraph	Test method paragraph
	Connector	Backshell	Accessories	Insertion loss (3.10.1)	Fiber optic circuit discontinuties (3.10.2)	Analog modulation (3.10.3)	Crosstalk (3.10.4)	Ambient light susceptibility (3.10.5)		
Group IV (2 sample units)										
Identification marking	x	x	x	a			a	a	3.9.3	4.6.3
Coupling torques	x								3.11.8	4.8.8
Mating durability for fiber optic connecting	x								3.11.13	4.8.13
Backshell and accessory attachment	x	x	x						3.11.14	4.8.14
Impact test measurements for fiber optic devices	x	x	x	-					3.12.7	4.9.7
Crush resistance	x	x	x	a	d			a	3.12.8	4.9.8
Humidity test procedure for fiber optic connecting devices	x		x						3.12.9	4.9.9
Salt spray	x	x	x						3.12.10	4.9.10
Sand and dust	x			a					3.12.11	4.9.11
Terminus cleaning	x								3.12.12	4.9.12
Flammability	x	x	x						3.12.13	4.9.13

1/ d - Indicates performance test to be accomplished during inspection test.
a - Indicates performance test to be accomplished after inspection test.
x - Indicates that this test applies.

2/ Sample units - Number indicated means the number of connectors, backshells, or accessories that shall be tested, for example, "2 sample units" means 2 connectors and 2 accessories shall be tested when an "x" appears in the part applicability column under "Connector" and "Accessories".

Source: https://assist.dla.mil -- Downloaded: 2016-12-30T10:25Z
Check the source to verify that this is the current version before use.

Failure to submit the report within 30 days after the end of each 18-month period may result in loss of qualification for the product. In addition to the periodic submission of inspection data, the contractor shall immediately notify the qualifying activity at any time during the 18-month period that the inspection data indicates failure of the qualified product to meet the requirements of this specification.

In the event that no production occurred during the reporting period, a report shall be submitted certifying that the company still has the capabilities and facilities necessary to produce the item. If during two consecutive reporting periods, there has been no production, the manufacturer may be required, at the discretion of the qualifying activity, to submit the qualified product to testing in accordance with the qualification inspection requirements.

4.4.5 Qualification of additional connectors. Qualification of wall-mounted receptacles shall qualify cable-connecting and jamnut mounted receptacles. Each shell size shall be qualified separately. Qualification of one backshell shall qualify all backshells of the same shell size.

4.5 Quality conformance inspection. Quality conformance inspection shall consist of the inspections and optical tests specified for group A inspection (table IV), group B inspection (table V), and packaging inspection.

4.5.1 Inspection of product for delivery. Inspection of product for delivery shall consist of group A inspection.

4.5.1.1 Inspection lot. The inspection lot shall consist of the number of connectors offered for inspection at one time, and all of the same design as covered by one specification sheet.

4.5.1.1.1 Sample unit. A sample unit shall be selected at random from the inspection lot.

4.5.1.1.2 Sample size. The sample size shall consist of that number of sample units required by the inspection lot size, as determined by the sampling plans in MIL-STD-105.

4.5.1.2 Group A inspection. Group A inspection shall consist of the inspection tests specified in table IV. All connectors, backshells, and accessories of the inspection sample shall be subjected to the inspection tests listed.

4.5.1.2.1 Sample plan. Statistical sampling and inspection shall be in accordance with MIL-STD-105 for general inspection level II. The acceptable quality level (AQL) shall be 1 percent for major defects and 4 percent for minor defects. Major and minor defects shall be as defined in MIL-STD-105.

4.5.1.2.2 Rejected lots. If an inspection lot is rejected, the supplier may rework it to correct the defects, or screen out the defective units (if possible), and resubmit them for inspection. Resubmitted lots shall be inspected using tightened inspection in accordance with MIL-STD-105. Such lots shall be separate from new lots, and shall be clearly identified as reinspected lots.

4.5.1.2.3 Disposition of sample units. Sample units that have failed any of the group A inspection tests may be reworked to correct defects if possible and subjected to group A inspection again. Sample units that pass all tests of group A inspection may be delivered on the purchase order or contract or tested to group B inspection (see 4.5.2.1). Units that have not been corrected shall not be delivered on any order and shall not be used for group B inspection even though the inspection lot submitted is accepted.

Source: https://assist.dla.mil -- Downloaded: 2016-12-30T10:25Z
Check the source to verify that this is the current version before use.

TABLE IV. Group A inspection.

Inspection tests	Part applicability			Optical tests					Requirement paragraph	Test method paragraph
	Connector	Backshell	Accessories	Insertion loss (3.10.1)	Fiber optic circuit discontinuities (3.10.2)	Analog modulation (3.10.3)	Crosstalk (3.10.4)	Ambient light susceptibility (3.10.5)		
Size	x	x	x						3.9.1	4.6.1
Mass	x	x	x						3.9.2	4.6.2
Identification marking	x	x	x						3.9.3	4.6.3
Workmanship	x	x	x						3.9.4	4.6.4
Screw threads	x	x	x						3.11.1	4.8.1
Coupling torques	x								3.11.8	4.8.8
Backshell and accessory attachment	x	x	x						3.11.14	4.8.14

4.5.2 Periodic inspection. Periodic inspection shall consist of group B. Except where the results of these inspections show noncompliance with the applicable requirements (see 4.5.2.1.6), delivery of products which have passed group A inspection shall not be delayed pending the results of periodic inspection.

4.5.2.1 Group B inspection. Group B inspection shall consist of the tests specified in table V in the order shown. Group B inspection shall be performed on sample units of each style and selected from inspection lots which have passed group A inspection. Group B inspection samples shall be representative of production.

4.5.2.1.1 Sampling plan. Every 18 months, connector, backshell, and accessory sample units which have passed group A inspection shall be selected in sufficient quantity to provide three samples per applicable test group.

4.5.2.1.2 Sample unit preparation. Connectors shall be fully assembled into cable-connector assemblies using the types of cable specified in DOD-C-85045. Connector terminals shall be optically finished with termini properly seated within their inserts. For mated connectors, full sealing capability shall be provided as specified (see 3.1). Connectors shall be provided with backshell, strain relief cable clamp, and attached to a 15-meter length of the specified cable type, and shall be terminated in accordance with the manufacturer's instructions.

4.5.2.1.3 Specimen. A specimen shall be a sample unit prepared in accordance with 4.5.2.1.2.

4.5.2.1.4 Failures. If one or more specimen or sample units fail to pass group B inspection, the sample shall be considered to have failed.

4.5.2.1.5 Disposition of sample units. Sample units which have been subjected to group B inspection shall not be delivered on the contract or purchase order.

Source: https://assist.dla.mil -- Downloaded: 2016-12-30T10:25Z
Check the source to verify that this is the current version before use.

TABLE V. Group B inspection.

MIL-C-28876C

Inspection tests	Part applicability			Optical tests					Requirement paragraph	Test method paragraph
	Connector	Backshell	Accessories	Insertion loss (3.10.1)	Fiber optic circuit discontinuties (3.10.2)	Analog modulation (3.10.3)	Crosstalk (3.10.4)	Ambient light susceptibility (3.10.5)		
Group I (3 sample units) 1/										
Identification marking	x	x	x	a			a	a	3.9.3	4.6.3
Twist test for fiber optic connecting devices	x	x		d					3.11.11	4.8.11
Cable seal flexing	x	x		d					3.11.12	4.8.12
Mechanical shock	x	x			d 2/				3.12.3	4.9.3
Impact test measurements for fiber optic devices	x	x	x						3.12.7	4.9.7
Ozone exposure	x		x						3.12.5	4.9.5
Humidity test procedure for fiber optic connecting devices	x		x						3.12.9	4.9.9
Flammability	x	x	x						3.12.13	4.9.13
Group II (3 sample units)										
Identification marking	x	x	x	a			a	a	3.9.3	4.6.3
Terminus retention force	x								3.11.3	4.8.3
Insert retention axial strength	x								3.11.4	4.8.4
Insert retention radial strength	x								3.11.5	4.8.5
Cable retention test procedure for fiber optic cable interconnecting devices	x	x		d					3.11.6	4.8.6
Mating durability for fiber optic connecting	x								3.11.13	4.8.14
Water pressure	x		x						3.12.6	4.9.6
Salt spray (corrosion)	x	x	x						3.12.10	4.9.10
Sand and dust	x			a					3.12.11	4.9.11
Terminus cleaning	x								3.12.12	4.9.12

1/ Sample units - Number indicated means the number of connectors, backshells, or accessories that shall be tested, for example, "3 sample units" means 3 connectors and 3 accessories shall be tested when an "x" appears in the part applicability column under "Connector" and "Accessories".

2/ b - Indicates performance test to be accomplished before inspection test.
d - Indicates performance test to be accomplished during inspection test.
a - Indicates performance test to be accomplished after inspection test.

Source: https://assistdocs.com - Downloaded: 2016-12-30T10:26Z
Check the source to verify that this is the current version before use.

4.5.2.1.6 Noncompliance. If a sample fails to pass group B inspection, the manufacturer shall notify the qualifying activity and the cognizant inspection activity of such failure and take corrective action on the materials or processes, or both, as warranted, and on all units of product which can be corrected and which are manufactured under essentially the same conditions, with essentially the same materials and processes, and which are considered subject to the same failure. Acceptance and shipment of the product shall be discontinued until corrective action, acceptable to the Government, has been taken. After the corrective action has been taken, group B inspection shall be repeated on additional sample units (all tests and examinations, or the test which the original sample failed, at the option of the Government). Group A inspection may be reinstituted; however, final acceptance and shipment shall be withheld until the group B inspection has shown that the corrective action was successful. In the event of failure after reinspection, information concerning the failure and corrective action taken shall be furnished to the cognizant inspection activity and the qualifying activity.

4.5.3 Inspection of packaging. The sampling and inspection of the preservation, packing, and container marking shall be in accordance with the requirements of MIL-C-55330.

4.6 Visual and mechanical inspection of fibers, cables, connectors, or other fiber optic devices. The requirements for visual inspection shall be in accordance with EIA-455-13 (FOTP-13) (see 3.9).

4.6.1 Size. Each of the dimensions specified (see 3.1) for the connectors, backshells, and accessory parts shall be measured using calibrated measuring devices with the precision and accuracy appropriate for the tolerances specified (see 3.1 and 3.9.1). Dimensions shall be in accordance with the applicable specification sheets.

4.6.2 Mass. The connectors, backshells, and accessories shall be weighed using calibrated scales, having the range, precision, and accuracy appropriate for the tolerances specified (see 3.1 and 3.9.2).

4.6.3 Identification marking. Identification marking on connectors, backshells, and accessory parts shall be visually examined and measured for conformance with the requirements of 3.9.3.

4.6.4 Workmanship inspection. The connectors, backshells, and accessories shall be visually examined to verify that they meet the workmanship requirements of 3.9.4.

4.7 Optical conformance test methods. Cladding mode stripping devices shall be used when making optical measurements. Unless otherwise specified, the mode stripper shall be installed in the test circuit between the source and the connector. In connectors with one, two, or three optical channels, optical measurements shall be made in rapid succession on each channel. Unless otherwise specified herein, in connectors with four or more channels, optical measurements shall be made in rapid succession on three randomly selected channels.

4.7.1 Interconnection device insertion loss test. The connector shall be tested in accordance with method C of EIA-455-34 (FOTP-34) with 4.3.6 omitted. The light source shall be a continuous wave or modulated as appropriate. Fiber/cable lengths, L_1 and L_2, shall be measured and recorded in the test data sheet (see 3.10.1).

Source: https://assist.dla.mil -- Downloaded: 2016-12-30T10:25Z
Check the source to verify that this is the current version before use.

4.7.2 Fiber optic circuit discontinuities. The connector shall be tested in accordance with EIA-455-32 (FOTP-32). The optical termini of the connector shall be connected through short optical test cables to an appropriate optical signal source and detector. Unused termini shall be capped. The source shall produce a constant level static signal easily detected by the detector. The output of the detector shall be monitored for discontinuities while the connector is subjected to a physical test (see 3.10.2).

4.7.3 Analog modulation. The optical termini of the connector shall be connected through short optical cables to an optical signal source and detector. Unused termini shall be capped. The source shall produce a constant level static signal easily detected by the detector. The output of the detector shall be monitored for analog modulation while the device under test is subjected to a physical test. The detector and monitoring equipment shall possess sufficient sensitivity and frequency response to discern analog modulation at the acceptance level. The monitoring equipment shall include suitable signal recording capability (such as provided by a triggerable oscilloscope and an oscilloscope camera) (see 3.10.3).

4.7.4 Crosstalk. The termini of the connector shall be connected to short test cables or opaquely capped as appropriate. The input to one optical channel (the active channel) is connected via its test cable to an optical signal source, the signal of which may be either continuous or amplitude modulated as appropriate. The output ports of the other channels (passive channels) are connected to test cables. The other input ports shall be opaquely capped. The output signal power from both the active and passive channels shall be measured. When there is more than one passive channel, the output of all passive channels shall be summed. This test shall be repeated, making each remaining input port the active channel (see 3.10.4).

4.7.5 Ambient light susceptibility. The connector shall be tested in accordance with EIA-RS-455-22 (FOTP-22). The optical termini of the connector shall be either opaquely capped or connected to short optical test cables as appropriate. The light shall be broad spectrum with infrared, visible, and ultraviolet components and shall illuminate the connector with an irradiance (power density) of 112 ±5 milliwatts (see 3.10.5).

4.8 Physical inspections.

4.8.1 Screw threads. Screw threads shall be checked after protective coating by means of ring and plug gauges in accordance with MIL-STD-1373 (see 3.11.1).

4.8.2 Terminus insertion and removal forces. Unmated connnector samples shall be tested in accordance with method 2012 of MIL-STD-1344. Cable clamping shall be relaxed and the connector backshell removed for the performance of these tests (see 3.11.2).

4.8.3 Terminus retention force. Unmated connector samples shall be tested in accordance with method 2007 of MIL-STD-1344. Termini shall be subjected to axial compressive loads applied to the front face of the optical terminal tending to push the terminus to the rear of the shell body. Care must be exercised in the design of the terminus plunger mechanism to not physically touch the terminal optical region. Axial loads shall be applied up to the maximum load specified herein (see 3.11.3).

4.8.4 Insert retention axial strength. Unmated connector samples shall be tested in accordance with method 2010 of MIL-STD-1344. Termini positions within the insert shall be fully filled. Pressure shall be applied up to a minimum of 100 lbs psi and the axial displacement measured. The same pressure shall then be applied in the opposite direction and the displacement measured (see 3.11.4).

Source: https://assist.dla.mil -- Downloaded: 2016-12-30T10:25Z
Check the source to verify that this is the current version before use.

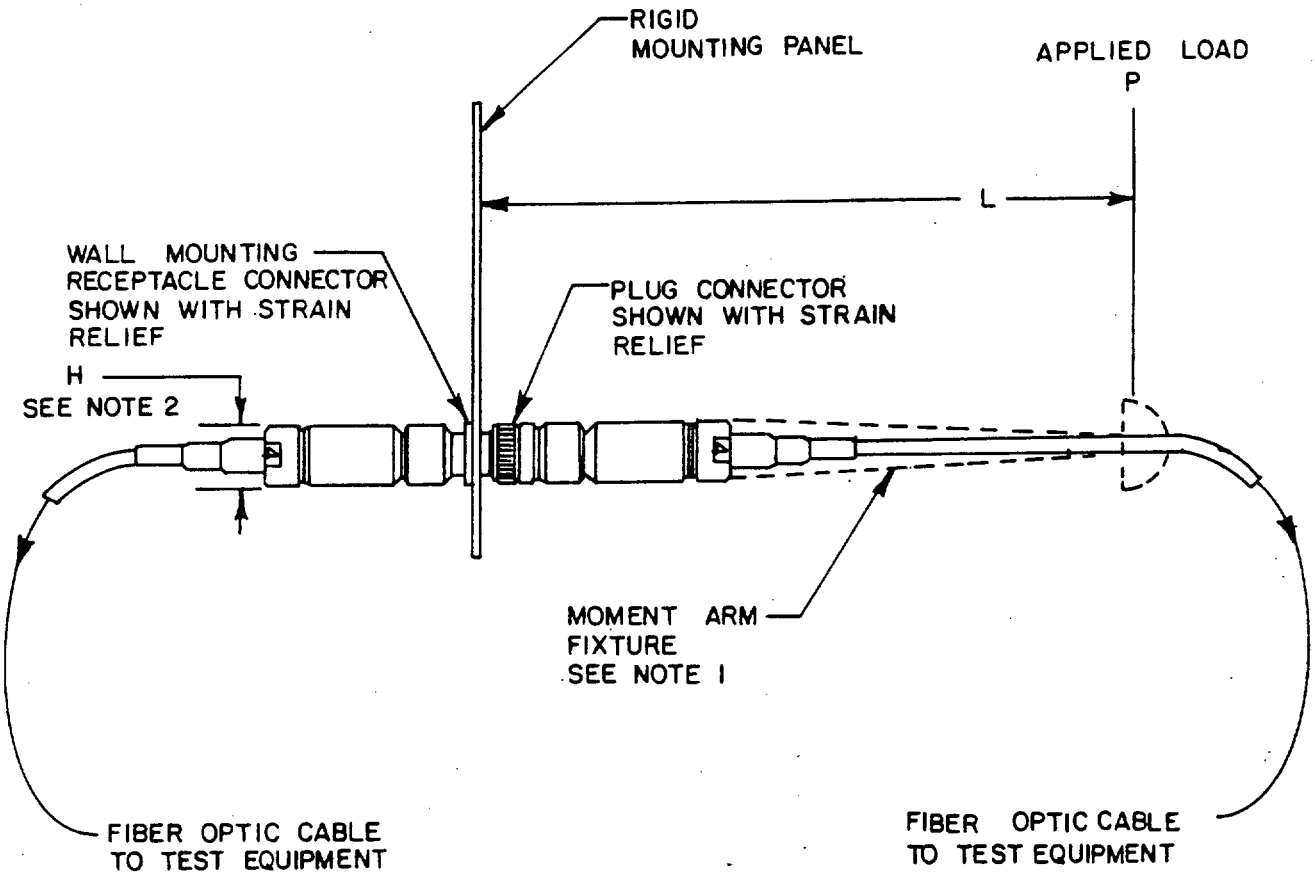

NOTES:
1. Moment arm fixture shall be of a convenient design.
2. Dimension "H" is the smallest exterior dimension of connector.

FIGURE 1. Test, external bending moment, fixture and setup connector, fiber optic.

Source: https://assist.dla.mil -- Downloaded: 2016-12-30T10:25Z
Check the source to verify that this is the current version before use.

4.8.5 Insert retention radial strength. Unmated connector samples shall be tested, where specified (see 3.1), for radial strength as described herein. Counterpart test devices for plugs and receptacles shall be supplied by the connector manufacturer which are capable of applying radial torque forces between the insert and its shell body. Outermost termini positions or other means may be used for application of these torques, however, no damage shall occur to the insert as a result of the test exposure. Torque loading shall be applied up to the maximum specified (see 3.1) in each rotational direction (see 3.11.5).

4.8.6 Cable retention test procedure for fiber optic cable interconnecting devices. Mated connector samples shall be tested in accordance with FOTP-6 of EIA-RS-455. The axial tensile load shall be applied up to the load specified (see 3.11.6) and shall be maintained for 10 minutes.

4.8.7 External bending moment. Cable-connector assemblies shall be tested in accordance with the following procedures. The cabled receptacle shall be mounted as in normal service to a rigid panel. Before mating the cabled plug to the receptacle, a bending moment test arm shall be secured to the rear of the plug shell. The fixture shall be of any convenient design for application of the load except it must not provide support for the connector shell in front of the engaged threads (see figure 1). After mating the plug and receptacle, the bending moment load of 300 inch pounds as measured from the panel shall be applied. The load (P) shall be applied across the smallest exterior dimension (H) of the connector (see figure 1). The load shall be applied at a rate of approximately 10 inch-pounds until the required load is applied. The maximum load shall be held for 1 minute (see 3.11.7).

4.8.8 Coupling torques. Mateable connectors or accessories shall be tested for radial engagement and disengagement torques in accordance with method 2013 of MIL-STD-1344 (see 3.11.8).

4.8.9 Fiber optic connector/component temperature life. Mated cable-connector assemblies shall be tested in accordance with test condition 3 and test time condition B of EIA-455-4 (FOTP-4). Measurements shall be made after testing (see 3.11.9).

4.8.10 Maintenance aging. Unmated connectors shall be tested in accordance with method 2002 of MIL-STD-1344. The termini selected for insertion and removal shall be the same termini to be used subsequently for optical testing. The force required to insert and remove each terminus in and from the connector shall be measured during the first and final maintenance aging cycle (see 3.11.10).

4.8.11 Twist test for fiber optic connecting devices. Mated cable-connector assemblies shall be tested in accordance with EIA-RS-455-36 (FOTP-36). The connector-held fixture shall be rotated ±360° at a rate of one cycle per 5 seconds for a total of 50 cycles. The cable assemblies shall be stretched with minimum tension of 11.0 pounds to their maximum lengths and clamped at a distance of about 100 times the cable diameter from the connector to the table top. Measurements shall be made before and after testing (see 3.11.11).

4.8.12 Cable seal flexing. Unmated cable-connector assemblies, or each type to be qualified shall be tested in accordance with method 2017 of MIL-STD-1344 (see 3.11.12).

4.8.13 Mating durability for fiber optic connecting. Connectors shall be tested in accordance with EIA-455-21 (FOTP-21). Five hundred complete (part separating) cycles (mate and unmate) shall be accomplished by hand at the rate of 1 cycle per 15 seconds (see 3.11.13).

4.8.14 Backshell and accessory attachment. Connector backshells and accessories shall be manually mated and unmated five times to their counterpart connectors (see 3.11.14).

Source: https://assist.dla.mil -- Downloaded: 2016-12-30T10:25Z
Check the source to verify that this is the current version before use.

4.9 Environmental tests.

4.9.1 Fluid immersion test for fiber optic cable (see 3.12.1). At least one mated and one unmated cable-connector assembly and accessories shall be tested in accordance with EIA-RS-455-40 (FOTP-40). Each assembly shall be tested in a different fluid. Fluids selected for testing shall be in accordance with table VI. After testing, the assemblies shall be examined for fluid penetration into the shell body and connector junction region (mated only) (see 3.12.1). During subsequent testing, connectors and accessories shall be fully mated with mating connectors that were immersed simultaneously in the same fluid. Measurements shall be made before and after testing.

TABLE VI. Fluids and test temperatures for cable jacket material immersion.

Fluid	Applicable specification	Test temperature (°C)
Fuel oil	MIL-F-16884	98 to 100
Turbine fuel, JP-4	MIL-T-5624	20 to 25
Turbine fuel, JP-5	MIL-T-5624	20 to 25
Isopropyl alcohol	TT-I-735	20 to 25
Hydraulic fluid	MIL-H-5606 MIL-L-17331	48 to 50
Lubricating oil	MIL-H-17672 MIL-L-24467	98 to 100
Coolant, Monsanto Coolanol or equivalent		20 to 25
Water and sea water		20 to 25

4.9.2 Temperature cycling of fiber optic connectors (thermal shock). Cable-connector assemblies (at least one mated and one unmated) shall be tested in accordance with test condition A of EIA-RS-455-1 (FOTP-3). The number of cycles shall correspond to test condition A-0. The mated and unmated cable-connector assemblies shall be examined for degradation of any sort after testing. Cleaning of the optical termini of the unmated connector assembly in accordance with 3.12.12 prior to optical testing shall be permissable.

4.9.3 Mechanical shock. Mated cable-connector assemblies shall be tested in accordance with MIL-S-901, grade A (see 3.12.3).

4.9.4 Vibration test procedures for fiber optic connecting devices. Mated cable-connector assemblies shall be tested in accordance with test condition III of method 2005 of MIL-STD-1344. Measurements shall be taken before, during and after testing (see 3.12.4).

4.9.5 Ozone exposure. Mated cable-connector assemblies shall be tested in accordance with method 1007 of MIL-STD-1344. After test exposure, the assemblies shall be examined for damage (see 3.12.5).

4.9.6 Water pressure. Mated cable-connector assemblies shall be tested for water pressure susceptability as follows. The assemblies shall be immersed in an aqueous dye penetrant solution to a depth of 72 inches for a period of 48 hours. The solution temperature shall be maintained between 10 and 35 degrees Celsius during the exposure period. The dye concentration shall be adequate to visibly indicate liquid exposure, the connector assemblies shall be externally cleaned, unmated, and examined for dye penetration into the connector (see 3.12.6).

Source: https://assist.dla.mil -- Downloaded: 2016-12-30T10:25Z
Check the source to verify that this is the current version before use.

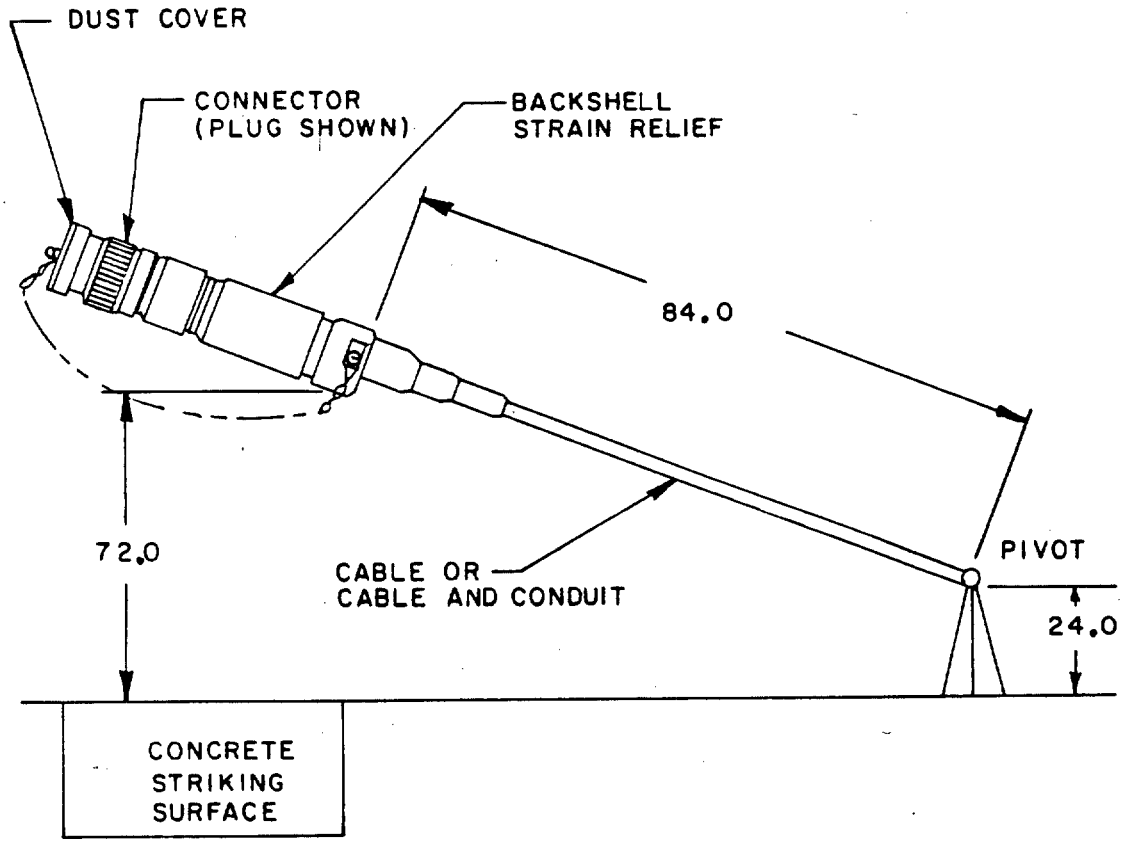

Inches	mm
24.0	610.
72.0	1829.
84.0	2134.

NOTES:
1. Dimensions are in inches.
2. Metric equivalents are given for general information only.

FIGURE 2. Test, impact, fixture and setup connector, fiber optic.

Source: https://assist.dla.mil -- Downloaded: 2016-12-30T10:25Z
Check the source to verify that this is the current version before use.

4.9.7 Impact test measurements for fiber optic devices (see 3.12.7). The unmated cables assembly with backshell and protective cover shall be tested in accordance with EIA-455-2 (FOTP-2 and figure 2). The cable assembly shall be repeatedly dropped observing the height sequence (highest drops first) and number of drops specified. The cable assembly shall be extended its full length from the test fixture. The plug or receptacle shall be dropped 8 times (light service class) and rotated after each fall so that the connector strikes the impact pad in eight different radial positions. The test assemblies shall be examined for damage, then mated. Terminus cleaning procedure of 3.12.12 may be employed after exposure and prior to mating.

4.9.8 Crush resistance. Cable-connector assemblies shall be tested in accordance with EIA-455-26 (FOTP-26) using 225 lbs as the test load (see 3.12.8).

4.9.9 Humidity test procedure for fiber optic connecting devices. Cable-connector assemblies (at least one mated and one unmated), shall be tested in accordance with test type II, of EIA-RS-455 (FOTP-5). The subcycle shall be included in the testing. Measurements shall be made before and after testing.

4.9.10 Salt spray (corrosion). Mated cable-connector assemblies shall be tested in accordance with test condition C of method 1001 of MIL-STD-1344. After test exposure, the assemblies shall be externally cleaned and examined under three-power magnification for salt penetration into the connector junction area and damage to external parts (see 3.12.10).

4.9.11 Sand and dust. Connectors mated and unmated, as applicable, shall be subjected to the dust (fine sand) test of MIL-STD-202, method 110 (see 3.12.11).

4.9.12 Terminus cleaning. The optical face of terminus shall be cleaned according to the instructions supplied by the connector manufacturer. (The terminus shall not be removed from its operational position within the connector to facilitate cleaning (see 3.12.12).

4.9.13 Flammability. Flammability of connectors and accessories (at least 1 mated and 1 unmated) shall be tested in accordance with method 1012 of MIL-STD-1344 with the flame applied for 60 seconds (see 3.12.13).

5. PACKAGING

5.1 Packaging requirements. The requirements for packaging shall be in accordance with MIL-C-55330.

6. NOTES

(This section contains information of a general or explanatory nature that may be helpful, but is not mandatory.)

6.1 Intended use. The fiber optic cables covered by this specification are intended for use in the following applications as specified (see 3.1) where their performance characteristics are required:

a. Fixed plant. Used in systems in fixed locations including indoor, outdoor aerial, direct burial, duct and undersea applications.

b. Tactical. Concerned with use in nonvehicular and mobile militarized systems.

c. Space. Which involves use in vehicles or systems deployed in outer space.

d. Avionics. Involving use in aircraft or missile systems.

Source: https://assist.dla.mil -- Downloaded: 2016-12-30T10:25Z
Check the source to verify that this is the current version before use.

e. Shipboard. Involving use in systems deployed in a mobile marine environment (on board or in tow).

f. Ground vehicle. Involving use in land vehicular systems.

g. Other specialized military specifications.

6.1.1 Special considerations for application categories. The following list is intended to serve as a reminder in generating a detail specification sheet. It is not all inclusive; however, it highlights some of the special considerations. Important to each application are specific requirements as follows:

a. Fixed plant:

(1) Inside (plenum): Flame and toxicity, breakout.

(2) Aerial: Wide temperature range, solar radiation.

(3) Duct: Narrow temperature range, water immersion.

(4) Buried: Rodent protection, crush resistance.

(5) Submarine: High pressure tensile strength for recovery.

b. Tactical: Ruggedness, water freeze, zero bend radius, nuclear.

c. Space: Outgassing in vacuum (change in composition), low-level radiation, extreme temperature range, nuclear - for military applications.

d. Avionics: High temperature, vibration and altitude.

e. Shipboard: Watertight or nonwatertight.

f. Vehicle, ground: Flammability and toxicity.

6.2 Acquisition requirements. Acquisition documents must specify the following:

a. Title, number, and date of the specification.

b. Issue of DODISS to be cited in the solicitation, and if required, the specific issue of individual documents referenced (see 2.1.1).

c. Part number.

d. Quantity of connectors required.

e. Inclusion of terminating tools, if desired (see 3.8).

6.3 Qualification. With respect to products requiring qualification, awards will be made only for products which are, at the time set for opening of bids, qualified for inclusion in qualified products list (QPL-28876) whether or not such products have actually been so listed by that date. The attention of the contractors is called to these requirements, and manufacturers are urged to arrange to have the products that they propose to offer to the Federal Government tested for qualification in order that they may be eligible to be awarded contracts or purchase orders for the products covered by this specification. The activity responsible for the qualified products list is Space and Naval Warfare Systems Command, DOD Standardization Program and Documents Division, Washington, DC 20363; however, information pertaining to qualification of products may be obtained from Defense Electronics Supply Center, DESC-EQ, Dayton, OH 45444.

Source: https://assist.dla.mil -- Downloaded: 2016-12-30T10:25Z
Check the source to verify that this is the current version before use.

6.3.1 Conformity to qualified sample. It is understood that connectors supplied under the contract shall be identical in every respect to the qualification sample tested and found satisfactory, except for changes previously approved by the Government. Any unapproved changes from the qualification sample shall constitute cause for rejection.

6.3.2 Provisions governing qualification SD-6. Copies of "Provisions Governing Qualification SD-6" may be obtained upon application to Commanding Officer, Naval Publications and Forms Center, 5801 Tabor Avenue, Philadelphia, PA 19120.

6.4 Patent notice. The Government does not have royalty-free license under the following patents for the benefit of manufacturers of the item, either for the Government or for use in equipment to be delivered to the Government.

Patent no.	Patent expiration date
US 65,032	11/17/2004
US 260,660	1/8/2002
US 376,866	2/12/2002
US 403,446	1/15/2002
US 751,204	2/7/2002
US 4,330,965	5/25/1999

6.5 Subject term (key word) listing.

Backshells
Cable, fiber optic
Circular
Connectors
Covers, protective
Dust covers
Environmental resistant
Epoxies
Fiber optic
Hermaphroditic
Inserts
Military specification
Multiple termini
Optical performance requirements
Plug
Receptacle
Screw threads
Strain relief, cable
Style, plug and receptacle
Termini
Test plugs

6.6 Changes from previous issue. Asterisks are not used in this revision to identify changes with respect to the previous issue due to the extensiveness of the changes.

Source: https://assist.dla.mil -- Downloaded: 2016-12-30T10:25Z
Check the source to verify that this is the current version before use.

APPENDIX

CONNECTOR INTERFACE DIMENSIONS

10. SCOPE

10.1 This appendix lists the connector interface dimensions and is a mandatory part of the specification. The information contained herein is intended for compliance.

20. APPLICABLE DOCUMENTS

This section is not applicable to this appendix.

30. DRAWINGS

30.1 The connector interface dimension drawings (figures 3 through 10) are listed as follows:

Source: https://assist.dla.mil -- Downloaded: 2016-12-30T10:25Z
Check the source to verify that this is the current version before use.

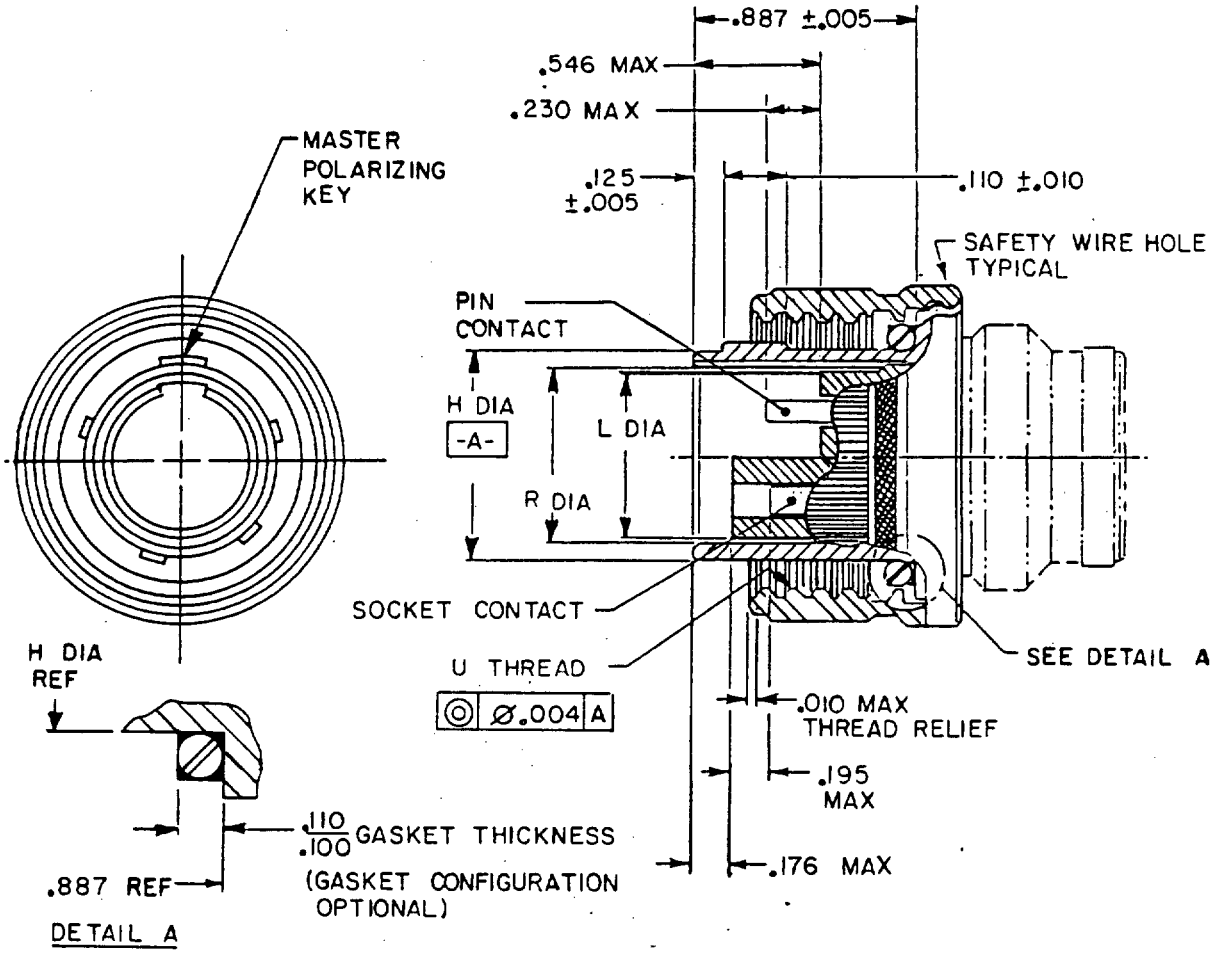

Shell size	U thread class 2B	H dia	R dia	L dia
11	.750-.1P-.2L-D.S.	.502 (12.75) .492 (12.50)	.383 (9.73) .373 (9.47)	.365 (9.27) .361 (9.17)
13	.875-.1P-.2L-D.S.	.626 (15.90) .616 (15.65)	.505 (12.83) .495 (12.57)	.487 (12.37) .483 (12.27)
15	1.062-.1P-.2L-D.S.	.798 (20.27) .788 (20.02)	.683 (17.35) .673 (17.09)	.665 (16.89) .661 (16.79)

Inches	mm
.004	0.10
.005	0.13
.010	0.25
.100	2.54
.110	2.79
.125	3.18
.176	4.47
.195	4.95
.230	5.84
.546	13.87
.887	22.53

FIGURE 3. Interface dimensions, connector, plug, fiber optic.

Source: https://assist.dla.mil -- Downloaded: 2016-12-30T10:25Z
Check the source to verify that this is the current version before use.

NOTES:

1. Dimensions are in inches.
2. Metric equivalents are given for general information only.
3. Metric equivalents are in parentheses.
4. Dimensions apply after plating.
5. Mating key positions and dimensions are shown on figure 5.
6. This design information establishes connector intermating criteria.
7. Rear end connector design for attachment of nonrotatable strain relief hardware and is shown on figure 8.
8. Dimension includes terminus axial float; terminus will move back during mating.
9. See MIL-C-28876/6 through MIL-C-28876/9 for appropriate plug outer configuration dimensions.

FIGURE 3. Interface dimensions, connector, plug, fiber optic - Continued.

Source: https://assist.dla.mil -- Downloaded: 2016-12-30T10:25Z
Check the source to verify that this is the current version before use.

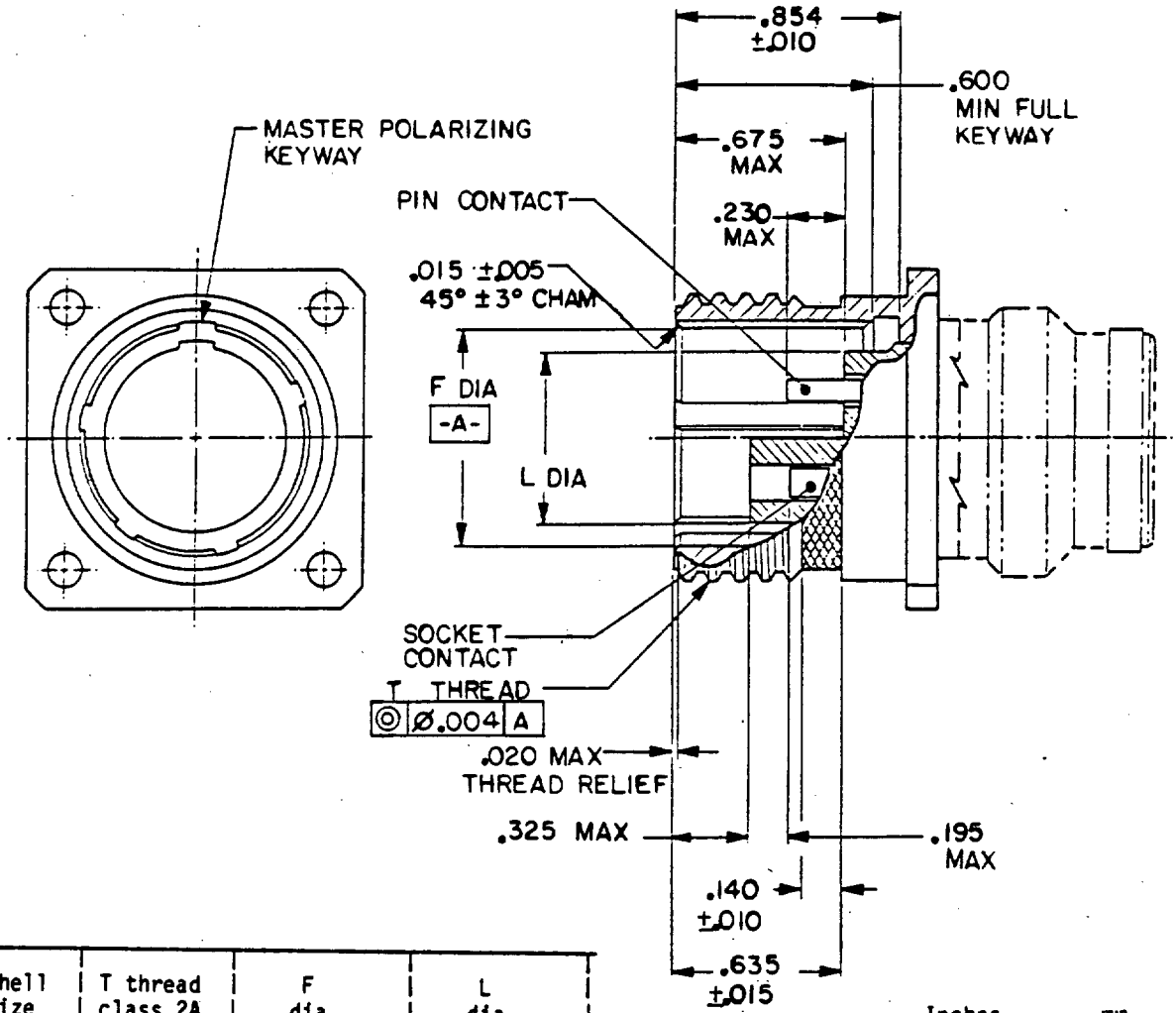

Shell size	T thread class 2A	F dia	L dia
11	.750-.1P-.2L-D.S.	.515 (13.08) .506 (12.85)	.365 (9.27) .361 (9.17)
13	.875-.1P-.2L-D.S.	.639 (16.23) .630 (16.00)	.487 (12.37) .483 (12.27)
15	1.062-.1P-.2L-D.S.	.811 (20.60) .80 (20.3)	.665 (16.89) .661 (16.79)

Inches	mm
.004	0.10
.005	0.13
.010	0.25
.015	0.38
.020	0.51
.140	3.56
.195	4.95
.230	5.84
.325	8.26
.600	15.24
.635	16.13
.675	17.14
.854	21.69

FIGURE 4. Interface dimensions, connector, receptacle, fiber optic.

Source: https://assist.dla.mil -- Downloaded: 2016-12-30T10:25Z
Check the source to verify that this is the current version before use.

NOTES:

1. Dimensions are in inches.
2. Metric equivalents are given for general information only.
3. Metric equivalents are in parentheses.
4. Dimensions apply after plating.
5. Mating key positions and dimensions are shown on figure 5.
6. This design information establishes connector intermating criteria.
7. Rear end connector design for attachment of nonrotatable strain relief hardware and is shown on figure 8.
8. Dimension includes terminus axial float; terminus will move back during mating.
9. See MIL-C-28876/1 through MIL-C-28876/5 and MIL-C-28876/11 through MIL-C-28876/14 for appropriate plug outer configuration dimensions.

FIGURE 4. Interface dimensions, connector, receptacle, fiber optic - Continued.

Source: https://assist.dla.mil -- Downloaded: 2016-12-30T10:25Z
Check the source to verify that this is the current version before use.

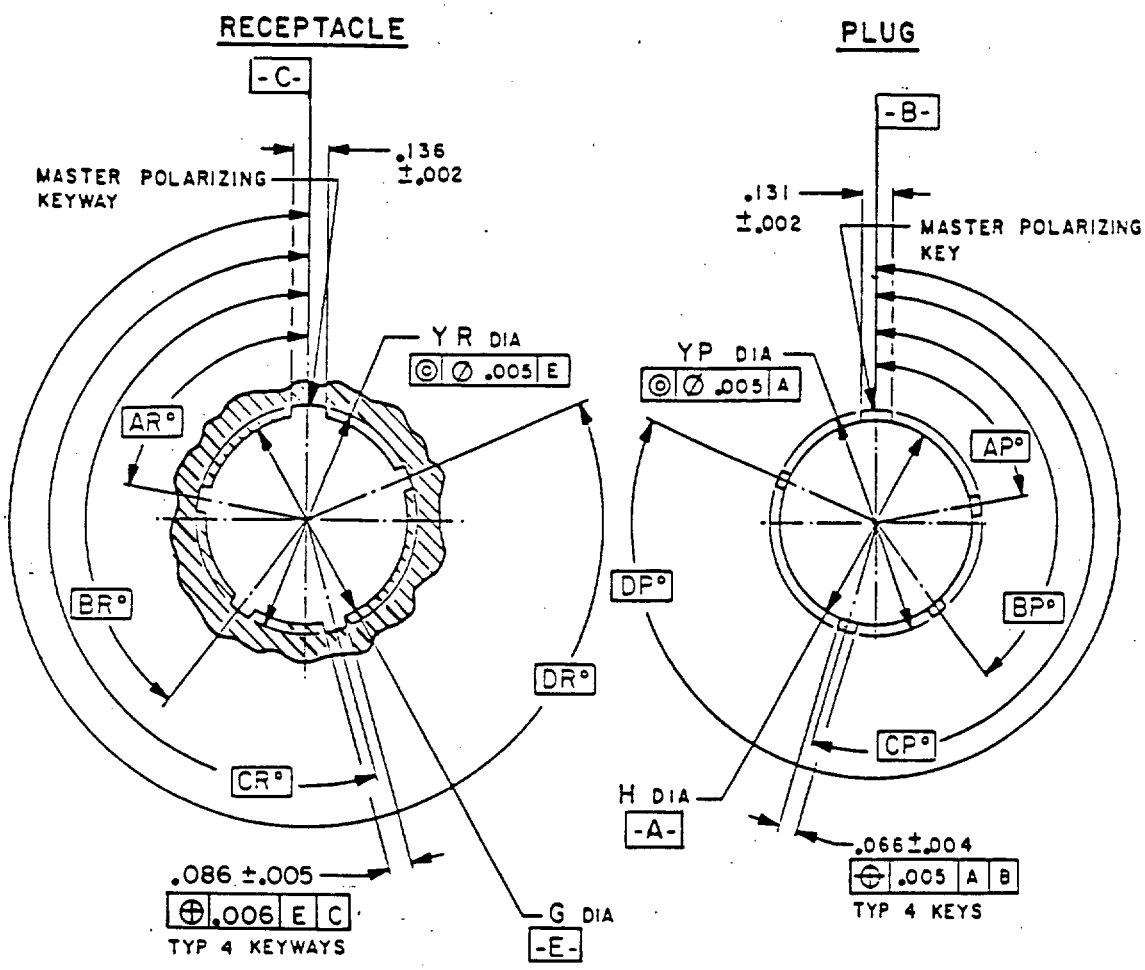

Shell size	G dia	H dia
11	.515 (13.08) .504 (12.80)	.502 (12.75) .492 (12.50
13	.637 (16.18) .628 (15.95)	.626 (15.90) .616 (15.65)
15	.809 (20.55) .800 (20.32)	.798 (20.27) .788 (20.02)

Inches	mm
.002	0.05
.004	0.10
.005	0.13
.006	0.15
.066	1.68
.086	2.18
.131	3.33
.136	3.45

FIGURE 5. Connector, fiber optic, position of key and keyway mating.

Source: https://assist.dla.mil -- Downloaded: 2016-12-30T10:25Z
Check the source to verify that this is the current version before use.

Shell size	Key and keyway arrange-ment	AR° or AP° BSC	BR° or BP° BSC	CR° or CP° BSC	DR° or DP° BSC	YP diameter	YR diameter
11 and 13	1	95	141	208	236	.599 (15.21)	.581 (14.76)
	2	113	156	182	292	.551 (14.00)	.569 (14.45)
	3	90	145	195	252		
	4	53	156	220	255	.683 (17.35)	.705 (17.91)
	5	119	146	176	298	.675 (17.14)	.693 (17.60)
	6	51	141	184	242		
15	1	80	142	196	293	.855 (21.72)	.877 (22.28)
	2	135	170	200	310	.847 (21.51)	.865 (21.97)
	3	49	169	200	244		
	4	66	140	200	257	.925 (23.50)	.947 (24.05)
	5	62	145	180	280	.917 (23.29)	.935 (23.75)
	6	79	153	197	272		

NOTES:
1. Dimensions are in inches.
2. Metric equivalents are given for general information only.
3. Metric equivalents are in parentheses.
4. Dimensions apply after plating.

FIGURE 5. Connector, fiber optic, position of key and keyway, mating- Continued.

Source: https://assist.dla.mil -- Downloaded: 2016-12-30T10:25Z
Check the source to verify that this is the current version before use.

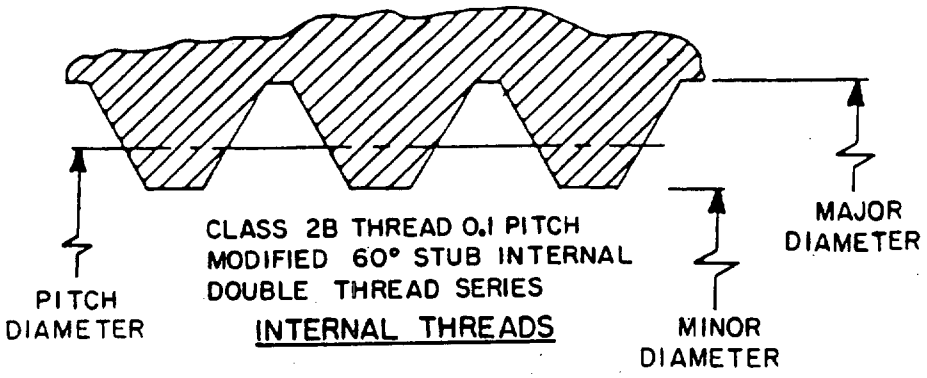

CLASS 2B THREAD 0.1 PITCH
MODIFIED 60° STUB INTERNAL
DOUBLE THREAD SERIES

INTERNAL THREADS

Shell size	Designation		
	Thread size	Pitch	Lead
11	.7500	.1	.2
13	.8750	.1	.2
15	1.0625	.1	.2

Inches	mm	Inches	mm
.0100	0.254	.8392	21.316
.0120	0.51	.8490	21.565
.020	0.305	.8590	21.819
.1	3.	.8750	22.225
.2	5.	.8790	22.327
.7042	17.887	.8950	22.733
.7142	18.141	1.0025	25.464
.7240	18.390	1.0145	25.768
.7340	18.644	1.0285	26.124
.7500	19.050	1.0405	26.429
.7540	19.152	1.0625	26.988
.7700	19.588	1.0665	27.089
.8292	21.062	1.0865	27.597

Shell size	Internal thread limits of size							
	Minor diameter			Pitch diameter			Major diameter	
	Limits		Tolerance	Limits		Tolerance	Limits	
	Min	Max		Min	Max		Min	Max
11	.7042	.7142	.0100	.7240	.7340	.0100	.7540	.7700
13	.8292	.8392	.0100	.8490	.8590	.0100	.8790	.8950
15	1.0025	1.0145	.0120	1.0285	1.0405	.0120	1.0665	1.0865

NOTES:
1. Dimensions are in inches.
2. Metric equivalents are given for general information only.
3. Formulas for these values are given in table VII of MIL-STD-1373.
4. For all other dimensions not shown above, refer to MIL-STD-1373.

FIGURE 6. Connector mating threads (internal).

Source: https://assist.dla.mil -- Downloaded: 2016-12-30T10:25Z
Check the source to verify that this is the current version before use.

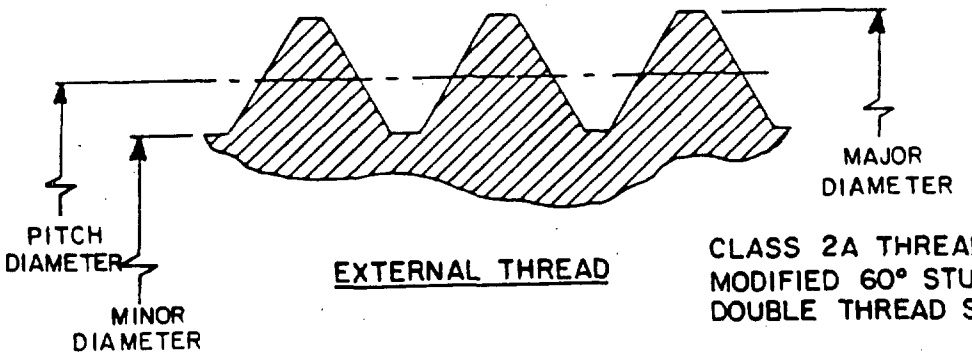

EXTERNAL THREAD

CLASS 2A THREAD 0.1 PITCH
MODIFIED 60° STUB EXTERNAL
DOUBLE THREAD SERIES

Shell size	Designation		
	Thread size	Pitch	Lead
11	.7500	.1	.2
13	.8750	.1	.2
15	1.0625	.1	.2

Inches	mm	Inches	mm
.0015	0.038	.8035	20.409
.0020	0.051	.8175	20.764
.0080	0.203	.8395	21.323
.0100	0.254	.8475	21.526
.0120	0.305	.8655	21.984
.1	3.	.8735	22.187
.2	5.	.8750	22.225
.6785	17.234	.9705	24.651
.6925	17.590	.9885	25.108
.7145	18.148	1.0165	25.819
.7225	18.352	1.0265	26.073
.7405	18.809	1.0485	26.632
.7485	19.012	1.0605	26.937
.7500	19.050		

Shell size	Internal thread limits of size							
	Minor diameter			Pitch diameter			Major diameter	
	Limits		Tolerance	Limits		Tolerance	Limits	
	Min	Max		Min	Max		Min	Max
11	.7485	.7405	.0080	.7225	.7145	.0080	.6925	.6785
13	.8735	.8655	.0080	.8475	.8395	.0080	.8175	.8035
15	1.0605	1.0485	.0120	1.0265	1.0165	.0100	.9885	.9705

NOTES:
1. Dimensions are in inches.
2. Metric equivalents are given for general information only.
3. Formulas for these values are given in table VII of MIL-STD-1373.
4. For all other dimensions not shown above, refer to MIL-STD-1373.

FIGURE 7. Connector mating threads (external).

Source: https://assist.dla.mil -- Downloaded: 2016-12-30T10:25Z
Check the source to verify that this is the current version before use.

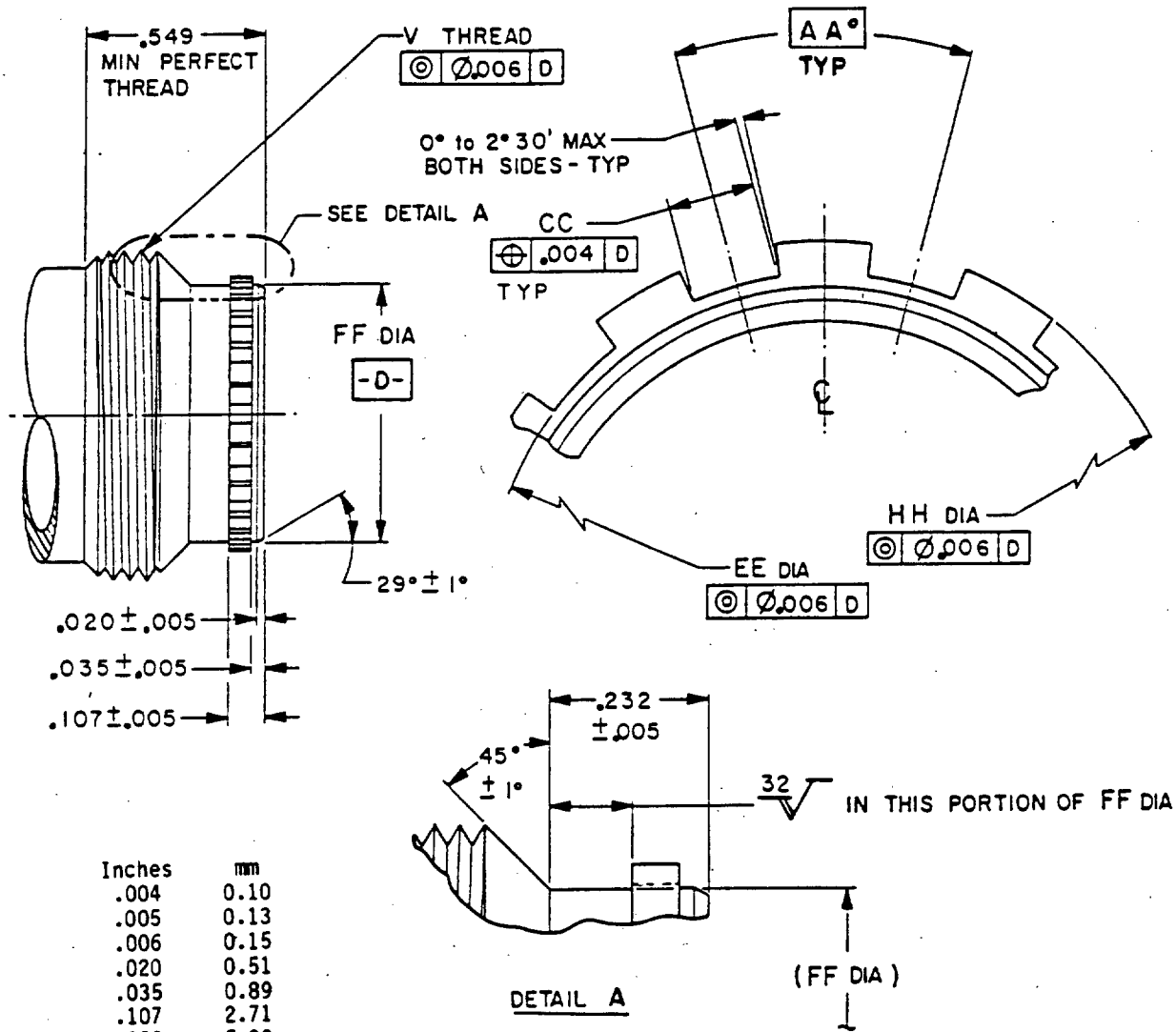

Inches	mm
.004	0.10
.005	0.13
.006	0.15
.020	0.51
.035	0.89
.107	2.71
.232	5.89
.549	13.94

FIGURE 8. Connector back-end configuration.

Source: https://assist.dla.mil -- Downloaded: 2016-12-30T10:25Z
Check the source to verify that this is the current version before use.

Shell size	AA BSC	CC	V thread class 2A	EE diameter	FF diameter	HH diameter
11	20°	.0534 (1.356) .0484 (1.229)	.750-20 UNEF	.547 (13.89) .541 (13.74)	.538 (13.67) .532 (13.51)	.571 (14.50) .565 (14.35)
13	20°	.0634 (1.610) .0584 (1.483)	.875-20 UNEF	.662 (16.81) .656 (16.66)	.653 (16.59) .647 (16.43)	.686 (17.42) .680 (17.27)
15	18°	.0679 (1.725) .0629 (1.598)	1.000-20 UNEF	.797 (20.24) .791 (20.09)	.788 (20.02) .782 (19.86)	.821 (20.85) .815 (20.70)

NOTES:
1. Dimensions are in inches.
2. Metric equivalents are given for general information only.
3. Metric equivalents are in parentheses.
4. Dimensions apply after plating.
5. This design information establishes interface criteria for strain relief assembly attachment in accordance with figure 9.

FIGURE 8. Connector back-end configuration - Continued.

Source: https://assist.dla.mil -- Downloaded: 2016-12-30T10:25Z
Check the source to verify that this is the current version before use.

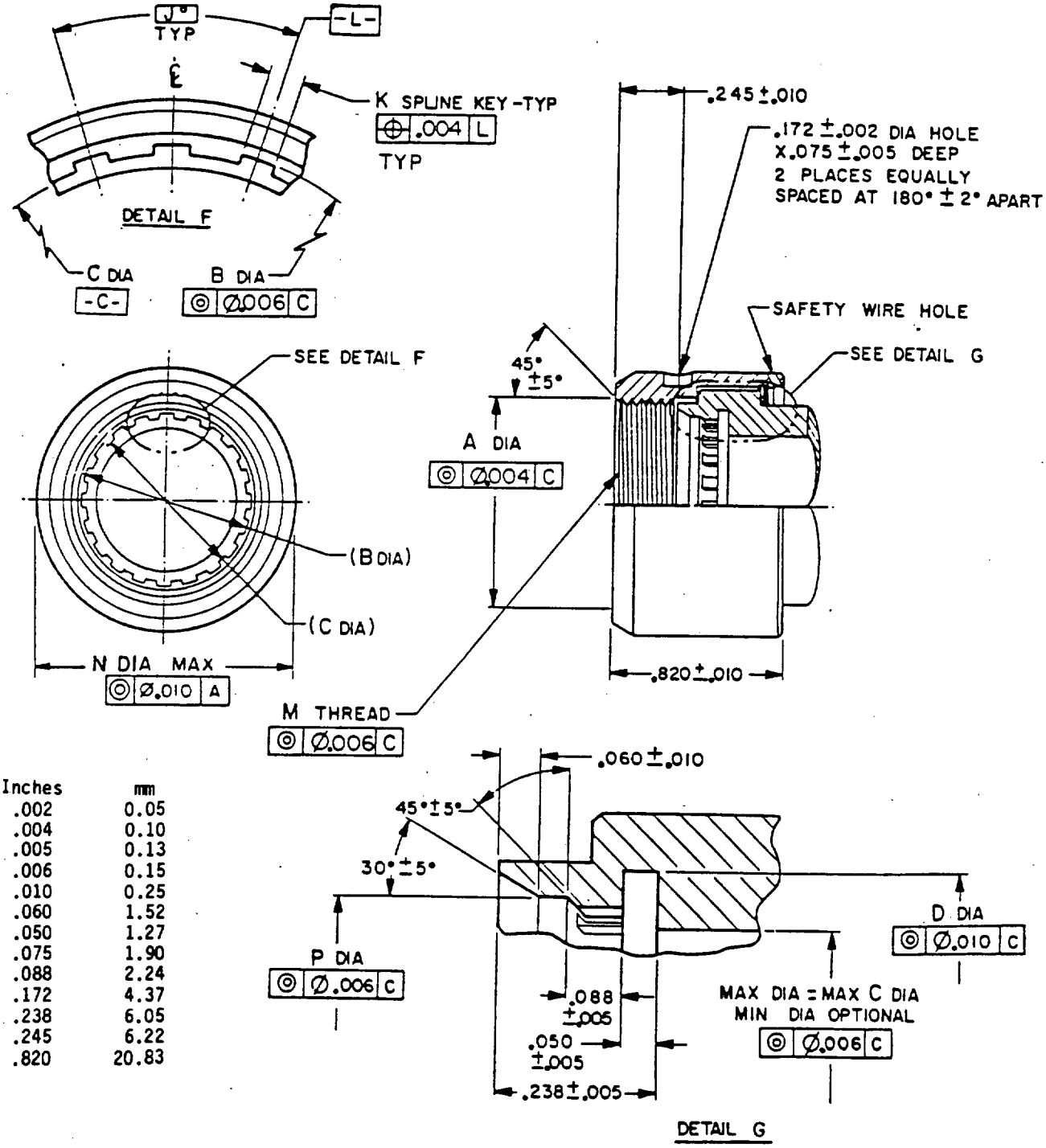

Inches	mm
.002	0.05
.004	0.10
.005	0.13
.006	0.15
.010	0.25
.060	1.52
.050	1.27
.075	1.90
.088	2.24
.172	4.37
.238	6.05
.245	6.22
.820	20.83

FIGURE 9. Interface dimensions, connector, fiber optic strain relief assembly attachment.

Source: https://assist.dla.mil -- Downloaded: 2016-12-30T10:25Z
Check the source to verify that this is the current version before use.

Shell size	A dia	B dia	C dia	D dia	J BSC	K dia	M thread class 2B	N dia max	P dia
11	.770 (19.56) .750 (19.05)	.585 (14.86) .579 (14.71)	.559 (14.20) .553 (14.71)	.647 (16.43) .625 (15.88)	40°	.0445 (1.130) .0395 (1.003)	.750-20 UNEF	.960 (24.38)	.617 (15.57) .605 (15.37)
13	.895 (22.73) .875 (22.22)	.700 (17.78) .694 (17.63)	.674 (17.12) .668 (16.97)	.762 (19.35) .740 (18.80)	40°	.0545 (1.384) .0495 (1.257)	.875-20 UNEF	1.085 (27.56)	.732 (18.59) .720 (18.29)
15	1.020 (25.91) 1.000 (25.40)	.835 (21.21) .803 (21.06)	.809 (20.55) .803 (20.40)	.897 (22.78) .875 (22.22)	36°	.0590 (1.499) .0540 (1.372)	1.000-20 UNEF	1.255 (31.88)	.867 (22.02) .855 (21.72)

NOTES:
1. Dimensions are in inches.
2. Metric equivalents are given for general information only.
3. Metric equivalents are in parentheses.
4. Dimensions apply after plating.
5. The coupling nut shall be captive and free to rotate on strain relief assembly.

FIGURE 9. Interface dimensions, connector, fiber optic strain relief assembly attachment - Continued.

Source: https://assist.dla.mil -- Downloaded: 2016-12-30T10:25Z
Check the source to verify that this is the current version before use.

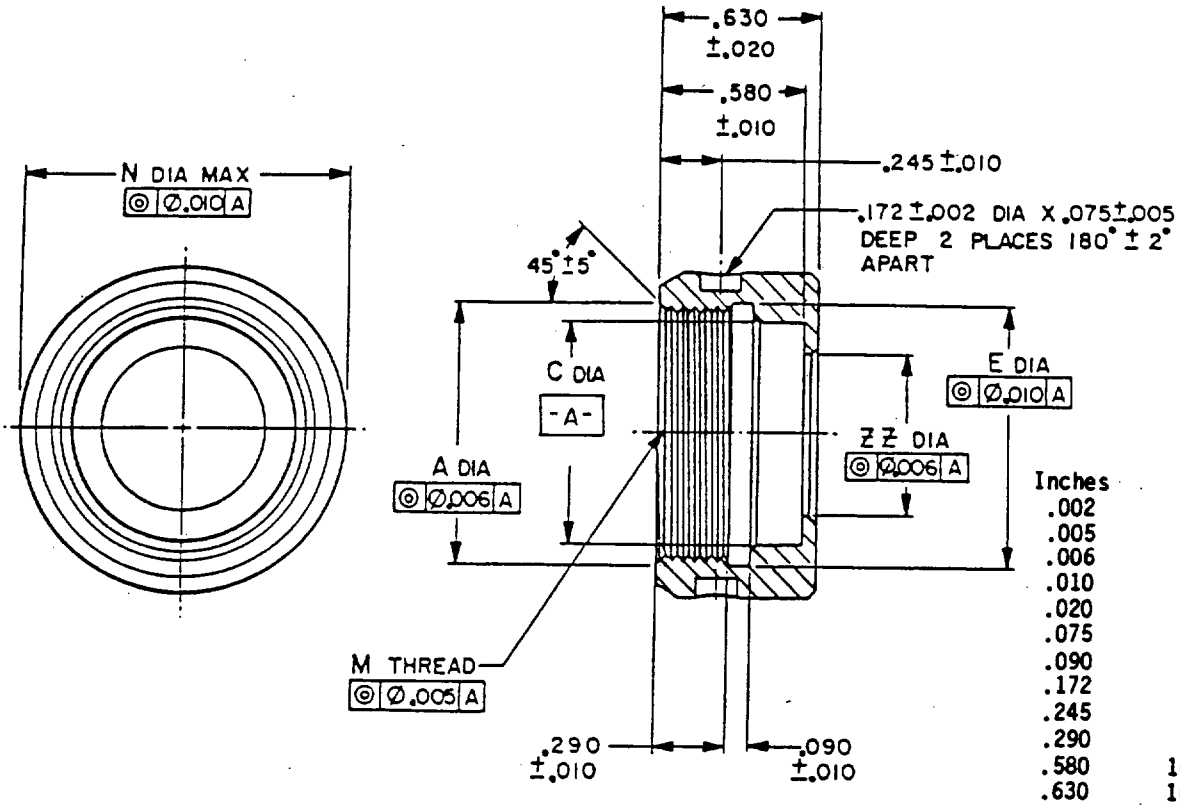

Inches	mm
.002	0.05
.005	0.13
.006	0.15
.010	0.25
.020	0.51
.075	1.90
.090	2.29
.172	4.37
.245	6.22
.290	7.37
.580	14.73
.630	16.00

Shell size	U thread class 2B	A dia	C dia	E dia	N dia max	ZZ dia
11	.750-20 UNEF	.766 (19.46) .754 (19.15)	.616 (15.65) .594 (15.09)	.767 (19.48) .753 (19.13)	.960 (24.38)	.340 (8.64)
13	.875-20 UNEF	.891 (22.63) .879 (22.33)	.731 (18.57) .709 (18.01)	.892 (22.66) .878 (22.30)	1.085 (27.56)	.460 (11.68)
15	1.000-20 UNEF	1.016 (25.81) 1.004 (25.50)	.866 (22.00) .844 (21.44)	1.017 (25.83) 1.003 (25.48)	1.255 (31.88)	.645 (16.38)

NOTES:
1. Dimensions are in inches.
2. Metric equivalents are given for general information only.
3. Metric equivalents are in parentheses.
4. Dimensions apply after plating.

FIGURE 10. Interface dimensions, connector, fiber optic strain relief assembly attachment.

Source: https://assist.dla.mil -- Downloaded: 2016-12-30T10:25Z
Check the source to verify that this is the current version before use.

CONCLUDING MATERIAL

Custodians:
Army - CR
Navy - EC
Air Force - 85

Review activities:
Army - MI
Navy - AS, MC, SH
Air Force - 11, 17, 19, 80, 90, 99
NASA - NA
DLA - ES

User activities:
Navy - OS, YD
Air Force - 13, 14

Preparing activity:
Navy - EC

Agent:
DLA - ES

(Project 6060-0066)

Source: https://assist.dla.mil -- Downloaded: 2016-12-30T10:25Z
Check the source to verify that this is the current version before use.