MILITARY STANDARD

MIL-STD-1388-1A
Notice 3
28 Mar 91

LOGISTIC SUPPORT ANALYSIS

TO ALL HOLDERS OF MIL-STD-1388-1A

1. THE FOLLOWING PAGES OF MIL-STD-1388-1A HAVE BEEN REVISED AND SUPERSEDE THE PAGES LISTED:

NEW PAGE(S)	DATE	SUPERSEDED PAGE(S)	DATE
iii	28 March 1991	iii	11 April 1983
iv	11 April 1983	iv	REPRINTED WITHOUT CHANGE
1	11 April 1983	1	REPRINTED WITHOUT CHANGE
2	28 March 1991	2	1 April 1990
3	28 March 1991	3	11 April 1983
4	11 April 1983	4	REPRINTED WITHOUT CHANGE
9	11 APRIL 1983	4	REPRINTED WITHOUT CHANGE
10	28 March 1991	10	11 April 1983
15	28 March 1991	15	REPRINTED WITHOUT CHANGE
16	28 March 1991	16	5 June 1990
19	28 March 1991	19	5 June 1990
20	28 March 1991	20	5 June 1990
21	28 March 1991	21	11 April 1983
22	28 March 1991	22	REPRINTED WITHOUT CHANGE
23	28 March 1991	23	11 April 1983
24	28 March 1991	24	11 April 1983
25	28 March 1991	25	9 February 1988
26	28 March 1991	26	5 June 1990
27	28 March 1991	27	REPRINTED WITHOUT CHANGE
28	28 March 1991	28	5 June 1990
31	28 March 1991	31	5 June 1990
32	28 March 1991	32	5 June 1990
33	28 March 1991	33	11 April 1983
34	11 April 1983	34	REPRINTED WITHOUT CHANGE
37	1 April 1990	37	REPRINTED WITHOUT CHANGE
38	28 March 1991	38	5 June 1990
41	28 March 1991	41	5 June 1990
42	28 March 1991	42	5 June 1990
43	28 March 1991	43	11 April 1983
44	11 April 1983	44	REPRINTED WITHOUT CHANGE
49	28 March 1991	49	5 June 1990

AMSC NO A3202 FSC ILSS

DISTRIBUTION STATEMENT A. Approved for public release: distribution is unlimited.

Source: https://assist.dla.mil -- Downloaded: 2016-12-05T13:04Z
Check the source to verify that this is the current version before use.

50	9 February 1988	50	REPRINTED WITHOUT CHANGE
57	11 April 1983	57	REPRINTED WITHOUT CHANGE
58	28 March 1991	58	11 April 1983
59	11 April 1983	59	REPRINTED WITHOUT CHANGE
60	28 March 1991	60	11 April 1983
61	11 April 1983	61	REPRINTED WITHOUT CHANGE
62	28 March 1991	62	11 April 1983
63	11 April 1983	63	REPRINTED WITHOUT CHANGE
64	11 APRIL 1983	63	REPRINTED WITHOUT CHANGE
65	28 March 1991	65	11 April 1982
66	11 April 1983	66	REPRINTED WITHOUT CHANGE
79	11 April 1983	79	REPRINTED WITHOUT CHANGE
80	28 March 1991	80	11 April 1983
83	28 March 1991	83	11 April 1983
84	28 March 1991	84	11 April 1983
85	28 March 1991	85	11 April 1983
86	11 April 1983	86	REPRINTED WITHOUT CHANGE
109	11 April 1983	109	REPRINTED WITHOUT CHANGE
110	28 March 1991	110	11 April 1983
111	28 March 1991	111	11 April 1983
112	28 March 1991	112	11 April 1983
112a	28 March 1991	NEW	

2. RETAIN THIS NOTICE AND INSERT BEFORE TABLE OF CONTENTS

3. Holders of MIL-STD-1388-1A will verify that the page change indicated herein have been entered. This notice will be retained as a check sheet. This issuance is a separate publication. Each notice is to be retained by stocking points until the Military Standard is completely revised or cancelled.

Custodians:
Army - TM
Navy - AS
Air Force - 95

Preparing Activity
Army - TM

(Project No. ILSS-0005)

Reviewing Activities:
Army - ME, MI, AV, AT, CR
Navy - SH, YD, OS, MC
Air Force - 11, 13, 15, 16, 17
Miscellaneous DOD/NASA - NS, NA, DC, DH, DS

Source: https://assist.dla.mil -- Downloaded: 2016-12-05T13:04Z
Check the source to verify that this is the current version before use.

FOREWORD

This standard implements the Logistic Support Analysis (LSA) guidelines and requirements established by Department of Defense (DOD) Instruction 5000.2, Major System Acquisition Procedures. The requirements of this standard are applicable to major and less-than-major system/equipment acquisition programs, major modification programs, and applicable research and development projects. The goal of this standard is a single, uniform approach by the Military Services for conducting those activities necessary to (a) cause supportability requirements to be an integral part of system requirements and design, (b) define support requirements that are optimally related to the design and to each other, (c) define the required support during the operational phase, and (d) prepare attendant data products. LSA is the selective application of scientific and engineering efforts undertaken during the acquisition process, as part of the system engineering and design process, to assist in complying with supportability and other Integrated Logistic Support (ILS) objectives through the use on an iterative process of definition, synthesis, tradeoff, test, and evaluation.

This standard provides general requirements and descriptions of tasks which, when performed in a logical and iterative nature, comprise the LSA process. The tasks are structured for maximum flexibility in their application. In addition to the general requirements and task description sections, this standard contains an application guidance appendix which provides rationale for the selection and tailoring of the tasks to meet program objectives in a cost effective manner. This document is intentionally structured to discourage indiscriminate blanket applications. Tailoring is forced by requiring that specific tasks be selected and that certain essential information relative to implementation of the selected tasks be provided by the requiring authority. Additionally, the user must be aware that when the LSA process, or a portion thereof, is implemented contractually, more than the LSA statement of work and LSA deliverable data requirements must be considered. Readiness and supportability requirements and objectives must be appropriately integrated and embodied in specifications, general and special contract provisions, evaluation factors for award, instructions to offerors, and other sections of the solicitation document.

Defense system acquisitions are directed toward achieving the best balance between cost, schedule, performance, and supportability. Increasing awareness that supportability factors, such as manpower and personnel skills, are a critical element in system effectiveness has necessitated early support analyses, the establishment of system constraints, design goals, thresholds and criteria in these areas, and the pursuit of design, operational, and support approaches which optimize life cycle costs and the resources required to operate and maintain systems. This standard was prepared to identify these early analysis requirements and foster their cost effective application during system acquisitions.

Supersedes page iii of 11 April 1983

Source: https://assist.dla.mil -- Downloaded: 2016-12-05T13:04Z
Check the source to verify that this is the current version before use.

CONTENTS

Paragraph		Page
1.	SCOPE	1
1.1	Purpose	1
1.2	Application of Standard	1
1.2.1	Tailoring of Task Descriptions	1
1.3	Method of Reference	1
1.4	Scope of Performance	1
1.5	Parts	1
2.	REFERENCED DOCUMENTS	1
2.1	General	1
3.	DEFINITIONS	2
3.1	General	2
4.	GENERAL REQUIREMENTS	2
4.1	LSA Program	2
4.1.1	Program Interfaces and Coordination	2
4.1.2	LSA Process	2
4.2	Quantitative Requirements	3
4.3	Management, Surveillance, and Control	3
4.4	LSA Documentation	3
4.4.1	Logistic Support Analysis Record Format	4
5.	TASK DESCRIPTIONS	4
5.1	General	4
5.1.1	Task Structure	4
5.2	Task Section 100 - Program Planning and Control	9
5.2.1	Task 101 - Development of an Early Logistic Support Analysis Strategy	10
5.2.2	Task 102 - Logistic Support Analysis Plan	12
5.2.3	Task 103 - Program and Design Reviews	15
5.3	Task Section 200 - Mission and Support Systems Definition	18
5.3.1	Task 201 - Use Study	19
5.3.2	Task 202 - Mission Hardware, Software, and Support System Standardization	21
5.3.3	Task 203 - Comparative Analysis	23
5.3.4	Task 204 - Technological Opportunities	26
5.3.5	Task 205 - Supportability and Supportability Related Design Factors	28
5.4	Task Section 300 - Preparation and Evaluation of Alternatives	30
5.4.1	Task 301 - Functional Requirements Identification	31

Source: https://assist.dla.mil -- Downloaded: 2016-12-05T13:04Z
Check the source to verify that this is the current version before use.

1. SCOPE

1.1 Purpose. This standard provides general requirements and task descriptions governing performance of Logistic Support Analysis (LSA) during the life cycle of systems and equipment.

1.2 Application of Standard. This standard applies to all system/equipment acquisition programs, major modification programs, and applicable research and development projects through all phases of the system/equipment life cycle. This standard is for use by both contractor and Government activities performing LSA on systems/equipment to which this standard applies. As used in this standard, the "requiring authority" is generally a Government activity but may be a contractor when LSA requirements are levied on subcontractors. The "performing activity" may be either a contractor or Government activity. The use of the term "contract" in this standard includes any document of agreement between organizations to include between a Government activity and another Government activity, between a Government activity and a contractor, or between a contractor and another contractor.

1.2.1 Tailoring of Task Descriptions. Individual tasks contained in this standard shall be selected and the selected task descriptions tailored to specific acquisition program characteristics and life cycle phase. Application guidance and rationale for selecting tasks and tailoring task descriptions to fit the needs of a particular program are included in Appendix A. This appendix is not contractual and does not establish requirements.

1.3 Method of Reference. This standard, the specific task description number(s), applicable task input to be specified by the requiring authority, and applicable task outputs shall be included or referenced in the Statement of Work (SOW).

1.4 Scope of Performance. The performing activity shall comply with the general requirements section and specific task requirements only to the degree specified in the contract.

1.5 Parts. MIL-STD-1388-1 is Part 1 of two parts.

2. REFERENCED DOCUMENTS

2.1 General. Unless otherwise specified, the following standards and handbooks of the issue listed in that issue of the Department of Defense Index of Specifications and Standards (DoDISS) specified in the solicitation form a part of this standard to the extent specified herein.

Source: https://assist.dla.mil -- Downloaded: 2016-12-05T13:04Z
Check the source to verify that this is the current version before use.

Military Standards.

MIL-STD-1366	Materiel Transportation System Dimensional and Weight Constrains, Definition of.
MIL-STD-1388-2	DOD Requirements for a Logistic Support Analysis Record.
MIL-STD-1478	Task Performance Analysis
MIL-STD-1629	Procedures for Performing a Failure Mode, Effects, and Criticality Analysis.
MIL-H-46855	Human Engineering Requirements for Military Systems, Equipment, and Facilities

(Copies of specifications, standards, drawings, and publications required by contractors in conjunction with specific procurement functions should be obtained from the procuring activity or as directed by the contracting officer.)

3. DEFINITIONS

3.1 General. Key terms used in this standard are defined in the Glossary, Appendix B.

4. GENERAL REQUIREMENTS

4.1 LSA Program. An effective LSA program shall be established and maintained as part of the ILS program. It shall be planned, integrated, developed, and conducted in conjunction with other requirement definition, design, development, production, and deployment functions to cost effectively achieve overall program objectives. The LSA program shall be established consistent with the type and phase of the acquisition program, and procedures shall be established to assure that the LSA program is an integral part of the system engineering process. Interfaces between the LSA program and other system engineering programs shall be identified. The LSA program shall include the management and technical resources, plans, procedures, schedules, and controls for the performance of LSA requirements.

4.1.1 Program Interfaces and Coordination. Maximum use shall be made of analyses and data resulting from requirements of other system engineering programs to satisfy LSA input requirements. Tasks and data required by this standard, which are also required by other standards and specifications, shall be coordinated and combined to the maximum extent possible. LSA data shall be based upon, and traceable to, other system engineering data and activities where applicable. Design and performance information shall be captured, disseminated, and formally controlled from the beginning of the design effort to serve as the design audit trail for logistic support resource planning, design tradeoff study inputs, and LSA documentation preparation.

Source: https://assist.dla.mil -- Downloaded: 2016-12-05T13:04Z
Check the source to verify that this is the current version before use.

4.1.2 LSA Process. A systematic and comprehensive analysis shall be conducted on an iterative basis through all phases of the system/equipment life cycle to satisfy supportability (supportability includes all elements of ILS as defined in DODI 5000.2 required to operate and maintain the system/equipment) objectives. The level of detail of the analyses and the timing of task performance shall be tailored to each system/equipment and shall be responsive to program schedules and milestones. Figure 1 depicts the major LSA process objectives by program phase. Figures 2 and 3 provide an overview of the LSA process and a detailed flow chart of the LSA process. Task and subtask applicability guidance by program phase is provided in Appendix A, Table III.

4.2 Quantitative Requirements. Quantitative supportability and supportability related design requirements for the system/equipment shall be included in appropriate sections of the system or end item specifications, other requirements documents, or contracts, as appropriate subtier values not established by the requiring authority shall be established by the performing activity. Requirements shall be defined in terms related to operational readiness, demand for logistic support resources, and operating and support (O&S) costs, as applicable to the type of system/equipment.

4.3 Management, Surveillance, and Control. Management procedures shall be established to assure continuing assessment of analysis results and to allow for system/equipment design and LSA program adjustments as required. Feedback and corrective action procedures shall be established which include controls to assure that deficiencies are corrected and documented. Assessments, validations, and verifications shall be conducted throughout the system/equipment life cycle to demonstrate, within stated confidence levels, the validity of the analyses performed and the products developed from the analyses, and to adjust the analysis results and products as applicable.

4.4 LSA Documentation. LSA documentation shall consist of all data resulting from analysis tasks conducted under this standard and shall be the primary source of validated, integrated design related supportability data pertaining to an acquisition program. LSA documentation shall be developed and maintained commensurate with design, support, and operational concept development, and shall be updated to reflect changes or availability of better information based on testing, configuration changes, operational concept changes, and support concept changes during the acquisition process. Accumulated LSA documentation shall provide an audit trail of supportability and supportability related design analyses and decisions, and shall be the basis for actions and documents related to manpower and personnel requirements, training programs, provisioning, maintenance planning, resources allocation, funding decisions, and other logistic support resource requirements. Configuration control procedures shall be established over LSA documentation updates to assure proper coordination among other system engineering programs, the LSA program, and the development of ILS documents

Source: https://assist.dla.mil -- Downloaded: 2016-12-05T13:04Z
Check the source to verify that this is the current version before use.

using LSA data. Deliverable documentation shall be as specified in applicable data item descriptions cited on contract data requirements list (CDRL), DD Form 1423. When the requiring authority desires delivery of the task outputs, as described in paragraph 5 of this standard, for LSA tasks or subtasks cited in the SOW, then appropriate data item descriptions and delivery information must be included in the CDRL.

4.4.1 Logistic Support Analysis Record Format. The logistic support analysis record is a subset of LSA documentation and LSAR data elements shall conform to the requirements of MIL-STD-1388-2. Deliverable LSAR data shall be as specified in data item descriptions cited on the CDRL.

5. TASK DESCRIPTIONS

5.1 General. The LSA tasks are divided into five general sections: Section 100, Program Planning and Control; Section 200, Mission and Support Systems Definition; Section 300, Preparation and Evaluation of alternatives; Section 400, Determination of Logistic Support Resource Requirements; and Section 500, Supportability Assessment. Table I identifies the general purpose of each section, the individual tasks contained in each section, and the general purpose of each task and subtask.

5.1.1 Task Structure. Each individual task is divided into four parts; purpose, task description, task input, and task output. The purpose provides the general reason for performing the task. The task description provides the detailed subtasks which comprise the overall task. It is not intended that all tasks and or subtasks be accomplished in the sequence presented. The sequence of tasks and subtask accomplishment should be tailored to the individual acquisition program. Where applicable, the subtasks are organized to correspond with relative timing of performance during the acquisition process. Consequently, for some tasks, all subtasks may not be required to be performed for a given contract period. In these cases, the SOW shall specify the applicable subtask requirements. (See Appendix A for guidance.) The task input identifies the general information required to define the scope of and perform each task. That input information which shall be specified by the requiring authority in the SOW is annotated by an asterisk (*). The task output identifies the expected results from performance of the task. When an element of the task input or task output is only applicable to certain subtasks, the applicable subtask numbers are identified in parentheses following the element. Where subtask numbers are not listed, that element is applicable to all subtasks listed enter the task description.

Source: https://assist.dla.mil -- Downloaded: 2016-12-05T13:04Z
Check the source to verify that this is the current version before use.

TASK SELECTION 100

PROGRAM PLANNING AND CONTROL

Reprinted without change

Source: https://assist.dla.mil -- Downloaded: 2016-12-05T13:04Z
Check the source to verify that this is the current version before use.

TASK 101

DEVELOPMENT OF AN EARLY LOGISTIC SUPPORT ANALYSIS STRATEGY

101.1 PURPOSE. To develop a proposed LSA program strategy for use early in an acquisition program, and to identify the LSA tasks and subtasks which provide the best return on investment.

101.2 TASK DESCRIPTION

101.2.1 Prepare potential supportability objectives for the new system/equipment, identify and document the risk of accomplishing these objectives, and identify proposed LSA tasks and subtasks to be performed in each phase of the acquisition program. Identify the organizations to perform each task and subtask. The proposed supportability objectives and analysis tasks and subtasks shall be based on the following factors:

a. The probable design, maintenance concept, and operational approaches for the new system/equipment and gross estimates of the reliability and maintainability (R&M), O&S costs, logistic support resources, and readiness characteristics of each design and operational approach.

b. The availability, accuracy, and relevance of readiness, O&S cost, and logistic support resource data required to perform the proposed LSA tasks and subtasks.

c. The potential design impact of performing the LSA tasks and subtasks.

101.2.2 Estimate the cost to perform each task and subtask identified under 101.2.1 and the cost effectiveness of performing each, given the projected costs and schedule constraints.

101.2.3 Update the LSA strategy as required based on analysis results, program schedule modifications, and program decisions.

101.3 TASK INPUT

101.3.1 Expected mission and functional requirements for the new system/equipment.*

101.3.2 Expected program funding and schedule constraints and other known key resource constraints that would impact support of the system/equipment such as projected deficits in numbers or skills of available personnel, limited priorities on strategic materiel, etc.*

101.3.3 Data bases available from the requiring authority for use in LSA tasks.*

101.3.4 Delivery identification of any data item required.*

Supersedes page 10 of 11 April 1983

Source: https://assist.dla.mil -- Downloaded: 2016-12-05T13:04Z
Check the source to verify that this is the current version before use.

TASK 103

PROGRAM AND DESIGN REVIEWS

103.1 PURPOSE. To establish a requirement for the performing activity to plan and provide for official review and control of released design information with LSA program participation in a timely and controlled manner, and to assure that the LSA program is proceeding in accordance with the contractual milestones so that the supportability and supportability related design requirements will be achieved.

103.2 TASK DESCRIPTION

103.2.1 Establish and document design review procedures (where procedures do not already exist) which provide for official review and control of released design information with LSA program participation in a timely and controlled manner. These procedures shall define accept/reject criteria pertaining to supportability requirements, the method of documenting reviews, the types of design documentation subject to review, and the degree of authority of each reviewing activity.

103.2.2 Formal review and assessment of supportability and supportability related design contract requirements shall be an integral part of each system/equipment design review (e.g., system design review (SDR), preliminary design review (PDR), critical design review (CDR), etc.) specified by the contract. The performing activity shall schedule reviews with subcontractors and suppliers, as appropriate, and inform the requiring authority in advance of each review. Results of each system/equipment design review shall be documented. Design reviews shall identify and discuss all pertinent aspects of the LSA program. Agendas shall be developed and coordinated to address at least the following topics as they apply to the program phase activity and the review being conducted.

a. LSA conducted by task and WBS element.

b. Supportability assessment of proposed design features including supportability, cost, and readiness drivers and new or critical logistic support resource requirements.

c. Corrective actions considered, proposed, or taken, such as:

(1) Support alternatives under consideration.

(2) System/equipment alternatives under consideration.

(3) Evaluation and tradeoff analysis results.

(4) Comparative analysis with existing systems/equipment.

(5) Design or redesign actions proposed or taken.

Source: https://assist.dla.mil -- Downloaded: 2016-12-05T13:04Z
Check the source to verify that this is the current version before use.

d. Review of supportability and supportability related design requirements (with review of specifications as developed).

e. Progress toward establishing or achieving supportability goals.

f. LSA documentation required, completed, and scheduled.

g. Design, schedule, or analysis problems affecting supportability.

h. Identification of supportability related design recommendations to include a description of the recommendation; whether or not it has been approved or is pending; rationale for approval (e.g., cost savings, maintenance burden reductions, supply support reductions, reliability improvements, safety or health hazard reduction etc.).

i. Other topics and issues as appropriate.

103.2.3 Formal review and assessment of supportability and supportability related design contract requirements shall be an integral part of each system/equipment program review specified by the contract. Program reviews include, but are not limited to, ILS management team meetings, reliability program reviews, maintainability program reviews, technical data reviews, test integration reviews, training program reviews, human engineering program reviews, system safety program reviews and supply support reviews. The performing activity shall schedule program reviews with subcontractors and suppliers, as appropriate, and inform the requiring authority in advance of each review. Results of each system/equipment program review shall be documented. Program reviews shall identify and discuss all pertinent aspects of the LSA program. Agendas shall be developed and coordinated to address at least the topics listed under 103.2.2 as they apply to the program phase activity and the review being conducted.

103.2.4 The LSA program shall be planned and scheduled to permit the performing activity and the requiring authority to review program status. The status of the LSA program shall be assessed at LSA reviews specified by the contract. The performing activity shall schedule LSA reviews with subcontractors and suppliers, as appropriate, and inform the requiring authority in advance of each review. Results of each LSA review shall be documented. LSA reviews shall identify and discuss all pertinent aspects of the LSA program to a more detailed level than that covered at design and program reviews. Agendas shall be developed and coordinated to address at least the topics listed under 103.2.2 as they apply to the program phase activity and the review being conducted.

103.3 TASK INPUT

103.3.1 Identification and location of design, program, and LSA reviews required.*

103.3.2 Advance notification requirements to the requiring authority of all scheduled reviews.*

Source: https://assist.dla.mil -- Downloaded: 2016-12-05T13:04Z
Check the source to verify that this is the current version before use.

TASK 201

USE STUDY

201.1 PURPOSE. To identify and document the pertinent supportability factors related to the intended use of the new system/equipment.

201.2 TASK DESCRIPTION

201.2.1 Identify and document the pertinent supportability factors related to the intended use of the new system/equipment. Factors to be considered include mobility requirements, deployment scenarios, mission frequency and duration, basing concepts, anticipated service life, interactions with other systems/end items, operational environment, and human capabilities and limitations. Both peacetime and wartime employment shall be considered in identifying the supportability factors. Previously conducted mission area and weapon system analyses which quantified relationships between hardware, mission, and supportability parameters and which are pertinent to the new system/equipment shall be identified and documented.

201.2.2 Document quantitative data resulting from 201.2.1 which must be considered in developing support alternatives and conducting support analyses. This data would include but not be limited to the following:

a. Operating requirements, consisting of the number of missions per unit of time, mission duration, and number of operating days, miles, hours, firings, flights, or cycles per unit of time.

b. Number of systems supported.

c. Transportation factors (e.g., mode, type, quantity to be transported, destinations, transport time and schedule).

d. Allowable maintenance periods.

e. Environmental requirements to include hazardous materials, hazardous waste, and environmental pollutants.

f. Number of operator, maintainer, and support personnel available to support the requirements of the new system.

201.2.3 Conduct field visits to operational units and support activities which most closely represent the planned operational and support environment ment for the new system/equipment.

201.2.4 Prepare a use study report documenting the information developed during performance of 201.2.1, 201.2.2, and 201.2.3. Update the use study report as more detailed information on the intended use of the new system/equipment becomes available.

Source: https://assist.dla.mil -- Downloaded: 2016-12-05T13:04Z
Check the source to verify that this is the current version before use.

201.3 TASK INPUT

201.3.1 Intended mission and use information on the new system/equipment including locations, type of units, depot locations, etc.

201.3.2 Locations for field visits when required. (201.2.3)

201.3.3 Delivery identification of any data item required.

201.3.4 Source documentation available related to the intended use of the new system.

201.3.5 Previously conducted mission area and weapon system analyses which quantified relationships between hardware, mission, and supportability parameters and which are pertinent to the new system/equipment.

201.4 TASK OUTPUT

201.4.1 Pertinent supportability factors related to the intended use of the new system. (201.2.1)

201.4.2 Quantitative data, to include a target audience description, resulting from 201.2.1 which must be considered in conducting support analyses and developing support alternatives. (201.2.2)

201.4.3 Field visit reports. (201.2.3)

201.4.4 Use study report and updates to the report as better information becomes available. (201.2.4)

Source: https://assist.dla.mil -- Downloaded: 2016-12-05T13:04Z
Check the source to verify that this is the current version before use.

TASK 202

MISSION HARDWARE, SOFTWARE, AND SUPPORT SYSTEM STANDARDIZATION

202.1 PURPOSE. To define supportability and supportability related design constraints for the new system/equipment based on existing and planned logistic support resources which have benefits due to cost, manpower, personnel, readiness, or support policy considerations, and to provide input into mission hardware and software standardization efforts.

202.2 TASK DESCRIPTION

202.2.1 Identify existing and planned logistic support resources which have potential benefits for use on each system/equipment concept under consideration. All elements of ILS shall be considered. Define in quantitative terms supportability and supportability related design constraints for those items which should become program constraints due to cost, manpower, personnel, readiness, or support policy considerations and benefits.

202.2.2 Provide supportability, cost, and readiness related information into mission hardware and software standardization efforts. This input shall be provided to a level commensurate with the level of mission hardware and software standardization being pursued.

202.2.3 Identify recommended mission hardware and software standardization approaches which have utility due to cost,readiness, or supportability considerations and participate in the system/equipment standardization effort. This task shall be performed to a level of indenture commensurate with the design development.

202.2.4 Identify any risks associated with each constraint established. For example, known or projected scarcities, and developmental logistic support resources would represent possible risk areas when establishing standardization constraints.

202.3 TASK INPUT

202.3.1 Mandatory supportability and supportability related design constraints for the new system/equipment due to standardization requirements. These would include any standardization and interoperability (S&I) constraints.

202.3.2 Information available from the requiring authority relative to existing and planned logistic support resources to include a target audience description.

202.3.3 Mandatory mission hardware and software standardization requirements.

202.3.4 Delivery identification of any data item required.

202.3.5 Alternative system concepts under consideration.

202.3.6 Use study results from Task 201.

Source: https://assist.dla.mil -- Downloaded: 2016-12-05T13:04Z
Check the source to verify that this is the current version before use.

202.4 TASK OUTPUT

202.4.1 Quantitative supportability and supportability related design constraints for the new system/equipment based upon support standardization considerations.
(202.2.1)

202.4.2 Supportability, cost, and readiness characteristics of mission hardware and software standardization approaches under consider ation.
(202.2.2)

202.4.3 Recommended mission hardware and software standardization approaches which have utility due to cost, readiness, or supportability considerations.
(202.2.3)

202.4.4 Documented risks associated with each constraint established.
(202.2.4)

Source: https://assist.dla.mil -- Downloaded: 2016-12-05T13:04Z
Check the source to verify that this is the current version before use.

TASK 203

COMPARATIVE ANALYSIS

203.1 PURPOSE. To select or develop a Baseline Comparison System (BCS) representing characteristics of the new system/equipment for (1) projecting supportability related parameters, making judgments concerning the feasibility of the new system/equipment supportability parameters, and identifying targets for improvement, and (2) determining the supportability, cost, and readiness drivers of the new system/equipment.

203.2 TASK DESCRIPTION

203.2.1 Identify existing systems and subsystems (hardware, operational, and support) useful for comparative purposes with new system/equipment alternatives. Different existing systems shall be identified when new system/equipment alternatives vary significantly in design, operation, or support concepts, or where different existing systems are required to adequately compare all parameters of interest.

203.2.2 Select or develop a BCS for use in comparative analyses and identifying supportability, cost, and readiness drivers of each significantly different new system/equipment alternative. A BCS may be developed using a composite of elements from different existing systems when a composite most closely represents the design, operation, and support characteristics of a new system/equipment alternative. Different BCS's or composites may be useful for comparing different parameters of interest. Previously developed BCS's shall be assessed to determine the extent to which they can fill the need for the new system/equipment.

203.2.3 Determine the O&S costs, logistic support resource requirements, reliability and maintainability (R&M) values, and readiness values of the comparative systems identified. Identify these values at the system and subsystem level for each BCS established. Values shall be adjusted to account for differences between the comparative system's use profile and the new system/equipment's use profile where appropriate.

203.2.4 Identify qualitative environmental, health-hazard, safety and supportability problems on comparative systems which should be prevented on the new system/equipment.

203.2.5 Determine the supportability, cost, and readiness drivers of each comparative system or BCS. These drivers may come from the design, operating, or support characteristics of the comparative systems and represent drivers for the new system/equipment. For example, repair cycle time may be the prime readiness driver, a particular hardware subsystem may be the prime manpower driver, or energy cost may be the prime cost driver.

Source: https://assist.dla.mil -- Downloaded: 2016-12-05T13:04Z
Check the source to verify that this is the current version before use.

203.2.6 Identify and document any supportability, cost, or readiness drivers for the new system/equipment resulting from subsystems or equipment in the new system for which there are no comparable subsystems or equipment in comparative systems.

203.2.7 Update the comparative systems, their associated parameters, and the supportability, cost, and readiness drivers as the new system/equipment alternatives become better defined or as better data is obtained on the comparative systems and subsystems.

203.2.8 Identify and document any risks and assumptions associated with the comparative systems, and their associated parameters and drivers, such as a low degree of similarity between the new system/equipment and existing systems or the lack of accurate data on existing systems.

203.3 TASK INPUT

203.3.1 Information available from the requiring authority relative to current operational systems.

203.3.2 Delivery identification of any data item required.

203.3.3 Level of detail required for comparative system descriptions. (203.2.1, 203.2.2)

203.3.4 Description of new system alternatives under consideration.

203.3.5 Use study results from Task 201 (to include the target audience description).

203.3.6 Previously developed BCS's which are relevant to the new system/equipment.

203.4 TASK OUTPUT

203.4.1 Identification of existing systems and subsystems useful for comparative analysis with new system/equipment alternatives. (203.2.1, 203.2.2)

203.4.2 O&S costs, logistic support resource requirements, R&M, and readiness values of the comparative systems and subsystems. (203.2.3)

203.4.3 Identification of qualitative environmental, health hazard, safety and supportability problems on comparative systems which should be prevented on the new system/equipment. This will include identification of operations and maintenance tasks associated with comparative systems which adversely impact system performance due to equipment design and are to be avoided in the design of the new system. (203.2.4)

203.4.4 Supportability, cost, and readiness drivers of the new system/equipment based on comparative systems/equipment. (203.2.5)

Source: https://assist.dla.mil -- Downloaded: 2016-12-05T13:04Z
Check the source to verify that this is the current version before use.

203.4.5 Supportability, cost, and readiness drivers for the new system/equipment resulting from subsystems or equipment in the new system for which there are no comparable subsystems or equipment in comparative systems. (203.2.6)

203.4.6 Updates to comparative system descriptions and their associated parameters. (203.2.7)

203.4.7 Risks and assumptions associated with the use of the comparative systems and subsystems and the parameters established for them. (203.2.8)

Source: https://assist.dla.mil -- Downloaded: 2016-12-05T13:04Z
Check the source to verify that this is the current version before use.

TASK 204

TECHNOLOGICAL OPPORTUNITIES

204.1 PURPOSE. To identify and evaluate design opportunities for improvement of supportability characteristics and requirements in the new system/equipment.

204.2 TASK DESCRIPTION

204.2.1 Establish design technology approaches to achieve supportability improvements on the new system/equipment over existing systems and subsystems. These design approaches shall be established through the following:

a. Identifying technological advancements and other design improvements which can be exploited in the new system/equipment's development and which have the potential for reducing logistic support resource requirements, reducing costs, reducing environmental impact, improving safety, or enhancing system readiness.

b. Estimating the resultant improvements that would be achieved in the supportability, cost, environmental impact, safety, and readiness values.

c. Identifying design improvements to logistic elements (such as support equipment and training devices) that can be applied during the new system/equipment's development to increase the effectiveness of the support system or enhance readiness.

204.2.2 Update the design objectives as new system/equipment alternatives become better defined.

204.2.3 Identify any risks associated with the design objectives established, any development and evaluation approaches needed to verify the improvement potential, and any cost or schedule impacts to implement the potential improvements.

204.3 TASK INPUT

204.3.1 Delivery identification of any data item required.

204.3.2 Information available from the requiring authority relative to technology evaluations and improvements.

204.3.3 Current reliability, maintainability, and support system design approaches for state-of-the-art systems and equipment.

204.3.4 Supportability, cost, and readiness values and drivers for comparative systems from Task 203.

204.3.5 Qualitative supportability problems on existing systems/equipment from Task 203.

Source: https://assist.dla.mil -- Downloaded: 2016-12-05T13:04Z
Check the source to verify that this is the current version before use.

204.4 TASK OUTPUT

204.4.1 Recommended design specifications to achieve improvements on the new system/equipment. (204.2.1)

204.4.2 Updates to the design objectives established as new system/equipment alternatives become better defined. (204.2.2)

204.4.3 Any additional funding requirements, risks associated with the design objectives established, any development and evaluation approaches needed to verify the improvement potential, and any cost or schedule impacts to implement potential improvements. (204.2.3)

Source: https://assist.dla.mil -- Downloaded: 2016-12-05T13:04Z
Check the source to verify that this is the current version before use.

TASK 205

SUPPORTABILITY AND SUPPORTABILITY RELATED DESIGN FACTORS

205.1 PURPOSE. To establish (1) quantitative supportability characteristics resulting from alternative design and operational concepts, and (2) supportability and supportability related design objectives, goals and thresholds, and constraints for the new system/equipment for inclusion in program approval documents, system/equipment specifications, other requirements documents, or contracts as appropriate.

205.2 TASK DESCRIPTION

205.2.1 Identify the quantitative operations and support characteristics resulting from alternative design and operational concepts for the new system/equipment. Operational characteristics shall be expressed in terms of crew size per system, aptitude and skill requirements of each job in the crew, and performance standards for each task. Supportability characteristics shall be expressed in terms of feasible support concepts, estimates of manpower requirements, aptitude and skill requirements for each job associated with the system, performance standards for each task, R&M parameters, system readiness, O&S cost, and logistic support resource requirements. Both peacetime and wartime conditions shall be included.

205.2.2 Conduct sensitivity analysis on the variables associated with the supportability, cost and readiness drivers identified for the new system/equipment.

205.2.3 Identify any hardware or software for which the Government will not or may not have full design rights due to constraints imposed by regulations or laws limiting the information the contractor must furnish because of proprietary or other source control considerations. Include alternatives and cost, schedule and function impacts.

205.2.4 Establish supportability, cost, and readiness objectives for the new system. Identify the risks and uncertainties involved in achieving the objectives established. Identify any risks associated with new technology planned for the new system/equipment.

205.2.5 Establish supportability and supportability related design constraints for the new system/equipment for inclusion in specifications, other requirements documents, or contracts as appropriate. These constraints shall include both quantitative and qualitative constraints. Document the quantitative constraints in the LSAR or equivalent format approved by the requiring authority.

205.2.6 Identify any constraints that preclude adoption of a NATO system/equipment to satisfy the mission need.

205.2.7 Update the supportability, cost, and readiness objectives and establish goals and thresholds as new system/equipment alternatives become better defined.

Source: https://assist.dla.mil -- Downloaded: 2016-12-05T13:04Z
Check the source to verify that this is the current version before use.

TASK 301
FUNCTIONAL REQUIREMENTS IDENTIFICATION

301.1 PURPOSE. To identify the operations, maintenance, and support functions that must be performed in the intended environment for each system/equipment alternative under consideration and then to identify the human performance requirements for operations, maintenance and support and to document those requirements in a task inventory.

301.2 TASK DESCRIPTION

301.2.1 Identify and document the functions that must be performed for the new system/equipment to be operated and maintained in its intended operational environment for each design alternative under consideration. These functions shall be identified to a level commensurate with design and operational scenario development, and shall include both peacetime and wartime functions. Identify hazards, including hazardous material, hazardous waste, and environmental pollutants associated with those functions identified.

301.2.2 Identify those functional requirements which are unique to the new system/equipment due to new design technology or operational concepts, or which are supportability, cost, or readiness drivers. Identify hazards, including hazardous material, hazardous waste, and environmental pollutants associated with those functions identified.

301.2.3 Identify any risks involved in satisfying the functional requirements of the new system/equipment.

301.2.4 A task inventory shall be prepared for the new military system/equipment or facility being acquired. This task inventory shall identify all tasks that operators, maintainers, or support personnel must perform with regard to the new system/equipment under development based on the mission analysis, scenarios/conditions and the identified functional requirements (i.e. functional analysis). Tasks shall be identified to a taxonic level commensurate with design and operational scenario development. The task inventory shall be organized in terms of a task taxonomy which defines mission, scenario/conditions, function, job, duty, task, subtask and task elements, as defined in the glossary. The task inventory shall be composed of task descriptions, each of which consists of:

a. An action verb which identifies what is to be accomplished in the task.

b. An object which identifies what is to be acted upon in the task.

c. Qualifying phrases needed to distinguish the task from related or similar tasks.

Task descriptions shall be clear, concise, relevant, and written in operator or maintainer language. Hazardous materials, generation of waste, release of air and water pollutants, and environmental impacts associated

Source: https://assist.dla.mil -- Downloaded: 2016-12-05T13:04Z
Check the source to verify that this is the current version before use.

with each task shall be identified. Where the same task appears in the duty of more than one job and is therefore identified as a collective task for training purposes, it will be identified as such within the task inventory. All verbs shall be unambiguously defined within the taxonomy. A list of preferred verbs is provided in MIL-STD-1388-2. Task descriptions may be supplemented by graphical displays or time line charts. Task descriptions shall be limited to information germane to the task, not the qualifications of personnel involved, necessary tools, or job aids. Operations, preventive maintenance, corrective maintenance, and other support tasks such as preparation for operation, post operation, calibration, and transportation shall be identified by the following methods.

301.2.4.1 The results of the failure modes, effects, and criticality analysis (FMECA), or equivalent analysis, shall be analyzed to identify and document corrective maintenance task requirements. The FMECA or equivalent, shall be documented on system/equipment hardware and software and to the indenture level consistent with the design progression and as specified by the requiring authority. The LSAR, or equivalent format approved by the requiring authority, shall be used for the FMECA documentation.

301.2.4.2 Preventive maintenance task requirements shall be identified by conducting a reliability centered maintenance (RCM) analysis in accordance with the detailed guidelines provided by the requiring authority. The RCM analysis shall be based on the FMECA data and documented in the LSAR or equivalent format approved by the requiring authority.

301.2.4.3 Operations, maintenance, and other support tasks shall be identified through analysis of the functional requirements of the new system/equipment taking into account mission analysis, and scenarios/conditions under which the new system/equipment will be operated. The analysis shall examine each system function allocated to personnel and determine what operator or support personnel tasks are involved in the performance of each system function.

301.2.5 Participate in formulating design alternatives to correct design deficiencies uncovered during the identification of functional requirements or operations and maintenance task requirements. Design alternatives which reduce or simplify functions shall be analyzed.

301.2.6 Update the functional requirements and operations and maintenance task requirements as the new system/equipment becomes better defined and better data becomes available.

301.3 <u>TASK INPUT</u>

301.3.1 Delivery identification of any data item required.

301.3.2 Detailed RCM procedures and logic to be used in conducting the RCM analysis. (301.2.4)

Source: https://assist.dla.mil -- Downloaded: 2016-12-05T13:04Z
Check the source to verify that this is the current version before use.

301.3.3 Identification of system/equipment hardware and software on which this task will be performed and the indenture levels to which this analysis will be carried.

301.3.4 Identification of the levels of maintenance which will be analyzed during performance of this task to identify functions and tasks.

301.3.5 Any documentation requirements over and above LSAR data such as functional flow diagrams or design recommendation data resulting from the task identification process. (301.2.4, 301.2.5)
301.3.6 Requirement for a FMECA in accordance with MIL-STD-1629. (301.2.4, 301.2.6)

301.3.7 Description of system/equipment concepts under consideration.

301.3.8 Supportability, cost, and readiness drivers from Task 203. (301.2.2)

301.3.9 FMECA results. (301.2.4, 301.2.6)

301.3.10 Use study results from Task 201.

301.4 TASK OUTPUT

301.4.1 Documented functional requirements for new system/equipment alternatives in both peacetime and wartime environments. (301.2.1)

301.4.2 Identification of those functional requirements which are unique to the new system/equipment or which are supportability, cost, or readiness drivers. (301.2.2)

301.4.3 Identification of any risks involved in satisfying the functional requirements of the new system/equipment. (301.2.3)

301.4.4 A task inventory documented in the LSAR, or equivalent format approved by the requiring authority, identifying task requirements, to include task descriptions, on system hardware and software and to the indenture levels specified by the requiring authority. (301.2.4)

301.4.5 Identification of design deficiencies requiring redesign as a result of the functional requirements and operations and maintenance task identification process. (301.2.5)

301.4.6 Updates to the identified functional requirements and operations and maintenance task requirements as the new system/equipment becomes better defined and better data becomes available. (301.2.6)

Source: https://assist.dla.mil -- Downloaded: 2016-12-05T13:04Z
Check the source to verify that this is the current version before use.

TASK 302

SUPPORT SYSTEM ALTERNATIVES

302.1 PURPOSE. To establish viable support system alternatives for the new system/equipment for evaluation, tradeoff analysis, and determination of the best system for development.

302.2 TASK DESCRIPTION

302.2.1 Develop and document viable alternative system level support concepts for the new system/equipment alternatives which satisfy the functional requirements of the new system/equipment within the established supportability and supportability related design constraints. Each alternative support concept shall be developed to a level of detail commensurate with the hardware, software, and operational concept development, and shall address all elements of ILS. The same support concept may be applicable to multiple new system/equipment design and operational alternatives. Support concept alternatives shall be prepared to equivalent levels of detail to the degree possible for use in the evaluation and tradeoff of the alternatives. The range of support alternatives considered shall not be restricted to existing standard support concepts but shall include identification of innovative concepts which could improve system readiness, optimize manpower and personnel requirements, or reduce O&S costs. Contractor logistic support (total, in part, or on an interim basis) shall be considered in formulating alternative support concepts.

302.2.2 Update the alternative support concepts as system tradeoffs are conducted and new system/equipment alternatives become better defined. Alternative support concepts shall be documented at the system and subsystem level, and shall address the supportability, cost, and readiness drivers and the unique functional requirements of the new system/equipment.

302.2.3 Develop and document viable alternative support plans for the new system/equipment to a level of detail commensurate with the hardware, software, and operational scenario development.

302.2.4 Update and refine the alternative support plans as tradeoffs are conducted and the new system/equipment's design and operational scenario become better defined.

302.2.5 Identify risks associated with each support system alternative formulated.

302.3 TASK INPUT

302.3.1 Delivery identification of any data item required.

302.3.2 Functional requirements for system/equipment alternatives under consideration from Task 301.

Source: https://assist.dla.mil -- Downloaded: 2016-12-05 15:04Z
Check the source to verify that this is the current version before use.

303.2.2 Conduct evaluations and tradeoffs between the support system alternatives identified for each system/equipment alternative (Task 302). For the selected support system alternative(s), identify and document any new or critical logistic support resource requirements. Any restructured personnel job classification shall be identified as a new resource.

303.2.3 Conduct evaluations and tradeoffs between design, operations, and support concepts under consideration.

303.2.4 Evaluate the sensitivity of system readiness parameters to variations in key design and support parameters such as R&M, spares budgets, resupply time, and manpower and personnel skill availability.

303.2.5 Estimate and evaluate the manpower and personnel implications of alternative system/equipment concepts in terms of total numbers of personnel required, job classifications, skill levels, and experience required. This analysis shall include organizational overhead requirements, error rates, and training requirements.

303.2.6 Conduct evaluations and tradeoffs between design, operations, training, and personnel job design to determine the optimum solution for attaining and maintaining the required proficiency of operating and support personnel. Training evaluations and tradesshall be conducted and shall consider shifting of job duties between job classifications, alternative technical publications concepts, and alternative mixes of formal training, on-the-job training, unit training, and use of training simulators.

303.2.7 Conduct repair level analyses (RLA) commensurate with the level of design, operation, and support data available.

303.2.8 Evaluate alternative diagnostic concepts to include varying degrees of built-in-test (BIT), off-line-test, manual testing, automatic testing, diagnostic connecting points for testing, and identify the optimum diagnostic concept for each system/equipment alternative under consideration.

303.2.9 Conduct comparative evaluations between the supportability, cost, and readiness parameters of the new system/equipment and existing comparative systems/equipment. Assess the risks involved in achieving the supportability, cost, and readiness objectives for the new system/equipment based upon the degree of growth over existing systems/equipment.

303.2.10 Conduct evaluations and tradeoffs between system/equipment alternatives and energy requirements. Identify the petroleum, oil, and lubricant (POL) requirements for each system/equipment alternative under consideration and conduct sensitivity analyses on POL costs.

Source: https://assist.dla.mil -- Downloaded: 2016-12-05T13:04Z
Check the source to verify that this is the current version before use.

303.2.11 Conduct evaluations and tradeoffs between system/equipment alternatives and survivability and battle damage repair characteristics in a combat environment.

303.2.12 Conduct evaluations and tradeoffs between system/equipment alternatives and transportability requirements. Identify the transportability requirements for each alternative under consideration and the limiting constraints, characteristics, and environments on each of the modes of transportation.

303.2.13 Conduct evaluations and tradeoffs between system/equipment alternatives and support facilities (including power/utilities and pavements) requirements. Identify the facility requirements for each support system alternative under consideration and the limiting constraints, characteristics, and environment on each type of facility.

303.3 TASK INPUT

303.3.1 Delivery identification of any data item required.*

303.3.2 Method of review and approval of identified evaluations and tradeoffs to be performed, evaluation criteria, analytical relationships and models to be used, analysis results, and the sensitivity analyses to be performed.*

303.3.3 Specific evaluations, tradeoffs, or sensitivity analyses to be performed, if applicable.*

303.3.4 Specific analytical relationships or models to be used, if applicable.*

303.3.5 Any limits (numbers or skills) to operator or support personnel for the new system/equipment.*

303.3.6 Manpower and personnel costs for use in appropriate tradeoffs and evaluations which include costs related to recruitment, training, retention, development, and washout rates.* (303.2.2, 303.2.5, 303.2.6)

303.3.7 Support alternatives for the new system/equipment from Task 302.

303.3.8 Description of system/equipment alternatives under consideration.

303.3.9 Supportability and supportability related design objectives, goals and thresholds, and constraints for the new system/equipment from Task 205.

303.3.10 Historical CER/PER that exist which are applicable to the new system/equipment.

303.3.11 Job and task inventory for applicable personnel job classifications. (303.2.2, 303.2.5, 303.2.6)

303.3.12 The results of the human engineering task performance analysis, prepared in accordance with MIL-STD-1478. (303.2.3, 303.2.4, 303.2.5, 303.2.6)

Source: https://assist.dla.mil - Downloaded: 2016-12-05T13:04Z
Check the source to verify that this is the current version before use.

TASK 401
TASK ANALYSIS

401.1 PURPOSE. To analyaze required operations and maintenance tasks for the new system/equipment to:

a. Identify logistics support resource requirements for each task.

b. Identify new or critical logistic support resource requirements.

c. Identify transportability requirements.

d. Identify support requirements which exceed established goals, thresholds, or constraints.

e. Provide data to support participation in the development of design alternatives to reduce O&S costs, optimize logistic support resource requirements, or enhance readiness.

f. Provide spirce data for preperation of required ILS documents (technical manuals, training programs, manpower and personnel lists, etc).

401.2 TASK DESCRIPTION

401.2.1 Conduct a detailed analysis of each operation, maintenance and support task contained in the task inventory (Task 301) and determine the following:

a. Logistic support resources required (considering all ILS elements) to perform the task.

b. Task frequency, task interval, elapsed time, and manhours in the system/equipment's intended operational environment and based on the specified annual operating base.

c. Maintenance level assignement based on the established support plan (Task 303).

d. Environmental impact of the tasks including use of hazardous materials, generation of hazardous waste, and release of air and water pollutants.

401.2.2 Document the results of Task 401.2.1 in the LSAR or equivelent format approved by the requiring authority.

401.2.3 Identify new or critical logistic support resources required to perform each task, and hazardous materials, hazardous waste, and environmental impact requirements associated with these resources. New resources are those which require development to operate or maintain the new syhstem/equipment. These can include support and test equiepment, facilieties, new or or special transportation syustems, new computer resources, and nedw repair, test, or inspection techniques or procedures to support new design plans or technoloty. Critical resources are those which

Source: https://assist.dla.mil -- Downloaded: 2016-12-05T13:04Z
Check the source to verify that this is the current version before use.

are not new but require special management attention due to schedule constraints, soct-implication, or known scarcities. Unless otherwise required, document new and modified lostic support resources in the LSAR or equivalent documentation approved by the requireing authroity, to provide a description and justification for the resource requirement.

401.2.4 Based on the human performance tasks stated in the task inventory and the description of the likely personnel aptitudes available, identify training requirements and provide recommendeations concerning the most cost-effective mode of training (e.g. formal classroom, on-the-job).

401.2.5 Analyze the total logistic support resource requirements for each task and determine which tasks fail to meet established supportability or supportability related design goals or constraints for the new system/equipment. Identify tasks which can be optimized or simplified to reduce O&S costs, optimize logistic support resource requirements, reduce environmental impact including use of hazardous materials, generation of hazardous waste, release of air and water pollutants, and environmental impact, or enhance readiness. (rolpose aleternative designs and participate in the development of alternative approaches to optimize and simplify tasks or to bring task requirements within acceptable levels.

401.2.6 Based on the identified new or critical logistic support resources, determine what management actions can be taken to minimize the risks associated with each new or critical resource. These actions could include development of detailed tracking procedures, or schedule and budget modifications.

401.2.7 Conduct a transportability analysis on the system/equipment and any sections thereof when sectionalization is required for transport. When the general requirements of MIL-STD-1366 limitations ar eexceeded, document the transportability engineering characteristics in the LSAR, or equivalent format approved by the requiring authority. Participate in the development of design alternatives when transportability problem areas are surfaced.

401.2.8 For those support resources requiring initial provisioning, document the provisioning technical documentation in the LSAR, or equivalent format approved by the requiring authority.

401.2.9 Validate the key information documented in the LSAR through performance of operations and maintenance tasks on prototype equipment. This validation shall be conducted using the procedures and resources identified during the performance of 401.2.1 and updates shall be made where required. Validation requirements shall be coordinated with other system engineering demonstrations and tests (e.g., maintainability demonstrations, reliability and durability tests) to optimize validation time and requirements.

401.2.10 Prepare output summaries and reports to satisfy ILS documentation requirements as specified by the requiring authority. These shall include all pertinent data contained in the LSAR at the time of preparation.

401.2.11 Update the data in the LSAR as better information becomes available and as applicable input data from other system engineering programs is updated.

Source: https://assist.dla.mil -- Downloaded: 2016-12-05T13:04Z
Check the source to verify that this is the current version before use.

401.3 TASK INPUT

401.3.1 Identification of system/equipment hardware and software on which this analysis will be performed.

401.3.2 Identification of indenture levels to which this analysis will be carried.

401.3.3 Identification of the levels of maintenance which will be documented during performance of this task.

401.3.4 Known or projected logistic support resource shortages.

401.3.5 Schedule and budget ceilings and targets.

401.3.6 Any supplemental documentation requirements over and above the LSAR data records. (e.g., transportability clearance diagrams, and time lines).

401.3.7 Delivery identification of any data item required.

401.3.8 Information available from the requiring authority relative to:

a. Existing and planned personnel apptitudes (ASVAB scores), skill levels and programs of instruction.

b. Lists of standard support and test equipment.

c. Facilities available.

d. Training devices available.

e. Existing transportation systems and capabilities.

401.3.9 Description of personnel capabilities (target audience) intended to operate and maintain the new system/equipment at each level of maintenance.

401.3.10 Any limits (numbers or skills) to operators or support personnel for the new system/equipment.

401.3.11 Annual operating basis for task frequencies.

401.3.12 Task inventory from Task 301.

401.3.13 Results of human engineering task performance analysis.

401.3.14 Recommended support plan for the system/equipment from Task 303.

401.3.15 Supportability and supportability related design goals and requirements from Task 205.

Source: https://assist.dla.mil -- Downloaded: 2016-12-05T13:04Z
Check the source to verify that this is the current version before use.

401.4 TASK OUTPUT

401.4.1 Completed LSAR data on system/equipment hardware and software and to the indenture level specified by the requiring authority, or equivalent format approved by the requiring authority.

401.4.2 Identification of new or critical logistic support resources required to operate and maintain the new system. (401.2.3)

401.4.3 Alternative design approaches where tasks fail to meet established goals and constraints for the new system/equipment or where the opportunity exists to reduce O&S costs, optimize logistic support resource requirements, or enhance readiness. (401.2.5)

401.4.4 Identification of management actions to minimize the risks associated with each new or critical logistic support resource requirement. (401.2.6)

401.4.5 Validation of key information documented in the LSAR. (401.2.9)

401.4.6 Output summaries and reports as specified by the requiring authority containing all pertinent data contained in the LSAR at the time of preparation. (401.2.10)

401.4.7 Updated LSAR data as better information becomes available and as applicable input data from other system engineering programs is updated. (401.2.11)

Source: https://assist.dla.mil -- Downloaded: 2016-12-05T13:04Z
Check the source to verify that this is the current version before use.

TASK 501

SUPPORTABILITY TEST, EVALUATION, AND VERIFICATION

501.1 PURPOSE. To assess the achievement of specified supportability requirements, identify reasons for deviations from projections, and identify methods of correcting deficiencies and enhancing system readiness.

501.2 TASK DESCRIPTION

501.2.1 Formulate a test and evaluation strategy to assure that specified supportability and supportability related design requirements are achieved, or achievable, for input into system test and evaluation plans. The test and evaluation strategy formulated shall be based upon quantified and supportability requirements for the new system/equipment; the supportability, cost, and readiness drivers; and supportability issues with a high degree of risk associated with them. Tradeoffs shall be conducted between the planned test length and cost and the statistical risks incurred. Potential test program limitations in verifying supportability objectives based on previous test and evaluation experience and the resulting effect on the accuracy of the supportability assessment shall be documented.

501.2.2 Develop a System Support Package (SSP) component list identifying support resources that will be evaluated during logistic demonstration and will be tested/validated during development and operational tests. The component lists will include:

a. Supportability test requirements.

b. Applicable Maintenance Allocation Chart (MAC).

c. Technical publications.

d. Spares and repair parts.

e. Training devices/equipment.

f. Special and common tools.

g. Test, measurement and diagnostic equipment (TMDE).

h. Operations and maintenance manpower/personnel requirements.

i. Training courses.

j. Transportation and materiel handling equipment.

k. Calibration procedures and equipment.

l. Mobile and/or fixed support facilities.

Source: https://assist.dla.mil -- Downloaded: 2016-12-05T13:04Z
Check the source to verify that this is the current version before use.

m. Embedded software requirements.

n. Other support equipment.

501.2.3 Establish and document test and evaluation program objectives and criteria and identify test resources, procedures, and schedules required to meet the objectives for inclusion in the coordinated test program and test and evaluation plans. The objectives and criteria established shall provide the basis for assuring that critical supportability issues and requirements have been resolved or achieved within acceptable confidence levels.

501.2.4 Analyze the test results and verify/assess the achievement of specified supportability requirements for the new system/equipment. Determine the extent of improvement required in supportability and supportability related design parameters in order for the system/equipment to meet established goals and thresholds. Identify any areas where established goals or thresholds have not been demonstrated within acceptable confidence levels. Do not duplicate analyses performed in Task 303. Develop corrections for support ability problems uncovered during test and evaluation. These could include modifications to hardware, software, support plans, logistic support resources, or operational tactics. Update the documented support plan and logistic support resource requirements as contained in the LSAR and LSAR output reports based on the test results. Quantify the effects of these updates on the projected cost, readiness, and logistic support resource parameters for the new system/equipment.

501.2.5 Analyze standard reporting systems to determine the amount and accuracy of supportability information that will be obtained on the new system/equipment in its operational environment. Identify any shortfalls in measuring accomplishment against the supportability goals that were established for the new system/equipment, or in verifying supportability factors which were not tested during the acquisition phases of the item's life cycle. Develop viable plans for obtaining required supportability data from the field which will not be obtained through standard reporting systems. Conduct tradeoff analyses between cost, length of data collection, number of operational units in which to collect data, and statistical accuracy to identify the best data collection plan. Document the data collection plan selected to include details concerning cost, duration, method of data collection, operational units, predicted accuracy, and intended use of the data.

501.2.6 Analyze supportability data as it becomes available from standard supply, maintenance, and readiness reporting systems and from any special data collection programs implemented on the new system/equipment. Verify achievement of the goals and thresholds established for the new system/equipment. In those cases where operational results deviate from projections, determine causes and corrective actions. Analyze feedback information and identify areas where improvements can be cost effectively accomplished. Document recommended improvements.

Source: https://assist.dla.mil -- Downloaded: 2016-12-05T13:04Z
Check the source to verify that this is the current version before use.

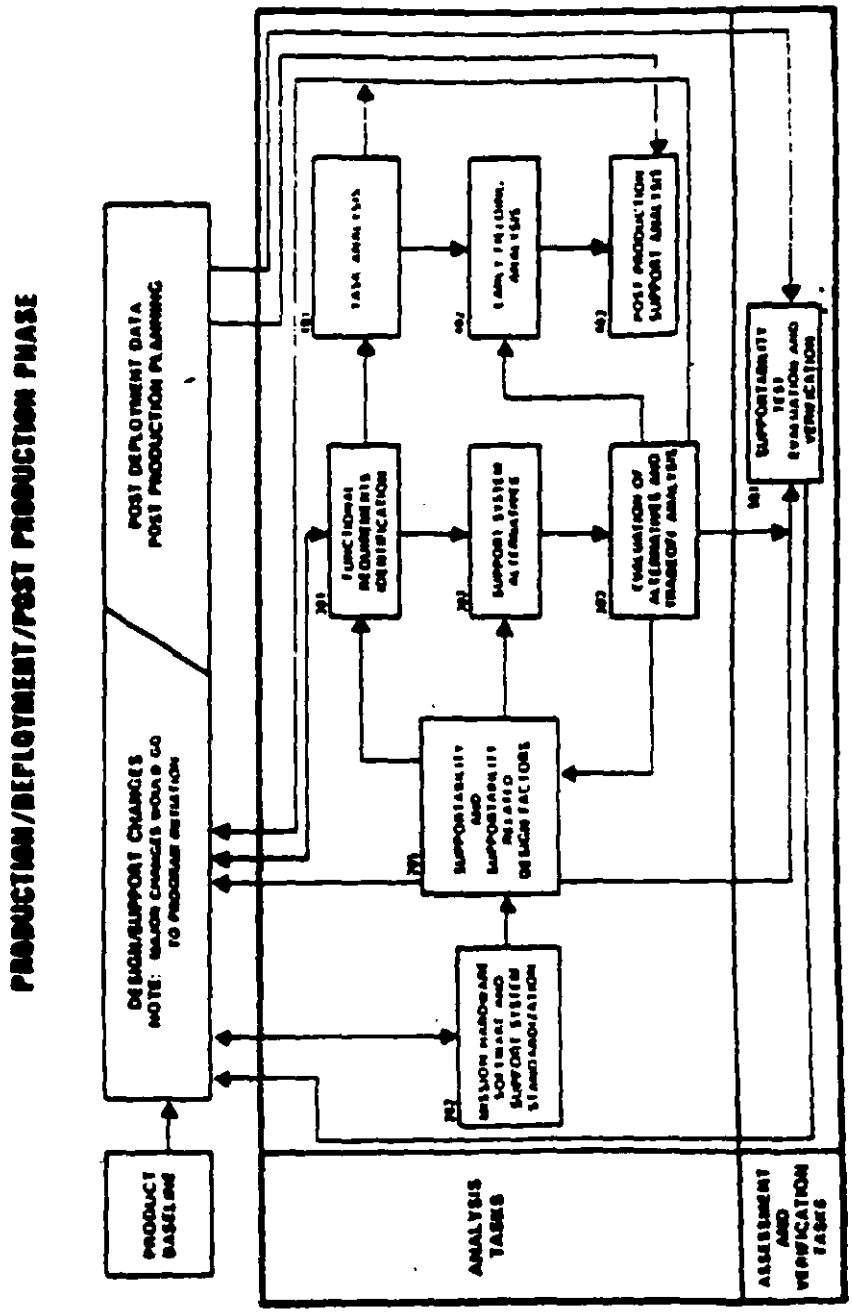

FIGURE 2. Logistic Support Analysis Process Flow Chart

Reprinted without change

Source: https://assist.dla.mil -- Downloaded: 2016-12-05T13:04Z
Check the source to verify that this is the current version before use.

APPENDIX A
APPLICATION GUIDANCE FOR IMPLEMENTATION OF LOGISTIC SUPPORT ANALYSIS PROGRAM REQUIREMENTS

10. SCOPE

10.1 General. This appendix provides rationale and guidance for the selection and tailoring of LSA tasks in this standard. This appendix is to be used to tailor LSA requirements in the most cost effective manner to meet program objectives. However, it is not to be referenced or implemented in contractual documents. No requirements are contained in this appendix. The users of this appendix may include the Department of Defense contracting activity, Government in-house activity, and prime contractor or subcontractor, who wishes to impose LSA tasks upon a supplier.

10.2 How to Use this Appendix. This appendix provides guidance on structuring LSA programs (paragraph 40) and on applying the individual task and subtask requirements (paragraph 50). The user should first review the major considerations affecting the development of the LSA program contained in paragraph 40 and then refer to the appropriate parts of paragraph 50 based on the tasks and subtasks selected.

20. REFERENCED DOCUMENTS

Military Standards

MIL-STD-680	Contractor Standardization Program Requirements.
MIL-STD-965	Parts Control Program.
MIL-STD-1629	Procedures for Performing a Failure Mode, Effects, and Criticality Analysis.
MIL-STD-1388-2	DOD Requirements for a Logistic Support Analysis Record

DoD Directives

DoDD 5000.1	Defense Acquisition

DoD Instructions

DoDI 5000.2	Defense Acquisition Management Policies and Procedures

Source: https://assist.dla.mil -- Downloaded: 2016-12-05T13:04Z
Check the source to verify that this is the current version before use.

30. DEFINITIONS

30.1 General. Key terms used in this appendix are defined in the Glossary, Appendix B.

40. GENERAL APPLICATION GUIDANCE FOR LOGISTIC SUPPORT ANALYSIS PROGRAM

40.1 LSA Process. LSA is an interative and multidisciplinary activity with many interfaces. The LSA process can be divided into two general parts: (a) analysis of supportability, and (b) assessment and verification of supportability. The iterative nature of this process and the input-output relationship of the interfaces change with the acquisition phases as described below.

40.1.1 Analysis of Supportability. This portion of the LSA process commences at the system level to affect design and operational concepts; identify gross logistic support resource requirements of alternative concepts; and to relate design, operational, and supportability characteristics to system readiness objectives and goals. The system level analysis is characterized by use studies, comparative analysis and driver identification, identification of technological opportunities, and tradeoffs between support, operational, and design concepts and between alternative support concepts such as organic versus contractor support, built-in versus external test capability, and varying numbers of maintenance levels. Once system level tradeoffs are made, the analysis shifts to lower system indentures and toward support system optimization within the framework established by the system level analysis. This analysis defines the logistic support resouce requirements of the system through an integrated analysis of all operator and maintenance functions and tasks to determine task frequencies, task times, personnel and skill requirements, supply support requirements, etc., to include all elements of ILS. Optimization is achieved at this level through allocation of functions and tasks to specific maintenance levels, repair versus discard analyses, RCM analyses, and formulating design recommendations to optimize maintenance times and logistic support resource requirements. Data from this level of the LSA is used as direct input into the development of data products associated with each ILS element such as provisioning lists, personnel and training requirements, and technical manuals. This assures compatibility between ILS element documents and permits common use of data which apply to more than one logistic element.

40.1.2 Assessment and Verification. This part of the LSA process is conducted throughout the system/equipment's life cycle to demonstrate, within stated confidence levels, the validity of the analysis and products developed from the analysis, and to adjust the analysis results and products as required. This part of the process starts with early planning for verification of support concepts and continues through development, acquisition, deployment, and operations to include assessment and verification of post deployment support.

Source: https://assist.dla.mil -- Downloaded: 2016-12-05T13:04Z
Check the source to verify that this is the current version before use.

40.1.3 Interfaces. Some of the major LSA activities where interfaces play a key role are listed below along with the interfacing activities:

a. Comparative Analysis (Task 203). Interfacing activities-human engineering, reliability, maintainability, safety, design engineers and ILS element managers.

b. Functional Requirements Identification (Task 301). Interfacing activities-design engineering, reliability, maintainability, human engineering, safety and ILS element managers.

c. Tradeoff Analysis (Task 303). Interfacing activities - design engineering, reliability, maintainability, safety, human engineering, cost estimating, and ILS element managers.

d. Task Analysis (Task 401). Interfacing activities-reliability, maintainability, human engineering, and safety.

e. Resource Requirements Identification (Task 401). Interfacing activities - design engineering, human engineering, and ILS element managers.

Coordination of these interfaces is a major management challenge which requires final resolution at the working level in some cases. The subtasks in this standard are structured to facilitate assignment of applicable subtasks to the community most directly involved without loss of overall task integrity. For a specific acquisition program, LSA interfaces will be described in the LSAP (Task 102) which should be reviewed to assure that input-output relationships, responsibilities, and timing of activities are properly addressed to prevent overlap and duplication. The following general guidance may be useful in addressing the interface problem.

40.1.3.1 Inputs and Outputs for System Level LSA. Some of the system level LSA involves system analysis/engineering at the hardware-operating-support trade level (Subtask 303.2.3). System level LSA is an input to and subset of these trades and is in turn a collection, synthesis, and "system" analysis of inputs from various specialized areas. Figure 4 shows some of these major relationships in input-output form. The outputs from the system level LSA impact the interfacing activities in that they constitute boundary conditions or goals for specialized engineering programs and ILS element concepts and plans.

40.1.3.2 Refinement and Extension of the System Level LSA. As development progresses, the LSA is iterated and extended to lower indenture levels with the input-output concept described above still functioning. Boundary conditions, constraints, and objectives are refined and expanded based on inputs from specialized engineering and ILS element areas. Additionally, the support system is optimized within the boundaries and objectives established. Specific subtask tradeoffs within engineering specialities and ILS elements are conducted to provide specific boundaries for follow-on

Source: https://assist.dla.mil -- Downloaded: 2016-12-05T13:04Z
Check the source to verify that this is the current version before use.

Reprinted without change

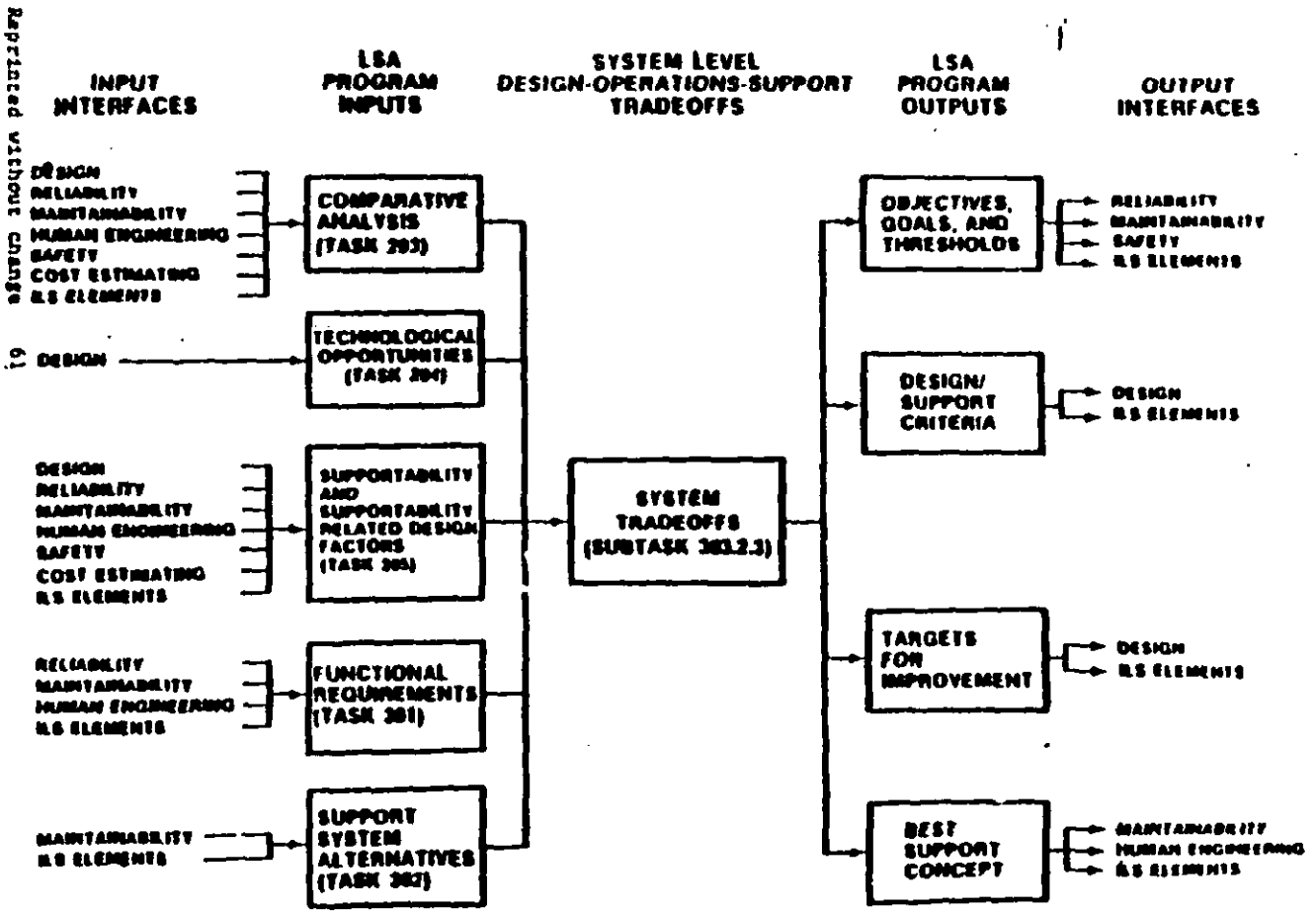

FIGURE 4. System Level Logistic Support Analysis Interfaces.

Source: https://assist.dla.mil -- Downloaded: 2016-12-05T13:04Z
Check the source to verify that this is the current version before use.

40.1.3.3 Task Analysis Interfaces. LSA is structured to serve an integrating function in providing source data for engineering and functional specialties regarding operator, maintainer and support personnel task requirements. This source data is intended to serve as input to the analytical requirements of these specialties, and as prescribed in the related military standards (i.e. MIL-STD 1478, MIL-STD 882, MIL-STD 1379, etc).

40.1.3.4 Resource Requirements Identification. This step in the LSA process involves identification of all logistic support resource requirements. This identification involves many inputs from design and specialized engineering areas and all resource requirements are summarized in the LSA data base. These requirements are then fed to the various ILS element managers for their use in further development of management plans and products for individual ILS elements.

40.2 Major Criteria. Major system acquisition and ILS policies are contained in DOD Instruction 5000.2. The four prime factors that govern system acquisition programs are cost, schedule, performance, and supportability. The LSA process provides direct input into the supportability and cost factors associated with a system/equipment and, therefore, provides significant input into system/equipment decisions. While specific criteria and emphasis will vary from one acquisition to another, three prime issues have emerged at the system level which affect acquisition decisions and which are outputs of the LSA process. These are described below.

40.2.1 Manpower and Personnel Constraints. Demographics indicate the current problems with manpower and personnel shortages (both in terms of quantity, aptitudes, and skill level) will continue for the next decade or more. The problem is of such magnitude that it must be approached through the design process as well as the more traditional manpower and personnel approaches of Services. New system/equipment manpower quantities and skill level demands must be managed like other major design parameters, such as performance and weight, beginning with the earliest conceptions of the new system/equipment. LSA efforts will be planned to meet the manpower estimating requirements in support of the milestone decision process.

40.2.2 System Readiness. Logistic related design parameters (such as R&M), logistic support resources (such as spares and manpower), and logistic system parameters (such as resupply time) must be related to system readiness objectives and goals. Such objectives may vary from system to system, and from peacetime to wartime. Operational availability is frequently a good peacetime measure, while operational availability, sortie rates (surge and sustained), and percent coverage are frequently used wartime measures which are key for peacetime readiness and wartime capability. System readiness measures are equal to performance, schedule, and cost as design parameters, and must be managed accordingly beginning with the earliest conception of new systems/equipment.

Source: https://assist.dla.mil -- Downloaded: 2016-12-05T13:04Z
Check the source to verify that this is the current version before use.

40.2.3 Cost. It is necessary to consider support investment and O&S costs, as well as other acquisition costs, in major system acquisitions. Life cycle cost (LCC) estimates compare the investment and support resource requirements for various system alternatives. The cost methodology should explicitly address the resource requirements to achieve specified levels of readiness for given assumptions concerning hardware R&M characteristics, usage rates, and scenarios. Various segments of LCC and O&S costs are vital to proper tradeoff decisions. Cost uncertainty in some areas of resource requirements, such as manpower and energy, is such that sensitivities need to be addressed. Major elements of life cycle costs are to be addressed. The objective is to minimize cost within major constraints such as system readiness objectives.

40.3 Strategy in Developing Analysis Requirements.

40.3.1 General. The key to a productive but cost effective analysis effort is the concentration of available resources on activities which most benefit the program. Such concentration might be called the analysis strategy. This involves the establishment of an analysis program which will evolve achievable supportability and support system objectives. The broad objectives of LSA are to influence hardware design, structure the most effective support concept, and to define logistic support resource requirements. These general objectives must be translated into more specific objectives for individual projects, particularly in early phases when maximum flexibility exists. Objectives are iterated and refined until they become firm program goals or requirements. Development of an analysis strategy is a very difficult task involving a large number of interacting variables. Strategy considerations and the possible impact of these variables must be addressed in the tailoring process. Analysis tasks and subtasks must be tailored and scheduled to meet project decision points. The guidance included here is designed to assist in the tailoring process, however, it is not all inclusive and requires adaptation to specific programs.

40.3.2 Task Selection and Focusing.

40.3.2.1 General. Selection of analysis requirements must take place at the subtask level since the subtasks are generally written for specific phases and types of programs. The rationale for selecting particular subtasks involves a wide range of considerations. Figure 5 portrays a general tailoring logic tree which should be followed in selecting tasks. Table III identifies task and subtask applicability by phase of development and engineering activity. The guidance in Table III may require adjustment for specific acquisition programs since it is based on typical theoretical programs, and since it is not unusual for some aspects of a development program to be in one phase and other aspects in another. The initial selection of tasks and subtasks can be adjusted for the following considerations:

a. The amount of design freedom.
b. Time phasing adjustments if program is "fast track".

Source: https://assist.dla.mil -- Downloaded: 2016-12-05T13:04Z
Check the source to verify that this is the current version before use.

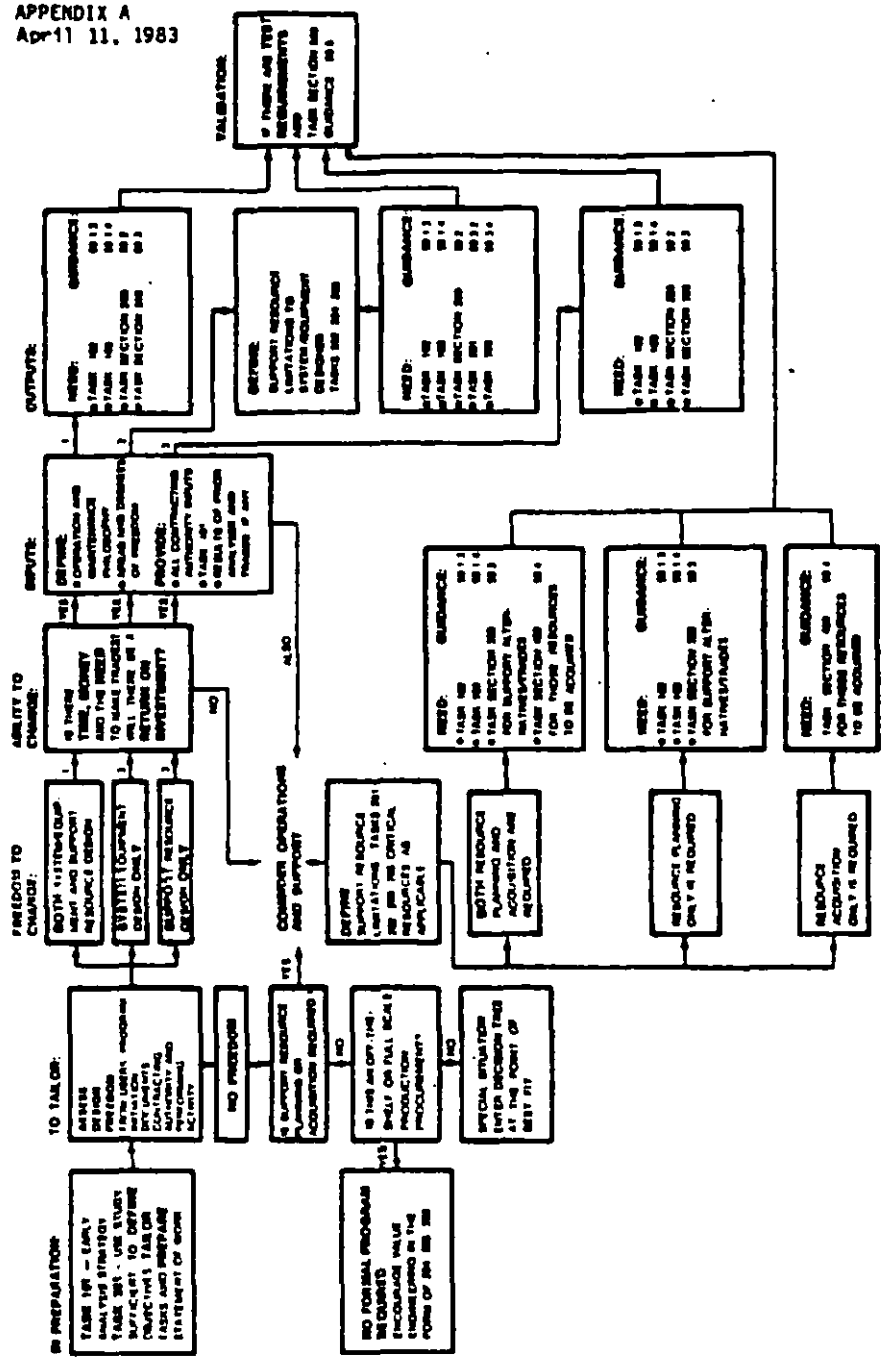

FIGURE 5. Logistic Support Analysis Tailoring Decision Logic.

Reprinted without change

Source: https://assist.dla.mil -- Downloaded: 2016-12-05T13:04Z
Check the source to verify that this is the current version before use.

c. Work already done.

d. Data availability and relevancy.

e. Time and resource availability.

f. Policy directive DODI 5000.2 information needs (see Table II).

g. Desired tasks not in the standard.

h. Procurement considerations.

Additional guidance on these factors is given later in this section. Most of the factors above tend to reduce or restrict the amount of analysis activity. However, selections should be checked against Table II. If the subtasks in Table II are not covered, their feasibility and utility must be assessed. If it is impossible or unwise to do these subtasks, the reasons should be documented and waivers obtained.

40.3.2.2 Focusing. After the initial selection of subtasks is completed, further focusing is needed to concentrate effort in high leverage areas and to specify other requirements. Considerations under focusing should incclude:

a. Modification or restriction of the subtask to significant areas.

b. Specification of subtasks such that they can easily be assigned to the most appropriate community.

c. Specification of models and associated data to be used.

d. Specification of areas or activity requiring requester approval.

The requiring authority should be as specific as possible in defining analysis needs for tasks and subtasks under the task input to be specified. Often 10 to 20 percent of the subsystems control 80 to 90 percent of the support demands. Some Task 303 evaluations and tradeoffs are very general and would benefit from greater specificity to focus on key areas. Models and definitions, particularly for life cycle cost, to be used for a particular analysis should be specified, if possible, especially if there is competition. Model considerations are discussed in greater depth under procurement considerations. The remainder of this section discusses the specific impact of the various factors to be considered in the development of the LSA strategy.

Supersedes page 65 of 11 April 1983

Source: https://assist.dla.mil -- Downloaded: 2016-12-05T13:04Z
Check the source to verify that this is the current version before use.

40.3.3 Factors Impacting on Strategy.

40.3.3.1 Type of Program/Change. Program categories include a new program, product improvement program, or "off-the-shelf" program. It is not unusual for programs to be restructured. Major modifications may require a redo or new approach to some of the analysis work already done. The type of program impacts objectives and subtask selection and focusing. On a product improvement program, potential analysis objectives might focus on (1) support risks on the changed part of the system/equipment and (2) opportunities for improvement on the total system/equipment through improvement in supportability characteristics. New or high technology efforts imply increased risk in attainment of supportability goals, and the consequent need for activity to reduce these risks. Modernization using previously proven technology has less risks of goal attainment and may offer more opportunity to reduce logistic support burdens through use of newer (but not necessarily high risk) technology. Such considerations can obviously impact preliminary objective determination. System versus equipment considerations can impact subtask selection and focusing. For example, a more limited and focused readiness analysis may be more appropriate for an equipment contract. Additionally, alternative support concepts may be more limited for equipment level contracts due to a fixed system support concept. System readiness objectives may be to "hold the line" or they may be more ambitious. Readiness goals must be a primary management focus beginning with program initiation. If such goals are ambitious, one focus of the early analyses should be toward readiness related system design and support objectives, such as reliability and turnaround time. Systems and equipments which have large support personnel demands or which have high O&S costs obviously present greater investment opportunities for improvement than those with low demands or costs and, therefore, should receive greater consideration in selecting preliminary analysis objectives.

40.3.3.2 Amount of Design Freedom. The amount of design freedom is a key consideration in subtask selection. Design freedom is related to program considerations such as phasing. The objective of most of the front end analysis subtasks is to influence selection of design characteristics to achieve improvements in readiness, supportability, and cost. If the design is fixed, there may be little benefit from doing these tasks. Some of the factors listed in paragraph 40.3.3.1 give clues in this regard. Product improvement might limit design freedom to specific subsystems unless areas of no or minor change are open to redesign opportunity to reduce logistic support burdens. Fast track programs tend to move up or back various possible analysis subtasks, but fast track programs also tend to use existing technology and plan on preplanned product improvement rather than employ new technology. The point of design freedom thus shifts. Design freedom may exist for the support system but not the mission system. LSA effort and objectives should be focused accordingly. The LSA objective of causing supportability requirements to be an integral part of system/equipment requirements

Source: https://assist.dla.mil -- Downloaded: 2016-12-05T13:04Z
Check the source to verify that this is the current version before use.

participation from supportability activities as well as the other system engineering disciplines, due to the impacts of standardization on mission performance, reliability, maintainability, safety, quality, and survivability. Standardization approaches will generally be investigated starting in the Concept Phase due to S&I considerations and continue to progressively lower levels of indenture throughout the acquisition program. This effort is normally included as a separate contract requirement and care should be exercised in citing Task 202 (Subtasks 202.2.2 and 202.2.3) in order to avoid duplication of effort. The standardization program can normally provide the required data for Subtasks 202.2.2 and 202.2.3. Additionally, care should be exercised in the performance of this task to assure that standardization requirements are not established on poor performance items or items which can be significantly improved.

50.2.4 Comparative Analysis (Task 203). There are three major purposes for accomplishing Task 203:

a. To define a sound analytical foundation for making projections for new system/equipment parameters and identifying targets of improvement.

b. To identify the supportability, cost, and readiness drivers for the new system/equipment.

c. To identify risks involved in using comparative system data in subsequent analyses.

50.2.4.1 A major key to having an effective LSA program is the efficient analysis and use of the data obtained on comparative systems. This process is also called a historical data review. It involves making good use of experience information available from other systems/equipment so that the new system/equipment will be an improvement in supportability as well as performance. When a realistic comparative system can be established, information on the comparative system helps identify the following:

a. High failure rate potential of subsystems and components.

b. Major downtime contributors.

c. Design features which enhance supportability.

d. Potential supportability problem areas to include design features which degrade supportability.

e. Design concepts with potential safety or human factors impacts.

Source: https://assist.dla.mil -- Downloaded: 2016-12-05T13:04Z
Check the source to verify that this is the current version before use.

f. Gross requirements for logistic support resources.

g. Design, operational, and support concepts which drive the logistic support requirements, O&S costs, and achieved readiness levels of the system/equipment.

50.2.4.2 Identifying comparative systems and subsystems and establishing BCS's requires a general knowledge of the design, operational, and support characteristics of the new system/equipment and the type of parameter to be projected. If design parameters (R&M, etc.) are to be projected, then current operational systems/equipment which are similar in design characteristics to the new system/equipment's design characteristics must be identified. If major subsystems have been identified for the new system, the BCS for projecting design parameters may be a composite of subsystems from more than one weapon system. If support parameters (resupply time, turnaround times, transportation times, personnel constraints, etc.) are to be projected, then current systems (support systems) which are similar to the new system/equipment's support concept must be identified. This may be a support system completely different than the one supporting similar systems/equipment in design characteristics.

50.2.4.3 The level of detail required in describing comparative systems will vary depending on the amount of detail known on the new system/equipment's design, operational, and support characteristics and the accuracy required in the estimates for new system/equipment parameters. Comparative systems and subsystems are normally identified by the requiring authority. BCS's should be established at a level commensurate with expected design progression. When the performing activity is a contractor, the level of comparison must be specified, as well as data sources to be used. Task 203 contains two subtasks (203.2.1 and 203.2.2) which are designed to provide for different levels of detail in identifying comparative systems. For example, if the design concept for the new system/equipment is very general, then only a general level comparative system description (Subtask 203.2.1) should be established. When more detail and accuracy are required, then Subtask 203.2.2 should be used. However, as more detail is required the cost of the analysis increases, therefore, the appropriate subtask should be selected accordingly.

50.2.4.4 Assumptions made in establishing a comparative system and associated risks involved play an important role in determining the accuracy of the new system/equipment projections. Low similarity between the new system/equipment's design, operation, or support concept and existing systems should be documented and new system/equipment projections treated accordingly. Additionally, inherent risks are involved in constructing composite comparative systems unless environmental and operational differences are identified and the supportability, cost, and readiness values adjusted accordingly.

Source: https://assist.dla.mil -- Downloaded: 2016-12-05T13:04Z
Check the source to verify that this is the current version before use.

50.2.6.4 When performing Subtask 205.2.5, thorough consideration should be given to possible supportability incentives which may be included in the contract. However, incentives should be at the system level (possibly subsystem for some acquisitions) to prevent optimization approaches at lower levels which do not represent optimum system level solutions. This should not preclude component level initiatives such as reliability improvement warranties (RIW).

50.3 Task Section 300-Preparation and Evaluation of Alternatives.

50.3.1 General Considerations.

50.3.1.1 Iterations. The tasks contained in this section are highly iterative in nature and are applicable in each phase of the life cycle. Additionally, they are generally performed in sequence; that is, functions are identified (Task 301), alternatives are developed to satisfy the functions (Task 302), and evaluations and tradeoffs are conducted (Task 303). This process is then iterated to increasingly lower levels of indenture and detail in the classic system engineering manner.

50.3.1.2 Timing. The identification of functions, development of alternatives, and tradeoff analyses should be conducted to a level of detail and at a time consistent with the design and operational concept development. The determination of level of detail required should be made in coordiantion with representatives from the engineering/functional specialties which will ultilize the resulting data. In the early phases of the life cycle, functions and alternatives should only be developed to the level required to analyze differences and conduct tradeoffs. More detail can be developed after tradeoffs are made and the range of alternatives is narrowed. At the same time, the support plan must be finalized at a time which allows for the development and testing of the necessary ILS element resources to carry out the support plan.

50.3.2 Functional Requirements Identification (Task 301). Identification of the operating and maintenance functions for the new system/equipment must coincide with critical design decisions to assure development of a system which achieves the best balance between cost, schedule, performance, and supportability. Special emphasis should be placed on the functional requirements which are supportability, cost, or readiness drivers for the new system/equipment or which are new functions that must be performed based on new design technology or new operational concepts. Identification of the functions which are drivers provides a basis for developing new support approaches or design concepts to enhance the supportability of the new system/equipment. Identification of the new functional requirements provides the basis for management attention due to the potential supportability risks. Functional flow block diagrams are a useful tool in identifying functional requirements and establishing relationships between functions. Additionally, other system engineering programs provide a significant input to the functional requirements identification process. For example, human

Source: https://assist.dla.mil -- Downloaded: 2016-12-05T13:04Z
Check the source to verify that this is the current version before use.

engineering specialists may be best qualified to identify and analyze operations functions, transportation specialists may be best qualified to identify and analyze transportation requirements, etc. The LSA program under Task 301, consolidates the functional requirements developed by the appropriate specialty areas to assure the support system developed for the new system/equipment satisfies all functional requirements.

50.3.2.1 Task 301 is designed to provide for varying levels of detail from system and subsystem level functions (Subtasks 301.2.1 through 301.2.3) to detailed operations and maintenance tasks requirements (Subtask 301.2.4). Appropriate subtask requirements should be identified based on the level of design definition and schedule requirements. Table III provides general guidelines for the timing of each subtask. In addition, subtask 301.2.4 prescribes the use of a task taxonomy for development of task descriptions. The level of detail to which this taxonomy is met must be based on the level of system/equipment definition and design, scenerio development, and anticipated task criticality.

50.3.2.2 Operations and support task requirements (Subtask 301.2.4) are identified using three analysis techniques: (1) FMECA, (2) an RCM analysis, and (3) a detailed review of the system/equipment functional requirements. The FMECA identifies the failure modes of the system and its components thus identifying the corrective maintenance requirements. The RCM analysis identifies preventive maintenance requirements: (1) to detect and correct incipient failures either before they occur or before they develop into major defects, (2) to reduce the probability of failure, (3) to detect hidden failures that have occurred, or (4) to increase the cost effectiveness of the system/equipment's maintenance program. The review of the system/equipment's functional requirements identifies those tasks which are neither corrective nor preventive but must be performed in order for the system/equipment to operate as intended in its environment. These tasks include operations, turnaround tasks, reloading, mission profile changes, transportation tasks, etc.

50.3.2.3 A FMECA systematically identifies the likely modes of failure, the possible effects of each failure, and the criticality of each effect on mission completion, safety, or some other outcome of significance. The FMECA requirements will generally be included under the Reliability Program, however, FMECA requirements for a system must be developed in conjunction with the LSA program requirements due to the necessity of having FMECA results to conduct some LSA tasks. In particular, the FMECA provides the basis for built-in and external test specification and evaluation. This coordination should consider the timing of the FMECA, level of detail, and documentation requirements.

50.3.2.4 RCM analysis consists of a systematic approach of analyzing system/equipment reliability and safety data to determine the feasibility and desirability of preventive maintenance tasks, to highlight maintenance problem areas for design review consideration, and to establish the most

Source: https://assist.dla.mil Downloaded: 2016-12-05T13:04Z
Check the source to verify that this is the current version before use.

effective preventive maintenance program for the new system/equipment. RCM logic is applied to the individual failure modes of each reparable item in the system/equipment identified during the FMECA, through a progressive determination of how impending failures can be detected and corrected in order to preserve, to the degree possible, the inherent levels of reliability and safety in the system/equipment.

50.3.2.5 Task requirements to satisfy the system/equipment's functional requirements which are not identified during the FMECA and RCM analysis are generally system level tasks. These tasks must be analyzed relatively early in the life cycle (Demonstration and Validation Phase) so that the system/equipment's design can be appropriately defined to preclude supportability problems. These tasks are often constrained by system/equipment requirements (e.g., mission response or turnaround time cannot exceed a certain value or the system must be transportable via a given mode) and the detailed task analysis must be conducted in a timely fashion so that design corrections can be made when the requirements are exceeded.

50.3.3 Support System Alternatives (Task 302). Support alternatives for a new system/equipment must cover each element of ILS, and satisfy all functional requirements. Initial support alternatives will be system level support concepts which address the supportability, cost, and readiness drivers and the unique functional requirements of the new system. After tradeoff and evaluation of these alternatives (Task 303), alternatives will be formulated at a lower level for further tradeoffs and evaluations. Conducting this analysis in an iterative fashion from the top down helps assure efficient use of resources in conducting the LSA. Support alternatives should be formulated to equivalent levels of detail for tradeoffs and evaluation, and then further detail developed after the tradeoff analysis is conducted. This process continues in an iterative manner throughout the materiel acquisition process until the system level support concept is refined into a detailed support plan covering all levels of maintenance, all items of hardware and software requiring support, and all operations and maintenance tasks. Where applicable, depot maintenance interservicing considerations should be included in alternative support concepts.

50.3.3.1 Alternative support systems are formulated by synthesizing alternatives for individual ILS elements into support systems. During this process, the following points must be considered:

a. Interrelationships that exist between the ILS elements (e.g., manpower, personnel, and training alternatives may depend upon support equipment alternatives).

b. Formulation of detailed alternatives for one element of ILS may not be cost effective until higher level system alternatives are evaluated and selected.

Source: https://assist.dla.mil -- Downloaded: 2016-12-05T13:04Z
Check the source to verify that this is the current version before use.

50.3.3.2 In some cases, formulating support alternatives may be an inherent feature of models used in the evaluation and tradeoff process. This is especially true for many RLA models used during Full Scale Development where repair versus discard alternatives and alternative maintenance levels for repair and discard are automatically formulated and analyzed during execution of the model. In these cases, citing Task 303 and specifying use of a particular model may limit the required scope of Task 302. Additionally, the scope of Task 302 may be limited when dealing with equipment level acquisitions. In these cases, the support alternatives may be restricted due to the system level support concept.

50.3.4 Evaluation of Alternatives and Tradeoff Analysis (Task 303). Tradeoff analysis between design, operational, and support alternatives is an inherent part of system development. Optimum benefits are realized when these analyses are conducted considering all system factors (cost, schedule, performance, and supportability) before the system is finalized. The nature of the tradeoff models and techniques used and the magnitude, scope, and level of detail of the analysis will depend upon both the acquisition phase and the system complexity. Tradeoffs early in the program will generally be interdisciplinary and broad in scope. As development progresses, tradeoffs are progressively refined, inputs become more specific, and outputs influence a smaller number of related parameters.

50.3.4.1 Tradeoffs between the support alternatives identified for the new system/equipment are conducted to identify the support approach which best satisfies the requirements. These tradeoffs are conducted by using a model or manual procedure which relates the design, operation, and logistic support resource factors of alternatives to the supportability requirements for the system/equipment. Alternatives can then be ranked and the sensitivity of the results to changes in key design, operation, or support factors can be determined. Results, including the rationale for selection and rejection of alternatives, should be documented for subsequent iterations and refinements. Tradeoff analysis results, both between support alternatives and between support, design, and operational alternatives, become a prime data input into the system decision process. As such, the tradeoff analysis results must include indentification of assumptions and risks involved.

50.3.4.2 Subtask 303.2.1 provides the general requirements for each evaluation and tradeoff performed under Task 303. Subtasks 303.2.2 and 303.2.3 are continuing requirements throughout a system/equipment's life cycle to analyze alternative support approaches and alternative design, operations, and support approaches, respectively. The remaining subtasks represent key tradeoffs and evaluations that are frequently applicable during given phases of the life cycle as indicated in Table III. For a given acquisition program, the range of potential tradeoffs and evaluations is essentially

Source: https://assist.dla.mil -- Downloaded: 2016-12-05T13:04Z
Check the source to verify that this is the current version before use.

Reliability and Maintainability Interface - Reliability and maintainability design parameters are a key factor in the design of affordable and supportable systems. R&M parameters provide inputs into the design and LSA process that quantitatively link system readiness to the ILS elements. One of the principal elements of ILS.

Realiability Centered Maintenance - A systematic approach for identifying preventive maintenance tasks for an equipment end item in accordance with a specified set of procedures and for establishing intervals between maintenance tasks.

Repair Parts - Those support items that are an integral part of the end item or system which are coded as nonreparable.

Requiring Authority - That activity (government, contractor, or subcontractor) which levies LSA task or subtask performance requirements on another activity (performing activity) through a contract or other document of agreement.

Risks - The opposite of confidence or assurance; the probability that the conclusion reached as to the contents of a lot (number of defects or defective range) is incorrect.

Scheduled Maintenance - Preventive maintenance performed at prescribed points in the item's life.

Sensitivity Analysis - An analysis concerned with determining the amount by which model parameter estimates can be in error before the generated decision alternative will no longer be superior to others.

Site Survey - An examination of potential locations and supporting technical facilities for capability to base a system.

Source, Maintenance and Recoverability (SMR) Codes - Uniform codes assigned to all support items early in the acquisition cycle to convey maintenance and supply instructions to the various logistic support levels and using commands. They are assigned based on the logistic support planned for the end item and its components. The uniform code format is composed of three, two character parts; Source Codes, Maintenance Codes, and Recoverability Codes in that order.

Spares - Those support items that are an integral part of the end item or system which are coded as reparable.

Reprinted without change

Source: https://assist.dla.mil -- Downloaded: 2016-12-05T13:04Z
Check the source to verify that this is the current version before use.

Standardization and Interoperability.

Standardization. The process by which member nations achieve the closest practicable cooperation among forces; the most efficient use of research, development, and production resources; and agree to adopt on the broadest possible basis the use of: (1) common or compatible operational, administrative, and logistics procedures; (2) common or compatible technical procedures and criteria; (3) common, compatible, or interchangeable supplies, components, weapons, or equipment; and (4) common or compatible tatical doctrine with corresponding organizational compatibility.

Interoperability. The ability of systems, units, or forces to provide services to and accept services from other systems, units, or forces and to use the services so exchanged to enable them to operate effectively together.

Supply Support - All management actions, procedures, and techniques required to determine requirements for, acquire, catalog, receive, store, transfer, issue, and dispose of secondary items. This includes provisioning for initial support as well as replenishment supply support. One of the principal elements of ILS.

Supportability - A measure of the degree to which all resources required to operate and maintain the system/equipment can be provided in sufficient quantity. Supportability encompasses all elements of ILS, as defined in DODI 5000.2.

Supportability Assessment - An evaluation of how well the composite of support considerations necessary to achieve the effective and economical support of a system for its life cycle meets stated quantitative and qualitative requirements. This includes integrated logistic support and logistic support resource related O&S cost considerations.

Supportability Factors - Qualitative and quantitative indicators of supportability.

Supportability Related Design Factors - Those supportability factors which include only the effects of an item's design. Examples include inherent reliability and maintainability values, testability values, transportability characteristics, etc.

Support Concept - A complete system level description of a support system, consisting of an integrated set of ILS element concepts, which meets the functional support requirements and is in harmony with the design and operational concepts.

Source: https://assist.dla.mil -- Downloaded: 2016-12-05T13:04Z
Check the source to verify that this is the current version before use.

Support Equipment - All equipment (mobile or fixed) required to support the operation and maintenance of a materiel system. This includes associated multiuse end items, ground handling and maintenance equipment, tools, metrology and calibration equipment, communications resources, test equipment and automatic test equipment, with diagnostic software for both on and off equipment maintenance. It includes the acquisition of logistics support for the support and test equipment itself. One of the principal elements of ILS.

Support Plan - A detailed description of a support system covering each element of ILS and having consistency between the elements of ILS. Support plans cover lower hardware indenture levels and provide a more detailed coverage of maintenance level functions than support concepts.

Support Resources - The materiel and personnel elements required to operate and maintain a system to meet readiness and sustainability requirements. New support resources are those which require development. Critical support resources are those which are not new but require special management attention due to schedule requirements, cost implications, known scarcities, or foreign markets.

Support System - A composite of all the resources that must be acquired for operating and maintaining a system or equipment throughout its life cycle.

System Effectiveness - A measure of an items ability to meet operational requirements as a function of performance of the hardware, operator/maintainer and environment (operational, social, physical). System effectiveness takes into account man/machine and man/man interfaces.

System Engineering Process - A logical sequence of activities and decisions transforming an operational need into a description of system performance parameters and a preferred system configuration.

System/Equipment - The item under analysis, be it a complete system, or any portion there+of being procured.

System Readiness - A measure or measures of the ability of a system to undertake and sustain a specified set of missions at planned peacetime and wartime utilization rates. System readiness measures take explicit account of the system design (reliability and maintainability), the characteristics and performance of the support system, and the quantity and location of support resources. Examples of typical readiness measures are sortie rate, mission capable rate, operational availability, and asset ready rate.

Source: https://assist.dla.mil -- Downloaded: 2016-12-05T13:04Z
Check the source to verify that this is the current version before use.

Tailoring - The process by which the individual requirements (sections, paragraphs, or sentences) of the selected specifications and standards are evaluated to determine the extent to which each requirement is most suitable for a specific materiel acquisition and the modification of these requirements, where necessary, to assure that each tailored document invoked states only the minimum needs of the Government. Tailoring is not a license to specify a zero LSA program, and must conform to provisions of existing regulations governing LSA programs.

Task - A single unit of specific work behavior with clear beginning and ending points and directly observable or otherwise measurable process, frequently, but not always resulting in a product that can be evaluated for quantity, quality, accuracy, or fitness in the work environment. A task is the lowest level of behavior in a job that describes the performance of a meaningful function in the job under consideration.

Task Analysis - A process of reviewing job content and context as it pertains to an emerging equipment design to classify units of work (duties/primary skills and tasks/discrete skills) within a job. The process provides a procedure for isolating each unique unit of work and for describing each unit accomplished.

Task Inventory - A comprehensive listing of all tasks performed by system personnel to operate and maintain the item.

Task Taxonomy - The following taxonomy will be utilized to inventory and analyze tasks:

(a) Mission: What the system is suppose to accomplish. e.g., combat reconnaisance.

(b) Scenario/Conditions: Categories of factors or constraints under which the system will be expected to operate and be maintained, e.g., day/night, all weather, all terrain operation.

(c) Functions: A broad category of activity performed by a system, e.g., transportation.

(d) Job: The combination of all human performance required for operation and maintenance of one personnel position in a system, e.g., driver.

(e) Duty: A set of operationally-related tasks within a given job, e.g., driving, weapon servicing, communicating, target detection, self protection, operator maintenance.

(f) Task: A composite of related activities (perceptions, decisions, and responses) performed for an immediate purpose, written in operator/maintainer language, e.g., change a tire.

Source: https://assist.dla.mil -- Downloaded: 2016-12-05T13:04Z
Check the source to verify that this is the current version before use.

(g) Subtask: Activities (perceptions, decisions, and responses) which fulfill a portion of the immediate purpose within a task, e.g., remove lug nuts.

(h) Task Element: The smallest logically and reasonably definable unit of behavior required in completing a task or subtask, e.g., apply counter clockwise torque to the lug nuts with a lug wrench.

Technical Data - Recorded information regardless of form or character (e.g. manuals, drawings) of a scientific or technical nature. Computer programs and related software are not technical data; documentation of computer programs and related software are. Also excluded are financial data or other information related to contract administration. One of the principal elements of ILS.

Testability - A design characteristic which allows the status (operable, inoperable, or degraded) of an item and the location of any faults within the item to be confidently determined in a timely fashion.

Thresholds - Values, or a range of values, apportioned to the various design, operational, and support elements of a system which impose a quantitative or qualitative minimum - essential level of performance. Thresholds are usually associated with a goal.

Tradeoff - The determination of the optimum balance between system characteristics (cost, schedule, performance, and supportability).

Training - The structured process by which individuals are provided with the skills necessary for successful performance in their job, slot, billet, or specialty.

Training and Training Devices - The processes, procedures, techniques, and equipment used to train active and reserve personnel to operate and support a materiel system. This includes individual and crew training, new equipment training, and logistic support for the training devices themselves. One of the principal elements of ILS.

Transportability - The inherent capability of material to be moved with available and projected transportation assets to meet schedules established in mobility plans, and the impact of system equipment and support items on the strategic mobility of operating military forces.

Unscheduled Maintenance - Corrective maintenance required by item conditions.

*U.S. GOVERNMENT PRINTING OFFICE: 1994-505-792/90019

Source: https://assist.dla.mil -- Downloaded: 2016-12-05T13:04Z
Check the source to verify that this is the current version before use.