METRIC

MIL-STD-1678-1D
3 October 2016
SUPERSEDING
MIL-STD-1678-1C
19 March 2015

DEPARTMENT OF DEFENSE
STANDARD PRACTICE

FIBER OPTIC CABLING SYSTEMS REQUIREMENTS AND MEASUREMENTS

(Part 1: DESIGN, INSTALLATION AND MAINTENANCE REQUIREMENTS)

(PART 1 OF 6 PARTS)

AMSC N/A

AREA 60GP

Source: https://assist.dla.mil -- Downloaded: 2016-12-31T20:53Z
Check the source to verify that this is the current version before use.

FOREWORD

1. This Department of Defense Standard Practice is approved for use by the DLA Land and Maritime, Defense Logistics Agency, and is available for use by all Departments and Agencies of the Department of Defense.

2. Comments, suggestions or questions on this document should be addressed to DLA Land and Maritime, ATTN: VAT, Post Office Box 3990, Columbus, OH 43218-3990, or emailed to (FiberOpticGroup@dla.mil). Since contact information can change, you may want to verify the currency of this address information using the ASSIST Online database at https://assist.dla.mil/.

3. This standard practice provides detailed information and guidance to personnel concerned with ensuring standardization of fiber optic cable topologies (optical fiber cabling and associated components) on military mobile vehicles used in air, land, and sea applications. In general, the requirements and methods specified herein are not identifiable to any specific mobile vehicle class or type, but are intended to standardize and minimize variations in requirements, test setups, test measurement procedures, test sample fabrication configurations, and other aspects that must be addressed for completeness. Where specified, constrains for usage or platform types will be listed. The term “platform” will be used to refer to the military mobile vehicles in general or, where designated, one particular class (such as “aircraft platform”) or one particular type within that class (such as “F-35”).

4. In order to provide flexibility in the use and update of the different aspects for requirements and methods, this standard practice is issued in six parts; as follows:

Part 1: Design, maintenance, and installation requirements. This part addresses design requirements for platforms that use cable harnesses as the means to transport data through optical fiber among communication network and end user equipment. Larger platforms that route trunk cables through cableways and drop cables to the end user (application equipment), can cite applicable requirements in Part 1 of the Standard Practice and augment them with use of MIL-HDBK-2051 and MIL-STD-2042 as appropriate. Surface ships and submarines are to use MIL-HDBK-2051, MIL-STD-2052, and MIL-STD-2042 in lieu of part 1 of this Standard Practice with the exception of Personnel Proficiency. For Personnel Proficiency, Surface ships and submarines are to use Navy shipboard and application training requirements in requirement 1306 of this Standard Practice.

Part 2 Optical measurements. Part 2 of this standard addresses further details to refine or bound (constrain) the performance of each optical test measurement addressed. The test methods, such as those in a TIA-455 series standard or military standard/specification, are cited already. This part of the standard practice augments the test method in the standard or specification to ensure consistency with setup and measurement procedure. This consistency minimizes variations when comparing data obtained from different test laboratories (including commercial, vendor, Government, and Government contractor).

Part 3 Physical, mechanical, environmental and material measurements. Part 3 of this standard addresses further details to refine or bound (constrain) the performance of each physical, mechanical, environmental and material test measurement or inspection addressed. The test methods, such as those in a TIA-455 series standard or military standard/specification, are cited already. This part of the standard practice augments the test method to ensure consistency with setup, measurement procedure, data recording/analysis and other factors critical to conducting or evaluating test performance. This consistency minimizes variations when comparing data obtained from different test laboratories (including commercial, vendor, Government and Government contractor).

Part 4 Test sample preparation/fabrication requirements. Part 4 of this standard addresses further details to refine or bound (constrain) the preparation and fabrication of test samples for the fiber optic components addressed. Fabrication methods, such as those in the Shipboard installation standard, MIL-STD-2042, or in the general series aircraft maintainer’s manual, NAVAIR 01-1A-505-4/T.O. 1-1A-14-4/TM 1-1500-323-24-4, are cited already. This part of the standard practice augments the fabrication method to ensure consistency of the test configuration

Source: https://assist.dla.mil -- Downloaded: 2016-12-31T20:53Z
Check the source to verify that this is the current version before use.

Part 5 Design phase and legacy measurements. Tests that are more unique to the design phase are addressed in Part 5 of this standard practice. Prequels for Part 2 of this standard practice contained other variants that are now excluded. These variants are now retained for informational purposes in Part 5. Also, Part 5 addresses some test methods cited in former DOD-STD-1678. The test methods cited in DOD-STD-1678 are considered obsolete; however, a few military specifications and commercial standards still refer to some of the test methods. These test methods are provided in this part of the standard with the recommended replacement method. These latter test methods are listed under the constraint that they be used only with the specific military specifications or commercial standards in which they are cited. The intent is to delete each DOD-STD-1678 test method from that standard practice in Part 5 once its reference from military specification or commercial standard is completed.

Part 6 Parts and support equipment commonality and standardization requirements, cable harness configurations. This part of the Standard Practice addresses component part and support equipment standardization requirements for platforms that use cable harnesses as the means to transport data through optical fiber among communication network and end user equipment. Surface ships and submarines are to use the Navy Shipboard Fiber Optic Recommended Components Parts List (a copy may be found at web site: https://fiberoptics.nswc.navy.mil/) in lieu of part 6 of this Standard Practice. Likewise, larger platforms that route trunk cables through cableways and drop cables to the end user (application equipment), can cite applicable requirements in Part 6 of the Standard Practice, cite the Navy shipboard Fiber Optic Recommended Components Parts List, or both, as appropriate.

Source: https://assist.dla.mil -- Downloaded: 2016-12-31T20:53Z
Check the source to verify that this is the current version before use.

CONTENTS

PARAGRAPH		PAGE
1.	SCOPE	1
1.1	Scope	1
1.1.1	Applicability	1
2.	APPLICABLE DOCUMENTS	2
2.1	General	2
2.2	Government documents	2
2.2.1	Specifications, standards and handbooks	2
2.2.2	Other Government documents, drawings and publications	2
2.3	Non-Government publications	2
2.4	Order of precedence	3
3.	DEFINITIONS	4
3.1	General fiber optics terms	4
3.2	Acronyms	4
3.3	End user equipment	4
3.4	Fiber Optic Cable Plant (FOCP)	4
3.5	Fiber Optic Cable Topology (FOCT)	4
3.6	Local cable	4
3.7	Minimum bend diameter, fiber optic cable	4
3.8	Minimum bend diameter, fiber optic cable assembly	4
3.9	Platform	4
3.10	Platform class	4
3.11	Platform type	4
3.12	Reliability	4
3.13	Durability	4
4.	GENERAL REQUIREMENTS	5
4.1	Consistent approach throughout system engineering process	5
4.1.1	System design considerations	5
4.2	Reduction of total ownership cost	5
4.3	Operating wavelength	6
4.4	Consensus of design requirements	6
5.	DETAILED REQUIREMENTS	7
5.1	Cabling requirements	7
5.2	Cabling support requirements	7
5.3	Cabling implementation verification requirements	7
5.4	Cabling documentation requirements	7
6.	NOTES	8
6.1	Intended use	8
6.2	Acquisition documents	8
6.3	Subject term (key word) listing	8
6.4	Changes from previous issue	8
6.5	Supersession data	8

Source: https://assist.dla.mil -- Downloaded: 2016-12-31T20:53Z
Check the source to verify that this is the current version before use.

PARAGRAPH		PAGE
REQUIREMENTS		
Cabling requirements		
1101	Fiber Optic Cabling Routing, Placement and Other Specific Design Practices	10
1102	Fiber Optic Cabling Components	22
1103	Fiber Optic Cable Repair	26
1104	Fiber Optic Cabling Labeling	29
1105	Fiber Optic Cabling Interface on Equipment Modules	38
Cabling support requirements		
1201	Built-In-Test (BIT)	44
1202	Loss Budget Calculations	47
Cabling implementation verification requirements		
1301	Optical Measurement Inspections	52
1302	End Face Geometry Inspection	55
1303	Fiber Optic Cabling Post Installation Inspection	58
1304	Fiber Optic Cabling Quality Conformance Inspection	60
1305	Ferrule End Face Visual Inspection	62
1306	Personnel Proficiency	76
Cabling documentation requirements		
1401	Fiber Optic Cabling Technical Documentation	81
1402	Fiber Optic Cabling Management Documentation	83
1403	Fiber Optic Cable Harness Drawings	85
Requirements, support material		
1501	Lessons learned	91
1502	Distinctions between fiber and wire	99

Source: https://assist.dla.mil -- Downloaded: 2016-12-31T20:53Z
Check the source to verify that this is the current version before use.

1. SCOPE

1.1 Scope. Part 1 of this standard practice provides detailed design requirements for platforms that use cable harnesses as the means to transport data through optical fiber among communication network and end user equipment.

1.1.1 Applicability. These criteria apply to platforms in which the fiber optic topology (fiber cable plant, local cabling, and components to end used equipment such as WRA – weapons replaceable assembly, LRM – line replaceable module, LRU – line replaceable unit) is in the form of fiber optic harnesses. Larger platforms that route trunk cables through cableways and drop cables to the end user (application equipment), can cite applicable requirements in part 1 of the Standard Practice and augment with the use of MIL-HDBK-2051 and MIL-STD-2042 as appropriate. Surface ships and submarines, are to use MIL-HDBK-2051, MIL-STD 2052, and MIL-STD-2042 in lieu of Part 1 of this Standard Practice. These criteria are intended primarily for new construction; however, they are also applicable for conversions or alterations of existing platforms. The rapidly changing state of the art in fiber optic technology makes it essential that some degree of flexibility be exercised in enforcing this document. When there is a conflict between this document and the platform specification or contract, the platform specification or contract will take precedence. Where platform design is such that the requirements herein cannot be implemented, users will submit new requirements or modifications of existing requirements to consider for incorporation into this standard practice to: DLA Land and Maritime, ATTN: VAT, Post Office Box 3990, Columbus, OH 43218-3990, or emailed to (FiberOpticGroup@dla.mil).

Source: https://assist.dla.mil -- Downloaded: 2016-12-31T20:53Z
Check the source to verify that this is the current version before use.

2. APPLICABLE DOCUMENTS

2.1 General. The documents listed in this section are specified in sections 3, 4, and 5 of this standard. This section does not include documents cited in other sections of this standard or recommended for additional information or as examples. While every effort has been made to ensure the completeness of this list, document users are cautioned that they must meet all specified requirements of documents cited in sections 3, 4, and 5 of this standard, whether or not they are listed.

2.2 Government documents.

2.2.1 Specifications, standards, and handbooks. The following specifications, standards, and handbooks form a part of this document to the extent specified herein. Unless otherwise specified, the issues of these documents are those cited in the solicitation or contract.

DEPARTMENT OF DEFENSE STANDARDS

MIL-STD-2042	-	Fiber Optic Cable Topology Installation, Standard Methods for Naval Ships, Parts 1 to 6.
MIL-STD-2052	-	Fiber Optic System Design.

DEPARTMENT OF DEFENSE HANDBOOK

MIL-HDBK-2051	-	Fiber Optic Shipboard Cable Topology Design Guidance.

(Copies of these documents are available online at http://quicksearch.dla.mil or from the Standardization Document Order Desk, 700 Robbins Avenue, Building 4D, Philadelphia, PA 19111-5094.)

2.2.2 Other Government documents, drawings, and publications. The following other Government documents, drawings, and publications form a part of this standard practice to the extent specified herein. Unless otherwise specified, the issues are those cited in the solicitation or contract.

DEPARTMENT OF DEFENSE DRAWING

NAVAIR 01-1A-505-1/ T.O. 1-1A-14/TM1-1500-232-24-4	Installation and Testing Practices Aircraft Fiber Optic Cabling.

(A copy of this document is available online at: https://mynatec.navair.navy.mil. NATEC has three different processes to obtain the manual, depending on if you are Government personnel (military and civilians), Contractors with a Government contract, or everyone else. If unable to access this Web Site or require further assistance, contact (1) NATEC Customer Service: 619.545.1888, (2) NATEC Website Status Hotline: 619.545.1706, or (3) NATEC Customer Service E-mail: nani_customerservice@navy.mil.)

2.3 Non-Government publications. The following documents form a part of this document to the extent specified herein. Unless otherwise specified, the issues of these documents are cited in the solicitation or contract.

AMERICAN NATIONAL STANDARDS INSTITUTE

ANSI Z136.2	Safe Use of Optical Fiber Communication Systems Utilizing Laser Diode and LED Sources.

(Copies are available online at http://www.ansi.org or can be obtained from the American National Standards Institute, 1430 Broadway, New York, NY 10018-3308.)

Source: https://assist.dla.mil -- Downloaded: 2016-12-31T20:53Z
Check the source to verify that this is the current version before use.

TELECOMMUNICATIONS INDUSTRY ASSOCIATION

TIA440 - Fiber Optic Terminology.

(Copies are available online at www.tiaonline.org or from Telecommunications Industry Association (TIA), 2500 Wilson Boulevard, Suite 300, Arlington VA 22201.)

2.4 Order of precedence. Unless otherwise noted herein or in the contract, in the event of a conflict between the text of this document and the references cited herein, the text of this document takes precedence. Nothing in this document, however, supersedes applicable laws and regulations unless a specific exemption has been obtained.

3. DEFINITIONS

3.1 General fiber optics terms. Definitions for general fiber optic terms used in this standard practice are in accordance with TIA440 except as otherwise specified in 3.1.1 and herein. Definitions for other terms as they are used in this standard practice are given in the following paragraphs.

3.1.1 Standardization for usage of terms (spelling).

a. Fiber optic. The word "optic" appears without an "s" when the term "fiber optic" is used as an adjective, such as "fiber optic cable", "fiber optic component". Example of a usage is "The fiber optic system is comprised of fiber optic cable with fiber optic connectors, but without any fiber optic splices."

b. Fiber optics. The word "optics" appears with an "s" when the term "fiber optics" is used as a noun, such as "fully fiber optics". Example of a usage is "The system is comprised of both wiring media and fiber optics."

c. Multimode. The word "multimode" appears as one word as opposed to two words or two words separated by a hyphen. Example of a usage is "The cable in the system is comprised of fiber optic, multimode cable."

d. Single mode. The word "single mode" appears as two words as opposed to one word or two words separated by a hyphen. Example of a usage is "The cable in the system is comprised of fiber optic, single mode cable."

3.2 Acronyms. The following acronyms are used in this standard practice:

ATR	Air transport rack
FOCP	Fiber optic cable plant.
FOCT	Fiber optic cable topology.
LRC	Line Replaceable Component
LRM	Line replaceable module.
LRU	Line replaceable unit.
WRA	Weapons replaceable assembly.

3.3 End user equipment. This equipment is either the source or destination of an optical signal. This equipment can be a cabinet, case, panel, or device. The devices include WRA: Weapons replaceable assembly, LRM: Line replaceable module, and LRU: Line replaceable unit.

3.4 Fiber optic cable plant (FOCP). The FOCP is a subset of the FOCT that excludes cables within the ATCs, LRCs, LRMs, LRUs or WRAs and their associated components. The FOCP consists of the backbone cabling run between transmitting and receiving network nodes on some platforms and on the outside of the bulkhead or electronic equipment on other platforms.

3.5 Fiber optic cable topology (FOCT). The FOCT is an integrated optical fiber distribution system that provides the optical interconnection between end user equipments. Included in the FOCT are the FOCP and the cable within the ATC, LRC, LRM, LRU or WRA.

3.6 Local cable. A fiber optic cable run between end users.

3.7 Minimum bend diameter, fiber optic cable. The smallest diameter at which a fiber optic cable can be bent without degrading optical performance. The short-term bend diameter applies during handling and installing; the long-term bend diameter applies once the installation is completed.

3.8 Minimum bend diameter, fiber optic cable assembly. The smallest diameter at which a fiber optic cable assembly can be bent without degrading optical performance, or the diameter at which convoluted tubing in which fiber optic cable is run can be bent without

Source: https://assist.dla.mil -- Downloaded: 2016-12-31T20:53Z
Check the source to verify that this is the current version before use.

kinking the tube. The short-term bend diameter applies during handling and installing; the long-term bend diameter applies once the installation is completed.

3.9 Platform. A military mobile vehicle used in air, land, or sea applications.

3.10 Platform class. A general category of military mobile vehicles such as aircraft, aircraft fixed wing, aircraft rotary, truck, cargo truck, armored assault vehicle, ship, surface ship, or submarine.

3.11 Platform type. A specific military mobile vehicle such as an F-35 under aircraft or DDG-51 under ship.

3.12 Reliability. The probability that an item will perform in its intended function for a specific interval under stated conditions.

3.13 Durability. The length of a failure free or maintenance free operational period.

Source: https://assist.dla.mil -- Downloaded: 2016-12-31T20:53Z
Check the source to verify that this is the current version before use.

4. GENERAL REQUIREMENTS

4.1 Consistent approach throughout system engineering process. A consistent approach shall be used throughout the fiber optic system engineering process. Fiber optic system design is not an isolated analysis and does not consider the power budget alone. Use of a consistent approach will provide increased assurance that a fiber optic system will perform as designed for the life of the system.

4.1.1 System design considerations. These considerations shall include the operating environment, system architecture, power budget, component qualification, installation processes, installation verification processes, and support concept as illustrated in the flow chart in figure 1.

a. System architecture shall consider the options for both physical configuration and optical interface.

b. Environmental and aged performance of the passive components and optical interfaces in general shall be considered in addition to the performance of components in a benign environment.

c. Other processes in the system design include installation processes, installation verification processes and support concept.

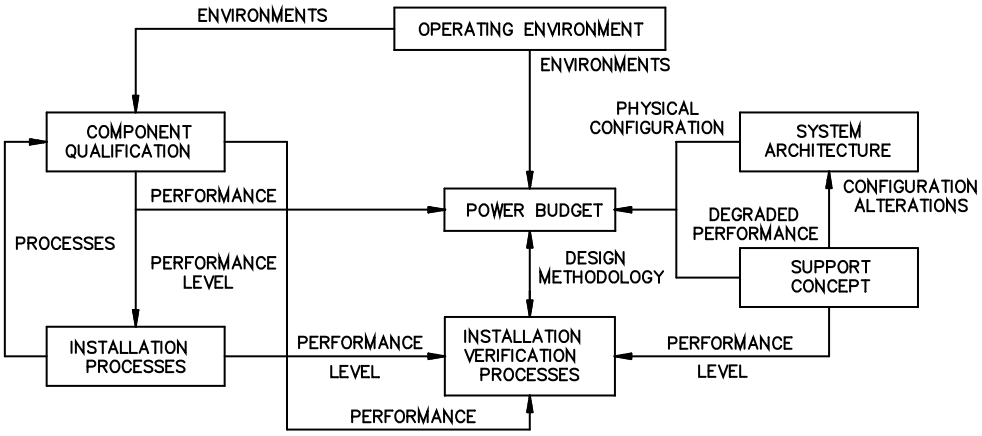

FIGURE 1. Chart for consistency of the fiber optic system design process.

4.2 Reduction of total ownership cost. Fiber optic design requirements shall be based on total ownership cost. Total ownership cost criteria to incorporate into the design requirements shall include:

a. Use of standard processes and practices as specified in Part 1 of this Standard Practice.

b. Use of standard parts as specified in Part 1 of this Standard Practice.

c. Reducing training costs by applying 4.2a and 4.2b into system design as specified in Part 1 of this Standard Practice.

d. Reducing logistic support costs by implementing 4.2a through 4.2c into system design as specified in Part 1 of this Standard Practice.

Source: https://assist.dla.mil -- Downloaded: 2016-12-31T20:53Z
Check the source to verify that this is the current version before use.

e. Use practices that improve reliability, maintainability, durability, performance, producibility, quality, and safety over the entire expected service life of the platform.

(1) Laser safety precautions. The classification of a laser is based on the ability of the optical beam to cause damage to the eye. Under normal operating conditions, the laser diode found in an optical fiber communication system (OFCS) is inherently an eye safe system; but when an optical fiber connection is broken and optical viewing instruments are used, it is possible that hazardous energy can enter the eye. For this reason, four service group hazard classes have been devised to indicate the degree of hazard and required hazard control measures. Refer to ANSI Z136.2 for a full technical definition. Refer to subordinate work package 004 01 of NAVAIR 01-1A-505-4/T.O. 1-1A-14-4/TM 1-1500-323-24-4 for a laser safety refresher summary.

(2) Fiber optic safety precautions. The fiber optic safety precautions listed in subordinate work package 004 01 of NAVAIR 01-1A-505-4/T.O. 1-1A-14-4/TM 1-1500-323-24-4 shall apply.

f. Use practices that ensure interoperability of fiber optic components and systems among platform types and classes.

4.3 Operating wavelength. Unless otherwise specified, the default operating wavelengths in 4.3.1 shall be specified as the standard transmission wavelength for the platform. Where feasible, wavelength of operation shall be standardized for each class of platform (see 3 under foreword).

4.3.1 Default. System shall be designed to operate at a nominal wavelength of either 850 nanometers (nm) for multimode optical fibers and at 1,550 nm for single mode optical fibers.

4.3.2 Alternative. System shall be designed to operate at a nominal wavelength of either 1,300 nanometers (nm) for multimode optical fibers and at 1,310 nm for single mode optical fibers. Other wavelengths of operation may be specified, but are less preferred.

4.4 Consensus of design requirements. The Joint Fiber Optic Working Group (JFOWG) shall be the means to reach consensus on standardization of new/revised design requirements, identify new requirements and new technologies that permit its rapid introduction, and provide those requirements to update Part 1 of this Standard Practice.

Source: https://assist.dla.mil -- Downloaded: 2016-12-31T20:53Z
Check the source to verify that this is the current version before use.

5. DETAILED REQUIREMENTS

5.1 Cabling requirements. Requirements shall be implemented as specified in 5.1.1 through 5.1.4.

5.1.1 Cabling installation routing and specific practices. System design shall be performed to Requirement 1101.

5.1.2 Fiber optic cabling components. System design shall be performed to Requirement 1102.

5.1.3 Fiber optic cable repair. System design shall be performed to Requirement 1103

5.1.4 Fiber optic cabling labeling. System design shall be performed to Requirement 1104

5.2 Cabling support requirements. Requirements shall be implemented as specified in 5.2.1 and 5.2.2.

5.2.1 Built-In-Test (BIT). System design shall be performed to Requirement 1201.

5.2.2 Loss budget calculation. System design shall be performed to Requirement 1202.

5.3 Cabling implementation verification requirements. Requirements shall be implemented as specified in 5.3.1 through 5.3.4.

5.3.1 Optical measurements inspection. System design shall be performed to Requirement 1301.

5.3.2 End face geometry inspection. System design shall be performed to Requirement 1302.

5.3.3 Fiber optic cabling post installation inspection. System design shall be performed to Requirement 1303.

5.3.4 Fiber optic cabling conformance inspection. System design shall be performed to Requirement 1304.

5.3.5 Ferrule end face visual inspection. System design shall be performed to Requirement 1305.

5.4 Cabling documentation requirements. Requirements shall be implemented as specified in 5.4.1 through 5.4.3.

5.4.1 Fiber optic cabling technical documentation. System design shall be performed to Requirement 1401.

5.4.2 Fiber optic cabling management documentation. System design shall be performed to Requirement 1402.

5.4.3 Fiber optic cable harness drawing. System design shall be performed to Requirement 1403.

5.5 Requirements, support material. Requirements shall be implemented as specified in 5.5.1 and 5.5.2.

5.5.1 Lessons learned. System design shall incorporate support material per Requirement 1501.

5.5.2 Distinctions between fiber and wire. System design shall incorporate support material per Requirement 1502.

Source: https://assist.dla.mil -- Downloaded: 2016-12-31T20:53Z
Check the source to verify that this is the current version before use.

6. NOTES

(This section contains information of a general or explanatory nature that may be helpful, but is not mandatory.)

6.1 Intended use. The design requirements depicted in this standard practice are intended primarily for new construction; however, they are applicable for conversion or alteration of existing platforms.

6.2 Acquisition requirements. Acquisition documents should specify the following:

Title, number, and date of this standard practice.

6.3 Subject term (key word) listing.

Built-In-Test (BIT)
Documentation requirements
End face geometry
Harness drawing
Loss budget calculation

6.4 Changes from previous issue. The margins of this standard are marked with vertical lines to indicate where changes from the previous issue were made. This was done as a convenience only and the Government assumes no liability whatsoever for any inaccuracies in these notations. Bidders and contractors are cautioned to evaluate the requirements of this document based on the entire content irrespective of the marginal notations and relationship to the last previous issue.

6.5 Supersession data. The six parts of MIL-STD-1678 replace superseded DOD-STD-1678 with completely new fiber optic requirements and measurements. With the exception of some legacy material in Part 5 of MIL-STD-1678, none of the fiber optic test and measurement material comprising superseded DOD-STD-1678 has been included. With the exceptions noted in Part 5 of this standard practice, this standard practice should be applied in lieu of the legacy methods in superseded DOD-STD-1678.

Source: https://assist.dla.mil -- Downloaded: 2016-12-31T20:53Z
Check the source to verify that this is the current version before use.

CABLING REQUIREMENTS

(1101-1104)

Source: https://assist.dla.mil -- Downloaded: 2016-12-31T20:53Z
Check the source to verify that this is the current version before use.

REQUIREMENT 1101

FIBER OPTIC CABLING ROUTING, PLACEMENT AND OTHER SPECIFIC DESIGN PRACTICES

1. Purpose. This requirement establishes distinct criteria for specific routing, placement, and other design practices of fiber optic cabling components and assemblies, consisting of cables, cable bundles, and cable harnesses (hereinafter collectively referred to as cabling). This requirement is intended for developmental, prototype, production, rework, and modification programs on military platform fiber optic cable assemblies.

2. Applicable documents.

2.1 General. The documents listed in this section are specified in sections 3, 4, and 5 of this standard practice. This section does not include documents cited in other sections of this standard practice or recommended for additional information or as examples. While every effort has been made to ensure the completeness of this list, document users are cautioned that they must meet all specified requirements of documents cited in sections 3, 4, and 5 of this standard practice, whether or not they are listed.

2.2 Non-Government publications. The following documents form a part of this document to the extent specified herein. Unless otherwise specified, the issues of these documents are cited in the solicitation or contract.

SAE INTERNATIONAL

SAE AS50881 - Wiring, Aerospace Vehicle.

(Copies of these documents are available online at www.sae.org from SAE International, 400 Commonwealth Drive, Warrendale, PA 15096-0001, and Tel: 877-606-7323 [inside USA and Canada] or 724-776-4970 [outside USA], email at CustomerService@sae.org.)

2.3 Order of precedence. Unless otherwise noted herein or in the contract, in the event of a conflict between the text of this document and the references cited herein, the text of this document takes precedence. Nothing in this document, however, supersedes applicable laws and regulations unless a specific exemption has been obtained.

3. Definitions.

3.1 Fiber optic cabling. Fiber optic cabling is a term used to include single fiber cable, multiple fiber cable, fiber optic cable bundles, and fiber optic cable harnesses. The (optical) fiber is the optical conduit or waveguide transmission medium, whereas metallic conductor (wire) is used in an electrical cable. Cable structure is added to make the fibers easier to handle and maintain. The fiber is a thin piece of glass (with a diameter usually around 125 micrometers) that contains and transports the light signals.

3.2 Wire. “A usually pliable metallic strand or rod made in many lengths and diameters, sometimes clad and often electrically insulated, used chiefly for structural support or to conduct electricity.” Source: American Heritage Dictionary, College Edition.

4. Installation. Cabling shall be installed as specified in SAE AS50881.

5. Guidance. Guidance for implementation from lessons learned (see 6.1) is documented in appendix A of this Requirement.

6. Notes.

6.1 Lessons learned.

6.1.1 Cleaning.

Source: https://assist.dla.mil -- Downloaded: 2016-12-31T20:53Z
Check the source to verify that this is the current version before use.

6.1.1.1 Cleaning is paramount. Current military maintainer experience has been that about 80 percent of fiber optic maintenance actions are traced back to cleaning at fiber optic connection interfaces. Use of an inspect-clean-inspect process (such as the one found in the General Series Maintenance Manual, NAVAIR 01-1A-505-4/T.O. 1-1A-14-4/TM 1-1500-323-24-4) ensures proper operation once maintenance action is complete.

6.1.1.2 Use of dummy stowage receptacles. Install dummy stowage receptacles for securing connector plug end of cabling adjacent to equipment. This avoids contamination, which might be difficult to clean, during storage.

6.1.1.3 Minimize termini contamination. Use dust covers and dummy connector receptacles as the means to minimize termini contamination when a multiple termini connector is unmated.

6.1.1.4 Segregation of termini and contacts. Segregation of fiber optic termini from electrical contacts reduces cleaning issues and minimizes occurrences of applying preservatives to connectors with fiber optic termini.

6.1.2 Selection.

6.1.2.1 Preferred construction of cable harness or protection for cable runs. Use convoluted tubing as the means to protect the fiber optic cables and cable bundles in both a protected cable harness configuration and for cabling runs within an open cable harness. Use clear or semi-transparent convoluted tubing. Use convoluted tubing made from FEP (fluorinated ethylene propylene) for general use. Use convoluted tubing made from PEEK (polyether-ether-ketone) for intra cabin applications requiring low smoke and zero halogen fire emissions.

6.1.2.2 Use proven components and construction (see Requirement 1102). Use of untried, developmental components has repeatedly shown failure mechanisms and problems already addressed in the preferred components (see Requirement 1102).

6.1.2.3 Drainage holes in convoluted tubing. Placement of drainage holes in convoluted tubing after installation of fiber optic cable bundles results in significant fiber breakage. If drainage holes are required, pre-perforated convoluted tubing is preferred.

6.1.3 Layout.

6.1.3.1 Constraints on redundancy. Redundant paths of fiber optic cabling must be routed in separate cable harnesses versus in the same fiber optic cable bundle. Risk of signal loss is reduced when cause of fiber breakage may extend to multiple fibers in the same bundle or routing path.

6.1.3.2 Maintenance actions. Design system to minimize removal of equipment that requires mating and de-mating of fiber optic connectors (design system to minimize fiber optic connector mating and de-mating).

6.1.3.3 Use of maintenance breaks. Use of maintenance breaks near network equipment and end user equipment allows remove and replace subassemblies at locations likely to see high maintenance and corresponding high likelihood of maintenance induced failures. Making these maintenance breaks a common length minimizes the number of replacement configurations that need to be logistically supported.

6.1.4 Placement.

6.1.4.1 Minimize slack in cabling. Reduced cable slack discourages fiber optic cabling from being used as hangers, hand-holds, and other practices detrimental to optical fiber survivability in addition to minimizing chances of fiber breakage/fatigue caused by operational environmental and mechanical stresses.

6.1.4.2 Support cabling in areas requiring movement. Applications requiring movement (such as shifting or sliding) in the fiber optic cabling must have the cabling mounted to a movable support versus allowing a length of unsupported cabling. Equipment mounts requiring sliding or shifting of fiber optic cabling for installation or maintenance is not preferred and should be minimized.

6.1.4.3 Segregate optical fiber. Mixing of electrical conductors with optical fibers in the same cable bundle or cable harness does not allow for easy identification, maintenance, and handling of the fiber optic cables. This lack of identification results in increase breakage of the fiber optic cables during initial installation and maintenance.

REQUIREMENT 1101

Source: https://assist.dla.mil -- Downloaded: 2016-12-31T20:53Z
Check the source to verify that this is the current version before use.

6.1.4.4 Use a remove and replace repair strategy for optical fiber. The preferred repair method is to use a remove and replace repair strategy rather than repair in situ (such as with a splice). When a splice is used, the portion of the cable after the break is removed (including its end terminus) and replaced with a prefabricated terminus pigtail. This avoids termination (application of a terminus including curing and polishing) on the aircraft. Fiber breaks occur almost always within 304.8 mm (12 inches) from the connector. Prioritizing of repair strategies are as follows: (1) remove and replace of short segments (i.e., maintenance breaks), (2) remove and replace fiber within convoluted tubing, (3) perform splicing. Splice lessons learned are found under requirement 1103.

6.1.5 Personnel considerations.

6.1.5.1 Follow laser safety and fiber optic handling instruction. Installation/maintenance personnel training must include laser safety and fiber optic handling to mitigate risks such as eye and skin damage.

6.1.5.2 Follow the common maintenance procedures. Follow common maintenance procedures such as in the General Series Maintenance Manual, NAVAIR 01-1A-505-4/T.O. 1-1A-14-4/TM 1-1500-323-24-4. System design consideration will be based on these or equivalent procedures.

6.1.5.3 Personnel information overload. Standardization can minimize the logistics footprint and reduce the strain on the maintainer by minimizing the total number of variations which a maintainer has to remember as well as execute with proficiency potentially over long periods of disuse. Standardization can extend to installation and maintenance practices and the parameters they use (such as cable bend diameter). Stated succinctly - use the KISS principle (Keep It Simple and Segmented).

6.1.5.4 Personnel proficiency. Time to repair a failure is greatly reduced by providing a remove and replace maintenance strategy that quickly identifies the replaceable unit (such as fiber segment) eliminating the need for complicated troubleshooting or in situ repair.

6.2 Intended use. On these platforms, the fiber optic cable assemblies intended to be inspected include (1) cable harnesses, (2) equipment (electronic module/package) such as an ATC, LRC, LRM, LRU or WRA with internal fiber optics, (3) circuit card modules and assemblies with internal fiber optics, (4) fiber optic test jumpers, and (5) other miscellaneous cabling.

6.2.1 Routing and specific installation practices. Field practices for routing and installation are implemented to WP 012 of NAVAIR 01-1A-505-4/T.O. 1-1A-14-4/TM 1-1500-323-24-4 for aircraft platforms. These same practices can be adopted or tailored for other platforms.

Source: https://assist.dla.mil -- Downloaded: 2016-12-31T20:53Z
Check the source to verify that this is the current version before use.

APPENDIX A

GUIDANCE FOR IMPLEMENTATION OF LESSONS LEARNED

A.1 Purpose. This appendix addresses routing and other specific practices to implement based on lessons learned from field/fleet maintainers.

A.2 Applicable documents.

A.2.1 General. The documents listed in this section are specified in sections A.3, A.4, and A.5 of this standard practice. This section does not include documents cited in other sections of this standard or recommended for additional information or as examples. While every effort has been made to ensure the completeness of this list, document users are cautioned that they must meet all specified requirements of documents cited in sections A3, A4, and A5 of this standard practice, whether or not they are listed.

A.2.2 Government documents.

A.2.2.1 Specifications, standards, and handbooks. The following specifications, standards, and handbooks form a part of this document to the extent specified herein. Unless otherwise specified, the issues of these documents are those cited in the solicitation or contract.

COMMERCIAL ITEM DESCRIPTIONS

A-A-52081	-	Tape, Lacing and Tying, Polyester.
A-A-52083	-	Tape, Lacing and Tying, Glass.
A-A-59569	-	Braid, Wire (Copper, Tin-Coated, Silver-Coated, or Nickel Coated, Tubular. Or Flat)

(Copies of this document are available online at http://quicksearch.dla.mil/ or from the Standardization Document Order Desk, 700 Robbins Avenue, Building 4D, Philadelphia, PA 19111-5094.)

DEPARTMENT OF DEFENSE SPECIFICATIONS

MIL-PRF-24623	-	Splice, Fiber Optic Cable, General Specification for (Metric).
MIL-PRF-29504	-	Termini, Fiber Optic Connectors, Removable, General Specification for.
MIL-PRF-28876	-	Connectors, Fiber Optic Circular, Plug and Receptacle Style, Multiple Removable Termini, General Specification for.
MIL-PRF-64266	-	Connectors, Fiber Optic, Circular, Plug and Receptacle Style, Multiple Removable Genderless Termini, Environment Resisting General Specification For
MIL-DTL-83522	-	Connectors, Fiber Optic, Single Termini, General Specification for.

DEPARTMENT OF DEFENSE STANDARD

MS35489	-	Grommets, Synthetic and Silicone Rubber, Hot-Oil and Coolant Resistant.

(Copies of these documents are available online at http://quicksearch.dla.mil or from the Standardization Document Order Desk, 700 Robbins Avenue, Building 4D, Philadelphia, PA 19111-5094.)

A.2.2.2 Other Government documents, drawings, and publications. The following other Government documents, drawings, and publications form a part of this document to the extent specified herein. Unless otherwise specified, the issues of these documents are those cited in the solicitation or contract.

NAVAIR 01-1A-505-4/ T.O. 1-1A-14-4/ TM 1-1500-232-24-4	Installation and Testing Practices Aircraft and Fiber Optic Cabling.

Source: https://assist.dla.mil -- Downloaded: 2016-12-31T20:53Z
Check the source to verify that this is the current version before use.

NAVSEA DRAWING 7613069	-	JFOWG Recommended Fiber Optic Support Equipment List, Aircraft Applications

(A copy of this document is available online at: https://mynatec.navair.navy.mil. NATEC has three different processes to obtain the manual, depending on if you are Government personnel (military and civilians), Contractors with a Government contract, or everyone else. If unable to access this Web Site or require further assistance, contact (1) NATEC Customer Service: 619.545.1888, (2) NATEC Website Status Hotline: 619.545.1706, or (3) NATEC Customer Service E-mail: nani_customerservice@navy.mil.)

A.2.2.3 Non-Government publications. The following documents form a part of this document to the extent specified herein. Unless otherwise specified, the issues of these documents are cited in the solicitation or contract.

AEROSPACE INDUSTRIES ASSOCIATION

NAS43	-	Spacer, Sleeve – Screw and Bolt
NAS813	-	Cap - Protective, Electrical Connector
NAS820	-	Plug - Protective, Electrical Connector
NASM22529	-	Grommet, Edging.

(Copies of these documents can be obtained online at http://www.aia-aerospace.org or from Aerospace Industries Association of America, 1250 Eye Street, N. W., Suite 1200, Washington, DC, 20005-3924.)

SAE INTERNATIONAL

SAE AS21919	-	Clamp, Loop Type, Cushioned, Support-FSC 5340.
SAE AS23190	-	Straps, Clamps, and Mounting Hardware, Plastic and Metal for Cable Harness Tying and Support.

(Copies of these documents are available online at www.sae.org from SAE International, 400 Commonwealth Drive, Warrendale, PA 15096-0001, and Tel: 877-606-7323 [inside USA and Canada] or 724-776-4970 [outside USA], email at CustomerService@sae.org.)

A.2.3 Order of precedence. Unless otherwise noted herein or in the contract, in the event of a conflict between the text of this document and the references cited herein, the text of this document takes precedence. Nothing in this document, however, supersedes applicable laws and regulations unless a specific exemption has been obtained.

A.3 Definitions.

A.3.1 Bend diameter, minimum, short-term. The short-term bend diameter applies during handling and installing. The short-term bend diameter may be different for simplex tight buffer cable, for simplex loose tube cable, and for convoluted tube or conduit.

A.3.2 Bend diameter, minimum, long-term. The long-term bend diameter applies to the completed installation. The long-term bend diameter may be different for simplex, tight buffer cable, for simplex, loose tube cable, and for convoluted tube or conduit.

A.3.3 Cable, loose tube. A fiber optic cable design configured with one or more optical fibers fitted loosely within a tube, giving the optical fibers freedom to move. This mobility and isolation from the tube minimizes the effects of external forces on the performance of the link. The isolation allows cable expansion and contraction with temperature largely independent of the optical fibers.

Source: https://assist.dla.mil -- Downloaded: 2016-12-31T20:53Z
Check the source to verify that this is the current version before use.

A.3.4 Cable, tight buffer. A fiber optic cable design is one configured with an additional protective coding (additional buffer layer) is applied directly over a coated (buffered) fiber. Buffer material helps preserve the fiber's inherent strength and provides increased mechanical protection. A tight buffer cable allows cable placement in tighter bends, and rougher handling (such as better crush and impact resistance).

A.3.5 Chafing. Repeated motions between cabling components, between cabling and equipment or between cabling and the structure that result in wear causing mechanical failure or degraded or complete loss of the optical signal. Wear is the result of rubbing, excessive twisting or bending. Also, chafing may be defined in terms of poor installation practices, including: poor clamping, poor lacing, and poor routing. Cabling must be routed, clamped, and laced to prevent any contact with other equipment or structures.

A.3.6 End-to-end cabling path (fiber optic). The path light travels from the transmitter to the receiver. This path includes the connections up to the transmitting device, connections up to the receiving device, and one or more sections of fiber optic cable (such as one or more single segment, fiber optic cable harnesses).

A.3.7 Fiber optic cable bundle. Single fiber cables grouped together and secured by lacing tape. The cable bundle can be placed in convoluted tubing, used in various protected harness configurations or used as-is in an open cable harness configuration.

A.3.8 Hybrid cables. Cables that contain both optical fibers and metallic electrical conductors.

A.3.9 Maintenance breaks. Short pieces of replaceable cable assembly that are used between the ATC, LRC, LRM, LRU or WRA and the cable harness where the cabling is most susceptible to breakage.

A.3.10 Mixed fiber cables. Cables that contain more than one size or type of optical fiber.

A.3.11 Primary supports. Supports used to carry the weight and secure the fiber optic cable in its intended position by the use of metal cushion clamps will be in accordance with SAE AS21919 or SAE AS23190 (see A.4.4.1.1).

A.3.12 Secondary supports. Supports used to secure the cabling between primary supports and assist in carrying the weight. Lacing tape is used to provide the secondary support (see A.4.4.2.1).

A.4 Routing.

A.4.1 Externally induced loadings. Installed cable shall be routed to prevent axial, lateral, and torsion loads from being applied.

A.4.1.1 Maintenance and inspection. Fiber optic cabling shall be accessible for maintenance and inspections without the disturbance of hydraulic lines, other fluid lines, or where feasible, electrical wiring (see A.4.7).

A.4.1.2 Machinery removal. Fiber optic cabling route shall be located so that optical fiber cables will not be disturbed by disassembly or removal of machinery, including the removal of bolted or, welded equipment removal plates.

A.4.2 Cable slack. Sufficient cable slack shall be provided to perform required maintenance, to allow full extension of any vibration isolators or shock mounts, and prevent cable strain at points of bending and clamping.

A.4.2.1 Connector ends. Cable slack at the connector ends of the cabling (slack from the last primary support and the connector end) shall allow the cabling to extend from 12.7 mm (.5 inch) to a maximum of 25.4 mm (1 inch) beyond the point required for mating the connector. Drip loops, or additional cable slack for other means, shall not be provided at connector ends of the cabling.

A.4.3 Redundancy.

A.4.3.1 Separate routing for different operating conditions. For essential equipment in which there are separate normal and emergency operating conditions, the cable shall be routed separately for each of these two conditions.

REQUIREMENT 1101

Source: https://assist.dla.mil -- Downloaded: 2016-12-31T20:53Z
Check the source to verify that this is the current version before use.

A.4.3.2 Routing in separate cable harnesses. For networks that use dual or multiple redundant data transmission paths, the redundant cabling shall be routed in such a manner as to prevent loss of transmission along one data transmission path from preventing transmission along the other path or paths or paths. This shall be done by separate cable harnesses. If an exception is approved, this shall be done running the cabling in separate cable bundles within the same cable harness.

A.4.3.3 Routing in Severe Wind and Moisture Problems (SWAMP) areas. Optical fiber cable shall not be run through SWAMP areas unless such routing is necessary to provide survivability through redundant signal paths. In such cases, suitable optical fiber and suitable cable protection (to act as a moisture barrier) shall be provided.

A.4.3.4 Separation intervals. Redundant signal paths shall have these cables routed to separate network equipment, wherever practical.

A.4.3.4.1 General guidance. The cabling interconnecting network equipment and network equipment to end user equipment shall be separated in the athwart (side-to-side) platform direction to the maximum extent possible and vertically by this same general guidance. An optimal cable routing scheme is one designed to provide a quadrangular pattern to allow maximum athwart platform and vertical separation of cables for systems requiring alternate signal paths for reliability and survivability.

A.4.3.4.2 Equipment. Redundant local cable runs shall be separated for survivability as described herein except when they are within 1 m (3 ft) of the equipment.

A.4.3.4.3 Wheel well applications. Unless otherwise specified for wheel well applications, convoluted tubing shall be used to protect cables or cable bundles and shall be used as part of the construction of cable harnesses. Restrictions on drainage holes for convolution tubing used in fiber optic cabling applications shall conform to A.5.6.2. If convoluted tubing is not used, then an alternative means such as abrasion resistant tape or other type outer tubing shall be used.

A.4.3.4.4 Movable surfaces. Cabling shall be routed so that there is a twist instead of bend across hinges. Minimum separation between cabling and movable surfaces throughout the complete range of movement shall be at least 12.7 mm (.5 inch).

A.4.3.4.5 Fluid lines. Cabling shall be routed above tubing or piping carrying fluid (both liquid and gases). Separation distance of 12.7 mm (.5 inch) or greater shall be maintained. Where this requirement for routing separation cannot be achieved, requirements for exceptions shall be developed. Where cabling must be routed below tubing or piping carrying fluids, it shall be routed on an angle with, and not parallel, to the tubing or piping. Unless the cabling is in a rigid conduit or a barrier is placed between the cabling and the tubing or piping carrying fluid, a separation distance of 12.7 mm (.5 inch) or greater shall be maintained.

A.4.3.4.6 Fuel tanks. Cabling specified in Requirement 1102 shall not be routed through or used inside fuel tanks unless enclosed in a suitable conduit or other covering rated for continuous immersion in fuel. Components specified in Requirement 1102 are not intended for use in long term fluid immersion applications, in general, and for use in fuel tanks specifically.

A.4.4 Supports for routing cabling.

A.4.4.1 Primary supports. Metal cushion clamps shall be the only means used to provide primary support to the cabling.

A.4.4.1.1 Type. Metal cushion clamps shall be the means to provide primary support for the cabling, cable bundles, and cable harnesses. Metal cushion clamps shall conform to SAE AS21919 or to SAE AS23190. Band and cushion material combination codes CH and CJ are preferred for metal cushion clamps conforming to SAE AS21919. Metal cushion clamps to SAE AS23190 shall be the ones conforming to SAE AS23190/4.

A.4.4.1.2 Clamping intervals. Spacing intervals between primary supports shall not exceed 60.96 cm (24 inches). When the cabling, cable bundles or harness is a part of or placed in rigid tubing/conduit, then spacing intervals may be extended, but shall not exceed 106.68 cm (42 inches).

REQUIREMENT 1101

Source: https://assist.dla.mil -- Downloaded: 2016-12-31T20:53Z
Check the source to verify that this is the current version before use.

A.4.4.1.3 Use of standoffs for cable deflections allotments. Standoffs (also referred to as spacers) shall conform to NAS43. The depth of these standoffs shall be as short as practicable to allow a 12.7 mm (.5 inch) cable deflection without contacting the structure or mounting surface.

A.4.4.2 Secondary supports. Lacing tape shall be the only means used to provide secondary support to the cabling. Lacing tape used as secondary supports is also referred to as tying tapes, lacing ties, or ties. The term "spot ties" becomes appropriate when lacing tape is used to separate a number of fiber optic cables or cable bundles within a cable harness or convoluted tubing (as a separator and not a means to secure).

A.4.4.2.1 Type. Lacing tape shall conform to finish C, tying tape, sizes 2 or 3, in accordance with A-A-52083, for use in low to high vibration and/or high temperature environments (glass tying tape), or with A-A-52081, for use in only low vibration environments (polyester tying tape).

A.4.4.2.2 Lacing intervals. Where the primary supports are more than 30.48 cm (12 inches) apart, lacing (space) ties shall be placed as secondary supports 30.48 cm (12 inches) or less apart. Distance between secondary supports shall be 76 mm (3 inches) for cabling installed in flight-testing applications. For an application, reference may be made to NAVAIR 01-1A-505-4/T.O. 1-1A-14-4/TM 1-1500-323-24-4 WP 010 00 paragraph 65.

A.4.4.2.3 Lacing process for secondary support. The process to apply lacing tape to cabling for a secondary support shall be as specified below. First tie a clove hitch with the lacing tape followed by a square knot. Complete the second part of the square knot with an extra loop. Trim the free ends of the lacing ties to 9.53 mm (.375 inch) minimum. The lacing shall be snug, not clinched tight, so that the lacing does not locally stress the cable causing possible short or long term failure to the cabling.

A.4.4.2.4 Lacing intervals at a mechanical splice. One lacing tie shall be placed 12.7 mm (.5 inch) from the middle of the mechanical splice along the longitudinal axis (z axis). A second lacing tie shall be placed 12.7 mm (.5 inch) from the middle of the mechanical splice from the other end. If the middle of the mechanical splice is affixed to a cable clamp, then place the lacing ties on the mechanical splice prior to fastening the cable clamp (primary support). Affixing the mechanical splice in the middle of/underneath a cable clamp is less preferred and shall be done only if the location does not provide an alternative solution.

A.4.4.2.5 Continuous lacing. Continuous lacing shall not be used either for the secondary support of fiber optic cabling or for other applications (such as separation of cable bundles) on fiber optic cabling.

A.4.5 Anti-chafing measures. Measures shall be taken to prevent chafing due to repeated motions (rubbing, excessive twisting or bending) between cabling components, between cabling and equipment (including at edges), between cabling and the structure (including at edges) that result in wear causing mechanical failure or degraded or complete loss of the optical signal. Measures taken to prevent chafing shall include proper routing, clamping as defined in A.3 and as specified along with other measures including those specified in A.4.4, A.4.5.1, A.4.5.2, and A.5.5.

A.4.5.1 Use of convoluted tubing. Convoluted tubing shall conform to Requirement 1102. Also, refer to subordinate Work package WP 011 01 of NAVAIR 01-1A-505-4/T.O. 1-1A-14-4/TM 1-1500-323-24-4.

A.4.5.2 Routing through cutouts. When cables, cable bundles and cable harnesses are routed through cutouts in the platform structure, then clamps and grommets shall be used as an anti-chafing measure.

A.4.5.2.1 Metal cushion cable clamps. Clamps used shall be the same as the primary supports specified in A.4.5.

Source: https://assist.dla.mil -- Downloaded: 2016-12-31T20:53Z
Check the source to verify that this is the current version before use.

A.4.5.2.2 Grommets. Grommets shall be used when the radial distance between the cabling and the structure or equipment has a separation of 9.53 mm (.375 inch) or less. Either donut grommets or caterpillar grommets shall be used. When the donut grommet is split and for caterpillar grommets, the split shall be a diagonal cut that leaves a gap at the split ends no wider than 1.60 mm (.063 inch). The gap in the grommet shall be located opposite to the side cabling deflection is most likely to occur.

A.4.5.2.2.1 Donut grommets. Donut grommets shall conform to MS35489.

A.4.5.2.2.2 Caterpillar grommets. Caterpillar grommets shall conform to NASM22529. These caterpillar grommets shall not be used on holes sizes in which the diameter is less than 50.8 mm (2 inches).

A.4.6 Use of maintenance breaks (see A.3.9).

A.4.6.1 Locations. Maintenance breaks shall be used to provide remove and replace subassemblies at locations likely to see high maintenance and corresponding high likelihood of maintenance induced failures.

A.4.6.2 Cabling length. Cabling for the maintenance breaks shall be between 152.4 mm (6 inches) to 457.2 mm (18 inches). Longer lengths are permitted if needed to meet the other installation requirements in Requirement 1101. A recommended common length is preferred to minimize the number of replacement configurations that need to be logistically supported.

A.4.7 Maintenance actions.

A.4.7.1 Equipment removal. Cable routing shall be designed to minimize the requirement to mate and de-mate fiber optic connectors for the removal of equipment.

A.4.7.2 Other maintenance. Cable routing shall be designed to minimize the requirement to mate and de-mate fiber optic connectors to facilitate maintenance of other systems or equipment.

A.4.7.3 No disturbance of structural bonds. Routing shall be designed such that repair does not require disturbing any riveted or bonded attachments.

A.4.7.4 Maintenance environment. Maintenance actions involving fiber optic components shall be capable of being performed within the environmental constraints specified in 4.3, Requirement 1102 of MIL-STD-1678-1.

A.5. Specific practices. Installation shall be performed in accordance with A.5.1 through A.5.11.

A.5.1 Minimum bend diameter, short term. Minimum short term bend diameter shall not exceed (i.e., not be less than) during handling and installation.

A.5.1.1 Cabling. Unless otherwise specified in the particular military standard or specification for the cabling, minimum bend diameter shall not be greater than (i.e., not have a cable diameter smaller than) 8 times the cable diameter (four times the cable diameter if working in terms of cable bend radius). For loose tube cabling, the requirement specified for tubing shall be used in lieu of cabling.

A.5.1.2 Tubing. Unless otherwise specified in the particular military standard or specification for the tubing, minimum bend diameter shall not be greater than (i.e., not have a cable diameter smaller than) 20 times the tubing diameter (12.7 mm (.5 inch) diameter loose tube cable results in a 40 mm (1.6 inch) cable bend diameter).

A.5.2 Minimum bend diameter, long term. Minimum long term bend diameter shall not exceed (i.e., not be less than) for the completed installation.

Source: https://assist.dla.mil -- Downloaded: 2016-12-31T20:53Z
Check the source to verify that this is the current version before use.

A.5.2.1 Cabling. Unless otherwise specified in the particular military standard or specification for the cabling, minimum bend diameter shall not be greater than (i.e., not have a cable diameter smaller than) 16 times the cable diameter (8 times the cable diameter if working in terms of cable bend radius). For loose tube cabling, the requirement specified for tubing shall be used in lieu of cabling.

A.5.2.2 Tubing. Unless otherwise specified in the particular military standard or specification for the tubing, minimum bend diameter shall not be greater than (i.e., not have a cable diameter smaller than) 20 times the tubing diameter (12.7 mm (.5 inch) convoluted tubing diameter results in a 254 mm (10 inch) cable bend diameter).

A.5.3 Segregate fiber optic from electrical cables.

A.5.3.1 Within cabling. Fiber optic cables shall not be mixed with electrical cables within the same cable bundle or within the same cable harness.

A.5.3.2 Connection points. Fiber optic termini shall not be mixed with electrical contacts within the same multiple termini connector.

A.5.3.3 Exception to cabling segregation. Cabling exiting the platform, such as the pylons on an aircraft, where only one connection is possible, may be hybrid cabling (contain cables with both optical fibers and metallic conductors) with a connection containing both fiber optic termini and electrical contacts. Where an exception is approved and fiber optic cables are mixed with electrical cables, the cable harness shall be categorized and marked as a fiber optic cable harness (see Requirement 1104).

A.5.3.4 Segregation of cabling with different fiber types. Unless otherwise specified, no mixed fiber cabling shall be used (cabling that contain more than one size or type of optical fiber).

A.5.4 Use of preservatives on fiber optic connectors. Preservatives (including corrosion prevention compounds (CPC) and lubricants) shall not be placed on fiber optic connectors.

A.5.5 Locations with special requirements. Optical fiber cable shall be located to avoid physical interference with electric cables and equipment and to minimize risk of battle damage.

A.5.5.1 Interference. Cable runs shall be located so that optical fiber cables will not be disturbed by disassembly or removal of machinery, including the removal of bolted or welded equipment removal plates. Cabling shall be accessible for maintenance and inspections without the disturbance of electrical, hydraulic, or other fluid lines.

A.5.5.2 Severe Wind and Moisture Problems (SWAMP). Cabling shall be protected in convoluted tubing. Other means may be employed, but shall be done in a manner to prevent degradation by the environment, excessive twisting and bending at hinges and other openings, and relative movement (such as flexing, pulling, abrasion, and twisting) at movable surfaces. For example, on an aircraft, these areas include wheel wells, near wing flaps, wing folds and pylons.

A.5.6 Convoluted tubing. Cabling shall be placed in convoluted tubing. When a protective tube is specified, the protective tube shall be convoluted tubing. Clear or semi-transparent convoluted tubing is preferred.

A.5.6.1 Drip loops. Drip loops shall not be placed in cabling between the last primary support and the connector end.

A.5.6.2 Drainage holes. Drainage holes shall not be placed in convoluted tubing at the low points in the tubing run and at any trap points after the convoluted tubing has been installed. Pre-perforated convoluted tubing is preferred.

A.5.7 Connectors. Selection of multiple termini connectors shall conform to those specified in Requirement 1102.

A.5.7.1 Applicability. Connectors shall be used at locations required to affix cabling to equipment, join different segments of cabling, and where disconnection is required for maintenance and inspection actions.

REQUIREMENT 1101

Source: https://assist.dla.mil -- Downloaded: 2016-12-31T20:53Z
Check the source to verify that this is the current version before use.

A.5.7.2 Minimum spacing for circular connector mating operations. A minimum clearance of 25.4 mm (1 inch) around 270 degrees of the diameter shall be provided around the connector plug coupling nut (coupling nut that mates the connector plug to the connector receptacle). Where this requirement cannot be met, connector plug attachment and removal using only common hand technique shall be demonstrated and successfully performed. Where this requirement cannot be met (and removal must be demonstrated and successfully performed), the fiber optic connector shall be placed so that it is the last one off and the first one on.

A.5.7.3 Separate measures to prevent cross mating. Fiber optic connectors used to provide separation of circular, multiple termini connectors with fiber optic cabling in the same location shall be installed so that it will be impossible to mate the wrong connector in another mating unit. When more than one connector is used at the same location, connector selection shall be implemented in the order listed in A.5.7.3.1 through A.5.7.3.3. This ordering is done to limit/standardize on connector configurations that must be supported logistically. Coding of the identical configured connectors (such as color coding) versus positive prevention measures for improper mating shall not be used.

A.5.7.3.1 Shell size. Use alternative shell sizes (to accommodate differences in number of cables in each cable harness).

A.5.7.3.2 Insert cavity arrangement. Use alternative insert with different cavity arrangement (number of cavities) where alternative insert arrangements are available for a specified shell size.

A.5.7.3.3 Keying positions. Use alternative keying positions.

A.5.7.4 Standardize keyway positioning. Connector installed with the longitudinal axis (axis parallel to the cabling length) in a horizontal direction shall have the master keyway positioned at the top. Connector installed with the longitudinal axis (such as axis parallel to the cabling length) in a vertical direction shall have the master keyway positioned facing the front of the platform.

A.5.7.5 Positioning for drainage. Positioning shall be done so that, when unmated, any condensate or fluid does not collect into but drains out of the connector receptacle. Connectors shall not be positioned or mounted either in standing water or at a site to gather standing water.

A.5.7.6 Insert configuration. The connector receptacle for multiple termini connectors shall contain the inserts for socket termini. When the multiple termini connector has the insert for the pin terminus configuration only, then retention of the alignment sleeves shall be done in the connector receptacle. Connectors with only fiber optic pin termini, whose mating connector have the alignment sleeves built-in, must use special contacts with a shorter pin to preclude damage to the mating termini.

A.5.7.7 Fully populated inserts. Empty cavities in the connector insert shall be filled with dummy (fiber optic) termini. For a MIL-DTL-38999 series III connector, sealing plugs (at the rear grommet) alone may be used in lieu of dummy termini (with sealing plugs) in empty cavities.

A.5.7.8 Sealing. Sealing material (such as gaskets and o-rings) shall be used on the connector receptacle flange when sealing is required on the mounting surface. For flange mounting connector receptacles, fasteners shall be placed in and secured in all holes of the mounting flange.

A.5.7.9 Placement. Design of the system shall minimize the number of times each connector mated pair needs to be mated and de-mated.

A.5.7.10 EMI protection. If the system interfacing with the fiber optic cabling requires EMI protection, EMI shielding for the fiber optic cabling can be addressed with an approved conductive gasket/grommet or with metal braid sleeve in accordance with A-A-59569.

Source: https://assist.dla.mil -- Downloaded: 2016-12-31T20:53Z
Check the source to verify that this is the current version before use.

A.5.8 Dust cover requirements for multiple termini connectors. Measures shall be taken to protect the connector interior and termini of unmated connectors from contamination (such as dust and fluids).

A.5.8.1 Supply as part of connector. Dust covers shall be provided with and affixed to each connector plug, each connector receptacle, and each connector dummy connector receptacle regardless whether the connector is part of the cabling or part of the equipment.

A.5.8.1.1 Dust cover attachment. Dust cover shall consist of a metal cap with lanyard (or composite cap with lanyard, as applicable). The lanyard shall be the means used to affix the dust cover to the connector.

A.5.8.2 Dust protection during production. Through production (except when uncovered for assembly operation) unmated connectors shall be suitably covered. Plastic dust caps such as those conforming to SAE AS85049/138, NAS813, and NAS820 may be used for this purpose.

A.5.9 Dummy stowage receptacles.

A.5.9.1 Locations. Dummy stowage receptacles shall be provided adjacent to equipment.

A.5.9.2 Usage.

A.5.9.2.1 Maintenance action. Dummy stowage receptacles shall be used to secure connector plugs when unmated from the equipment

A.5.9.2.2 Future use. Dummy connector receptacles shall be used to secure connector plugs when cabling has been installed prior to an application intended for future test or permanent installation. As a less preferred alternative, the same cable clamps specified for primary support may be used to secure the connector plug; however, a dummy connector receptacle shall be installed as part of the permanent installation (with the equipment) if not sooner.

A.5.10 Cable assembly. Cable assembly configurations and construction/installation shall be performed in accordance with WP 011 of NAVAIR 01-1A-505-4/T.O. 1-1A-14-4/TM 1-1500-323-24-4.

A..5.11 Splicing restrictions. Splicing shall not be allowed on platforms unless specified explicitly as part of the maintenance concept and included as part of the loss budget. On platforms permitting splicing, the restrictions cited in A.5.11.1 through A.5.11.5 shall apply.

A.5.11.1 Number of splices. These shall be no more than two splices on any end-to-end cabling path (see A.3.6).

A.5.11.2 Location. Splices shall be located on the cabling at a position that is readily accessible for maintenance and inspection, that will not cause congestion effecting maintenance access, and that will not prevent cabling from being replaced in the designated routing location. No splice should be placed in a cabling run (segment) of 0.91 m (3 ft) or less. Replace instead of repair (splice) in these short cable segments when practical. Likewise, splicing closer than 45 cm (18 in) from the connector is not recommended.

A.5.11.3 Location near a connector. Splicing shall be allowed only within 457 mm (18 in) or less from the connector. Splicing is the preferred repair method at this location. Provision of a 457 mm (18 in) pre-terminated pigtail is recommended.

A.5.11.4 Location relative to multiple panel removals. If replacing segment requires multiple panel removals, then default shall be to a splice repair strategy to achieve aircraft operational in the specified timeframe.

A.5.11.5 Location relative to a cable clamp. Mechanical splice location relative to a cable clamp shall conform to A.4.4.2.4.

A.5.12 Support equipment. Support equipment used for ferrule end face cleaning and inspection; for termination of connectors and termini; and for test, troubleshooting and repair of fiber optic components and systems shall be as specified in MIL-STD-1678-6.

REQUIREMENT 1101

Source: https://assist.dla.mil -- Downloaded: 2016-12-31T20:53Z
Check the source to verify that this is the current version before use.

REQUIREMENT 1102

FIBER OPTIC CABLING COMPONENTS

1. Purpose. This requirement specifies the components to be used in the assembly (such as fabrication) of fiber optic cable bundles and cable harnesses. This requirement is intended for developmental, prototype, production, rework, and modification programs on military platform fiber optic cable assemblies.

2. Applicable documents.

2.1 General. The documents listed in this section are specified in sections 3, 4, and 5 of this standard practice. This section does not include documents cited in other sections of this standard practice or recommended for additional information or as examples. While every effort has been made to ensure the completeness of this list, document users are cautioned that they must meet all specified requirements of documents cited in sections 3, 4, and 5 of this standard practice, whether or not they are listed.

2.2 Government documents.

2.2.1 Specifications, standards, and handbooks. The following specifications, standards, and handbooks form a part of this document to the extent specified herein. Unless otherwise specified, the issues of these documents are those cited in the solicitation or contract.

DEPARTMENT OF DEFENSE SPECIFICATIONS

MIL-PRF-29504 - Termini, Fiber Optic Connector, Removable, General Specification for.

MIL-DTL-38999 - Connectors, Electrical Circular, Miniature, High Density, Quick Disconnect (Bayonet, Threaded and Breech Coupling), Environment Resistant, Removable Crimp and Hermetic Solder Contacts, General Specification For.

MIL-PRF-64266 - Connectors, Fiber Optic, Circular, Plug and Receptacle Style, Multiple Removable Genderless Termini, Environment Resisting General Specification For.

MIL-DTL-81706 - Chemical Conversion Materials For Coating Aluminum and Aluminum Alloys.

(Copies of these documents are available online at http://quicksearch.dla.mil or from the Standardization Document Order Desk, 700 Robbins Avenue, Building 4D, Philadelphia, PA 19111-5094.)

2.2.2 Other Government documents, drawings, and publications. The following other Government documents, drawings, and publications form a part of this standard practice to the extent specified herein. Unless otherwise specified, the issues are these documents are those cited in the solicitation or contract.

NAVSEA Drawing 8329100 - Recommended Fiber Optic Components Parts List, Aircraft Applications.

(A copy of this document is available online at: https://mynatec.navair.navy.mil. NATEC has three different processes to obtain the manual, depending on if you are Government personnel (military and civilians), Contractors with a Government contract, or everyone else. If unable to access this Web Site or require further assistance, contact (1) NATEC Customer Service: 619.545.1888, (2) NATEC Website Status Hotline: 619.545.1706, or (3) NATEC Customer Service E-mail: nani_customerservice@navy.mil.)

2.2.3 Non-Government publications. The following documents form a part of this document to the extent specified herein. Unless otherwise specified, the issues of these documents are cited in the solicitation or contract.

ASTM INTERNATIONAL

ASTM-B733 - Metal, Autocatalytic Electroless Nickel-Phosphorus Coating on.

(Copies of these documents are available online at http://www.astm.org or from the ASTM International, P.O. Box C700, 100 Barr Harbor Drive, West Conshohocken, PA 19428-2959.)

Source: https://assist.dla.mil -- Downloaded: 2016-12-31T20:53Z
Check the source to verify that this is the current version before use.

SAE INTERNATIONAL

SAE-AMS-QQ-P-416	-	Plating, Cadmium (Electrodeposited).
SAE-AMS-2404	-	Nickel, Electroless, Plating.

(Copies of these documents are available online at www.sae.org from SAE International, 400 Commonwealth Drive, Warrendale, PA 15096-0001, and Tel: 877-606-7323 [inside USA and Canada] or 724-776-4970 [outside USA], email at CustomerService@sae.org.)

2.3 Order of precedence. Unless otherwise noted herein or in the contract, in the event of a conflict between the text of this document and the references cited herein, the text of this document takes precedence. Nothing in this document, however, supersedes applicable laws and regulations unless a specific exemption has been obtained.

3. Definitions.

3.1 Cable, fiber optic. A fiber optic cable is a cable that contains optical fibers. The cable may be of a tight buffer or a loose tube design.

3.2 Connector, fiber optic. A device that permits repeated mating and couples the optical power between two optical fibers or two groups of optical fibers. A fiber optic connector must maintain fiber alignment without significant loss of optical power.

3.3 Connector, LC. The Lampert connector or Lucent connector (LC) is a single ferrule connector with a 1.25 mm (.05 inch) ferrule diameter, a push-pull style attachment configuration to the mating LC-to-LC adapter/patch panel or equipment interface port, and a butt-jointed connector design. The LC connector has a small form factor configuration that has the same footprint as a RJ-45 receptacle.

3.4 Optical fiber. An optical fiber is a thin cylindrical dielectric (non-conductive) waveguide used to send light energy for communication. Optical fibers consist of three parts: the core, the cladding, and the coating or buffer. The choice of optical fiber materials and fiber design depends on operating conditions and intended application.

3.5 Optical fiber, multimode. A multimode optical fiber is one that supports the propagation of more than one bound mode (electromagnetic wave).

3.6 Optical fiber, single mode. A small core optical fiber where one bounded electromagnet wave of light will propagate at the wavelength of interest.

3.7 Splice. A splice is a permanent (as opposed to mateable) fiber joint that connects two optical fibers and exhibits low loss optical performance. A means to repair optical fibers damaged during installation, accident, or stress. Two broad types of splices are mechanical and fusion.

3.8 Splice, fusion. Two optical fibers are melted or fused together by means of a fusion splice apparatus using such methods as electric arc, laser, or gas flame.

3.9 Splice, mechanical. A device in which two optical fibers are held in alignment for an indefinite period without movement by means of a mechanical fixture (such as a tube, capillary, rods, or v-groove substrate). Precision cleaves on the fiber ends and index matching fluid is used as two measures to ensure low optical loss.

4. Requirements.

4.1 Connectors.

4.1.1 Plating types. Plating types acceptable currently, those anticipated to be specified in the near term and those anticipated to be specified long term, are listed in 4.1.1.1 through 4.1.1.3. Acceptable plating types shall be electrically conductive.

REQUIREMENT 1102

Source: https://assist.dla.mil -- Downloaded: 2016-12-31T20:53Z
Check the source to verify that this is the current version before use.

4.1.1.1 Current acceptable plating type. When mounting the connector directly to an aluminum or other non-titanium structure or equipment with no insulator in-between, cadmium plating in accordance with SAE AMS-QQ-P-416 with a hexavalent post treatment in accordance with MIL-DTL-81706 type I, class 3 shall be used. When mounting the connector directly to a titanium structure or equipment with no insulator in-between, electroless nickel plating in accordance with ASTM-B733 or SAE-AMS2404 shall be used (cadmium plating in direct contact with titanium is prohibited). Connectors used on titanium structures or equipment shall not be aluminum (composite connectors with electroless nickel plating is acceptable).

4.1.1.2 Near term acceptable plating type. In addition to the plating type cited in 4.1.1.1, one alternative plating is currently being investigated as an environmentally preferred plating. Restrictions on acceptance include that the alternative plating will provide performance equal to or better than that of cadmium plating cited in 4.1.1.1. Also, acceptance is contingent upon having no corrosion products flaking from the connector as part of the corrosion process.

4.1.1.3 Far term acceptable plating type. Requirement 1102 will be revised after results of the near term plating candidate is known.

4.1.2 Acceptable connectors for fiber optic applications.

4.1.2.1 Connectors with termini only (no electrical contacts). Connectors for new platforms and new applications on existing platforms shall conform to MIL-PRF-64266. Connectors for existing applications on existing platforms shall conform to either MIL-PRF-64266 or to MIL-DTL-38999, Series III. Connectors conforming to MIL-PRF-64266 have been designed strictly for fiber optic applications (tighter tolerance or facilitated terminus cleaning); therefore, they are the preferred connector for dedicated fiber optic use.

4.1.2.2 Connectors with both termini and electrical contacts. Connectors shall conform to MIL-DTL-38999, Series III. See A.5.3 in Requirement 1101, appendix A for exceptions to not mixing fiber optic cables with electrical cables.

4.1.2.3 Termini used for MIL-PRF-64266 connector. The MIL-PRF-29504/20 terminus shall be used.

4.1.2.4 Termini used with MIL-DTL-38999 connector. The MIL-PRF-29504/4 pin terminus and the MIL-PRF-29504/5 socket terminus shall be used.

4.2 Other fiber optic components.

4.2.1 Current status. Specification sheets or other requirements documents for other fiber optic components are currently being prepared or are slated for preparation with specific requirements for harsh environments (-55°C to +165°C temperature range).

4.2.2 Parts list. Fiber optic components (parts) to be used for aircraft applications shall be selected from the MIL-STD-1678-6 parts listing.

4.2.2.1 Applicability. This recommended parts list has components that are intended to be placed on a Qualified Products List (QPL), and commercial components with sufficient results to be recommended for use on platforms.

4.2.2.2 Updates. Entries will be updated as new components and new manufacturers for existing components are qualified in future revisions of MIL-STD-1678-6.

REQUIREMENT 1102

Source: https://assist.dla.mil -- Downloaded: 2016-12-31T20:53Z
Check the source to verify that this is the current version before use.

4.2.2.3 Restrictions on use. Once a vendor is qualified for a particular component to a military specification, that component shall only be obtained through the qualified source(s).

4.2.2.4 Advantages of use. Components contained in MIL-STD-1678-6 parts listing are intended to be supported by JFOWG initiated standardization and logistics plans and do not require redundant logistics document development. As components qualify through the Qualified Products List (QPL) process, effort will be made by the applicable Logistics Manager to place these components in the military stock system inventory.

4.3 Maintenance environment. Fiber optic components shall be selected for which maintenance actions can be performed under the specified environmental and support equipment constraints. Maintenance actions involving fiber optic components shall be able to be performed within the temperature range of -10°C to 55°C (-14°F to 131°F) using the support equipment specified by A.5.12 in Requirement 1101 of MIL-STD-1678-1 (see 6.3). Performance of maintenance functions or actions in and outside of this environment would be determined by the Commanding or Maintenance officer in charge (see 6.3).

5. Implementation. Specifications, specification sheets, or requirement documents are being prepared for the other fiber optic cable components with the intent to standardize on these components for new platforms and new networks/applications for existing platforms. Requirements for these components shall be incorporated into system design to the maximum extent feasible.

5.1 Military components. Each component listed in table 1102-I for which there is a fiber optic component military specifications shall conform to the military specification. For the other components listed, the MIL-STD-1678-6 parts listed shall be used. For components in which a military specification is cited, however, no components are qualified to date, the MIL-STD-1678-6 parts listed shall be used.

TABLE 1102-I. Fiber Optic Cabling Components.

Fiber optic component	Military specification	MIL-STD-1678-6 requirement
Backshell, solid	MIL-PRF-64266	6015
Backshell, split	MIL-PRF-64266	6106
Cable, single fiber	MIL-PRF-85045/31	6201
Connector wrap	NONE	6109
Connector, multiple termini, legacy applications only	MIL-DTL-38999	6101
Connector, multiple termini, legacy new applications	MIL-DTL-64266	6101
Convoluted tubing	NONE	6104
EMI rentention nut	MIL-PRF-64266	6107
Epoxies, two part, heat cured	NONE	6103
Index matching gel or material	NONE	6103
Mechanical splice	MIL-PRF-24642/7	NONE
Termini for MIL-DTL-38999 connector, for legacy applications only	MIL-PRF-29504/4 & /5	6101
Terminus for MIL-PRF-34266 connector	MIL-PRF-64266/20	6101
UV adhesive	NONE	6103

5.2 Military connectors. Connector selection shall take into account the impact of connector mechanical alignment on optical performance as specified in appendix A.

6. NOTES.

6.1 Lessons learned.

6.1.1 Use proven components. Use fiber optic components from military specifications once these components become available. In the near term, use fiber optic components specified in MIL-STD-1678-6. This avoids having to relearn past experiences which have been addressed and resulted in the current recommended components.

6.1.2 Secure cabling at rear of connectors. Use back shells as the means to secure cabling at the back of the connector.

Source: https://assist.dla.mil -- Downloaded: 2016-12-31T20:53Z
Check the source to verify that this is the current version before use.

6.1.3 Preferred construction of cable harness or protection for cable runs. Use convoluted tubing as the means to protect the fiber optic cables and cable bundles in both a protected cable harness configuration and for cabling runs within an open cable harness. Use clear or semi-transparent convoluted tubing. Use convoluted tubing made from FEP (fluorinated ethylene propylene) for general use. Use convoluted tubing made from PEEK (polyether-ether-ketone) for intra-cabin applications requiring low smoke and zero halogen fire emissions.

6.2 Intended use. On these platforms, the fiber optic cable assemblies intended to be inspected include (1) cable harnesses, (2) line and weapons replaceable avionics boxes with internal fiber optics, (3) circuit card modules and assemblies with internal fiber optics, (4) fiber optic test jumpers, and (5) other miscellaneous cabling.

6.3 Maintainer environment: Maintainers in the field are expected to perform a repair or other maintenance action utilizing this fiber optic component (as part of a fabrication/installation) in an environment within the temperature range of -10°C to 55°C (14°F to 131°F). Conditions for performing maintenance functions or actions in and outside of this environment would be determined by the Commanding or Maintenance officer in charge of the ship/base/station/ fort prior to commencing any work orders. These extreme conditions necessitate the fiber optic component be kept in a “maintainer environment” and exposed outside this environment only at the step in which the component is installed on the fiber optic cable.

Source: https://assist.dla.mil -- Downloaded: 2016-12-31T20:53Z
Check the source to verify that this is the current version before use.

APPENDIX A

Impact of connector mechanical alignment on optical performance: Differences between MIL-DTL-38999 and MIL-PRF-64266

A.1 Purpose. This appendix provides criteria that are to be included for assessing the impact of connector mechanical alignment on optical performance during the multiple terminus connector selection.

A.2 Applicable documents.

A.2.1 General. The documents listed in this section are specified in sections A.3, A.4, and A.5 of this standard practice. This section does not include documents cited in other sections of this standard practice or recommended for additional information or as examples. While every effort has been made to ensure the completeness of this list, document users are cautioned that they must meet all specified requirements of documents cited in sections A.3, A.4, and A.5 of this standard practice, whether or not they are listed.

A.2.2 Government documents.

A.2.2.1 Specifications, standards, and handbooks. The following specifications, standards, and handbooks form a part of this document to the extent specified herein. Unless otherwise specified, the issues of these documents are those cited in the solicitation or contract.

DEPARTMENT OF DEFENSE SPECIFICATIONS

MIL-DTL-38999 – Connectors, Electrical Circular, Miniature, High Density, Quick Disconnect (Bayonet, Threaded and Breech Coupling), Environment Resistant, Removable Crimp and Hermetic Solder Contacts, General Specification For.

MIL-PRF-64266 – Connectors, Fiber Optic, Circular, Plug and Receptacle Style, Multiple Removable Genderless Termini, Environment Resisting General Specification For.

(Copies of these documents are available online at http://quicksearch.dla.mil or from the Standardization Document Order Desk, 700 Robbins Avenue, Building 4D, Philadelphia, PA 19111-5094.)

A.2.3 Order of precedence. Unless otherwise noted herein or in the contract, in the event of a conflict between the text of this document and the references cited herein, the text of this document takes precedence. Nothing in this document, however, supersedes applicable laws and regulations unless a specific exemption has been obtained.

A.3 Definitions.

A.3.1 Connector polarization. The means used to allow or prevent the mating of a connector plug to a connector receptacle of the same military specification and shell size. The connectors are “polarized” to allow or prevent mating of connector plugs with connector receptacles by placing polarization keys into the connector shell (and corresponding keyways in the mating connector shell).

Source: https://assist.dla.mil -- Downloaded: 2016-12-31T20:53Z
Check the source to verify that this is the current version before use.

A.3.2 Connector probe. A single fiber MQJ is configured with a connector at one end to mate with the test equipment and a “test probe” at the other end. The test probe is referred to in this document as a “connector probe”. This connector probe is inserted into the cavity of a test probe adapter. The test probe adapter is referred to in this document as a “connector probe adapter”.

A.3.3 Connector probe adapter. An adapter that mates with the multiple termini connector plug or the connector receptacle under test and that contains the insert cavity configuration to mate with and lock a connector probe in-place.

A.3.4 Measurement Quality Jumper (MQJ). The Measurement Quality Jumper (MQJ) is a low loss jumper that is used with test equipment to perform optical loss measurements. The MQJ must meet stringent optical loss requirements to ensure accuracy of measurements performed. Measurements must be accurate and repeatable. The accuracy and repeatability of your measurement is only as good as your MQJ. As the MQJ degrades with use, so does the measurement accuracy. The MQJ consists of a single fiber cable with a connector at one end which mates to the test equipment (optical source and power meter) and a connector at the other end which mates to the link/segment under test.

A.4 Background considerations, connector alignment. For a fiber optic, multiple termini connector; the design shall include a two and preferably three stage mechanical alignment. A first stage, course alignment is accomplished by the polarization keys. A second stage, fine alignment is accomplished with guide pins. A third stage, very precise alignment is accomplished use of alignment sleeves between the two mating termini ferrules. All three stages work in conjunction to achieve the alignment required for acceptable optical performance. A final alignment stage (not addressed in this appendix), namely keying of the terminus, is used when orientation of the optical fibers across the optical interface is required, such as for polarization maintaining fibers.

a. Polarization keys. Connector polarization is the means used to allow or prevent the mating of a connector plug to a connector receptacle of the same military specification and shell size. The connectors are “polarized” to allow or prevent mating of connector plugs with connector receptacles by placing polarization keys into the connector shell (and corresponding keyways in the mating connector shell). There are either one or two master (primary and secondary) polarization keys that are common to all connector configurations within the same military specification. There are one to four clocking keys for each polarizing position with a defined angle from the master (primary) polarization key. Connector plugs and receptacles only with the same angular alignment of all keys (same polarization) can mate. Specifying connectors with different polarizations prevent mating a connector plug to the wrong connector receptacle when there are multiple connector receptacles on the equipment module or panel.

b. Guide pins. Fiber optic connectors have guide (or alignment) pins that are used to further (more precisely) align the mating connector halves. This fine alignment (as opposed to the polarization key course alignment) further limits rotation and terminus misalignment. The result is minimizing occurrences of cracked alignment sleeve and better optical performance.

c. Number of clocking key positions. Each connector is configured with multiple clocking positions.

(1) MIL-DTL-38999 connector. There are 6 clocking positions for this connector. These clocking positions are designated as N (normal), A, B, C, D and E. For each clocking position, there is a master (main) key and four clocking keys. The master key is always in the 12 o’clock position. The four clocking keys are at different angles around the inside shell circumference for each of the 6 different clocking positions. There are only 6 possible permutations for the clocking positions (N, A, B, C, D and E).

(2) MIL-PRF-64266 connector. There are 12 clocking positions for this connector. These clocking positions are designated as 1 through 9 and A, B and C. For each clocking position, there is a master primary polarization key in the 12 o’clock position, a master secondary polarization key in the 6 o’clock position and a clocking key. The clocking key is at different angles around the inside shell circumference for each of the 12 different clocking positions. There are only 12 possible permutations for the clocking positions (1 through 9 and A, B and C).

Source: https://assist.dla.mil -- Downloaded: 2016-12-31T20:53Z
Check the source to verify that this is the current version before use.

A.5 Comparison of MIL-DTL-38999 and MIL-PRF-64266 connector alignments. The analysis in A.5.3 shall be considered for two stages and three stages of mechanical alignment in A.5.a and A.5.b, respectively.

a. MIL-DTL-38999 Series III connector. This connector has one master key and four clocking keys. There are no guide pins as this connector is designed as an electrical connector (to which MIL-PRF-29504/4 &/5 fiber optic termini can be inserted). For an electrical connector, a looser tolerance for the connector polarization keying is desirable (for electrical contact mating). The tolerance on both the master (main) and clocking keys are 8 times and almost 3 times looser (less precise), respectively, on the MIL-DTL-38999 than on the MIL-PRF-64266 connector.

b. MIL-PRF-64266 connector. This connector has one master primary key, one master secondary key, and one clocking key. Also there are two guide pins. The tolerance on the guide pins is 10 times tighter (more precise) than that on the polarization keys for this connector.

c. Analysis. Tighter tolerance mechanical alignment is essential for enhanced optical performance and to minimize cracked alignment sleeves (the latter caused by looser rotational alignment or improperly seated termini). On connectors that are designed for fiber optical applications, a courser mechanical alignment is achieved by the polarization keys with the mating keyways. A finer mechanical alignment is achieved by the guide pins to further restrict translational (side-to-side) and rotational travel. The MIL-DTL-38999 connector has a looser polarization key tolerance, whereas, the MIL-PRF-64266 connector has both a tighter polarization key tolerance and an even tighter guide pin tolerance for mechanical alignment of the termini.

A.6 Impact on other connector accessories. The impact of other connector accessories used as listed in A.6.a through A.6.c shall be considered for the connector selection.

a. Backshells. The backshell has no impact on the mechanical alignment at the connection mating end of the connector. Addressed are the considerations at the connector cable entry end (i.e., end of the connector which mates with the backshell).

(1) Configuration. The connector cable entry end for both the MIL-DTL-38999 Series III and the MIL-PRF-64266 connector are the same (configuration and dimensions).

(2) Exception. Backshells for one connector (of the same shell size) will mate with the other with one exception. Backshells containing a grommet to match the connector insert cavity arrangement must be matched with a grommet to the particular MIL-DTL-38999 connector of MIL-PRF-64266 connector insert cavity arrangement.

(3) MIL-PRF-64266 series backshells. These backshells have been designed specifically for fiber optic applications. While specified for use with the MIL-PRF-64266 connector, these backshells can be used with the MIL-DTL-38999 connector also.

b. Connector probe adapters (see A.3.3 and Requirement 6205). The connector probe adapter is used, along with a Measurement Quality Jumper (MQJ) containing a test probe, for measuring the optical loss.

(1) MIL-DTL-38999 Series III connector. This connector probe adapter for this connector uses the polarization keys, along with alignment sleeves, as the means of mechanical alignment.

(2) MIL-PRF-64266 connector. This connector probe adapter for this connector uses both the polarization keys and guide pins, along with alignment sleeves, as the means of mechanical alignment.

(3) Determination of sufficient alignment. If sufficient alignment can be achieved mechanically without them, then the guide pins can be considered optional. Sufficient alignment is determined by the degree of optical performance desired (specified). Also, end of life considerations with mechanical wear is to be taken into account.

REQUIREMENT 1102

Source: https://assist.dla.mil -- Downloaded: 2016-12-31T20:53Z
Check the source to verify that this is the current version before use.

(4) Connector probe adapter, both receptacle and plug type. Receptacle type connector probe adapters are inserted into connector plugs. Plug type connector probe adapters are inserted into connector receptacles.

(5) Universal keying connector probe adapters for the MIL-DTL-38999 connector.

(a) Plug type connector probe adapters. Plug adapters or the connector probe adapter configuration that is inserted into connector receptacles with a universal keying position utilize only one male master key for keying (i.e., keying position). The universal keying position is less preferred due to degradation in optical performance. The advantage is that this “universal key” type plug adapters can be inserted into a connector receptacle with any of the six keying position options (N, A, B, C, D, E, F).

(b) Receptacle type connector probe adapters cannot be manufactured with the universal keying position.

(6) Keying configurations for the MIL-PRF-64266 connector. Only one test probe adapter is needed for each shell size of the MIL-PRF-64266 connector. Each connector probe adapter contains keying for all 12 keying positions.

(7) Recommended restriction. The JFOWG recommends restricting the use of MIL-DTL-38999 plug type connector probe adapters with the universal keying position to legacy applications only.

(a) Measurement performance. Looser tolerances found on plug adapters with the universal keying position can significantly impact optical loss measurements on single mode fiber sizes (and potentially smaller core multimode fiber sizes). Looser tolerances directly relate to the degree of repeatability (i.e., reduced repeatability or larger standard deviation) obtained over multiple optical loss measurements for the same cavity position with successive mating.

(b) Specific recommendations. Do not use a connector probe adapter with the universal keying position for all single mode shell sizes and for multimode shell sizes 19 and above. Use for multimode with smaller shall sizes should be restricted to those applications where repeatability of optical loss measurements is determined to be acceptable for the application.

(c) Supportability concerns. If available (provided with support equipment), plug type connector probe adapters with the universal keying position can inadvertently be used where this universal keying position may not be authorized for optical loss measurements on single mode or the specified fiber size.

c. Connector probe (see A.3.2 and Requirement 6207). A connector probe is a single ferrule connector that is placed on one end of a MQJ and used to mate with the terminus inside a multiple termini connector. The connector probe is mated with the terminus through the use of a connector test probe adapter. A connector probe allows for the optical loss testing (and return loss testing for single mode fiber sizes) when placed in a multiple terminus connector (in conjunction with the connector probe adapter). Also when inserted into a connector probe adapter, the spring force with the mating terminus is replicated. Connector probe insertion/removal from the connector probe adapter can be done without the use of terminus insertion/removal tools. One limitation is that ferrule end face of the connector probe degrades with successive mating. One step in the optical loss measurement is used to determine if the amount of degradation (as measured in optical loss) requires connector probe (i.e., connector probe type MQJ) refurbishment or replacement.

REQUIREMENT 1102

Source: https://assist.dla.mil -- Downloaded: 2016-12-31T20:53Z
Check the source to verify that this is the current version before use.

REQUIREMENT 1103

FIBER OPTIC CABLE REPAIR

1. Purpose. This requirement establishes criteria for repair of cabling damage. This requirement is intended for developmental, prototype, production, rework, and modification programs on military platform fiber optic cable assemblies.

2. Applicable documents.

2.1 General. The documents listed in this section are specified in sections 3, 4, and 5 of this standard practice. This section does not include documents cited in other sections of this standard practice or recommended for additional information or as examples. While every effort has been made to ensure the completeness of this list, document users are cautioned that they must meet all specified requirements of documents cited in sections 3, 4, and 5 of this standard practice, whether or not they are listed.

2.2 Other Government documents, drawings, and publications. The following other Government documents, drawings, and publications form a part of this standard practice to the extent specified herein. Unless otherwise specified, the issues are these documents are those cited in the solicitation or contract.

NAVAIR 01-1A-505-1/ T.O. 1-1A-14/TM1-1500-232-24-4	Installation and Testing Practices Aircraft Fiber Optic Cabling.

(A copy of this document is available online at: https://mynatec.navair.navy.mil. NATEC has three different processes to obtain the manual, depending on if you are Government personnel (military and civilians), Contractors with a Government contract, or everyone else. If unable to access this Web Site or require further assistance, contact (1) NATEC Customer Service: 619.545.1888, (2) NATEC Website Status Hotline: 619.545.1706, or (3) NATEC Customer Service E-mail: nani_customerservice@navy.mil.)

2.3 Order of precedence. Unless otherwise noted herein or in the contract, in the event of a conflict between the text of this document and the references cited herein, the text of this document takes precedence. Nothing in this document, however, supersedes applicable laws and regulations unless a specific exemption has been obtained.

3. Definitions.

3.1 Fusion splice. Two optical fibers are melted or fused together by means of a fusion splice apparatus using such methods as electric arc, laser, or gas flame.

3.2 Mechanical splice. Two optical fibers are held in alignment for an indefinite period without movement by means of a mechanical fixture (such as a tube/capillary, rods, or v-groove substrate) within the mechanical splice. Precision cleaves on the fiber ends and index matching fluid is used as two measures to ensure low optical loss.

3.3 Redundancy. Inclusion of cable spares within fiber optic cable bundles/harnesses.

3.4 Threading. Positioning of replacement cable along side of existing cable bundle or cable harness. Threading and piggy backing are two other terms used for remove and replace.

4. Requirements. Remove and replace is the preferred method and the one that shall be implemented as the one for cabling repair.

4.1 Remove and replace.

4.1.1 Applicability.

4.1.1.1 Preferred repair method. The preferable repair method shall be to remove and replace.

Source: https://assist.dla.mil -- Downloaded: 2016-12-31T20:53Z
Check the source to verify that this is the current version before use.

4.1.1.2 Authorized repair method. Remove and replace shall be used when splicing is not authorized by the platform requirements.

4.1.2 Meeting other considerations.

4.1.2.1 Test and further replacement. Remove and replace shall be performed in a manner that permits both testing and further replacement of either individual cable segments or the cable harness.

4.1.2.2 No disturbance of structural bonds. Remove and replace shall be done in a manner that does not require or at the very least minimizes the disturbing of any riveted or bonded attachments.

4.2 Splicing.

4.2.1 Applicability. Splicing shall be performed only when its use is authorized for that individual platform.

4.2.2 Constraints.

4.2.2.1 Allowed splices. Only approved splices in accordance with requirement 1102 shall be used.

4.2.2.2 Allowed application. Splicing shall be used only as a repair method and not as a termination method. Splicing shall be performed within the restrictions specified in requirement 1101.

4.2.3 Meets other considerations.

4.2.3.1 Test and further replacement. Adequate space shall be allotted for installation, inspection, and testing of each segment of cabling containing a splice.

5. Implementation. Three approaches have been identified for cable repair: Remove and replace, splicing, and re-termination.

5.1 Remove and replace. Threading is a method used and shall be considered an alternate term for remove and replace for this fiber optic application.

5.2 Splicing. Splicing includes the allowance of both mechanical splices and fusion splices. Mechanical splices are components and, when splicing is allowed, mechanical splices used shall conform to the applicable specification or standard (see requirement 1102). Likewise, fusion splicing is a process where approval shall be required for equipment and process used.

5.3 Re-termination. Re-termination is the most complex and time consuming process, but it does allow for a re-enterable (mating capable) component. As such, re-termination shall be considered only if this process is platform supportable and can be accommodated in accordance with requirement 1102.

6. Notes.

6.1 Lessons learned.

6.1.1 Preferred repair method. Use a remove and replace repair strategy for fiber optic cable segments where practical. This minimizes total ownership costs by avoiding having to include craft unfriendly practices which require a high degree of experience to learn and maintain proficiency (termination).

6.1.2 Splice selection. Information on the splice selection is in subordinate work package WP 013 01 of NAVAIR 01-1A-505-1/T.O. 1-1A-14/TM 1-1500-232-24-4.

6.1.3 Number of splices. A maximum of two splices should be allowed per segment, one at each end. Ensure the loss budget includes the allowance to accommodate the maximum number of splices specified per segment.

REQUIREMENT 1103

Source: https://assist.dla.mil -- Downloaded: 2016-12-31T20:53Z
Check the source to verify that this is the current version before use.

6.1.4 Location of splicing. Splicing should be allowed only within 457 mm (18 inches) or less from the connector. Splicing is the preferred repair method at this location. Provision of a 457 mm (18 inches) pre-terminated pigtail is recommended. If replacing segment requires multiple panel removals, then getting the aircraft operational in specified timeframe dictates default to a spice repair strategy.

6.1.5 Do not accept a new aircraft with splice(s). Acceptance of the aircraft from the prime contractor with any splices in the fiber optic cabling is not preferred. Splicing in newly received fiber optic cabling is considered to be a defect. Splicing should be incorporated as a method of field repair if required (where a remove and replace repair strategy was not practical).

6.2 Intended use. On these platforms, the fiber optic cable assemblies intended to be inspected include (1) cable harnesses, (2) equipment (electronic module/package) such as an ATC, LRC, LRM, LRU or WRA with internal fiber optics, (3) circuit card modules and assemblies with internal fiber optics, (4) fiber optic test jumpers, and (5) other miscellaneous cabling.

Source: https://assist.dla.mil -- Downloaded: 2016-12-31T20:53Z
Check the source to verify that this is the current version before use.

REQUIREMENT 1104

FIBER OPTIC CABLING LABELING

1. Purpose. This requirement establishes criteria for labeling of fiber optic cabling. This requirement is intended for developmental, prototype, production, rework, and modification programs on military platform fiber optic cable assemblies.

2. Applicable documents.

2.1 General. The documents listed in this section are specified in sections 3, 4, and 5 of this standard practice. This section does not include documents cited in other sections of this standard practice or recommended for additional information or as examples. While every effort has been made to ensure the completeness of this list, document users are cautioned that they must meet all specified requirements of documents cited in sections 3, 4, and 5 of this standard practice, whether or not they are listed.

2.2 Government documents.

2.2.1 Specifications, standards, and handbooks. The following specifications, standards, and handbooks form a part of this document to the extent specified herein. Unless otherwise specified, the issues of these documents are those cited in the solicitation or contract.

COMMERCIAL ITEM DESCRIPTION

A-A-59485 - Plastic Material, Pressure Sensitive Adhesive, for Aerospace Identification and Marking.

(Copies of this document are available online at http://quicksearch.dla.mil or from the Standardization Document Order Desk, 700 Robbins Avenue, Building 4D, Philadelphia, PA 19111-5094.)

2.2.2 Other Government documents, drawings, and publications. The following other Government documents, drawings, and publications form a part of this standard practice to the extent specified herein. Unless otherwise specified, the issues are these documents are those cited in the solicitation or contract.

NAVAIR 01-1A-505-4/ T.O. 1-1A-14-4/TM 1-1500-323-24-4- Installation and Testing Practices Aircraft and Fiber Optic Cabling.

(A copy of this document is available online at: https://mynatec.navair.navy.mil. NATEC has three different processes to obtain the manual, depending on if you are Government personnel (military and civilians), Contractors with a Government contract, or everyone else. If unable to access this Web Site or require further assistance, contact (1) NATEC Customer Service: 619.545.1888, (2) NATEC Website Status Hotline: 619.545.1706, or (3) NATEC Customer Service E-mail: nani_customerservice@navy.mil.)

2.3 Non-Government publications. The following documents form a part of this document to the extent specified herein. Unless otherwise specified, the issues of these documents are cited in the solicitation or contract.

SAE INTERNATIONAL

SAE AMS-DTL-23053 - Insulation Sleeving, Electrical, Heat Shrinkable, General Specification for.

(Copies of these documents are available online at www.sae.org from SAE International, 400 Commonwealth Drive, Warrendale, PA 15096-0001, and Tel: 877-606-7323 [inside USA and Canada] or 724-776-4970 [outside USA], email at CustomerService@sae.org.)

Source: https://assist.dla.mil -- Downloaded: 2016-12-31T20:53Z
Check the source to verify that this is the current version before use.

2.4 Order of precedence. Unless otherwise noted herein or in the contract, in the event of a conflict between the text of this document and the references cited herein, the text of this document takes precedence. Nothing in this document, however, supersedes applicable laws and regulations unless a specific exemption has been obtained.

3. Marking methods. Only one method will be used for marking individual cables and only two methods for cable bundles or cable harnesses. These methods are the direct marking scheme and the indirect marking scheme.

3.1 Direct marking. Direct marking is accomplished by printing on the cable bundle or cable harness outer covering. Direct marking will be identified at intervals not longer than 305 mm (12 inches) along the cable harness entire length. The first marking will be within 76 mm (3 inches) of the connector. If the cable length is shorter than 458 mm (18 inches), then also mark in the center of the cable length. Direct marking will not be done on individual fiber optic cables. Some restrictions on types of direct marking used are as follows:

a. Continuous printing methods such as Inkjet and Laser Marking have specific quality control requirements and will not be authorized for any fiber optic application.

b. Hot stamp marking directly on the cable will not be authorized for any fiber optic application.

3.2 Indirect marking. Indirect marking will be accomplished by printing a heat shrinkable sleeve or pressure sensitive adhesive marking tape and installing the printed sleeve or marking tape on the individual cables, cable bundle, or cable harness outer covering (see 5.2). Indirect marked individual cables will be identified with printed sleeves within 305 mm (12 inches) of the cable termination. Cables and cable bundles placed inside convoluted tubing not be indirectly marked along the cable length (only at the ends). Indirect marked cable bundle or cable harness will be identified with printed sleeves or marking tape at the locations specified in 3.2a through 3.2d below.

a. After the last clamp,

b. Within 305 mm (12 inches) of the cable termination,

c. At intervals of 914 mm (3 feet) throughout the length of the individual cables, cable bundle, or cable harness.

d. Within 152 mm (6 inches) of the cable assembly entering or existing conduit for routing through a fuel tank or used as protection in a severe environment.

4. Marking schemes. Only the four general marking schemes listed in 4.1 through 4.2 shall be used to identify fiber optic cabling. Refer to the platform maintenance manual for specifics of the marking scheme used.

4.1 Marking on the equipment (electronics module/package). A triangular shaped label shall be placed on the electronic module/package to identify a fiber optic connection port or connector (see 5.1). This label has been standardized across aircraft platforms. The same or an equivalent marking shall be placed on the electronic module/package for other platform classes.

4.2 Marking on cable harnesses. A shrink sleeve or other medium with markings shall be placed on the cable harness exterior to identify that the cable harness contains fiber optic cables (see 5.2). This is a recommended label and has not been standardized across platforms. Different approaches are used in marking color scheme to identify fiber optic cabling. One approach with a single color marking scheme and one with a multiple color marking scheme are listed as examples in 4.2a and 4.2b. When selected, the approach shall conform to 4.2a or 4.2b, as applicable.

REQUIREMENT 1104

Source: https://assist.dla.mil -- Downloaded: 2016-12-31T20:53Z
Check the source to verify that this is the current version before use.

a. One approach for single color cable marking.

(1) Single fiber cable with a violet outer jacket (independent of core size, the color indicating special cable).

(2) Cable harness over braid with a violet tracer.

(3) Cable or cable bundle routed within violet colored convoluted tubing.

b. One approach for multiple color cable marking.

(1) Single fiber cable shall comply with the outer jacket color scheme listed in table 1104-I for each core size. For this color scheme, flight test and instrumentation wiring contains an orange outer jacket also. Orange fiber optic cable is not visible once inside the cable harness. This prevents the removal of orange fiber optic cable along with any flight test or instrumentation cabling.

(2) Cable harness containing a yellow reference designator sleeve (heat shrink) with required information (see 5.2). When specified, this sleeve shall be placed on the exterior of the cable harness or convoluted tubing.

TABLE 1104-I. Cable color for each fiber size.

Fiber size (microns)	Color
Single mode (all)	Yellow
Multimode 50/125	White 1/
Multimode 62.5/125	Gray
Multimode 100/140	Green
Multimode 200/240	Violet

1/ White is the preferred single fiber cable jacket color; however, if there is a conflict between identifying the difference between copper cables with White cable jackets, Aqua or Violet are suitable substitute cable jacket colors as well.

5. Fiber optic labeling.

5.1 Equipment label (electronics module/package). This label is also referred to as the ATC, LRC, LRM, LRU or WRA label. This label shall be placed within 152.4 mm (6 inches) (50.8 mm (2 inches) preferred) from the fiber optic connection port if practicable. Appendix A has the requirement for the standardized equipment label that shall be placed on the equipment.

5.2 Cable harness marking scheme. The requirements for one indirect marking scheme that may be found on fiber optic cable bundles and cable harnesses is specified in appendix B.

5.3 Cabling identification (W****).

5.3.1 Cable harness identifier. A unique cable harness identifier shall identify each cable harness. The cable identifier shall have the following format: W*****-FC. The equipment class designator is “W” (for wiring), followed by a distinct identifier for the cable harness, and ending in the fiber optic designator. This distinct identifier shall be no more than five digits (represented by “*****”). The fiber optic designator shall be denoted by the letters "FC" (Fiber Cable). Example: W50511-FC.

Source: https://assist.dla.mil -- Downloaded: 2016-12-31T20:53Z
Check the source to verify that this is the current version before use.

5.3.1.1 Hybrid cable harness identifier. A cable harness shall be classified as "fiber optic" when electrical (metallic) conductors or wires are mixed with fiber optic cable in the same cable harness (a hybrid cable harness). One alteration shall be that the last designation in a hybrid cable harness identifier shall be denoted by the letters "FM" (Fiber Metallic) instead of "FC".

5.3.2 Unique cable identifier. Each single fiber (simplex) cable in the fiber optic cable harness shall be designated by a cable identifier. This identifier shall distinguish a specific single fiber cable from all other single fiber cables on the platform. The cable identifier shall have the following format: W*****-#####-FC (where “W” = wiring equipment class designator, “*****” = cable harness distinct identifier, “#####” = distinct single fiber cable or wire in the cable harness, “FC” = Fiber Cable). Like the identifier for the cable harness, the distinct identifier for the individual cable (equivalent to electrical conductor or wire) shall be no more than five digits (represented by “#####”). Example: W50511-12345-FC

5.3.3 Cable identification on marking tape. When hand scribing labels (such as when a few labels are found missing), the cable or cable harness identifier (in conformance with 5.3.1 and 5.3.2) with the words "FIBER OPTIC" added shall be written legibility in capital letters with indelible ink.

6. Notes.

6.1 Lessons learned.

6.1.1 Use cable harness identification. Use of common labeling to identify fiber optic cable harnesses within the platform and among different platforms. Use of common labeling minimizes breaks in fiber due to personnel being unaware of handling fiber optic cable.

6.1.2 Label fiber optic capable equipment (such as, Electronics Module/Package) identification. Use common labeling to identify fiber optic connector ports on equipment such as a WRA, for compliance with both this labeling and laser safety requirements. This ensures that when a connector on a fiber capable box is opened, the proper cleaning process is enforced.

6.2 Intended use. On these platforms, the fiber optic cable assemblies intended to be labeled, as well as location and frequency/spacing of the labeling, include (1) cable harnesses, (2) other miscellaneous cabling and (3) equipment (electronic module/package) such as an ATC, LRC, LRM, LRU or WRA with internal fiber optics.

Source: https://assist.dla.mil -- Downloaded: 2016-12-31T20:53Z
Check the source to verify that this is the current version before use.

APPENDIX A

FIBER OPTIC EQUIPMENT MODULE LABEL

A.1 Purpose. This appendix provides the requirements for equipment module/package label such as used on a WRA, LRM or LRU with internal fiber optics. This label was formerly referred to as the WRA label.

A.2 Applicable documents.

A.2.1 General. The documents listed in this section are specified in sections A3, A4, and A5 of this standard practice. This section does not include documents cited in other sections of this standard or recommended for additional information or as examples. While every effort has been made to ensure the completeness of this list, document users are cautioned that they must meet all specified requirements of documents cited in sections A3, A4, and A5 of this standard practice, whether or not they are listed.

A.2.2 Government documents.

A.2.2.1 Specifications, standards, and handbooks. The following specifications, standards, and handbooks form a part of this document to the extent specified herein. Unless otherwise specified, the issues of these documents are those cited in the solicitation or contract.

COMMERCIAL ITEM DESCRIPTION

A-A-59485 - Plastic Material, Pressure Sensitive Adhesive, for Aerospace Identification and Marking.

(Copies of this document are available online at http://quicksearch.dla.mil or from the Standardization Document Order Desk, 700 Robbins Avenue, Building 4D, Philadelphia, PA 19111-5094.)

FEDERAL STANDARDS

FED-STD-595/17142 - Violet.

FED-STD-595/13655 - Yellow.

(Copies of these documents are available online at http://quicksearch.dla.mil or from the Standardization Document Order Desk, 700 Robbins Avenue, Building 4D, Philadelphia, PA 19111-5094.)

A.2.2.2 Non-Government publications. The following documents form a part of this document to the extent specified herein. Unless otherwise specified, the issues of these documents are cited in the solicitation or contract.

TELECOMMUNICATIONS INDUSTRY ASSOCIATION

TIA598 - Optical Fiber Cable Coding

(Copies are available online at www.tiaonline.org or from Telecommunications Industry Association (TIA), 2500 Wilson Boulevard, Suite 300, Arlington VA 22201.)

A.2.3 Order of precedence. Unless otherwise noted herein or in the contract, in the event of a conflict between the text of this document and the references cited herein, the text of this document takes precedence. Nothing in this document, however, supersedes applicable laws and regulations unless a specific exemption has been obtained.

A.3 Construction. Shape will be a triangle shown in figure 1104 A-1 with construction as specified in A.3.1 through A.3.4.

Source: https://assist.dla.mil -- Downloaded: 2016-12-31T20:53Z
Check the source to verify that this is the current version before use.

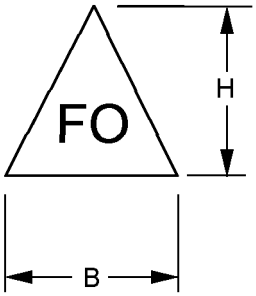

Dimension (nominal)	mm	Inch
B	12.7	.5
H	12.7	.5

FIGURE 1104 A-1. Equipment module label (formerly referred to as WRA label).

A.3.1 Color.

A.3.1.1 Text and border: Violet. Color will be No. 17142 in accordance with FED-STD-595 or will conform to limits of the equivalent coloring in accordance with TIA598.

A.3.1.2 Background: Yellow. Color will be No. 13655 in accordance with FED-STD-595 or will conform to limits of the equivalent coloring in accordance with TIA598.

A.3.2 Dimensions.

A.3.2.1 Font type: Times New Roman.

A.3.2.2 Font size: 2.5 mm (.10 inch).

A.3.2.3 Border thickness: 0.79 mm (.031 inch).

A.3.2.4 Width (across base): 13 mm (.50 inch).

A.3.2.5 Height (apex to base): 13 mm (.50 inch).

A.3.3 Material.

A.3.3.1 Type: Silver mylar.

A.3.3.2 Thickness: 0.025 mm (1 mil).

A.3.3.3 Backing: Adhesive in accordance with A-A-59485.

A.4 Placement.

A.4.1 Location. Label shall be applied to a smooth flat surface that is free from visual obstruction to the maintainer's line of sight.

A.4.2 Adhesion to surface. Location in which label is to be affixed shall be adequately prepared and cleaned to ensure label adhesion.

Source: https://assist.dla.mil -- Downloaded: 2016-12-31T20:53Z
Check the source to verify that this is the current version before use.

APPENDIX B

FIBER OPTIC CABLE HARNESS LABEL

B.1 Purpose. This appendix provides the requirements for one cable marking scheme when specified for use on fiber optic cables and fiber optic cable harnesses.

B.2 Applicable documents.

B.2.1 General. The documents listed in this section are specified in sections B3, B4, and B5 of this standard practice. This section does not include documents cited in other sections of this standard or recommended for additional information or as examples. While every effort has been made to ensure the completeness of this list, document users are cautioned that they must meet all specified requirements of documents cited in sections B3, B4, and B5 of this standard practice, whether or not they are listed.

B.2.2 Government documents.

B.2.2.1 Specifications, standards, and handbooks. The following specifications, standards, and handbooks form a part of this document to the extent specified herein. Unless otherwise specified, the issues of these documents are those cited in the solicitation or contract.

FEDERAL STANDARDS

FED-STD-595/17142 - Violet.

FED-STD-595/13655 - Yellow.

DEPARTMENT OF DEFENSE STANDARD

MIL-M-87958 – Marker Blanks, Pressure Sensitive Adhesive Wire or Cable Marker and Identification Label

(Copies of these documents are available online at http://quicksearch.dla.mil or from the Standardization Document Order Desk, 700 Robbins Avenue, Building 4D, Philadelphia, PA 19111-5094.)

B.2.2.2 Non-Government publications. The following documents form a part of this document to the extent specified herein. Unless otherwise specified, the issues of these documents are cited in the solicitation or contract.

TELECOMMUNICATIONS INDUSTRY ASSOCIATION

TIA598 - Optical Fiber Cable Coding.

(Copies are available online at www.tiaonline.org or from Telecommunications Industry Association (TIA), 2500 Wilson Boulevard, Suite 300, Arlington VA 22201.)

SAE INTERNATIONAL

SAE AMS-DTL-23053 – Insulation Sleeving, Electrical, Heat Shrinkable, General Specification For

(Copies of these documents are available online at www.sae.org from SAE International, 400 Commonwealth Drive, Warrendale, PA 15096-0001, and Tel: 877-606-7323 [inside USA and Canada] or 724-776-4970 [outside USA], email at CustomerService@sae.org.)

Source: https://assist.dla.mil -- Downloaded: 2016-12-31T20:53Z
Check the source to verify that this is the current version before use.

B.2.3 Order of precedence. Unless otherwise noted herein or in the contract, in the event of a conflict between the text of this document and the references cited herein, the text of this document takes precedence. Nothing in this document, however, supersedes applicable laws and regulations unless a specific exemption has been obtained.

B.3 Construction. Layout will be as shown in figure 1104 B-1 with construction as specified in B.3.1 through B.3.4.

B.3.1 Color.

B.3.1.1 Text and background: Colors that would obscure the borders or text will be avoided.

B.3.1.2 Border color (on outer edge of marking label): Violet. Color will be No. 17142 in accordance with FED-STD-595.

B.3.1.3 Background: Yellow is preferred color. Preferred color of yellow is No. 13655 in accordance with FED-STD-595.

B.3.2 Material.

B.3.2.1 Indirect marking using heat shrink. The preferred material is one conforming to SAE AMS-DTL-23053 for those configurations shown in table 1, WP 003 03 of NAVAIR 01-1A-505-4/T.O. 1-1A-14-4/TM 1-1500-323-24-4. Select material to ensure a suitable minimum temperature range for the intended space or application. SAE AMS-DTL-23053/18 (the PIN specified in specification sheet SAE AMS-DTL-23053/18) is recommended for the marking application, but the other heat shrink in this table may be substituted if the temperature range falls within -25° to 125°C.

B.3.2.2 Indirect marking using marking tape. Preferred material is pressure sensitive adhesive marking tape conforming to MIL-M-87958, type: poly-vinyl-fluoride (Tedlar) backing, color: yellow, form: R1 preferred, and with a blank width of 38 mm (1.50 inch) preferred, but 19 mm (.75 inch), 32 mm (1.25 inch) and 45 mm (1.75 inch) blank widths allowed.

B.3.3 Dimensions.

B.3.3.1 Text font type and size: Per manufacturer's standard.

B.3.3.2 Border thickness (on outer edges of marking label): 3.2 mm (.125 inch) minimum, see figure 1104 B-1.

B.3.3.3 Border location: Offset at equal distances from outer edges, see figure 1104 B-1.

B.3.3.4 Border configuration: Continuous band (violet radial stripe) around label within 3.2 mm (.125 inch) thickness.

B.3.3.5 Label dimensions: Size designators for SAE AMS-DTL-23053/18 class 3 and SAE AMS-DTL-23053/5 class 3 found in table 2 are the ones that should be used.

B.3.4 Printing of border: (Violet band, see figure 1104 B-1).

B.3.4.1 Insertion. Border will be printed using the manufacturer's standard marking scheme.

B.3.4.2 Allowance for flat printed labels. When the printer has the capability to include a violet stripe as part of the marking, and when the printer is setup or designed for flat printed labels, an allowance is given for a break at the two edges of the flat marker (versus requiring a continuous radial violet stripe).

Source: https://assist.dla.mil -- Downloaded: 2016-12-31T20:53Z
Check the source to verify that this is the current version before use.

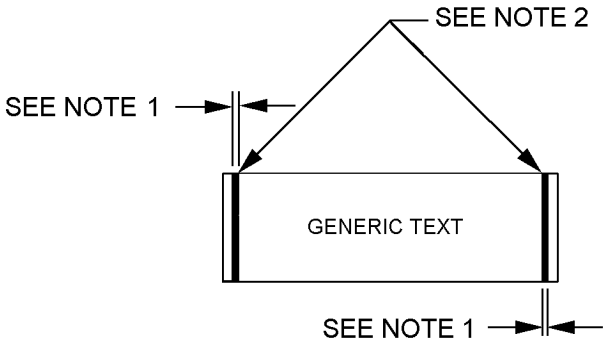

1/ Border band width 3.2 mm (.125 inch) nominal.
2/ Border band color violet.

FIGURE 1104 B-1. One cable harness marking scheme.

Source: https://assist.dla.mil -- Downloaded: 2016-12-31T20:53Z
Check the source to verify that this is the current version before use.

REQUIREMENT 1105

FIBER OPTIC CABLING INTERFACE ON EQUIPMENT MODULES

1. Purpose. This requirement establishes fiber optic cabling interface criteria on equipment modules (i.e., electronic module/package) such as a WRA, LRM or LRU). This requirement is intended for developmental, prototype, production, rework and modification programs on military platform fiber optic cable assemblies.

2. Applicable documents.

2.1 General. The documents listed in this section are specified in sections 3, 4, and 5 of this standard practice. This section does not include documents cited in other sections of this standard practice or recommended for additional information or as examples. While every effort has been made to ensure the completeness of this list, document users are cautioned that they must meet all specified requirements of documents cited in sections 3, 4, and 5 of this standard practice, whether or not they are listed.

2.2.1 Specifications, standards, and handbooks. The following specifications, standards, and handbooks form a part of this document to the extent specified herein. Unless otherwise specified, the issues of these documents are those cited in the solicitation or contract.

COMMERCIAL ITEM DESCRIPTION

A-A-59569 - Braid, Wire (Copper, Tin-Coated, Silver-Coated, or Nickel Coated, Tubular or Flat).

(Copies of these documents are available online at http://quicksearch.dla.mil or from the Standardization Document Order Desk, 700 Robbins Avenue, Building 4D, Philadelphia, PA 19111-5094.)

DEPARTMENT OF DEFENSE SPECIFICATION

MIL-DTL-38999 - Connectors, Electrical Circular, Miniature, High Density, Quick Disconnect (Bayonet, Threaded and Breech Coupling), Environment Resistant, Removable Crimp and Hermetic Solder Contacts, General Specification For.

2.2.2 Non-Government publications. The following documents form a part of this document to the extent specified herein. Unless otherwise specified, the issues of these documents are cited in the solicitation or contract.

AEROSPACE INDUSTRIES ASSOCIATION OF AMERICA INC.

NAS813 - Cap - Protective, Electrical Connector.
NAS820 - Plug - Protective, Electrical Connector.

(Copies of these documents can be obtained online at http://www.aia-aerospace.org/ or from Aerospace Industries Association Of America Inc., 1000 Wilson Blvd, Suite 1700, Arlington, VA 22209.)

SAE INTERNATIONAL

SAE AS5658 - Platform/Subsystem Common Interface Control Document Format.
SAE AS85049/138 - Connector Accessories, Electrical, Cap, Dust, Plastic, Category 9.

(Copies of these documents are available online at www.sae.org from SAE International, 400 Commonwealth Drive, Warrendale, PA 15096-0001, and Tel: 877-606-7323 [inside USA and Canada] or 724-776-4970 [outside USA], email at CustomerService@sae.org.)

Source: https://assist.dla.mil -- Downloaded: 2016-12-31T20:53Z
Check the source to verify that this is the current version before use.

2.3 Order of precedence. Unless otherwise noted herein or in the contract, in the event of a conflict between the text of this document and the references cited herein, the text of this document takes precedence. Nothing in this document, however, supersedes applicable laws and regulations unless a specific exemption has been obtained.

3. Definitions.

3.1 Bend diameter, minimum, short-term. The short-term bend diameter applies during handling and installing. The short-term bend diameter may be different for simplex tight buffer cable, for simplex loose tube cable, and for convoluted tube or conduit.

3.2 Bend diameter, minimum, long-term. The long-term bend diameter applies to the completed installation. The long-term bend diameter may be different for simplex, tight buffer cable, for simplex, loose tube cable and for convoluted tube or conduit.

3.3 Cable, loose tube. A fiber optic cable design is one configured with one or more optical fibers are fitted loosely within a tube, giving the optical fibers freedom to move. This mobility and isolation from the tube minimizes the effects of external forces on the performance of the link. The isolation allows cable expansion and contraction with temperature independent of the optical fibers.

3.4 Cable, tight buffer. A fiber optic cable design is one configured with an additional protective coating (additional buffer layer) applied directly over a coated (buffered) fiber. The additional or secondary buffer layer helps preserve the fiber's inherent strength and provides increased mechanical protection. A tight buffer cable allows cable placement in tighter bends, rougher handling (such as better crush and impact resistance).

3.5 Chafing. Repeated motions between cabling components, between cabling and equipment, between cabling and the structure that result in wear causing mechanical failure and/or degraded or complete loss of the optical signal. Wear is the result of rubbing, excessive twisting, and/or bending. Also, chafing may be a result of poor installation practices. Chafing includes poor clamping, poor lacing, and poor routing. Cabling must be routed, clamped, and laced to prevent any contact with equipment or structures.

3.6 Fiber optic cabling. Fiber optic cabling is a term used to include single fiber cable, multiple fiber cable, fiber optic cable bundles, and fiber optic cable harnesses. The (optical) fiber is the optical conduit or waveguide transmission media, whereas metallic conductor (wire) is used in an electrical cable. Cable structure is added to make the fibers easier to handle and maintain. The fiber is a thin piece of glass (with a diameter usually around 125 micrometers) that contains and transports the light signals.

3.7 Wire. "A usually pliable metallic strand or rod made in many lengths and diameters, sometimes clad and often electrically insulated, used chiefly for structural support or to conduct electricity." Source: American Heritage Dictionary, College Edition.

4. Electronic module interface, general requirements.

4.1 Electronic module interface format. Platform or subsystem logical, physical, and environmental interface shall conform to the platform/subsystem interface control documents (ICDs). SAE AS5658 shall be used as the means to standardize and to provide a common document format for the development and comparison of platform/subsystem interface control documents (ICDs).

4.2 Labeling.

4.2.1 WRA label. The triangular shaped label, as specified in 4.1 of Requirement 1104, shall be placed on the electronics module exterior to identify a fiber optic connection port or connector.

4.2.2 Laser classification label. For electronic modules with a laser diode as the transmitting optical source and if feasible as room permits, a label with the laser classification shall be affixed to the exterior.

4.3 BIT. The function of the Built-In-Test (BIT) capability shall be tested, as specified in Requirement 1201, to verify ability for distinguishing in which of three zones (transmitter, cabling, receiver) a fault has occurred.

REQUIREMENT 1105

Source: https://assist.dla.mil -- Downloaded: 2016-12-31T20:53Z
Check the source to verify that this is the current version before use.

4.4 Optical measurement inspection. Optical source power and optical sensitivity of the receiver shall be obtained for the completed electronics module. Optical power measurement of the transmitting optical source shall be using the method specified in Requirement 1301. Optical sensitivity of the receiver shall be determined by use of an optical source and optical attenuator. Optical source power shall be greater than and optical sensitivity shall be less than the limits specified for those used in the loss budget calculations performed as specified in Requirement 1202.

4.5 End face geometry inspection. Ferrule end face geometry for single ferrule connectors and termini for multiple termini connectors shall be inspected and conform to Requirement 1102.

5. Fiber optic cabling interface requirements.

5.1 Cabling.

5.1.1 Externally induced loadings. Internal cabling shall be routed to prevent axial, lateral and torsion loads from being applied.

5.1.2 Access panel removal. Fiber optic cabling routing shall be located so that interior optical fiber cables will not be disturbed by disassembly or removal of access panels.

5.1.3 Cable slack. Sufficient cable slack shall be provided to perform required termini reseating and repining at the connector interface, to allow full extension of any vibration isolators or shock mounts, and prevent cable strain at points of bending and clamping.

5.1.4 Anti-chafing measures. Measures shall be taken to prevent chafing due to repeated motions (rubbing, excessive twisting, or bending) between cabling components, between cabling and other interior components (including at edges), or between cabling and the structure (including at edges) that result in wear causing mechanical failure and/or degraded or complete loss of the optical signal. Measures taken to prevent chafing shall include proper routing and clamping as defined in 3.5 and may include the measures specified in 5.1.4.1 through 5.1.4.3.

5.1.4.1 Use of convoluted tubing. When interior cabling is placed in tubing, among the types of tubing considered for use should be convoluted tubing, as those conforming to Requirement 1101.

5.1.4.2 Supports for routed cable. When interior cabling is secured, among the means considered to prevent chafing by supporting the cabling are metal cushion clamps and lacing tape, as those conforming to Requirement 1101.

5.1.4.3 Routing through cutouts. When interior cabling is routed through cutouts, among the means considered to prevent chafing are metal cushion clamps and grommets, as those conforming to Requirement 1101.

5.1.5 Minimum bend diameter, long term. Minimum long term bend diameter shall not be exceeded for any fiber optic cabling route.

5.1.5.1 Cabling. Unless otherwise specified for the particular cabling used, minimum bend diameter shall not be less than 16 times the cable diameter (i.e., 8 times the cable diameter if working in terms of cable bend radius). For loose tube cabling, the requirement specified for tubing shall be used in lieu of cabling.

5.1.5.2 Tubing. Unless otherwise specified for the particular tubing used, minimum bend diameter shall not exceed 20 times the tubing diameter (e.g., 13 mm (.5 inch) convoluted tubing diameter results in a 254 mm (10 inch) cable bend diameter).

5.2 Connectors.

5.2.1 Segregate fiber optic from electrical connectors. Fiber optic termini shall not be mixed with electrical contacts within the same multiple termini connector.

5.2.1.1 Exception to connector segregation. Connectors external to the platform, such as at the pylons on an aircraft, where only one connection is possible, may accept hybrid cabling (i.e., with a connection containing both fiber optic termini and electrical contacts). Where an exception is approved and fiber optic termini are mixed with electrical contacts, the connector shall be categorized as and marked as a fiber optic connector.

REQUIREMENT 1105

Source: https://assist.dla.mil -- Downloaded: 2016-12-31T20:53Z
Check the source to verify that this is the current version before use.

5.2.1.2 Segregation of connectors with different fiber types. Unless otherwise specified, no mixed fiber cabling shall be used (such as cabling that contains more than one size and/or type of optical fiber) either internal to the equipment module or to any one fiber optic connector.

5.2.2 Position. Design of electronics module shall consider connector position so as to minimize the number of times each fiber optic connector mated pair is mated and de-mated. Preference for placement is such that a fiber optic connector is the last to de-mate and the first to mate.

5.2.2.1 Minimum spacing for circular connector mating operations. A minimum clearance of 25 mm (1 inch) around 270 degrees of the diameter shall be provided around the connector plug coupling nut (such as coupling nut that mates the connector plug to the connector receptacle). Where this requirement cannot be met, connector plug attachment and removal using only common hand technique shall be demonstrated and successfully performed. Where this requirement cannot be met (and removal must be demonstrated and successfully performed), the fiber optic connector shall be placed so that it is the last one off and the first one on.

5.2.2.2 Standardize keyway positioning. Connector installed with the longitudinal axis (i.e., axis parallel to the cabling length) in a horizontal direction shall have the master keyway positioned at the top. Connector installed with the longitudinal axis (i.e., axis parallel to the cabling length) in a vertical direction shall have the master keyway positioned facing the front of the platform.

5.2.2.3 Positioning for drainage. Positioning shall be done so that, when unmated, any condensate or fluids does not drain into but drains out of the connector receptacle. Connectors shall not be positioned or mounted either in standing water or at a site to gather standing water.

5.2.2.4 Redundancy. For essential equipment in which there are separate operating conditions, such as normal and an emergency, separate connector shall be used for each of these two conditions where feasible.

5.2.3 Use of preservatives on fiber optic connectors. Preservatives (including corrosion prevention compounds (CPC) and lubricants) shall not be placed on fiber optic connectors.

5.2.4 Selection. Selection of multiple termini connectors shall conform to those specified in Requirement 1102.

5.2.4.1 Applicability. Fiber optic connectors shall be used at locations required to affix internal cabling to the equipment module, join different segments of cabling within the equipment module, and where disconnection is required for maintenance and inspection actions within the equipment module.

5.2.4.2 Separate measures to prevent cross mating. Fiber optic connectors used to provide separation of circular, multiple termini connectors with fiber optic cabling in the same location shall be installed so that it will be impossible to mate the wrong connector in another mating unit. When more than one connector is used at the same location, connector selection shall be implemented in the order listed in 5.2.4.2.1 through 5.2.4.2.3. This ordering is done to limit/standardize on connector configurations that must be supported logistically. Coding of the identical configured connectors (such as color coding) versus positive prevention measures for improper mating shall not be used.

5.2.4.2.1 Shell size. Use alternative shell sizes (to accommodate differences in number of cables in each cable harness).

5.2.4.2.2 Insert cavity arrangement. Use alternative insert with different cavity arrangement (i.e., number of cavities) where alternative insert arrangements are available for a specified shell size.

5.2.4.2.3 Keying positions. Use alternative keying positions.

5.2.5 Insert.

5.2.5.1 Insert configuration. The connector receptacle for multiple termini connectors shall contain the inserts for socket termini. When the multiple termini connector has the insert for the pin terminus configuration only, then retention of the alignment sleeves shall be done in the connector receptacle. Connectors with only fiber optic pin termini, whose mating connector have the alignment sleeves built-in, must use special contacts with a shorter pin to preclude damage to the mating termini.

REQUIREMENT 1105

Source: https://assist.dla.mil -- Downloaded: 2016-12-31T20:53Z
Check the source to verify that this is the current version before use.

5.2.5.2 Fully populated inserts. Empty cavities in the connector insert shall be filled with dummy (fiber optic) termini. For a MIL-DTL-38999 series III connector, sealing plugs (at the rear grommet) alone may be used in lieu of dummy termini (with sealing plugs) in empty cavities.

5.2.6 Sealing. Sealing material (such as gaskets and o-rings) shall be used on the connector receptacle flange when sealing is required on the mounting surface. For flange mounting connector receptacles, fasteners shall be placed in and secured in all holes of the mounting flange.

5.2.6.1 EMI protection. If the system interfacing with the fiber optic cabling requires EMI protection, EMI shielding for the internal fiber optic cabling can be addressed with an approved conductive gasket/grommet and/or with metal braid sleeve in accordance with A-A-59569, as applicable. Also, if required, an approved conductive gasket or o-ring shall be used at the flange of the connector receptacle mounted on the exterior of the equipment module.

5.3 Dust cover requirements for multiple termini connectors. Measures shall be taken to protect the connector interior and termini of unmated connectors from contamination (such as dust and fluids).

5.3.1 Supply as part of connector. Dust covers shall be provided with and affixed to each fiber optic connector receptacle on the equipment module.

5.3.2 Dust cover attachment. Dust cover shall consist of a metal cap with lanyard (or composite cap with lanyard, as applicable). The lanyard shall be the means used to affix the dust cover to the connector.

5.3.3 Dust protection during production. Through production (except when uncovered for assembly operation) unmated fiber optic connectors on the equipment module shall be suitably covered. Plastic dust caps such as those conforming to SAE AS85049/138, NAS813 and NAS820 may be used for this purpose.

5.4 Dummy stowage receptacles.

5.4.1 Installation instructions. Installation instructions provided with the equipment module shall specify that a dummy stowage receptacle, with dust cover and lanyard, be provided for each connector receptacle on the equipment module. Installation instructions shall list the PIN (military specification Part Identification Number) for each dummy stowage receptacle and dust cover required.

5.4.2 Location. The dummy stowage receptacle is to be located adjacent to the equipment module.

5.4.3 Intent. Dummy stowage receptacles are used to secure connector plugs when unmated from the equipment module.

6. Notes.

6.1 Lessons learned.

6.1.1 Label fiber optic capable equipment (such as~~,~~ Electronics Module/Package) identification. Use common labeling to identify fiber optic connector ports on equipment, such as a WRA, for compliance with both this labeling and laser safety requirements. This ensures that when a connector on a fiber capable box is opened, the proper cleaning process is enforced.

6.2 Intended use. On these platforms, equipment (electronic module/package) such as an ATC, LRC, LRM, LRU or WRA with internal fiber optics.

Source: https://assist.dla.mil -- Downloaded: 2016-12-31T20:53Z
Check the source to verify that this is the current version before use.

CABLING SUPPORT REQUIREMENTS

(1201-1202)

Source: https://assist.dla.mil -- Downloaded: 2016-12-31T20:53Z
Check the source to verify that this is the current version before use.

REQUIREMENT 1201

BUILT-IN TEST (BIT)

1. Purpose. The function of BIT in a fiber optic system is to determine if there is acceptable optical transmission through the system. The fiber optic system consists of the transmitter, intermediate fiber optic cabling (including connector and splicing components) and receiver. For purposes of troubleshooting, these are considered as three ambiguity zones. The intent of BIT is to reduce the ambiguity zones. This requirement is intended for developmental, prototype, production, rework, and modification programs on military platform fiber optic systems.

2. Applicable documents.

2.1 General. The documents listed in this section are specified in sections 3, 4, and 5 of this standard practice. This section does not include documents cited in other sections of this standard practice or recommended for additional information or as examples. While every effort has been made to ensure the completeness of this list, document users are cautioned that they must meet all specified requirements of documents cited in sections 3, 4, and 5 of this standard practice, whether or not they are listed.

2.2 Government documents.

2.2.1 Specifications, standards, and handbooks. The following specifications, standards, and handbooks form a part of this document to the extent specified herein. Unless otherwise specified, the issues of these documents are those cited in the solicitation or contract.

DEPARTMENT OF DEFENSE HANDBOOK

MIL-HDBK-217 - Reliability Prediction of Electronic Equipment.

(Copies of this document are available online at http://quicksearch.dla.mil or from the Standardization Document Order Desk, 700 Robbins Avenue, Building 4D, Philadelphia, PA 19111-5094.)

2.3 Order of precedence. Unless otherwise noted herein or in the contract, in the event of a conflict between the text of this document and the references cited herein, the text of this document takes precedence. Nothing in this document, however, supersedes applicable laws and regulations unless a specific exemption has been obtained.

3. Definitions.

3.1 Ambiguity zones. Categorizing different classes of components that comprise a fiber optic communications network into more than one segment (or zone) with the inability to distinguish a faulty component within those zones (the ambiguity). A simple three zone system may consist of the transmitter, cabling, and receiver. The ambiguity is the inability to distinguish in which zone the fault occurs. The intent of BIT is to reduce the ambiguity zones to one.

3.2 Background (or continuous or periodic) BIT. Monitoring routine that runs continuously on a non-interference basis during normal operation of the system/equipment and detects and displays “No-Go’s” or degraded functions to the crew providing 100 percent detection of functional and critical failures.

3.3 Initiated (or polled) BIT. Routine for a status or system check that is performed by the pilot, crew, or maintainer at a time of the initiator’s choosing. Initiated BIT provides more in-depth information than Start-up BIT or Background BIT. Constraints such as duration or interference with other operations being performed may negate the ability to perform some of the checks in the background or during start-up. (One example is avoidance of a check on flight control surfaces that would require movement during flight.) Level or type of checks performed can be varied for different users. For example, an initiated BIT may consist of checking system availability for pilots and checking items to remove and replace for maintainers.

Source: https://assist.dla.mil -- Downloaded: 2016-12-31T20:53Z
Check the source to verify that this is the current version before use.

3.4 Mean Time Between Critical Failure (MTBCF). This metric is a measure of the systems reliability which includes the effects of any fault tolerance which may exist. The average time between failures which causes a loss of a system function defined as “critical” by the customer.

3.5 Mean Time Between Failure (MTBF). This metric is a basic measure of reliability for repairable items. It is the average time during which all parts of the item perform within their specified limits, during a particular measurement period under stated conditions.

3.6 Mean Time Between Maintenance (MTBM). This metric is a basic measure of reliability for repairable fielded systems. It is the average time between all system maintenance actions. Maintenance actions may be for unscheduled repair or scheduled preventative purposes.

3.7 Start-up (or power-up) BIT. Monitoring routine initiated on power-up of the system/equipment. This routine may be identical to background BIT or may be unique depending on specific needs of the system/equipment.

NOTE: One can use MTBM and MTBF interchangeably as long as you know the definitions. Scheduled and preventative maintenance are factored into the MTBM value. Scheduled and preventative maintenance are not factored into the MTBF value.

4. General requirements.

4.1 Performance. BIT software shall enable both automatic and polled checks of the fiber optic cabling system during ground operations and in-flight. If an unacceptable level of optical transmission is found, BIT shall include features to (1) interrogate the fiber optic cabling system, (2) identify the fault/break, and (3) store the fault/break data in terms of location from transmitter.

4.1.1 Checks with cabling connected. BIT checks shall be implemented without disconnecting mated connector pairs.

4.1.2 Duration for start-up BIT. Start-up BIT shall be implemented in 1 minute or less once the system being monitored is on-line.

4.1.3 System operation allowance during background BIT. Background (also referred to as continuous or periodic) BIT shall be non-intrusive to the actual data transmission.

4.1.4 Off-line use of BIT. Initiated BIT shall have the capability of being performed off-line (when a platform is in maintenance and not an operational mode) for applications such as when a fault is detected.

4.1.5 Impact on system reliability. The BIT methodology employed shall not degrade the fiber optic system reliability.

4.2 BIT parameters. BIT parameters. Fault recognition shall narrow fault location to within 10 cm (3.94 inches). Fault data generated shall be in form of an ASCII tab delimited file with look-up table in terms of fault isolation (location of fault/break; such as at transmitter, receiver, or cabling), loss in dB and distance from transceiver. NOTE: Intent is to define a standardized means to extract and interpret the data so that a laptop PC, or a universal aircraft recorder (UAR), can be used. Consideration will be given for other options and your alternative for a more user friendly option is welcome and encouraged. Submit alternatives by e-mail through the Joint Fiber Optic Working Group (JFOWG) at DLGR_NSWC_FO_ENG@navy.mil with the subject line "JFOWG MIL-STD-1678-1 REQUEST".

4.3 Compatibility with legacy transceivers. BIT capable transceivers shall be interchangeable with existing legacy transceivers.

REQUIREMENT 1201

Source: https://assist.dla.mil -- Downloaded: 2016-12-31T20:53Z
Check the source to verify that this is the current version before use.

4.4 Verification methods. Adequacy of BIT provided shall be evaluated by the three parameters of detection rate, isolation rate, and false alarm rate. Detection rate is the percent of failures found by BIT divided by the total number of failures (including non-electronic failures) of these systems. The minimum acceptable detection rate shall be 90 percent. Isolation rate for the transmitter and receiver is the percent of occurrences that the faulty transmitter or receiver is correctly identified from two or more transmitters or receivers in the cabling system divided by the total number of occurrences. Isolation rate for the intermediate cabling shall be the percentage of occurrences that are correctly isolated to the location of the fault/break divided by the total number of occurrences. The minimum acceptable isolation rate shall be 95 percent. False Alarm rate is the percent of false alarms when the cabling system remains working divided by the total number of BIT detections. Alternatively, the false alarm rate may be measured as the mean time between false alarms or as the mean flight hours between false alarms. The maximum acceptable false alarm rate shall be 5 percent.

5. Reliability requirements.

5.1 Design. The reliability of the basic design shall be determined by use of the Reliability Block Diagram Model or Reliability Prediction Report where the reliability of individual components, circuits/circuit cards (such as a line replaceable unit), replaceable electronics, or aviation boxes (such as line replaceable modules and weapons replaceable assemblies) are calculated in terms of mission time.

5.2 Use of MIL-HDBK-217: "Reliability Prediction of Electronic Equipment". MIL-HDBK-217, or a software package that uses MIL-HDBK-217 as the model for the calculations, shall be used as the means to conduct the predicted reliability of a design (under ideal conditions) based simply on the number of components and their individual failure rates.

5.3 Factors and variables used in reliability calculation. MIL-HDBK-217 shall be augmented with contemporary values (such as the multiplication factors referred to in MIL-HDBK-217 as Pi factors) of fiber optic components. Failure rate contributions may be used for some degradation variables or components in lieu of multiplication factors. Basis for degradation variables can be on overall legacy performance data and Highly Accelerated Life Testing (HALT) data versus restricted to a specific cable configuration or specific manufacturer.

5.4 Acceptable ways to improve reliability. Measures to be considered shall include redundancy, use of better quality parts, increasing of design margins (de-rating of performance expectations based on mission performance). Actions considered shall include increased preventative maintenance and routine inspections/sampling of statistically significant sample sizes. Testing performed includes Highly Accelerated Life/Stress Testing (HALT/HAST), Environmental Stress Screening (ESS), Reliability Development/Growth Testing (RDGT), or Highly Accelerated Stress Screening (HASS).

5.5 Acceptance criteria. Acceptance criteria are platform specific. Acceptable MTBF will be different depending on the mission duration, expected environment, expected life of the system, safety considerations, mission criticality, cost and other factors. As an example, the predicted reliability numbers for systems in a patrol aircraft are very different from the same systems in a fighter aircraft.

6. Notes.

6.1 Lessons learned.

6.1.1 Utilize BIT to reduce ambiguity zones. BIT is required to break the ambiguity zones from three to one. This allows maintainers to determine which is failing, the transmitting box, receiving box, or cable plant, and to affect the appropriate repair.

Source: https://assist.dla.mil -- Downloaded: 2016-12-31T20:53Z
Check the source to verify that this is the current version before use.

REQUIREMENT 1202

LOSS BUDGET CALCULATION

1. Purpose. This requirement establishes criteria for calculating the loss budget to ensure the fiber optic light transmission path (in a fiber optic system) operates within the minimum required optical performance specification over the expected life of the system (the loss budget margin > 0 at end of life). This requirement is intended for developmental, prototype, production, rework, and modification programs on military platform fiber optic cable assemblies.

2. Applicable documents.

2.1 General. The documents listed in this section are specified in sections 3, 4, and 5 of this specification. This section does not include documents cited in other sections of this specification or recommended for additional information or as examples. While every effort has been made to ensure the completeness of this list, document users are cautioned that they must meet all specified requirements of documents cited in sections 3, 4, and 5 of this specification, whether or not they are listed.

2.2 Government documents.

2.2.1 Specifications, standards, and handbooks. The following specifications, standards, and handbooks form a part of this document to the extent specified herein. Unless otherwise specified, the issues of these documents are those cited in the solicitation or contract.

DEPARTMENT OF DEFENSE STANDARD

MIL-STD-2052 - Fiber Optic System Design.

(A copy of this document is available online at http://quicksearch.dla.mil or from the Standardization Document Order Desk, 700 Robbins Avenue, Building 4D, Philadelphia, PA 19111-5094.)

2.3 Non-Government publications. The following documents form a part of this document to the extent specified herein. Unless otherwise specified, the issues of these documents are cited in the solicitation or contract.

SAE INTERNATIONAL

SAE AS5603 - Digital Fiber Optic Link Loss Budget Methodology for Aerospace Platforms.
SAE AS5750 - Loss Budget Specification for Fiber Optic Links.

(Copies of these documents are available online at www.sae.org from SAE International, 400 Commonwealth Drive, Warrendale, PA 15096-0001, and Tel: 877-606-7323 [inside USA and Canada] or 724-776-4970 [outside USA], email at CustomerService@sae.org.)

2.4 Order of precedence. Unless otherwise noted herein or in the contract, in the event of a conflict between the text of this document and the references cited herein, the text of this document takes precedence. Nothing in this document, however, supersedes applicable laws and regulations unless a specific exemption has been obtained.

3. Definitions.

3.1 Optical loss. The calculated loss in optical power between a known, measured amount of power (through one or two MQJs) compared to the measured optical power through a cable assembly (link, harness, or others under test).

3.2 End-to-end cable assembly (fiber optic). The path light travels from the transmitter to the receiver. This path includes the connections up to the transmitting device, connections up to the receiving device and one or more sections of fiber optic cable.

Source: https://assist.dla.mil -- Downloaded: 2016-12-31T20:53Z
Check the source to verify that this is the current version before use.

3.3 Loss budget. The loss budget is the allocation of optical losses within a fiber optic cable assembly. These losses include component losses (cables, connectors, and others), optical power penalties, and other performance degradations (such as environmental losses), and an optical margin for unforeseen or unpredictable changes within the communications transmission path.

3.4 Environmental margin. The environmental margin is a built in margin to allow for changes in the fiber optic cable plant due to environmental effects.

3.5 Unallocated margin (design margin). The unallocated margin is a built in margin to allow for unforeseen changes in the fiber optic cable plant, including aging of the passive components. Unallocated margin provides design margin for when design assumptions are violated during the lifetime of the cable assembly.

4. General criteria. Each end-to-end cable assembly shall include the calculation of a loss budget as part of the system design.

4.1 Acceptable models to calculate loss budget. The loss budget shall be calculated using the worst case method. When the statistical model is calculated, then a worst case model shall also be calculated and used as a basis of comparison.

4.1.1 Aircraft platforms. Methods and parameters used in the loss budget calculation shall conform to SAE AS5750. When specified or when sufficient data exists to allow end of life calculations, statistical or numerical (simulation) method may be cited. End of life calculations shall be performed using parameters specified in category B of SAE AS5750.

4.2 Parameters to be included in loss budget calculations.

4.2.1 Models. Three different models of loss budgets using the worst case model may be used; however, the model used for comparison shall be the worst case loss budget as specified in 4.2.1a. The other three types in 4.2.1b through 4.2.1d may be prepared along with the model in accordance with 4.2.1a.

a. Worst case (3 dB environmental margin). This loss budget is an analysis that uses a worst case value for the components and assumes a worst case value of 3 dB for environmental effects.

b. Worst case (calculated environmental margin). This loss budget is an analysis that uses a worst case value for components and assumes a statistical value for environmental effects.

c. Worst case (no environmental margin). This loss budget assumes that there is no optical loss due to environmental factors. A worst case value is used for the components. If this loss budget is used, then there is no leeway to go beyond the determined loss budget. When an environmental margin is included in the loss budget, the margin provides a buffer to absorb any environmentally induced losses in the fiber optic cable plant.

d. Statistical. This loss budget is an analysis that uses statistical values for both the component losses and for the environmental effects.

4.2.2 Unallocated margin. An unallocated margin shall be included in the loss budget. The unallocated margin is a built in margin to allow for unforeseen changes in the fiber optic cable plant, including aging of the passive components. Unallocated margin also provides an indication of how much optical signal can degrade if cable plant components get abused. Loss budget calculations assume a 3 dB unallocated margin. Unallocated parameters shall include:

a. Connector and cable aging.

b. Connector multiple mating and de-mating.

c. Cable spooling operations.

Source: https://assist.dla.mil -- Downloaded: 2016-12-31T20:53Z
Check the source to verify that this is the current version before use.

d. Connections added after cable plant is installed.

e. Poor quality fiber (larger optical loss).

f. Cable plant damage.

4.2.3 Environmental margin. An environmental margin shall be included in the loss budget. Environmental effects include temperature, humidity, vibration, mechanical shock, and cable in static tension and compression. Three different types of environmental margins are described below; however, only one of the first two type shall be used.

a. 3 dB margin. This margin assumes a worst case value of 3 dB for environmental effects.

b. Calculated margin. This margin uses a statistical value for each component. A mean environmental optical loss is applied along with a specified standard deviation. The statistical margin calculates what would be expected on a representative basis. There is less than a one percent probability that the actual cable plant, environmental optical loss will be worse.

c. No environmental margin. This margin assumes that there is no optical loss due to environmental factors. If this value is used, then there is no leeway to go beyond the determined optical power budget.

4.3 Methods.

4.3.1 General. The optical loss shall be measured using the method specified in SAE AS5603 and tailored as required. If applicable and as an alternative, the loss budget may be calculated using the method specified in MIL-STD-2052.

4.3.2 Aircraft platforms. The loss budget shall be calculated using the method specified in SAE AS5603.

4.4 Beginning of life. Loss budget shall be calculated using only the worst case model when limited information exists on the characteristics of the components in the system being built. As more experience and data is obtained with the components and more insight with the statistical distribution is achieved, then and only then, shall a statistical model be acceptable.

4.4.1 Unallocated margin. In the early stages of the design process, a 3 dB unallocated margin shall be used. The value shall be used to account for the higher uncertainty in the component distribution and performance in addition to those parameters specified in 4.2.2.

4.5 Critical systems. As part of the system design process, the loss budget shall be calculated for the flight critical systems, mission critical systems and non-mission critical systems with the unallocated margin as specified in SAE AS5750.

5. Implementation. This requirement directs all platforms utilizing fiber optics to measure the optical loss in each cable assembly (optical loss of each link), to measure the end-to-end optical loss, and to do so in a timely and cost-effective manner. This includes obtaining cost estimates associated with the implementation on existing contracts.

6. Notes.

6.1 Lessons learned.

6.1.1 Calculation models. The only two models to calculate the loss budget will be the statistical model with 3σ or greater statistics and the worst case model with a 3 dB environmental margin. Typically this “worst case approach” is a bit more conservative than the “statistical approach. The “worst case approach” gives the fiber optic system designer a higher “confidence” that a given cable assembly will work NO MATTER WHAT when compared to the “statistical model”. The “statistical model” allows the fiber optic system designer to specify the degree of “confidence” inherent in the system design (3σ statistics gives a 0.999 confidence level). If good statistical data is not available for all components, “In-between” statistical and worst case approaches are also valid.

REQUIREMENT 1202

Source: https://assist.dla.mil -- Downloaded: 2016-12-31T20:53Z
Check the source to verify that this is the current version before use.

6.1.2 Design (unallocated) margin. Design margin must be included in mission essential cable assembly loss budgets. A 3 dB design margin is recommended to account for unexpected losses in mission essential cable assemblies.

6.1.3 Other criteria in loss budget. Active and passive component environmental effects must be included in the link budget calculation. Transmitter and receiver aging factors must be included in the loss budget calculation.

6.2 Intended use.

6.2.1 Calculation models. The only two models to calculate the loss budget will be the statistical model with 3σ or greater statistics and the worst case model with a 3 dB value for each margin in the loss budget (such as design and environmental). Typically this “worst case approach” is a bit more conservative than the “statistical approach. The “worst case approach” gives the fiber optic system designer a higher “confidence” that a given cable assembly will work NO MATTER WHAT when compared to the “statistical model”. The “statistical model” allows the fiber optic system designer to specify the degree of “confidence” inherent in the system design (i.e., 3σ statistics gives a 0.999 confidence level). If good statistical data is not available for all components, “In-between” statistical and worst case approaches are also valid.

6.2.2 Design (unallocated) margin. Design margin must be included in mission essential cable assembly loss budgets. A 3 dB design margin is recommended to account for unexpected losses in mission essential cable assemblies.

6.2.3 Other criteria in loss budget. Active and passive component environmental effects must be included in the link budget calculation. Transmitter and receiver aging factors must be included in the loss budget calculation.

Source: https://assist.dla.mil -- Downloaded: 2016-12-31T20:53Z
Check the source to verify that this is the current version before use.

CABLING IMPLEMENTATION VERIFICATION REQUIREMENTS

(1301-1305)

Source: https://assist.dla.mil -- Downloaded: 2016-12-31T20:53Z
Check the source to verify that this is the current version before use.

REQUIREMENT 1301

OPTICAL MEASUREMENTS INSPECTION

1. Purpose. This requirement establishes test criteria for optical measurements in a fiber optic cable assembly. This requirement is intended for developmental, prototype, production, rework, and modification programs on military platform fiber optic cable assemblies.

2. Applicable documents.

2.1 General. The documents listed in this section are specified in sections 3, 4, and 5 of this requirement. This section does not include documents cited in other sections of this standard practice or recommended for additional information or as examples. While every effort has been made to ensure the completeness of this list, document users are cautioned that they must meet all specified requirements of documents cited in sections 3, 4, and 5 of this standard practice, whether or not they are listed.

2.2 Government documents.

2.2.1 Specifications, standards, and handbooks. The following specifications, standards, and handbooks form a part of this document to the extent specified herein. Unless otherwise specified, the issues of these documents are those cited in the solicitation or contract.

DEPARTMENT OF DEFENSE STANDARD

MIL-STD-2042 - Fiber Optic Cable Topology Installation, Standard Methods for Naval Ships, Part 6.

(A copy of this document is available online at http://quicksearch.dla.mil or from the Standardization Document Order Desk, 700 Robbins Avenue, Building 4D, Philadelphia, PA 19111-5094.)

2.3 Other Government documents, drawings, and publications. The following other Government documents, drawings, and publications form a part of this standard practice to the extent specified herein. Unless otherwise specified, the issues are these documents are those cited in the solicitation or contract.

NAVAIR 01-1A-505-4/T.O. 1-1A-14/TM1-1500-232-23-4- Installation and Testing Practices Aircraft Fiber Optic Cabling

(A copy of this document is available online at: https://mynatec.navair.navy.mil. NATEC has three different processes to obtain the manual, depending on if you are Government personnel (military and civilians), Contractors with a Government contract, or everyone else. If unable to access this Web Site or require further assistance, contact (1) NATEC Customer Service: 619.545.1888, (2) NATEC Website Status Hotline: 619.545.1706, or (3) NATEC Customer Service E-mail: nani_customerservice@navy.mil.)

2.4 Order of precedence. Unless otherwise noted herein or in the contract, in the event of a conflict between the text of this document and the references cited herein, the text of this document takes precedence. Nothing in this document, however, supersedes applicable laws and regulations unless a specific exemption has been obtained.

3. Definitions.

3.1 Optical loss. The calculated loss in optical power between a known, measured amount of power (through one or two MQJs) compared to the measured optical power through a cable assembly (link, harness, and others under test).

3.2 End-to-end cable assembly (fiber optic). The path light travels from the transmitter to the receiver. This path includes the connections up to the transmitting device, connections up to the receiving device and one or more sections of fiber optic cable (such as one or more single segment, fiber optic cable harnesses).

Source: https://assist.dla.mil -- Downloaded: 2016-12-31T20:53Z
Check the source to verify that this is the current version before use.

3.3 Measurement Quality Jumper (MQJ). The MQJ is a low loss jumper that is used with test equipment to perform optical loss measurements. The MQJ must meet stringent optical loss requirements to ensure accuracy of measurements performed. Measurements must be accurate and repeatable. The accuracy and repeatability of your measurement is only as good as your MQJ. As the MQJ degrades with use, so does the measurement accuracy. The MQJ consists of a single fiber cable with a connector at one end that mates to the test equipment and a connector at the other end which mates to the cable assembly segment or segments under test.

3.4 Cable assembly, single segment (fiber optic). Single fiber assemblies consist of cabling with connectors on each end. Different configurations for this cable assembly may be multiple termini connector cable assemblies (such as plug-to-plug or plug-to-receptacle configurations) and multiple termini plug/receptacle-to-single fiber connector assemblies.

3.5 Cable assembly, multiple segment (fiber optic). Two or more single segment cable assemblies mated together at the fiber optic connectors.

3.6 Cable assembly (fiber optic). One segment or an assembly constructed from a fiber optic cable with connectors on each end.

4. General requirements. Optical measurement shall include those for optical loss and optical return loss.

4.1 Optical loss, general. The optical loss shall be measured using the method specified in Part 6 of MIL-STD-2042 using the optical loss one jumper method.

4.2 Optical loss, aircraft platforms. The optical loss on aircraft platforms shall be measured using the method specified in subordinate work package 009 01 of NAVAIR 01-1A-505-4/T.O. 1-1A-14-4/TM 1-1500-232-24-4 using the optical loss two jumper method.

4.3 Optical return loss. The return optical loss shall be measured using the method specified in subordinate work package 009 04 of NAVAIR 01-1A-505-4/T.O. 1-1A-14-4/TM 1-1500-232-24-4.

4.4 Measurement Quality Jumper (MQJ). Acceptable low optical loss of each MQJ used for optical measurements in 4.1 through 4.3 shall be verified using the method specified in subordinate Work Package 009 04 of NAVAIR 01-1A-505-4/T.O. 1-1A-14-4/TM 1-1500-232-24-4.

5. Implementation. This requirement directs all platforms utilizing fiber optics to measure the (1) optical loss in each cable assembly (optical loss of each link), (2) to measure the end-to-end optical loss (once fabricated or installed), and (3) to do so in a timely and cost-effective manner. This includes obtaining cost estimates associated with the implementation on existing contracts.

5.1 Documentation. Incorporate optical performance requirements into contractual (manufacturing and compliance) documentation.

REQUIREMENT 1301

Source: https://assist.dla.mil -- Downloaded: 2016-12-31T20:53Z
Check the source to verify that this is the current version before use.

5.2 Optical performance data. Perform optical measurements and obtain optical performance data (data including connector/terminus ferrule end face geometry, optical loss, if specified return loss) at least three times within the fiber optic cable assembly or harness fabrication to installation cycle. This minimum of three measurements are specified in 5.2.1 through 5.2.3.

5.2.1 Obtain initial optical performance data from cable assembly (harness) fabrication source (house). Ferrule end face geometry for single ferrule connectors and termini for multiple termini connectors shall be inspected and conform to Requirement 1102.

5.2.2 Verify optical performance upon receipt at the installation site (manufacturing plant or field maintenance activity). Current interferometers cannot inspect the ferrule end face of a terminus for end face geometry once the terminus is inserted into a multiple termini connector. Requirement for end face geometry should be negated at this stage until an interferometer configuration is available that will allow end face geometry inspection after terminus insertion into the multiple termini connector.

5.2.3 Verify optical loss upon (immediately after) installation into the applicable military mobile vehicle (such as an aircraft).

6. Notes.

6.1 Lessons learned.

6.1.1 Costly not to inspect. It is very costly to have to remove fiber optic cabling or equipment when degraded optical performance occurs. If deficiencies are not found through initial inspection and testing prior to installation versus finding them after installation, they will have to be replaced resulting in maintenance costs. In addition, if the repair equipment is connected without following the proper procedures such as confirming that the connectors are clean, they may damage the cable plant hardware resulting in yet more expensive repair on the in situ cable plant.

6.1.2 Not meeting loss in an operating environment. If initial loss (in benign environment at beginning of life) is not within the specified limits, then there is no guarantee of having the margin to obtain an acceptable loss in an operating environment. Recall that the loss budget calculation includes environmental and mechanical margins (operating environment) based on a value for the initial loss (loss budget = initial + environmental margin + mechanical margin + other margins/factors).

6.2 Intended use. On these platforms, the fiber optic cable assemblies intended to be measured for optical loss include (1) aircraft cable harnesses, (2) other type constructions of a cable assembly, and (3) other miscellaneous cabling.

Source: https://assist.dla.mil -- Downloaded: 2016-12-31T20:53Z
Check the source to verify that this is the current version before use.

REQUIREMENT 1302

END FACE GEOMETRY INSPECTION

1. Purpose. This requirement establishes criteria for fiber optic terminus and single ferrule connector end face inspection. This requirement is intended for developmental, prototype, production, rework, and modification programs on military platform fiber optic cable assemblies.

2. Applicable documents.

2.1 General. The documents listed in this section are specified in sections 3, 4, and 5 of this requirement. This section does not include documents cited in other sections of this standard practice or recommended for additional information or as examples. While every effort has been made to ensure the completeness of this list, document users are cautioned that they must meet all specified requirements of documents cited in sections 3, 4, and 5 of this standard practice, whether or not they are listed.

2.2 Government documents.

2.3 Other Government documents, drawings, and publications. The following other Government documents, drawings, and publications form a part of this standard practice to the extent specified herein. Unless otherwise specified, the issues are these documents are those cited in the solicitation or contract.

NSWCCD-SSES ltr 9504 Ser 96315/067 of 31 October 2003.	Method to Measure Ferrule End Faces on Fiber Optic Connectors and Termini.

(A copy of this letter can be obtained at NSWC DD Web Site in in the Policy and Guidance section under Testing Information. This NSWC Dahlgren fiber optic web site houses additional shipboard fiber optic information and policy letters that may be applicable to the requirements in this standard. Due to the dynamic nature of web addresses the current website URL can be obtained by e-mailing DLGR_NSWC_FOWEB@navy.mil with the subject line "WEBSITE URL REQUEST". An automated reply will contain the current web address.)

2.4 Order of precedence. Unless otherwise noted herein or in the contract, in the event of a conflict between the text of this document and the references cited herein, the text of this document takes precedence. Nothing in this document, however, supersedes applicable laws and regulations unless a specific exemption has been obtained.

3. Definitions.

3.1 End face, domed. A ferrule in which the mating connection surface has a radius (or domed) shape (see figure 1302-1).

3.2 End face, ferrule. Ferrule surface contacting the mating ferrule and the mating fiber. Also, the surface that is perpendicular to the longitudinal axis of the optical fiber.

3.3 End face, flat. Ferrule surface contacting the mating ferrule which has essentially a planar (flat) shape with nominally zero tilt (perpendicular to the longitudinal axis of the optical fiber.

3.4 End face, geometry. Measurement of the ferrule end face for radius of curvature, measurement of the fiber displacement from a defined surface for fiber height, and measurement of the distance between the highest point on the surface contour from the center of the fiber for offset (see figure 1302-1).

Source: https://assist.dla.mil -- Downloaded: 2016-12-31T20:53Z
Check the source to verify that this is the current version before use.

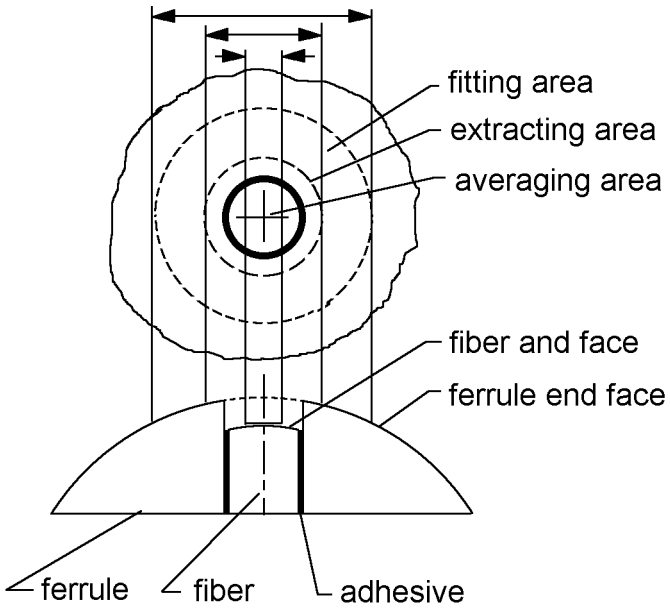

FIGURE 1302-1. End face geometry.

4. General requirements. Inspection requirements shall include end face geometry measurement using an interferometer, process control demonstration, classical statistical sampling, and sustaining metrics.

4.1 Endface geometry measurement. Ferrule end face geometry for (1) domed ferrules with a Physical Contact (PC) polish, (2) domed ferrules with a Non-Contact (NC) polish, and (3) flat ferrules with a NC polish shall conform to parameters specified in measurement 5201 (see Part 5 of this standard practice).

4.2 End face geometry sampling. Inspection requirements for end face geometry utilizing an interferometer shall be 100 percent until statistical methods and process controls indicate that classical sampling methodology can be applied. Metrics shall be available to demonstrate a capable sustained process.

5. Implementation. This requirement directs all platforms utilizing fiber optics to adopt these end face geometry inspection requirements and to implement them in a timely and cost-effective manner. This includes obtaining cost estimates associated with the implementation on existing contracts.

5.1 Preferred end face geometry. Unless otherwise specified, the end face geometry shall conform to domed ferrules with a Physical Contact (PC) polish.

6. Notes.

6.1 Lessons learned.

6.1.1 Costly not to inspect after fabrication. Failure to inspect for end face geometry as part of the post fabrication/assembly inspections can be costly. An incorrect end face geometry can damage the mating end face simply through the compressive forces of the connector (through mechanisms as contamination. entrapment, shear loading, excess fiber height, in addition to excess tensile load). Rather than inspect to ensure compliance from the start, it is more costly to have to remove the in situ cabling or equipment when damage occurs after installation is due to improper end face geometry.

Source: https://assist.dla.mil -- Downloaded: 2016-12-31T20:53Z
Check the source to verify that this is the current version before use.

6.1.2 Subcontractor inspections. Maintain constant vigilance with vendors constructing both cabling (harnesses) and equipment modules (such as a WRA or LRU). In particular, ensure receipt of connector/termini with end faces that are properly polished and meet end face geometry requirements. Unless constant vigilance is maintained, the common experience is for the vendor to default back to improper fabrication.

6.2 Intended use. On these platforms, the fiber optic cable assemblies intended to be inspected include (1) cable harnesses, (2) equipment (electronic module/package) such as an ATC, LRC, LRM,LRU or WRA with internal fiber optics, (3) circuit card modules and assemblies with internal fiber optics, (4) fiber optic test jumpers, and (5) other miscellaneous cabling.

Source: https://assist.dla.mil -- Downloaded: 2016-12-31T20:53Z
Check the source to verify that this is the current version before use.

REQUIREMENT 1303

FIBER OPTIC CABLING POST INSTALLATION INSPECTION

1. Purpose. This requirement establishes criteria for inspection of fiber optic cabling after installation or performance of a maintenance action. This requirement is intended for developmental, prototype, production, rework, and modification programs on military platform fiber optic cable assemblies.

2. Applicable documents.

2.1 General. The documents listed in this section are specified in sections 3, 4, and 5 of this standard practice. This section does not include documents cited in other sections of this standard practice or recommended for additional information or as examples. While every effort has been made to ensure the completeness of this list, document users are cautioned that they must meet all specified requirements of documents cited in sections 3, 4, and 5 of this standard practice, whether or not they are listed.

2.2 Other Government documents, drawings, and publications. The following other Government documents, drawings, and publications form a part of this standard practice to the extent specified herein. Unless otherwise specified, the issues are these documents are those cited in the solicitation or contract.

NAVAIR 01-1A-505-1/ T.O. 1-1A-14/TM1-1500-232-24-4	Installation and Testing Practices Aircraft Fiber Optic Cabling.

(A copy of this document is available online at: https://mynatec.navair.navy.mil. NATEC has three different processes to obtain the manual, depending on if you are Government personnel (military and civilians), Contractors with a Government contract, or everyone else. If unable to access this Web Site or require further assistance, contact (1) NATEC Customer Service: 619.545.1888, (2) NATEC Website Status Hotline: 619.545.1706, or (3) NATEC Customer Service E-mail: nani_customerservice@navy.mil.)

2.3 Order of precedence. Unless otherwise noted herein or in the contract, in the event of a conflict between the text of this document and the references cited herein, the text of this document takes precedence. Nothing in this document, however, supersedes applicable laws and regulations unless a specific exemption has been obtained.

3. Definitions.

3.1 Chafing. Repeated motions between cabling components, between cabling and equipment, or between cabling and the structure that result in wear causing mechanical failure or degraded or complete loss of the optical signal. Wear is the result of rubbing, excessive twisting, or bending. Also, chafing may be a result of poor installation practices. Chafing may result from poor clamping, poor lacing, and poor routing. One determined best practice to implement as a corrective action is “clearance is the best route - get no chafing”. Cabling must be routed, clamped, and laced to prevent contact with equipment or structures.

4. Requirement.

4.1 Inspection method. Inspection of the cabling after installation and performance of a maintenance action shall be performed in accordance with subordinate Work Package WP 014 01 of NAVAIR 01-1A-505-4/T.O. 1-1A-14-4/TM 1-1500-323-24-4.

5. Inspection criteria.

5.1 Determination of proper installation. Inspection shall be performed in accordance with 4.1 to determine post platform installation adequacy.

5.2 Accessibility. Inspection shall be performed to determine cabling accessibility for both inspection and maintenance.

5.3 Inaccessible areas. Inspection shall be performed to determine adequacy of both protective measures and ability to facilitate maintenance in inaccessible areas.

Source: https://assist.dla.mil -- Downloaded: 2016-12-31T20:53Z
Check the source to verify that this is the current version before use.

5.4 Maintenance.

5.4.1 Inspection. After maintenance, inspection shall be performed in accordance with 4.1 to determine maintenance action adequacy and particularly to observe any degree of chafing that may have occurred during installation, maintenance, or operation.

5.4.2 Operation/system integrity. Functional check shall be performed to ensure system operation after completion of 5.4.1.

5.5 Optical performance.

5.5.1 Verify optical loss of cable assembly. Verify optical loss upon cable assembly (harness) receipt at the installation site (field maintenance activity) or at a minimum before installation into the applicable military mobile vehicle (such as an aircraft).

5.5.2 Verify optical loss after installation. Verify optical loss upon (immediately after) installation into the military mobile vehicle.

6. Notes.

6.1 Lessons learned.

6.1.1 Address maintenance issues. Post installation inspection is critical to identify issues and take action to address. Failure to do so can cause the required maintenance to increase.

6.1.2 Share lessons learned. Post installation inspection is an opportunity for the inspector to share lessons learned with the installer or maintainer. This sharing can help avoid repeating the same mistakes.

6.1.3 Enforce commonality. Post installation inspection can determine if common (specified) hardware is used and common procedures are followed. Non-specified hardware may fail to function as originally designed.

6.1.4 Evaluate training. Post installation inspection can determine if training of proper installation and maintenance procedures are being taught and are effective, if so, understood by installing and maintenance personnel. This inspection can help prevent regression to “wiring” mentality.

6.2 Intended use. On these platforms, the fiber optic cable assemblies intended to be inspected include (1) cable harnesses, (2) equipment (electronic module/package) such as an ATC, LRC, LRM, LRU or WRA with internal fiber optics, (3) circuit card modules and assemblies with internal fiber optics, (4) fiber optic test jumpers, and (5) other miscellaneous cabling.

REQUIREMENT 1303

Source: https://assist.dla.mil -- Downloaded: 2016-12-31T20:53Z
Check the source to verify that this is the current version before use.

REQUIREMENT 1304

FIBER OPTIC CABLING CONFORMANCE INSPECTION.

1. Purpose. This requirement establishes criteria for inspection of fiber optic cabling components after manufacture or fabrication. This requirement is intended for the components use for developmental, prototype, production, rework, and modification programs on military platforms. Inspections for fiber optic cable assemblies are performed on 100 percent of product supplied.

2. Applicable documents. Not applicable to this requirement.

3. Definitions.

3.1 Group A testing. Testing will be performed for each group or lot produced.

3.2 Inspection by attributes. Inspection in which each sample is measured then rated as conforming or nonconforming with respect to a given specification requirement or set of requirements. Data (value and unit of measure for each measurement) are not required.

3.3 Nonconformance. A departure of a specification requirement from its acceptance level or criteria.

4. Requirement.

4.1 Default sampling plan. Inspections (tests) specified shall be performed on 100 percent of the product supplied.

4.2 Alternate sampling plan. If allowed by the qualifying activity, random sampling in accordance with table 1304-1 may be performed in lieu of 100 percent of product supplied under this specification.

4.3 Process control demonstration and metrics. Critical parameters shall be identified within the process. Also provided shall be the method for measurement and the degree of variability for each parameter. Controls within the process (variability control) shall be demonstrated by continual statistical tracking of these critical parameters or other metrics that show a capable sustained process. Sustained process control is considered to be when a C_{pk} level of 5 or higher is achieved (a level sufficient to demonstrate an equivalent nonconformance of zero).

4.4 Allowance for inspection by attributes. The random sampling alternative and inspection by attributes are applicable for the specified quality conformance inspections only. For qualification and for initial validation of the process, inspection shall be performed on 100 percent of samples with data supplied.

5. Inspection criteria for alternate sampling plan.

5.1 Sampling method. The inspection criteria for fiber optic components used shall be in accordance with table 1304-1. Inspections for fiber optic cable assemblies shall be performed on 100 percent of product supplied (see 4.6 of Requirement 1403).

5.2 Lot size. Number of samples inspected per lot size with acceptance criteria shall be in accordance with table 1304-I.

5.3 Acceptance criteria constraints. This random sampling alternative shall require acceptance criterion of a zero nonconformance regardless of sample size.

5.4 Criteria when nonconformance is found. If any nonconformance is found, then 100 percent inspection shall be used until the qualifying activity is satisfied that the cause for the nonconformance has been corrected and will not reoccur. Also, until the nonconformance has been corrected, inspection with the requirement that data be provided (in lieu of inspection by attribute) may be specified by the qualifying activity.

Source: https://assist.dla.mil -- Downloaded: 2016-12-31T20:53Z
Check the source to verify that this is the current version before use.

TABLE 1304-I. General Inspection. 1/

Lot size		Sample size
0	8	8
9	15	13
16	25	13
26	50	13
51	90	13
91	150	13
151	280	50
281	500	50
501	1,200	80
1,201	3,200	125
3,201	10,000	200
10,001	35,000	315
35,001	150,000	500
150,001	500,000	800
500,001	≥ 500,002	1,250

1/ The random sampling alternative and inspection by attributes are applicable for the specified quality conformance inspections only. For qualification and for initial validation of the process, inspection shall be performed on 100 percent of samples with data supplied.
2/ Acceptance criterion is to accept lot on zero non - conformance. Rejection criterion is one defect in the lot.

6. Notes.

6.1 Lessons learned.

6.1.1 Restrictions for nonconformity occurrence. Unless directed, inspections are not increased normally when product issues arise. Sampling plan is used to screen for nonconforming product. When a non-conformance is found, a mechanism must be in-place to increase inspection (preferably to 100 percent). Once the cause for the non-conformance is found, then corrective action is implemented, and reliability of the corrective action must be demonstrated before reinstituting continuance of normal inspections (such as sampling plans) are appropriate.

6.1.2 Requirement for zero nonconformance. Inspectors must maintain vigilance to ensure that no non-conformances are allowed. Unless reiterated, inspection criteria are sometimes found to allow limited defects even though no such relaxation is allowed in the military specification or other acquisition document. These non-conformances can cause the system not to function as designed.

6.2 Intended use. On these platforms, the fiber optic cable assemblies intended to be inspected include (1) cable harnesses, (2) equipment (electronic module/package) such as an ATC, LRC, LRM, LRU or WRA with internal fiber optics, (3) circuit card modules and assemblies with internal fiber optics, (4) fiber optic test jumpers, and (5) other miscellaneous cabling.

REQUIREMENT 1304

Source: https://assist.dla.mil -- Downloaded: 2016-12-31T20:53Z
Check the source to verify that this is the current version before use.

REQUIREMENT 1305

FERRULE END FACE VISUAL INSPECTION

1. Purpose. This requirement establishes visual inspection criteria for ferrule end face condition (such as for any contamination or damage) versus ferrule end face geometry (as addressed in Requirement 1302). This requirement is intended for inspections at beginning-of-life (including developmental, prototype, or production), after maintenance, and after repair (including rework and modification programs) on military platform fiber optic cable assemblies (including those interfaces on cable harnesses and those on the exterior of equipment modules). This requirement is for platforms and systems in which the ferrule end face does not need to be returned to beginning of life inspection criteria after maintenance or repair. For applications that return to beginning of life inspection criteria and for Navy shipboard applications, Requirement 5204 is used instead.

2. Applicable documents.

2.1 General. The documents listed in this section are specified in sections 3, 4, and 5 of this standard practice. This section does not include documents cited in other sections of this standard practice or recommended for additional information or as examples. While every effort has been made to ensure the completeness of this list, document users are cautioned that they must meet all specified requirements of documents cited in sections 3, 4, and 5 of this standard practice, whether or not they are listed.

2.2 Other Government documents, drawings, and publications. The following other Government documents, drawings, and publications form a part of this standard practice to the extent specified herein. Unless otherwise specified, the issues are these documents are those cited in the solicitation or contract.

NAVAIR 01-1A-505-4/ T.O. 1-1A-14-4/ TM 1-1500-323-24-4	Installation and Testing Practices Aircraft Fiber Optic Cabling.

(A copy of this document is available online at: https://jswag.navair.navy.mil. At the home page select "Document Library" (on left side), then select the "Committee" folder, then "JFOWG" followed by the "Maintenance Documents" folder. If unable to access this Web Site, request an application by e-mail to NSWC DD Warfare Systems Department at: (DLGR_NSWC_Foweb@navy.mil.)

2.3 Order of precedence. Unless otherwise noted herein or in the contract, in the event of a conflict between the text of this document and the references cited herein, the text of this document takes precedence. Nothing in this document, however, supersedes applicable laws and regulations unless a specific exemption has been obtained.

3. Definitions (see 6.3).

3.1 Beginning of life. This refers to when a fiber optic terminus is first put into service. This applies to when a platform or avionics box is first acquired.

3.2 Backlit (back lighting) inspection. The ferrule end face is observed visually (on a monitor) while the other end of the optical fiber is illuminated with a white (visible) light source (such as a small flashlight). This illumination enables identification of the core size (visibility of the core) and distinguishes any subsurface cracks from other defects.

3.3 Cable assembly, single segment (fiber optic). Single fiber assemblies consist of cabling with connectors on each end. Different configurations for this cable assembly may be multiple termini connector cable assemblies (such as plug-to-plug or plug-to-receptacle configurations) and multiple termini plug/receptacle-to-single fiber connector assemblies.

3.4 Cable assembly, multiple segment (fiber optic). Two or more single segment cable assemblies mated together at the fiber optic connectors.

3.5 Cable assembly (fiber optic). One segment or an assembly constructed from a fiber optic cable with connectors on each end.

3.6 Contamination. The existence of solids or liquids on the surface of a ferrule end face.

Source: https://assist.dla.mil -- Downloaded: 2016-12-31T20:53Z
Check the source to verify that this is the current version before use.

3.7 Crack. Defect, typically linear, that is of very narrow width relative to length and that is of considerable depth. Crack may be on surface or internal to the material. Potential risk assessed is for crack to impact the structural integrity of the material.

3.8 Damage. Any end face fault or imperfection in the optical fiber as a result of the cleaving, curing and polishing processes during fabrication/termination and as a result of mechanical (such as mating or impact) and environmental (such as temperature or vibration) induced stresses. Damage includes scratches, cracks, pits, chips, embedded debris, hackle, and shattered area.

3.9 Defects. Damage, other than a scratch, and contamination, not able to be removed by cleaning, as observed on a magnified ferrule end face under direct lighting.

3.10 Defects, backlit. Damage on a magnified ferrule end face observed under back lighting. This damage includes cracks in the interior of the optical fiber. Back lighting occurs when additional light is applied to the far end of the fiber not under inspection.

3.11 Depot level maintenance and repair. The depot level action (maintenance or repair) is one performed at a facility other than on-site. The depot level facilities include that of an intermediate maintenance facility (potentially where used) as well as off-site entities such as the factory and cable assembly fabrication houses.

3.12 End face, ferrule. Surface that makes contact with the mating ferrule. Ferrule end face is the surface perpendicular to the optical fiber longitudinal axis.

3.13 Fluids. Liquids or other low flow resistant materials that can deposit thin layer film (contaminant) on the ferrule end face. The fluid type contaminants include oils, solvents, coolants, lubricants, and their dried residues.

3.14 FOVIS: Fiber Optic Video Inspection System. The FOVIS can view the optical fiber on the ferrule end face of a connector or terminus. Different adapters are provided to allow viewing for different ferrule diameters, for termini within a multiple termini connector, and for connectors behind various bulkhead adapters. This system consists of a probe (camera with probe tip), display (that may include a computer with automated capture and analysis software) and interconnecting cabling. Single or dual magnification allows for general or fiber inspection. General inspection (referred to as 200X) is used to view the end face for cleanliness. A larger area of the ferrule is displayed (larger field of view) with the resulting smaller image size. Fiber inspection (referred to as 400X) is used to view the end face for fiber imperfections. A smaller area of the ferrule is displayed (smaller field of view) with the resulting larger image size.

3.15 Hackle. A fracture in the optical fiber with roughly cut, jagged edges on the surface of the optical fiber end face.

3.16 Magnification, 400X, optical. Requirements for detection, field of view and fiber image size listed below are defined as a magnification of 400X. These requirements are based on the equivalent magnification of a 400X optical microscope. FOVIS will be able to detect/distinguish a single etched line, 1 micron in width, located on the fiber end face (0.5 micron line recognition preferred) and will be able to resolve 2 micron line pairs (250 line pairs per mm). Field of view will be between 250 microns minimum, 500 microns maximum. For the inspection of ferrule end faces containing an optical fiber with a 125 micron cladding diameter, the size of cladding diameter displayed on the screen will be between 15 mm (.59 inch) and 65 mm (2.56 inch).

3.17 Magnification, 200X, optical. Requirements for detection, field of view, and fiber image size listed below are defined as a magnification of 200X. These requirements are based on the equivalent magnification of a 200X optical microscope. FOVIS will be able to detect/distinguish a single etched line, 2 micron in width, located on the fiber end face. Field of view will be between 650 microns minimum, 1,000 microns maximum. For the inspection of ferrule end faces containing an optical fiber with a 125 micron cladding diameter, the size of cladding diameter displayed on the screen will be between 8 mm (.32 inch) and 14 mm (.55 inch).

3.18 Microscope, optical. Inspection device in which image is focused, magnified, and directed to observer's eye through optical lenses.

3.19 Microscope, video. See FOVIS.

REQUIREMENT 1305

Source: https://assist.dla.mil -- Downloaded: 2016-12-31T20:53Z
Check the source to verify that this is the current version before use.

3.20 Operational level maintenance, repairs. The operational level is defined as maintenance done on site, in the field, wherever the platform is located, typically performed by field/fleet maintainers.

3.21 Scratches. Linear or curvilinear defect found on the surface that is of willow depth, of very narrow width, and relative long length. No risk assessed as to compromising the structural integrity of the material.

3.22 Particulates. Trace or minuscule amount of specks or solid debris that is sufficient in size to be visible under magnification. Particulates can include dirt, dust, shavings from vibration/chaffing of parts, and other debris.

4. General requirements. Ferrule end face visual inspection shall include those at beginning-of-life (including developmental, prototype, production, and replacement), after maintenance, and after repair (including rework and modification programs), on military platform fiber optic cable assemblies (including those interfaces on cable harnesses and those on the exterior of equipment modules). A graphical representation of the ferrule end face with maximum allowed defect coverage and scratch width, 50/125 micron fiber size, 62.5/125 micron fiber size, and 100/140/172 micron fiber size with polyimide coating is shown in FIGURE 1305-1, FIGURE 1305-2, FIGURE 1305-3, and FIGURE 1305-4, respectively.

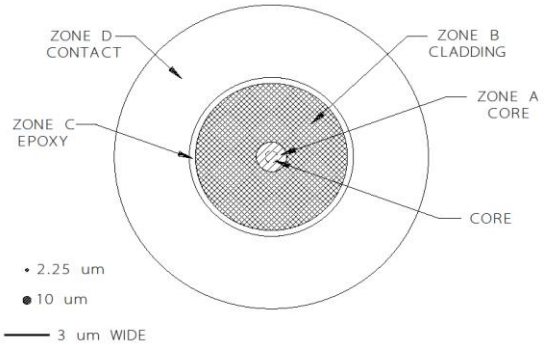

FIGURE 1305-1. Inspection zones for single mode fiber with diameters/width as acceptance criteria.

Source: https://assist.dla.mil -- Downloaded: 2016-12-31T20:53Z
Check the source to verify that this is the current version before use.

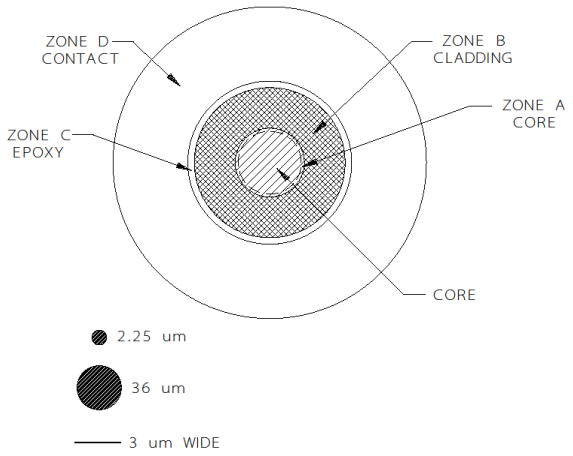

FIGURE 1305-2. Inspection zones for 50/125 micron fiber with diameters/width as acceptance criteria.

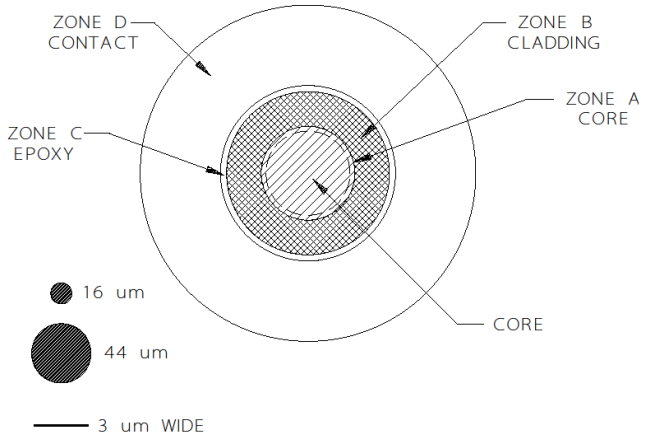

FIGURE 1305-3. Inspection zones for 62.5/125 micron fiber with diameters/width as acceptance criteria.

Source: https://assist.dla.mil -- Downloaded: 2016-12-31T20:53Z
Check the source to verify that this is the current version before use.

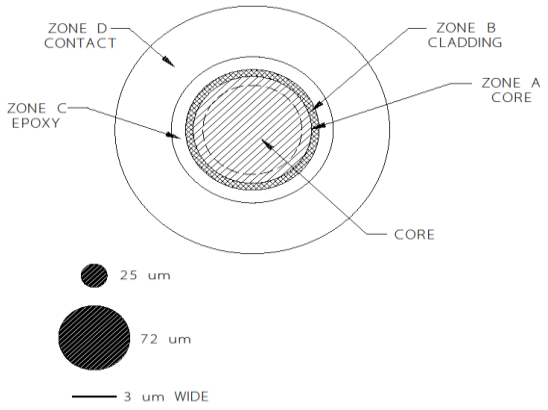

FIGURE 1305-4. Inspection zones for 100/140 fiber with diameters/width as acceptance criteria.

4.1 Inspection coverage. Inspections shall be performed for defects, for scratches, for catastrophic surface damage, and when specified, for catastrophic subsurface damage. The acceptance criteria for defects and scratches in each environment shall be as specified in 4.1.1. Rejection criteria for catastrophic damage at the surface and at below the surface (subsurface) shall be as specified in 4.1.2 and 4.1.3, respectively.

4.1.1 Defects and scratches. Acceptance criteria shall vary by zones and by environment. Suitability of any defects found shall be determined by the percent area within each zone. Defects shall include any contamination (both particulate, fluid and any combination of the two) and damage other than scratches (flaws such as pits, chips embedded debris; catastrophic damage such as cracks, hackle and shatter). Different environments include those for beginning of life, depot level maintenance, depot level repair, operational level maintenance, and operational level repair. The specific acceptance criteria that shall be used for defects and scratches in each environment are specified in 4.2 or 4.3 as applicable.

4.1.2 Catastrophic surface damage. This inspection shall be done only by direct observation of the FOVIS monitor. Inspection is to determine if there are any cracks, hackle or shattering on the surface of the optical fiber. Catastrophic surface damage is any cracks, hackle or shattering observed. Also, the inability to focus on the ferrule end face or part of the ferrule end face is considered a result of the catastrophic surface damage. Any catastrophic surface damage requires replacement of that singe ferrule connector or terminus. Surface flaws such as pits, chips and embedded debris shall not be included as catastrophic surface damage.

4.1.3 Catastrophic subsurface damage. This inspection shall be done only by direct visual observation of the FOVIS monitor. Inspection shall determine if there are any cracks below the surface of the optical fiber. Any cracks below the surface required replacement of that single ferrule connector or terminus. Like those on the surface, subsurface cracks can propagate resulting in the complete loss of transmitted light in that optical fiber. Technique to be performed is addressed in 5.1.1.

4.2 Production environment. Requirements for a production environment shall apply when conditions can be controlled while performing a task (such as fabrication, maintenance or repair). Inspections shall be performed and captured using a Fiber Optic Video Inspection System (FOVIS) with the microscope equivalent magnification of about 200X.

REQUIREMENT 1305

Source: https://assist.dla.mil -- Downloaded: 2016-12-31T20:53Z
Check the source to verify that this is the current version before use.

4.2.1 Inspection, beginning-of-life. The criteria for acceptable level of defects and scratches shall be as specified in table 1305-I with the acceptance criteria for the beginning-of-life. Inspection for both catastrophic surface damage and catastrophic subsurface damage (subsurface cracks) shall be performed at the beginning of life (during initial fabrication or termination).

TABLE 1305-I. End face visual inspection acceptance criteria, beginning of life. 1/, 5/, 7/

Zone letter	Zone name	Allowed defects beginning-of-life	Allowed scratches beginning-of-life
A 6/	Core	None	None
B 6/	Cladding	None	None
C	Epoxy	2/	No limit
D	Contact	None 4/	No limit 3/ 4/

1/ Inspections are based on the use of a FOVIS with an optical microscope equivalent of roughly (within 75X of) 200X magnification.
2/ Epoxy zone width is insufficient to specify criteria.
3/ Less than 10 percent of Contact Area allowed for new field fabrications with ceramic ferrules.
4/ No limits apply to this inspection criterion for a metal ferrule, a plastic ferrule, and a metal ferrule with a ruby jeweled insert.
5/ See 5.2 for additional allowance granted when using automated capture and analysis software.
6/ It is recognized that the visual inspection acceptance criteria for the core and for the cladding zones are the same. To maintain consistency with industry standards, separate zones are listed for the core and cladding.
7/ See 3.1.

4.2.2 Inspection, after depot level maintenance, and repair. The criteria for acceptable level of defects and scratches shall be as specified in TABLE 1305-III for depot level maintenance and repair. A replacement of fiber optic single ferrule connectors and termini and the threading of a new cable are considered a restoration. A restoration shall be done to achieve beginning-of-life requirements. Inspection for catastrophic surface damage shall be performed during depot level maintenance and repair. In addition, inspection for catastrophic subsurface damage shall be performed when both ends of the cable assembly are accessible during depot level maintenance or a repair. Access to both ends may be through a single fiber optic link or a series of links.

TABLE 1305-II. End face visual inspection acceptance criteria, operational level maintenance and repair 1/, 8/, 11/

Zone letter	Zone name	Allowed defects operational level maintenance, repairs	Allowed scratches operational level maintenance, repairs
A	Core	< 5 % of core area 2/	None
B	Cladding	< 5 % of core area 3/	None > 3 micron width 9/
C	Epoxy	4/	No limit
D	Contact	< 125 % of core area 3/,5/	No limit 6/, 7/

See notes at end of table.

REQUIREMENT 1305

Source: https://assist.dla.mil -- Downloaded: 2016-12-31T20:53Z
Check the source to verify that this is the current version before use.

TABLE 1305-II. End face visual inspection acceptance criteria, operational level maintenance and repair – Continued.

1/ Inspections are based on the use of a FOVIS with an optical microscope equivalent of roughly (within 75X of) 200X magnification.
2/ Defects found in the core zone must total less than 5 percent of the core area to pass inspection (see note 10/).
3/ The amount of defects found in the core and cladding zones collectively also must be less than 5 percent of the core area (see note 10/).
4/ Epoxy zone width is insufficient to specify criteria.
5/ Defects found in the core, cladding, epoxy and contact zones collectively also must total less than 125 percent of the core area.
6/ Less than 10 percent of contact area allowed for new field fabrications with ceramic ferrules.
7/ No limits apply to this inspection criterion for a metal ferrule, a plastic ferrule, and a metal ferrule with a ruby jeweled insert.
8/ See 5.2 for additional allowance granted when using automated capture and analysis software.
9/ Scratch with less than a 3 micron width allowed within cladding zone as long as does not extend into the core zone.
10/ It is recognized that the visual inspection acceptance criteria for the core and for the cladding zones are the same. To maintain consistency with industry standards, separate zones are listed for the core and cladding.
11/ See 3.19.

4.3 Field/fleet environment. Inspections shall be performed and captured using a Fiber Optic Video Inspection System (FOVIS) with the microscope equivalent magnification of about 200X.

4.3.1 Inspection, after operational level maintenance and repair. The criteria for acceptable level of defects and scratches shall be as specified in TABLE 1305-IIwith the acceptance criteria for operation level maintenance and repair. Inspection for catastrophic surface damage shall be performed during operational level maintenance and repair. In addition, inspection catastrophic subsurface damage shall be performed when both ends of the cable assembly are accessible during operational level maintenance or a repair. Access to both ends may be through a single fiber optic link or a series of links. Addressed in 4.3.2 is the subset of maintenance actions in which the impact to the fiber optic connection is limited to a fiber optic connector mating operations.

TABLE 1305-III. End face visual inspection acceptance criteria, depot level maintenance, and repair.1/, 8/, 10/, 12/

Zone letter	Zone name	Allowed defects, maintenance, repairs 10/ ,11/	Allowed scratches, maintenance, repairs
A	Core	< 2.5 % of core area 2/	None
B	Cladding	< 2.5 % of core area 3/	None
C	Epoxy	4/	No limit
D	Contact	< 125 % of core area 3/, 5/	No limit 6/, 7/

1/ Inspections are based on the use of a FOVIS with an optical microscope equivalent of roughly (within 75X of) 200X magnification.
2/ Defects found in the core zone must total less than 2.5 percent of the core area to pass inspection (see note 9/).
3/ The amount of defects found in the core and cladding zones collectively also must be less than 2.5 percent of the core area (see note 9/).
4/ Epoxy zone width is insufficient to specify criteria.
5/ Defects found in the core, cladding, epoxy, and contact zones collectively also must total less than 125 percent of the core area.
6/ Less than 10 percent of contact area allowed for new field fabrications with ceramic ferrules.
7/ No limits apply to this inspection criterion for a metal ferrule, a plastic ferrule, and a metal ferrule with a ruby jeweled insert.
8/ See 5.2 for additional allowance granted when using automated capture and analysis software.
9/ It is recognized that the visual inspection acceptance criteria for the core and for the cladding zones are the same. To maintain consistency with industry standards, separate zones are listed for the core and cladding.
10/ See 3.11 and notes 11/, 12/.
11/ If a terminus or single ferrule connector is replaced on the end of a fiber optic cable or the external connector for an equipment module (such as an avionics box), then the beginning of life acceptance criteria applies.
12/ Platform specific requirements. In case of conflict between the platform specific acceptance criteria and this table, the platform specific acceptance criteria shall take precedence.

4.3.2 Inspection, after mating operation. The criteria for acceptable level of scratches and defects shall be as specified in TABLE 1305-II with the acceptance criteria for the operational level maintenance and repair. Inspection for catastrophic surface damage shall be performed also. A catastrophic subsurface inspection is not done (required) as a part of a field/fleet connector mating operation.

REQUIREMENT 1305

Source: https://assist.dla.mil -- Downloaded: 2016-12-31T20:53Z
Check the source to verify that this is the current version before use.

TABLE 1305-IV. Maximum allowed defect diameters (based on defect area) in microns, operational level maintenance and repair. 1/, 6/, 7/

Fiber type/size	Core zone 1/, 5/		Cladding zone 1/		Contact zone 2/	
	Diameter range	Max defect diameter	Diameter range 4/	Max defect diameter	Diameter range	Max defect diameter
Single mode	0 to 25	2.25	25 to 120	2.25	130 to 250	10
50/125 micron	0 to 55	12.5	55 to 120	12.5	130 to 250	62
62.5/125 micron	0 to 70	16	70 to 120	16	130 to 250	78
100/140 micron 3/	0 to 120	25	120 to 135	25	165 to 280	135

1/ Maximum allowed defect coverage area of 5 percent of core area equates to a maximum allowed defect coverage diameter of 25 percent of the core diameter or the diameter as listed in this table.
2/ Maximum allowed defect coverage area of 125 percent of core area equates to a maximum allowed defect coverage diameter of 160 percent of core diameter or the diameter as listed in this table.
3/ Specified for fiber with polyimide coating.
4/ Inspection encompass maximum allowed coverage area of defect for both core and cladding, but diameter range is given for cladding only. See second column to left in table for core diameter range.
5/ It is recognized that the visual inspection acceptance criteria for the core and for the cladding zones are the same. To maintain consistency with industry standards, separate zones are listed for the core and cladding.
6/ See 3.19.
7/ If a terminus or single ferrule connector is replaced on the end of a fiber optic cable or the external connector for an equipment module (such as an avionics box), then the beginning of life acceptance criteria applies.

TABLE 1305-V. Maximum allowed defect diameters (based on defect area) in microns, depot level maintenance and repair. 1/, 6/, 7/, 8/

Fiber type/size	Core zone 1/, 5/		Cladding zone 1/		Contact zone 2/	
	Diameter range	Max defect diameter	Diameter range 4/	Max defect diameter	Diameter range	Max defect diameter
Single mode	0 to 25	1.5	25 to 130	1.5	130 to 250	10
50/125 micron	0 to 55	9	55 to 130	9	130 to 250	62
62.5/125 micron	0 to 70	10	70 to 130	10	130 to 250	78
100/140 micron 3/	0 to 145	16	120 to 145	16	165 to 280	135

1/ Maximum allowed defect coverage area of 2.5 percent of core area equates to a maximum allowed defect coverage diameter of 16 percent of the core diameter or the diameter as listed in this table.
2/ Maximum allowed defect coverage area of 125 percent of core area equates to a maximum allowed defect coverage diameter of 160 percent of core diameter or the diameter as listed in this table.
3/ Specified for fiber with polyimide coating.
4/ Inspection encompasses maximum allowed coverage area of defect for both core and cladding, but diameter range is given for cladding only. See second column to left in table for core diameter range.
5/ It is recognized that the visual inspection acceptance criteria for the core and for cladding are the same. To maintain consistency with industry standards, separate zones are listed for the core and cladding.
6/ See 3.11.
7/ If a terminus or single ferrule connector is replaced on the end of a fiber optic cable or the external connector for an equipment module (such as an avionics box), then the beginning of life acceptance criteria applies.
8/ Platform specific requirements. In case of conflict between the platform specific acceptance criteria and this table, the platform specific acceptance criteria shall take precedence.

REQUIREMENT 1305

Source: https://assist.dla.mil -- Downloaded: 2016-12-31T20:53Z
Check the source to verify that this is the current version before use.

TABLE 1305-VI. Zone diameters in microns.

Zone	A = Core	B = Cladding	C = Epoxy	D = Contact
Single mode	0 to 25	25 to 130	120 to 130	130 to 250
50/125 micron	0 to 55	55 to 130	120 to 130	130 to 250
62.5/125 micron	0 to 70	70 to 130	120 to 130	130 to 250
100/140 micron 1/	0 to 145	120 to 145	135 to 165 1/	165 to 280

1/ Epoxy with polyimide coating.

4.4 Coverage area for allowed diameters. For convenience, the maximum allowed diameter for a specified maximum allowable coverage area is provided in TABLE 1305-IV for operational level maintenance and repair and in TABLE 1305-IV for both beginning of life and for depot level maintenance and repair. For convenience, the zone diameters are listed separately in TABLE 1305-VI.

4.4.1 Beyond the contact zone. No acceptance criteria are specified beyond the contact zone (diameters larger than the maximum for the contact zone).

5. Implementation. Requirement 1305 directs all platforms utilizing fiber optics to implement ferrule end face visual inspection (1) at the beginning-of-life, (2) after operational level maintenance and repair, and (3) after depot level maintenance and repair. This includes obtaining cost estimates associated with the implementation on existing contracts.

5.1 Inspection method. Method of inspection shall conform to or be equivalent to that specified in subordinate Work Package 008 01 of NAVAIR 01-1A-505-4/T.O. 1-1A-14-4/TM 1-1500-323-24-4.

5.1.1 Backlit technique, catastrophic subsurface damage. Surface observation of a dark or discolored area may be that for a subsurface crack (in addition to contamination). To distinguish the subsurface damage (crack), the optical fiber shall, when specified, be backlit (or back lighted). This shall be done by shining white (visible spectrum) light from the other end of the optical fiber. A flash light or other white light source shall be used to “illuminate” the other end of the optical fiber. This “illumination” requires that the other end of the optical fiber is accessible.

5.1.2 Beyond contact zone. Removal of any loose debris before final inspection shall be implemented as part of normal practice.

5.2 Automated capture and analysis software. If ferrule end face defects and scratch inspection is performed using automated capture and analysis software that meets or exceeds the allowed inspection criteria listed in TABLE 1305-I, TABLE 1305-II and TABLE 1305-III, as applicable, then it is acceptable to use this alternative inspection tool. The onus is on the inspection facility or manufacturer to demonstrate that software inspection criteria meet or exceed the allowed inspection criteria in this table. Diameters for the zones in the automated capture and analysis software shall conform to TABLE 1305-IV, TABLE 1305-V, and TABLE 1305-VI, as applicable.

6. Notes.

6.1 Lessons learned.

6.1.1 Cleaning is paramount. Current military maintainer experience has been that about 80 percent of fiber optic maintenance actions are traced back to cleaning at fiber optic connection interfaces. Use of an inspect-clean-inspect process (such as the one found in the General Series Maintenance Manual) ensures proper operation once maintenance action is complete.

6.1.2 Verification for requirement to clean. Cleaning of ferrule end faces on connector termini make a substantial difference as verified by mating durability testing. Regular mating and de-mating of connectors causes end face contamination. Contamination that occurs in a clean environment is primarily internal to the connector. Internal contamination includes the “residue” resulting from connector wear (friction). Findings are that pitting and other permanent defects result from not cleaning after each mating. This contamination can lead to fiber cracks and fractures that require terminus replacement.

REQUIREMENT 1305

Source: https://assist.dla.mil -- Downloaded: 2016-12-31T20:53Z
Check the source to verify that this is the current version before use.

6.2 Intended use. On these platforms, the fiber optic cable assemblies intended to be measured for optical loss include (1) cable harnesses, (2) other type constructions of a cable assembly, (3) equipment (electronic module/package) such as an ATC, LRC, LRM, LRU or WRA with internal fiber optics, (4) other miscellaneous cabling.

6.3 Interpretation of undesired ferrule end face features. Undesired features on the ferrule end face (including area with optical fiber) can be grouped depending upon intent of use. Inspection features to observe on the ferrule end face are listed in two groups, defects and scratches. Classification of features by flaws and debris on the ferrule end face (such as for cleaning effectiveness systems evaluation) is listed in two groups, damage and contamination. An explanation of these grouping is provided in 6.3.1 and 6.3.2.

6.3.1 Inspection features. Inspection features to observe on the ferrule end face are listed in two groups, defects and scratches.

6.3.1.1 Damage. Damage is any end face flaw, fault, or imperfection in the optical fiber and ferrule end face as a result of the cleaving, curing, and polishing processes during fabrication/termination or as a result of mechanical (such as mating and impact) and environmental (such as temperature and vibration) induced stresses. Damage includes scratches, cracks, pits, chips, embedded debris, hackle, and areas of observed shatter.

6.3.1.2 Contamination. Contamination is the unwanted existence of particulates or liquids on the surface of a ferrule end face. Particulates consist of trace or minuscule amount of specks or solid debris that are sufficient in size to be visible under magnification. Particulates can include dirt, dust, and shavings from vibration/chaffing of parts. Fluids are liquids or other low flow viscosity materials that deposit a thin layer film (contaminant) on the ferrule end face. The fluid type contaminants include oils, solvents, coolants, lubricants, and their dried residues.

6.3.1.3 Application. A failure analysis relies on successful identification of the type of damage that occurred. Classification of features by damage or contamination is useful for purposes of evaluation and failure analysis. Cleaning systems and cleaning agents are evaluated by their effectiveness on different contaminants. Representative particulates, fluids, and combinations of the two are used in the evaluation. One criterion in polishing and end face refurbishment processes or methods is to successfully remove damage while simultaneously not imparting new damage to the ferrule end face.

6.3.2 Inspection features. Inspection features to observe on the ferrule end face are listed in two groups, scratches and defects.

6.3.2.1 Scratches. Defects, typically linear, found on the surface that are of shallow depth, of very narrow width, and relative long length. No risk assessed as to compromising the structural integrity of the material.

6.3.2.2 Defects. Defects include both damage and contamination with some exceptions. The exception to damage is other than a scratch. The exception to contamination is that it applies only as contaminants that are not able to be removed by cleaning.

6.3.2.3 Application. Classification of features by defects or scratches is useful for purposes of inspection. This classification does not require that the end user (observer) or end face analysis software make a determination if an undesirable feature present is either damage or contamination. The determination (other than scratches) is based on the location and coverage. For a human observer, coverage is more effectively defined in terms of allowed total area. For an end face analysis software computation, coverage is more effectively defined in terms of quantities of allowed defects and maximum diameters; however, for consistency, the same percent area coverage is used as when a direct observation is made.

REQUIREMENT 1305

Source: https://assist.dla.mil -- Downloaded: 2016-12-31T20:53Z
Check the source to verify that this is the current version before use.

REQUIREMENT 1306

PERSONNEL PROFICIENCY

1. Purpose. This requirement establishes initial and recurring criteria for ensuring that military maintainers, depot artisans, prime and sub-prime contractors, and others within the fiber optic community (both Government and commercial, see 6.3) have initial and maintain an adequate skill set for their assigned fiber optic responsibilities.

2. Applicable documents.

2.1 General. The documents listed in this section are specified in sections 3, 4, and 5 of this standard practice. This section does not include documents cited in other sections of this standard practice or recommended for additional information or as examples. While every effort has been made to ensure the completeness of this list, document users are cautioned that they must meet all specified requirements of documents cited in sections 3, 4, and 5 of this standard practice, whether or not they are listed.

2.2 Other Government documents, drawings, and publications. The following other Government documents, drawings, and publications form a part of this standard practice to the extent specified herein. Unless otherwise specified, the issues are these documents are those cited in the solicitation or contract.

NAVAIR 01-1A-505-1/ T.O. 1-1A-14/TM1-1500-232-24-4 Installation and Testing Practices Aircraft Fiber Optic Cabling.

(A copy of this document is available online at: https://mynatec.navair.navy.mil. NATEC has three different processes to obtain the manual, depending on if you are Government personnel (military and civilians), Contractors with a Government contract, or everyone else. If unable to access this Web Site or require further assistance, contact (1) NATEC Customer Service: 619.545.1888, (2) NATEC Website Status Hotline: 619.545.1706, or (3) NATEC Customer Service E-mail: nani_customerservice@navy.mil.)

NAVSEA Drawing 8477552 – Navy Shipboard Fiber Optic Training Certification Program

(A copy of this list can be obtained at NSWC DD Web Site in the Certified FO Trainers List section. This NSWC Dahlgren fiber optic web site houses additional shipboard fiber optic information and policy letters that may be applicable to the requirements in this standard. Due to the dynamic nature of web addresses the current website URL can be obtained by e-mailing DLGR_NSWC_FOWEB@navy.mil with the subject line "WEBSITE URL REQUEST". An automated reply will contain the current web address.)

CFOTL – Navy Shipboard Certified Fiber Optic Trainers List

(A copy of this list can be obtained at NSWC DD Web Site in the Certified FO Trainers List section. This NSWC Dahlgren fiber optic web site houses additional shipboard fiber optic information and policy letters that may be applicable to the requirements in this standard. Due to the dynamic nature of web addresses the current website URL can be obtained by e-mailing DLGR_NSWC_FOWEB@navy.mil with the subject line "WEBSITE URL REQUEST". An automated reply will contain the current web address.)

2.3 Order of precedence. Unless otherwise noted herein or in the contract, in the event of a conflict between the text of this document and the references cited herein, the text of this document takes precedence. Nothing in this document, however, supersedes applicable laws and regulations unless a specific exemption has been obtained.

3. Definitions.

3.1 Perishable skill sets. A set of skills that are those that are lost or degrade rapidly (usually within months) if not practiced or performed.

4. Requirements, skill sets.

4.1 Initial skill set.

4.1.1 Personnel. Actions shall be taken to ensure that personnel are certified in the adequate skill sets to perform the assigned processes.

4.1.1.1 General/cable harness applications. Personnel that are required to have the initial skill set for their assigned fiber optic responsibilities include military maintainers, depot artisans, prime and sub-prime contractors, and others within the fiber optic community.

Source: https://assist.dla.mil -- Downloaded: 2016-12-31T20:53Z
Check the source to verify that this is the current version before use.

4.1.1.2 Navy Shipboard applications. Personnel that are required to have Navy shipboard fiber optic training include fiber optic installers, supervisors, and Quality Assurance (QA) personnel. These personnel include (but not limited to) installers/technicians/supervisors/QA personnel employed by: Ship Builders, SUPSHIP, and Government/Contracted Installation/Repair Teams, AITs, Ship/Planning Yards, OSRs, RMCs, FMAs, ISEAs, and Industrial Activities."

4.2 Competency maintenance.

4.2.1 Actions. Actions shall be taken to ensure that personnel maintain competency of perishable skill sets (i.e., perform a recurring action, including recertification, to maintain competency).

4.3 Initial Screening.

4.3.1 Dexterity testing. For general/cable harness applications, dexterity testing shall be conducted to evaluate an individual's proficiency to perform the functions (stripping, cleaning, assembling, polishing, and packaging) required to terminate a fiber optic cable with MIL-PRF-29504 termini. Evaluation exercises should include cable preparation for fiber termination, fiber terminus inspection in a connector, fiber cleaving, terminus insertion and removal, and fiber splicing (mechanical and fusion).

4.4 Certification.

4.4.1 Initial. Actions shall be taken to ensure personnel are trained by training organizations certified for the training of the required proficiency skill sets.

4.4.2 Recurring (Recertification). Actions shall be taken to ensure personnel are trained by training organizations certified for the training of the required proficiency skill sets.

4.4.3 Change effectivity. Navy Shipboard Applications, Certification. Certification requirement shall become effective 1 January 2018.

5. Implementation. Minimum skill sets for the proficiency of personnel and the minimum content of each skill set shall comply with 5.1 and 5.2.

5.1 Initial skill set. Implement measure to ensure adequate skill sets for personnel fiber optic responsibilities.

5.1.1 General/cable harness applications. Minimum skill sets for the proficiency of personnel shall comply with TABLE 1306-I. Minimum content of each skill set shall comply with TABLE 1306-II.

5.1.2 Navy Shipboard applications. Minimum skill sets for the proficiency of personnel shall comply with table 1306-III. Minimum content of each skill set shall comply with table 1306-III.

5.2 Competency maintenance. Implement reoccurring training or otherwise augment as needed to ensure skill set sustainment. Perishable skill sets are those that are lost or degrade rapidly (usually within months) if not practiced or performed. Recertification shall include verification of perishable skill set retention.

5.2.1 General/cable harness applications. Reoccurring training and recertification performed shall include applicable content in TABLE 1306-II.

5.2.2 Navy shipboard. Reoccurring training and recertification performed shall include applicable content in with table 1306-III.

5.3 Minimum essential skill set selection based on function. The minimum essential number of skill sets selected for proficiency shall be contingent upon the trade and upon the function(s) being performed, observed, managed or inspected. Trades considered shall include maintainer, cable harness assembler, installer, non-fiber optic user and quality assurance. Functions shall include handling, disconnecting, troubleshooting, repairing and fabricating.

5.3.1 General/Cable harness applications. TABLE 1306-I and TABLE 1306-II shall be used to select the minimum number of skill sets for a given trade and function (see 4.5). TABLE 1306-IV is provided as a guide to select the number of skill levels needed for maintainers performing different functions.

REQUIREMENT 1306

Source: https://assist.dla.mil -- Downloaded: 2016-12-31T20:53Z
Check the source to verify that this is the current version before use.

6. Notes.

6.1 Lessons learned.

6.1.1 Initial adequate skill set. Ensure that military maintainers, depot artisans, prime and sub- prime contractors, and others within the fiber optic community (both Government and commercial) have initial and maintain an adequate skill set for their assigned fiber optic responsibilities.

6.1.2 Competency maintenance. Implement reoccurring training or otherwise augment as needed to ensure skill set sustainment. Perishable skill sets are those that are lost or degrade rapidly (usually within months) if not practiced or performed.

6.2 Intended use in aircraft applications. On these platforms, the fiber optic cable assemblies intended to be inspected are cable harnesses, (1) equipment (electronic module/package) such as an ATC, LRC, LRM, LRU or WRA with internal fiber optics, (2) circuit card modules and assemblies with internal fiber optics, and (3) other miscellaneous cabling.

6.3 Commercial entities within the military fiber optic community. These commercial entities include, but are not limited to, maintainers, depot artisans, prime and sub prime contractors. Specific entities included for aircraft applications and Navy shipboard applications are cited in 6.3.1 and 6.3.2, respectively.

REQUIREMENT 1306

Source: https://assist.dla.mil -- Downloaded: 2016-12-31T20:53Z
Check the source to verify that this is the current version before use.

TABLE 1306-I. General/cable harness personnel proficiency skill sets.

	Maintainer		Cable harness assembler		Installer		Non-fiber optic user		Quality assurance	
Actions	Initial	Recur	Initial	Recur	Initial	Recur	Initial	Recur	Initial	Recur
Awareness										
Basic theory	X		X		X		X		X	
Laser and fiber safety	X	X	X	X	X	X	X	X	X	X
Handling	X		X		X		X		X	
Labeling	X		X		X		X		X	
Requirement for ferrule end face cleanliness	X		X		X		X		X	
Criteria for ferrule end face inspection and geometry	X		X		X		X		X	
Basic skill sets										
Clean ferrule end face	X		X		X				X	
Inspect ferrule end face	X		X		X				X	
Perform optical loss test on cable assembly/harness	X		X		X				X	
Intermediate skill sets										
Troubleshoot connector and cabling	X		X		X				X	
Install cable harness	X		X		X				X	
Use OTDR to test cable harness	X	X	X	X	X				X	
Theory of operation	X	X	X	X	X				X	
Advance skill sets										
Perform connector/terminus terminations	X	X	X	X	X	X				
Perform repairs (mechanical splicing)	X	X	X	X						
Perform repairs (fusion splicing)	X	X	X	X						
Perform remove and replace of installed cabling	X		X		X					
Craftsman skill sets										
Perform cable harness assembly	X	X	X	X						
Perform post installation inspection	X				X				X	X

REQUIREMENT 1306

Source: https://assist.dla.mil -- Downloaded: 2016-12-31T20:53Z
Check the source to verify that this is the current version before use.

TABLE 1306-II. General/cable harness skill set content.

Actions	Minimum content 1/
Awareness	
Basic theory	Video 2/ or WP 005 01
Laser and fiber safety	ESAMS 3/, or WP 004 01
Handling	Video 2/, or WP 006 01
Labeling	Video 2/, or WP 003 03
Requirement for ferrule end face cleanliness	Video 2/, or WP 008 02
Criteria for ferrule end face inspection and geometry	WP 008 01 and 4/
Basic skill sets	
Clean ferrule end face	WP 008 02
Inspect ferrule end face	WP 008 01
Perform optical loss test on cable assembly/harness	WP 009 01
Intermediate skill sets	
Troubleshoot connector and cabling	WP 007 01
Install cable harness	WP 012 01 - 03
Use OTDR to test cable harness	WP 009 05, 08, 10
Theory of operation	WP 005 01
Advance skill sets	
Perform connector/terminus terminations	WP 010 01 - 11
Perform repairs (mechanical splicing)	WP 013 01 - 04
Perform repairs (fusion splicing)	TBD
Perform remove and replace of installed cabling	WP 012 01 - 03
Craftsman skill sets	
Perform cable harness assembly	WP 011 01-04, 07-12
Perform post installation inspection	WP 014 01

1/ Use content in specified document or equivalent document as core or minimum essential material.
2/ Fiber Optic Awareness Video DVD-R, Order Number 00462931, http://www.defenseimagery.mil, Customer Service (888) 743-4662.
3/ ESAMS training module for fiber optic laser safety, ESAMS Technical Support (865) 693-0048, https://esams.cnic.navy.mil/ESAMS_GEN_2.
4/ MIL-STD-1678-1, Requirements 1302 and 1305.

REQUIREMENT 1306

Source: https://assist.dla.mil -- Downloaded: 2016-12-31T20:53Z
Check the source to verify that this is the current version before use.

TABLE 1306-III. Navy Shipboard Personnel Proficiency Skill Sets.

	Fiber Optic Installer 1/	Fiber Optic Supervisor 2/	Fiber Optic Quality Assurance(QA)2/
Training Module 3/	Initial & Recert 4/	Initial & Recert 4/	Initial & Recert 4/
CORE	X	X	X
Blown Optical Fiber (BOF)	1/	X	X
Cable Handling, Penetration, and Repair/Modification	1/	X	X
FOICB/TRB Forming, Routing, Shaping	1/	X	X
Fiber Optic Termination – Single Terminus (Light Duty)	1/	X	X
Fiber Optic Termination – Multi-Terminus (Heavy Duty)	1/	X	X
Fiber Optic Termination – Fusion Splicing	1/	X	X
Optical Testing	1/	X	X

Notes:
1/ Each individual fiber optic installer shall have an up-to-date certification for the work that they are performing from a certified training organization identified on the Certified Fiber Optic Trainers List (CFOTL). Fiber optic installers require the CORE Module plus one (or more) module(s) based on work being performed.
2/ Each individual fiber optic supervisor and QA personnel shall have an up-to-date certification from a certified training organization identified on the Certified Fiber Optic Trainers List (CFOTL). Supervisors and QA personnel require the CORE Module certification plus CLASSROOM training only (e.g., no hands-on) in the all of the training modules.
3/ The minimum acceptable content for each identified training module is identified in NAVSEA Drawing 8477552. Detailed information and guidance about the Navy Shipboard Fiber Optic Training Program is provided in NAVSEA Drawing 8477552. Requirements for training organizations to be certified shall comply with NAVSEA Drawing 8477552.
4/ Certification Expiration and Recertification Process. All fiber optic installers, supervisors, and QA personnel's certifications shall be valid for three (3) years from the month the applicable area of training was completed. All personnel shall be recertified in the applicable areas of training from an organization identified on the Certified Fiber Optics Training List (CFOTL). Fiber optic installers, supervisors, and QA personnel have the following options to become recertified in the applicable areas of training required for their expertise: Option 1: If the individual fiber optic personnel has performed, supervised, or inspected at least one Navy shipboard fiber optic installation or repair per year for the previous 3 years and the current training certification for the area requiring recertification has not expired, then the individual fiber optic personnel is only required to take an abbreviated refresher training in the area(s) they seek recertification. Written documentation from the individual fiber optic personnel's employer(s) describing the details of the related work (i.e., ship name/hull number, Ship Change Document [SCD] number/Ship Alteration [ShipAlt] number, ship availability date, brief description of work) shall be submitted to the NSWC DD TDA at DLGR_NSWC_FO_ENG@navy.mil two months prior to taking the recertification training. Upon successful completion of the recertification training modules, the individual fiber optic personnel will be recertified for an additional 2 years from the certification expiration date for each of the area(s) they seek recertification. This option is only permitted following a full training module certification.

Option 2: If the individual fiber optic personnel has not met the installation or repair frequency requirements, the related work was determined to be unsatisfactory, the fiber optic training module expiration date has been exceeded, or Option 1 has already been utilized for the previous concurrent recertification, then the individual fiber optic personnel shall take the full training module(s) in the area(s) they seek recertification.

Source: https://assist.dla.mil -- Downloaded: 2016-12-31T20:53Z
Check the source to verify that this is the current version before use.

6.3.1 Aircraft applications. Commercial entities include Government or Contracted Installation/Repair/Training Teams and those contracted within Government organizations such as Fleet Readiness Centers (FRCs) Depot level Maintenance and Repair, Marine Aviation Logistics Squadrons (MALs), Air Force Materiel Commands (AFMCs), Air Force Air Logistics Centers (ALCs), Aircraft Sustainment Wings (ASWs), Combat Sustainment Wings (CSWs), United States Army Aviation and Missile Command (AMCOM), military training centers, and the Aviation and Missile Research, Development, and Engineering Center (AMRDEC).

6.3.2 Navy shipboard applications. Commercial entities include Ship Builders, Industrial Activities, Government/Contracted Installation/Repair Teams, Alteration Installation Teams (AITs), Ship/Planning Yards, On-Site Representative (OSRs) in addition to those contracted within Government organizations such as Supervisor of Shipbuilding (SUPSHIP), Regional Maintenance Centers (RMCs), Field Maintenance Activities (FMAs), and In Service Engineering Agents (ISEAs)."

TABLE 1306-IV. Number of skill sets required selection guide for maintainers.

Function Performed	Minimum Essential Skill Sets
Those working in the locations with fiber optic cabling (i.e., handling)	Awareness
Those disconnecting the fiber optic cabling	Awareness, Basic skill sets
Those performing troubleshooting of fiber optic cabling	Awareness, Basic skill sets, Intermediate skill sets
Those repairing of fiber optic cabling	Awareness, Basic skill sets, Intermediate skill sets, Advance skill sets
Those fabricating new fiber optic cabling	Awareness, Basic skill sets, Intermediate skill sets, Advance skill sets, Craftsman skill sets

Source: https://assist.dla.mil -- Downloaded: 2016-12-31T20:53Z
Check the source to verify that this is the current version before use.

CABLING DOCUMENTATION REQUIREMENTS

(1401-1403)

Source: https://assist.dla.mil -- Downloaded: 2016-12-31T20:53Z
Check the source to verify that this is the current version before use.

FIBER OPTIC CABLING TECHNICAL DOCUMENTATION

1. Purpose. This requirement establishes criteria for demonstrating technical documentation compliance with other requirements covered in part 1 of this Standard Practice. This requirement is intended for developmental, prototype, production, rework, and modification programs on military platform fiber optic cable assemblies.

2. Applicable documents.

2.1 General. The documents listed in this section are specified in sections 3, 4, and 5 of this standard practice. This section does not include documents cited in other sections of this standard practice or recommended for additional information or as examples. While every effort has been made to ensure the completeness of this list, document users are cautioned that they must meet all specified requirements of documents cited in sections 3, 4, and 5 of this standard practice, whether or not they are listed.

2.2 Other Government documents, drawings, and publications. The following other Government documents, drawings, and publications form a part of this standard practice to the extent specified herein. Unless otherwise specified, the issues are these documents are those cited in the solicitation or contract.

NAVAIR 01-1A-505-1/ T.O. 1-1A-14/TM1-1500-323-24-4	Installation and testing Practices Aircraft Fiber Optic Cabling.

(A copy of this document is available online at: https://mynatec.navair.navy.mil. NATEC has three different processes to obtain the manual, depending on if you are Government personnel (military and civilians), Contractors with a Government contract, or everyone else. If unable to access this Web Site or require further assistance, contact (1) NATEC Customer Service: 619.545.1888, (2) NATEC Website Status Hotline: 619.545.1706, or (3) NATEC Customer Service E-mail: nani_customerservice@navy.mil.)

2.3 Order of precedence. Unless otherwise noted herein or in the contract, in the event of a conflict between the text of this document and the references cited herein, the text of this document takes precedence. Nothing in this document, however, supersedes applicable laws and regulations unless a specific exemption has been obtained.

3. Definitions. (Not applicable to this requirement.)

4. General requirement. Data shall be prepared to demonstrate compliance with the requirements covered in part 1 of this Standard Practice. This data shall be in the format as listed in 5 (inspection criteria). Drawings provided shall contain sufficient information to allow a cable to be traced easily. Where practical, fiber optic cabling and electrical cable documentation may be combined. Also, documents shall address the general items listed in 4a through 4e.

a. Cable locations.
b. Cable identification at bulkhead penetrations, and at those clamps or junctions where cables enter or leave the cable harness or convoluted tubing.
c. Bulkhead penetrations, including location and size of each hole.
d. Cable clamping arrangement/design for each cable group where multiple clamps are affixed at one point.
e. Installations not performed in accordance with subordinate work package WP 014 01 of NAVAIR 01-1A-505-4/T.O. 1-1A-14-4/TM 1-1500-323-24-4.

Source: https://assist.dla.mil -- Downloaded: 2016-12-31T20:53Z
Check the source to verify that this is the current version before use.

5. Inspection criteria.

5.1 Isometric fiber optic cabling diagrams. Isometric fiber optic cabling diagrams shall indicate the relative location of inter-compartment fiber optic cable runs between FOCT system components. For simplicity, racks in which no system equipment is installed may be represented by a platform frame centerline. Long fiber optic cable runs may be simplified by eliminating areas where no equipment is installed and by representing eliminated frame spaces with a broken line. The centerline frame space scale for the diagrams shall not be less than 1.6 mm (.062 inch) per foot or less than 1:200. Compartment outlines for spaces containing FOCT system equipment shall approximate the actual contours and shall be shown to indicate relative location within the aircraft. For clarity, compartments containing multiple items of equipment or in which a number of fiber optic cables, cable bundles, or cable harnesses are installed may be depicted as separate enlarged views. A material list shall be provided.

5.2 Cable running sheets. Cable running sheets shall be provided and may be provided in lieu of elementary or isometric cabling diagrams, subject to the following conditions. The cable harness key plan may be provided as a series of two-dimensional plans; however, a comma-delimited ASCII file giving the three dimensional coordinates of each cable harness checkpoint and penetration shall be developed and provided. The coordinate reference for these dimensions shall be consistent with all other platform's drawings. Cable running sheets shall be provided in both hard copy and comma-delimited ASCII file formats, with each cable identified on a unique line in the file, followed by the starting point, the checkpoints associated with that cable, and the ending point.

5.3 Fiber optic cabling block diagrams. Fiber optic cabling block diagrams shall be prepared and shall identify equipment and compartments. The diagrams shall be arranged to indicate relative compartment locations; for example: compartments located on the forward part of the platform shall be shown on the right half of the diagram.

5.4 Fiber optic cable topology optical loss budget analysis report. A fiber optic cable topology optical loss (power) budget analysis report shall be prepared to document the optical power budgets for each system that uses the fiber optic cable topology. The fiber optic cable topology optical power budget analysis report shall be developed in accordance with Requirement 1202.

6. Notes.

6.1 Lessons learned.

6.1.1 Design for maintainability. Ensure system design includes development of technical documentation required to revise and maintain the platform. It is critical for the maintainer to have revisions documented to properly maintain the platform.

6.1.2 Design requirements. Define the Interface Control Document (ICD) early in the acquisition process. Program offices anticipating the use of optical fiber should require that the system integrators/prime contractor should develop the ICD (preferably before initial capability demonstration or earlier) and deliver it to the designated government engineering authority as part of the acquisition process. It is in the ICD where the details that allow proper interoperability are defined such as end face geometry on all attachments to the cable plant. Selection of interface devices must be from approved, reputable sources, preferably military specification or MIL-PRF compatible, so as to ensure long operability in diverse/extreme environments. Failure to do so can result in the inability to connect the various systems during integration as well as low reliability, high obsolescence risk resulting in high life cycle costs.

6.2 Intended use. On these platforms, the fiber optic cable assemblies intended to be inspected include (1) cable harnesses, (2) equipment (electronic module/package) such as an ATC, LRC, LRM, LRU or WRA with internal fiber optics, (3) circuit card modules and assemblies with internal fiber optics, and (4) other miscellaneous cabling.

REQUIREMENT 1401

Source: https://assist.dla.mil -- Downloaded: 2016-12-31T20:53Z
Check the source to verify that this is the current version before use.

FIBER OPTIC CABLING MANAGEMENT DOCUMENTATION

1. Purpose. This requirement establishes criteria for demonstrating management documentation compliance with other requirements covered in part 1 of this Standard Practice. This requirement is intended for developmental, prototype, production, rework, and modification programs on military platform fiber optic cable assemblies.

2. Applicable documents.

2.1 General. The documents listed in this section are specified in sections 3, 4, and 5 of this standard practice. This section does not include documents cited in other sections of this standard practice or recommended for additional information or as examples. While every effort has been made to ensure the completeness of this list, document users are cautioned that they must meet all specified requirements of documents cited in sections 3, 4, and 5 of this standard practice, whether or not they are listed.

2.2 Other Government documents, drawings, and publications. The following other Government documents, drawings, and publications form a part of this standard practice to the extent specified herein. Unless otherwise specified, the issues are these documents are those cited in the solicitation or contract.

NAVAIR 01-1A-505-1/ T.O. 1-1A-14/TM1-1500-323-24-4	Installation and Testing Practices Aircraft Fiber Optic Cabling.

(A copy of this document is available online at: https://mynatec.navair.navy.mil. NATEC has three different processes to obtain the manual, depending on if you are Government personnel (military and civilians), Contractors with a Government contract, or everyone else. If unable to access this Web Site or require further assistance, contact (1) NATEC Customer Service: 619.545.1888, (2) NATEC Website Status Hotline: 619.545.1706, or (3) NATEC Customer Service E-mail: nani_customerservice@navy.mil.)

2.3 Order of precedence. Unless otherwise noted herein or in the contract, in the event of a conflict between the text of this document and the references cited herein, the text of this document takes precedence. Nothing in this document, however, supersedes applicable laws and regulations unless a specific exemption has been obtained.

3. Definitions.

3.1 Maintenance spare fiber. This fiber is not allocated for use by any system, but is reserved for use in the case of damage to an allocated fiber.

4. General requirement. A Fiber Optic Cable Topology (FOCT) management system shall be provided for configuration management of the fiber optic topology. The fiber optic cable topology management system shall provide an automated configuration management capability for use by maintenance personnel. This software application shall be a stand-alone passive system. The human-machine interface shall be a Graphical User Interface (GUI). Terminology, symbols, and labeling shall be consistent with work package WP 003 of NAVAIR 01-1A-505-4/T.O. 1-1A-14-4/TM 1-1500-323-24-4.

5. Specific requirements.

5.1 Optical paths. The fiber optic topology management system shall be capable of providing end-to-end graphical representation of optical fiber paths within the fiber optic topology. Textual information associated and displayed for each end-to-end path shall include as a minimum: Individual fiber, cable, junction connection, and connector identification, circuit identification, installed optical loss data, and end user equipment identification.

5.2 Connection junctions. The fiber optic topology management system shall provide schematic representation of each connection junction associated with the fiber optic topology. This schematic representation shall contain the same information as the “as-built” drawings. Information in the fiber optic topology management system shall be capable of being updated as the configuration of the fiber optic topology is changed.

Source: https://assist.dla.mil -- Downloaded: 2016-12-31T20:53Z
Check the source to verify that this is the current version before use.

5.3 Reconfiguration, sparing and growth. The fiber optic topology management system shall be capable of identification and reporting of reconfiguration options, available spares (including maintenance spare fiber, if applicable) and growth resources. The information contained within the fiber optic topology management system shall use the same database structure and format as the network management system in order to establish a comprehensive network management and damage control situational awareness.

6. Notes.

6.1 Lessons learned.

6.1.1 Design for maintainability. Begin development of the fiber optic maintenance plan early in the process and add greater detail as the design is finalized. Ensure system design includes development of management documentation required to revise and maintain the platform.

6.2 Intended use. On these platforms, the fiber optic cable assemblies intended to be inspected include (1) aircraft cable harnesses, (2) equipment (electronic module/package) such as an ATC, LRC, LRM, LRU or WRA with internal fiber optics, (3) circuit card modules and assemblies with internal fiber optics, and (4) other miscellaneous cabling.

REQUIREMENT 1402

Source: https://assist.dla.mil -- Downloaded: 2016-12-31T20:53Z
Check the source to verify that this is the current version before use.

FIBER OPTIC CABLE HARNESS DRAWINGS

1. Purpose. This requirement establishes content and format criteria for demonstrating cable harness compliance with other requirements covered in Part 1 of this Standard Practice. This requirement is intended for developmental, prototype, production, rework and modification programs on military platform fiber optic cable assemblies.

2. Applicable documents.

2.1 General. The documents listed in this section are specified in sections 3, 4, and 5 of this standard practice. This section does not include documents cited in other sections of this standard practice or recommended for additional information or as examples. While every effort has been made to ensure the completeness of this list, document users are cautioned that they must meet all specified requirements of documents cited in sections 3, 4, and 5 of this standard practice, whether or not they are listed.

2.2 Government documents.

2.2.1 Specifications, standards, and handbooks. The following specifications, standards, and handbooks form a part of this document to the extent specified herein. Unless otherwise specified, the issues of these documents are those cited in the solicitation or contract.

DEPARTMENT OF DEFENSE STANDARD

MIL-STD-790	-	Established Reliability and High Reliability Qualified Products List (QPL) Systems For Electrical, Electronic, and Fiber Optic Parts Specifications.

(A copy of this document is available online at http://quicksearch.dla.mil or from the Standardization Document Order Desk, 700 Robbins Avenue, Building 4D, Philadelphia, PA 19111-5094.)

2.3 Other Government documents, drawings, and publications. The following other Government documents, drawings, and publications form a part of this standard practice to the extent specified herein. Unless otherwise specified, the issues are these documents are those cited in the solicitation or contract.

NAVAIR 01-1A-505-1/T.O. 1-1A-14/TM1-1500-323-24-4	Installation and Testing Practices Aircraft Fiber Optic Cabling.

(A copy of this document is available online at: https://mynatec.navair.navy.mil. NATEC has three different processes to obtain the manual, depending on if you are Government personnel (military and civilians), Contractors with a Government contract, or everyone else. If unable to access this Web Site or require further assistance, contact (1) NATEC Customer Service: 619.545.1888, (2) NATEC Website Status Hotline: 619.545.1706, or (3) NATEC Customer Service E-mail: nani_customerservice@navy.mil.)

2.4 Non-Government publications. The following documents form a part of this document to the extent specified herein. Unless otherwise specified, the issues of these documents are those cited in the solicitation or contract.

AMERICAN NATIONAL STANDARDS INSTITUTE

ANSI Y14.1	-	Drawing Sheet Size and Format.
ANSI Y14.5	-	Dimensioning and Tolerancing.

(Copies of these documents are available on-line at www.ansi.org or from the ANSI Customer Service Department, 25 W. 43rd Street, 4th Floor, New York, NY 10036.)

Source: https://assist.dla.mil -- Downloaded: 2016-12-31T20:53Z
Check the source to verify that this is the current version before use.

2.5 Order of precedence. Unless otherwise noted herein or in the contract, in the event of a conflict between the text of this document and the references cited herein, the text of this document takes precedence. Nothing in this document, however, supersedes applicable laws and regulations unless a specific exemption has been obtained.

3. Definitions.

3.1 Fiber optic cable harness. A cable assembly that consists of fiber optic cabling with or without cables run to different breakouts (branches) and with fiber optic connectors at the end of each cable run or segment. The cabling may contain a protective cover (protected cable harness) or remain exposed (open cable harness). Types of protective coverings include convoluted tubing (preferred for a fiber optic application) and braid. The connector is usually a multiple termini connector plug/receptacle configured with connector accessories such as a back shell for cable strain relief, a back shell for affixing the protective covering to the connector, or an EMI retention nut. The type protective covering used must not be one that stresses the cable.

4. General content. A cable harness drawing shall be developed for each specific configuration of the fiber optic cable harness. It shall include all ranges, sizes, connections and other variations listed. The cable harness drawing shall include the following minimum information and shall be developed to address the general items listed in 4.1 through 4.5. The drawing shall be tailored such that those portions of items listed in 4.1 through 4.5 which are not relevant to the specific fiber optic cable harness being acquired/developed shall not be addressed.

4.1 Cable descriptive data.

a. Part Identification Number (PIN) for the fiber optic cable harness. The numbering system shall include, but may not be restricted to, the classification variables.

b. Part identification number for replacement parts.

c. Size and other data for proper selection.

d. Inspection and test approval data listing the inspections performed and test methods used.

e. Statement that the fiber optic cable harness is in accordance with the requirements of the applicable specification or acquisition document and to referenced specifications.

f. Exceptions to the specification or acquisition document shall be noted.

4.2 Parts list.

a. Item number (corresponding to flag number identifying the part on the drawing).

b. Quantity of each part required per assembly.

c. Name of part with sufficient information to readily identify the part (for example, screws: thread size, length and type of head). Also cite the specification, if applicable.

d. Material of part. Also cite the material, if applicable.

NOTE: When substitution of a material specification is made, it is the responsibility of the vendor to provide written documentation to substantiate that the substituted material is equivalent to the specified material.

e. Type, class, grade, size, military designation, or other classification of any referenced specification.

f. Name of actual manufacturer of each part (when applicable).

g. PIN assigned by manufacturer or part supplier.

REQUIREMENT 1403

Source: https://assist.dla.mil -- Downloaded: 2016-12-31T20:53Z
Check the source to verify that this is the current version before use.

h. PIN assigned by assembly supplier (if different).

i. Remarks column. Items listed such as finishes, plating, or coating along with the applicable specification or other requirements.

4.3 Details of assembly.

a. Two or more representative assembly views, as required, to show clearly the details of the design and fabrication or assembly of the fiber optic cable harness with each part identified.

b. Sectional views, detail views, or notes as necessary to show internal details.

c. Dimensions of the fiber optic cable harness showing overall and principle dimensions in sufficient detail to establish space requirements in all directions necessary for installation and servicing.

d. Dimensions to show required distances between specific parts.

e. Dimensions to ensure interoperability (proper fit) with mating systems.

f. Dimensions and tolerances shall be in accordance with ANSI Y14.5.

g. Details such as entrance provisions, glands (grommets, gaskets, seals), fastening techniques, and other details as applicable.

h. Any special features.

i. Complete weight.

j. Location, size, and type of connectors used.

k. Conformance of cabling components used. Fiber optic cabling components used on the cable harness shall conform to Requirement 1102 for those components listed.

4.4 Special requirements. These requirements may include, but are not limited to, those specified in 4.4a through 4.4h.

a. Requirements to package (bag) and label (tag) the fiber optic cable harness.

b. Requirements to place and apply materials such as heat shrink, boots (or other type strain relief), seals and compounds.

c. Requirements to provide dust covers (metal protective caps) and other means to ensure ferrule end face cleanliness and physical protection. Included is to be one requirement to provide a means to permanently affix dust covers to the cable harness.

d. Requirements to stipulate the optical performance parameters with performance limits at the wavelength(s) of interest.

e. Requirements to place and label cable sleeves with designators specified on the connection diagram.

f. Requirements for special fabrication instructions such as deviation of a ferrule end face polish from that to give a domed ferrule with a PC polish.

REQUIREMENT 1403

Source: https://assist.dla.mil -- Downloaded: 2016-12-31T20:53Z
Check the source to verify that this is the current version before use.

g. Requirements to show a schematic representation of the cable harness with each pin/socket (equivalent to electrical junction/plug) termination connection labeled.

h. Requirements for specific orientations or directions in which a part must be positioned.

4.5 Table for special tools. Special tools required for the fabrication or assembly of the fiber optic cable harness shall be presented in the following tabular form:

a. Tool name (description) including generic name.

b. Tool specification (if applicable).

c. Tool supplier.

d. Tool PIN assigned by tool supplier.

e. Description of tool's application.

f. Remarks column. Special techniques or other usage requirements shall be explained in this column.

4.6 Inspection and test.

4.6.1 Inspection. Identification of quality control documents which show conformance with MIL-STD-790 or the quality control specification that is listed in the applicable specification or procurement document. The acceptance letter shall be referenced, if applicable.

4.6.2 Optical measurements test. Optical measurements (optical loss, and, if applicable, return loss) performed in accordance with requirement 1301 or applicable work package in NAVAIR 01-1A-505-4/T.O. 1-1A-14-4/TM 1-1500-323-24-4.

4.6.3 End face geometry. Inspection performed to ensure connector/terminus ferrule end face geometry is in accordance with Requirement 1302.

4.6.4 Labeling. Inspection performed to ensure fiber optic cable harness is labeled in accordance with Requirement 1104.

4.6.5 Cabling components. Inspection performed to ensure fiber optic cable harness components used conform to those specified in Requirement 1102.

4.6.6 Fabrication integrity. When specified, test performed to verify adequate seal integrity, pull strength, and performance parameter.

4.6.7 Data package. Test report number and date, facility where the test was conducted, data sheets, and other test documentation shall be included in a data package supplied with the finished cable harness.

5. Format.

5.1 Title block. The title block shall be included on each drawing sheet and shall include the title, drawing number, revision letter, sheet number, tolerance on dimensions, vendor acceptance block, CAGE Code, scale, reference drawings, vendor (manufacturer or fabricator) name and address, and drawing size.

5.1.1 Title. The title shall consist of the name by which the fiber optic cable harness is known.

5.1.2 Drawing number. The drawing number shall consist of alphanumeric characters which may be separated by dashes or slashes. The total number of characters in the drawing number (including dashes and/or slashes) shall not exceed 15. Blank spaces are not permitted within the drawing number.

REQUIREMENT 1403

Source: https://assist.dla.mil -- Downloaded: 2016-12-31T20:53Z
Check the source to verify that this is the current version before use.

5.1.3 Revision letter. The revision letter shall denote the latest approved version of the drawing. The revision letter of the drawing shall not be changed until the changes under that revision have been accepted in writing by the authorized Government activity. No change made to the drawing shall be considered a revision until after the initial version of the drawing has been accepted in writing by the authorized government activity. After initial submittal of the drawing, no changes shall be made during the initial drawing review process unless the change is either requested by the authorized Government activity or the change is documented in written correspondence by the vendor.

5.1.4 Sheet number. The sheet number shall be in the format of “Sheet X of Y”.

5.1.5 Tolerance on dimensions. Tolerance shall be listed for fractions, decimals and angles with the units of measure for those dimensions listed on the drawing.

5.1.6 Vendor acceptance block. Appropriate signatures of personnel that prepared, designed or engineered, and approved the drawing with the dates.

5.1.7 CAGE code. Commercial and Government Entity (CAGE) Code for the vendor shall be listed.

5.2 Revision block. A revision block shall be included on each sheet of the drawing and shall contain the revision letter, description of the revision, acceptance letter with serial number and originator identification, and acceptance date.

5.3 Form. Sheet size and format not specified herein shall be in accordance with ANSI Y14.1.

5.4 Classification designation. No Government security classification designation, such as confidential or secret, shall appear on the drawing unless a particular classification is specified by the Government.

6. Notes.

6.1 Lessons learned.

6.1.1 Drawing content. Sufficient drawing content ensures adequate configuration description and delivery of required performance. Drawings with sufficient content and specifying required inspection and test (optical measurement) criteria are one means to ensure a fiber optic cable harness with specified components, proper configuration, and adequate optical performance is obtained.

6.2 Intended use. On these platforms, the fiber optic cable assemblies intended to be inspected are cable harnesses, (1) equipment (electronic module/package) such as an ATC, LRC, LRM, LRU or WRA with internal fiber optics, (2) circuit card modules and assemblies with internal fiber optics, and (3) other miscellaneous cabling.

REQUIREMENT 1403

Source: https://assist.dla.mil -- Downloaded: 2016-12-31T20:53Z
Check the source to verify that this is the current version before use.

REQUIREMENTS, SUPPORT MATERIAL

(1501-1502)

Source: https://assist.dla.mil -- Downloaded: 2016-12-31T20:53Z
Check the source to verify that this is the current version before use.

LESSONS LEARNED

1. Purpose. This support material supplements the requirements in this Standard Practice by tabulating the lessons learned through which the requirements were developed. These lessons learned are applicable for developmental, prototype, production, rework, and modification programs on military platform fiber optic cable assemblies.

2. Applicable documents.

2.1 General. The documents listed in this section are specified in sections 3, 4, and 5 of this standard practice. This section does not include documents cited in other sections of this standard practice or recommended for additional information or as examples. While every effort has been made to ensure the completeness of this list, document users are cautioned that they must meet all specified requirements of documents cited in sections 3, 4, and 5 of this standard practice, whether or not they are listed.

2.2 Other Government documents, drawings, and publications. The following other Government documents, drawings, and publications form a part of this standard practice to the extent specified herein. Unless otherwise specified, the issues are these documents are those cited in the solicitation or contract.

NAVAIR 01-1A-505-4/ T.O. 1-1A-14-4/TM1-1500-323-24-4	Installation and Testing Practices Aircraft Fiber Optic Cabling.

(A copy of this document is available online at: https://mynatec.navair.navy.mil. NATEC has three different processes to obtain the manual, depending on if you are Government personnel (military and civilians), Contractors with a Government contract, or everyone else. If unable to access this Web Site or require further assistance, contact (1) NATEC Customer Service: 619.545.1888, (2) NATEC Website Status Hotline: 619.545.1706, or (3) NATEC Customer Service E-mail: nani_customerservice@navy.mil.)

2.3 Order of precedence. Unless otherwise noted herein or in the contract, in the event of a conflict between the text of this document and the references cited herein, the text of this document takes precedence. Nothing in this document, however, supersedes applicable laws and regulations unless a specific exemption has been obtained.

3. Definitions.

3.1 Lessons learned. Understanding, knowledge, and skills obtained or acquired through the experience of performing a desired or required action.

4. Support material. Lessons learned by various platforms and shared at meetings of the Joint Fiber Optic Working Group (JFOWG) to date have been categorized and tabulated , requirements have been developed, and these requirements have been placed in Part 1 of this Standard Practice. Tables 1510-I to 1501-XIII are the tabulation of these requirements.

Source: https://assist.dla.mil -- Downloaded: 2016-12-31T20:53Z
Check the source to verify that this is the current version before use.

TABLE 1501-I. Cabling specific practices, layout, and placement.

Item	Lesson learned	Priority
A. Cleaning		
1-A1	Cleaning is paramount. Current military maintainer experience has been that about 80 percent of fiber optic maintenance actions are traced back to cleaning at fiber optic connection interfaces. Use of an inspect-clean-inspect process (such as the one found in the General Series Maintenance Manual) ensures proper operation once maintenance action is complete.	1-3 (clean)
1-A2	Use dummy stowage receptacles. Install dummy stowage receptacles for securing connector plug end of cabling adjacent to equipment. This avoids contamination, which might be difficult to clean during storage.	1-4 (clean)
1-A3	Minimize open connector contamination. Use dust covers and dummy connector receptacles as the means to minimize termini contamination when a multiple termini connector is unmated.	1-5 (clean)
1-A4	Segregate termini and contacts. Segregation of fiber optic termini from electrical contacts reduces cleaning issues and minimize occurrence of applying electrical connector preservatives to connectors with fiber optic termini.	1-6 (clean)
1-A5	*Verification for requirement to clean. Cleaning of ferrule end faces on connector termini make a substantial difference as verified by mating durability testing. Regular mating and de-mating of connectors causes end face contamination. Contamination that occurs in a clean environment is primarily internal to the connector. Internal contamination includes the "residue" resulting from connector wear (friction). Findings are that pitting and other permanent defects result from not cleaning after each mating. This contamination can lead to fiber cracks and fractures that require terminus replacement.*	
B. Selection		
1-B1	Preferred construction of cable harness or protection for cable runs. Wherever practical, use convoluted tubing as the means to protect the fiber optic cables and cable bundles in both a protected cable harness configuration and for cabling runs within an open cable harness. Use clear or semi-transparent convoluted tubing if possible to allow inspection of the fiber optic cable. Use convoluted tubing made from FEP (fluorinated ethylene propylene) for general use. Use convoluted tubing made from PEEK (polyether-ether-ketone) for intra cabin applications requiring low smoke and zero halogen fire emissions.	2-1 (break/repair)
1-B2	Use proven components and construction (see TABLE 1501-II). Use of untried, developmental components has repeatedly shown failure mechanisms and problems already addressed in the preferred components listed in table 1501-II.	2-2 (standardize)
1-B3	Drainage holes in convoluted tubing. Placement of drainage holes in convoluted tubing after installation of fiber optic cable bundles results in significant fiber breakage. If drainage holes are required, pre-perforated convoluted tubing is preferred.	5-4 (break)

Source: https://assist.dla.mil -- Downloaded: 2016-12-31T20:53Z
Check the source to verify that this is the current version before use.

TABLE 1501-I. Cabling specific practices, layout, and placement - Continued.

C. Layout		
1-C1	Constraints on redundancy. Redundant paths of fiber optic cabling must be routed in separate cable harnesses versus in the same fiber optic cable bundle. Doing so reduces the risk of signal loss when cause of fiber breakage may extend to multiple fibers in the same bundle or routing path.	1-2 (system survivability)
1-C2	Minimize opening fiber optic connectors during maintenance actions. Design system to minimize removal of equipment that requires mating and de-mating of fiber optic connectors (such as design system to minimize fiber optic connector mating and de-mating).	3-1 (break)
1-C3	Use maintenance breaks near network equipment. Use of maintenance breaks near network equipment (including electronics modules/packages such as avionics boxes) and end user equipment allows remove and replace subassemblies at locations likely to see high maintenance and corresponding high likelihood of maintenance induced failures. Making these maintenance breaks a common length minimizes the number of replacement configurations that need to be logistically supported.	3-2 (break)
D. Placement		
1-D1	Minimize slack in cabling. Reduced cable slack discourages fiber optic cabling from being used as hangers, hand-holds, and other practices detrimental to optical fiber survivability in addition to minimizing chances of fiber breakage/fatigue caused by operational environmental and mechanical stresses.	4-1 (break)
1-D2	Support cabling in areas requiring movement. Applications requiring movement (such as shifting or sliding) in the fiber optic cabling must have the cabling mounted to a movable support versus allowing a length of unsupported cabling. Equipment mounts requiring sliding or shifting of fiber optic cabling for installation or maintenance are not preferred and should be minimized.	4-2 (break)
1-D3	Segregate optical fiber from electrical conductors. Mixing, of electrical conductors (metallic conductors or wire) with optical fibers in the same cable bundle or cable harness, does not allow for easy identification, maintenance, and handling of the fiber optic cables. This lack of identification results in increased breakage of the fiber optic cables during initial installation and maintenance.	4-3 (break)
1-D4	Use a remove and replace repair strategy for optical fiber. The preferred repair method is to use a remove and replace repair strategy rather than repair in situ (such as with a splice). When a splice is used, the portion of the cable after the break is removed (including its end terminus) and replaced with a prefabricated terminus pigtail. This avoids termination (application of a terminus including curing and polishing) on the aircraft. Fiber breaks occur almost always within 12 inches from the connector. Prioritizing of repair strategies are as follows: (1) remove and replace of short segments (such as maintenance breaks), (2) remove and replace fiber within convoluted tubing, (3) perform splicing.	4-4 (repair/break)

See notes at end of table.

Source: https://assist.dla.mil -- Downloaded: 2016-12-31T20:53Z
Check the source to verify that this is the current version before use.

TABLE 1501-I. Cabling specific practices, layout, and placement - Continued.

E. Personnel considerations		
1-E1	Follow laser safety and fiber optic handling instruction. Installation/maintenance personnel training must include laser safety and fiber optic handling to mitigate risks of eye and skin damage.	1-1 (safety)
1-E2	Follow the common maintenance procedures. Follow the common fiber optic maintenance procedures such as in the General Series Maintenance Manual, NAVAIR 01-1A-505-4/T.O. 1-1A-14-4/TM 1-1500-323-24-4. System design consideration shall be based on these or equivalent procedures	5-1 (standardize)
1-E3	Personnel information overload. Standardization can minimize the logistics footprint and reduce the strain on the maintainer by minimizing the total number of variations which a maintainer has to remember as well as execute with proficiency potentially over long periods of disuse. Standardization can extend to installation and maintenance practices and the parameters they use (such as cable bend diameter). Stated succinctly - use the KISS principle (Keep It Simple and Segmented).	5-2 (standardize)
1-E4	Personnel proficiency. Time to repair a failure is greatly reduced by providing a remove and replace maintenance strategy that quickly identifies the replaceable unit (such as fiber segment) eliminating the need for complicated troubleshooting or in situ repair.	5-3 (standardize)

1/ Cleaning priority (clean) = preventing fiber end face cracking/breakage and contamination.
2/ Break = preventing fiber breakage in cabling along cable length.

TABLE 1501-II. Fiber optic cabling components.

Item	Lesson learned	Priority
2-1	Use proven components. Use fiber optic components specified in MIL-STD-1678-6. This avoids having to relearn past experiences which have been addressed and resulted in the current recommended components.	1
2-2	Secure cabling at rear of connectors. Use back shells as the means to secure cabling at the back of the connector.	2
2-3	Preferred construction of cable harness or protection for cable runs. Use convoluted tubing as the means to protect the fiber optic cables and cable bundles in both a protected cable harness configuration and for cabling runs within an open cable harness. Use clear or semi-transparent convoluted tubing. Use convoluted tubing made from FEP (fluorinated ethylene propylene) for general use. Use convoluted tubing made from PEEK (polyether-ether-ketone) for intra cabin applications requiring low smoke and zero halogen fire emissions.	3

REQUIREMENT 1501

Source: https://assist.dla.mil -- Downloaded: 2016-12-31T20:53Z
Check the source to verify that this is the current version before use.

TABLE 1501-III. Fiber optic cable repair.

Item	Lesson learned	Priority
3-1	Preferred repair method. Use a remove and replace repair strategy for fiber optic cable segments where practical. This minimized total ownership costs by avoiding having to include craft unfriendly practices which require a high degree of experience to learn and maintain proficiency (for example, termination).	1
3-2	Splice selection. Information on the splice selection is in subordinate Work Package WP 013 01 of NAVAIR 01-1A-505-4/T.O. 1-1A-14-4/TM 1-1500-323-24-4.	2
3-3	Number of splices. A maximum of two splices should be allowed per segment, one at each end. Ensure the loss budget includes the allowance to accommodate the maximum number of splices specified per segment.	
3-4	Location of splicing. Splicing should be allowed only within 457 mm (18 inches) or less from the connector. *Splicing is the preferred repair method at this location. Provision of a 457 mm (18 inch) pre-terminated pigtail is recommended.*	
3-5	Do not accept a new aircraft with splice(s). Acceptance of the aircraft from the prime contractor with any splices in the fiber optic cabling is not preferred. Splicing in newly received fiber optic cabling is considered to be a defect. Splicing should be incorporated as a method of field repair if required (when a remove and replace repair strategy was not practical).	
3-6	*Situation to prioritize use of splice repair strategy. If replacing segment requires multiple panel removals, then getting the aircraft operational in specified timeframe dictates default to a splice repair strategy.*	

TABLE 1501-IV. Fiber optic cabling labeling.

Item	Lesson learned	Priority
4-1	Use cable harness identification. Use of common labeling to identify fiber optic cable harnesses within the platform and among different platforms. Use of common labeling minimizes breaks in fiber due to personnel being unaware of handling fiber optic cable.	1
4-2	Label fiber optic capable equipment (such as Electronics Module/Package) identification. Use common labeling to identify fiber optic connector ports on equipment, such as a WRA, for compliance with both this labeling and laser safety requirements. This ensures that when a connector on a fiber capable box is opened, the proper cleaning process is enforced.	2

TABLE 1505-V. Built-In-Test (BIT).

Item	Lesson learned	Priority
5-1	Utilize BIT to reduce ambiguity zones. BIT is required to break the ambiguity zones from three to one. This allows maintainers to determine which is failing, the transmitting box, receiving box, or cable plant, and affect the appropriate repair.	1

Source: https://assist.dla.mil -- Downloaded: 2016-12-31T20:53Z
Check the source to verify that this is the current version before use.

TABLE 1501-VI. Loss budget calculations.

Item	Lesson learned	Priority
6-1	Calculation models. The only two models to calculate the loss budget shall be the statistical model with 3σ or greater statistics and the worst case model with a 3 dB value for each margin in the loss budget (such as design and environmental). Typically this "worst case approach" is a bit more conservative than the "statistical approach. The "worst case approach" gives the fiber optic system designer a higher "confidence" that a given cable assembly will work NO MATTER WHAT when compared to the "statistical model". The "statistical model" allows the fiber optic system designer to specify the degree of "confidence" inherent in the system design (such as, 3σ statistics gives a 0.999 confidence level). If good statistical data is not available for all components, "In-between" statistical and worst case approaches are also valid.	1
6-2	Design (unallocated) margin. Design margin must be included in mission essential cable assembly loss budgets. A 3 dB design margin is recommended to account for unexpected losses in mission essential cable assemblies.	2
6-3	Other criteria in loss budget. Active and passive component environmental effects must be included in the link budget calculation. Transmitter and receiver aging factors must be included in the loss budget calculation.	3

TABLE 1501-VII. Optical measurement inspection.

Item	Lesson learned	Priority
7-1	Costly not to inspect. It is very costly to have to remove fiber optic cabling or equipment when degraded optical performance occurs. If deficiencies are not found through initial inspection and testing prior to installation versus finding them after installation, they will have to be replaced resulting in maintenance costs. In addition, if the repair equipment is added without following the proper procedures such as confirming that the connectors are clean, they may damage the cable plant hardware resulting in yet more expensive repair on the in situ cable plant.	1
7-2	Not meeting loss in an operating environment. If initial loss (in benign environment at beginning of life) is not within the specified limits, then there is no guarantee of having the margin to obtain an acceptable loss in an operating environment. Recall that the loss budget calculation includes environmental and mechanical margins (operating environment) based on a value for the initial loss (such as, loss budget = initial + environmental margin + mechanical margin + other margins/ factors).	2
7-3	Use optical performance data. (1) Include optical performance requirements (connector/terminus ferrule end face geometry, optical loss, if specified return loss) when preparing manufacturing and compliance data, (2) Obtain initial optical performance data from cable assembly (harness) fabrication source (house), (3) Ensure cable assembly is packaged properly (including bend diameter, method to secure or retain within packaging, adequate level of protection), (4) Verify optical performance upon receipt at installation site (manufacturing plant or field maintenance activity) and optical loss upon (immediately after) installation into the applicable military mobile vehicle (such as an aircraft).	3

TABLE 1501-VIII. End face geometry inspection.

Item	Lesson learned	Priority
8-1	Costly not to inspect after fabrication. Failure to inspect for end face geometry as part of the post fabrication/assembly inspections can be costly. An incorrect end face geometry can damage the mating end face simply through the compressive forces of the connector (through mechanisms as contamination. entrapment, shear loading, excess fiber height in addition to excess tensile load). Rather than inspect to ensure compliance from the start, it is more costly to have to remove the in situ cabling and equipment when damage occurs after installation due to improper end face geometry.	1
8-2	Subcontractor inspections. Maintain constant vigilance with vendors constructing both cabling (harnesses) and equipment modules (such as a WRA or LRU). In particular, ensure receipt of connector/termini with end faces that are properly polished and meet end face geometry requirements. Unless constant vigilance is maintained, common practice experienced is for the vendor to default back to improper fabrication.	

Source: https://assist.dla.mil -- Downloaded: 2016-12-31T20:53Z
Check the source to verify that this is the current version before use.

TABLE 1501-IX. Fiber optic cabling post installation inspection.

Item	Lesson learned	Priority
9-1	Address maintenance issues. Post installation inspection is critical to identify issues and take action to address. Failure to do so can cause the required maintenance to increase.	1
9-2	Share lessons learned. Post installation inspection is an opportunity for the inspector to share lessons learned with the installer or maintainer. This sharing can avoid repeating the same mistakes.	2
9-3	Enforce commonality. Post installation inspection can determine if common (specified) hardware is used and common procedures are followed. Non-specified hardware may fail to function as originally designed.	3
9-4	Evaluate training. Post installation inspection can determine if training of proper installation and maintenance procedure are being taught and are effective, and if so, understood by installing and maintenance personnel. This inspection can verify prevention of regression to "wiring" mentality.	4
9-5	Verify optical loss upon receipt at installation site and immediately after installation into the applicable military mobile vehicle (such as an aircraft).	5

TABLE 1501-X. Fiber optic cabling conformance inspection.

Item	Lesson learned	Priority
10-1	Restrictions for nonconformity occurrence. Unless directed, inspections are not increased normally when product issues arise. Sampling plan is used to screen for nonconforming product. When a non-conformance is found, a mechanism must be in-place to increase inspection (preferably to 100 percent). Once the cause for the non-conformance is found, then corrective action is implemented, and reliability of the corrective action must be demonstrated before reinstituting continuance of normal inspections (such as sampling plans).	1
10-2	Requirement for zero nonconformance. Inspectors must maintain vigilance to ensure that no non-conformances are allowed. Unless reiterated, inspection criteria are sometimes found to allow limited defects even though no such relaxation is allowed in the military specification or other procurement document. These non-conformances can cause the system not to function as designed.	2

TABLE 1501-XI. Fiber optic cabling technical documentation.

Item	Lesson learned	Priority
11-1	Design for maintainability. Ensure system design includes development of technical documentation required to revise and maintain the platform. It is critical for the maintainer to have revisions documented to properly maintain the aircraft.	1
11-2	Design requirements. Define the Interface Control Document (ICD) early in the procurement process. Program offices anticipating the use of optical fiber should require that the system integrators/prime contractor should develop the ICD (preferably before initial capability demonstration or earlier) and deliver it to the designated government engineering authority as part of the acquisition process. It is in the ICD where the details that allow proper interoperability are defined such as end face geometry on all attachments to the cable plant. Selection of interface devices must be approved, reputable sources, preferably military specifications of MIL-PRF compatible, so as to ensure long operability in diverse/extreme environments. Failure to do so can result in the inability to connect the various systems during integration as well as low reliability, and/or high obsolescence risk resulting in high life cycle costs.	2

REQUIREMENT 1501

Source: https://assist.dla.mil -- Downloaded: 2016-12-31T20:53Z
Check the source to verify that this is the current version before use.

TABLE 1501-XII. Fiber Optic Cabling Management Documentation.

Item	Lesson learned	Priority
12-1	Design for maintainability. Begin development of the fiber optic maintenance plan early in the process and add greater detail as the design is finalized. Ensure system design includes development of management documentation required to revise and maintain the platform.	1

TABLE 1501-XIII. Fiber Optic Cable Harness Drawing.

Item	Lesson learned	Priority
13-1	Design for both adequate configuration and performance. Sufficient drawing content ensures adequate configuration description and delivery of required performance. Drawings with sufficient content and specifying required inspection and test (optical measurement) criteria are one means to ensure a fiber optic cable harness with specified components, proper configuration, and adequate optical performance is obtained.	1

TABLE 1501 – XIV. Fiber Optic Support.

Item	Lessons learned	Priority
14-1	Develop requirements from lessons learned. Implement lessons learned by developing requirements from these lessons and imposing them in applicable standards and acquisition documents. Develop maintainer based processes and procedures from these requirements. This approach leads to more relevant requirements, processes and procedures.	1
14-2	Maintain and update lists of lessons learned and list of distinctions between fiber and wire. Revise and add as new ones are identified.	1
14-3	Ensure adequate skill sets. Ensure that military maintainers, depot artisans, prime and sub prime contractors, and others within the fiber optic community (both Government and commercial) have initial and maintain an adequate skill set for their assigned fiber optic responsibilities.	1
14-4	Maintain competency of perishable skill sets. Implement reoccurring training or otherwise augment as needed to ensure skill set sustainment. Perishable skill sets are those that are lost or degrade rapidly (usually within months) if not practiced or performed.	1

5. Implementation. Lessons learned in which the requirements were developed and these requirements were placed in Part 1 of this Standard Practice are shown in a regular font style. Lessons learned in which the requirements were not yet developed and placed in Part 1 of this Standard Practice are shown in an italic font style.

6. Notes.

6.1 Intended use. On these platforms, lessons learned are intended to occur while performing actions on (1) cable harnesses, (2) electronic equipment modules (such as ATC, LRC, LRM, LRU or WRA with internal fiber optics), (3) circuit card modules and assemblies with internal fiber optics, (4) fiber optic test jumpers, and (5) other miscellaneous cabling.

Source: https://assist.dla.mil -- Downloaded: 2016-12-31T20:53Z
Check the source to verify that this is the current version before use.

INSTALLATION AND MAINTENANCE DISTINCTIONS BETWEEN FIBER AND WIRE

1. Purpose. This support material supplements the requirements in this Standard Practice by listing the distinction between fiber and wire. These distinctions are applicable for developmental, prototype, production, rework, and modification programs on military platform fiber optic cable assemblies.

2. Applicable documents.

2.1 General. The documents listed in this section are specified in sections 3, 4, and 5 of this standard practice. This section does not include documents cited in other sections of this standard practice or recommended for additional information or as examples. While every effort has been made to ensure the completeness of this list, document users are cautioned that they must meet all specified requirements of documents cited in sections 3, 4, and 5 of this standard practice, whether or not they are listed.

2.2 Other Government documents, drawings, and publications. The following other Government documents, drawings, and publications form a part of this standard practice to the extent specified herein. Unless otherwise specified, the issues are these documents are those cited in the solicitation or contract.

NAVAIR 01-1A-505-4/ T.O. 1-1A-14-4/TM1-1500-323-24-4	Installation and Testing Practices Aircraft Fiber Optic Cabling.

(A copy of this document is available online at: https://mynatec.navair.navy.mil. NATEC has three different processes to obtain the manual, depending on if you are Government personnel (military and civilians), Contractors with a Government contract, or everyone else. If unable to access this Web Site or require further assistance, contact (1) NATEC Customer Service: 619.545.1888, (2) NATEC Website Status Hotline: 619.545.1706, or (3) NATEC Customer Service E-mail: nani_customerservice@navy.mil.)

2.3 Order of precedence. Unless otherwise noted herein or in the contract, in the event of a conflict between the text of this document and the references cited herein, the text of this document takes precedence. Nothing in this document, however, supersedes applicable laws and regulations unless a specific exemption has been obtained.

3. Definitions.

3.1 Fiber optic cabling. Fiber optic cabling is a term used to include single fiber cable, multiple fiber cable, fiber optic cable bundles, and fiber optic cable harnesses. The (optical) fiber is the optical conduit or waveguide equivalent to the metallic conductor (wire) in an electrical cable. Cable structure is added to make the fibers easier to handle and maintain. This structure is designed to carry the loading as the fiber is installed or as it is put under tension during its life. The fiber is a thin piece of glass (with a diameter usually around 125 micrometers) approximately the size of a human hair that contains and transports the light signals. Standard cable harnesses are open cable harnesses, closed cable harnesses with convoluted tubing as the protective covering, and closed cable harnessed with cable wrap, braid or other type protective covering.

3.2 Hybrid cables. Cables that contain both optical fibers and metallic electrical conductors.

3.3 Mixed fiber cables. Cables that contain more than one size and/or type of optical fiber.

3.4 Wire. “A usually pliable metallic strand or rod made in many lengths and diameters, sometimes clad and often electrically insulated, used chiefly for structural support or to conduct electricity.” Source: American Heritage Dictionary, College Edition.

Source: https://assist.dla.mil -- Downloaded: 2016-12-31T20:53Z
Check the source to verify that this is the current version before use.

4. Support material. Distinctions voiced by various platforms and shared at meetings of the Joint Fiber Optic Working Group (JFOWG) to date are listed. The principle lesson learned is to prevent regression to a "wiring" mentality. Actions on fiber optic cabling shall be performed using processes developed or tailored for a fiber optic application.

5. Implementation. Distinctions between fiber and wire documented to date are listed are in 5.1 through 5.6.

5.1 Signal transmission: Copper media transports electrical signals in a cylindrical construct similar to glass but in the form of electrons. At high speeds the electrons are carried on the exterior (outside) of the conductor. The signal propagation at low speeds is unaffected by bends whereas at high speeds it may be degraded. Signal transmission through fiber is in the form of light and is predominately contained within the core glass using the process of total internal reflection (TIR) along the central axis within the waveguide. Microbends that violate the minimum bend radius degrade the TIR process and performance of the transmission system. Copper systems are dependent on the flow of mobility electrons or electron holes, whereas fiber is dependent on capture and containment of light.

5.2 Cleaning. Dirty electrical connectors typically will work; dirty fiber optic connectors DO NOT work (block transmission of light resulting in system failure, or at the very least, degrade system performance/transmission speed). Avoidance of contamination on the connector/terminus ferrule end face is paramount. If not cleaned properly, particulate and fluid contamination on the end face of a fiber optic connector/terminus can result. Particulate contamination can result in a shattered fiber. Fluid contamination can result in optical signal degradation that slows or halts network communication traffic.

a. Connector exterior cleaning. Connector shell must be cleaned prior to opening (de-mating). Otherwise, exterior contamination can fall into the interior of the connector increasing the challenges of cleaning.

b. Capping. A fiber optic connector must be capped to minimize particulate and fluid contaminants from entering the connector interior (with potential to later migrate to the ferrule end faces) when the connector is open and/or not in service. Greater leeway is given for type of capping allowed due to increased criticality for cleanliness.

c. Inspecting. Ferrule end faces must be inspected prior to any connector mating to ensure that the end face is clean. At this point, the act of opening a connector can cause contamination thus requiring cleaning. No cleaning method is 100 percent effective. This means inspection is required to confirm that the end face has been adequately cleaned.

d. Cleaning. If contaminants are present on the ferrule end face, an inspect-clean-inspect process must be conducted to remove the contamination.

e. Preservation. CPC or other preservatives are not applied on a connector containing fiber optic termini or ferrules.

5.3 Bend diameter. Bent fibers cause loss of signal resulting in system failure and ultimately breakage requiring repair if the bend diameter is made too small. Placing the fiber optic cabling in a bend that is smaller than the specified bend diameter can lead to a reduction in the signal strength. The system may work fine on the ground but fail in flight. Additionally, it might result in immediate breakage or long term degradation of the fiber. Long term degradation results when tight bends cause stress cracks in the fiber that propagate (increase) over time leading to eventual fiber failure (breakage). Immediate breakage results in loss of signal (system failure).

5.4 Handling. Every aircraft has unique infrastructure to support its operating capabilities; For example, hydraulic and cooling systems use unique copper or steel tubing networks to distribute and exchange fluids within these systems. Bending, securing and inter-connecting installation rules must be used, otherwise the tubing will kink, fittings will leak and system performance will be degraded.

REQUIREMENT 1502

Source: https://assist.dla.mil -- Downloaded: 2016-12-31T20:53Z
Check the source to verify that this is the current version before use.

a. Radar systems use rigid waveguides, which have specific plumbing and pressurization requirements. If these are not respected, system performance degradation and failure will occur. One misconception is that copper and fiber transmission lines have the same mechanical and environmental performance characteristics. This is a bad comparison; copper and fiber are two different constructs. Copper is an element while glass is a chemical compound. Copper is malleable and glass is rigid. Packaging designs (such as cable designs), installation, and maintenance practices for these transmission lines determine the environmental integrity, mechanical flexibility, and information carrying reliability (see table 1502-I).

TABLE 1502-I. Packaging differences based on material constructs.

Packaging	Copper, aluminum	Optical fiber
Coating	Insulation	Primary, secondary, and colorant (125 μm)
Extruded over sheath	Shielding	Tight buffer or loose tube
Termination	Mechanical and soldering	Arc fusion, mechanical, epoxy adhesion
Tensile load support	Carried by metallic conductor	Carried by strength member of cable (such as braid)

b. Installers and maintainers should not be afraid of handling fiber optic cables, but must respect installation guidelines (such as being more diligent in its handling). Fiber optic cable can be bent and handled, but more care must be taken to ensure its minimum bend diameter is not exceeded and the fiber is not micro neither bent nor pulled beyond its allowable stress. Fiber optic waveguides will operate fine if handled according to the properly defined procedures such as those in the General Series Maintenance Manual (NAVAIR 01-1A-505-4/T.O. 1-1A-14-4/TM 1-1500-323-24-4).

5.5 Installation cable pulls. Optical fiber cables must be pulled by hand (and preferably monitored during the pull with a force gauge). The maximum pull force should not be exceeded. When the specified value for the pull strength is exceeded, immediate breakage or long term degradation of the fiber can result. Ideally, the cable should be left unstressed once installed or at least leaving a residual stress well below its maximum (less than a fifth of the maximum stress).

5.6 Install and replace (with and without convoluted tubing).

a. Without convoluted tubing. Fiber optic cable must be clamped or secured with lacing taped only to the extent that cabling is “snug”, but the cable jacket is not deformed (verified when a “light” side-to-side force is applied and no movement is observed).

b. With convoluted tubing.

5.7 Repair. Joint services have prepared a document which is dedicated to the state of the art repair practices, which captures common platform maintenance and repair plan procedures. These can be found in the General Series Maintenance Manual for Fiber Optic Cabling (NAVAIR 01-1A-505-4/T.O. 1-1A-14-4/TM 1-1500-323-24-4).

6. Notes.

6.1 Intended use. On these platforms, lessons learned are intended to occur while performing actions on (1) cable harnesses, (2) electronic equipment modules (such as ATC, LRC, LRM, LRU or WRA with internal fiber optics), (3) circuit card modules and assemblies with internal fiber optics, (4) fiber optic test jumpers, and (5) other miscellaneous cabling.

Source: https://assist.dla.mil -- Downloaded: 2016-12-31T20:53Z
Check the source to verify that this is the current version before use.

Custodians
Army - CR
Navy - AS
Air Force - 85
DLA - CC

Review activity:
Air Force – 20, 99

Preparing activity:
DLA - CC

(Project 60GP-2016-001)

NOTE: The activities listed above were interested in this document as of the date of this document. Since organizations and responsibilities can change, you should verify the currency of the information above using the ASSIST Online database at https://assist.dla.mil/.

Source: https://assist.dla.mil -- Downloaded: 2016-12-31T20:53Z
Check the source to verify that this is the current version before use.