INCH-POUND

MIL-C-28876/6D
9 JULY 1992
SUPERSEDING
MIL-C-28876/6C
15 June 1988

MILITARY SPECIFICATION SHEET

CONNECTORS, FIBER OPTIC, CIRCULAR, PLUG STYLE, MULTIPLE REMOVABLE TERMINI, SCREW THREADS, WITHOUT STRAIN RELIEF, ENVIRONMENT RESISTING

This specification is approved for use by all Departments and Agencies of the Department of Defense.

The requirements for acquiring the product described herein shall consist of this specification sheet and the issue of the following specification listed in that issue of the Department of Defense Index of Specifications and Standards (DODISS) specified in the solicitation: MIL-C-28876.

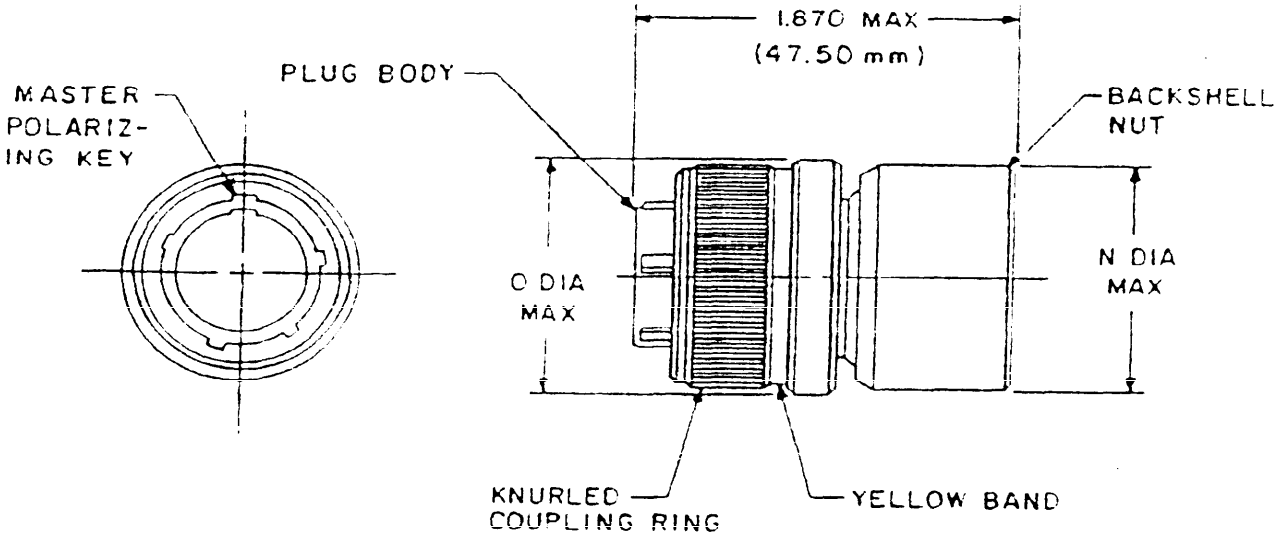

FIGURE 1. Plug connector.

DISTRIBUTION STATEMENT A. Approved for public release; distribution is unlimited.

Source: https://assist.dla.mil -- Downloaded: 2016-12-10T01:59Z
Check the source to verify that this is the current version before use.

Shell size	N dia max	D dia max	Insert figure See note 5	Color band EIA RS359
11	.960 (24.38)	1.028 (26.11)	1	Yellow
13	1.085 (27.55)	1.141 (28.98)	2	Yellow
15	1.255 (31.88)	1.263 (32.08)	3	Yellow
23	1.703 (43.25)	1.703 (43.25)	4	Yellow

NOTES:
1. Dimensions are in inches.
2. Metric equivalents are given for general information only.
3. Dimensions apply after plating.
4. Metric equivalents (mm) are in parentheses.
5. For insert arrangement, see the indicated figure in MIL-STD-2163.

FIGURE 1. Plug connector - Continued.

REQUIREMENTS:

Temperature: Range 1 (-54°C to +65°C operating, -62°C to +71°C storage).

Dimensions and configurations: See figure 1 herein and MIL-C-28876, figures 4 and 9.

Weight:

Shell size	Weight (ounces), maximum
11	2.0
13	2.5
15	3.0
23	4.3

Fiber optic cable:

Cable diameter: .118 inch (3.00 mm) maximum.

Fiber type: MIL-F-49291/3, MIL-F-49291/4, MIL-F-49291/6, and MIL-F-49291/7.

Insert arrangement: See MIL-STD-2163 for desired shell size.

Termini: Style P (pin) or S (socket). See MIL-T-29504/1, MIL-T-29504/2, MIL-T-29504/12, MIL-T-29504/13, MIL-T-29504/14, and MIL-T-29504/15 (for dummy terminus, see MIL-T-29504/3).

Backshell nut: See figure 1. Backshell nut shall be supplied with connector unless otherwise specified in the PIN.

Source: https://assist.dla.mil -- Downloaded: 2016-12-10T01:59Z
Check the source to verify that this is the current version before use.

Cleaning procedures: Dampen lens tissue (paper wipe or cotton swab) with a small amount of isopropyl alcohol (minimum 90 percent strength). Gently wipe the face of the connector, removing any debris, particularly around the optical fiber, using clean lint-free lens tissue (paper wipe or cotton swab). Carefully dry the contact with a clean, dry, lint-free tissue.

Shell polarization: 1 through 6 keyway positions. See MIL-C-28876, figure 6.

Marking:

PIN: Marked on coupling ring of plug (see table I).

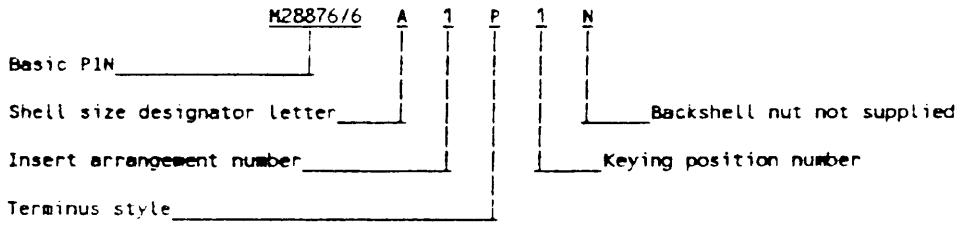

TABLE I. PIN designators.

Shell size	Designator	Insert arrangement number	Termini	Key position
11	A	1	P or S	1, 2, 3, 4, 5, or 6
13	B	1	P or S	1, 2, 3, 4, 5, or 6
15	C	1 or 2	P or S	1, 2, 3, 4, 5, or 6
23	F	1	P or S	1, 2, 3, 4, 5, or 6

Mating counterpart: Receptacle connectors specified in MIL-C-28876/1 through MIL-C-28876/5 and MIL-C-28876/11 through MIL-C-28876/14.

Installation and removal tools: As specified in MIL-I-81969/46 through MIL-I-81969/49, MIL-T-83523/6 and MIL-T-83523/8.

For qualified products listing, quality conformance, and periodic inspections, dummy termini shall be used in all unused cavities.

Revision letters are not used to denote changes due to the extensiveness of the changes.

Source: https://assist.dla.mil -- Downloaded: 2016-12-10T01:59Z
Check the source to verify that this is the current version before use.

CONCLUDING MATERIAL

Custodians:
Army - CR
Navy - SH
Air Force - 85
NASA - NA

Review activities:
Army - MI
Navy - AS, MC
Air Force - 17, 19, 80, 90, 99
DLA - ES

User activities:
Navy - OS, YD
Air Force - 13, 14

Preparing activity:
Navy - SH

Agent:
DLA - ES

(Project 6060-0093-6)

Source: https://assist.dla.mil -- Downloaded: 2016-12-10T01:59Z
Check the source to verify that this is the current version before use.