INCH-POUND

MIL-F-27272B
20 AUG 1991
SUPERSEDING
MIL-F-27272A
2 May 1966

MILITARY SPECIFICATION

FITTINGS, TETRAFLUOROETHYLENE HOSE HIGH TEMPERATURE, MEDIUM PRESSURE, GENERAL SPECIFICATION FOR

This specification is approved for use by all Departments and Agencies of the Department of Defense.

1. SCOPE

1.1 This specification covers the general requirements for medium-pressure, high-temperature, tetrafluorethylene hose fittings.

1.2 Classification. The fittings shall be the following types and classes listed as specified (see 6.2).

Class 1 - All corrosion-resisting steel (+450° F)
Class 2 - Combination aluminum and corrosion-resisting steel (+275° F)
(Lightwieght -8 size and larger)
Type II - Maximum fluid operating temperature +275°F
Type III - Maximum fluid operating temperature +450°F

Beneficial comments (recommendations, additions, deletions) and any pertinent data which may be of use in improving this document should be addressed to: The Technology & Industrial Services Division, SA-ALC/TIRDM, Kelly AFB, TX 78241-5609 by using the Standardization Document Improvement Proposal (DD Form 1426) appearing at the end of this document or by letter.

AMSC N/A FSC 4730

DISTRIBUTION STATEMENT A. Approved for public release; distribution is unlimited.

Source: https://assist.dla.mil -- Downloaded: 2016-11-16T07:36Z
Check the source to verify that this is the current version before use.

2. APPLICABLE DOCUMENTS

2.1. Government documents.

2.1.1 Specifications, Standards and handbooks. The following specifications and standards form a part of this document to the extent specified herein. Unless otherwise specified, the issues of these documents are those listed in the issue of Department of Defense Index of Specifications and Standards (DODISS) and supplement thereto, cited in the solicitation (see 6.2).

SPECIFICATIONS

Federal

TT-S-731	Standard Test Fluids, Hydrocarbon
PPP-B-566	Boxes, Folding, Paperboard
PPP-B-601	Boxes, Wood, Cleated-Plywood
PPP-B-621	Boxes, Wood, Nailed and Lock-Corner
PPP-B-636	Boxes, Shipping, Fiberboard
PPP-C-1842	Cushioning Material, Plastic, Open Cell

Military

DOD-D-1000	Drawings, Engineering and Associated Lists
MIL-P-116	Preservation, Methods of
MIL-H-5606	Hydraulic Fluid, Petroleum Base, Aircraft, Missile, and Ordnance
MIL-T-5624	Turbine Fuel, Aviation, Grade JP-4 and JP-5
MIL-S-7742	Screw Threads, Standard, Optimum Selected Series: General Specification For
MIL-L-7808	Lubricating Oil, Aircraft Turbine Engine, Synthetic Base
MIL-A-8625	Anodic Coatings, for Aluminum and Aluminum Alloys
MIL-S-8879	Screw Threads, Radius Root, for Increased Fatigue Life and Stress Levels
MIL-H-27267	Hose, Tetrafluoroethylene, High Temperature, Medium Pressure
MIL-C-87936	Cleaning, Compounds, Aircraft Exterior Surfaces, Water Dilutable

Standards

Federal

FED-STD-313	Material Safety Data, Transportation Data and Disposal Data for Hazardous Materials

Military

MIL-STD-105	Sampling Procedures and Tables for Inspection by Attributes
MIL-STD-129	Marking for Shipment and Storage

Source: https://assist.dla.mil -- Downloaded: 2016-11-16T07:36Z
Check the source to verify that this is the current version before use.

MIL-STD-130	Identification Marking of US Military Property
MIL-STD-453	Inspection, Radiographic
MIL-STD-831	Test Reports, Preparation of
MIL-STD-845	Fitting, Hose, Tetrafluoroethylene, High Temperature, Medium Pressure, Classification of Defects
MIL-STD-970	Standards and Specification, Order of Precedence for the Selection of
MS33514	Fitting End, Standard Dimensions for Flareless Tube Connection and Gasket Seal
MS33656	Fitting End, Standard Dimensions for Flared Tube Connection and Gasket Seal
MS33786	Fitting Installation, Flared Tube and Hose, Swivel

(See Supplement B1 for list of MS sheet form standards.)

(Unless otherwise indicated, copies of federal and military specifications and standards are available from the Standardization Documents Order Desk Building 4D, 700 Robbins Avenue, Philadelphia, PA 19111-5094.

2.2 Non-Government publications. The following documents form a part of this document to the extent specified herein. Unless otherwise specified, the issues of the documents which are DOD adopted are those listed in the issue of the DODISS cited in the solication. Unless otherwise specified, the issues of documents not listed in the DODISS are the issues of the documents cited in the solicitation (see 6.2).

American National Standards Institute (ANSI)

ANSI/ASME B46.1	Surface Texture (Surface Roughness, Waviness and Lay)

(Copies of the above publication may be obtained from the American National Standards Institute, 1430 Broadway New York, N.Y., 10018.)

Society of Automotive Engineers, INC (SAE)

APR 603	Impulse Testing of Hydraulic Hose, Tubing, and Fitting Assemblies

(Copies of the above publication may be obtained from the Society of Automotive Engineers, Inc (SAE) 400 Commonwealth Drive, Warrendale, PA 15096.)

(Non-Government standards and other publications are normally available from the organizations that prepare or distribute the document. These documents also may be available in or through libraries or other informational services.)

2.3 Order of the precedence. In the event of a conflict between the text of this document and references cited herein (except for related associated detail specifications, specification sheets, or MS standards), the text of this document takes precedence. Nothing in this document, however, supersedes applicable laws and regulations unless a specific exemption has been obtained.

3. REQUIREMENTS

Source: https://assist.dla.mil -- Downloaded: 2016-11-16T07:36Z
Check the source to verify that this is the current version before use.

3.1 Specification sheets. The individual item requirements shall be as specified herein and in accordance with the applicable specification sheet. In the event of any conflict between the requirements of this specification and the specification sheet, the latter shall govern. (If a specific requirement specified herein is not required for an item, it shall be so indicated on the specification sheet; for example, "Shock - N/A").

3.2 Qualification. The hose fittings furnished under this specification shall be products which are authorized by the qualifying activity for listing on the applicable qualified products list at the time of award of contract (see 4.4 and 6.3).

3.3 Materials. Shall be limited to those specified on the applicable detailed Military Standards (MS) from this document and the supplement listing.

3.3.1 Heat treatment. Aluminum alloy materials shall be heat treated in accordance with the applicable MS from this document and the supplement listing.

3.3.2 Hazardous materials. The materials cited in this documents are not considered hazardous in a passive environment. However, if the end user reworks (e.g., cuts grinds, welds) the material, hazardous dust and/or fumes may be generated. As a result, if the ingredients in this item are hazardous, then the item must be assumed to be hazardous and must be marked in accordance with MIL-STD-129, and Material Safety Data Sheets shall be provided in accordance with FED-STD-313.

3.3.3 Recovered materials. Recovered materials are those materials which have been collected from solid waste reprocessed to become a source of raw materials, as distinguished from virgin raw materials. The pieces and parts incorporated in the fittings may be newly fabricated from recovered materials to the maximum extent practicable, provided the fittings produced meets all other requirements of this specification.

3.4 Selection of specification and standards. Specification and standards for necessary commodities and services not specified herein shall be selected in accordance with MIL-STD-970.

3.5 Design and construction. The design and construction of the fittings shall be in accordance with the applicable MS. Special features shall not be used on the portion of the fitting that attaches to the hose. The fittings shall be designed for use with hose in accordance with MIL-H-27267.

3.5.1 Fittings. The fittings shall mate with fitting ends designed in accordance with MS33514, MS33656, and mounting pad as shown on MS33786 as applicable.

3.5.2 Dimensions. Dimensions of the fittings shall be as specified on the applicable MS.

3.5.3 Surface roughness. Surface roughness shall be in accordance with ANSI/ASME B46.1.

Source: https://assist.dla.mil -- Downloaded: 2016-11-16T07:36Z
Check the source to verify that this is the current version before use.

3.6 Performance. The fittings shall meet the followings performance requirements. (Test temperatures for Class 2 fittings shall be 275° F wherever a higher temperature is specified.)

3.6.1 Lubricant wear. (Applicable only to class 1 fittings.) The fittings shall be assembled six times and disassembled five times, not exceeding the torques listed in Table III (see 4.6.2).

3.6.2 Proof pressure. The fittings shall be subjected to the proof pressure specified in Table I for at least 30 seconds but not more than 5 minutes (see 4.6.4).

3.6.3 Leakage. The fittings shall not leak when subjected to 2 cycles in which the pressure is increased to 70 percent of burst pressure, held for 5 minutes, and then released (see 4.6.5).

3.6.4 Room temperature burst pressure. The fittings shall not leak or blow off the hose at any pressure below the burst pressure specified in Table I. Room temperature shall be 68° through 78° (see 4.6.6).

3.6.5 Stress degradation. The fittings shall not leakage as specified when tested in accordance with 4.6.7.1 and 4.6.7.2. Fittings shall not leak when pressurized at low temperature.

3.6.6 Effusion. The effusion rate of the assemblies shall not exceed the values listed in Table V (see 4.6.8).

3.6.7 Pneumatic surge. The fittings shall not leak when tested after being subjected to the test specified in 4.6.9.

3.6.8 Impulse. The impulse test shall be conducted in accordance with APR 603. The fittings shall not loosen, leak, or blow off the hose, when subjected to a minimum of 100,000 pressure impulse cycles at 400° ±10 F in accordance with 4.6.10.1.

3.6.9 High-temperature burst pressure. The fittings shall not leak or blow off the hose at any pressure below the burst pressure specified in Table I when tested in accordance with 4.6.11.

3.6.10 Fuel resistance. The fittings shall not leak when aged and pre-assure tested with the applicable fuels in accordance with 4.6.12 and 4.6.12.1.

3.6.11 Corrosion. The fittings shall function satisfactorily at the completion of 172 hours of cycling in accordance with 4.6.13.

3.6.12 Overtightening torque. The fittings shall withstand overtightening 15 times in accordance with 4.6.14.

3.7 Interchangeability. All parts having the same manufacturers part number and MS number shall be functionally and dimensionally interchangeable. The item identification and part number requirements of DOD-D-1000 shall govern the manufacturers part number and changes thereto.

Source: https://assist.dla.mil - Downloaded: 2016-11-16T07:36Z
Check the source to verify that this is the current version before use.

TABLE 1. Test samples, proof and burst pressure (for assemblies)

Size	Length of 6 samples for impulse test inches)	Length of 10 samples for all other tests (inches)	Operating pressure (psi min.)	*1/ Proof pressure psi min.)	Burst pressure room temp. (psi min.)	Burst pressure high temp. (psi min.)	Minimum bend radius (inside of bend) (inches)
-3/4	14	18	1,500	3,000	12,000	7,000	2
-4	14	18	1,500	3,000	12,000	7,000	2
-5	16	18	1,500	3,000	10,000	6,500	2
-6	18	18	1,500	3,000	9,000	6,500	4
-8	21	18	1,500	3,000	8,000	6,000	4-5/8
-10	23-1/2	18	1,500	3,000	7,000	5,500	5-1/2
-12	27-1/2	18	1,000	2,000	5,000	3,500	6-1/2
-16z	18	18	1,250	2,500	5,000	3,500	7-3/8
-20z	18	18	1,000	2,000	4,000	3,000	11
-24z	18	18	1,000	2,000	4,000	3,000	14

*1/ Assemblies having aluminum flange fittings shall be proof pressure tested to the pressures listed under "Operating pressure" above. Assemblies having steel flange fittings shall be proof pressure tested to the values listed in the "Proof pressure colum."

Source: https://assist.dla.mil -- Downloaded: 2016-11-16T07:36Z
Check the source to verify that this is the current version before use.

3.8 Screw threads. Threads shall be in accordance with MIL-S-7742, except those for coupling nuts mating with MS33514 or MS33656 fitting ends, which shall be in accordance with MIL-S-8879.

3.8.1 Nipple threads. MIL-S-7742 threads on corrosion resistant steel nipples shall be formed by rolling.

3.9 Finish.

3.9.1 Aluminum parts. Unless otherwise specified, aluminum parts shall be finished in accordance with MIL-A-8625.

3.9.2 Corrosion-resisting steel parts. Unless otherwise specified, corrosion-resisting steel parts shall be passivated by immersion in a solution of 2 percent sodium dichromate in nitric acid of a concentration of 15 to 25 percent by volume for 15 to 30 minutes at a temperature of 115° ±5° F. Parts shall then be thoroughly rinsed in water and dried (see 4.6.13).

3.10 Brazing. Fittings requiring brazing operations shall be brazed as specified on the applicable MS. The requirements of paragraph titled "Detailed data" and "Retention of radiographs" of MIL-STD-453 shall not apply to brazed corrosion resisting steel parts. Brazed fittings shall be tested in accordance with 4.6.3.

3.11 Identification of product. Fittings shall be marked for identification in accordance with MIL-STD-130 and applicable MS.

3.12 Workmanship. Fittings shall be free from cracks, laps, seams, burrs, longitudinal and spiral tool marks, or any other defects which may detrimentally affect their suitability for the service use intended.

4. QUALITY ASSURANCE PROVISIONS

4.1 Responsibility for inspection. Unless otherwise specified in the contract or purchase order, the contractor is responsible for the performance of all inspection requirements (examinations and tests) as specified herein. Except as otherwise specified in the contract or purchase order, the contractor may use his own or any other facilities suitable for the performance of the inspection requirements specified herein, unless disapproved by the Government. The Government reserves the right to perform any of the inspections set forth in this specification where such inspections are deemed necessary to ensure supplies and services conform to prescribed requirements.

4.1.1 Responsibility for compliance. All items shall meet all requirements of sections 3 and 5. The inspection set forth in this specification shall become a part of the contractors overall inspection system or quality program. The absence of any inspection requirements in the specification shall not relieve the contractor of the responsibility of ensuring that all products or supplies submitted to the Government for acceptance comply with all requirements of the contract. Sampling inspection, as part of manufacturing operations, is an acceptable practice to ascertain conformance to requirements, however, this does not authorize submission of known defective material, either indicated or actual, nor does it commit the Government to accept defective material.

Source: https://assist.dla.mil -- Downloaded: 2016-11-16T07:36Z
Check the source to verify that this is the current version before use.

4.2 Classification of inspections. The inspection requirements specified herein are classified as follows:

(a) Qualification inspections (see 4.4)
(b) Quality conformance inspection (see 4.5)

4.3 Test conditions.

4.3.1 Preparation of test specimens. Test specimens shall be prepared by assembling straight-type and 90-degree end fittings (see 4.4.1.2), designed to mate with fitting ends in accordance with MS33656 with hose conforming to MIL-H-27267. The length of the assemblies shall be as specified in Table I, and assembly and disassembly procedures shall be as follows.

4.3.1.1 Assembly procedures.

4.3.1.1.1 Cutting the hose. The hose shall be cut to the required length. Using a cutoff wheel, each end shall be cut square. Care shall be taken to minimize braid flareout.

4.3.1.1.2 Flaring the hose. One end of the hose wire braid shall not flare out as much as the other end. The sockets shall be placed back-to-back and the small end of the hose inserted through both sockets with a threading motion.

4.3.1.1.3 Nipple hex. The nipple hex shall be held firmly in a vise and the hose pushed onto the nipple. The hose shall be oscillated around the nipple to separate the wire braid from the tube. This applies only to the neck-down end. (The hose shall be started onto the nipple carefully to prevent damage to the end of the tube.) The hose shall then be removed from the nipple.

4.3.1.1.4 Inserting the sleeve. The sleeve shall be inserted between the hose braid and tube. If the hose is properly expanded as specified in 4.3.1.1.3, the sleeve will start easily. The sleeve shall be started by hand and completely positioned by pushing firmly against a flat surface until the tube bottoms against the shoulder inside sleeve.

4.3.1.1.5 Inserting the tube of the hose. The tube of the hose shall be fitted to the sleeve by pushing the sleeve and hose onto the nipple with a steady force and a slight rotation of the hose until the sleeve bottoms against the nipple chamber. The sleeve and hose shall be removed while rotating slightly, and a check made to insure that the tube is still bottomed against the sleeve shoulder.

4.3.1.1.6 Sleeve bottom against the nipple chamber. The hose and sleeve shall be pushed again onto the nipple until the sleeve bottoms against the nipple chamber. The socket shall be slid up and hand threaded onto the nipple. No additional lubricant (Class I fittings only) will be required since the nipple is dry film lubricated. SAE-30 lubricant shall be used for Class 2 fittings.

4.3.1.1.7 Torque wrench. With the proper size torque wrench, the socket

Source: https://assist.dla.mil -- Downloaded: 2016-11-16T07:36Z
Check the source to verify that this is the current version before use.

and nipple shall be tightened together, until the minimum gap (0.023 inch) is obtained. The final reading of the torque wrench shall be recorded. (See Figure 1 for gap measurement.)

4.3.1.2 Disassembly procedures.

4.3.1.2.1 Removing the nipple. With the proper size wrench, the nipple shall be loosened and removed from the socket and hose.

4.3.1.2.2 Removing the socket. The socket shall be loosened from the hose by holding the hose behind the socket and firmly tapping the threaded end flat against a table or bench. The socket shall be threaded back off the end of the hose.

4.3.1.2.3 Removing the sleeve. The sleeve shall be removed by gripping it lightly with pliers across the outer diameter, or by inserting the nipple slightly into the end of the sleeve and gently prying it out without damaging the metal seal area of the sleeve. The socket shall then be slid off the hose.

4.3.1.2.4 Cleaning and inspection. The fitting components shall be cleaned with air pressure to remove dirt or other foreign matter, and shall be inspected in accordance with MIL-STD-845, prior to resembling.

4.4 Qualification inspection.

4.4.1 Sampling instruction. The samples shall consist of 32 fittings of each size as specified herein and tetrafluoroethylene hose conforming to MIL-H-27267 made up into 16 assemblies of the lengths, specified in Table I. All samples shall be identified with the manufacturer's name, part number, and the specification number.

4.4.1.1 Torque test. The samples shall also include two fittings of each size and class in each style to be qualified, flared and flareless, to be subjected to the overtightening torque test (4.6.14).

4.4.1.2 Fitting ends. Qualification inspections shall be performed on straight-type swivel ends (MS27053), except that samples 6, 8, 11, 13 and 14 shall have a 90-degree elbow-swivel nut (MS27057 and MS27060). Satisfactory qualification inspections on these fittings ends shall constitute qualification approval on fittings ends (MS27053 through MS27060) in the sizes inspected. Two additional assemblies having flareless style fittings ends of the size and class to be qualified shall be subjected to the examination of product (4.6.1), proof pressure (4.6.4), leakage (4.6.5), and room temperature burst pressure (4.6.6) tests. Satisfactory test results on these fitting ends (flareless style) shall constitute qualification approval on fitting ends (MS27381 through MS27385) in the size inspected. All other fittings that use an identical attachment method, as in the standard fittings (MS27060 and MS27381 through MS27385), but have special configurations, shall be submitted to the procuring activity for approval.

4.4.2 Qualification report and samples. When tests are performed at a location other than the laboratory of the activity responsible for qualifica-

Source: https://assist.dla.mil -- Downloaded: 2016-11-16T07:36Z
Check the source to verify that this is the current version before use.

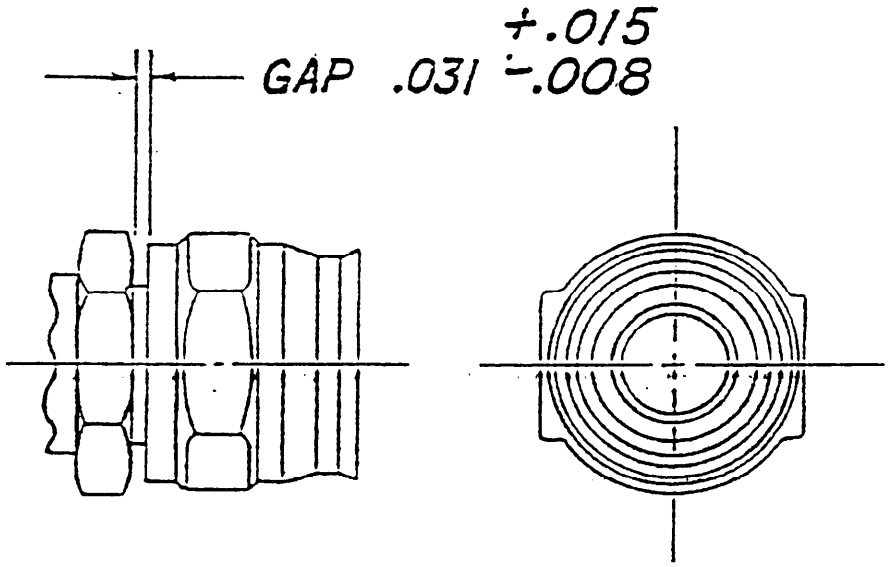

FIGURE 1. GAP MEASUREMENT

Source: https://assist.dla.mil -- Downloaded: 2016-11-16T07:36Z
Check the source to verify that this is the current version before use.

the shake does not extend nearer than 1 inch to any surface (see Figure 1)

tion (see 6.3), the following shall be furnished to that activity:

(a) Reports: Three copies of a test report in accordance with MIL-STD-831.
(b) Samples: All samples that were tested and three untested samples of each size for which qualification is desired, if requested by the activity responsible for qualification.

4.4.3 Inspections. The qualification inspections shall consist of all the inspections described under 4.6. The qualification inspection schedule shall be in accordance with Table II.

4.5 Quality conformance inspections. Quality conformance inspections shall be performed in conformance with MIL-STD-105, with the exception of the individual tests. The inspections shall consist of the following:

(a)	Individual tests	(4.5.1)
(b)	Sampling tests	(4.5.2)
(c)	Periodic control tests	(4.5.3)

4.5.1 Individual tests. Each fitting assembly, or parts thereof (of a procurement) shall be subjected to the examination of product as specified in 4.6.1.

4.5.1.1 Brazed, welded, and mechanically attached fittings. In addition to the test specified in 4.5.1, each fitting assembly, or subassembly having a brazed, welded, or mechanically attached joint shall be subjected to the joint integrating proof pressure test as specified in 4.6.3.

4.5.2 Sampling tests.

4.5.2.1 Lot. A sampling test lot shall consist of not more than 3,000 fitting assemblies, or parts thereof, all of one dash size, manufactured under essentially the same conditions, and at essentially the same time.

4.5.2.2 Tests. Sampling test fitting assemblies, or parts thereof, shall be individually selected at random over each entire lot. The fitting assemblies or parts thereof, shall be inspected for defects in accordance with MIL-STD-845. A single sampling plan shall be used, unless the procuring activity is notified in writing prior to testing that a double sampling plan will be used for the procurement. The Acceptable Quality Level (AQL) for each class of defects shall be as follows:

Major	-	1.0 percent defective
Minor	-	6.5 percent defective, at general inspection level II
Spot check	-	4.0 percent defective at special inspection level S-1

Additional fitting assemblies, or parts thereof, shall be selected at random from the lot. These shall be assembled to the appropriate standard hose and subjected in the order indicated, to tests listed below and specified in 4.6. A single sampling plan shall be used at special inspection level S-2 with an AQL of 1.5. Any fitting assembly, or part thereof, failing to pass any one, or

Source: https://assist.dla.mil -- Downloaded: 2016-11-16T07:36Z
Check the source to verify that this is the current version before use.

TABLE II. QUALIFICATION INSPECTION SCHEDULE

	Fittings	Hose assemblies									
No.	1/ 1 through 4	5	2/ 6	7	2/ 8	9	10	2/ 11	12	5/ 13 through 18	4/ 19 and 20
Paragraph	4.6.1	4.6.1	4.6.1	4.6.1	4.6.1	4.6.1	4.6.1	4.6.1	4.6.1	4.6.1	4.6.1
	4.6.14	3/4.6.2	3/4.6.2	3/4.6.2	3/4.6.2	3/4.6.2	3/4.6.2	3/4.6.2	3/4.6.2	3/4.6.2	4.6.4
		4.6.4	4.6.3	4.6.4	4.6.3	4.6.4	4.6.4	4.6.3	4.6.4	4.6.4	4.6.5
		4.6.12	4.6.4	4.6.13	4.6.4	4.6.7	4.6.7	4.6.4	4.6.13	4.6.10	4.6.6
		4.6.5	4.6.12	4.6.11	4.6.5			4.6.8	4.6.6		
		4.6.6	4.6.5		4.6.9			4.6.9			
			4.6.11								

1/ Two samples - flared type fittings.
Two samples - flareless type fittings.

2/ These samples shall have a 90° elbow fitting on one end of the assembly.

3/ Applies only to class I fittings.

4/ These samples are with flareless fittings.

5/ Two samples (13 and 14) are to have an MS27057 elbow fitting on one end of the assembly (if size is applicable).

Source: https://assist.dla.mil -- Downloaded: 2016-11-16T07:36Z
Check the source to verify that this is the current version before use.

a combination of the following tests, is counted as a defective unit:

(a)	Proof pressure	(4.6.4)
(b)	Leakage	(4.6.5)
(c)	Room temperature burst pressure	(4.6.6)

Fitting assemblies, or parts thereof, subjected to these destructive tests shall not be delivered to the Government.

4.5.3 Periodic control tests.

4.5.3.1 Lot. A periodic control lot shall consist of not more than 9,000 fitting assemblies, or parts thereof, all of one dash size, manufactured under essentially the same conditions, and at essentially the same time.

4.5.3.2 Tests. The following tests, as described under 4.6, shall be performed on random samples. An AQL of 1.5 percent is required for each test at special inspection level S-2 under single sampling plan.

(a)	Lubricant wear - 8 fittings (Class 1, only)	(4.6.2)
(b)	Impulse test - 4 unaged hose assemblies (with 8 brazed fittings) 1/	(4.6.10)
(c)	Room temperature burst pressure - 4 hose assemblies	(4.6.6)

1/ Applies only to brazed fittings.

Fittings subjected to the above tests shall not be delivered to the Government.

4.5.4 Rejection and retest. The provisions of this paragraph apply to both the sampling tests, and the periodic control tests. If a sample has defects equal to, or greater than the rejection number, the lot it represents shall be rejected. Once a lot, or part of a lot, has been rejected by any Government or commercial procuring activity, before it can be resubmitted for tests, full particulars concerning the cause of previous rejections and the suitable action taken to correct the defects in the lot shall be furnished, in writing, by the contractor.

4.5.5 Switching procedures. Switching inspection severity levels, e.g., from normal to tightened inspection, shall be in accordance with MIL-STD-105.

4.5.6 Destructive test samples. Prior to testing, a letter "D" shall be impression stamped on each end fitting assembly, or part thereof, used for destructive tests (see 4.5.2 and 4.5.3).

4.6 Inspection methods.

4.6.1 Examination of product. The fittings shall be examined to determine compliance with the material, workmanship, and marking requirements specified herein.

4.6.2 Lubricant wear (applicable only to Class 1 fittings). The fittings

Source: https://assist.dla.mil - Downloaded: 2016-11-16T07:36Z
Check the source to verify that this is the current version before use.

shall be assembled to the hose as specified in 4.3.1.1.1 through 4.3.1.1.7 six times and disassembled five times as specified in 4.3.1.2.1 through 4.3.1.2.3. If the final torque, as recorded in 4.3.1.1.7, exceeds the values specified in table III, the fittings shall be rejected. New ends of hose shall be used for each assembly (see 3.6.1).

TABLE III. TORQUE

Size	Socket torque (pound-inches)
-3/-4	120
-4	180
-5	240
-6	300
-8	540
-10	840
-12	1,020
-16Z	1,680
-20Z	2,760
-24Z	3,900

4.6.3 Joint integrity proof pressure. Fitting assemblies or subassemblies having brazed, welded, or mechanically attached joints shall be subjected to the applicable proof pressure specified in Table I. One end of the test sample shall be capped and the proof pressure applied through the other end for a minimum of 30 seconds and a maximum of 5 minutes. The test fluid shall be water. Any evidence of failure at any of these joints shall be cause for rejection of the fitting (see 3.10).

4.6.4 Proof pressure. All test samples of each size shall be subjected to the applicable proof pressure specified in Table I for minimum of 30 seconds and a maximum of 5 minutes. The test fluid shall be water. The samples shall then be purged with compressed gas and pressurized with air or nitrogen to at least the operating pressure specified in Table I for a minimum of 30 seconds. During this time, the samples shall be submerged in water containing a wetting agent. The samples shall be examined for leakage as evidenced by a stream of air bubbles. Any evidence of leakage at the end fittings shall be cause for rejection. However, random air bubbles entrapped or retained on the surface shall not be cause for rejection (see 3.6.2).

4.6.5 Leakage. Two test samples of each size shall be subjected to the leakage test, using test fluid in accordance with MIL-H-5606. While at room temperature, the sample shall be pressurized to 25 pounds per square inch (psi) for a minimum of 5 minutes. The pressure shall be increased to a value equal to 70 percent of the rated burst pressure specified in Table I and again held for a minimum of 5 minutes. The pressure shall then be completely released for 5 minutes, again increased to 70 percent of the rated burst pressure, and held for a minimum of 5 minutes. Any evidence of leakage at the end fittings shall be cause for rejection (see 3.6.3).

Source: https://assist.dla.mil -- Downloaded: 2016-11-16T07:36Z
Check the source to verify that this is the current version before use.

4.6.6 Room temperature burst pressure. Two test samples of each size shall be subjected to a pressure sufficient to burst the samples at a rate of pressure rise equal to 20,000 ±5,000 psi per minute. The samples shall be observed throughout the test and the type of failure and the pressure at which failure occurred shall be recorded. The end fittings shall not leak or blow off at any pressure specified in Table I. Room temperature shall be 68° through 78° (see 3.6.4).

4.6.7 Stress degradation

4.6.7.1 Stress degradation. Two hose assemblies of each size shall be subjected to this test. The hose assemblies shall be filled with oil conforming to MIL-L-7808 (see 3.6.5).

4.6.7.2 Hose assemblies. The hose assemblies shall then be placed in an oven which shall be maintained at a temperature of 450° ±10° F. Precautions shall be taken to assure that the hose assemblies do not come in contact with parts of the oven that are at a higher temperature. A pressure equal to the rated operating preassure specified in Table I shall be applied to the hose assemblies (see 3.6.5).

4.6.7.3 Flushing the hose assemblies. After a minimum of 20 hours at 450° F, the pressure shall be gradually released and the assemblies shall be removed from the oven, drained, and cooled to room temperature. The assemblies shall then be flushed with a quantity of new Type III fluid conforming to TT-S-735, equivalent in volume to at least twice the test sample volume and drained.

4.6.7.4 Filling the hose assemblies. The hose assemblies shall then be filled with new Type III fluid conforming to TT-S-735. A pressure equal to the rated operating pressure specified in Table I shall be applied and held for a minimum of 2 hours at room temperature.

4.6.7.5 Empting the hose assemblies. The hose assemblies shall then be emptied and filled with oil as specified in 4.6.7.1. The procedure specified in 4.6.7.2, 4.6.7.3, and 4.6.7.4 shall be repeated.

4.6.7.6 Hose assemblies filled and capped. The hose assemblies shall then be filled with Type III fluid conforming to TT-S-735 and individually capped. While at room temperature, the assemblies shall be bent around a mandrel having a radius equal to the minimum bend radius as specified in Table I. The assemblies shall be bent around the mandrel and straightened for 20 cycles. The assemblies shall be held by the fittings while the bending is being performed. The procedure specified in 4.6.7.1, 4.6.7.2., 4.6.7.3, and 4.6.7.4 shall be performed for a third time.

4.6.7.7 Pressurization period. Within 4 hours after the final 2-hour pressurization period with Type III fluid conforming to TT-S-735, the assemblies shall be drained and flushed with MIL-C-87936 and placed in an oven for 1 hour. The temperature of the oven shall be maintained at 160° ±10° F.

4.6.7.8 Drying process. Within 8 hours after completion of the drying process, the assemblies shall be subjected to an air-under-water test. To

Source: https://assist.dla.mil Downloaded: 2016-11-16T07:36Z
Check the source to verify that this is the current version before use.

conduct this test, the hose assemblies shall be installed in an apparatus constructed in accordance with Figure 2.

4.6.7.9 Apparatus. This apparatus, with the hose assembly installed, shall be immersed in water containing no wetting agent. A pressure equivalent to the rated operating pressure specified in Table I shall be applied for a period of 15 minutes to allow any entrapped air in the hose to escape. During this period, the shield of the test apparatus shall be closed.

4.6.7.10 Cause for rejection. The shield of the test apparatus shall then be opened and the pressure held for an additional 5-minute period. During this time, effused gas shall be collected in the increment of the apparatus which includes the juncture of the hose to the fitting. If, after the 5-minute period of pressurization, the rate of effusion at the junction of the hose to the fitting exceeds the values listed in Table IV, it shall be cause for rejection and considered failure to qualify.

TABLE IV. EFFUSION

Hose size	Cubic centimeters per inch per minute
-3/-4	8
-4	8
-5	8
-6	8
-8	4
-10	2
-12	2
-16Z	2
-20Z	2
-24Z	2

4.6.7.11 Leakage. At the completion of tests specified in 4.6.7.2 through 4.6.7.10, the hose assemblies shall be filled with oil and placed in a cold chamber for 8 hours while the temperature is maintained at -67° ±2° F. After the 8-hour cold soak, the assemblies shall be subjected to a pressure equal to the operating pressure specified in Table I. The pressure shall be held for a minimum of 5 minutes and then released. This shall be repeated for a total of 10 times with a minimum of 5 minutes between each pressure application and with MIL-F-27272B the samples still in the -67° ±2° F cold chamber. At the end of this time, oil at a temperature of 450° ±10° F shall be circulated through the samples. Within 15 seconds after introduction of the hot oil, the pressure shall be increased to the rated proof pressure specified in Table I and held for a minimum of 2 minutes. Any evidence of leakage at the end fittings shall be cause for rejection.

4.6.8 Effusion. Two hose assemblies of each size shall be used for this test. The assemblies shall be subjected to the operating pressure specified in Table I for 1 hour at room temperature. The total amount of effusion through the hose and two fittings shall be collected over the last 30 minutes of

Source: https://assist.dla.mil -- Downloaded: 2016-11-16T07:36Z
Check the source to verify that this is the current version before use.

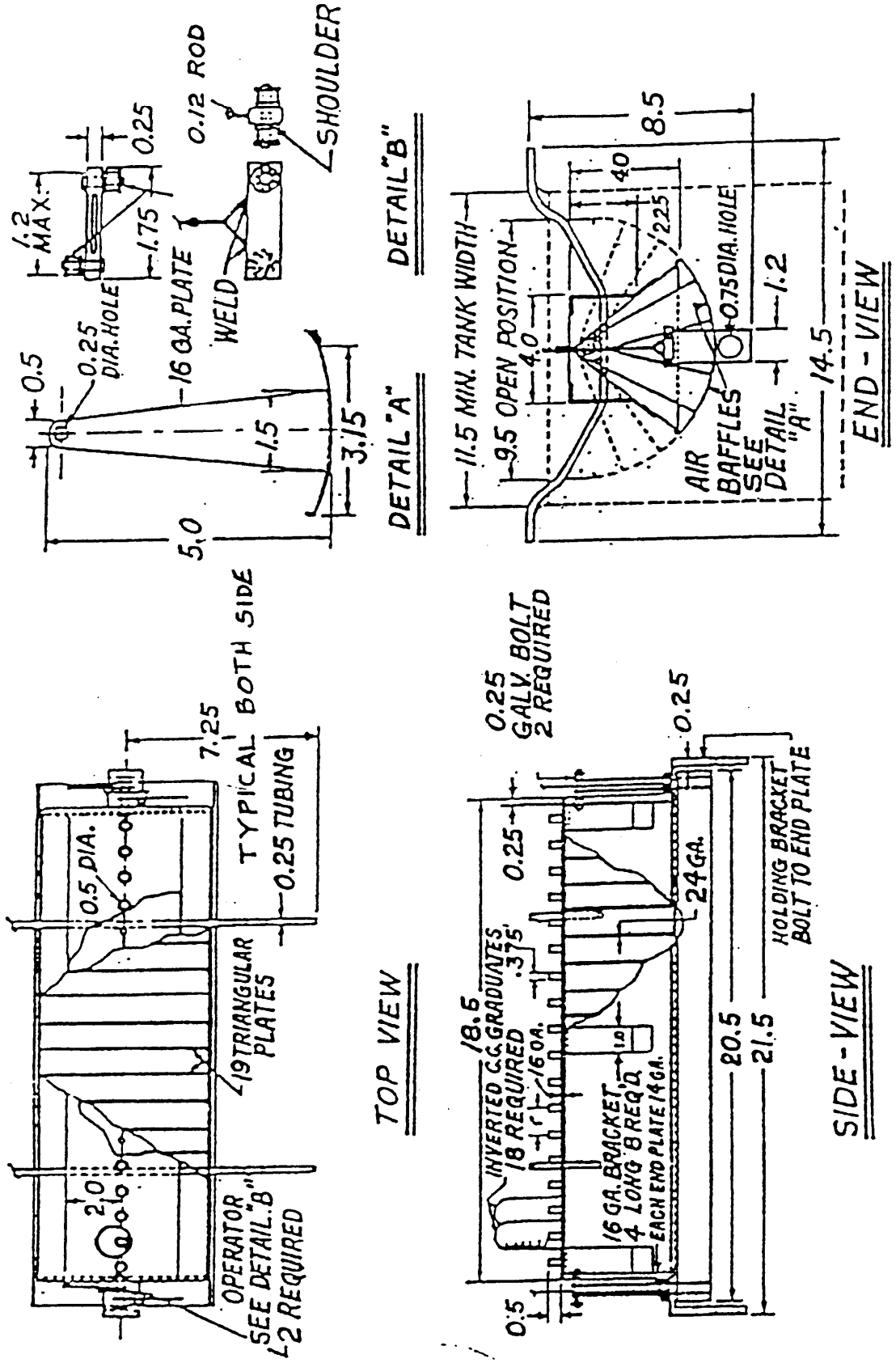

NOTES:

1. SOLDER ALL SHEET METAL JOINTS.
2. ALL PLATES 24 GA. GALV. STEEL EXCEPT OTHERWISE SPECIFIED.

FIGURE 2. APPARATUS FOR STRESS DEGRADATION TESTS

Source: https://assist.dla.mil -- Downloaded: 2016-11-16T07:36Z
Check the source to verify that this is the current version before use.

testing and shall not exceed the values in Table V. The collecting device should be similar to that shown on Figure 3 (see 3.6.6).

TABLE V. EFFUSION (C.C.)/FT. OF HOSE/30-MINUTE PERIOD

Size	-3/-4	-4	-5	-6	-8	-10	-12	-16Z	-20Z	-24Z
Effusion	4.0	4.0	5.0	5.0	5.0	5.0	6.0	8.0	8.0	8.0

4.6.9 Pneumatic surge. Two hose assemblies of each size that were subjected to the effusion test (4.6.8) shall be used for this test. The assemblies shall be installed in test apparatus in accordance with Figure 4. They shall then be subjected to the rated operating pressure specified in Table I for 25 minutes at room temperature. After this period of pressurization, the exhaust valve shall be opened within 50 milliseconds to permit the rapid discharge of the compressed gas. After 5 minutes, the valve shall be closed and the pressure recycled. This sequence of 25 minutes at operating pressure and 5 minutes at zero pressure shall be repeated a total of 16 times. The hose assemblies shall then be subjected to the rated proof pressure specified in Table I for a minimum of 2 minutes. Any evidence of leakage at the end fittings shall constitute failure. The filter downstream of the hose shall be examined for evidence of inner tube degradation. Any evidence of degradation shall constitute failure (see 3.6.7).

4.6.10 Impulse. The impulse test shall be conducted in accordance with APR 603 and the following:

4.6.10.1 Samples. Six test samples of each size, using lengths as specified in Table I, shall be subjected to this test. Three samples shall be immersed in hydraulic oils conforming to MIL-L-7808, or one of the three commercial oils listed in 4.6.7.1, for 168 hour at 400° ±10° F. The other three samples shall be aged in air 400° ±10° F for 168 hours. All samples shall be subjected to the proof pressure test specified in 4.6.4 (see 3.6.8).

4.6.10.2 Sizes. All sizes through -12 shall be installed in the impulse tester with a bend radius equal to that specified in Table I. Both ends of the samples shall be connected to a rigid support. Sizes -16z and larger shall be installed straight, one end of which may be left free.

4.6.10.3 Impulse pressure. Electronic measuring devices shall be used for determining the impulse pressures within the limits of figure 2 for sizes -3/-4 through -16Z. Sizes -20z through 24z shall be tested similarly, except that peak pressure need not exceed the operating pressures specified in Table I. All sizes shall be subjected to 100,000 pressure impulse cycles applied at a frequency of 60 to 70 cycles per minute (cpm). The temperature of the test fluid and ambient air shall be maintained at 400° ±10° F. The test fluid shall be in accordance with 4.6.7.1. Any evidence of leakage, blowoff of fittings, or other malfunction prior to completion of the 100,000 cycles shall be cause for rejection.

Source: https://assist.dla.mil - Downloaded: 2016-11-16T07:36Z
Check the source to verify that this is the current version before use.

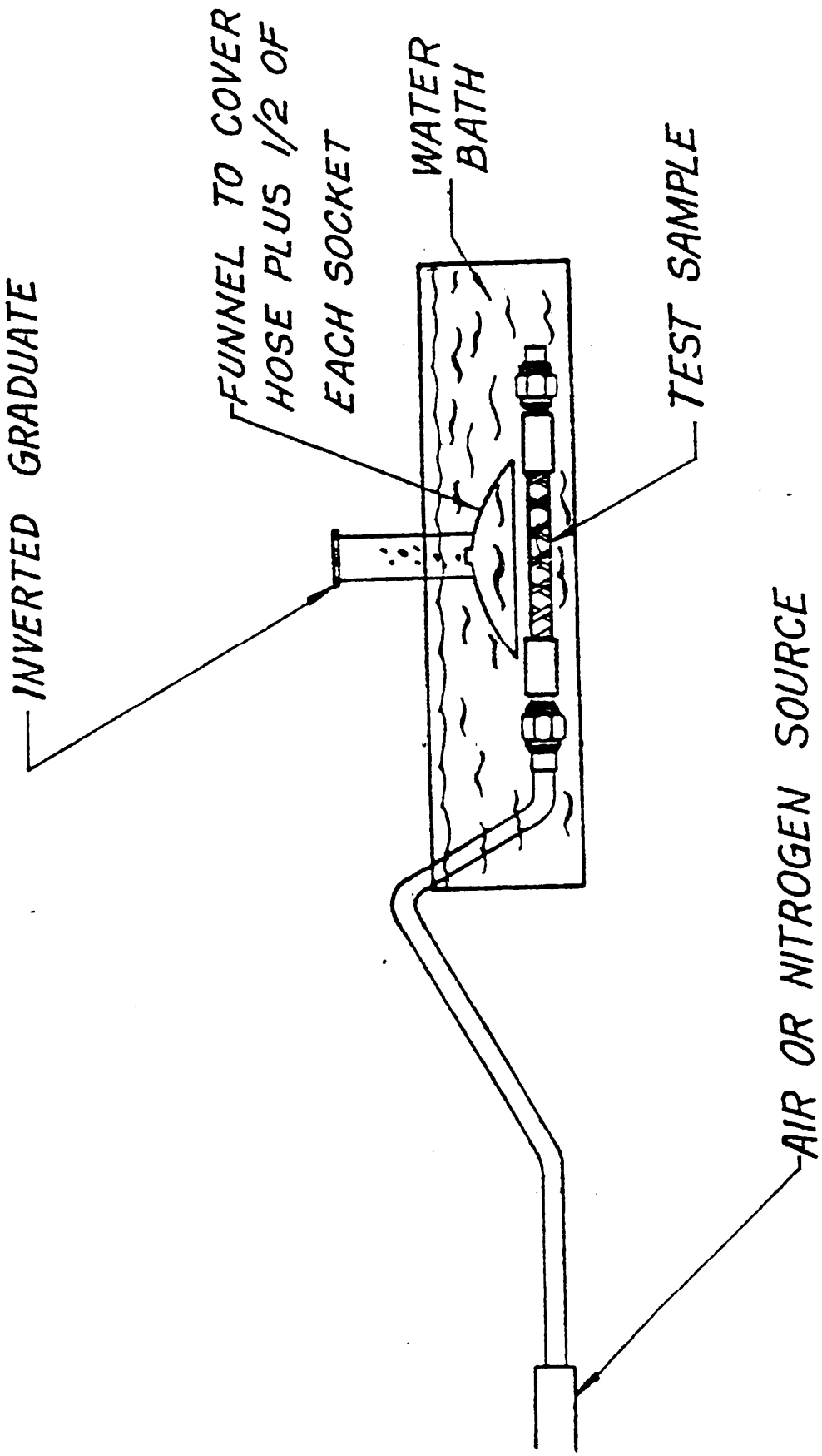

FIGURE 3. EFFUSION TEST DIAGRAM

Source: https://assist.dla.mil -- Downloaded: 2016-11-16T07:36Z
Check the source to verify that this is the current version before use.

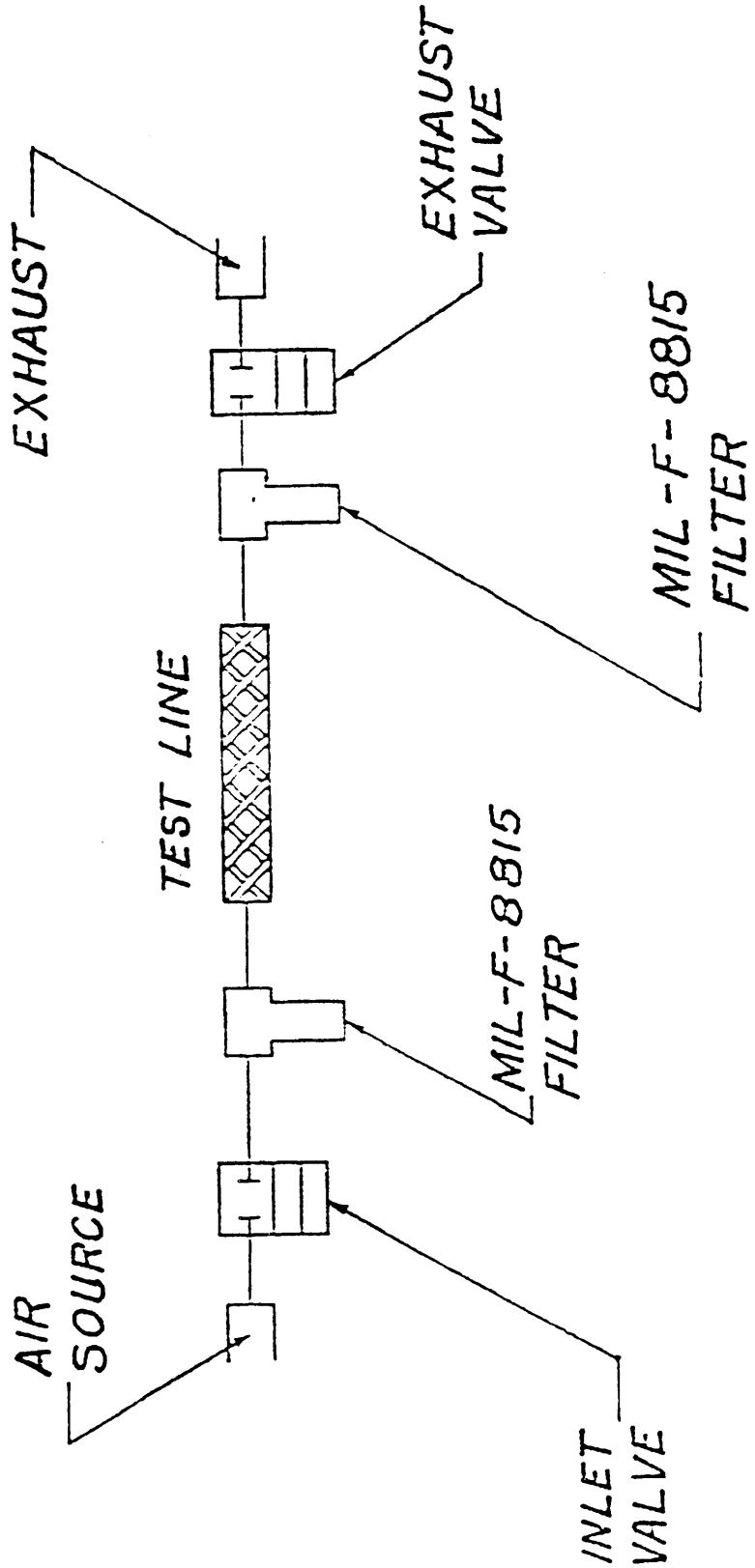

FIGURE 4. PNEUMATIC SURGE TEST DIAGRAM

Source: https://assist.dla.mil - Downloaded: 2016-11-16T07:36Z
Check the source to verify that this is the current version before use.

4.6.10.4 Dynamic pressure impulses. The curve shown on Figure 5 is the approximate pressure-time cycle determined to be of proper severity for impulse testing of the assemblies. While it is mandatory only that pressure peak rises to 125 percent of the operating pressure at some point prior to leveling off at rated pressure, it is desirable that the pressure-time curve be confined to the shaded area indicated. One benefit to be gained in this manner is that results of tests performed on different test machines will be more nearly comparable.

4.6.11 High-temperature burst pressure. Two test samples of each size shall be filled with a suitable test fluid and soaked for 1 hour with the ambient and fluid temperature at 450° ±10° F. After 1 hour, the pressure shall be raised to the operating pressure and held for 5 minutes. The pressure shall then be increased at a rate of 20,000 ±5,000 psi per minute until bursting or leakage occurs. Any leakage at the end fittings at pressures below the rated values listed in Table I shall be cause for rejection (see 3.6.9).

4.6.12 Fuel resistance. Two test samples of each size shall be subjected to a fuel resistance test (see 3.6.10).

4.6.12.1 Resistance test. The samples shall be filled with a test fluid conforming to TT-S-735 or fuel conforming to MIL-T-5624 and placed in an oven maintained at a temperature of 260° ±10° F for a period of 48 hours. Precautions shall be taken to assure that the samples do not come in contact with parts of the oven that are at a higher temperature. Oven temperatures high enough to ignite the fuel shall be avoided. Pressures equal to the operating pressures specified in Table I shall be applied to the test samples (3.6.10).

4.6.12.2 Leakage. At the end of the 48-hour period, the test samples shall be drained and allowed to cool for 20 minutes at room temperature. The samples shall then be filled with Type III fluid conforming to TT-S-735, and a pressure equal to the rated operating pressure applied and maintained for a minimum of 2 hours at room temperature. Any evidence of leakage at the end fittings during or at the completion of this test shall be cause for rejection.

4.6.13 Corrosion. Two test samples of each size and class shall be mounted in a vertical position and immersed in a 2-1/2 percent solution of sodium chloride for 5 minutes. They shall then be air dried at 140° F for 25 minutes. This cycling shall be continued for 172 hours with the hose pressurized to normal operating pressure. Following the cycling, one sample shall be subjected to the room temperature burst pressure test (4.6.6) and the other sample shall be subjected to the high-temperature burst pressure test (4.6.11). Any evidence of leakage or malfunction below the respective burst pressures specified in Table I, or any pitting corrosion, or stress corrosion that might adversely affect the life of the fitting shall be cause for rejection.

4.6.14 Overtightening torque. Two flared type end fittings of each size shall be subjected to the following test by assembling on a fitting end of steel construction in accordance with MS33656. The threads of the MS33656 fittings shall be lubricated with oil conforming to MIL-H-5606 prior to this test. The fittings shall be tightened to the appropriate overtightening torque specified in Table VI and then loosened. This sequence shall be repeated 15 times. After this sequence, there shall be no evidence of failure or deforma-

Source: https://assist.dla.mil - Downloaded: 2016-11-16T07:36Z
Check the source to verify that this is the current version before use.

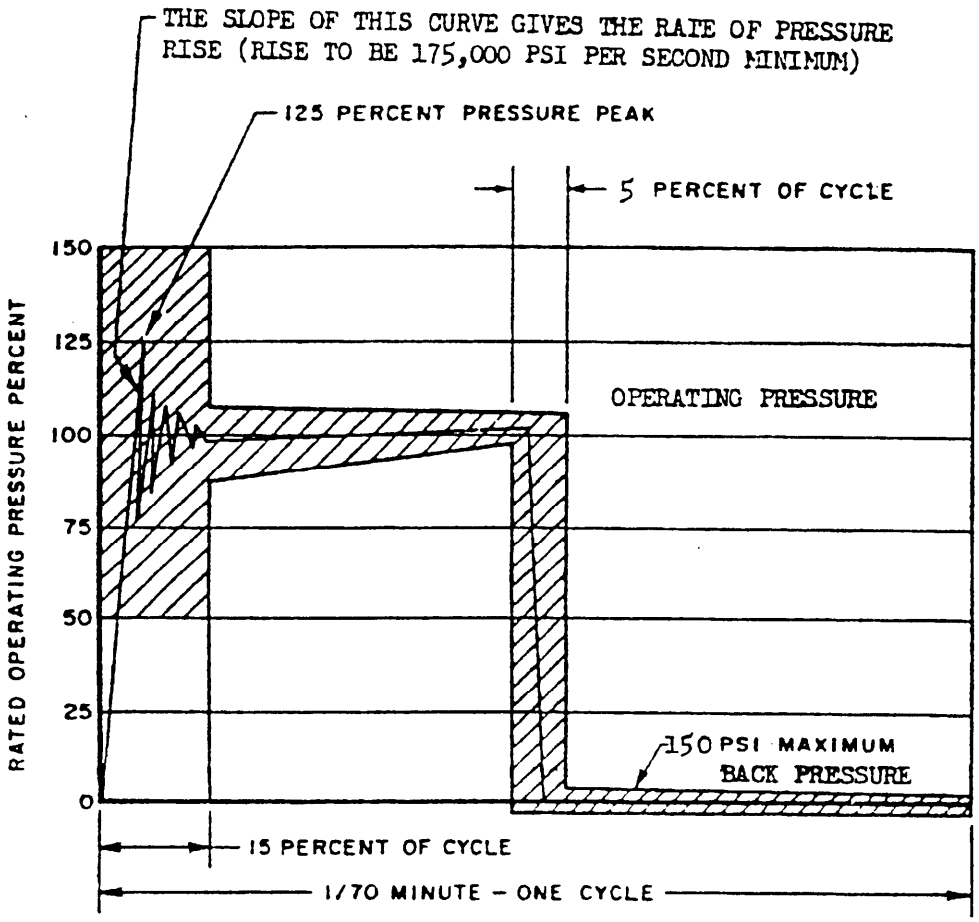

THE CURVE SHOWN ABOVE IS THE APPROXIMATE PRESSURE-TIME CYCLE DETERMINED TO BE OF PROPER SEVERITY FOR IMPULSE TESTING OF HYDRAULIC HOSE. IT IS CONSIDERED HIGHLY DESIRABLE THAT THE PRESSURE-TIME CURVE BE CONFINED TO THE SHADED AREA INDICATED. RATE OF RISE IS DEFINED AS THE SLOPE OF THE PRESSURE-TIME CURVE. FOR PURPOSES OF DEFINITION, THE SLOPE SHALL BE DETERMINED BY USE OF A STRAIGHT LINE BETWEEN 10 PERCENT AND 90 PERCENT OF PEAK PRESSURE. RATE OF RISE WILL BE CALCULATED AS FOLLOWS:

$$\text{RATE OF RISE (PSI/SEC)} = \frac{.9P - .1P}{T_2 - T_1}$$

WHERE: P = PEAK PRESSURE IN PSI
T_1 = TIME AT 10% P (SEC)
T_2 = TIME AT 90% P (SEC)

FIGURE 5. DYNAMIC PRESSURE IMPULSES

Source: https://assist.dla.mil -- Downloaded: 2016-11-16T07:36Z
Check the source to verify that this is the current version before use.

tion of the fitting assemblies, and the swivel nuts shall be free enough to permit turning on the nipple by hand. Overtightening torque shall also be applied to two flareless type end fittings of each size by assembling on a fitting end of steel construction in accordance with MS33514. Lubrication test sequence, the overtightening torques, and conditions for flareless fittings are the same as specified above for the flared type fittings (3.6.12).

4.6.15 Preservation, packaging, packing, and marking. Preparation for delivery shall be examined for conformance with section 5.

TABLE VI. OVERTIGHTENING TORQUE VALUES

Fitting size	Class 1 fittings (pounds-inches)	Class 2 fittings (pound-inches)
-3/-4	130	
-4	160	
-5	240	
-6	300	
-8	560	300
-10	700	400
-12	1,000	625
-16z	1,550	1,050
-20z	1,550	1,350
-24z	1,575	1,375

5. Packaging.

5.1 Preservation. Preservation shall be level A or C as specified.

5.1.1 Level A.

5.1.1.1 Cleaning. Fittings shall be cleaned by process C-1 of MIL-P-116.

5.1.1.2 Drying. Fittings shall be dried by an applicable procedure of MIL-P-116.

5.1.1.3 Preservation. Preservatives shall not be used.

5.1.1.4 Unit Packs. Fittings shall be unit packaged Method III of MIL-P-116, five each in a paperboard carton conforming to PPP-B-566. Cushioning shall conform to PPP-C-1842, Type III.

5.1.1.5 Level C. All fittings shall be preserved as specified for Level A, except vendors may use fiberboard box.

5.1.2 Intermediate Packs. Unit packs not exceeding 64 cubic inches in size shall be placed in intermediate containers conforming to PPP-B-636, Class domestic.

Source: https://assist.dla.mil - Downloaded: 2016-11-16T07:36Z
Check the source to verify that this is the current version before use.

5.2 Packing. Packing shall be Level A, B, or C as specified.

5.2.1 Level A. All fittings packaged as specified herein shall be packed in overseas type, style optional, shipping containers conforming to PPP-B-601 or PPP-B-621. Closure and strapping shall be in accordance with PPP-B-601 or PPP-B-621.

5.2.2 Level B. All fittings packaged as specified herein shall be packed in a class weather-resistant, style optional, shipping containers conforming to PPP-B-636. Closure and strapping shall be in accordance with PPP-B-636.

5.2.3 Level C. All fittings packaged as specified herein shall be packed in vendors commercial container.

5.3 Marking. In addition to any special marking required by the contract, each unit, intermediate and exterior container shall be marked in accordance with MIL-STD-129.

6. NOTES.

(This section contains information of a general or explanatory nature that may be helpful, but is not mandatory.)

6.1 Intended use. The fittings covered by this specification are intended for use in high-temperature fuel, lubricating oil, water-alcohol, chemical-fluid system, and hydraulic and pneumatic systems. The temperature range for Class 1 fittings is from -65° to +450° F and for Class 2 fittings from -65° to +275° F. Operating pressures are listed in Table I of this specification. High-pressure pneumatic storage system applications are not recommended. Installations in which the limits specified herein are exceeded or in which the application is not covered specifically by this specification will be subject to the approval of the procuring activity.

6.2 Acquisition requirements. Procurement documents should specify the follows:

(a) Title, number, and date of the specification.
(b) Sizes, Classes and Types of fittings required (see 1.2).
(c) Applicable levels of packaging and packing (see 5.1)

6.3 Qualification. With respect to products requiring qualification, awards will be made only for products which are, at the time of award of contract, qualified for inclusion in Qualified Products List QPL No. F-27272 whether or not such products have actually been so listed by that date. The attention of the contractors is called to these requirements, and manufacturers are urged to arrange to have the products that they propose to offer to the Federal Government tested for qualification in order that they may be eligible to be awarded contracts or purchase orders for the products covered by this specification. The activity responsible for the Qualified Product List is San Antonio Air Logistics Center, ATTN: SA-ALC/TIRDM, Kelly AFB, TX 78241-5000, and information pertaining to qualification of products may be obtained from that activity.

Source: https://assist.dla.mil -- Downloaded: 2016-11-16T07:36Z
Check the source to verify that this is the current version before use.

6.4 Subject term (key word) listing.

assemblies
nipples
sleeve
socket
tube

6.5 Changes from previous issue. Marginal notations are not used in this revision to identify changes with respect to the previous issue due to the extensiveness of the changes.

Custodians:
Army - ME
Navy - SH
Air Force - 99

Reviewer Activities:
Army - AV
Navy - AS
Air Force - 11, 69
DLA - CS

User Activities:
Army - MI

Preparing Activity:
Air Force - 82

Agent Activity:
DLA-CS

Project number:
4730-0094

Source: https://assist.dla.mil -- Downloaded: 2016-11-16T07:36Z
Check the source to verify that this is the current version before use.

STANDARDIZATION DOCUMENT IMPROVEMENT PROPOSAL

INSTRUCTIONS

The preparing activity must complete blocks 1, 2, 3, and 8. In block 1, both the document number and revision letter should be given.

2. The submitter of this form must complete blocks 4, 5, 6, and 7.
3. The preparing activity must provide a reply within 30 days from receipt of the form.

NOTE: This form may not be used to request copies of documents, nor to request waivers, or clarification of requirements on current contracts. Comments submitted on this form do not constitute or imply authorization to waive any portion of the referenced document(s) or to amend contractual requirements.

I RECOMMEND A CHANGE:	1. DOCUMENT NUMBER	2. DOCUMENT DATE (YYMMDD)
3. DOCUMENT TITLE		

4. NATURE OF CHANGE *(Identify paragraph number and include proposed rewrite, if possible. Attach extra sheets as needed.)*

5. REASON FOR RECOMMENDATION

6. SUBMITTER		
a. NAME *(Last, First, Middle Initial)*	b. ORGANIZATION	
c. ADDRESS *(Include Zip Code)*	d. TELEPHONE *(Include Area Code)* (1) Commercial (2) AUTOVON *(If applicable)*	7. DATE SUBMITTED *(YYMMDD)*

8. PREPARING ACTIVITY	
a. NAME	b. TELEPHONE *(Include Area Code)* (1) Commercial (2) AUTOVON
c. ADDRESS *(Include Zip Code)*	IF YOU DO NOT RECEIVE A REPLY WITHIN 45 DAYS, CONTACT: Defense Quality and Standardization Office 5203 Leesburg Pike, Suite 1403, Falls Church, VA 22041-3466 Telephone (703) 756-2340 AUTOVON 289-2340

Source: https://assist.dla.mil -- Downloaded: 2016-11-16T07:36Z
Check the source to verify that this is the current version before use.