METRIC
MIL-C-0085045D(NAVY)
30 November 1988
USED IN LIEU OF
DOD-C-85045C
30 July 1986

MILITARY SPECIFICATION

CABLE, FIBER OPTIC, SHIPBOARD (METRIC)

GENERAL SPECIFICATION FOR

This specification is approved for use by the Naval Sea Systems Command based upon currently available technical information but it has not been approved for promulgation as a coordinated revision of DOD-C-85045C. It is subject to modification. However, pending its promulgation as a coordinated military specification, it may be used in acquisition.

1. SCOPE

1.1 Scope. This specification covers the performance requirements and characteristics for all-dielectric-construction fiber optic cables that are intended to be lightweight, low fire hazard, and environment tolerant. The fiber optic cables are suitable for Naval shipboard applications to interconnect various units of systems employing optical transmission.

1.2 Classification. Fiber optic cables covered by this specification are classified as specified in 1.2.1 and 1.2.2.

1.2.1 Fiber optic cable configuration type. The fiber optic cable configuration type is designated by a single letter as indicated in table I:

Beneficial comments (recommendations, additions, deletions) and any pertinent data which may be of use in improving this document should be addressed to: Commander, Naval Sea Systems Command, SEA 55Z3, Department of the Navy, Washington, DC 20362-5101 by using the self-addressed Standardization Document Improvement Proposal (DD Form 1426) appearing at the end of this document or by letter.

AMSC N/A FSC 6015
DISTRIBUTION STATEMENT A. Approved for public release; distribution is unlimited.

Source: https://assist.dla.mil -- Downloaded: 2016-11-25T22:28Z
Check the source to verify that this is the current version before use.

TABLE I. Fiber optic cable configuration type.

Cable configuration type	Designation
Buffered fiber 1/	A
OFCC 2/	B
Cable bundle 3/	C
Ribbon 4/	D

1/ Buffered fiber (see 6.4.4).
2/ OFCC - Optical fiber cable component (see 6.4.15).
3/ Cable bundle (see 6.4.5).
4/ Ribbon (see 6.4.16).

1.2.2 Optical fiber type. The optical fiber (see 6.4.14) type used in a fiber optic cable is designated by two letters as indicated in table II. If more than one optical fiber type is used in a single fiber optic cable, all of the appropriate letters in table II are used in the part designator (see 6.7).

TABLE II. Optical fiber type.

Optical fiber type	Designation
Graded index, glass core and glass cladding, multimode 1/ 2/	MM
Dispersion-unshifted, glass core and glass cladding, single-mode 3/	SU
Dispersion-shifted, glass core and glass cladding, single-mode	SS
Dispersion-flattened, glass core and glass cladding, single-mode	SF

1/ Cladding (see 6.4.7).
2/ Multimode fiber (see 6.4.13).
3/ Single-mode fiber (see 6.4.19).

Source: https://assist.dla.mil -- Downloaded: 2016-11-25T22:28Z
Check the source to verify that this is the current version before use.

2. APPLICABLE DOCUMENTS

2.1 Government documents.

2.1.1 Specifications, standards, and handbooks. The following specifications, standards, and handbooks form a part of this document to the extent specified herein. Unless otherwise specified, the issues of these documents are those listed in the issue of the Department of Defense Index of Specifications and Standards (DoDISS) and supplement thereto, cited in the solicitation (see 6.2).

SPECIFICATIONS

FEDERAL

TT-I-735 - Isopropyl Alcohol.

MILITARY

MIL-S-901 - Shock Test, H.I. (High Impact); Shipboard Machinery, Equipment and Systems, Requirements for.
MIL-H-5606 - Hydraulic Fluid, Petroleum Base; Aircraft, Missile, and Ordnance.
MIL-T-5624 - Turbine Fuel, Aviation, Grades JP-4 and JP-5.
MIL-C-12000 - Cable, Cord, and Wire, Electric; Packaging of.
MIL-F-16884 - Fuel, Naval Distillate.
MIL-L-17331 - Lubricating Oil, Steam Turbine and Gear, Moderate Service.
MIL-L-23699 - Lubricating Oil, Aircraft Turbine Engine, Synthetic Base.
MIL-S-24235 - Stuffing Tubes, Metal, and Packing Assemblies for Electric Cables, General Specification for.
MIL-S-24235/2 - Stuffing Tubes, Metal, and Packing Assemblies for Electric Cables, Packing Assemblies for Pressureproof Bulkhead.
DOD-F-49291 - Fiber, Optical, Shipboard, General Specification for.

STANDARDS

FEDERAL

FED-STD-228 - Cable and Wire, Insulated; Methods of Testing.
FED-STD-313 - Material Safety Data, Transportation Data and Disposal Data for Hazardous Materials Furnished to Government Activities.

Source: https://assist.dla.mil -- Downloaded: 2016-11-25T22:28Z
Check the source to verify that this is the current version before use.

MILITARY

MIL-STD-104 - Limits for Electrical Insulation Color.
MIL-STD-167-1 - Mechanical Vibrations of Shipboard Equipment (Type I - Environmental and Type II - Internally Excited).
DOD-STD-347 - Product Assurance Program Requirements for Fiber Optic Components.
MIL-STD-454 - Standard General Requirements for Electronic Equipment.
MIL-STD-810 - Environmental Test Methods and Engineering Guidelines.
MIL-STD-1285 - Marking of Electrical and Electronic Parts.
DOD-STD-2003 - Electric Plant Installation Standard Methods for Surface Ships and Submarines.

(Unless otherwise indicated, copies of federal and military specifications, standards, and handbooks are available from the Naval Publications and Forms Center, (ATTN: NPODS), 5801 Tabor Avenue, Philadelphia, PA 19120-5099.)

2.1.2 Other Government documents, drawings, and publications. The following other Government documents, drawings, and publications form a part of this specification to the extent specified herein. Unless otherwise specified, the issues are those cited in the solicitation.

DRAWINGS

NAVAL SEA SYSTEMS COMMAND (NAVSEA)
9000-S6202-73899 - Stuffing Tubes (Steel) Types 1, 2, 3, 4 for Passing Electric Cables Through Bulkheads on Submarines.

(Copies of drawings required by contractors in connection with specific acquisition functions should be obtained from the contracting activity or as directed by the contracting activity.)

2.2 Non-Government publications. The following documents form a part of this document to the extent specified herein. Unless otherwise specified, the issues of the documents which are DoD adopted are those listed in the issue of the DoDISS cited in the solicitation. Unless otherwise specified, the issues of documents not listed in the DoDISS are the issues of the documents cited in the solicitation (see 6.2).

AMERICAN SOCIETY FOR TESTING AND MATERIALS (ASTM)
D 470 - Crosslinked Insulations and Jackets for Wire and Cable, Methods of Testing.
D 512 - Chlorine Ion in Water, Test Methods for (DoD adopted).
D 2565 - Operating Xenon Arc-Type (Water Cooled) Light-Exposure Apparatus With and Without Water for Exposure of Plastics, Practice for.

Source: https://assist.dla.mil -- Downloaded: 2016-11-25T22:28Z
Check the source to verify that this is the current version before use.

ASTM (Continued)

D 3761 - Standard Test Method for Total Fluorine in Coal by the Oxygen Bomb Combustion/Ion Selective Electrode Method.

E 84 - Standard Test Method for Surface Burning Characteristics of Building Materials.

E 662 - Standard Test Method for Specific Optical Density of Smoke Generated by Solid Materials.

(Application for copies should be addressed to the American Society for Testing and Materials, 1916 Race Street, Philadelphia, PA 19103.)

ELECTRONIC INDUSTRIES ASSOCIATION (EIA)

455 - Standard Test Procedures for Fiber Optic Fibers, Cables, Transducers, Connecting and Terminating Devices. (DoD adopted)

455-12 - Fluid Immersion Test for Fiber Optic Connecting Devices.

455-13 - Visual and Mechanical Inspection of Fibers, Cables, Connectors and/or Other Fiber Optic Devices. (DoD adopted)

455-16 - Salt Spray (Corrosion) Test for Fiber Optic Components.

455-20 - Measurement of Change in Optical Transmittance. (DoD adopted)

455-25 - Impact Testing of Fiber Optic Cables and Cable Assemblies.

455-33 - Fiber Optic Cable Tensile Loading and Bending Test.

455-41 - Compressive Loading Resistance of Fiber Optic Cables. (DoD adopted)

455-42 - Optical Crosstalk in Fiber Optic Components.

455-46 - Spectral Attenuation Measurement for Long-Length, Graded-Index Optical Fibers. (DoD adopted)

455-50 - Light Launch Conditions for Long-Length Graded-Index Optical Fiber Spectral Attenuation Measurements. (DoD adopted)

455-63 - Torsion Test for Optical Waveguide Fiber. (DoD adopted)

455-65 - Optical Fiber Flexure Test.

455-78 - Spectral Attenuation Cut-Back Measurement for Single Mode Optical Fibers.

455-84 - Jacket Self-Adhesion (Blocking) Test for Fiber Optic Cable. (DoD adopted)

455-91 - Fiber Optic Cable Twist-Bend Test. (DoD Adopted)

455-99 - Gas Flame Test for Special Purpose Fiber Optic Cable. (DoD adopted)

455-104 - Fiber Optic Cable Cyclic Flexing Test.

455-160 - Fiber Optic Cable Temperature Shock Test.

455-162 - Fiber Optic Cable Temperature-Humidity Cycling.

(Application for copies should be addressed to Electronic Industries Association, 2001 Eye Street, NW, Washington, DC 20006.)

Source: https://assist.dla.mil -- Downloaded: 2016-11-25T22:28Z
Check the source to verify that this is the current version before use.

MINISTRY OF DEFENSE, UNITED KINGDOM

NAVAL ENGINEERING STANDARD (NES)
713 - Determination of the Toxicity Index of the Products of Combustion from Small Specimens of Materials.

(Application for copies should be addressed to the contracting activity or as directed by the contracting officer).

UNDERWRITERS LABORATORIES, INC. (UL)
910 - Test Method for Fire and Smoke Characteristics of Electrical and Optical-Fiber Cables Used in Air Handling Spaces.

(Application for copies should be addressed to Underwriters Laboratories, Inc., 1285 Walt Whitman Road, Melville, NY 11747.)

(Nongovernment standards and other publications are normally available from the organizations that prepare or distribute the documents. These documents also may be available in or through libraries or other informational services.)

2.3 Order of precedence. In the event of a conflict between the text of this document and the references cited herein (except for related associated detail specifications, specification sheets, or MS standards), the text of this document takes precedence. Nothing in this document, however, supersedes applicable laws and regulations unless a specific exemption has been obtained.

3. REQUIREMENTS

3.1 Specification sheets. The individual item requirements shall be as specified herein and in accordance with the applicable specification sheet. In the event of any conflict between the requirements of this specification and the specification sheet, the latter shall govern.

3.2 First article. When specified in the contract or purchase order, samples shall be subjected to first article inspection (see 4.5 and 6.4).

3.3 Materials. The cable shall be constructed of material as specified (see 3.1). Materials selected for cable usage shall be of a type and quality to assure compliance with the requirements of this specification, and shall be physically and chemically compatible for their intended use and throughout their intended lifetime which shall be not less than 20 years. All combinations of materials used shall be nonnutrient to fungus. All materials used in the cable shall be electrically nonconductive. Where new or questionable material is being considered for use in the cable construction, the manufacturer shall furnish the toxicological data and formulations required to evaluate the safety of the material for the proposed use. Unless otherwise specified (see 3.1), materials and combinations of materials used in cable construction shall meet the requirements for toxic fumes produced by flame. The material shall have no adverse effect on the health of personnel when used for its intended purpose. Questions pertinent to this effect shall be referred by the contracting activity to the appropriate departmental medical service who will act as an advisor to the contracting agency.

Source: https://assist.dla.mil -- Downloaded: 2016-11-25T22:28Z
Check the source to verify that this is the current version before use.

3.3.1 Recovered materials. Unless otherwise specified herein, all material incorporated in the products covered by this specification shall be new. Products may be fabricated using raw materials produced from recovered bulk materials to the extent practicable if the intended use of the product is not jeopardized. The term "recovered materials" means materials which have been collected or recovered from solid waste and reprocessed to become part of a source of raw materials, as opposed to virgin raw materials. None of the above shall be interpreted to mean that the use of partially processed, assembled, used or rebuilt products are allowed under this specification.

3.3.2 Optical fiber buffer, OFCC, cable bundle, and ribbon. Materials used for the optical fiber buffer, OFCC, cable bundle and ribbon shall meet the requirements as specified (see 3.1). Fiber buffer in this specification shall refer to the additional protective layer over the coated optical fiber.

3.3.3 Filler. The materials used as fillers shall meet the requirements as specified (see 3.1). The fillers shall be evenly distributed, easily removable, and shall provide firmness and roundness to the finished cable.

3.3.3.1 Waterblocking material. Waterblocking material used in cable interstices shall be compatible with all other cable materials. The material shall be clean, nontacky, and nonirritating to the touch when not exposed to moisture. The material shall be free-stripping from the cable and components by hand and shall not require the use of chemicals or other mechanical means of removal. The material shall not interfere with any termination technique used with finished cable or components.

3.3.4 Strength members. Strength members used in the cable shall meet the requirements as specified (see 3.1).

3.3.5 Jackets. Materials used for jackets (inner and outer) shall meet the requirements as specified (see 3.1).

3.3.6 Material Safety Data Sheet (see 6.5). The contracting activity shall be provided a Material Safety Data Sheet (MSDS) at the time of contract award. The MSDS shall be provided in accordance with the requirements of FED-STD-313. The MSDS shall be included with each shipment of the material covered by this specification (see 6.5).

3.4 Design and construction. The construction and physical dimensions of the finished cable and cable components shall be as specified (see 3.1 and 4.7.2). The cable shall consist of one or more optical transmission elements surrounded by protective layers to provide performance and dimensional characteristics as specified (see 3.1). The cable shall be of circular cross-section. The surface of the jacket shall be dry and free from any coating, film, or treatment which would interfere with the bonding to the jacket of encapsulating or molding materials used in splicing and terminating. Unless otherwise specified (see 3.1), the minimum bend radius (see 6.4.12) shall be six times that of the cable outer diameter rounded to the next centimeter (cm). The cable and the cable components shall be designed to comply with the specified properties while subject to specific operating and storage temperature ranges as specified (see 3.1).

Source: https://assist.dla.mil -- Downloaded: 2016-11-25T22:28Z
Check the source to verify that this is the current version before use.

3.4.1 Optical fibers. Optical fiber shall be in accordance with DOD-F-49291 and the applicable specification sheets (see 3.1).

3.4.1.1 Number of optical fibers. The total number of optical fibers in the cable shall be as specified (see 3.1). The number of fibers in a ribbon, cable bundle, OFCC, or binder (see 6.4.3) shall be not greater than 12.

3.4.2 Cable configuration. The detailed cable configuration shall be as specified (see 3.1) and shall use one of the configuration types in 1.2.1.

3.4.2.1 Buffered fibers. Unless otherwise specified (see 3.1), the outer diameter of the buffered fiber shall be 900 microns (μm). Unless otherwise specified (see 3.1), the buffer design shall be tight buffer. Unless otherwise specified (see 3.1), the maximum fiber concentricity in buffer shall be 0.65 for 900 μm buffered fibers.

3.4.2.1.1 Buffered fiber color coding. Individual fiber buffers shall be color-coded for identification by colors as shown in table III. The limits for all colors, except light blue and light orange, shall be in accordance with MIL-STD-104, class 1. The limits for light blue and light orange shall be in accordance with MIL-STD-104, class 2.

TABLE III. Buffer, cable bundle, OFCC, binder, and ribbon color code.

Number	Identification colors
1	blue
2	orange
3	green
4	brown
5	gray (slate)
6	white
7	red
8	black
9	yellow
10	violet
11	light blue
12	light orange

3.4.2.2 Optical fiber cable components (OFCC). The OFCC dimensions and concentricity requirements shall be as specified (see 3.1). Since the OFCC contains a buffered fiber, the requirements of 3.4.2.1 shall also apply.

3.4.2.2.1 OFCC jacket color coding. Individual OFCC jackets shall be color-coded for identification by solid colors as shown in table III. The limits for all colors, except light blue and light orange, shall be in accordance with MIL-STD-104, class 1. The limits for light blue and light orange shall be in accordance with MIL-STD-104, class 2.

Source: https://assist.dla.mil -- Downloaded: 2016-11-25T22:28Z
Check the source to verify that this is the current version before use.

3.4.2.3 Cable bundle jacket. The cable bundle jacket (see 6.4.6) dimensions and concentricity requirements shall be as specified in the specification sheet (see 3.1). Since the cable bundle jacket contains buffered fibers, ribbons, or OFCC's the requirements of 3.4.2.1, 3.4.2.2, and 3.4.2.4 shall also apply.

3.4.2.3.1 Cable bundle jacket color coding. Individual cable bundle jackets shall be color-coded as shown in table III. The limits for all colors, except light blue and light orange, shall be in accordance with MIL-STD-104, class 1. The limits for light blue and light orange shall be in accordance with MIL-STD-104, class 2. In addition the applicable color coding requirements for individual OFCC's, ribbons, and buffered fibers in 3.4.2.2.1, 3.4.2.4.1, and 3.4.2.1.1, respectively shall also apply.

3.4.2.4 Optical fiber ribbon. The dimensional requirements and the number of fibers per ribbon for the optical fiber ribbons shall be as specified (see 3.1). A ribbon shall consist of a linear array of nominally contiguous fibers which are held between the adhesive faces of two pressure sensitive tapes. The ribbons shall have no crossovers, defective fibers or splices.

3.4.2.4.1 Ribbon fiber color coding. Each fiber in a ribbon shall be color-coded for identification by colors as shown in table III. The limits for all colors, except light blue and light orange, shall be accordance with MIL-STD-104, class 1. The limits for light blue and light orange shall be in accordance with MIL-STD-104, class 2.

3.4.2.4.2 Ribbon color coding. Individual ribbons shall be color-coded for identification by solid colors as shown in table III. The limits for all colors, except light blue and light orange, shall be in accordance with MIL-STD-104, class 1. The limits for light blue and light orange shall be in accordance with MIL-STD-104, class 2.

3.4.2.5 Binders. The dimensional requirements and the number of fibers, buffered fibers, or OFCC's for each binder shall be as specified (see 3.1).

3.4.2.5.1 Binder color coding. Individual binders shall be color-coded for identification by solid colors as shown in table III. The limits for all colors, except light blue and light orange, shall be in accordance with MIL-STD-104, class 1. The limits for light blue and light orange shall be in accordance with MIL-STD-104, class 2.

3.4.3 Cable and cable core component jackets (see 6.4.8 and 6.4.9). The cable jacket shall provide environmental and physical protection to the enclosed cable components. The cable jacket shall be applied concentrically to maintain circularity in the completed cable. The applicable jackets shall conform with dimensions and dimensional tolerances as specified (see 3.1). The jackets shall be easily removable without damage to other cable component members as specified in 3.5.2.19. The jackets shall be dry and free from any coating, film, or treatment that would tend to interfere with the bonding to it of encapsulating or molding materials used in splicing and terminating. All jackets shall be free of pinholes, blowouts, and bumps (see 4.7.1.2). There shall be no loose, chipped, cracked, or misaligned parts that would adversely affect environmental sealing or degrade optical performance.

Source: https://assist.dla.mil -- Downloaded: 2016-11-25T22:28Z
Check the source to verify that this is the current version before use.

3.4.3.1 Cable and cable core component jacket colors. Unless otherwise specified (see 3.1), the color of the overall cable jacket shall be black. The individual OFCC jackets and cable bundle jackets shall be separately color-coded as specified in 3.4.2.2.1 and 3.4.2.3.1, respectively. The OFCC, binder, and the buffered fiber inside shall be color matched. The ribbon fibers and ribbons shall be color-coded as specified in 3.4.2.4.1 and 3.4.2.4.2, respectively.

3.4.4 Fillers. Fillers may be used to provide firmness, roundness, and watertightness of finished cables. Fillers shall be made of electrically nonconducting material meeting the applicable requirements of 3.5. Filler material shall be of a consistency so as to not induce attenuation (see 6.4.1) during the cabling process and shall have physical properties so as to prevent changes in optical parameters when the cable is subjected to the physical and environmental tests specified (see 3.1). The fillers shall be removable in accordance with 3.5.2.19. Unless otherwise specified (see 3.1), all internal cable component surfaces, including fillers, shall be treated to ensure a water-blocked cable.

3.4.5 Strength and central members. The strength members shall consist of peripheral layers of nonelectrically conducting materials as specified (see 3.1). If a central member is specified (see 3.1), the central member shall be electrically nonconductive.

3.4.6 Cabling. Optical fibers shall be cabled as specified (see 3.1). The length of lay shall be that required to meet the minimum specified bend radius, flexing, and twist-bending requirements. Cables shall contain no splices of optical fibers. Strength members, fillers, and central members may contain splices. Splices in the strength members, fillers, and central members shall be dimensionally indistinguishable within the manufacturer's tolerances from the unspliced components. The splice strength shall be not less than the strength of the unspliced material.

3.4.6.1 Cable physical dimensions (see 4.7.2.1 and 4.7.2.2). The physical dimensions of the finished cable shall be as specified (see 3.1).

3.4.6.2 Concentricity (see 4.7.2.3). The concentricity of the finished cable, OFCC, buffered fiber(s), and cable bundle(s), shall be as specified (see 3.1). Unless otherwise specified (see 3.1), the concentricity shall be not less than 0.65, and shall apply to jackets and underlying jackets.

3.4.6.3 Cable and cable core component mass per unit length (see 4.7.2.4). The mass per unit length of a fully assembled cable and cable core components shall be not greater than the values as specified (see 3.1).

3.4.6.4 Cable continuous length. The cable continuous length shall be as specified (see 3.1 and 6.2).

Source: https://assist.dla.mil -- Downloaded: 2016-11-25T22:28Z
Check the source to verify that this is the current version before use.

3.5 Performance requirements.

3.5.1 Optical properties.

3.5.1.1 Attenuation.

3.5.1.1.1 Maximum attenuation rate (see 4.7.3.1.1). The maximum attenuation rate (see 6.4.2) of each fiber in the finished cable shall be as specified (see 3.1).

3.5.1.1.2 Change in attenuation rate (see 4.7.3.1.1). The change in attenuation rate of each fiber in the finished cable from the pre-cabled fiber values shall be as specified in table IV.

TABLE IV. Allowable change in attenuation rate (dB/km) for finished cables.

Fiber type	Change in attenuation rate (dB/km)
MM	≤ 1.0
SU, SS, SF	≤ 0.5

3.5.1.1.3 Change in optical transmittance (see 4.7.3.1.2). Unless otherwise specified (see 3.1), the change in optical transmittance of each fiber caused by exposure of the finished cable to each of the required mechanical and environmental tests, respectively, shall be not greater than the values specified in 3.5.2 and 3.5.3.

3.5.1.2 Crosstalk (see 4.7.3.2). The far-end crosstalk (see 6.4.10) between two adjacent fibers shall be not greater than minus 40 decibels (dB) below the active fiber optical output level.

3.5.1.3 Cut-off wavelength (see 4.7.3.3). (For types SU, SS, and SF fibers only). The cabled cut-off wavelength (see 6.4.11) of each optical fiber shall be as follows:

Type SU - 1.13 to 1.27 μm
Type SS - 1.13 to 1.33 μm

The cabled cut-off wavelength of type SF fiber shall be as specified (see 3.1).

3.5.2 Mechanical properties. The finished cable shall perform according to all requirements as specified (see 3.1). The maximum allowable change in optical transmittance given in table V shall apply for mechanical requirements (see 4.7.3.1.2).

Source: https://assist.dla.mil -- Downloaded: 2016-11-25T22:28Z
Check the source to verify that this is the current version before use.

TABLE V. Allowable change in optical transmittance (dB) for mechanical requirements.

Fiber type	Change in optical transmittance (dB)
SU, SS, and SF	≤ 0.2
MM	≤ 0.5

3.5.2.1 Tensile loading (see 4.7.4.1). The finished cable and cable core components shall show no evidence of cracking, splitting, or breaking. The change in optical transmittance of each fiber shall be not greater than the values given in table V.

3.5.2.2 Dynamic bend (see 4.7.4.2). The finished cable shall reveal no jacket softening, surface damage (cracking, splitting, or other defect to permit jacket penetration), or identification marking impairment. The change in optical transmittance of each fiber shall be not greater than the values given in table V.

3.5.2.3 Cyclic flexing (see 4.7.4.3). The finished cable shall reveal no jacket softening, surface damage (cracking, splitting, or other defect to permit jacket penetration), or identification marking impairment. The change in optical transmittance of each fiber shall be not greater than the values given in table V.

3.5.2.4 Torsion (see 4.7.4.4). Each cable core component shall reveal no physical damage. The change in optical transmittance of each fiber shall be not greater than the values given in table V.

3.5.2.5 Flexure (see 4.7.4.5). Each cable core component shall reveal no physical damage.

3.5.2.6 Twist bending (see 4.7.4.6). The finished cable shall reveal no jacket softening, surface damage (cracking, splitting, or other defect to permit jacket penetration), or identification marking impairment. The change in optical transmittance of each fiber shall be not greater than the values given in table V.

3.5.2.7 Crush (see 4.7.4.7). The finished cable shall reveal no jacket softening, surface damage (cracking, splitting, or other defect to permit jacket penetration), or identification marking impairment. Cable exterior deformation shall not be considered as damage or failure. The change in optical transmittance of each fiber shall be not greater than the values given in table V. The optical crosstalk shall meet the requirements of 3.5.1.2.

3.5.2.8 Radial compression (see 4.7.4.8). The finished cable shall reveal no cracking, splitting, or other defects to permit jacket penetration. The change in optical transmittance of each fiber shall be not greater than 0.1 dB.

Source: https://assist.dla.mil -- Downloaded: 2016-11-25T22:28Z
Check the source to verify that this is the current version before use.

3.5.2.9 Impact (see 4.7.4.9). The finished cable shall reveal no jacket softening or surface damage (cracking, splitting, or other defect to permit jacket penetration). The change in optical transmittance of each fiber shall be not greater than the values given in table V.

3.5.2.10 Corner bend (see 4.7.4.10). The finished cable and cable core components shall reveal no material softening, surface damage (cracking, splitting, or other defect to permit penetration), or identification marking impairment. The change in optical transmittance of each fiber shall be not greater than the values given in table V.

3.5.2.11 Pressure cycling (see 4.7.4.11). The change in optical transmittance of each fiber shall be not greater than the values given in table V.

3.5.2.12 Hydrostatic pressure (see 4.7.4.12). Unless otherwise specified (see 3.1), the finished cable shall permit no axial flow of water and shall have 5 millimeters (mm) or less slippage of cable internal parts.

3.5.2.13 Dripping (see 4.7.4.13). For cables with fillers, the lower end of a vertically suspended finished cable end shall reveal no evidence of globule formation nor shall any dripping be observed on the drip collector.

3.5.2.14 Waterblocking (see 4.7.4.14). Unless otherwise specified (see 3.1), the maximum water leakage of the finished cable shall be less than 32.8 cubic centimeters (cm^3).

3.5.2.15 Cable jacket tear strength (see 4.7.4.15). The minimum jacket tear strength shall be 60 newtons per centimeter (N/cm) of jacket thickness.

3.5.2.16 Cable jacket materials tensile strength and elongation (see 4.7.4.16). The tensile strength of the cable jacket materials shall be not less than 900 N/cm^2. The percent elongation shall be not greater than 180 percent. The cable jacket shall reveal no physical damage.

3.5.2.17 Cable abrasion resistance (see 4.7.4.17). The cable shall withstand 100 cycles of scraping abrasion and 100 cycles of cable-to-cable abrasion.

3.5.2.18 Cable shrinkage (see 4.7.4.18). The total shrinkage of the length of finished cable (and buffered fiber, OFCC, cable bundle jacket and ribbon, as specified (see 3.1)) shall be no greater than 6.35 mm.

3.5.2.19 Cable element removability (see 4.7.4.19). Finished cable jacket, OFCC jacket, cable bundle jacket, optical fiber buffer, and ribbon tape shall be easily and cleanly removable by mechanical means without damage to the cable or optical fibers or both. No surface scratches or defects to the optical fiber shall be visible under 100X magnification after the fiber buffer material has been removed. The cable waterblock or filler materials, if applicable, shall be flexible and easily removable from any part to which it is in contact through the use of fingers only. The presence of occasional particles or slivers of filler

Source: https://assist.dla.mil -- Downloaded: 2016-11-25T22:28Z
Check the source to verify that this is the current version before use.

residue will be acceptable, provided that these can be removed by light brushing with the fingers or with a dry cloth. Filler material which leaves residue that is removable only by vigorous wiping or through the use of solvents shall not be acceptable.

3.5.2.20 Durability of identification marking and color coding (see 4.7.4.20). The identification marking, when applied to the outer surface of the finished cable, and color coding, shall withstand 500 cycles.

3.5.2.21 Ribbon delamination (see 4.7.4.21). The ribbon shall not delaminate.

3.5.3 Environmental properties. The finished cable shall perform according to all requirements specified (see 3.1), during the specified operating environments and after the specified storage environment. The operating temperature range and storage temperature range shall be as shown in table VI, as specified (see 3.1). The maximum allowable change in optical transmittance given in table VII shall apply for environmental requirements (see 4.7.3.1.2).

TABLE VI. Temperature ranges (ambient).

Range	Operating (°C)	Storage (°C)
1	-54 to +65	-62 to +71
2	-28 to +65	-62 to +71
3	-54 to +85	-62 to +85
4	-28 to +85	-62 to +85

TABLE VII. Allowable change in optical transmittance (dB) for environmental requirements.

Fiber type	Change in optical transmittance (dB)
SU, SS, AND SF	≤ 0.3
MM	≤ 0.5

Source: https://assist.dla.mil -- Downloaded: 2016-11-25T22:28Z
Check the source to verify that this is the current version before use.

3.5.3.1 Thermal shock (see 4.7.5.1). The finished cable shall reveal no jacket softening, surface damage (cracking, splitting, or other defect to permit jacket penetration), or identification marking impairment. The cable outer diameter shall not deviate more than 10 percent. Unless otherwise specified (see 3.1), the change in optical transmittance of each fiber shall be not greater than the values given in table VII.

3.5.3.2 Temperature-humidity cycling (see 4.7.5.2). The finished cable shall reveal no jacket softening, surface damage (cracking, splitting, or other defect to permit jacket penetration), or identification marking impairment. The cable outer diameter shall not deviate more than 10 percent. The tensile loading shall be not less than 75 percent of the test load specified in 4.7.4.1. Unless otherwise specified (see 3.1), the change in optical transmittance of each fiber shall be not greater than the values given in table VII.

3.5.3.3 Gas flame (see 4.7.5.3). Unless otherwise specified (see 3.1), the change in optical transmittance shall be not greater than the values given in table VII.

3.5.3.4 Weathering (see 4.7.5.4). After the 1,000 hours exposure, the cable jacket shall show no evidence of softening, gumminess or surface damage (cracking, splitting, or other defect to permit jacket penetration). Unless otherwise specified (see 3.1), the change in optical transmittance of each fiber shall be not greater than the values given in table VII. The cable jacket tensile strength and elongation shall be 75 percent of the initial value.

3.5.3.5 Fluid immersion (see 4.7.5.5). The tensile strength and elongation retention properties of the cable jacket material shall be not less than 50 percent of the initial values. The finished cable shall reveal no cracks, splits, gumminess, or voids in the cable jacket. The outer diameter of the finished cable shall not deviate more than 10 percent (thickness).

3.5.3.6 Water absorption (see 4.7.5.6). The maximum water absorption of the finished cable or a sample of the external cable jacket material shall be not greater than 3.9 milligrams per square centimeter (mg/cm^2) of exposed cable surface area.

3.5.3.7 Salt spray (see 4.7.5.7). The finished cable shall show no evidence of cracking, blistering, pitting, or pulling.

3.5.3.8 Accelerated aging (see 4.7.5.8). The jacket shall show no evidence of softening, gumminess or surface damage (cracking, splitting, or other defect to permit jacket penetration). The jacket tensile strength and elongation shall be not less than 75 percent of the initial value. The cable outer diameter shall not deviate more than 10 percent. Unless otherwise specified (see 3.1), the change in optical transmittance of each fiber shall be not greater than the values given in table VII.

3.5.3.9 Jacket self adhesion or blocking (see 4.7.5.9). The finished cable shall reveal no areas of localized adhesion between contacting cable surfaces or the metal storage spool, or areas that are of a more severe nature than the "mild" condition.

Source: https://assist.dla.mil -- Downloaded: 2016-11-25T22:28Z
Check the source to verify that this is the current version before use.

3.5.3.10 Ultraviolet radiation (see 4.7.5.10). The finished cable shall reveal no evidence of surface damage (cracking, splitting, or other defect to permit jacket penetration). Unless otherwise specified (see 3.1), the change in optical transmittance of each fiber shall be not greater than 0.1 dB.

3.5.3.11 Oxygen pressure exposure (see 4.7.5.11). The finished cable shall reveal no evidence of surface damage (cracking, splitting, or other defect to permit jacket penetration).

3.5.3.12 Vibration (see 4.7.5.12). The finished cable shall reveal no physical damage to the cable. Unless otherwise specified (see 3.1), the change in optical transmittance of each fiber shall be not greater than the values given in table VII.

3.5.3.13 Shock (see 4.7.5.13). The finished cable shall reveal no physical damage to the cable. Unless otherwise specified (see 3.1), the change in optical transmittance of each fiber shall be not greater than the values given in table VII.

3.5.4 Chemical properties.

3.5.4.1 Acid gas generation (see 4.7.6.1). The acid gas generation, expressed as acid equivalent, shall be not greater than 2.0 percent of the weight of the sample.

3.5.4.2 Halogen content (see 4.7.6.2). The total halogen content of the cable shall be not greater than 2.0 percent by weight.

3.5.4.3 Smoke generation and flame propagation (see 4.7.6.3). The peak optical density and the average optical density of smoke produced shall be not greater than 0.5 and 0.15, respectively. In addition, the flame spread-time product at the 10 minute point shall be not greater than 27.5 meters-minute when calculated in accordance with ASTM E 84. Cables that do not meet the requirement for optical density shall have a maximum specific optical density (D_m) of 225 under flaming combustion.

3.5.4.4 Toxicity index (see 4.7.6.4). The toxicity index shall not exceed 5.0.

3.5.4.5 Fungus resistance (see 4.7.6.5). All materials used in the construction of cables shall meet the requirements of MIL-STD-454, requirement 4. Materials not identified in MIL-STD-454, requirement 4 as fungus inert shall meet grade I classification of MIL-STD-810, method 508.

3.6 Identification marking. Unless otherwise specified (see 3.1), the finished cable shall be identified by a marking applied to the outer surface of the cable or visible through the outer surface. The identification marking shall consist of the following, at intervals of 0.25 to 1.5 meters, measured from the beginning of one complete marking to the beginning of the succeeding complete marking:

Source: https://assist.dla.mil -- Downloaded: 2016-11-25T22:28Z
Check the source to verify that this is the current version before use.

(a) Specification sheet part number.
(b) Manufacturer's code designation.
(c) The words "Fiber Optic Cable."
(d) Date code (4 digit - week, year).
(e) When specified (see 6.2), meter markings shall be included.

The identification marking shall be permanent and legible in accordance with the marking requirements of MIL-STD-1285. Identification marking shall be applied with the vertical axis of the printed characters lengthwise of the cable when the normal diameter of the finished cable is 1.25 mm or smaller. The vertical axis of the printed characters may be either crosswise or lengthwise of the cable when the normal diameter of the cable exceeds 1.25 mm. All characters shall be legible.

3.7 Workmanship. Cables shall be dimensionally uniform. As a minimum, cables shall conform to the following:

(a) Outer jacket shall be free of cuts, burnt areas, abrasions, holes, roughened areas, bulges, thin spots, wrinkles, and discontinuities.
(b) Inner layers shall be free of cuts, holes, bulges, thin spots, and discontinuities.
(c) Strength members shall be uniformly laid with no discontinuities.
(d) Fillers and water sealant shall be uniformly distributed throughout the cable body.

4. QUALITY ASSURANCE PROVISIONS

4.1 Responsibility for inspection. Unless otherwise specified in the contract or purchase order, the contractor is responsible for the performance of all inspection requirements (examinations and tests) as specified herein. Except as otherwise specified in the contract or purchase order, the contractor may use his own or any other facilities suitable for the performance of the inspection requirements specified herein, unless disapproved by the Government. The Government reserves the right to perform any of the inspections set forth in the specification where such inspections are deemed necessary to ensure supplies and services conform to prescribed requirements.

4.1.1 Responsibility for compliance. All items shall meet all requirements of sections 3 and 5. The inspections set forth in this specification shall become a part of the contractor's overall inspection system or quality program. The absence of any inspection requirements in the specification shall not relieve the contractor of the responsibility of ensuring that all products or supplies submitted to the Government for acceptance comply with all requirements of the contract. Sampling inspection, as part of manufacturing operations, is an acceptable practice to ascertain conformance to requirements, however, this does not authorize submission of known defective material, either indicated or actual, nor does it commit the Government to accept defective material.

4.1.2 Product assurance program. A product assurance program shall be established and maintained in accordance with DOD-STD-347.

Source: https://assist.dla.mil -- Downloaded: 2016-11-25T22:28Z
Check the source to verify that this is the current version before use.

4.2 Classification of inspection. The inspection requirements specified herein are classified as follows:

(a) First article inspection (see 4.5).
(b) Quality conformance inspection (see 4.6).

4.2.1 Toxicological product formulations. The contractor shall have the toxicological product formulations and associated information available for review by the contracting activity to evaluate the safety of the material for the proposed use.

4.3 Inspection conditions. Unless otherwise specified herein, all inspections shall be performed in accordance with the environmental test conditions specified in the applicable portions of EIA-455.

4.4 Materials inspection. Materials inspection shall consist of those tests as specified in the applicable specification sheets (see 6.3).

4.5 First article inspection. First article inspection shall consist of all the tests listed in table VIII and as specified (see 3.1 and 6.3).

TABLE VIII. First article inspection.

Inspection	Requirement paragraph	Test method paragraph	Sample length
Specimen group I			
Visual and mechanical	3.3, 3.4 3.6, 3.7	4.7.1.2	3 units, 1 km each 1/
Attenuation	3.5.1.1	4.7.3.1	2/
Cut-off wavelength	3.5.1.3	4.7.3.3	2 meters per sample
Specimen group II			
Acid gas generation	3.5.4.1	4.7.6.1	1 unit (see 4.7.6.1)
Halogen content	3.5.4.2	4.7.6.2	1 unit (see 4.7.6.2)
Smoke generation and flame propagation	3.5.4.3	4.7.6.3	1 unit (see 4.7.6.3)
Toxicity index	3.5.4.4	4.7.6.4	1 unit (see 4.7.6.4)
Fungus resistance	3.5.4.5	4.7.6.5	1 unit, 2 meters

See footnotes at end of table.

Source: https://assist.dla.mil -- Downloaded: 2016-11-25T22:28Z
Check the source to verify that this is the current version before use.

TABLE VIII. First article inspection - continued.

Inspection	Requirement paragraph	Test method paragraph	Sample length
Specimen group III			
Thermal shock	3.5.3.1	4.7.5.1	1 unit, 300 meters
Temperature-humidity cycling	3.5.3.2	4.7.5.2	3/
Accelerated aging	3.5.3.8	4.7.5.8	3/
Gas flame	3.5.3.3	4.7.5.3	1 unit, 10 meters
Weathering	3.5.3.4	4.7.5.4	1 unit, 10 meters
Fluid immersion	3.5.3.5	4.7.5.5.1	8 units (see 4.7.4.16)
		4.7.5.5.2	1 unit, 2 meters
Water absorption	3.5.3.6	4.7.5.6	1 unit, (see 4.7.5.6)
Salt spray	3.5.3.7	4.7.5.7	1 unit, (see 4.7.5.7)
Jacket self adhesion or blocking	3.5.3.9	4.7.5.9	1 unit, 20 meters
Ultraviolet radiation	3.5.3.10	4.7.5.10	1 unit, 10 meters
Oxygen pressure exposure	3.5.3.11	4.7.5.11	1 unit, 1 meter
Vibration	3.5.3.12	4.7.5.12	1 unit, 300 meters

See footnotes at end of table.

Source: https://assist.dla.mil -- Downloaded: 2016-11-25T22:28Z
Check the source to verify that this is the current version before use.

TABLE VIII. First article inspection - continued.

Inspection	Requirement paragraph	Test method paragraph	Sample length
Shock	3.5.3.13	4.7.5.13	4/
Specimen group IV			
Tensile loading	3.5.2.1	4.7.4.1	1 unit, 150 meters
Dynamic bend	3.5.2.2	4.7.4.2	5/
Twist bending	3.5.2.6	4.7.4.6	1 unit, 10 meters 5/
Waterblocking	3.5.2.14	4.7.4.14	1 unit, 10 meters 5/
Cyclic flexing	3.5.2.3	4.7.4.3	1 unit, 10 meters
Crush	3.5.2.7	4.7.4.7	1 unit, 150 meters
Radial compression	3.5.2.8	4.7.4.8	1 unit, 10 meters
Impact	3.5.2.9	4.7.4.9	1 unit, 10 meters
Corner bend	3.5.2.10	4.7.4.10	1 unit, 10 meters
Pressure cycling	3.5.2.11	4.7.4.11	1 unit, 30 meters
Hydrostatic pressure	3.5.2.12	4.7.4.12	1 unit, 1 meters
Dripping	3.5.2.13	4.7.4.13	1 unit, 0.3 meters

See footnotes at end of table.

Source: https://assist.dla.mil -- Downloaded: 2016-11-25T22:28Z
Check the source to verify that this is the current version before use.

TABLE VIII. First article inspection - continued.

Inspection	Requirement paragraph	Test method paragraph	Sample length
Jacket tear strength	3.5.2.15	4.7.4.15	1 unit, (see 4.7.4.15)
Jacket material tensile strength and elongation	3.5.2.16	4.7.4.16	1 unit (see 4.7.4.16)
Cable abrasion resistance	3.5.2.17	4.7.4.17	1 unit, (see 4.7.4.17)
Shrinkage	3.5.2.18	4.7.4.18	1 unit, 0.3 meters
Cable element removability	3.5.2.19	4.7.4.19	1 unit, 1 meter
Durability of markings	3.5.2.20	4.7.4.20	1 unit, 5 meters
Ribbon delamination	3.5.2.21	4.7.4.21	1 unit, 0.3 meters
Specimen group V			
Torsion	3.5.2.4	4.7.4.4	1 unit, 10 meters
Flexure	3.5.2.5	4.7.4.5	1 unit, 10 meters
Tensile loading	3.5.2.1	4.7.4.1	1 unit, 150 meters

1/ A 10-meter specimen shall be used from each 1-km length.
2/ The same 1-km samples shall be used as in visual and mechanical inspection.
3/ The same sample shall be used as in thermal shock inspection.
4/ The same sample shall be used as in vibration inspection.
5/ The same sample shall be used as in tensile loading inspection.

4.5.1 First article sample. A finished cable sample shall be submitted for each cable construction for which first article approval is desired (see 4.5.1). The sample submitted shall be three 1-km lengths.

Source: https://assist.dla.mil -- Downloaded: 2016-11-25T22:28Z
Check the source to verify that this is the current version before use.

4.5.2 Inspection routine. The sample shall be subjected to the first article inspection specified in the applicable specification sheets in the order shown. All first article samples shall be classified as specimen group I and subjected to the inspection for that group. Specimens shall then be cut from each group I specimen in lengths at least as long as identified herein and in the applicable specification sheets. These new test specimens shall be arranged into specimen groups II through IV inclusive, and subjected to the tests identified for those groups.

4.5.3 Failures. One or more failures shall be sufficient cause for refusal to grant first article approval.

4.6 Quality conformance inspection. Quality conformance inspection shall consist of the groups A (table IX), B (table X), and C (table XI) examinations in 4.6.1, 4.6.2, 4.6.3 and as specified (see 3.1, 6.3 and appendix B).

4.6.1 Group A inspection. Group A inspections shall follow the order shown in table X.

TABLE IX. Quality conformance inspection - group A.

Inspection	Requirement paragraph	Test method paragraph	Test length
Visual and mechanical	3.3, 3.4, 3.6. 3.7	4.7.1.2	1 km 1/
Attenuation	3.5.1.1	4.7.3.1	2/

1/ A 10-meter specimen shall be used from each unit.
2/ The same 1-km units shall be used as in visual and mechanical inspection.

4.6.2 Group B inspection. Group B inspection shall consist of the inspections specified in table X. Group B inspections shall be made on units that have passed group A inspection.

TABLE X. Quality conformance inspection - group B.

Inspection	Requirement paragraph	Test method paragraph	Test length
Thermal shock	3.5.3.1	4.7.5.1	300 meters
Dynamic bend	3.5.2.2	4.7.4.2	1/

1/ The same units shall be used as in the thermal shock inspection.

Source: https://assist.dla.mil -- Downloaded: 2016-11-25T22:28Z
Check the source to verify that this is the current version before use.

4.6.3 Group C inspections. Group C inspections shall consist of the inspections in table XI. Group C inspections shall have satisfactorily completed all group A and group B inspections. Specimens for group C inspections shall be obtained from the lengths specified (see 3.1).

TABLE XI. Quality conformance inspection - group C.

Inspection	Requirement paragraph	Test method paragraph	Test length
Cut-off wavelength	3.5.1.3	4.7.3.3	2 meters per sample
Smoke generation and flame propagation	3.5.4.3	4.7.6.3	(see 4.7.6.3)
Gas flame	3.5.3.3	4.7.5.3	10 meters
Weathering	3.5.3.4	4.7.5.4	10 meters
Fluid immersion	3.5.3.5	4.7.5.5.1	(see 4.7.4.16)
		4.7.5.5.2	2 meters
Water absorption	3.5.3.6	4.7.5.6	(see 4.7.5.6)
Accelerated aging	3.5.3.8	4.7.5.8	300 meters
Jacket self-adhesion or blocking	3.5.3.9	4.7.5.9	20 meters
Oxygen pressure exposure	3.5.3.11	4.7.5.11	1 meter
Temperature-humidity cycling	3.5.3.2	4.7.5.2	300 meters

Source: https://assist.dla.mil -- Downloaded: 2016-11-25T22:28Z
Check the source to verify that this is the current version before use.

TABLE XI. Quality conformance inspection - group C - continued.

Inspection	Requirement paragraph	Test method paragraph	Test length
Vibration	3.5.3.12	4.7.5.12	1/
Shock	3.5.3.13	4.7.5.13	1/
Twist bending	3.5.2.6	4.7.4.6	10 meters
Waterblocking	3.5.2.14	4.7.4.14	10 meters
Cyclic flexing	3.5.2.3	4.7.4.3	10 meters
Torsion	3.5.2.4	4.7.4.4	10 meters
Flexure	3.5.2.5	4.7.4.5	10 meters
Crush	3.5.2.7	4.7.4.7	150 meters
Radial compression	3.5.2.8	4.7.4.8	10 meters
Impact	3.5.2.9	4.7.4.9	10 meters
Corner bend	3.5.2.10	4.7.4.10	10 meters
Pressure cycling	3.5.2.11	4.7.4.11	30 meters
Hydrostatic pressure	3.5.2.12	4.7.4.12	1 meter
Dripping	3.5.2.13	4.7.4.13	0.3 meter

1/ The same units shall be used as in the temperature-humidity inspection.

Source: https://assist.dla.mil -- Downloaded: 2016-11-25T22:28Z
Check the source to verify that this is the current version before use.

TABLE XI. Quality conformance inspection - group C - continued.

Inspection	Requirement paragraph	Test method paragraph	Test length
Jacket tear strength	3.5.2.15	4.7.4.15	(see 4.7.4.15)
Jacket material tensile strength and elongation	3.5.2.16	4.7.4.16	(see 4.7.4.16)
Cable abrasion resistance	3.5.2.17	4.7.4.17	(see 4.7.4.17)
Shrinkage	3.5.2.18	4.7.4.18	0.3 meter
Cable element removability	3.5.2.19	4.7.4.19	1 meter
Durability of markings	3.5.2.20	4.7.4.20	5 meters
Ribbon delamination	3.5.2.21	4.7.4.21	0.3 meters
Tensile loading	3.5.2.1	4.7.4.1	150 meters

4.6.3.1 Disposition of group C inspection specimens. Specimens subjected to group C inspection shall not be delivered.

4.7 Methods of inspection.

4.7.1 General testing practice.

4.7.1.1 Equivalent test methods. The use of equivalent test methods is allowed (see 3.1 and 6.2).

4.7.1.2 Visual and mechanical examinations (see 3.4, 3.6, 3.7). Visual and mechanical examinations shall be performed in accordance with EIA-455-13 to verify that the construction, physical characteristics, dimensions, marking, and workmanship are in accordance with the applicable requirements. Visual examination shall be accomplished using 10X magnification. Visual inspection for the color of the cable and the color of the cable core components may be accomplished without magnification.

Source: https://assist.dla.mil -- Downloaded: 2016-11-25T22:28Z
Check the source to verify that this is the current version before use.

4.7.2 Construction inspections.

4.7.2.1 Cable and cable core component dimensions (see 3.4.3.1). Buffered fiber, OFCC, cable bundle, ribbon, and the finished cable dimensions shall be measured in accordance with FED-STD-228, method 1018.

4.7.2.2 Finished cable diameter (see 3.4.6.1). The diameter of finished cable shall be computed from the circumference measurement determined in accordance with FED-STD-228, method 1441, or equivalent (see 4.7.1.1).

4.7.2.3 Concentricity (see 3.4.6.2). The concentricity of the buffer, OFCC jacket, cable bundle jacket, and finished cable jacket shall be determined by locating and recording the minimum and maximum wall thickness of the same cross section. The ratio of the minimum wall thickness to the maximum wall thickness is defined as the concentricity.

4.7.2.4 Finished cable mass (see 3.4.6.3). The mass of 1 km of fiber optic cable shall be determined in accordance with FED-STD-228, method 8311.

4.7.3 Optical properties inspections. Unless otherwise specified (see 3.1), the optical requirements specified herein shall be met at the center wavelength of 1.310 μm with a plus or minus 0.020 μm tolerance.

4.7.3.1 Attenuation.

4.7.3.1.1 Attenuation rate (see 3.5.1.1.1 and 3.5.1.1.2). The multimode fiber attenuation rate shall be measured in accordance with EIA-455-46. For type MM fibers, the source shall be noncoherent. Light launch conditions used during the attenuation rate measurements shall be made in accordance with EIA-455-50 and table XII. The attenuation rate of each individual type SU, SS, and SF fibers shall be measured in accordance with EIA-455-78.

TABLE XII. Light launch conditions for attenuation rate tests.

Fiber type	Launch condition
SU, SS, SF	30-mm diameter mandrel
MM	70/100 restricted, or 70/70 restricted (see 6.5.17 and 6.5.18)

Any optical power detection method may be used if the method is sufficiently sensitive to measure the differential optical power levels as specified in the individual mechanical and environmental requirements of section 3 herein, and if the method provides repeatable readings (less than 3 percent variation).

Source: https://assist.dla.mil -- Downloaded: 2016-11-25T22:28Z
Check the source to verify that this is the current version before use.

4.7.3.1.2 Change in optical transmittance (see 3.5.1.1.3). The change in optical transmittance of each fiber shall be measured in accordance with EIA-455-20, or equivalent (see 4.7.1.1) using a monitor fiber, taken from the same sample as the fiber under test. For type MM fiber, the source used shall be noncoherent. The launch conditions specified in 4.7.3.1.1 shall be used. Any optical power detection method may be used if it is sensitive enough to measure the differential optical power levels as specified by the individual environmental and mechanical requirements of sections 3.5.2 and 3.5.3 and if it provides repeatable readings (less than 3 percent variation). The radiation source shall have a center wavelength of 1.310 $\pm$ 0.020 μm. A pre-test optical power measurement shall be made and then the specimen shall undergo inspection testing. Unless otherwise specified (see 3.1), power measurements shall be made during the inspection test and after completion of the test at a period identified in the individual tests. All optical power measurements shall be referenced to the pre-test value and the change in decibels calculated.

4.7.3.2 Crosstalk (see 3.5.1.2). Cable specimens shall be tested for crosstalk in accordance with EIA-455-42, with the exception that the source shall be 60 dB above the noise floor of the detection system. When applicable, the crosstalk shall be determined between two selected adjacent fibers in a multi-fiber cable, using one fiber as the actively transmitting element, and measuring the far-end optical power output of the other fiber in the cable specimen. The center wavelength shall be 1.310 $\pm$ 0.020 μm, and the light launch conditions shall be as specified in 4.7.3.1.1.

4.7.3.3 Cut-off wavelength (see 3.5.1.3). The cut-off wavelength of single-mode fiber shall be determined using a straight 2-meter length of cable with 1-meter lengths containing 76 mm diameter loops on either end, in accordance with the appendix of this specification.

4.7.4 Mechanical tests. Unless otherwise specified (see 3.1), for mechanical tests, the specimen length shall be as given in individual inspections. The change in optical transmittance shall be measured in accordance with 4.7.3.1.2. Change in optical transmittance for mechanical tests shall be measured for all fibers in the cable or a total of 12 fibers, whichever is less. In large count fiber cables, at least one fiber per ribbon, cable bundle, or binder shall be monitored. Visual examination, where required, shall be conducted in accordance with 4.7.1.

4.7.4.1 Tensile loading (see 3.5.2.1). The tensile loading test of the finished cable and cable core components shall be conducted at ambient temperature in accordance with EIA-455-33. A 45 newtons preload shall be placed on each cable segment. The cable shall be loaded to 2500 newtons for each centimeter of cable outer diameter in four equal increments. The cable core components shall be loaded as specified (see 3.1). Each load increment shall take one minute to complete and be held for at least 1 minute. The change in optical transmittance shall be measured during and after the test. At the completion of this test, the cable jacket shall be visually examined in accordance with 4.7.1.2.

Source: https://assist.dla.mil -- Downloaded: 2016-11-25T22:28Z
Check the source to verify that this is the current version before use.

4.7.4.2 Dynamic bend (see 3.5.2.2). The finished cable shall be pulled 90 degrees over a sheave whose outside diameter is eight times the cable specimen outer diameter, rounded to the next higher centimeter. The cable shall be pulled at a rate of 9 meters per minute (m/min), with a minimum tensile load of 875 newtons for each centimeter of cable outer diameter. The cable core components shall be pulled and loaded as specified (see 3.1). Specimen length shall be 150 meters. Apparatus shall be used to permit pulling the entire specimen length over the sheave. Tensile load shall not be applied by friction devices in direct contact with the cable. Friction applied to the supply reel or spool is an acceptable technique. The change in optical transmittance shall be measured during and after the test. At the completion of the test, the cable jacket shall be visually examined in accordance with 4.7.1.2.

4.7.4.3 Cyclic flexing (see 3.5.2.3). A 10-meter length of finished cable shall be tested at 30 cycles per minute over a sheave whose outer diameter is eight times the cable outer diameter, rounded to the next higher cm. The cycling flexing test shall be performed in accordance with EIA-455-104. The test sample shall be conditioned at the test temperature before conducting each test for a duration not less than 1 hour. The change in optical transmittance shall be measured during and after the test. After completion of the test, the specimen shall be visually examined in accordance with 4.7.1.2. The test shall be conducted at the conditions listed below:

500 cycles at plus 25 ± 2°C
100 cycles at minus 28 ± 2°C

4.7.4.4 Torsion (see 3.5.2.4). The cable core components shall be tested in accordance with EIA-455-63. The test conditions shall be as specified (see 3.1). The change in optical transmittance shall be measured during and after the test.

4.7.4.5 Flexure (see 3.5.2.5). The cable core components shall be tested in accordance with EIA-455-65, with the exception that the test specimen is the cable core component. Unless otherwise specified (see 3.1), the test temperature shall be the minimum operating temperature.

4.7.4.6 Twist bending (see 3.5.2.6). A 10-meter length of cable shall be tested at 30 cycles per minute over a sheave whose outside diameter is eight times the cable outer diameter, rounded to the next higher centimeter. Twist bending shall be accomplished in accordance with EIA-455-91. Unless otherwise specified (see 3.1), the test load shall be 100 newtons. The test sample shall be conditioned at the test temperature before conducting each test for a duration not less than 1 hour. The change in optical transmittance shall be measured during and after the test. After the tests, the specimen shall be visually examined in accordance with 4.7.1.2. The test shall be conducted at the conditions listed below:

500 cycles at plus 25 ± 2°C
100 cycles at minus 28 ± 2°C

Source: https://assist.dla.mil -- Downloaded: 2016-11-25T22:28Z
Check the source to verify that this is the current version before use.

4.7.4.7 Crush (see 3.5.2.7). Compressive loading testing shall be accomplished in accordance with EIA-455-41, for the finished cable. The minimum length shall be 150 meters. Unless otherwise specified (see 3.1), the following special test conditions shall apply to the following tests:

a. The compressive load exposure shall be not less than 2000 N/cm of cable outer diameter, held for 3 minutes, and released.

b. The compressive loading rate shall be not less than 2000 N/min.

c. The change in optical transmittance shall be measured in accordance with 4.7.3.1.2 while the specimen is under load and after load removal. Visual inspection of the specimen shall be made under 10X magnification after load removal.

d. A break in any fiber caused by this test shall be a failure of the cable.

e. Repeat a through d for a total of five separate points on the cable. The force shall be applied at five separate points on the cable.

f. Optical crosstalk shall be monitored in accordance with 4.7.3.2.

4.7.4.8 Radial compression (see 3.5.2.8). The intent of this test is to determine the optical response of the finished cable to the radial compressive forces that are applied to the cable when it is installed in multicable transits. A 10-meter cable specimen shall be fitted into three multicable transits of appropriate size in accordance with DOD-STD-2003. A radial force shall be applied to the cable within the multicable transits by installing the cable in accordance with the approved assembly drawing for the appropriate multicable transit. The ends of the cable shall be routed to the appropriate optical measuring apparatus and the optical power measured before and after installation. Cable exterior deformation shall not be considered as damage or cable failure. The change in optical transmittance shall be measured during and after the test.

4.7.4.9 Impact (see 3.5.2.9). A 10-meter length cable specimen shall be tested in accordance with EIA-455-25. The specimen shall be conditioned at the test temperature before conducting each test for a duration not less than 1 hour. The change in optical transmittance shall be monitored during and after testing. At the completion of the tests, the cable jacket shall be visually examined in accordance with 4.7.1.2. The test shall be conducted in the order and at the conditions listed below:

50 impacts at plus 25 ± 2°C
20 impacts at minus 28 ± 2°C
20 impacts at plus 65 ± 2°C

Source: https://assist.dla.mil -- Downloaded: 2016-11-25T22:28Z
Check the source to verify that this is the current version before use.

4.7.4.10 Corner bend (see 3.5.2.10). Corner bend test shall be as specified in 4.7.4.10.1 and 4.7.4.10.2.

4.7.4.10.1 Test apparatus. A schematic of the test apparatus is shown on figure 1. Specimen length shall be 10 meters. The testing apparatus shall consist of a rigid surface having a 90-degree corner whose radius is 2.5 times the cable outer diameter, rounded to the next centimeter (for cable only) and 1.3 cm for cable core components. A clamp or other equivalent means shall prevent the specimen from sliding over the surface during test performance. Another clamping device shall be provided to apply a tensile force to the specimen.

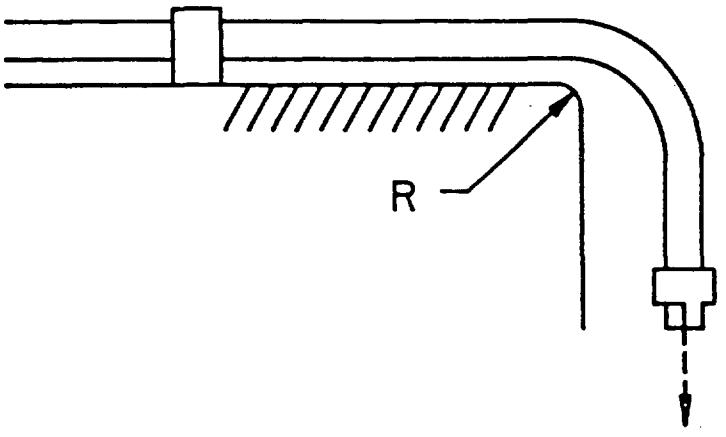

SH 13232023

FIGURE 1. Corner bend test setup.

4.7.4.10.2 Testing procedure. The test cable specimen shall be secured to the testing surface, and a force of 500 N/cm of cable outer diameter or 500 newtons, whichever is lower, shall be applied, as shown, to the specimen for one minute. For cable components, the force shall be as specified (see 3.1). Visual inspection of the specimen shall be made after load removal using 10X magnification. The change in optical transmittance shall be measured after 1 minute of loading and after unloading.

4.7.4.11 Pressure cycling (see 3.5.2.11). A 30-meter length cable specimen shall be installed in a water pressure chamber with both ends brought out approximately 1 meter through stuffing tubes conforming to MIL-S-24235 and MIL-S-24235/2 or to Drawing 9000-S6202-73899. The protruding ends of the specimen shall be prepared for attenuation testing. The specimen within the chamber shall be subjected to 24 pressure cycles. During each cycle, the gauge pressure of the chamber shall be raised to 7.0 MPa and reduced to zero. For each cycle, the high pressure shall be held for 30 minutes and the zero pressure shall be held for 30 minutes. The change in optical transmittance shall be measured continuously throughout the test.

Source: https://assist.dla.mil -- Downloaded: 2016-11-25T22:28Z
Check the source to verify that this is the current version before use.

4.7.4.12 Hydrostatic pressure (see 3.5.2.12). When specified (see 3.1), a fully-assembled 1-meter length cable specimen shall be tested in accordance with the procedure specified herein. One end of the specimen shall be fitted into the appropriate size of stuffing tubes in accordance with MIL-S-24235 and MIL-S-24235/2, or Drawing 9000-S6202-73899. Water pressure of 7.0 MPa shall be applied to the stuffing tube end of the specimen for 6 hours. Water leakage through the specimen and slippage of the cable internal parts shall not exceed the values specified.

4.7.4.13 Dripping (see 3.5.2.13).

4.7.4.13.1 Specimen. The specimen shall consist of a 30-cm length of completed cable.

4.7.4.13.2 Procedure. The drip test shall be performed in accordance with FED-STD-228, method 5141. Unless otherwise specified (see 3.1), the specimen shall be suspended vertically in an oven for a period of 6 hours at an oven temperature of 150 ± 3°C.

4.7.4.14 Waterblocking (see 3.5.2.14). A specimen shall consist of a 10-meter length of completed cable that has been subjected to dynamic bend and twist bend tests (see 4.7.4.2 and 4.7.4.6). One end of the specimen shall be placed in a terminal fitting that will allow water pressure to be applied directly to the exposed cross-sectional area at the end of the cable. The ends of the cable shall be inspected prior to testing to ensure that cable jacket materials and debris resulting from preparation of the specimen do not act as an unnatural seal against the flow of water during the test. Exposure of the sides of the cable to the water shall be kept to a minimum, and the fitting shall not exert radial compression against the cable. The sealer used for the packing and in the terminal fitting shall be a metal alloy having a minimum melting point of 88°C. The specimen shall be subjected to a water pressure of 0.102 MPa for a period of 6 hours.

4.7.4.15 Cable jacket tear strength (see 3.5.2.15). The tear strength of the finished cable shall be determined in accordance with FED-STD-228, method 3111.

4.7.4.16 Jacket material tensile strength and elongation (see 3.5.2.16). Unless otherwise specified (see 3.1), specimens of the jacket material shall be tested in accordance with FED-STD-228, methods 3021 and 3031, with 2.5-cm bend marks, 2.5-cm jaw separation, and a rate of travel of 25 cm/minute. The thickness of the specimen shall be measured using any micrometer.

4.7.4.17 Cable abrasion resistance (see 3.5.2.17).

4.7.4.17.1 Scraping abrasion resistance.

4.7.4.17.1.1 Specimen. Test specimens of the cable jacket, cable bundle jacket, and the OFCC jacket material shall be prepared by extruding the material onto a 16 AWG (solid) conductor. The total diameter of this insulated wire shall be 0.582 ± 0.0025 cm. The specimen shall be manufactured using process conditions as close as possible to those used to produce the jacket.

Source: https://assist.dla.mil -- Downloaded: 2016-11-25T22:28Z
Check the source to verify that this is the current version before use.

4.7.4.17.1.2 Test apparatus. The tester shall hold the test specimen firmly clamped in a horizontal position with the outer longitudinal surface of the specimen fully exposed. The tester shall rub an edge (such as a needle) repeatedly over the upper surface of the specimen in such position that the longitudinal axis of the edge and the specimen are at right angles to each other with edge and outer surface of specimen in contact. A weight added to a fixture above the rubbing edge shall control the force exerted normal to the surface of the jacket material. A motor-driven, reciprocating cam mechanism shall be used to deliver an accurate number of abrading strokes in a direction parallel to the longitudinal axis of the specimen. The number of cycles shall be measured by a counter. The length of the stroke shall be 5 cm and the frequency of the stroke shall be 30 cycles (60 strokes) per minute. An electrical detection circuit shall stop the counter and machine when the edge contacts the conductor of the sample wire or when the specified number of cycles is attained.

4.7.4.17.1.3 Test procedure. Remove a 2.5 cm-length of jacket from one end of a 1.8-meter specimen. The wire shall be attached to the detection circuit. The specimen shall be clamped in the tester and a mass of 0.7 kg shall be carefully applied by the edge to the surface of the jacket. Five tests shall be performed on each specimen with the specimen being moved forward 20 cm and rotated clockwise 90 degrees along the longitudinal axis between each test. The test shall be discontinued when the edge abrades through the jacket and contacts the conductor or when the specified number of cycles is attained for each of the five tests performed on the specimen.

4.7.4.17.2 Cable-to-cable abrasion.

4.7.4.17.2.1 Preparation. Specimens of cable jacket material shall be prepared in accordance with 4.7.6.18.1.1.

4.7.4.17.2.2 Test apparatus. Cable-to-cable abrasion test apparatus and specimen relationship are shown on figures 2 and 3. The test apparatus shall consist of an electromagnetic transducer (driver) rigidly mounted on a heavy steel frame with the axial motion of the driver in a horizontal plane. The transducer shall drive a rocker arm via a spring steel bar. Mounted on this arm shall be a curved specimen holder upon which is mounted one of the two wire specimens (lower). The curvature of the upper surface of the specimen holder shall be an arc whose center is located at the pivot point of the rocker arm. The second (upper) specimen shall be mounted on the underside of a beam which is fastened to the frame through a thin, flexible nickel titanium alloy strip which shall serve as a hinge and allow the beam to be displaced only in a vertical direction. The beam and the driven specimen holder shall be positioned such that two wire specimens form an included angle of 60 degrees. The lower specimen holder shall be driven, by the transducer, at a rate of 1 Hertz and a peak-to-peak amplitude of 0.4 cm, along the bisector of the included angle. This symmetrical driving arrangement shall produce wear patterns of equal area on both specimens.

Source: https://assist.dla.mil -- Downloaded: 2016-11-25T22:28Z
Check the source to verify that this is the current version before use.

4.7.4.17.2.3 Test procedure. Test specimens shall be mounted as described above. The applied force between the two wire specimens shall be produced by one or more rubber bungees between the beam and the frame. The actual force shall be measured with a force gauge directly in line with the intersection of the two specimens. The force measurement shall be taken when a force just sufficient to separate the two specimens is achieved. The force shall be measured before and after the test, and the results shall be averaged. The average force determined in this manner shall be 10.0 ± 1.0 newtons. The end point of the test shall be when the conductors of both specimens are bared and electrical contact is made between them or when the specified number of cycles is attained for the specimen under test. This contact shall be sensed by a high-speed detection circuit which turns off the oscillator and stops a timer. The number of cycles to failure shall be the elapsed time in minutes multiplied by 60.

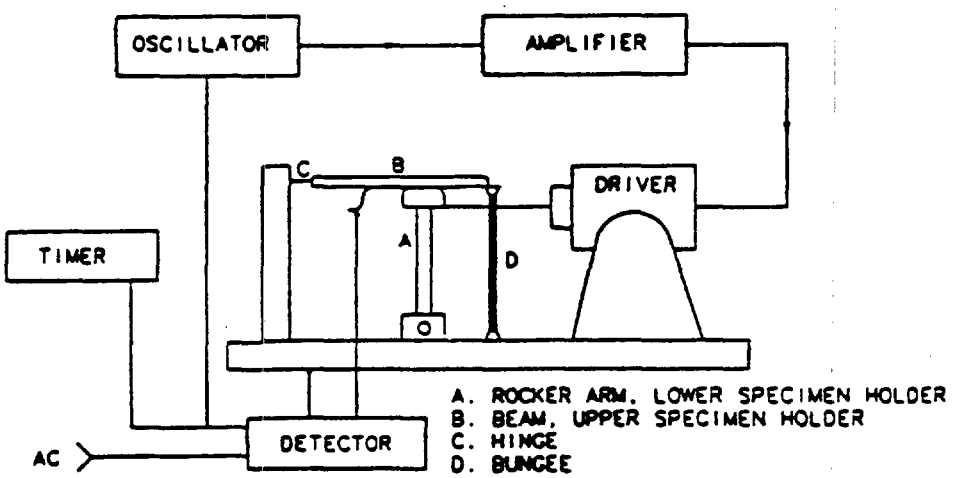

SH 13232024

FIGURE 2. Abrasion resistance test apparatus.

Source: https://assist.dla.mil -- Downloaded: 2016-11-25T22:28Z
Check the source to verify that this is the current version before use.

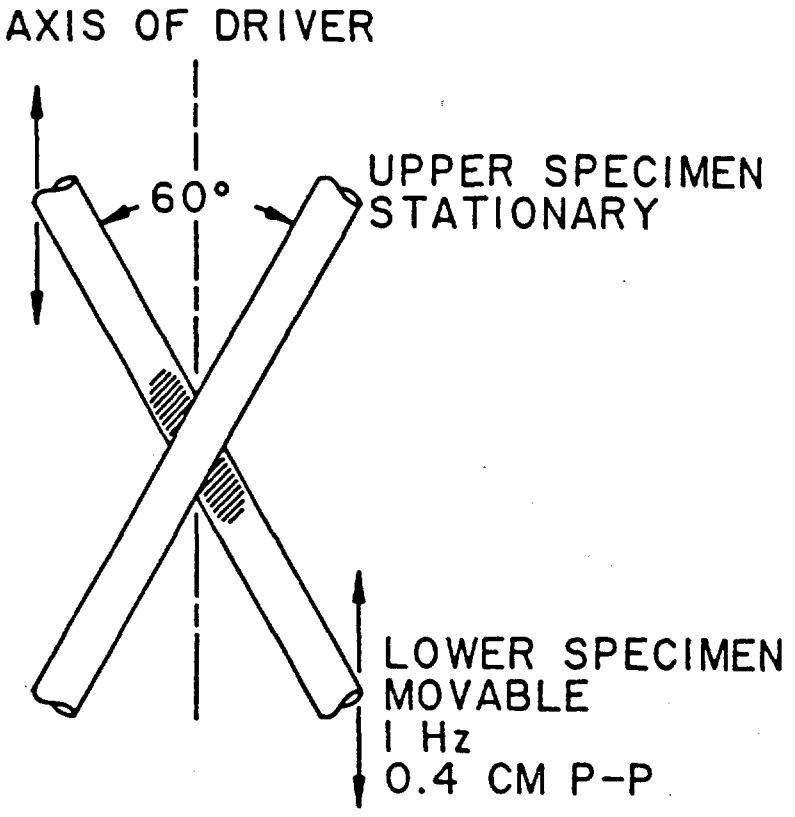

SH 13232025

FIGURE 3. Abrasion resistance specimen relationship.

4.7.4.18 Cable shrinkage (see 3.5.2.18). A 30 cm specimen of cable shall be cut so that all components are flush at both ends. The specimen shall be aged at the annealing temperature of the cable jacket material for 6 hours in an air-circulating oven. At the end of this period, the specimen shall be removed from the oven and allowed to return to room temperature. The length of the specimen shall again be measured and the shrinkage shall be calculated as the difference between the two measurements.

4.7.4.19 Cable element removability (see 3.5.2.19). This test is applicable to the materials used to fill the voids within or between cable bundles, between the optical fiber cable components (OFCC), or between and around fiber ribbons. It is also applicable to filler material used to fill the voids between OFCC inner and outer jackets.

Source: https://assist.dla.mil -- Downloaded: 2016-11-25T22:28Z
Check the source to verify that this is the current version before use.

4.7.4.19.1 Specimens. A specimen shall consist of a length of completed cable approximately 1.0 meter long.

4.7.4.19.2 Procedure. All cable parts external to the cable core, such as cable jacket and strength member, shall be removed from one end of the specimen so as to expose the cable fibers and filler material for a distance of approximately 0.9 meters. Using fingers only (no hand tool), the filler shall be separated from the buffered fibers, OFCC's, cable bundles, or fiber ribbon(s) for their fully exposed length. For cable bundles, approximately 40 cm of jacket shall be removed exposing the buffered fibers and OFCC's, or both. The residual filler material on the buffered fiber or OFCC outer jackets, or both shall be removed using fingers only. For OFCC's, approximately 20 cm of the outer jacket shall be removed exposing the OFCC core. The OFCC strength member shall be pushed back and removed exposing the inner jacket. The residual filler material on the OFCC inner jacket shall be removed using fingers only. For ribbons, approximately 20 cm of the tapes shall be removed from the ribbon and fibers separated. Any residual material left on the fibers from the tapes shall be removed with a dry cotton cloth.

4.7.4.20 Durability of identification markings (see 3.5.2.20).

4.7.4.20.1 Durability testing apparatus. The marking durability tester shall hold a short specimen firmly clamped in a horizontal position with the upper longitudinal surface of the specimen fully exposed. The specimen length shall be 5 meters. The instrument shall rub a small cylindrical steel mandrel (usually a needle), 0.64 mm in diameter, repeatedly over the upper surface of the specimen, in such a position that the longitudinal axis of the mandrel and the specimen are at right angles to each other with cylindrical surfaces in contact. A mass of 150 grams affixed to a jig above the mandrel shall control the thrust exerted normal to the surface of the jacket material. A motor-driven, reciprocating cam mechanism and counter shall be used to deliver an accurate number of abrading strokes in a direction parallel to the axis of the specimen. The length of the stroke shall be 10 cm and the frequency shall be 120 strokes (60 stroking cycles) per minute.

4.7.4.20.2 Durability testing procedure. In performing the test, a specimen shall be mounted in the specimen clamp and the mass shall be applied through the abrading mandrel to the marked surface. The counter is then set at zero and the drive motor started. The test shall continue for 500 cycles. The specimen shall be removed and visually examined in accordance with 4.7.1.2. Failure is defined as an erasure or obliteration to the point of illegibility of any marking contacted during the test exposure.

4.7.4.21 Ribbon delamination (see 3.5.2.21). A 30-cm sample of fiber ribbon shall be exposed to a temperature of 88 $\pm$ 2°C and relative humidity of 95 percent for 72 hours in a forced air oven. After this test exposure, the tape used in the ribbon shall not separate from the fibers.

Source: https://assist.dla.mil -- Downloaded: 2016-11-25T22:28Z
Check the source to verify that this is the current version before use.

4.7.5 Environmental tests. For environmental tests, the specimen lengths are given in the individual inspections. Change in optical transmittance measurements shall be made in accordance with 4.7.3.1.2. Measurements of change in optical transmittance for environmental properties shall be made for all fibers in the cable or a total of 24 fibers, whichever is less. In large count fiber cables, at least two fibers per ribbon, cable bundle, or binder shall be tested. Visual examination of the specimen after exposure, where required, shall be conducted in accordance with 4.7.1.2.

4.7.5.1 Thermal shock (see 3.5.3.1). The finished cable shall be tested in accordance with EIA-455-160, using the storage temperature extremes provided in table VI. The change in optical transmittance shall be measured after the exposure. A 300-meter minimum length of cable shall be used. At the completion of the test, the cable jacket shall be visually examined in accordance with 4.7.1.2.

4.7.5.2 Temperature humidity cycling (see 3.5.3.2). The finished cable shall be tested in accordance with EIA-455-162 for 10 cycles. Temperature extremes used shall be the operating temperature extremes provided in table VI. The change in optical transmittance shall be measured during and after the exposure. A minimum cable length of 300 meters shall be used. Tensile loading shall be determined in accordance with 4.7.6.1. At the completion of the test, the cable jacket shall be visually examined in accordance with 4.7.1.2.

4.7.5.3 Gas flame (see 3.5.3.3). The finished cable shall be tested in accordance with EIA-455-99. A 10-meter length of cable shall be used for the test. The change in optical transmittance shall be measured during and after the exposure.

4.7.5.4 Weathering (see 3.5.3.4). The finished cable shall be tested in accordance with ASTM D 2565, using conditions specified in table XIII. A 10-meter length of cable shall be used. The change in optical transmittance shall be measured after exposure. After the change in optical transmittance measurements are complete, the test sample shall be tested for jacket material tensile strength and elongation in accordance with 4.7.4.16.

Source: https://assist.dla.mil -- Downloaded: 2016-11-25T22:28Z
Check the source to verify that this is the current version before use.

TABLE XIII. Conditions for weathering tests.

Conditions	
Xenon arc lamp borosilicate glass filters irradiance	6500 Watts 1.75 Watts per square meter (W/m^2) at .500 μm
Procedure	
Exposure - arc lamp on	18 hours Black panel temp 50 ± 2°C Relative humidity 50 ± 2 percent (water is sprayed onto the specimen for 18 minutes every 2 hours)
arc lamp off	6 hours Temperature 25 ± 2°C Relative humidity 90 to 95 percent
Total exposure	1000 hours

4.7.5.5 Fluid immersion (see 3.5.3.5).

4.7.5.5.1 Cable jacket material. Unless otherwise specified (see 3.1), specimens of each cable and OFCC jacket material shall be immersed in each of the fluids shown in table XIV for 24 hours at the specified temperature. If the OFCC and the cable jacket material are the same, only cable jacket material shall be tested. Each specimen size, for each fluid, shall be in accordance with 4.7.4.16. The specimen shall then be removed, blotted to remove excess fluid, then suspended in the air at room temperature for not less than 3-1/2 nor more than 4-1/2 hours. The tensile strength and elongation of each specimen shall then be determined in accordance with 4.7.4.16.

4.7.5.5.2 Finished cable. One specimen of finished cable, prepared in accordance with EIA-455-12, shall be immersed in each of the fluids shown in table XIV for 24 hours. A 2-meter length of cable shall be immersed such that the two ends are exposed to the atmosphere. After each 24-hour immersion, the specimen shall be removed, blotted to remove excess fluid, and suspended in air at room temperature for not less than 3.5 hours and not more than 4.5 hours. After the test, the cable shall be tested for diameter change.

Source: https://assist.dla.mil -- Downloaded: 2016-11-25T22:28Z
Check the source to verify that this is the current version before use.

TABLE XIV. Immersion test fluids.

Fluids	Specification	Test temperature (°C)
Fuel Oil	MIL-F-16884	33 - 37
Turbine fuel (JP-5)	MIL-T-5624	20 - 25
Isopropyl alcohol	TT-I-735	20 - 25
Hydraulic fluids	MIL-H-5606	48 - 50
Lubricating oils	MIL-L-17331 MIL-L-23699	73 - 77
Coolant 1/	-	20 - 25
Seawater	-	20 - 25

1/ Monsanto Coolanol 25 or equivalent

4.7.5.6 Water absorption (see 3.5.3.6). Water absorption shall be determined using the gravimetric method of ASTM D 470 with a water temperature of 71 ± 1°C, for a continuous 3-day period. The exposed surface area of the finished cable or cable jacket specimen shall be not less than 5 cm^2 and not greater than 10 cm^2.

4.7.5.7 Salt spray (see 3.5.3.7). Specimens 2.0 meters in length in a horizontal position shall be tested in accordance with EIA-455-16. The exposure time shall be 96 hours at 35°C.

4.7.5.8 Accelerated aging (see 3.5.3.8). A 300-meter length cable specimen shall be conditioned in accordance with FED-STD-228, method 4031. Unless otherwise specified (see 3.1), the testing temperature and duration shall be 100°C and 240 hours. The change in optical transmittance shall be measured after the exposure. Tensile loading shall be determined in accordance with 4.7.6.1. After the completion of the test, the cable jacket shall be visually examined in accordance with 4.7.1.2. After testing a tensile load not less than 75 percent of the test load specified shall be applied (see 4.7.4.1).

4.7.5.9 Jacket self-adhesion or blocking (see 3.5.3.9). Blocking characteristics shall be tested using a 20-meter sample in accordance with EIA-455-84. This cable specimen shall be conditioned at 71 ± 2°C for a period of 48 hours prior to testing for blocking. After the exposure, the specimen shall be visually examined in accordance with 4.7.1.2.

Source: https://assist.dla.mil -- Downloaded: 2016-11-25T22:28Z
Check the source to verify that this is the current version before use.

4.7.5.10 Ultraviolet radiation (see 3.5.3.10). A 10-meter length cable specimen shall be subjected to the test of MIL-STD-810, method 505, procedure II. After exposure, the specimen shall be visually examined in accordance with 4.7.1.2. The change in optical transmittance shall be measured after exposure.

4.7.5.11 Oxygen pressure exposure (see 3.5.3.11). A 1-meter cable specimen shall be tested to oxygen pressure aging by suspending the specimen in a pressure chamber in a 100 percent oxygen atmosphere at 2.1 ± 0.07 MPa, at 80°C for a period of 168 hours. The pressure chamber temperature shall be controlled to within plus or minus 1°C, temperature and pressure shall be automatically recorded during the entire period. At the completion of the period, the chamber pressure shall be reduced to atmospheric pressure at a uniform rate over a 5-minute period. Visual examination of the specimen shall be in accordance with 4.7.1.2.

4.7.5.12 Vibration (see 3.5.3.12). A 300-meter minimum length of cable shall be used for this test. The specimen shall be tested in accordance with MIL-STD-167-1, type I. Not less than 1 meter of the test specimen shall be mounted to simulate shipboard installation in a cable tray (see DOD-STD-2003, section 4). After completion of the test, the cable shall be visually examined in accordance with 4.7.1.2. The change in optical transmittance shall be monitored during and after exposure using equipment having a time resolution of 1 microsecond (μs) or better.

4.7.5.13 Shock (see 3.5.3.13). A 300 meter minimum length of cable shall be used for this test. The specimen shall be subjected to grade A, type A, class I shocks as specified by MIL-S-901. Not less than 1 meter of the test sample shall be mounted to simulate shipboard installation in a cable tray (see DOD-STD-2003, section 4). After completion of the test, the cable shall be visually examined in accordance with 4.7.1.2. The change in optical transmittance shall be monitored during and after exposure using equipment having a time resolution of 1 μs or better.

4.7.6 Chemical properties inspections.

4.7.6.1 Acid gas generation (see 3.5.4.1). The total emission of any soluble acids (pH less than 3) shall be determined as follows. Refer to figure 4. A weighed specimen of the finished cable, approximately 2.5 cm long, shall be placed in a silica boat which shall be put into the center of a silica tube, 25.4 to 50.8 cm long with 3.7 to 15.3 cm of internal diameter. The silica tube shall be placed in a tube furnace. An air supply of a rate of 1 liter per minute (l/min), plus or minus 5 percent (derived from a blower or compressed air cylinder), shall be passed through the silica tube and then through four absorber flasks each containing 150 milliliters (ml) of de-ionized water. The temperature of the tube and sample shall be raised to 800 ± 10°C over a period of approximately 40 minutes and then held at this temperature for an additional 40 minutes. During the heating period any gasses produced shall be carried over into the absorber flasks by the air flow. On completion of the heating cycle, the fluids in the absorber flasks shall be titrated against 0.1 normal sodium hydroxide solution using Congo Red as an indicator. The total titer indicates the total soluble acids. 1.0 ml of 0.1 normal sodium hydroxide is equivalent to 3.65 milligram (mg) of acid, expressed as acid equivalent.

Source: https://assist.dla.mil -- Downloaded: 2016-11-25T22:28Z
Check the source to verify that this is the current version before use.

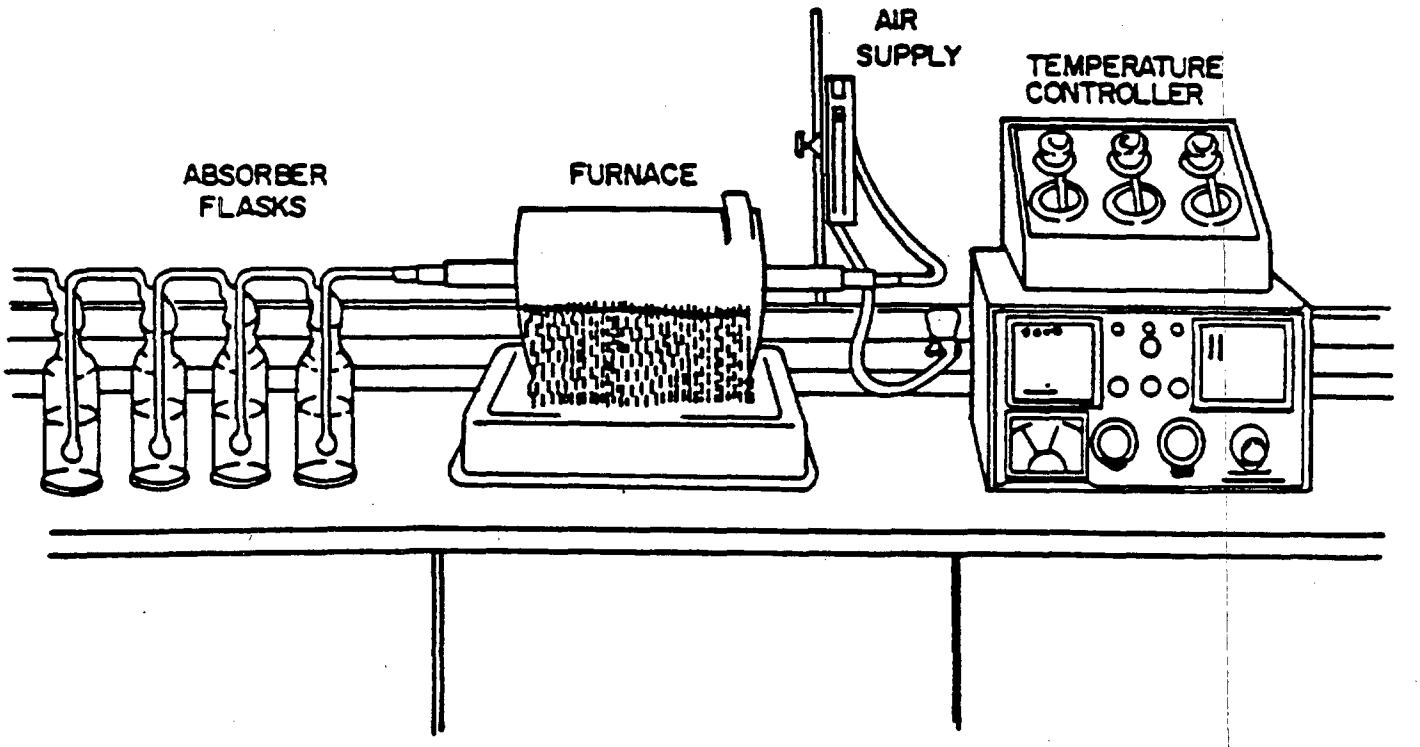

SH 13232026

FIGURE 4. Acid gas generation, test apparatus.

4.7.6.2 Halogen content (see 3.5.4.2). To determine the total halogen content, the cable specimen shall be tested as follows:

a. Fluorine - Approximately 1 gram of combustible finished cable shall be combusted in an oxygen flask to convert fluorine to fluoride. Fluoride shall be determined by ion selective electrode technique (Orion EA 940 Ion Analyzer, or equal in accordance with ASTM D 3761).

b. Chlorine - Approximately 1 gram of combustible finished cable shall be combusted in an oxygen flask to convert chlorine to chloride. After combustion, the specimen shall be mixed with mercuric thiocyanate and ferric ammonium sulfate to develop a color. The colored solution shall be measured for absorbance at 0.470 μm and compared to a calibration curve to obtain the amount of chloride present in accordance with ASTM D 512, method C).

Source: https://assist.dla.mil -- Downloaded: 2016-11-25T22:28Z
Check the source to verify that this is the current version before use.

c. Bromine - Approximately 1 gram of combustible finished cable shall be combusted in an oxygen flask to convert bromine to bromide. After combustion, the specimen shall be mixed with fluorescein and chloramine T to develop a color. The colored solution shall be measured for absorbance at 0.522 μm and compared to a calibration curve to obtain the amount of bromide present.

d. Iodine - Approximately 1 gram of combustible finished cable shall be combusted in an oxygen flask to convert the iodine to iodide. After combustion, the iodide shall be oxidized with potassium permanganate and acidified with phosphoric acid. Potassium iodide and starch shall be added to develop a color. The colored solution shall be measured for absorbance at 0.575 μm and compared to a calibration curve to obtain the amount of iodide present.

4.7.6.3 Smoke generation and flame propagation (see 3.5.4.3). The smoke generation and flame propagation shall be determined using finished cable specimens in accordance with the Steiner Tunnel Test as described in UL-910. Finished cable specimens that do not pass the Steiner Tunnel Test for smoke generation shall be tested in accordance with ASTM E 662.

4.7.6.4 Toxicity index (see 3.5.4.4). The toxicity index of the finished cable shall be tested in accordance with NES-713. An 8-cm length of cable shall be prepared in the following manner. Coat the ends of the exposed cable core material with a high temperature ceramic cement and allow 72 hours to cure. This capping procedure should eliminate dripping of the core materials during testing. Support the cement caps with a rigid clamping device to hold the caps in place during testing. Position the cable sample above the flame source at a 45 degree angle and apply the flame so that it is centered on the cable sample. The combustion gases shall be chemically analyzed using calorimetric gas reaction tubes.

4.7.6.5 Fungus resistance (see 3.5.4.5). Cables and materials used in the construction of cables that are not identified as fungus inert in MIL-STD-454, requirement 4 shall be tested in accordance with MIL-STD-810, method 508. The cable specimen length shall be 2 meters.

4.7.7 Inspection of packaging. The sampling and inspection of the preservation, packaging, and container marking shall be in accordance with the requirements of MIL-C-12000.

5. PACKAGING

(The packaging requirements specified herein apply only for direct Government acquisition. For the extent of applicability of the packaging requirements of referenced documents listed in section 2, see 6.2).

5.1 Packaging requirements. The requirements for packaging shall be in accordance with the requirements of MIL-C-12000 (see 6.2).

5.2 Reel lengths. Unless otherwise specified (see 6.2), reels shall contain no more than one continuous length of cable.

Source: https://assist.dla.mil -- Downloaded: 2016-11-25T22:28Z
Check the source to verify that this is the current version before use.

6. NOTES

(This section contains information of a general or explanatory nature that may be helpful, but is not mandatory.)

6.1 Intended use. The fiber optic cables covered by this specification are intended for use in any application where their performance characteristics are required. The cables are for installation in naval shipboard systems within the limitations of their specified performance requirements.

6.2 Acquisition requirements. Acquisition documents must specify the following:

a. Title, number, and date of the specification.

b. Issue of DoDISS to be cited in the solicitation, and if required, the specific issue of individual documents referenced (see 2.1.1 and 2.2).

c. Applicable specification sheet number, title, and date.

d. Total quantity of cable required.

e. Minimum acceptable continuous cable length (see 3.4.6.4).

f. Meter marking requirements (see 3.6).

g. Equivalent test methods, if other than as specified (see 4.7.1.1).

h. Level of packaging and packing required (see 5.1).

i. Length of cable per reel (see 5.2).

j. Part number of cable required (see 6.6).

6.3 Consideration of data requirements. The following data requirements should be considered when this specification is applied on a contract. The applicable Data Item Descriptions (DID's) should be reviewed in conjunction with the specific acquisition to ensure that only essential data are requested/provided and that the DID's are tailored to reflect the requirements of the specific acquisition. To ensure correct contractual application of the data requirements, a Contract Data Requirements List (DD Form 1423) must be prepared to obtain the data, except where DoD FAR Supplement 27.475-1 exempts the requirement for a DD Form 1423.

Source: https://assist.dla.mil -- Downloaded: 2016-11-25T22:28Z
Check the source to verify that this is the current version before use.

Reference Paragraph	DID Number	DID Title	Suggested Tailoring
4.5	DI-T-4902	First article inspection report	----
4.6 and appendix B	DI-MISC-80653	Test reports	----

The above DID's were those cleared as of the date of this specification. The current issue of DoD 5010.12-L, Acquisition Management Systems and Data Requirements Control List (AMSDL), must be researched to ensure that only current, cleared DID's are cited on the DD Form 1423.

6.4 First article. When a first article inspection is required, the items should be a first article sample. The first article should consist of three units. The contracting officer should include specific instructions in acquisition documents regarding arrangements for examinations, approval of first article test results and disposition of first articles. Invitations for bids should provide that the Government reserves the right to waive the requirement for samples for first article inspection to those bidders offering a product which has been previously acquired or tested by the Government, and that bidders offering such products, who wish to rely on such production or test, must furnish evidence with the bid that prior Government approval is presently appropriate for the pending contract.

6.5 Definitions. The following definitions of terms in this document are generally accepted by the optical fiber cable manufacturing industries. IEEE-STD-812 and FED-STD-1037 may be used as additional references for definitions of terms related to fiber optics.

6.5.1 Attenuation. Attenuation is the diminution of optical power as light travels along an optical path.

6.5.2 Attenuation rate. Attenuation rate is the diminution of average optical power along a length of optical fiber normalized to what the diminution would be for a standard length (usually 1 km). To be meaningful, the rate of diminution along the sample length must be uniform. For a sample length L and an input power P_i resulting in an output power P_o, the attenuation rate is:

$$\alpha = [10 \log_{10} (P_i / P_o)]/L \quad \text{(dB/km)},$$

where L is measured in kilometers, P_i and P_o are the optical input and output powers over the length L and the attenuation rate is to be a positive value.

6.5.3 Binder. A binder is a string or tape which tie together a number of fibers, buffered fibers, or OFCC's.

6.5.4 Buffered fiber. A buffered fiber is a coated optical fiber augmented with an additional coating or buffer jacket to protect the fiber and render it more visible and manageable.

6.5.5 Cable bundle. A cable bundle is a number of fibers, buffered fibers, ribbons, or OFCC's, grouped together in the cable core within a common protective layer.

Source: https://assist.dla.mil -- Downloaded: 2016-11-25T22:28Z
Check the source to verify that this is the current version before use.

6.5.6 Cable bundle jacket. A cable bundle jacket is the material which forms a protective layer around a bundle of fibers, buffered fibers, ribbons, or OFCC's.

6.5.7 Cladding. Cladding is the dielectric material surrounding the fiber core and whose outer surface is protected by a coating.

6.5.8 Cable core. Cable core is the part of the cable interior to the outermost jacket.

6.5.9 Cable core component. Cable core component is a part of the cable core, such as a buffered fiber, OFCC, cable bundle, ribbon and perhaps other parts.

6.5.10 Crosstalk. Crosstalk is a measure of the optical power picked up by an optical fiber from an adjacent energized fiber. If the optical power at the receiving end of the energized fiber is P_o and the power in the disturbed fiber at the corresponding end is P_d then:

$$\text{Crosstalk}_{(dB)} = 10 \log_{10} (P_d / P_o)$$

Since P_d is always less than P_o , the crosstalk is always negative. The negative sign is commonly ignored.

6.5.11 Cut-off wavelength. Cut-off wavelength, in a single-mode fiber, is the minimum wavelength at which the second order LP_{11} ceases to propagate.

6.5.12 Minimum bend radius. Minimum bend radius is the minimum radius at which a cable may be bent for extended periods of time with no degradation in optical performance.

6.5.13 Multimode fiber. Multimode fiber is an optical fiber that will allow more than one bound mode to propagate.

6.5.14 Optical fiber. An optical fiber is the core, cladding, and coatings applied during the fiber drawing process.

6.5.15 OFCC. An OFCC is a buffered fiber augmented with a concentric layer of strength members and an overall jacket.

6.5.16 Ribbon. A ribbon is optical fibers arrayed side by side and maintained in this lateral position by various means.

6.5.17 70/70 restricted launch. A 70/70 restricted launch is a beam optics launch with a 70 percent spot size and source aperture equal to 70 percent of the fiber numerical aperture.

6.5.18 70/100 restricted launch. A 70/100 restricted launch is a beam optics launch with a 70 percent spot size and source aperture equal to or greater than the fiber numerical aperture.

Source: https://assist.dla.mil -- Downloaded: 2016-11-25T22:28Z
Check the source to verify that this is the current version before use.

6.5.19 Single-mode fiber. Single-mode fiber is an optical fiber in which the radiation of only one bound mode can propagate at the wavelength of interest.

6.6 Material Safety Data Sheets. Contracting officers will identify those activities requiring copies of completed MSDS's. Additional required Government information is contained in FED-STD-313. In order to obtain the MSDS, FAR clause 52.223-3 must be in the contract.

6.7 Part or Identifying Number (PIN). Cables should contain only the following:

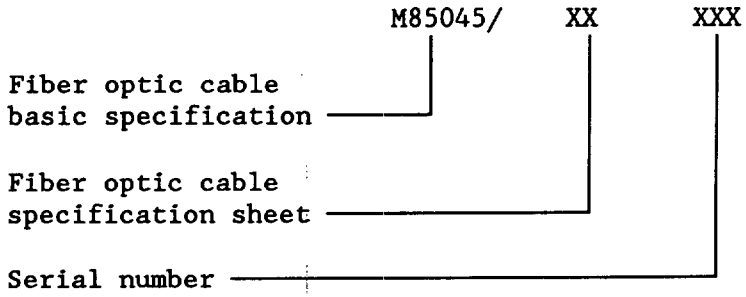

Examples:
M85045/13-001
M85045/14-002

6.8 Part designator. A part designator, if specified (see 3.1), should include classifications (see 1.2) as follows:

1. Fiber optic cable configuration type (see 1.2.1).
2. Optical fiber types (see 1.2.2).
3. Number of optical fibers (see 3.4.1.1).

Example: BSU008.

6.9 Personnel safety. Care should be taken when handling the very fine (small diameter) optical fibers to prevent skin puncture or contact of fiber with the eye area. Also, direct viewing of the optical terminal face of a terminated cable, while it is propagating optical energy, is not recommended unless the radiation is in the visible portion of the optical spectrum, of low power, and needed to perform test examinations not obtainable by other methods.

Source: https://assist.dla.mil -- Downloaded: 2016-11-25T22:28Z
Check the source to verify that this is the current version before use.

6.10 Subject term (key word) listing.

Attenuation
Binder
Buffered fiber
Cable bundle
Cable core component
Dispersion
Fiber core
Fiber optic communications
Fiber optic component
Multimode fiber
Optical fiber
Optical Fiber Cable Component (OFCC)
Optical ribbon
Single-mode fiber

Review activities:
Navy - EC, YD

Preparing activity:
Navy - SH
(Project 6015-N012)

Source: https://assist.dla.mil -- Downloaded: 2016-11-25T22:28Z
Check the source to verify that this is the current version before use.

APPENDIX A

PROCEDURE TO DETERMINE THE CUT-OFF WAVELENGTH OF SINGLE-MODE FIBER CABLE BY TRANSMITTED POWER

10. SCOPE

10.1 Scope. This test method describes a procedure for determining the cut-off wavelength, λ_{cc}, of single-mode fiber cable by observing the wavelength about which the power transmitted through a fiber abruptly changes. The value obtained is affected by the cable length and by bend conditions. The fiber cut-off wavelength, λ_{cf}, measured under the standard length and bend conditions of EIA-455-80 will generally exhibit a larger value than λ_{cc}. For short cables such as pigtails and jumper cables, λ_{cc} may be larger than λ_{cf}. This test procedure compares the transmitted spectral powers from the test fiber cable with that from a multimode reference fiber. This appendix is a mandatory part of this specification.

20. APPLICABLE DOCUMENTS

20.1 Non-Government publications. The following documents form a part of this document to the extent specified herein. Unless otherwise specified, the issues of the documents which are DoD adopted are those listed in the issue of the DoDISS cited in the solicitation. Unless otherwise specified, the issues of documents not listed in the DoDISS are the issues of the documents cited in the solicitation (see 6.2).

ELECTRONIC INDUSTRIES ASSOCIATION (EIA)

455-57 - Optical Fiber End Preparation and Examination.
455-80 - Cut-off Wavelength of Uncabled Single-Mode Fiber By Transmitted Fiber.

(Application for copies should be addressed to the Electronic Industries Association, 2001 Eye Street, NW, Washington DC 20006.)

30. TEST EQUIPMENT

30.1 Light source. A spectrally broad noncoherent light source, such as tungsten-halogen or xenon arc lamp, shall be used. It may be modulated and shall be stable in intensity over a time period sufficient to perform the measurement.

30.2 Monochromator. A specified range of test wavelengths from the source shall be obtained by using a monochromator. The spectral linewidth shall be not greater than 10 nanometers full-width at half-maximum (FWHM) over the scanned wavelength range.

Source: https://assist.dla.mil -- Downloaded: 2016-11-25T22:28Z
Check the source to verify that this is the current version before use.

30.3 Launch optics. Optics, such as a lens system or a multimode fiber, shall be used to overfill both test sample over the full range of test wavelengths. This launch is relatively insensitive to the input endface position of the single-mode fiber, and is sufficient to excite both the fundamental and any higher-order modes in the test sample. If a butt splice is used, means shall be provided to avoid interference effects. Overfilling the multimode reference fiber can produce an undesired ripple in the power transmission spectrum. Care shall be taken to restrict the launch sufficiently to eliminate the ripple effect. One example is EIA-455-50, method B. Another example is a mandrel wrap mode filter with sufficient (approximately 4 dB) insertion loss.

30.4 Cable deployment apparatus. Any special equipment required to deploy the cable shall be as specified (see 3.1).

30.5 Support and positioning apparatus. A means of stably supporting the input and output ends of the test sample for the duration of the test, such as vacuum chucks, shall be used. The fiber ends shall be supported such that they can be repeatedly positioned in the launch and detection optics. A means for supporting the cable ends shall be provided.

30.6 Cladding mode stripper. Cladding mode power shall be removed from the test sample. Under some circumstances, the fiber coating will perform this function; otherwise, methods or devices that extract cladding mode power shall be employed at the input and output ends of the test sample.

30.7 Detection optics. Means shall be used to couple all power emitted from the test sample onto the active region of the detector. As examples, an optical lens system, a butt splice with a multimode fiber pigtail to a detector, or direct coupling may be used.

30.8 Detector and signal detection electronics. A detector which is sensitive over the range of insensitivities encountered shall be used. A typical system might include a photovoltaic-mode Ge or GaInAs photodiode, a current-input preamplifier, with synchronous detection by a lock-in amplifier and optical chopper assembly. Generally, a system includes a computer for data acquisition and analysis.

30.9 Multimode reference fiber. A multimode fiber with a length of 2 to 10 meters shall be supplied. The endfaces shall be prepared as described in EIA-455-57.

40. TEST SPECIMEN

40.1 Test specimen. For this test procedure, the test specimen is defined as a length of single-mode optical fiber in a cable, deployed as specified (see 3.1). If no deployment is specified, the default condition shown on figure 5 shall apply. In this condition, a cable length of 20 meters shall be laid substantially straight. It shall be prepared by exposing 1 meter uncabled fiber lengths at each end. To stimulate the effects of a splice organizer, one loop of 38 mm radius shall be applied to the end of each uncabled fiber length.

Source: https://assist.dla.mil Downloaded: 2016-11-25T22:28Z
Check the source to verify that this is the current version before use.

40.2 Number of cables and fibers. The number of cables and the number of fibers within a given cable to be tested shall be as specified (see 3.1).

40.3 Endfaces. Flat endfaces shall be prepared at the input and output ends of the test sample as described in EIA-455-57.

50. TEST PROCEDURES

50.1 Test procedures. The test procedure shall be as follows:

a. Unless otherwise specified (see 3.1), the cable shall be deployed in the default condition.

b. Care should be taken when setting up the fiber support system and when using a cladding-mode stripper, to avoid any additional single-mode fiber bends having a radius smaller than 140 mm, or as specified (see 3.1).

c. The input and output ends of the cabled fiber shall be aligned to the launch and detection optics. The launch and detection optics are left unchanged as the wavelength range is scanned in increments of 10 nm or less. The wavelength range shall be broad enough to encompass the expected cable cut-off wavelength and, as outlined below, result in a curve similar to that shown on figure 6. The transmitted signal power, $P_s(\lambda)$, is recorded.

d. The test sample is replaced by the multimode reference fiber. The transmitted signal power, $P_m(\lambda)$, is recorded.

e. The test sample is replaced by the multimode reference fiber. The transmitted signal power, $P_m(\lambda)$, is recorded over the same wavelength range and with the same spectral increments as in d above. (Power $P_m(\lambda)$ may be stored in a computer for use in repetitive measurements on different cabled single-mode fibers.)

60. CALCULATIONS

60.1 Spectral transmittance. The spectral transmittance of the test sample referenced to the multimode fiber shall be calculated as follows:

$$A_m(\lambda) = 10 \log_{10} (P_s(\lambda)/P_m(\lambda)) \quad \text{in dB}$$

a. A straight line is fitted to the long wavelength portion of $A_m(\lambda)$ and is displaced upward by 0.1 dB (dashed line on figure 6). The intersection of this displaced line with $A_m(\lambda)$ defines the cable cut-off wavelength λ_{cc}, provided that ΔA_m, as shown on figure 6 is not less than 2 dB. Between measured data points, $A_m(\lambda)$ is defined by linear interpolation.

Source: https://assist.dla.mil -- Downloaded: 2016-11-25T22:28Z
Check the source to verify that this is the current version before use.

b. If $\Delta A_m < 2$ dB, or if it is unobservable, the wavelength scan range shall be broadened, or the single-mode launch conditions shall be enlarged. These adjustments and the test procedure shall be repeated until $\Delta A_m \geq 2$ dB, and until the long wavelength tail is of adequate length to be fit by a straight line.

Source: https://assist.dla.mil -- Downloaded: 2016-11-25T22:28Z
Check the source to verify that this is the current version before use.

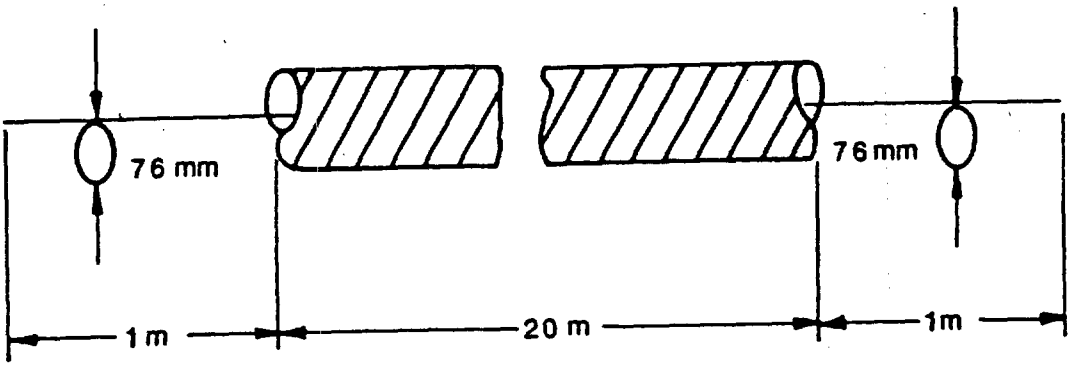

SH 13232027

FIGURE 5. Default condition for cable deployment.

Source: https://assist.dla.mil -- Downloaded: 2016-11-25T22:28Z
Check the source to verify that this is the current version before use.

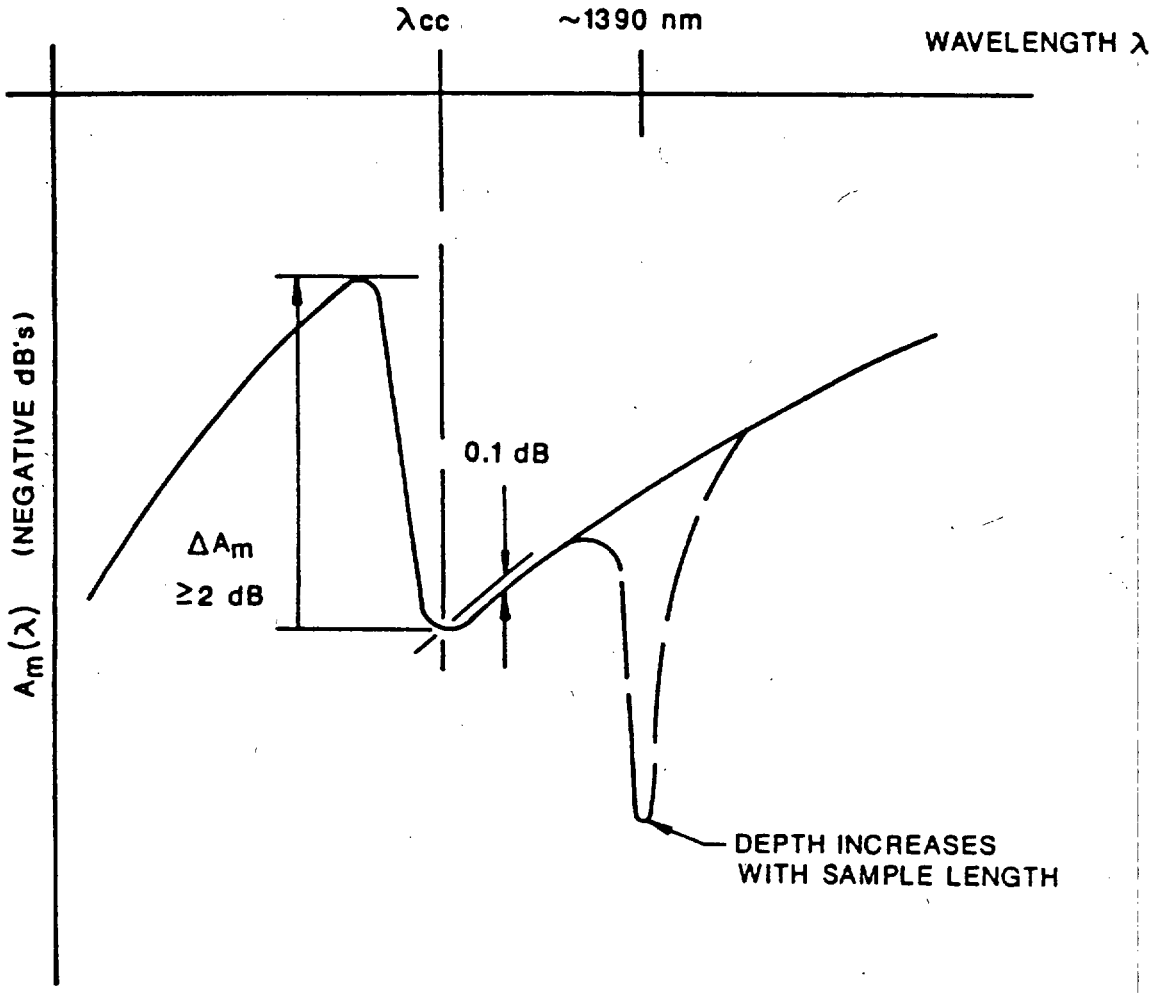

SH 13232028

FIGURE 6. Cable cut-off wavelength determination.

Source: https://assist.dla.mil -- Downloaded: 2016-11-25T22:28Z
Check the source to verify that this is the current version before use.

APPENDIX B

10. SCOPE

10.1 Scope. This appendix covers the technical requirements that should be included on test reports when required by the contract or order. This appendix is mandatory only when data item description DI-MISC-80653 is cited on the DD Form 1423.

20. APPLICABLE DOCUMENTS

This section is not applicable to this appendix.

30. TEST REPORTS

30.1 Test report technical content requirements. When required by the contract or order, test reports shall contain the following information:

(a) Date of test.

(b) Sample identification.

(c) Test procedure number.

(d) The cable cut-off wavelength λ_{cc} obtained.

(e) Test sample, including its length, bend, and deployment conditions.

(f) Light source.

(g) Monochromator (including spectral scanning range, spectral width, and incremental steps).

(h) Launch optics.

(i) Cladding mode-stripper.

(j) Fiber and cable support mechanisms.

(k) Detection optics.

(l) Detection and recording techniques.

(m) Multimode fiber.

(n) Plot of relative spectral transmittance $A_m(\lambda)$.

Source: https://assist.dla.mil -- Downloaded: 2016-11-25T22:28Z
Check the source to verify that this is the current version before use.

STANDARDIZATION DOCUMENT IMPROVEMENT PROPOSAL

(See Instructions – Reverse Side)

1. DOCUMENT NUMBER	2. DOCUMENT TITLE
MIL-C-0085045D(NAVY)	CABLE, FIBER OPTIC, SHIPBOARD (METRIC) GENERAL SPECIFICATION FOR

3a. NAME OF SUBMITTING ORGANIZATION

b. ADDRESS *(Street, City, State, ZIP Code)*

4. TYPE OF ORGANIZATION *(Mark one)*

- ☐ VENDOR
- ☐ USER
- ☐ MANUFACTURER
- ☐ OTHER *(Specify)*: _____

5. PROBLEM AREAS

a. Paragraph Number and Wording:

b. Recommended Wording:

c. Reason/Rationale for Recommendation:

6. REMARKS

7a. NAME OF SUBMITTER *(Last, First, MI)* – Optional

b. WORK TELEPHONE NUMBER *(Include Area Code)* – Optional

c. MAILING ADDRESS *(Street, City, State, ZIP Code)* – Optional

8. DATE OF SUBMISSION *(YYMMDD)*

(TO DETACH THIS FORM, CUT ALONG THIS LINE.)

DD FORM 82 MAR 1426 PREVIOUS EDITION IS OBSOLETE.

Source: https://assist.dla.mil – Downloaded: 2016-11-23T22:28Z
Check the source for the most recent version before use.