INCH-POUND

MIL-C-23269E

4 February 1993

SUPERSEDING
MIL-C-23269D
30 September 1970

MILITARY SPECIFICATION

CAPACITORS, FIXED, GLASS DIELECTRIC,
ESTABLISHED RELIABILITY, GENERAL SPECIFICATION FOR

This specification is approved for use by all Departments and Agencies of the Department of Defense.

1. SCOPE

1.1 Scope. This specification covers the general requirements for established reliability, glass dielectric, fixed capacitors. Capacitors covered by this specification have failure rate (FR) levels established in accordance with MIL-STD-690. The reliability for each level is identified by a symbol in accordance with table I. These FR levels are established at a 90 percent confidence level and maintained at a 10 percent producer's risk and are based on life tests performed with rated voltage applied at 125°C. An acceleration factor of 5:1 has been used to relate life test data obtained at 150 percent of rated voltage at 125°C to rated voltage at 125°C. A part per million (ppm) quality system is used for documenting and reporting the average outgoing quality of capacitors supplied to this specification. Statistical process control (SPC) techniques are required in manufacturing process to minimize variation in production of capacitors supplied to the requirements of this specification.

TABLE I. FR level (established at a 90 percent confidence level).

Symbol	FR level
	Percent/1,000 hour
M	1.0
P	0.1
R	0.01
S	0.001

1.2 Classification. Capacitors covered by this specification are classified by the style, as specified (see 3.1).

Beneficial comments (recommendations, additions, deletions) and any pertinent data which may be of use in improving this document should be addressed to: Defense Electronic Supply Center, ATTN: EMM, 1507 Wilmington Pike, Dayton, OH 45444-5283, by using the Standardization Document Improvement Proposal (DD Form 1426) appearing at the end of this document or by letter.

AMSC N/A

FSC 5910

DISTRIBUTION STATEMENT A. Approved for public release; distribution is unlimited.

Source: https://assist.dla.mil -- Downloaded: 2016-11-16T02:11Z
Check the source to verify that this is the current version before use.

2. APPLICABLE DOCUMENTS

2.1 Government documents.

2.1.1 Specifications, standards, and handbooks. The following specifications, standards, and handbooks form a part of this document to the extent specified herein. Unless otherwise specified, the issues of these documents are those listed in the issue of the Department of Defense Index of Specifications and Standards (DODISS) and supplement thereto, cited in the solicitation (see 6.2).

SPECIFICATIONS

FEDERAL

QQ-S-571 - Solder; Tin Alloy; Tin-Lead Alloy; and Lead Alloy.

MILITARY

MIL-C-39028 - Capacitors, Packaging of.

(See supplement 1 for list of associated specification sheets.)

STANDARDS

MILITARY

MIL-STD-202 - Test Methods for Electronic and Electrical Component Parts.
MIL-STD-690 - Failure Rate Sampling Plans and Procedures.
MIL-STD-790 - Reliability Assurance Program for Electronic Parts Specifications.
MIL-STD-810 - Environmental Test Methods and Engineering Guidelines.
MIL-STD-1276 - Leads for Electronic Component Parts.
MIL-STD-1285 - Marking of Electrical and Electronic Parts.

(Unless otherwise indicated, copies of federal and military specifications, standards, and handbooks are available from the Standardization Documents Order Desk, Building 4D, 700 Robbins Avenue, Philadelphia, PA 19111-5094.)

2.2 Non-Government publications. The following documents form a part of this document to the extent specified herein. Unless otherwise specified, the issues of the documents which are DOD adopted are those listed in the issue of the DODISS cited in the solicitation. Unless otherwise specified, the issues of documents not listed in the DODISS are the issues of the documents cited in the solicitation (see 6.1).

ELECTRONIC INDUSTRIES ASSOCIATION (EIA)

EIA-554 - Assessment of Outgoing Nonconforming Levels in Parts Per Million (PPM).

EIA-557 - Statistical Process Control Systems (SPC).

(Application for copies should be addressed to the Electronic Industries Association, 2001 Eye Street, NW, Washington, DC 20006-1813.)

AMERICAN SOCIETY FOR TESTING AND MATERIALS (ASTM)

ASTM-92 - Standard Test Method for Flash and Fire Points by Cleveland Open Cup.

(Application for copies should be addressed to the American Society for Testing and Materials, 1916 Race Street, Philadelphia, PA 19103.)

(Non-Government standards and other publications are normally available from the organizations that prepare or distribute the documents. These documents also maybe available in or through libraries or other informational services.)

Source: https://assist.dla.mil -- Downloaded: 2016-11-16T02:11Z
Check the source to verify that this is the current version before use.

2.3 Order of precedence. In the event of a conflict between the text of this document and the references cited herein (except for related associated detail specifications, specification sheets, or MS standards), the text of this document takes precedence. Nothing in this document, however, supersedes applicable laws and regulations unless a specific exemption has been obtained.

3. REQUIREMENTS

3.1 Specification sheets. The individual item requirements shall be as specified herein and in accordance with the associated specification sheets. In the event of any conflict between requirements of this specification and the associated specification sheet, the latter shall govern (see 6.1).

3.2 Qualification. Capacitors furnished under this specification shall be products which are qualified for listing on the applicable qualified products list at the time set for opening of bids (see 4.4 and 6.1). Authorized distributors which are approved to MIL-STD-790 distributor requirements by the qualified products list (QPL) manufacturers are listed in the QPL.

3.3 Reliability and quality.

3.3.1 Reliability. Reliability of capacitors furnished under this specification shall be established and maintained in accordance with the procedures and requirements specified in MIL-STD-790 and MIL-STD-690 with details specified in 4.1.2, 4.4.4.1, and 4.5.

3.3.2 Quality.

3.3.2.1 SPC. The contractor shall implement and use SPC techniques in the manufacturing process for parts covered by this specification. The SPC program shall be developed and maintained in accordance with all the requirements of EIA-557. The SPC program shall be documented and maintained as part of the overall reliability assurance program as specified in MIL-STD-790. The implementation of SPC shall be 12 months from the date of this specification. Processes for application of SPC techniques should include but are not limited to:

a. Raw material mixing and blending.

b. Dielectric sheet manufacturing.

c. Termination.

d. Packaging.

3.3.2.2 Quality levels. The quality of lots that have been subjected to and passed the subgroup 1, 100 percent screening inspection of the group A inspection shall be established and maintained in accordance with 4.4.4.2 and EIA-554, method B. Individual ppm defect levels (i.e., ppm-2 and ppm-3) and an overall ppm defect level (i.e., ppm-5) shall be established based on the tests prescribed in the subgroup 2 tests of the group A inspections. The defect level for ppm-2 shall be less than 100 ppm. The implementation of ppm verification shall be 12 months from the date of this specification.

3.3.2.2.1 Noncompliance. The contractor shall notify the qualifying activity when the 100 ppm level is reached or exceeded for ppm-2. The contractor shall provide sufficient information to the qualifying activity documenting the causes of the problem and what corrective action is being taken. Failure to correct this problem shall be the basis for removal of the affected product from the QPL.

3.4 Materials. The materials shall be as specified herein. However, when a definite material is not specified, a material shall be used which will enable the capacitors to meet the performance requirements of this specification. Acceptance or approval of any constituent material shall not be construed as a guaranty of the acceptance of the finished product.

3.4.1 Solder. Solder for electrical connections shall be in accordance with QQ-S-571. In no case shall the solder start to melt at a temperature of less than 200°C.

Source: https://assist.dla.mil -- Downloaded: 2016-11-16T02:11Z
Check the source to verify that this is the current version before use.

3.4.2 Soldering flux. Flux for soldering of electrical connections shall be rosin, rosin and alcohol, or rosin and turpentine. No acid or acid salts shall be used in preparation for or during soldering; however, exception is permitted for preliminary tinning of electrical connections and for tinning or soldering of mechanical joints not used to complete electrical circuits, but in no case shall acid or acid salts be used where they can come in contact with insulating material. Where acid or acid salts are used as permitted herein, they shall be completely neutralized and removed immediately after use. All excess flux and solder shall be removed. Where possible, electrical connections shall be mechanically secure before soldering and electrically continuous after soldering.

3.5 Design and construction. Capacitors shall be of the design, construction, and physical dimensions specified (see 3.1).

3.5.1 Terminals.

3.5.1.1 Lead terminals. Lead terminals shall be C, D, N, or W in accordance with MIL-STD-1276. Final finish is the option of the manufacturer.

3.5.2 Solder dip (retinning leads). Only the manufacturer (or his authorized category B distributor) may solder dip/retin the leads of the product supplied to this specification provided the solder dip process has been approved by the qualifying activity.

3.5.2.1 Qualifying activity approval. Approval of the solder dip process will be based on one of the following options:

a. When the original lead finish qualified was hot solder dip lead finish 52 in accordance with MIL-STD-1276, the manufacturer shall use the same solder dip process for retinning as is used in the original manufacture of the capacitor.

   (NOTE: The 200 microinches maximum thickness requirement is not applicable.)

b. When the lead originally qualified was not hot solder dip lead finish 52 of MIL-STD-1276 as prescribed in 3.5.2.1a, approval for the process to be used for solder dip shall be based on the following procedure:

   (1) Thirty samples of any capacitance value for each style and lead finish shall be subjected to the manufacturer's solder dip process. The capacitors shall then be subjected to all group A, subgroup I post-electric tests, with no defects allowed.

   (2) Ten of the 30 samples shall then be subjected to the solderability test, with no defects allowed.

   (3) The remaining 20 samples shall be subjected to the resistance to soldering heat test, followed by the moisture resistance test (or seal test if the capacitor is hermetically sealed), with no defects allowed.

3.5.2.2 Solder dip/retinning options. If the manufacturer (or his authorized category B distributor) solder dips or retins the leads as a part of normal production, or as a corrective action for solderability test failure, the following shall apply:

a. Following any solder dip or retinning process, the seal, IR, CAP, and DF measurements shall be performed on 100 percent of the lot. The percent defective allowable (PDA) shall be the same as the group A, subgroup 1. Following these tests, the manufacturer shall submit the lot to the group A solderability test.

b. PPM-2 date following solder dip/retinning shall be reported each 6 months. The calculation method shall be in accordance with EIA-554, method B.

3.5.3 Case. Each capacitor shall be enclosed in a glass or epoxy case (see 3.1) which will protect the capacitor element against the entry of contaminants.

Source: https://assist.dla.mil -- Downloaded: 2016-11-16T02:11Z
Check the source to verify that this is the current version before use.

3.5.4 Capacitor element. The capacitor element shall consist of alternate layers of glass dielectric and electrode.

3.5.5 Connections. Electrical connections shall not depend upon the terminals being clamped between a metallic member and an insulating material other than the glass material.

3.6 Seal.

3.6.1 Test I (for transparent cases). When capacitors are tested as specified in 4.7.2.1, there shall be no evidence of dye extending into the active element.

3.6.2 Test II (for opaque cases). When capacitors are tested as specified in 4.7.2.2, the insulation resistance shall be not less than the value specified (see 3.1).

3.7 High voltage stabilization. When capacitors are tested as specified in 4.7.3, there shall be no evidence of damage, arcing, or breakdown.

3.8 Insulation resistance. When measured as specified in 4.7.4, the insulation resistance shall be not less than the value specified (see 3.1).

3.9 Capacitance. When measured as specified in 4.7.5, the capacitance shall be within the applicable tolerance of the nominal value specified (see 3.1).

3.10 Dissipation factor. When measured as specified in 4.7.6, the dissipation factor shall not exceed the value specified (see 3.1).

3.11 Thermal shock. When tested as specified in 4.7.7, there shall be no short-circuiting.

3.12 Quality factor (Q). When measured as specified in 4.7.8, the Q shall be not less than the value shown on figure 1, unless otherwise specified (see 3.1).

3.13 Shock, specified pulse. When capacitors are tested as specified in 4.7.9, there shall be no intermittent contacts of 0.5 millisecond (ms) or greater duration, open- or short-circuiting, or evidence of arcing or mechanical damage.

3.14 Vibration, high frequency. When capacitors are tested as specified in 4.7.10, there shall be no intermittent contacts of 0.5 ms or greater duration, open- or short-circuiting, or evidence of mechanical damage.

3.15 Solderability. When capacitors are tested as specified in 4.7.11, the dipped portion of the terminals shall conform to the solid-wire termination criteria of method 208 of MIL-STD-202.

3.16 Terminal strength. When capacitors are tested as specified in 4.7.12, there shall be no loosening or rupturing of the terminals, and no damage to the terminals or seal.

3.17 Barometric pressure. When capacitors are tested as specified in 4.7.13, there shall be no evidence of damage, arcing, or breakdown.

3.18 Temperature coefficient and capacitance drift. When measured as specified in 4.7.14, the temperature coefficient and capacitance drift shall as specified (see 3.1).

3.19 Salt spray (corrosion). When capacitors are tested as specified in 4.7.15, there shall be no harmful corrosion or mechanical damage, and the marking shall remain legible.

NOTE: Harmful corrosion shall be construed as being any type of corrosion which in any way interferes with the mechanical or electrical performance of the capacitor.

Source: https://assist.dla.mil -- Downloaded: 2016-11-16T02:11Z
Check the source to verify that this is the current version before use.

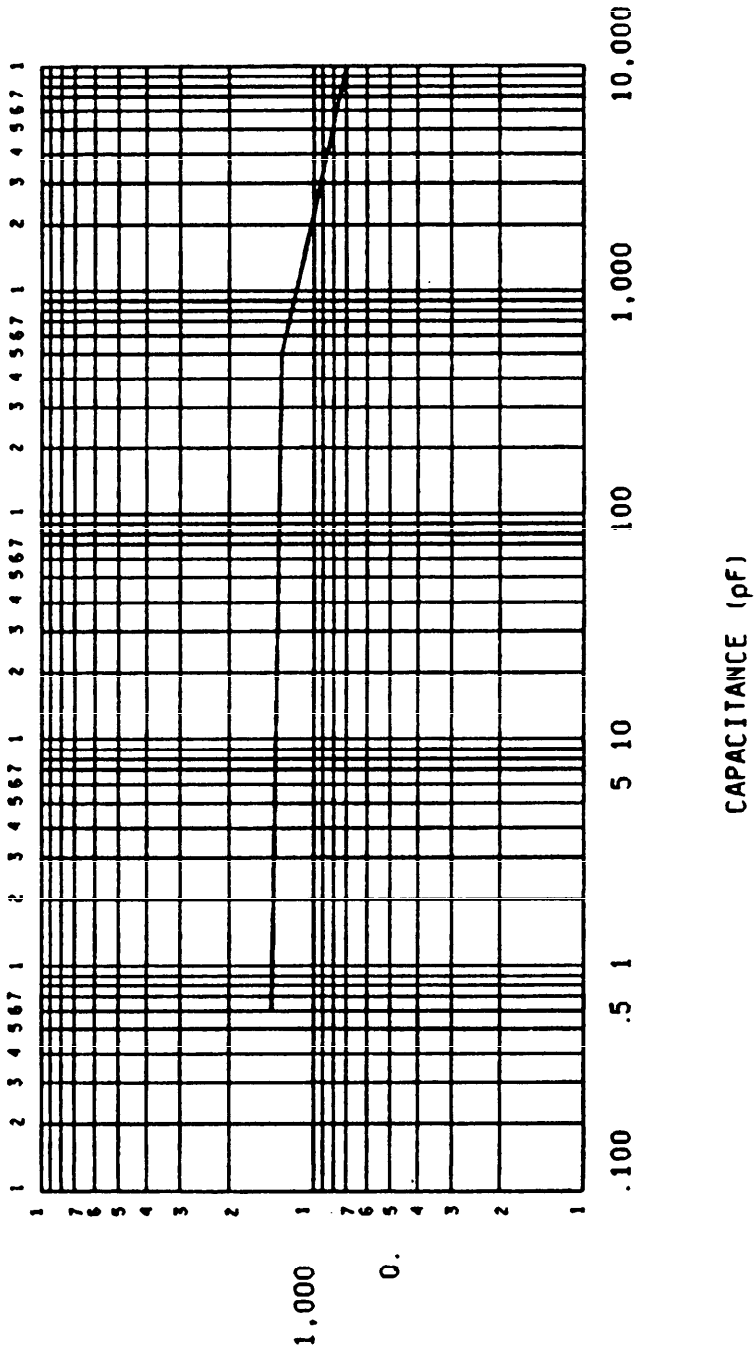

FIGURE 1. Quality factor (Q) at 1 MHz.

Source: https://assist.dla.mil -- Downloaded: 2016-11-16T02:11Z
Check the source to verify that this is the current version before use.

3.20 Fungus. The manufacturer shall certify that all external materials are fungus resistant or shall perform the test specified in 4.7.16. When tested as specified in 4.7.16, there shall be no evidence of fungus growth on the external surface of the capacitor.

3.21 Resistance to solvents. When capacitors are tested as specified in 4.7.17, there shall be no evidence of mechanical damage, and the marking shall remain legible.

3.22 Resistance to soldering heat. When tested as specified in 4.7.18, capacitors shall meet the following requirements:

Insulation resistance: Shall be not less than the initial requirement.
Capacitance: Shall change not more than 0.5 percent of nominal value or 0.5 pF, whichever is greater, from the initial value obtained when measured as specified in 4.7.5.
Dissipation factor: Shall not exceed the initial requirement.
Visual examination: There shall be no evidence of mechanical damage.

3.23 Moisture resistance. When tested as specified in 4.7.19, capacitors shall meet the following requirements:

Visual examination: No mechanical damage. Marking shall remain legible.
Insulation resistance: Unless otherwise specified (see 3.1), not less than 10 percent of the initial 25°C requirement.
Capacitance: Unless otherwise specified (see 3.1), change not to exceed ±10 percent from initial measured value.

3.24 Life. When tested as specified in 4.7.20, capacitors shall meet the following requirements, as applicable:

3.24.1 2,000 hour (qualification inspection) (see 4.7.20.1).

Insulation resistance: Shall be not less than the initial requirement.
Capacitance: Shall change not more than the percent specified (see 3.1) of the nominal value or 0.5 pF, whichever is greater, from the initial value obtained when measured as specified in 4.7.5.
Dissipation factor: Shall not exceed the value specified (see 3.1).
Visual examination: There shall be no evidence of mechanical damage.

3.24.2 6,000 hour (group C inspection) and extended life (see 4.7.20.2 and 4.7.20.3).

Insulation resistance: Shall be not less than 10,000 megohms.
Capacitance: Shall change not more than ±2.0 percent of nominal value or 0.5 pF, whichever is greater, from the initial value obtained when measured as specified in 4.7.5. For FR level calculation, the ±2.0 percent criteria shall govern from 2,000 to 30,000 hours.
Dissipation factor: Shall not exceed 1.0 percent.
Visual examination: There shall be no evidence of mechanical damage.

3.25 Marking. Capacitors shall be permanently marked with the Part or Identifying Number (PIN), "JAN" marking, date code, lot symbol, and manufacturer's source code in accordance with MIL-STD-1285 (see 3.1). Paper labels shall not be used. Each capacitor shall be legibly marked using smear-resistant ink which will withstand the environmental conditions specified herein. Marking shall remain legible after all tests. Manufacturing records shall include these same date codes and lot symbols. The date code, lot symbol, source code, capacitance, capacitance tolerance, and rated voltage shall be marked on the unit package. The nominal capacitance value, expressed in pF, is identified by a three-digit number; the first two digits represent significant figures and the last digit specifies the number of zeros to follow. When fractional values of a pF or values of less than 10 pF are required, the letter "R" shall be used to indicate the decimal point and the succeeding digits of the group shall represent significant figures. Example: 1R5 indicates 1.5 pF.

Source: https://assist.dla.mil -- Downloaded: 2016-11-16T02:11Z
Check the source to verify that this is the current version before use.

3.25.1 Substitution of failure rate levels. A manufacturer may supply to all higher failure rate levels than to which he is qualified. Items of an exponential FRL as shown in table II and marked to lower FRL's, with acquiring agency approval, are substitutable for higher FRL's, and shall not be remarked unless specified in the contract or purchase order (see 6.1), the lot date codes on the parts are unchanged, and the workmanship criteria is met.

TABLE II. Failure rate level substitutability.

Parts qualified to failure rate level	Are substitutable for failure rate level
S	M, P, and R
R	M and P
P	M

3.25.2 Substitution of capacitance tolerance and rated voltages. Parts qualified and marked to tighter capacitance tolerance or higher rated voltage, with acquiring agency approval, are substitutable for parts marked to looser capacitance tolerance or lower rated voltage, provided all other values, such as case size, characteristic, and leads are the same. The substitutable parts shall not be remarked unless specified in the contract or purchase order (see 6.1), the lot date code on the parts are unchanged, and the workmanship criteria is met.

3.25.3 "JAN" and "J" marking. The United States Government has adopted, and is exercising legitimate control over, the certification marks "JAN" and "J" to indicate electrical equipment, namely, resistors, capacitors, and the like, acquired by, or manufactured for use by, or for the Government in accordance with standard Government specifications. Accordingly, capacitors acquired to and meeting all of the criteria specified herein and in applicable specification sheets shall bear the certification mark "JAN", except that capacitors too small to bear the certification mark "JAN" shall bear the letter "J". The "JAN" or "J" shall be located on the first line above or below the PIN. Capacitors furnished under contracts or orders which either permit or require deviation from the conditions or requirements specified herein and in applicable specification sheets shall not bear "JAN" or "J". In the event a capacitor sample fails to meet the requirements of this specification and the applicable specification sheet, the manufacturer shall remove the "JAN" or the "J" from the sample tested and also from all capacitors represented by the sample. The United States Government has obtained Certificate of Registration No. 504,860 for the certification mark "JAN".

3.25.4 Full marking. Unless otherwise specified (see 3.1), capacitors shall be marked with the "JAN" or "J" marking, PIN, date code and lot number, manufacturer's name (not trademark) or the Commercial and Government Entity (CAGE) code, voltage, capacitance, and capacitance tolerance. There shall be no space between the symbols which comprise the PIN. The date code and lot number shall consist of the year, week, and lot code. For example: The third week of 1984 would be 8403.

3.26 Workmanship. Capacitors shall be so processed in such a manner as to uniform in quality and shall be free from pits, corrosion, cracks, rough edges, and other defects which will affect life, serviceability, or appearance.

4. QUALITY ASSURANCE PROVISIONS

4.1 Responsibility for inspection. Unless otherwise specified in the contract or purchase order, the contractor is responsible for the performance of all inspection requirements as specified herein. Except as otherwise specified in the contract or purchase order, the contractor may use his own or any other facilities suitable for the performance of the inspection requirements specified herein, unless disapproved by the Government. The Government reserves the right to perform any of the inspections set forth in the specification where such inspections are deemed necessary to assure supplies and services conform to prescribed requirements.

Source: https://assist.dla.mil -- Downloaded: 2016-11-16T02:11Z
Check the source to verify that this is the current version before use.

4.1.1 Responsibility for compliance. All items must meet all requirements of sections 3 and 5. The inspection set forth in this specification shall become a part of the contractor's overall inspection system or quality program. The absence of any inspection requirements in the specification shall not relieve the contractor of the responsibility of assuring that all products or supplies submitted to the Government for acceptance comply with all requirements of the contract. Sampling in quality conformance does not authorize submission of known defective material, either indicated or actual, nor does it commit the Government to acceptance of defective material.

4.1.2 Reliability assurance program. A reliability assurance program shall be established and maintained in accordance with MIL-STD-790.

4.1.3 SPC. An SPC program shall be established and maintained in accordance with EIA-557. Evidence of such compliance shall be verified by the qualifying activity as a prerequisite for qualification and retention of qualification.

4.2 Classification of inspections. The inspections specified herein are classified as follows:

a. Qualification inspection (see 4.4).

b. Verification of qualification (see 4.5).

c. Quality conformance inspection (see 4.6).

4.3 Inspection conditions. Unless otherwise specified herein, all inspections shall be performed in accordance with the test conditions specified in the "GENERAL REQUIREMENTS" of MIL-STD-202.

4.3.1 Accuracy of test voltage measurements. Accuracy of all test voltage measurements shall be ±2.0 percent of the specified voltage.

4.3.2 Referenced measurements. When requirements are based on comparative measurements made before and after conditioning, the reference measurements shall be considered the last measurement made at 25°C ±3°C prior to conditioning. Unless reference measurements have been made within 30 days prior to the beginning of conditioning, they shall be repeated.

4.3.3 Power supply. The power supply used for life testing shall have a regulation of ±2.0 percent or less of the specified test voltage.

4.4 Qualification inspection.[1/] Qualification inspection shall be performed at a laboratory acceptable to the Government (see 6.2) on sample units produced with equipment and procedures normally used in production.

4.4.1 Sample size. The number of capacitors to be subjected to qualification inspection shall be as specified in the appendix to this specification.

4.4.2 Inspection routine. The sample shall be subjected to the inspection specified in table III, in the order shown. All sample units shall be subjected to the inspection of groups I and II. The sample units shall then be divided as specified in table III for groups III to VI inclusive, and subjected to the inspections for their particular groups; one group shall be subjected to the accelerated condition and the other group to the rated condition (see 4.4.4.1a).

4.4.3 Failures. Failures in excess of those allowed in table III shall be cause for refusal to grant qualification approval.

1/ The decision as to whether or not the product is to be included on the QPL shall be made at the conclusion of the 2,000-hour life test.

Source: https://assist.dla.mil -- Downloaded: 2016-11-16T02:11Z
Check the source to verify that this is the current version before use.

TABLE III. Qualification inspection.

Examination or test	Requirement paragraph	Test method paragraph	Number of sample units to be inspected	Number of failures allowed 1/
Group I				
Seal	3.6	4.7.2	115	0
High voltage stabilization	3.7	4.7.3		
Group II				
Visual and mechanical examination (external) 2/ 3/	3.1, 3.4, 3.5, 3.25, and 3.26	4.7.1	115 4/	1
Insulation resistance (at 125°C and 25°C)	3.8	4.7.4		
Capacitance	3.9	4.7.5		
Dissipation factor	3.10	4.7.6		
Group III				
Thermal shock	3.11	4.7.7	12	
Quality factor (Q)	3.12	4.7.8		
Shock, specified pulse	3.13	4.7.9		
Vibration, high frequency	3.14	4.7.10		
Group IV				
Solderability	3.15	4.7.11	12	
Terminal strength	3.16	4.7.12		
Barometric pressure	3.17	4.7.13		
Temperature coefficient and capacitance drift	3.18	4.7.14		
Salt spray (corrosion)	3.19	4.7.15		
Group V				
Fungus 5/	3.20	4.7.16	5 } 10	1
Resistance to solvents	3.21	4.7.17		
Resistance to soldering heat	3.22	4.7.18	5	
Moisture resistance	3.23	4.7.19		
Group VI				
Life (rated condition)	3.24.1	4.7.20.1	50	1
Life (accelerated condition)	3.25.2	4.7.20.3	30	

1/ A specimen having one or more defects shall be considered as a single failure.
2/ Nondestructive tests.
3/ Marking defects are based on visual examination only and shall be charged only for illegible, incomplete or incorrect marking.
4/ One additional sample unit is included in each sample of 115 sample units to permit substitution for the failure allowed in group II.
5/ Certification of fungus resistance may be substituted for testing.

Source: https://assist.dla.mil -- Downloaded: 2016-11-16T02:11Z
Check the source to verify that this is the current version before use.

4.4.4 Failure rate level and quality level verification.

4.4.4.1 Failure rate (FR) qualification and lot conformance FR inspection. FR qualification and lot conformance FR inspection shall be in accordance with the general and detailed requirements of MIL-STD-690 with the following details.

a. Procedure I - Qualification at the initial FR level. Level M of FRSP-90 shall apply. Sample units which have been subjected to the qualification inspection specified in group VI, table III (see 4.4.2) shall be continued on test as specified in 4.7.20.3.1.

b. Procedure II - Extension of qualification to lower FR levels. To extend qualification to the R and S FR levels, data from two or more styles of similar construction may be combined.

c. Procedure III - Maintenance of FR level qualification. Maintenance period B of FRSP-10 shall apply. Regardless of the number of production lots produced during this period, the specified number of unit hours shall be accumulated to maintain qualification.

4.4.4.2 Quality level verification. The contractor is responsible for establishing a quality system to verify the ppm defect level of lots that are subjected to subgroup 2 tests of the group A inspections. The ppm defect level shall be maintained for each specification sheet. The ppm defect level shall be based on a 6-month moving average. The contractor shall verify and report individual ppm categories (i.e., ppm-2 and ppm-3) and an overall ppm defect level (i.e., ppm-5). In the event that the contractor meets or exceeds 100 ppm for ppm-2 the qualifying activity shall take the action specified in 4.4.4.3.

4.4.4.3 Noncompliance. The contractor shall notify the qualifying activity when the 100 ppm level is reached or exceeded for ppm-2. The contractor shall provide sufficient information to the qualifying activity documenting the causes of the problem and what corrective action is being taken. Failure to correct this problem shall be the basis for removal of the affected product from the QPL.

4.5 Verification of qualification. Every 6 months, the manufacturer shall compile a summary of the results of quality conformance inspections and where applicable, extended failure rate test data, in the form of a verification of qualification report, and forward it to the qualifying activity as the basis of continued qualification approval. In addition to the periodic submission of failure rate test data, the manufacturer shall immediately notify the qualifying activity whenever the failure rate data indicates that the manufacturer has failed to maintain his qualified failure rate level. Continuation shall be based on evidence that, over the 6-month period, the following has been met:

a. Verification by the qualifying activity that the manufacturer meets the requirements of MIL-STD-790.

b. The manufacturer has not modified the design of the item.

c. The specification requirements for the item have not been amended so far as to affect the character of the item.

d. Lot rejection for group A inspection does not exceed 10 percent or one lot, whichever is greater.

e. The records of all failure rate tests combined substantiate that the 1.0 percent/1,000 hours, or 0.1 percent/1,000 hours, "P" failure rate levels have been maintained or that the manufacturer continues to meet the 0.01 percent/1,000 hours, or 0.001 percent/1,000 hours failure rate level for which qualified although the total component hours of testing does not, as yet, meet the requirements of 4.4.4.1c.

f. The contractor shall provide documentation to the qualifying activity pertaining to ppm calculations including numbers of parts per style tested, individual ppm defect categories (i.e., ppm-2 and ppm-3) and their overall ppm defect rate (ppm-5). This information shall be submitted on a specification sheet basis.

Source: https://assist.dla.mil -- Downloaded: 2016-11-16T02:11Z
Check the source to verify that this is the current version before use.

Pages following the end of this page of the incomplete manual

If group C test requirements were not met and the manufacturer has taken corrective action satisfactory to the Government, the forwarding of the verification of qualification report may be delayed until within 30 days after completion of retesting of the periodic quality conformance tests. In this case, the qualifying activity shall be notified of this condition within the time the original verification of qualification report was due. All reports shall be certified by the responsible company official. The qualifying activity shall be contacted for the report format.

In the event that no production occurred during the reporting period, a report shall be submitted certifying that the manufacturer still has the capabilities and facilities necessary to produce the item. The manufacturer, however, shall maintain the required number of unit hours in the specified maintenance period in order to remain qualified to the applicable failure rate levels. The manufacturer shall also produce enough parts during any reporting period in order to perform all applicable group C tests.

4.5.1 Records. Test records shall be in accordance with the format in MIL-STD-690.

4.6 Quality conformance inspection.

4.6.1 Inspection of product for delivery. Inspection of product for delivery shall consist of group A inspection.

4.6.1.1 Inspection and production lot.

4.6.1.1.1 Inspection lot. An inspection lot, as far as practicable, shall consist of capacitors from the same production line or lines, of the same style and characteristic, from the same basic design, produced under essentially the same conditions, and offered for inspection during a period not exceeding 1 month. Each lot shall be kept separate from every other lot. The sample selected from the lot shall be representative of the capacitance values and case sizes in the lot. All sample units belonging to a lot shall be identified by means of a code symbol (either letters or numbers, at the option of the manufacturer).

4.6.1.1.2 Production lot. A production lot shall consist of all capacitors of the same style, voltage rating, nominal capacitance value, voltage temperature characteristic, and termination finish. Manufacture of all parts in the lot shall have been started, processed, assembled, and tested as a group. Lot identity shall be maintained throughout the manufacturing cycle.

4.6.1.2 Group A inspection. Group A inspection shall consist of the inspection specified in table IV in the order shown.

4.6.1.2.1 Subgroup 1 tests. Subgroup 1 tests shall be performed on a production lot basis on 100 percent of the product supplied under this specification. Capacitors failing the tests of subgroup 1 shall be removed from the lot. If during the 100 percent inspection, screening requires that more than 5 percent of the capacitors be discarded, the entire lot shall be rejected.

Source: https://assist.dla.mil -- Downloaded: 2016-11-16T02:11Z
Check the source to verify that this is the current version before use.

TABLE IV. Group A inspection.

Examination or test	Requirement paragraph	Test method paragraph	Sample	Lot criteria
Subgroup 1				
Seal	3.6	4.7.2	100% inspection	
High voltage stabilization	3.7	4.7.3		
Insulation resistance (at 25°C)	3.8	4.7.4		
Capacitance	3.9	4.7.5		
Dissipation factor	3.10	4.7.6		
Thermal shock (styles CYR51, CYR52, and CYR53 only)	3.11	4.7.7		
Subgroup 2 (ppm)				
Insulation resistance (at 25°C) (ppm-2)	3.8	4.7.4	See table V	Reject one defect
Capacitance (ppm-2)	3.9	4.7.5		
Dissipation factor (ppm-2)	3.10	4.7.6		
Dimension only (ppm-3)	3.5	4.7.1	13	0 failures
Subgroup 3				
Visual and mechanical examination				
Materials	3.4	4.7.1	13	0 failures
Physical dimensions	3.1	4.7.1		
Design and construction (other than physical dimensions)	3.5	4.7.1		
Marking 1/	3.25	4.7.1		
Workmanship	3.26	4.7.1		
Subgroup 4				
Solderability	3.15	4.7.11	13	0 failures

1/ Marking defects are based on visual inspection only.

TABLE V. Sampling plans for ppm categories.

Lot size	Sample size
1 - 125	100 percent
126 - 3,200	125
3,201 - 10,000	200
10,001 - 35,000	315
35,001 - 150,000	500
150,001 - 500,000	800
500,001 - up	1,250

Source: https://assist.dla.mil -- Downloaded: 2016-11-16T02:11Z
Check the source to verify that this is the current version before use.

4.6.1.2.2 Manufacturer's production inspection. If the manufacturer performs tests similar to those specified in subgroup 1, table IV, as the final step of his production process, group A, subgroup 1 may be waived and the data resulting from the manufacturer's production tests may be used instead. Authority to waive the subgroup 1 inspections shall be granted by the qualifying activity only. The following criteria must be complied with:

a. Tests conducted by the manufacturer during production shall be clearly identical to or more stringent than that specified for subgroup 1 or 2.

b. Manufacturer subjects 100 percent of the product supplied under this specification to his production tests.

c. The parameters measured and the failure criteria shall be the same or more stringent than those specified herein.

d. The lot rejection criterion is the same or stringent than that specified herein.

e. The manufacturer shall make available all information concerning the test procedures and instrumentation used in his production tests. This data shall be provided as part of the evaluation required for MIL-STD-790. The manufacture shall also make available to the Government all records of all detail test data resulting from production tests.

f. Once approved, the manufacturer shall not change the test procedures or criteria without prior notification and concurrence by the qualifying activity.

4.6.1.2.3 Rejected lots. Production lots exceeding the 5 percent PDA of group A, subgroup 1 inspection shall be segregated from new lots and lots that have passed inspection. Lots rejected may be offered for acceptance only if the manufacturer 100 percent retests to the requirements of subgroup 1. Resubmitted lots shall be kept separate and shall be clearly identified as resubmitted lots. If, during the 100 percent reinspection to subgroup 1, the lot exceeds 3 percent defective, the lot shall be rejected and shall not be resubmitted.

4.6.1.2.4 Subgroup 2 tests (ppm categories).

4.6.1.2.4.1 Sampling plans. Subgroup 2 tests shall be performed on an inspection lot basis. Samples subjected to subgroup 2 shall be selected in accordance with table V, based on the size of the inspection lot. In the event of 1 or more failures, the lot shall be rejected. Equipment and operators used to perform the subgroup 2 tests shall not be the same as those used in the subgroup 1,100 percent tests.

4.6.1.2.4.2 Rejected lots. The rejected lot shall be segregated from the new lots and those lots that have passed inspection. The rejected lot shall be 100 percent inspected for those quality characteristics found defective in the sample and any defectives found removed from the lot. A new sample of parts shall then be randomly selected in accordance with table V. If one or more defects are found in this second sample, the lot shall be rejected and shall not be supplied to this specification.

4.6.1.2.4.3 PPM calculations. PPM calculations shall be based on the results of the first sample check as prescribed in 4.6.1.2.4.1. Calculations and data exclusion shall be in accordance with EIA-554. (NOTE: PPM calculations shall not use data on the second sample submission.)

4.6.1.2.5 Subgroup 3 tests. Subgroup 3 tests shall be performed on an inspection lot basis. A sample of 13 parts shall be randomly selected. If one or more defects are found, the lot shall be 100 percent screened for that defect. A new sample shall then be randomly selected. If one or more defects are found in this second sample, the lot shall be rejected and shall not be supplied to this specification.

Source: https://assist.dla.mil -- Downloaded: 2016-11-16T02:11Z
Check the source to verify that this is the current version before use.

4.6.1.2.6 Subgroup 4 tests (solderability).

4.6.1.2.6.1 Inspection lot. An inspection lot for the purpose of subgroup 4 (solderability) testing shall consist of all lots manufactured with the same diameter lead wire and offered for inspection within the same work week. Each manufacturing lot shall be kept separate from every other lot. All samples belonging to a manufacturing lot shall be identified to that lot. Means of identification is at the option of the manufacturer.

4.6.1.2.6.2 Sampling plan. A minimum of 13 pieces shall be selected randomly from each inspection lot; however, each manufacturing lot shall be represented in the sample. If the inspection lot consists of more than 13 manufacturing lots, then a minimum of one sample shall be selected from each manufacturing lot. If there are one or more failures, the inspection lot shall be considered to have failed. For lots of 100 pieces or less, six pieces shall be randomly selected for sampling.

4.6.1.2.6.3 Rejected lots. In the event of one or more defects, the inspection lot is rejected. The manufacturer may use one of the following options to rework the lot:

a. Each production lot that was used to form the failed inspection lot shall be individually submitted to the solderability test as required in 4.6.1.2.6.2. Production lots that pass the solderability test are available for shipment. Production lots failing the solderability test can be reworked only if submitted to the solder dip procedure in b.

b. The manufacturer submits the failed lot to a 100 percent solder dip using an approved solder dip process in accordance with 3.5.2. Following the solder dip, the electrical measurements required in group A, subgroup 1 tests shall be repeated on 100 percent of the lot. The PDA for the electrical measurements shall be as for the subgroup 1 tests. (Note: If X-ray and hermetic seal are required in the group A, subgroup 1 tests, these tests shall be repeated.) Thirteen additional samples shall be then selected and subjected to the solderability test with zero defects allowed. If the lot fails this solderability test, the lot shall be considered rejected and shall not be furnished against the requirements of this specification.

4.6.1.2.6.4 Disposition of samples. The solderability test is considered a destructive test, and samples submitted to the solderability test shall not be supplied on the contract.

4.6.2 Periodic inspection. Periodic inspection shall consist of group C inspection. Except where the results of this inspection show noncompliance with the applicable requirements (see 4.6.2.1.2), delivery of products which have passed group A inspection shall not be delayed pending the results of periodic inspection.

4.6.2.1 Group C inspection. Group C inspection shall consist of the tests specified in table VI, in the order shown, and shall be performed on sample units selected from lots that have passed group A inspection. Test data obtained therefrom shall be reviewed as a part of the complete verification of qualification. Maximum and minimum case sizes shall be represented, as far as practical, in at least the approximate ratio of production.

Source: https://assist.dla.mil -- Downloaded: 2016-11-16T02:11Z
Check the source to verify that this is the current version before use.

TABLE VI. Qualification inspection.

Test	Requirement paragraph	Test method paragraph	Number of sample units to be inspected	Number of failures allowed 1/
Group I				
Subgroup IA				
Thermal shock	3.11	4.7.7	24	1
Subgroup IB				
Quality factor (Q)	3.12	4.7.8	12	1
Shock, specified pulse	3.13	4.7.9		
Vibration, high frequency	3.14	4.7.10		
Subgroup IC				
Terminal strength	3.16	4.7.12	12	1
Barometric pressure	3.17	4.7.13		
Temperature coefficient and capacitance drift	3.18	4.7.14		
Salt spray (corrosion)	3.19	4.7.15		
Subgroup ID				
Resistance to solvents	3.21	4.7.17	3	0
Resistance to soldering heat	3.22	4.7.18		
Moisture resistance	3.23	4.7.19		
Group II				
Life (accelerated conditions)	3.24.2	4.7.20.3	10 (minimum)	(See 4.6.2.1.1.2)

4.6.2.1.1 Sampling plan.

4.6.2.1.1.1 Group I. Fifty-one sample units shall be taken from production every 2 months and subjected to the applicable tests for their particular subgroup. Allowable failures shall be as specified in table VI.

4.6.2.1.1.2 Group II. A minimum of 10 sample units shall be selected from each inspection lot produced during a 2-month period. Allowable failures shall be as specified in MIL-STD-690. The accumulated data shall be used for maintenance and extension of FR qualification.

4.6.2.1.2 Noncompliance. If a sample unit fails to pass group C inspection, the manufacturer shall notify the qualifying activity of such failure and take corrective action on the materials or processes, or both, as warranted, and on all units of product which can be corrected and which were manufactured under essentially the same conditions, with essentially the same materials and processes, and which are considered subject to the same failure. Acceptance of the product shall be discontinued until corrective action acceptable to the Government, has been taken. After the corrective action has been taken, group C inspection shall be repeated on additional sample units (all inspection or the inspection which the original sample failed, at the option of the Government). Group A inspection may be reinstituted; however, final acceptance shall be withheld until the group C inspection has shown that the corrective action was successful. In the event of failure after reinspection, information concerning the failure and corrective action taken shall be furnished to the cognizant inspection activity and the qualifying activity.

4.6.2.1.3 Disposition of sample units. Sample units which have been subjected to group C inspection shall not be delivered on the contract or order.

4.6.3 Inspection of packaging. Sample packages and packs shall be selected and inspected in accordance with MIL-C-39028 to verify conformance with the requirements in section 5 of this specification.

Source: https://assist.dla.mil -- Downloaded: 2016-11-16T02:11Z
Check the source to verify that this is the current version before use.

4.7 Methods of examination and test.

4.7.1 Visual and mechanical examination. Capacitors shall be examined to verify that the materials, design, construction, physical dimensions, marking, and workmanship are in accordance with the applicable requirements (see 3.1, 3.4, 3.5, 3.25, and 3.26).

4.7.2 Seal (see 3.6). Capacitors shall be tested in accordance with 4.7.2.1 or 4.7.2.2, as specified (see 3.1).

4.7.2.1 Test I (for transparent cases). Capacitors shall be immersed in a fluorescent penetrant for 6.5 minutes and a pressure of 20 pounds per square inch gauge (psig) shall be maintained for 3 minutes. Upon removal from the penetrant, capacitors shall be cleaned, dried, and inspected under ultra-violet light for penetration of the dye.

4.7.2.2 Test II (for opaque cases). Capacitors shall be subjected to a saturated steam atmosphere of 5 psig for a period of 20 to 30 minutes. Insulation resistance shall be measured as specified in 4.7.4 within 5 minutes after removal from steam atmosphere.

4.7.3 High voltage stabilization (see 3.7). Capacitors rated at 300 volts and above shall be subjected to 1,500 volts ±30 volts dc; capacitors rated at less than 300 volts shall be subjected to 400 ±2 percent of the dc rated voltage at room temperature for 50 +10, -0 hours. During this test, capacitors shall be adequately protected against temporary voltage surges of 10 percent or more of the test voltage. After the test, capacitors shall show no damage, arcing, or breakdown.

4.7.4 Insulation resistance (see 3.8). Capacitors shall be tested in accordance with method 302 of MIL-STD-202. The following details shall apply:

a. Test potential: Shall not exceed the rated voltage (see 3.1).

b. Points of measurement: From terminal to terminal.

4.7.5 Capacitance (see 3.9). Capacitance shall be measured in accordance with method 305 of MIL-STD-202. The following details shall apply:

a. Test frequency: 1 MHz ±50 kHz when the nominal capacitance is 1,000 pF or less, and 1 kHz ±50 Hz, when the nominal capacitance is greater than 1,000 pF. At the option of the manufacturer, capacitance measurements may be made at any frequency from 1 kHz to 1 MHz and referred to measurements at 1 MHz and 1 kHz, respectively.

b. Limit of accuracy: Shall be ±0.2 percent of nominal capacitance value or ±0.2 pF, whichever is greater.

4.7.6 Dissipation factor (see 3.10). Dissipation factor shall be measured at a frequency of 1 kHz ±100 Hz. Measurement accuracy shall be within ±2.0 percent or 0.0005, whichever is greater.

Source: https://assist.dla.mil -- Downloaded: 2016-11-16T02:11Z
Check the source to verify that this is the current version before use.

4.7.7 Thermal shock (see 3.11). Capacitors shall be tested in accordance with method 107 of MIL-STD-202. The following details shall apply:

a. Test condition letter B.

b. Measurements before cycling: Not applicable.

c. Measurements after cycling:

(1) Insulation resistance: Shall be not less than 100,000 megohms.

(2) Visual examination: There shall be no evidence of corrosion or mechanical damage.

(3) Dielectric withstanding voltage: There shall be no evidence of damage, arcing, or breakdown.

(4) Capacitance: Shall change not more than 0.5 percent of the nominal value or 0.5 pF, whichever is greater, from the initial value obtained when measured as specified in 4.7.5.

(5) Dissipation factor: Shall not exceed the value specified (see 3.1).

4.7.8 Quality factor (Q) (see 3.12). Capacitors shall be tested in accordance with method 306 of MIL-STD-202. The test frequency shall be 1 MHz ±50 kHz.

4.7.9 Shock, specified pulse (see 3.13). Capacitors shall be tested in accordance with method 213 of MIL-STD-202. The following details shall apply:

a. Mounting: Capacitors shall be rigidly mounted by the body to the test apparatus in such a manner that the mounting method does not damage the capacitors.

b. Test condition letter I (100 g's).

c. Measurements during shock: During shock, an electrical measurement shall be made to determine intermittent contacts or open- or short-circuiting. The accuracy of the detecting equipment shall be sufficient to detect any interruption of 0.5 ms or greater duration.

After the test, capacitors shall be examined for evidence of arcing and mechanical damage.

4.7.10 Vibration, high frequency (see 3.14). Capacitors shall be tested in accordance with method 204 of MIL-STD-202. The following details shall apply:

a. Mounting: Capacitors shall be rigidly mounted by the body to the test apparatus in such a manner that the mounting method does not damage the capacitors.

b. Test condition letter D (20 g's).

c. Measurements during shock: During the last cycle in each direction, an electrical measurement shall be made to determine intermittent contacts or open- or short-circuiting. The accuracy of the detecting equipment shall be sufficient to detect any interruption of 0.5 ms or greater duration.

After the test, capacitors shall be visually examined for evidence of arcing and mechanical damage.

4.7.11 Solderability (see 3.15). Capacitors shall be tested in accordance with method 208 of MIL-STD-202. The following details shall apply:

a. Number of termination of each capacitor to be tested: Two.

b. Depth of immersion in flux and solder: Both terminals shall be immersed to within 0.05 inch of the capacitor body.

Source: https://assist.dla.mil -- Downloaded: 2016-11-16T02:11Z
Check the source to verify that this is the current version before use.

4.7.12 Terminal strength (see 3.16). The number of sample units shall be divided into two equal groups; a different group shall be used for each of the following tests:

a. Pull test. Capacitors shall be tested in accordance with method 211 of MIL-STD-202. The following detail and exception shall apply:

(1) Test condition letter A.

(2) Applied force: 4-1/2 pounds.

b. Bend test. A 1-pound weight shall be hung from each terminal in turn at a point .750 inch (19.05 mm) from its point of egress from the capacitor body, and the body shall be rotated about an axis which is perpendicular to the axis of the terminals and parallel to the largest face, through 90 degrees, back through 180 degrees, and then return to its original position (see figure 2).

After the test, capacitors shall be visually examined for evidence of loosening or rupturing of the terminals, or damage to the terminals or seal.

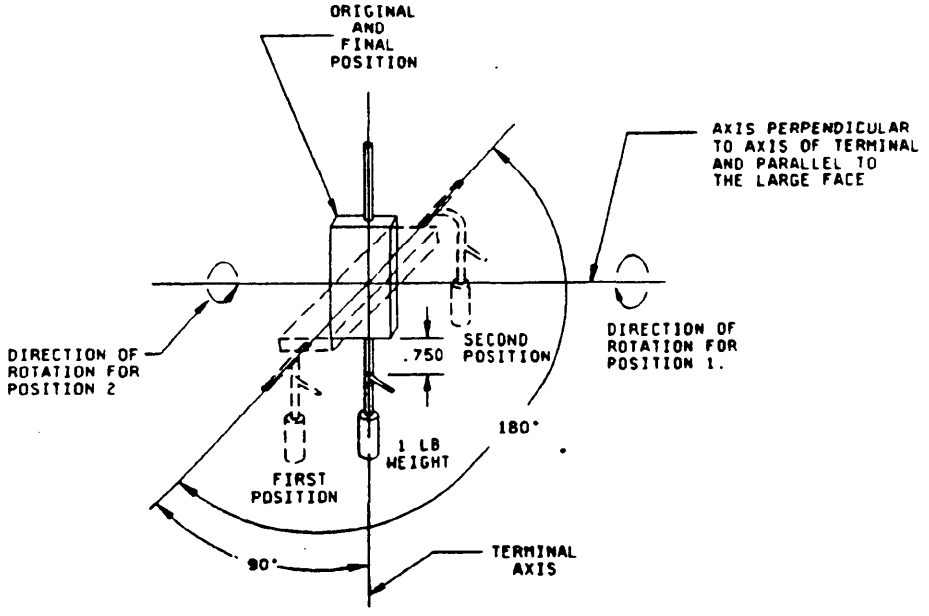

FIGURE 2. Bend test.

Source: https://assist.dla.mil -- Downloaded: 2016-11-16T02:11Z
Check the source to verify that this is the current version before use.

4.7.13 Barometric pressure (see 3.17). Capacitors shall be tested in accordance with method 105 of MIL-STD-202. The following details shall apply:

a. Method of mounting: Not applicable.

b. Test condition letter D (100,000 feet).

c. Tests during subjection to reduced pressure: 150 percent of rated voltage shall be applied between the terminals for not less than 1 second nor more than 5 seconds.

After the test, capacitors shall be examined for evidence of damage, arcing, and breakdown.

4.7.14 Temperature coefficient and capacitance drift (see 3.18). Capacitance shall be measured as specified in 4.7.5, except that measurements shall be made in the order and at the temperature shown in the following, at a frequency of 100 ±10 kHz. The reference frequency at which measurements are made shall not drift more than ±50 Hz during the test. An accuracy of ±0.025 percent of nominal capacitance +0.05 pF shall be maintained for measurement of capacitance change.

a. For qualification inspection: +25°C ±2°C; -55°C +0°, -2°C; -10°C ±2°C; +25°C ±2°C; +65°C ±2°C; +85°C +2°C, -0°C; +125°C +2°C, -0°C; and +25°C ±2°C.

b. For quality conformance inspection: +25°C ±2°C; -55°C +0°, -2°C; +25°C ±2°C; +125°C +2°C, -0°C; and +25°C ±2°C, respectively.

The measurement at each temperature shall be recorded when two successive readings taken at 5-minute intervals at that temperature indicate no change in capacitance. The temperatures at the time of measurement shall be measured at an accuracy of ±1.0 percent of the temperature difference between the nominal test temperature and the nominal reference temperature +0.5°C.

4.7.14.1 Temperature coefficient. The temperature coefficient shall be computed as follows:

$$TC = \frac{(C_2 - C_1)\ 10^6}{(T_2 - T_1)\ C_1}$$

Where:

TC = Temperature coefficient (in parts per million per degree Celsius).
C_1 = Capacitance (in pF at the middle 25°C (reference temperature)).
C_2 = Capacitance (in pF at test temperature).
T_1 = 25°C.
T_2 = Test temperature (in degrees Celsius).

4.7.14.1.1 Continuous curve temperature coefficient. As an alternate to the measurements specified in 4.7.14, a continuous curve of capacitance versus temperature may be produced by subjecting the capacitors to a slowly varying temperature. The temperature shall be varied from +25°C to -55°C to +125°C to +25°C. A temperature-sensing device shall be embedded in a dummy capacitor in a manner to assure accurate internal readings in the sample under test. Temperature shall be varied slowly enough to produce a smooth uniform curve with no loops at -55°C or +125°C. Other test conditions shall be as specified in 4.7.14.

4.7.14.2 Capacitance drift. Capacitance drift shall be computed by dividing the greatest single difference between any two of the three values recorded at +25°C by the intermediate value recorded at +25°C.

Source: https://assist.dla.mil -- Downloaded: 2016-11-16T02:11Z
Check the source to verify that this is the current version before use.

4.7.15 Salt spray (corrosion)(see 3.19). Capacitors shall be tested in accordance with method 101 of MIL-STD-202. The following detail and exception shall apply:

a. Applicable salt solution: 5 percent.

b. Examination after test: Capacitors shall be dried for 24 hours ±30 minutes at a temperature of 40°C, and shall then be visually examined for evidence of harmful corrosion and mechanical damage.

4.7.16 Fungus (see 3.20). Capacitors shall be tested in accordance with method 508 of MIL-STD-810. Pretest and post-test measurements are not required. After the test, capacitors shall be visually examined for evidence of fungus growth.

4.7.17 Resistance to solvents (see 3.21). Capacitors shall be tested in accordance with method 210 of MIL-STD-202. The following details and exception shall apply:

a. Portion of specimen to be brushed: That portion on which marking is present.

b. Number of specimens to be tested: As specified in applicable inspection tables.

c. Permissible extent of damage: As specified in 3.21.

4.7.18 Resistance to soldering heat (see 3.22). Capacitors shall be tested in accordance with method 210 of MIL-STD-202. The following details and exception shall apply:

a. Depth of immersion in molten solder: To a minimum 0.250 inch (6.35 mm) from the capacitor body.

b. Test condition letter G (260°C ±5°C for 10 ±1 seconds).

c. Cooling time prior to measurement after test: 10 ±1 minutes.

d. Measurements and examination after test: Insulation resistance, capacitance, and dissipation factor shall be measured at 25°C as specified in 4.7.4, 4.7.5, and 4.7.6, respectively. Capacitors shall then be examined for evidence of mechanical damage.

4.7.19 Moisture resistance (see 3.23). Following resistance to soldering heat, capacitors shall be tested in accordance with method 106 of MIL-STD-202. The following details and exceptions shall apply:

a. Mounting: Capacitors shall be mounted by their terminals in a manner that will keep the capacitor body from touching the test fixture. Capacitors shall be so spaced that the distance between the mounting support and capacitor body is .625 ±.062 inch (15.88 ±1.57 mm).

b. Initial measurements: Not applicable.

c. Number of cycles: 20 continuous cycles with step 7a applying for the first 10 cycles only. Step 7b: Not applicable.

d. Polarization voltage: For the first 10 cycles, a dc potential of 90 to 100 volts shall be applied across the capacitor terminals. Once each day, a check shall be made to determine whether a capacitor has shorted.

e. Final measurements: After the final cycle and between 1 and 4 hours after removal from the chamber, insulation resistance shall be measured at room ambient conditions as specified in 4.7.4. Artificial drying shall not be permitted. Between 4 and 24 hours after this measurement, capacitors shall be visually examined for evidence of corrosion or mechanical damage; capacitance, and dissipation factor shall then be measured as specified in 4.7.5 and 4.7.6, respectively.

Source: https://assist.dla.mil -- Downloaded: 2016-11-16T02:11Z
Check the source to verify that this is the current version before use.

4.7.20 Life (see 3.24).

4.7.20.1 2,000 hour (qualification inspection) (see 3.24.1). Capacitors shall be tested in accordance with method 108 of MIL-STD-202. The following details and exceptions shall apply:

a. Distance of temperature measurements from specimens, in inches: Not applicable.

b. Test temperature and tolerance: +125°C +4°C, -0°C.

c. Operating conditions: DC rated voltage shall be applied to the capacitors being tested under rated conditions; 150 percent of the dc rated voltage shall be applied to the capacitors being tested under accelerated conditions. The maximum surge current shall be not more that 50 mA. A current-limiting resistor shall be inserted into the circuit.

d. Test condition letter F (2,000 +72, -0 hours).

e. Measurements after exposure: At the conclusion of this test, the insulation resistance, capacitance, and dissipation factor shall be measured as specified in 4.7.4, 4.7.5, and 4.7.6, respectively.

f. Examination after test: Capacitors shall be visually examined for evidence of corrosion or mechanical damage.

4.7.20.2 6,000 hour (group C inspection) (see 3.24.2). Except as specified in the following, capacitors shall be tested as specified in 4.7.20.1:

a. Test duration: 6,000 +96, -0 hours at accelerated condition only.

b. Measurements during and after exposure: Insulation resistance, capacitance, and dissipation factor shall be measured as specified in 4.7.4, 4.7.5, and 4.7.6, respectively, after 2,000 +72, -0 hours and every 2,000 +96, -0 hours thereafter until a total of 6,000 +96, -0 hours have elapsed.

4.7.20.3 Extended life (see 3.24.2).

4.7.20.3.1 Following 2,000-hour qualification test. Capacitors tested under accelerated conditions shall be continued on test for an additional 4,000 +96, -0 hours; measurements during and after exposure shall be as specified in 4.7.20.2. Capacitors tested under rated conditions shall be continued on test for an additional 28,000 +96, -0 hours; measurements during and after exposure shall be accomplished after 2,000 +96, -0 hours thereafter up to 10,000 hours; then every 5,000 +96, -0 hours until a total of 30,000 +96, -0 hours have elapsed.

5. PACKAGING

5.1 Packaging requirements. The requirements for packaging shall be in accordance with MIL-C-39028.

6. NOTES

(This section contains information of a general or explanatory nature that may be helpful, but not mandatory.)

6.1 Acquisition requirements. Acquisition documents should specify the following:

a. Title, number, and date of this specification.

b. Issue of DODISS to be cited in the solicitation, and if required, the specific issue of individual documents referenced (see 2.1).

c. Title, number, and date of the applicable specification sheet, and the complete PIN (see 3.1).

d. Required levels of preservation and packaging and packing, and special marking (see section 5).

Source: https://assist.dla.mil -- Downloaded: 2016-11-16T02:11Z
Check the source to verify that this is the current version before use.

e. Lead finish (see 3.5.1.1).

f. Retinning (hot solder dip), if required.

6.2 Qualification. With respect to products requiring qualification, awards will be made for products which are at the time set for opening bids, qualified for inclusion in the applicable qualified products list whether or not such products have actually been so listed by that date. The attention of the contractors is called to these requirement, and manufacturers are urged to arrange to have the products that they propose to offer to the Federal Government, tested for qualification, in order that they may be eligible to be awarded contracts or purchase orders for the products covered by this specification. The activity responsible for the qualified products list is the Space and Naval Warfare Systems Command; however, information pertaining to qualification of products may be obtained from the Defense Electronics Supply Center (DESC-EQP), 1507 Wilmington Pike, Dayton, Ohio 45444-5287, agent for administration of the Qualified Products List. Application for qualification tests shall be made in accordance with "Provisions Governing Qualification" (see 6.2.1).

6.2.1 Copies of SD-6, "Provisions Governing Qualification" may be obtained upon application to the Standardization Documents Order Desk, Building 4D, 700 Robbins Avenue, Philadelphia, PA 19111-5094.

6.3 Standard capacitor types. Equipment designers should refer to MIL-STD-198, for standard capacitor types and selected values chosen from this specification. MIL-STD-198 provides a selection of standard capacitors for new equipment design.

6.4 Shipments to Government activities. The packaging requirements of this specification are primarily intended for the preparation of capacitors for shipment to Government activities.

6.4.1 Shipments of ER capacitors to Government contractors and manufacturers' distributors. MIL-STD-1188 "Commercial Packaging of Supplies and Equipment", should be specified for the packaging of ER capacitors shipped to Government contractors and subcontractors and to category A and B distributors as defined in MIL-STD-790. The marking of the unit containers should not be required provided the intermediate containers are marked.

6.5 Intended use. These capacitors are intended for use in any equipment where known orders of reliability are required, and are primarily designed as a substitute for mica-dielectric capacitors as a step toward conservation of critical mica. They are effective substitutes for mica-dielectric capacitors and can be employed for many applications where mica-dielectric capacitors are used, provided consideration is given to the differences in temperature coefficient and dielectric loss. They are capable of withstanding environmental conditions of shock, vibration, acceleration, extreme moisture, vacuum, extended life of 30,000 hours and more, and high operating temperatures such as experienced in missile-borne and space electronic equipment.

6.6 Failure rate L. Failure rate L has been canceled from this specification.

6.7 PIN. The PIN shall be in the following form, and as specified (see 3.1).

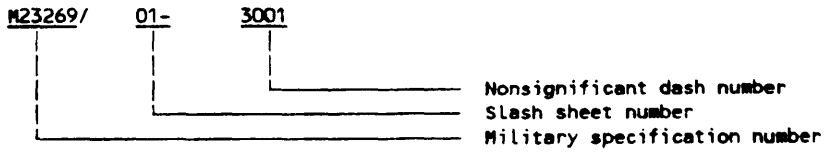

6.8 Subject term (key word listing).

Parts per million (ppm)
Statistical process control (SPC)

6.9 Changes from previous issue. Marginal notations are not used in this revision to identify changes with respect to the previous issue due to the extensiveness of the changes.

Source: https://assist.dla.mil -- Downloaded: 2016-11-16T02:11Z
Check the source to verify that this is the current version before use.

APPENDIX

PROCEDURE FOR QUALIFICATION INSPECTION

10. SCOPE

10.1 Scope. This appendix details the procedure for submission of samples, with related data, for qualification inspection of capacitors covered by this specification. This appendix is a mandatory part of the specification. The information contained herein is intended for compliance.

20. APPLICABLE DOCUMENTS. This section is not applicable to this appendix.

30. SUBMISSION

30.1 Sample.

30.1.1 Single-type submission. A sample consisting of 115 sample units of each type for which qualification is sought shall be submitted (see 30.1).

30.1.2 Combined submission. A sample consisting of 115 sample units of the highest capacitance value shall be submitted for each style for which qualification is sought. For those styles containing two dc voltage ratings, an equal number of sample units (58 each) shall be submitted representing the largest capacitance value for each dc voltage rating contained therein; for styles containing three dc voltage ratings, an equal number of sample units (58) shall be submitted representing the largest capacitance value for the two highest voltage ratings; the lowest voltage rating shall be represented by 115 sample units.

30.2 Materials, design, and construction. The supplier shall submit a detailed description of the materials, design, and constructional features of the capacitors submitted for qualification. After qualification has been granted, no change shall be made in the materials, design, or construction without prior approval of the qualifying activity.

30.3 Description of items. The manufacturer shall submit a detailed description of the capacitors being submitted for inspection, including materials, constructional features, and type of moisture-proofing coat at the seal, if any.

40. EXTENT OF QUALIFICATION

40.1 Single-type submission. Qualification within a style and dc voltage rating will be restricted to capacitance values equal to, or less than, those submitted. Qualification of the ±5 percent or closer capacitance tolerance automatically qualifies all other applicable capacitance tolerances.

40.2 Combined submission. Qualification of voltage ratings will be restricted to those submitted. Capacitance range and tolerances will be as specified in 40.1.

CONCLUDING MATERIAL

Custodians:
Army - ER
Navy - EC
Air Force - 85
NASA - NA

Review activities:
Air Force - 17
DLA - ES

User activities:
Navy - AS, CG, MC, OS, SH
Air Force - 19

Preparing activity:
Navy - EC

Agent:
DLA - ES

(Project 5910-1801)

Source: https://assist.dla.mil -- Downloaded: 2016-11-16T02:11Z
Check the source to verify that this is the current version before use.

requirements of this specification and the applicable specification sheet, the manufacturer shall remove the

STANDARDIZATION DOCUMENT IMPROVEMENT PROPOSAL

INSTRUCTIONS

1. The preparing activity must complete blocks 1, 2, 3, and 8. In block 1, both the document number and revision letter should be given.

2. The submitter of this form must complete blocks 4, 5, 6, and 7.

3. The preparing activity must provide a reply within 30 days from receipt of the form.

NOTE: This form may not be used to request copies of documents, nor to request waivers, or clarification of requirements on current contracts. Comments submitted on this form do not constitute or imply authorization to waive any portion of the referenced document(s) or to amend contractual requirements.

I RECOMMEND A CHANGE:	1. DOCUMENT NUMBER MIL-C-23269E	2. DOCUMENT DATE (930204)

3. DOCUMENT TITLE

CAPACITORS, FIXED, GLASS DIELECTRIC, ESTABLISHED RELIABILITY, GENERAL SPECIFICATION FOR

4. NATURE OF CHANGE (Identify paragraph number and include proposed rewrite, if possible. Attach extra sheets as needed.)

5. REASON FOR RECOMMENDATION

6. SUBMITTER

a. NAME (Last, First, Middle initial)	b. ORGANIZATION	
c. ADDRESS (Include Zip Code)	d. TELEPHONE (Include Area Code) (1) Commercial (2) AUTOVON (If applicable)	7. DATE SUBMITTED (YYMMDD)

8. PREPARING ACTIVITY

a. NAME Edward H. Back	b. TELEPHONE (Include Area Code) (1) Commercial (513) 296-6003 (2) AUTOVON 986-6003
c. ADDRESS (Include Zip Code) Commander, Defense Electronics Supply Center ATTN: DESC-EMM 1507 Wilmington Pike Dayton, OH 45444-5270	IF YOU DO NOT RECEIVE A REPLY WITHIN 45 DAYS, CONTACT: Defense Quality and Standardization Office 5203 Leesburg Pike, Suite 1403, Falls Church, VA 22041-3466 Telephone (703) 756-2340 AUTOVON 289-2340

Source: https://assist.dla.mil -- Downloaded: 2016-11-16T02:11Z
Check the source to verify that this is the current version before use.