INCH-POUND

MIL-STD-209H
28 JUNE 1991

SUPERSEDING
MIL-STD-209G
4 OCTOBER 1986

MILITARY STANDARD
SLINGING AND TIEDOWN PROVISIONS FOR LIFTING AND TYING DOWN MILITARY EQUIPMENT

INCH-POUND

AMSC N/A

FSC 2540

DISTRIBUTION STATEMENT A. APPROVED FOR PUBLIC RELEASE;
DISTRIBUTION IS UNLIMITED.

Source: https://assist.dla.mil -- Downloaded: 2016-12-10T23:41Z
Check the source to verify that this is the current version before use.

FOREWORD

1. This military standard is approved for use by all Departments and Agencies of the Department of Defense.

2. Comments (recommendations, additions, or deletions) and any pertinent data that may be beneficial to this document should be addressed to: Commander, Military Traffic Management Command Transportation Engineering Agency (MTMCTEA), ATTN: MTTE-TR, PO Box 6276, Newport News, VA 23606-0276.

3. This revision provides new design criteria for slinging and cargo tiedown provisions. It also provides test requirements for cargo tiedown provisions.

Source: https://assist.dla.mil -- Downloaded: 2016-12-10T23:41Z
Check the source to verify that this is the current version before use.

CONTENTS

Paragraph			Page
	1.	SCOPE	1
	1.1	Coverage	1
	1.1.1	Excluded equipment	1
	1.1.2	Military equipment for helicopter external air transport (EAT)	1
	1.1.3	Military equipment for airdrop	1
	1.2	Application	1
	1.3	Classification	1
	1.3.1	Slinging and tiedown provisions	1
	1.3.2	Equipment types	2
	1.4	Metric equivalents	2
	2.	APPLICABLE DOCUMENTS	2
	2.1	Government documents	2
	2.1.1	Specifications and standards	2
	2.1.2	Other Government documents, drawings, and publications	3
	2.2	Order of precedence	3
	3.	DEFINITIONS	3
	3.1	Slinging provision (class 1)	3
	3.2	Equipment tiedown provision (class 2)	3
	3.3	Multipurpose provision (class 3)	4
	3.4	Cargo tiedown provision (classes 4 and 5)	4
	3.5	Gross weight (GW)	4
	3.6	Set (permanent deformation)	4
	3.7	Static load	4
	3.8	Design limit load	4
	3.9	Yield load	4
	3.10	Ultimate load	4
	3.11	Helicopter external air transport	4
	3.12	Static lift test	4
	3.13	Helicopter flight-testing	4
	4.	GENERAL REQUIREMENTS	5
	4.1	Slinging, equipment tiedown, and multipurpose provisions (classes 1, 2, and 3 for types I, II, III, and IV equipment)	5
	4.1.1	Number	5
	4.1.2	Location	5
	4.1.2.1	All provisions	5
	4.1.2.2	Slinging provisions	5
	4.1.2.3	Equipment tiedown provisions	6
	4.1.2.4	Deviations	6
	4.1.3	Option for types III and IV equipment	6
	4.1.4	Classes 1, 2, 3, 4, and 5 provisions' surface	6

Source: https://assist.dla.mil -- Downloaded: 2016-12-10T23:41Z
Check the source to verify that this is the current version before use.

CONTENTS - Continued

		Page
4.2	Shackles	6
4.3	Hub attachments	6
4.4	Removable provisions	6
4.5	Cargo tiedown provisions (classes 4 and 5)	6
4.5.1	Number	6
4.5.2	Location	6
4.6	Freezing	7
4.7	Stowable slinging provisions	7
5.	DETAILED REQUIREMENTS	7
5.1	Strength of eyes and provisions	7
5.1.1	Class 1 slinging provisions	7
5.1.1.1	For equipment with helicopter EAT requirements	8
5.1.1.2	Crane lifting requirements	8
5.1.2	Class 2 tiedown provisions	8
5.1.3	Class 3 multipurpose provisions	9
5.1.4	Classes 4 and 5 cargo tiedown provisions	9
5.2	Provision dimensions	9
5.2.1	Classes 1, 2, and 3 slinging, tiedown, and multipurpose provisions	9
5.2.2	Class 4 cargo tiedown provisions	9
5.2.3	Class 5 cargo tiedown provisions	9
5.3	Directional capabilities of cargo tiedown provisions	10
5.3.1	Class 4 cargo tiedown provisions	10
5.3.2	Class 5 cargo tiedown provisions	10
5.4	Figures	10
5.5	Analysis and test considerations	10
5.5.1	General	10
5.5.2	Slinging provisions	10
5.5.3	Tiedown provisions	11
5.5.4	Multipurpose provisions	11
5.5.5	Cargo tiedown provisions	12
5.6.	Marking	12
5.6.1	Shipping dataplate	12
5.6.2	Identification	12
6.	NOTES	13
6.1	Intended use	13
6.2	Issue of DODISS	13
6.3	Data requirements	13
6.4	Tiedown system	13
6.5	Subject term (keyword) listing	13
6.6	International interest	13
6.7	Changes from previous issue	13

Source: https://assist.dla.mil -- Downloaded: 2016-12-10T23:41Z
Check the source to verify that this is the current version before use.

CONTENTS - Continued

Page

FIGURES

Figure	1.	Location of slinging provisions	15
	2.	Apex height	16
	3.	Sling leg clearance requirements	17
	4.	Working angles for tiedown provisions (type provision shown is for illustration only)	18
	5.	Classes 1, 2, and 3 openings and clearance dimensions for slinging and tiedown provisions on types I, II, III, and IV equipment	19
	6.	Examples of nonremovable, dual-purpose provisions	20
	7.	Examples of classes 4 and 5 cargo tiedown provisions	21
	8.	Included angle requirement	22
	9.	MIL-STD-209H free-body diagram	27
	10.	Example of a tiedown procedure	34

APPENDIXES

Appendix	A.	HELICOPTER EAT MATERIEL LIFT POINT LOAD FACTORS	23
Appendix	B.	SAMPLE PROBLEM FOR DETERMINING THE REQUIRED STRENGTH OF THE SLINGING PROVISIONS	25
Appendix	C.	SAMPLE PROBLEM FOR DETERMINING THE REQUIRED STRENGTH OF THE TIEDOWN PROVISIONS	33
Appendix	D.	CONVERSION TABLES	37

Source: https://assist.dla.mil -- Downloaded: 2016-12-10T23:41Z
Check the source to verify that this is the current version before use.

1. SCOPE

1.1 Coverage. This standard establishes dimensional limits, design considerations, positioning requirements, and strength requirements for slinging (to include helicopter external air transport (EAT)) and tiedown provisions for lifting or tying down tanks and other tracked vehicles, tactical wheeled vehicles, helicopters, and other military equipment shipped assembled or disassembled in unboxed or uncrated condition and for tying cargo or accessories to such equipment.

1.1.1 Excluded equipment. This standard excludes external provisions on cargo containers (for example, ISO containers, CONEXes, and MILVANs). It also excludes helicopter and aircraft cargo tiedown provisions.

1.1.2 Military equipment for helicopter external air transport (EAT). Although the design of the slinging provisions is covered in this standard, items of equipment requiring helicopter EAT certification must also meet the static lift and helicopter flight-test requirements of MIL-STD-913.

1.1.3 Military equipment for airdrop. Even though airdrop design criteria for military equipment are specified in MIL-STD-814, Requirements for Tiedown, Suspension, and Extraction Provisions on Military Materiel for Airdrop, equipment must also be transported by surface modes. Therefore, slinging and tiedown provisions for airdrop-designed equipment shall meet both the requirements of this standard and MIL-STD-814.

1.2 Application. This standard applies to the following:

a. All new developmental, nondevelopmental, military-adapted commercial items, and reprocurements as noted above.

b. Modified equipment, when the modifications result in changes to slinging or tiedown requirements (for example, provision relocation or item weight increase).

1.3 Classification.

1.3.1 Slinging and tiedown provisions. Slinging and tiedown provisions are classified as follows:

Class 1. Slinging provisions.

Class 2. Equipment tiedown provisions, including supplementary points of tiedown.

Class 3. Multipurpose provisions.

Class 4. Cargo tiedown provisions provided within cargo compartments.

Class 5. Cargo tiedown provisions provided for cargo platforms of flatbed trailers and flatracks used as demountable truck and trailer beds.

Source: https://assist.dla.mil -- Downloaded: 2016-12-10T23:41Z
Check the source to verify that this is the current version before use.

1.3.2 Equipment types. Equipment shall be classified as follows:

Type I. Combat vehicles (for example, armored carriers, self-propelled artillery, tanks, and recovery vehicles).

Type II. Tactical and support vehicles (for example, semitrailers, trailers, trucks, materials handling equipment, construction equipment, modified commercial equipment, support vehicles, and other vehicles).

Type III. Support vehicles (standard commercial equipment, such as construction equipment, materials handling equipment, trucks, and other vehicles).

Type IV. Other military equipment, including helicopters, shipped unboxed or uncrated and lifted separately, each as an individual unit.

1.4 Metric equivalents. Metric equivalents shall conform to FED-STD-376. Conversion tables are in appendix D.

2. APPLICABLE DOCUMENTS

2.1 Government documents.

2.1.1 Specifications and standards. The following specifications and standards form a part of this document to the extent specified herein. Unless otherwise specified, the issues of these documents are those listed in the issue of the Department of Defense Index of Specifications and Standards (DODISS) and supplement thereto cited in the solicitation (see para 6.2).

SPECIFICATIONS

Federal

RR-C-271	Chain and Attachments, Welded and Weldless.

Military

MIL-P-514	Plates, Identification, Instruction and Marking, Blank.
MIL-P-15024/9	Aircraft Loading Dataplate.

STANDARDS

Federal

FED-STD-376	Preferred Metric Units for General Use by the Federal Government.

Military

MIL-STD-810	Environmental Test Methods and Engineering Guidelines.

Source: https://assist.dla.mil -- Downloaded: 2016-12-10T23:41Z
Check the source to verify that this is the current version before use.

MIL-STD-913	Requirements and Procedures for the Certification of Externally Transported Military Equipment by Department of Defense Rotary Wing Aircraft.
MIL-STD-1791	Designing for Internal Aerial Delivery in Fixed Wing Aircraft.

(Unless otherwise indicated, copies of federal and military specifications and standards are available from the Standardization-Documents Orders Desk, Building 4D, 700 Robbins Avenue, Philadephia, PA 19111-5094.)

2.1.2 Other Government documents, drawings, and publications. The following documents form a part of this document to the extent specified herein. Unless otherwise indicated, the issues are those cited in the solicitation.

DODISS	Department of Defense Index of Specifications and Standards.

Joint Military

AR 70-44/OPNAVINST 4600.22/AFR 80-18/MCO 4610.14/DLAR 4500.25 - Research and Development, DOD Engineering for Transportability.

Code of Federal Regulations (CFRs)

CFR Title 49 - Transportation

(Copies of the DODISS are available on a yearly subscription basis from the Superintendent of Documents, US Government Printing Office, Washington, DC 20402. A microfiche copy of the DODISS is available from the Standardization Documents Orders Desk. AR 70-44 and CFR Title 49 can be obtained from the US Government Printing Office.)

2.2 Order of precedence. In the event of a conflict between the text of this standard and the references cited herein, the text with the most severe requirements shall take precedence.

3. DEFINITIONS

3.1 Slinging provision (class 1). An integral part of the equipment, commonly called a padeye, lug, eye, or lifting attachment, which may include a nonremovable shackle or ring. A slinging provision provides a means of attaching a shackle or hook to the equipment for safe lifting.

3.2 Equipment tiedown provision (class 2). An integral part of an item, commonly called a tiedown eye, fixture, attachment, or provision, which may include a nonremovable shackle or ring. A tiedown provision has an opening for attaching a shackle, hook, and tiedown cable or chain to the equipment for tiedown purposes during shipment.

Source: https://assist.dla.mil -- Downloaded: 2016-12-10T23:41Z
Check the source to verify that this is the current version before use.

3.3 Multipurpose provision (class 3). A single provision that meets the requirements of this standard for both slinging and equipment tiedown.

3.4 Cargo tiedown provision (classes 4 and 5). A padeye, attachment, or provision, integral to the transporting media, for securing cargo or accessories.

3.5 Gross weight (GW). The weight of the basic equipment plus the weight of any associated support items of equipment and cargo attached to, contained within, or projected as payload for the equipment (for example, shelters). For light tactical vehicles, crew weight is considered as payload. The weight of ammunition, fuel, water, and lubricants necessary to render a system combat ready is also considered as payload.

3.6 Set (permanent deformation). Any permanent change in the original dimensions or shape of the slinging or tiedown provision resulting from an applied force.

3.7 Static load. The anticipated maximum resultant load imposed on the eye or other slinging provision when an item, at GW, is suspended in a specified slinging configuration without movement.

3.8 Design limit load. The applied force (static load times the load factor (LF)), or maximum probable force, that a slinging or tiedown provision, including its connecting structural members, can withstand when subjected to its most severe transport environment. This load must be less than the yield load.

3.9 Yield load. The force at which a slinging or tiedown provision, including its connecting structural members, exhibits a permanent deformation or set.

3.10 Ultimate load. The force (not less than the design limit load times 1.5) a slinging or tiedown provision, including its connecting structural members, can sustain without breaking or rupturing.

3.11 Helicopter external air transport. A mode of transportation by which an item(s) is suspended beneath a rotary wing aircraft for the purpose of transporting the item(s).

3.12 Static lift test. A test consisting of rigging the item in the EAT configuration and statically lifting the item to verify the rigging configuration and identify clearance problems.

3.13 Helicopter flight-testing. A test consisting of flying the item(s) in its EAT rigging configuration, using military aircraft. This test is used to verify stability during flight and that the item can withstand the dynamic forces induced by flight.

Source: https://assist.dla.mil -- Downloaded: 2016-12-10T23:41Z
Check the source to verify that this is the current version before use.

4. GENERAL REQUIREMENTS

4.1 Slinging, equipment tiedown, and multipurpose provisions (classes 1, 2, and 3 for types I, II, III, and IV equipment).

4.1.1 Number. Types I and II vehicles within the scope of this standard shall have four multipurpose provisions. If specified in the equipment specifications, four slinging provisions and four tiedown provisions or a combination of multipurpose, slinging, and tiedown provisions may be provided. Types III and IV equipment shall have four multipurpose provisions or four slinging provisions and a minimum of four tiedown provisions or a combination of multipurpose, slinging, and tiedown provisions; or, if specified in the equipment specifications, the options in paragraph 4.1.3 may be provided. If vehicles or equipment are sectionalized for shipping, these requirements shall apply to each section and to the vehicle when assembled.

4.1.2 Location.

4.1.2.1 All provisions. All provisions shall be located so that:

a. Not less than 1 inch of clearance shall be maintained between the sling cables and chains, tiedown cables and chains, or the textile portion of helicopter slings and the equipment, except when a structure (such as an overhead guard, tracks, tanks attached to the chassis, and so forth), specified by the contractor, has strength to withstand contact with the sling or cable without permanent deformation of any part of the equipment, and contact will not adversely affect the sling or cable.

b. Provisions do not interfere with the functioning of the equipment.

c. Increase in equipment square or cubage is minimized.

d. Maximum accessibility to the provision or point is maintained.

4.1.2.2 Slinging provisions. Slinging provisions shall be located so that:

a. All slinging provisions provide dynamic stability during crane lifting and helicopter EAT. Slinging provisions should be located above the center of gravity (CG). If this is not possible, slinging provisions shall be located so the line connecting adjacent slinging provisions is located outside a 120° cone formed with the apex at the CG and its axis of rotation about the vertical axis (fig 1).

b. The attached sling apex does not exceed a height of 24 feet above the lowest extremity of the equipment when suspended, with each sling leg at the maximum 45° true angle (fig 2).

c. The slinging provisions allow at least a 1-inch clearance between the sling leg and any part of the item of equipment. The 1-inch sling leg clearance should exist when the sling leg vertical angle is 0° to 45° toward the central apex (fig 3).

Source: https://assist.dla.mil -- Downloaded: 2016-12-10T23:41Z
Check the source to verify that this is the current version before use.

Spreader bars, when required, should be integral in the design of the equipment. Spreader bars not integral to the system shall not be used unless specified in the new equipment specification. Stowage provisions must be provided to ensure the spreader bars stay with the item.

4.1.2.3 Equipment tiedown provisions. Tiedown provisions shall be located in the elevation view so that the tiedown legs may be placed anywhere from vertically downward to 45° from the vertical and, in the plan view, 90° to either side of the principal direction of the tiedown provision (fig 4). Tiedown provisions shall be located so as to restrain the weight of all structural members above the chassis of wheeled vehicles or on the hull of tracked vehicles. If possible, tiedown points on the equipment should be located symmetrically about the vehicle or item of equipment, higher than the CG, swivel 360°, and rotate 180°. Tiedown provisions shall be located such that cables are not required to go under the vehicle to restrain the item.

4.1.2.4 Deviations. Modifications or special considerations that deviate from the above requirements shall be directed to the appropriate Service transportability agent. The designated agents are listed in joint regulation AR 70-44/OPNAVINST 4600.22/AFR 80-18/MCO 4610.14/DLAR 4500.25.

4.1.3 Option for types III and IV equipment. If types III and IV equipment do not have class 1, 2, or 3 provisions, the contractor shall specify, to the materiel developer, points to be used for slinging and tiedown. The selected points shall meet the requirements in sections 4 and 5 of this standard. If holes are used as tiedown provisions, they shall be formed in the main structural members and shall conform to figure 5.

4.1.4 Classes 1, 2, 3, 4, and 5 provisions' surface. The material edges shall be rounded, or chamfered, and smooth to prevent cutting of the sling or tiedown cables.

4.2 Shackles. When required as slinging and tiedown provisions, shackles shall conform to RR-C-271, Type IVA, class 3.

4.3 Hub attachments. Hubs shall not be designed for or used as slinging or tiedown points.

4.4 Removable provisions. Provisions that can be removed without the use of tools shall not be used. A tiedown or slinging provision that doubles as another device, such as a towing provision, shall not be used if the secondary function requires removal of the shackle or ring. Figure 6 shows examples of tiedown/towing provisions that do not require removal of the shackle/ring.

4.5 Cargo tiedown provisions (classes 4 and 5).

4.5.1 Number. The number of cargo tiedown provisions shall be determined by the design and size of the cargo compartment or platform; however, no cargo compartment or platform shall have fewer than four provisions.

4.5.2 Location.

a. Class 4 tiedown provisions shall be recessed inside van-type vehicles and the cargo compartment of trucks and trailers (with metal-stake

Source: https://assist.dla.mil -- Downloaded: 2016-12-10T23:41Z
Check the source to verify that this is the current version before use.

bodies). Spacing of provisions shall be about 18 inches on center along each side and end of the cargo body of the vehicle, with spacing between provisions adjusted as necessary to avoid vehicle structural members. Provisions on the side and end walls of cargo bodies shall be as close to the floor of the cargo body as practical. The center of the side and end tiedown provisions shall be not more than 6 inches nor less than 4 inches from each of the four corners of the cargo bed/wall.

b. Class 5 tiedown provisions shall be located on the perimeter of the cargo bed so as not to increase the dimensions of the bed. Spacing of provisions shall be about 18 inches on center along each side of the vehicle, with spacing between provisions adjusted as necessary to avoid vehicle structural members. The center of side and end tiedown provisions shall be located not more than 6 inches nor less than 4 inches from each of the four corners of the cargo bed/bulkhead.

4.6 Freezing. All slinging, tiedown, and cargo tiedown provisions shall be designed to prevent the movable parts from freezing in place during cold weather. (Drain holes shall meet the requirements of CFR Title 49 for ammunition shipments.)

4.7 Stowable slinging provisions. "Hideaway" provisions, which are nonremovable parts of the equipment and can be stowed out of the way, are acceptable where other types of slinging eyes would interfere with loading and unloading of cargo. The contractor shall provide instructions for the servicing of the retracting mechanism.

5. DETAILED REQUIREMENTS

5.1 Strength of eyes and provisions. The LFs in this section have been established to account for the dynamic loads likely to be encountered during highway, rail, marine, and air transport. LFs have been adopted for reasons of simplicity, convenience, economy in testing, and repeatability of test procedures and results. However, since statically applying the LFs cannot precisely reproduce the effects of many of the actual dynamic loads found in operation, factors such as characteristics of load application, load repetition, load reversal, and equipment life must be considered in the design process. The designer must also determine the amount, if any, by which the provision should exceed the design requirements of this section. Allowances should be made for the physical and chemical properties of the material (for example, fatigue, corrosion and galvanic action on account of dissimilar metals and harsh environments), and for normal wear and tear during the expected life of the equipment.

5.1.1 Class 1 slinging provisions. Equipment with helicopter EAT requirements shall meet the requirements of paragraphs 5.1.1.1 and 5.1.1.2. All other equipment shall meet the requirements of paragraph 5.1.1.2. Slinging provisions shall meet the requirements of paragraphs 5.1.1.1 and 5.1.1.2 at the item of equipment's GW. If the GW of the item of equipment exceeds the helicopter's lift capability, but can be reduced in weight to fall within the helicopter's lift capability, the GW (for para 5.1.1.1 only) will be based on the helicopter's maximum lift capability.

Source: https://assist.dla.mil -- Downloaded: 2016-12-10T23:41Z
Check the source to verify that this is the current version before use.

5.1.1.1 For equipment with helicopter EAT requirements. Each class 1 provision, including the connection to the structural member(s), shall meet the following requirements:

a. A design limit load of not less than the lift point LF taken from appendix A times the static load. The static load is determined by a static test(s), based on use of the specified helicopter external cargo sling set(s), or by mathematical analysis. A sample problem that shows how to determine the required strength of the slinging provisions is in appendix B.

b. An ultimate load of not less than 1.5 times the design limit load.

c. The slinging provisions shall be tested for validation in accordance with paragraph 5.5 of this standard.

d. Equipment with a helicopter EAT requirement shall also meet MIL-STD-913.

5.1.1.2 Crane lifting requirements. Each class 1 provision, including the connection to the structural member(s), shall meet the following requirements:

a. A design limit load of not less than 2.3 times the static load. The static load is determined by static test or by mathematical analysis, based on the sling legs converging at the apex to form 45° vertical angles, or on sling legs with lengths not longer than 12 feet, whichever is less severe, when the item is suspended in a level attitude. A sample problem showing how to determine the required strength of the slinging provisions is in appendix B.

b. An ultimate load of not less than 1.5 times the design limit load.

c. The slinging eyes or provisions shall be tested for validation in accordance with paragraph 5.5 of this standard.

5.1.2 Class 2 tiedown provisions. Each class 2 provision, including the connection and the structural frame, shall withstand its proportionate share of the following loadings: 4.0 times the GW in the forward and aft direction of the longitudinal axis of the equipment, 2.0 times the GW in the downward direction of the vertical axis, and 1.5 times the GW in each direction of the lateral axis. These inertial forces (loadings) shall be applied statically and independently. The directional load (design limit load in each direction) shall be distributed among the tiedown eyes or provisions that would effectively resist motion along that axis. Distribution of the load among the tiedown provisions shall be based on the tiedown procedures used to meet MIL-STD-810, Method Number 516.4, Procedure VIII, and MIL-STD-1791. A sample problem that shows how to determine the required strength of the tiedown provisions is in appendix C. No permanent deformation or set of the provision or other equipment structural components shall occur as a result of application of the loads to the tiedowns. The ultimate load that each tiedown eye or provision can withstand shall be at least 1.5 times the design limit load.

Source: https://assist.dla.mil -- Downloaded: 2016-12-10T23:41Z
Check the source to verify that this is the current version before use.

5.1.3 Class 3 multipurpose provisions. Each class 3 provision shall meet the requirements of both slinging and tiedown provisions in paragraphs 5.1.1 and 5.1.2.

5.1.4 Classes 4 and 5 cargo tiedown provisions.

a. Each class 4 provision shall withstand the forces in the table below in the vertical, longitudinal, and lateral directions:

TABLE I. Load requirements for class 4 provisions.

	lb	lb	lb
Load-carrying range of equipment	0 - 3,000	3,001 - 10,000	more than 10,000
Load-carrying capacity (design load) of each tiedown provision	2,500	5,000	10,000

The ultimate load each cargo tiedown provision can withstand shall not be less than 1.5 times the design limit load.

b. Each class 5 provision shall withstand a force of 15,000 pounds in the vertical, longitudinal, and lateral directions without exceeding the design limit load. If the flatbed trailer or flatrack is issued with basic issue item tiedown assemblies (chains, load binders, shackles, and so forth) with a safe working load greater than 15,000 pounds, the design limit load of the class 5 provision shall meet or exceed the safe working load of the tiedown assemblies (Title 49 CFR 393.102). The ultimate load that each cargo tiedown provision can withstand shall not be less than 1.5 times the design limit load.

5.2 Provision dimensions.

5.2.1 Classes 1, 2, and 3 slinging, tiedown, and multipurpose provisions. Classes 1, 2, and 3 provisions shall conform to the dimensions specified in figure 5.

5.2.2 Class 4 cargo tiedown provisions. Class 4 provisions shall have openings of not less than 2 inches (51 mm) in diameter and shall have a thickness of not greater than three-fourths of an inch (19.0 mm). The provisions shall have the capability to accept 2-inch steel banding without causing tearing of the banding. An example of an acceptable class 4 tiedown is shown in figure 7.

5.2.3 Class 5 cargo tiedown provisions. Class 5 provisions shall have openings of not less than 2 inches (51 mm) in diameter and shall have a thickness of not greater than 1 inch (25 mm). The provisions shall have the capability to accept 2-inch steel banding without causing tearing of the banding. An example of an acceptable class 5 tiedown is shown in figure 7.

Source: https://assist.dla.mil -- Downloaded: 2016-12-10T23:41Z
Check the source to verify that this is the current version before use.

5.3 Directional capabilities of cargo tiedown provisions.

5.3.1 Class 4 cargo tiedown provisions. Class 4 provisions shall permit the cargo ring to rotate a minimum of 180° and have an included angle of lateral movement of not less than 150° (fig 8). If possible, the provisions shall be designed to swivel to meet the included angle requirement.

5.3.2 Class 5 cargo tiedown provisions. Class 5 provisions shall have an included angle of lateral movement of not less than 90° (fig 8) and rotate a minimum of 90° from the vertical toward the longitudinal centerline of the vehicle. If possible, the provisions shall be designed to swivel to meet the included angle requirement.

5.4 Figures. Illustrations are not intended to preclude requirements that are otherwise specified in this standard.

5.5 Analysis and test considerations.

5.5.1 General. All slinging, tiedown, and cargo tiedown provisions shall be tested attached to the equipment. Testing may be accomplished using a frame assembly, provided all load-bearing structures (structural components in tension and compression) are included in the frame assembly. For test purposes, only wire rope, wire rope with a thimble loop, chain, or a shackle attached to the provision shall be used. Textile straps, such as nylon and polyester (Dacron) and synthetic ropes, shall not be used. The loads applied during testing shall not be less than the design limit load requirement and not more than 10 percent in excess.

5.5.2 Slinging provisions.

a. Prior to First Article, Preproduction Qualification, or Production Proveout testing, the contractor shall provide, to the materiel developer, design limit and ultimate loads for the provisions to show they meet the slinging requirements of section 5.

b. The analysis and testing shall meet the following requirements:

(1) A static pull to the required design limit load shall be conducted on all provisions; however, all provisions do not have to be tested at the same time.

(2) The angles and loads shall coincide with the procedures shown in appendix B or by static lift in accordance with paragraphs 5.1.1.1 and 5.1.1.2.

(3) The points used to apply the load to the equipment shall be located so they do not interfere with or reduce the loading on the structural member next to the provisions.

(4) Loads in the sling legs shall be measured with an appropriate measuring device, such as a load cell or dynamometer.

(5) The load applied to each provision shall be not less than the required design limit load and shall be applied for not less than 90 seconds. (Note: For helicopter transport, the required design limit load will be based on the highest LF required in app A.)

Source: https://assist.dla.mil -- Downloaded: 2016-12-10T23:41Z
Check the source to verify that this is the current version before use.

(6) No visible permanent deformation or set in the provision or other equipment structural components shall result from application of the loads to the provisions. A possible failure indication during the initial material analysis shall be justification to use more detailed analysis and testing methods (for example, calibrated measurements, finite element analysis, magnetic particle inspection, x ray, fatigue testing, ultimate testing, and so forth). When measuring devices are used, deformation shall not exceed a 0.2 percent offset. Weld cracks will constitute test failure.

(7) The contractor shall provide a material analysis showing the ultimate load is not less than 1.5 times the required design limit load for the provisions.

5.5.3 Tiedown provisions.

a. Prior to First Article, Preproduction Qualification, or Production Proveout testing, the contractor shall provide, to the materiel developer, design limit and ultimate loads for the provisions to show they meet the tiedown requirements of section 5.

b. The analysis and testing shall meet the following requirements:

(1) A static pull to the required design limit load shall be conducted on all tiedown provisions; however, all provisions do not have to be tested at the same time.

(2) Loads applied to each provision shall be measured with an appropriate measuring device, such as a load cell or dynamometer.

(3) The points used to apply the load to the equipment shall be located so they do not interfere with or reduce the loading on the structural member next to the tiedown provisions.

(4) Loads applied in the longitudinal, vertical, and lateral directions shall be applied statically and independently for not less than 6.0 seconds and shall be not less than the required load in each direction.

(5) No visible permanent deformation or set in the provisions or other equipment structural components shall result from application of the loads to the provisions. A possible failure indication during the initial material analysis shall be justification to use more detailed analysis and testing methods (for example, calibrated measurements, finite element analysis, magnetic particle inspection, x ray, fatigue testing, ultimate testing, and so forth). When measuring devices or gauges are used, deformation cannot exceed a 0.2 percent offset. Weld cracks will constitute test failure.

(6) The contractor shall provide a material analysis showing the ultimate load is not less than 1.5 times the required design limit load for the provisions.

5.5.4 Multipurpose provisions. These provisions shall meet the analysis and test requirements of paragraphs 5.5.2 and 5.5.3.

Source: https://assist.dla.mil -- Downloaded: 2016-12-10T23:41Z
Check the source to verify that this is the current version before use.

5.5.5. Cargo tiedown provisions.

a. Prior to First Article, Preproduction Qualification, or Production Proveout testing, the contractor shall provide, to the materiel developer, design and ultimate loads for the provisions to show they meet the tiedown requirements of section 5.

b. The analysis and testing shall meet the following requirements:

(1) A static pull to the required design limit load shall be conducted on a selected sample of cargo tiedown provisions. Selection will be based on difference in provision design.

(2) Loads applied to each provision shall be measured with a measuring device, such as a load cell.

(3) The points used to apply the load to the equipment shall be located so they do not interfere with or reduce the loading on the structural member next to the cargo tiedown provision.

(4) Loads applied in the vertical, longitudinal, and lateral directions shall be applied statically and independently for not less than 6.0 seconds and shall be not less than the required design limit load in each direction.

(5) No visible permanent deformation or set in the provisions or other equipment structural components shall result from application of the loads to the provisions. A possible failure indication during the initial material analysis shall be justification to use more detailed testing and analysis methods (for example, calibrated measurements, finite element analysis, magnetic particle inspection, x ray, fatigue testing, ultimate testing, and so forth). When measuring devices are used, deformation shall not exceed a 0.2 percent offset. Weld cracks will constitute test failure.

(6) The contractor shall provide a material analysis showing the ultimate load is not less than 1.5 times the required design limit load for the provisions.

5.6 Marking.

5.6.1 Shipping dataplate. A shipping dataplate shall be furnished and shall conform to MIL-P-514 and MIL-P-15024/9. The silhouette of the equipment in transport configuration, which indicates the CG along each axis, location of the slinging and primary tiedown provisions, and the location of any alternate or supplementary points of tiedown shall be included on the dataplate. Nomenclature characters shall not be less than 0.187 inch (4.75 mm), and other characters shall not be less than 0.093 inch (2.36 mm) in height. The dataplate shall be attached by screws, bolts, or rivets in a conspicuous location.

5.6.2 Identification. The identification of slinging, tiedown, or multipurpose provisions used for transport shall be stenciled in appropriate locations on the exterior of the equipment in letters not less than 1 inch (25 mm) in height. Interior cargo tiedown provisions do not have to be marked. Accessories resembling provisions unsuitable for slinging or tiedown shall be located or designed to avoid mistaken use and marked as unacceptable for slinging or tiedown.

Source: https://assist.dla.mil -- Downloaded: 2016-12-10T23:41Z
Check the source to verify that this is the current version before use.

6. NOTES

(This section contains information of a general or explanatory nature that may be helpful, but is not manadatory.)

6.1 Intended use. This standard covers the design and testing of slinging, tiedown, and cargo tiedown provisions.

6.2 Issue of DODISS. When this standard is used in acquisition, the issue of the DODISS applicable to the solicitation must be cited (para 2.1.1 and 2.1.2).

6.3 Data requirements. When this standard is applied on a contract, the following data item description (DID) must be listed, as applicable, on the Contract Data Requirement List (DD Form 1423), except where DOD FAR Supplement 27.475-1 exempts the requirement for a DD Form 1423.

Reference Paragraphs	DID Number	DID Title
5.5.2, 5.5.3, and 5.5.5	DI-PACK-80880	Transportability Report

6.4 Tiedown system. If a proposed rail tiedown procedure differs from that represented in MIL-STD-810, the materiel developer shall notify MIMCTEA prior to testing.

6.5 Subject term (keyword) listing.

Cables and chains, sling	Provision, cargo tiedown
Cables and chains, tiedown	Provision, multipurpose
Crane lifting	Provision, slinging
Eyes, slinging	Pull test
Eyes, tiedown	Spreader bars
Helicopter EAT	Static lift test

6.6 International interest. Certain provisions of this standard are the subject of international standardization agreements (QSTAG-328, ASCC Air Standard 44/21, STANAG-4062, and STANAG-3548). When an amendment, a revision, or a cancellation of this standard is proposed that will modify the international agreement concerned, the preparing activity will take appropriate action through international standardization channels, including departmental standardization offices, to change the agreement or make other appropriate accommodations.

6.7 Changes from previous issue. Marginal notations are not used in this revision to identify changes with respect to the previous issue on account of the extensiveness of the changes.

Source: https://assist.dla.mil -- Downloaded: 2016-12-10T23:41Z
Check the source to verify that this is the current version before use.

Custodians:
Army - MT
Navy - YD
Air Force - 11

Preparing activity:
Army - MT

Project No. 2540-0374

Review activities:
Army - GL, SM, MI, ME, ER, TE, AT, AR
Navy - MC
Air Force - 84, 99
DLA - CS

User activities:
Army - AV
Navy - SA

Source: https://assist.dla.mil -- Downloaded: 2016-12-10T23:41Z
Check the source to verify that this is the current version before use.

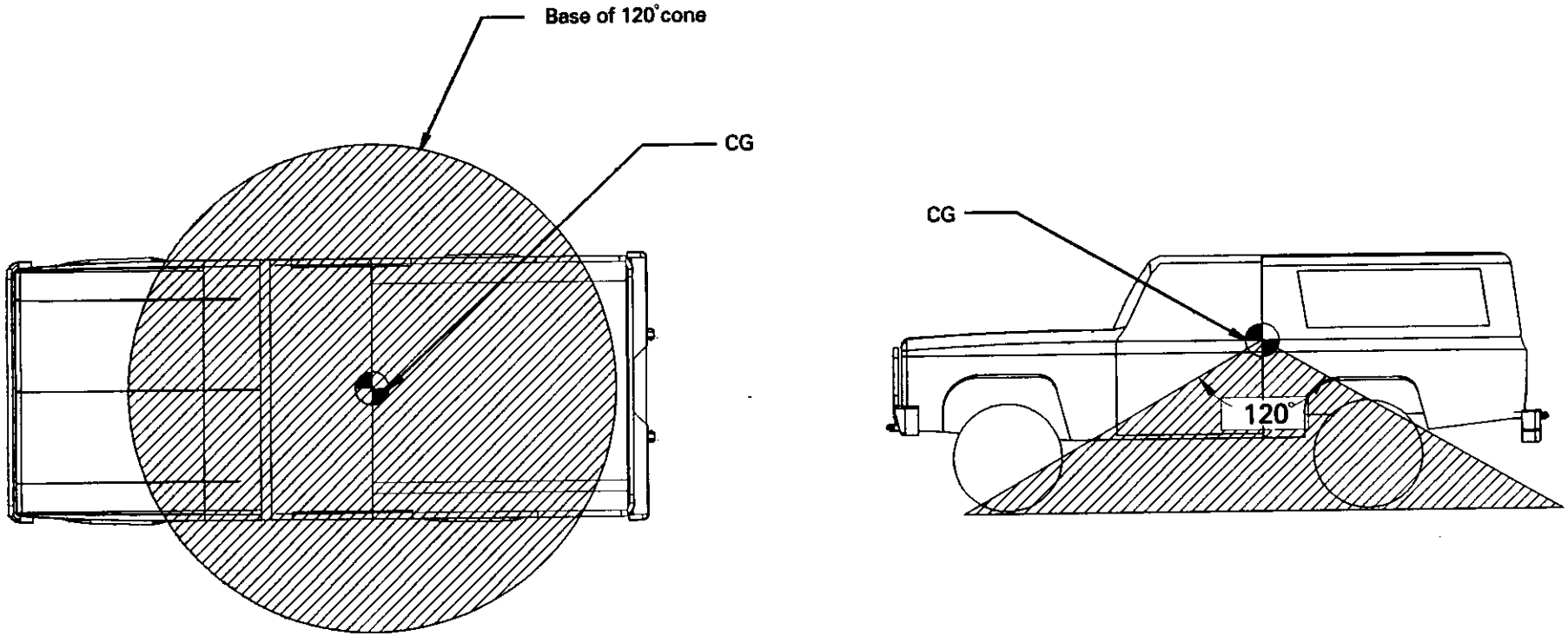

NOTE: Locate slinging provisions outside shaded area.

FIGURE 1. Location of slinging provisions.

Source: https://assist.dla.mil -- Downloaded: 2016-12-10T23:41Z
Check the source to verify that this is the current version before use.

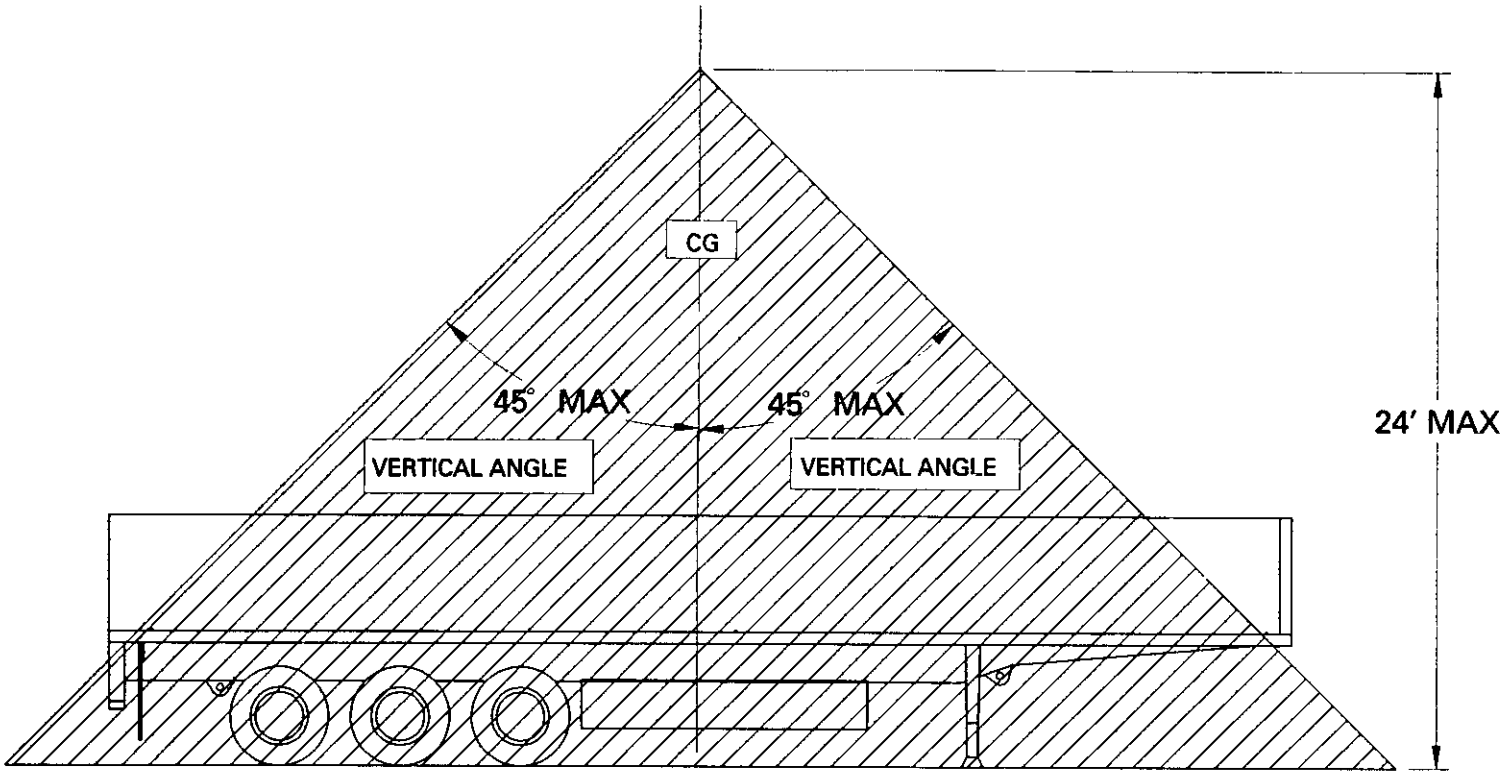

NOTE: The 24-foot maximum apex height is based on the NATO required lifting clearance for shipboard loading.

FIGURE 2. Apex height.

Source: https://assist.dla.mil -- Downloaded: 2016-12-10T23:41Z
Check the source to verify that this is the current version before use.

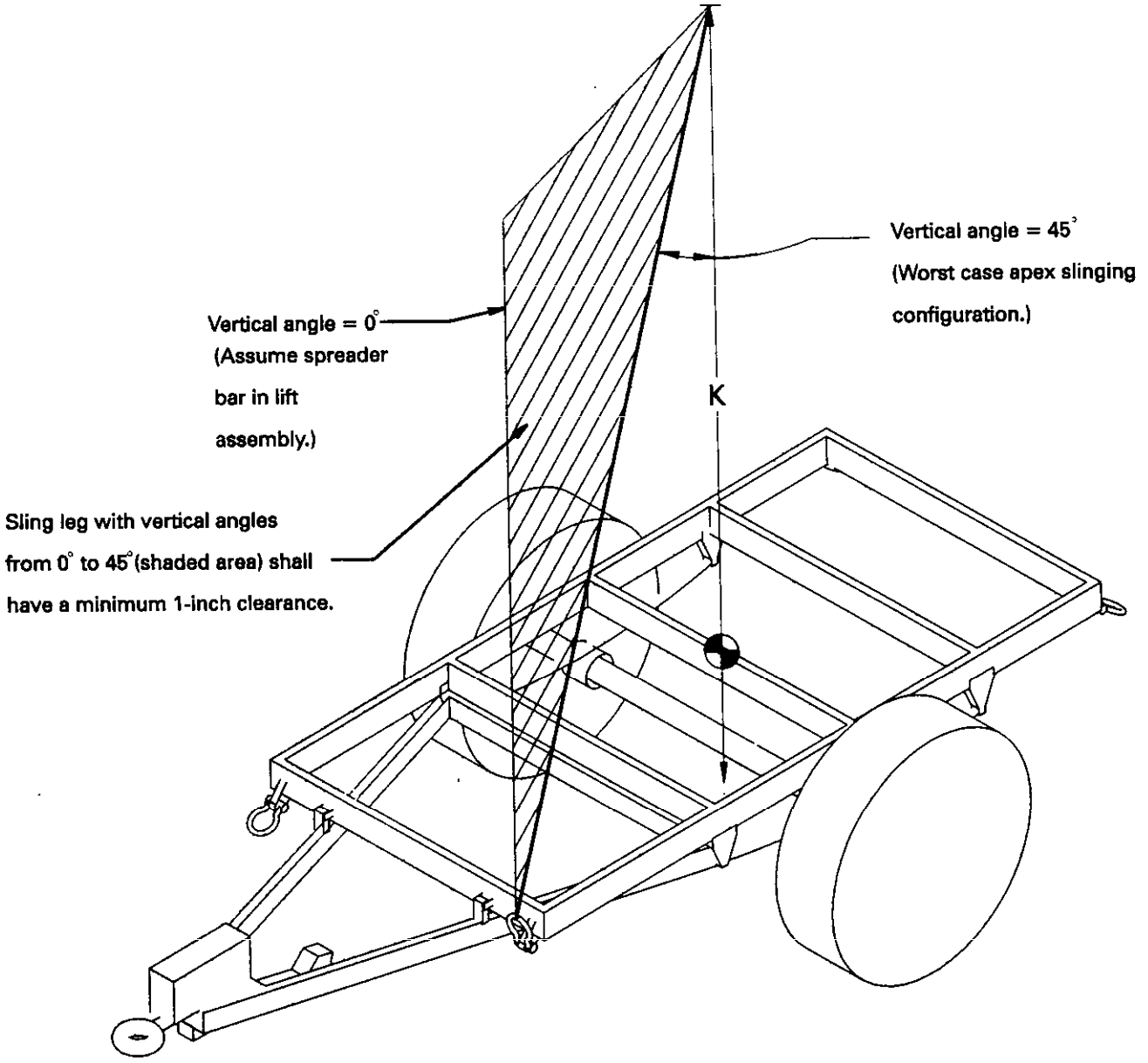

FIGURE 3. Sling leg clearance requirements.

Source: https://assist.dla.mil -- Downloaded: 2016-12-10T23:41Z
Check the source to verify that this is the current version before use.

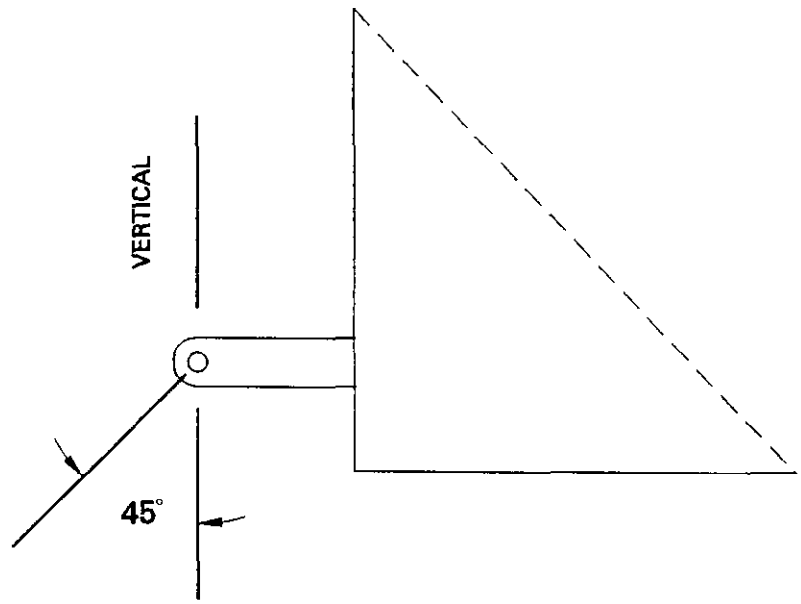

ELEVATION VIEW

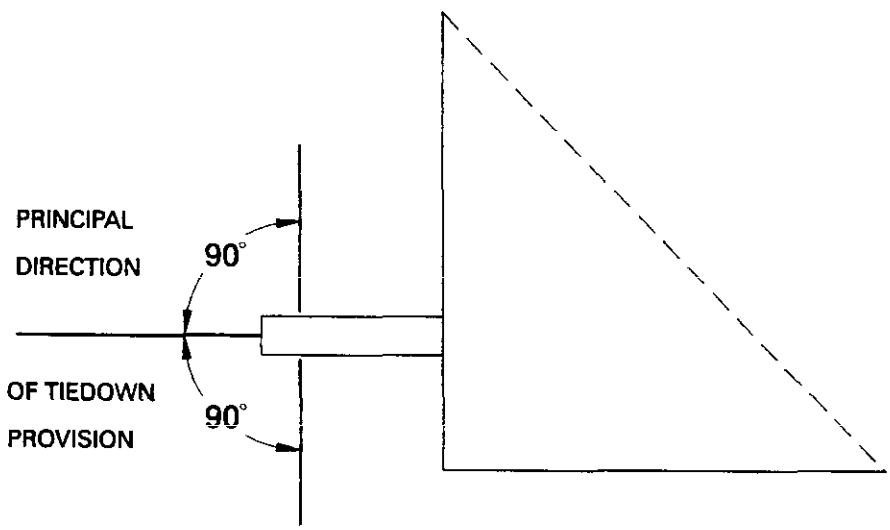

PLAN VIEW

FIGURE 4. Working angles for tiedown provisions (type provision shown is for illustration only).

Source: https://assist.dla.mil -- Downloaded: 2016-12-10T23:41Z
Check the source to verify that this is the current version before use.

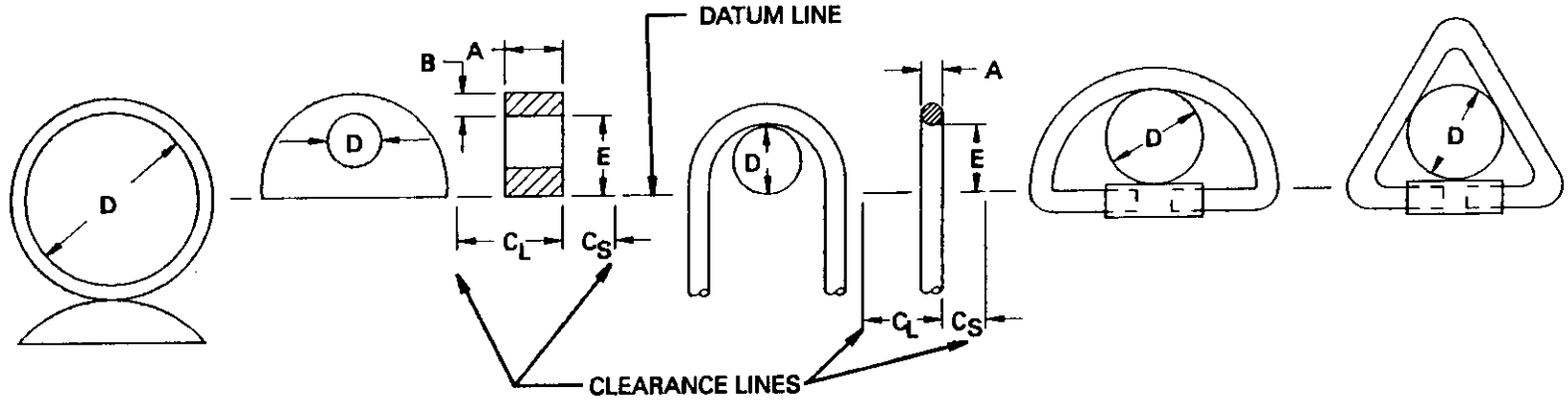

TABLE I. Design criteria for classes 1, 2, and 3 provisions.

WEIGHT RANGE ON EQUIPMENT		DIMENSIONS IN INCHES AND MILLIMETERS*															
		A MAX		B MAX		C_L MIN**		C_S MIN**		D MAX		D MIN		E MAX		E MIN	
LB	KILO-GRAMS	IN	MM	IN	MM	IN	MM	IN	MM	IN	MM	IN	MM	IN	MM	IN	MM
0 to 11,200	5,080	1	25	1	25	7	178	3	76	3.2	76	3	76	5	127	3	76
11,200 to 22,400	10,160	1.5	38	1.125	29	9	229	4	102	3.5	89	3	76	5	127	3	76
22,400 to 49,280	22,353	2	51	1.5	38	12	305	5	127	3.5	89	3	76	5	127	3.5	89
49,280 to 100,800	45,722	2	51	1.5	38	16	406	7	179	4	102	3.5	89	6	152	5	127
100,800 and greater	66,043	2.5	64	2	51	20	508	8	203	5	127	4	102	6	152	5.5	139

* Millimeter conversions are rounded off to nearest whole number.
** There shall be no interference or obstruction within the dimensions C_L and C_S that could interfere with engaging a shackle and pin in the eye. Either side of the eye may be used as the datum from which to measure C_L and C_S.

NOTE: Eyes may be designed to swivel or rotate. When provisions are designed to swivel or rotate, dimension D_{min} shall be met throughout the full range of motion.

FIGURE 5. Classes 1, 2, and 3 openings and clearance dimensions for slinging and tiedown provisions on types I, II, III, and IV equipment.

Source: https://assist.dla.mil -- Downloaded: 2016-12-10 23:41Z
Check the source to verify that this is the current version before use.

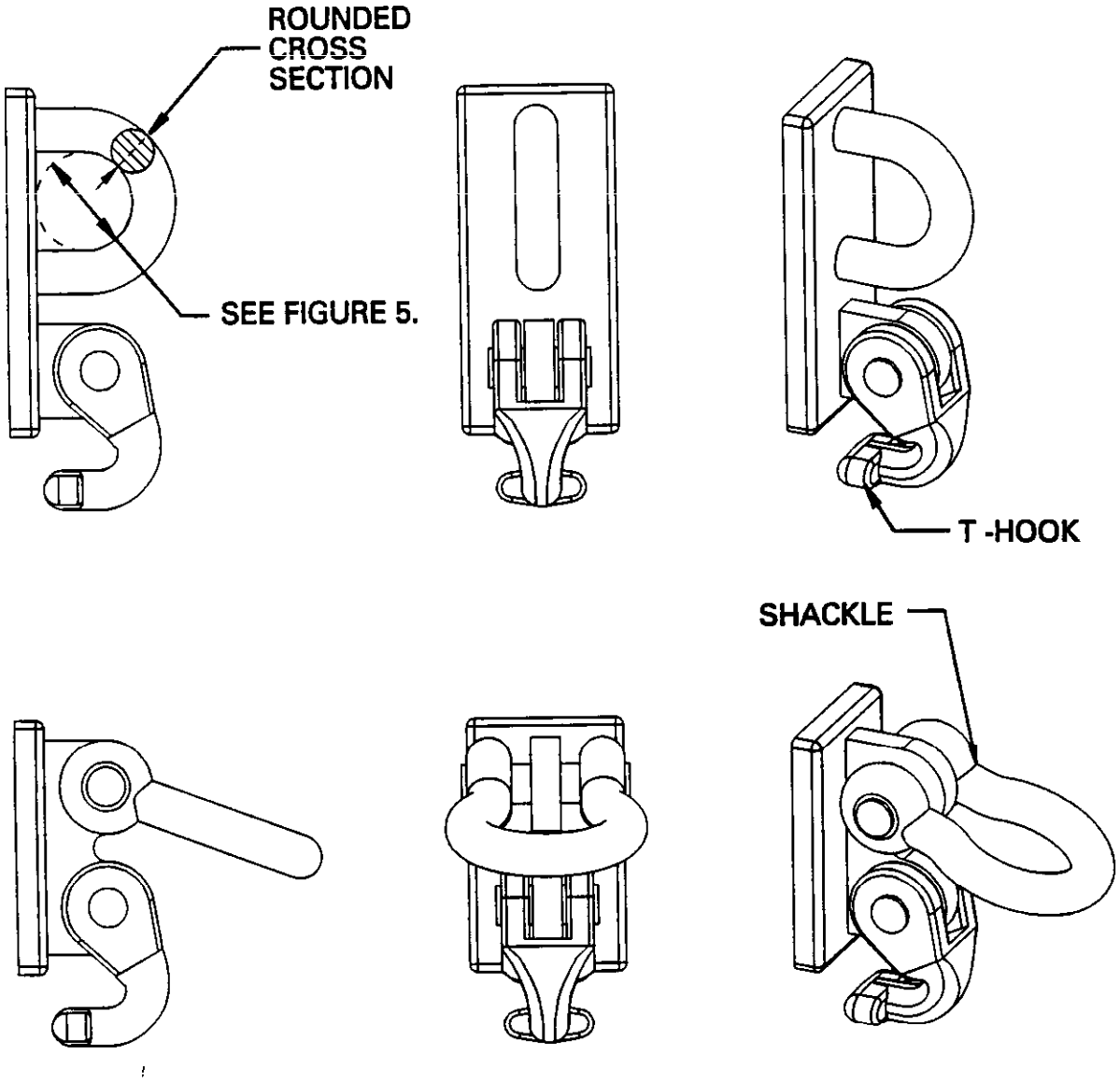

FIGURE 6. Examples of nonremovable, dual-purpose provisions.

Source: https://assist.dla.mil -- Downloaded: 2016-12-10T23:41Z
Check the source to verify that this is the current version before use.

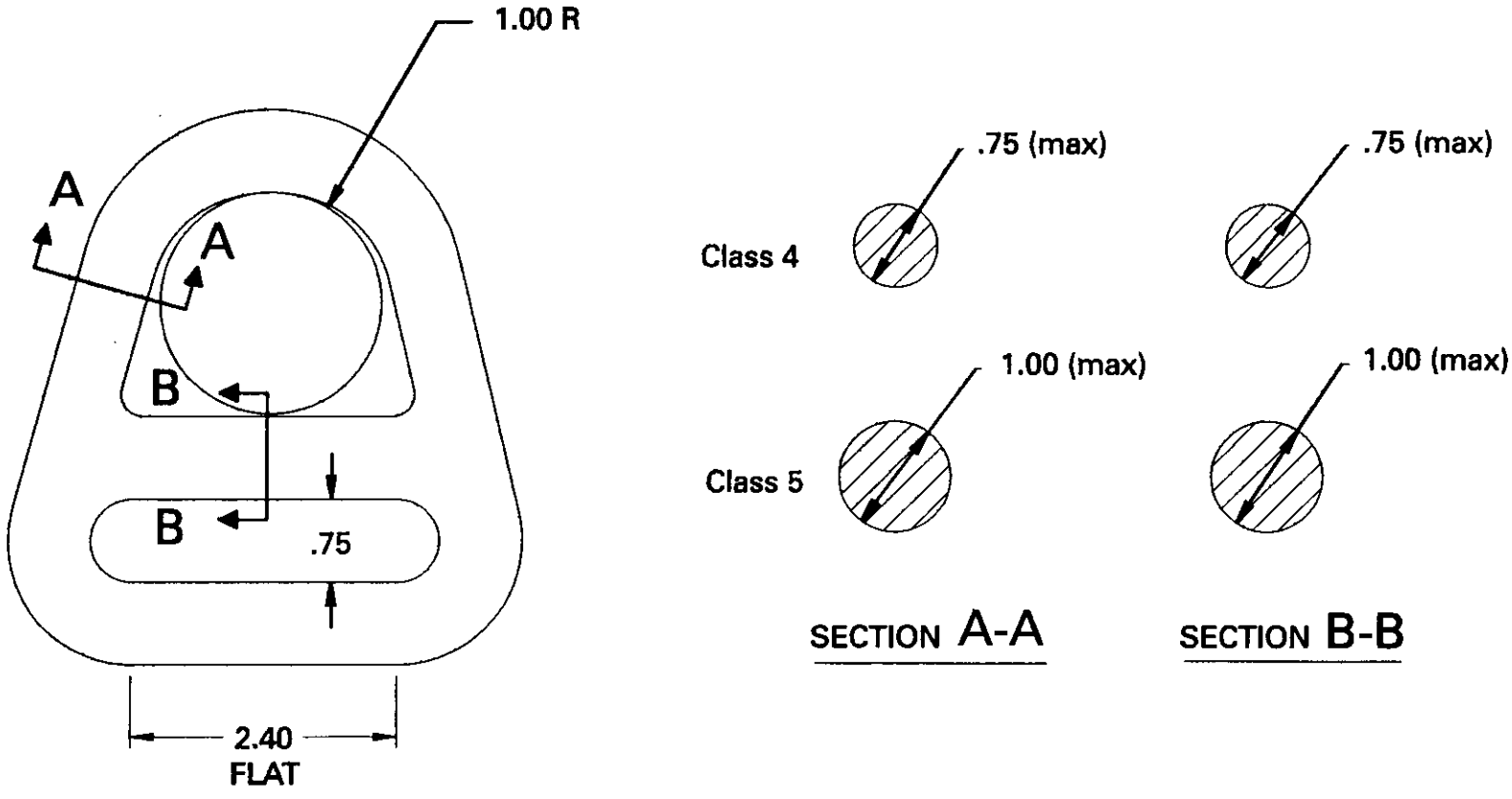

NOTES:

1. All dimensions are in inches.
2. Drawing not to scale.

FIGURE 7. Examples of classes 4 and 5 cargo tiedown provisions.

Source: https://assist.dla.mil -- Downloaded: 2016-12-10T23:41Z
Check the source to verify that this is the current version before use.

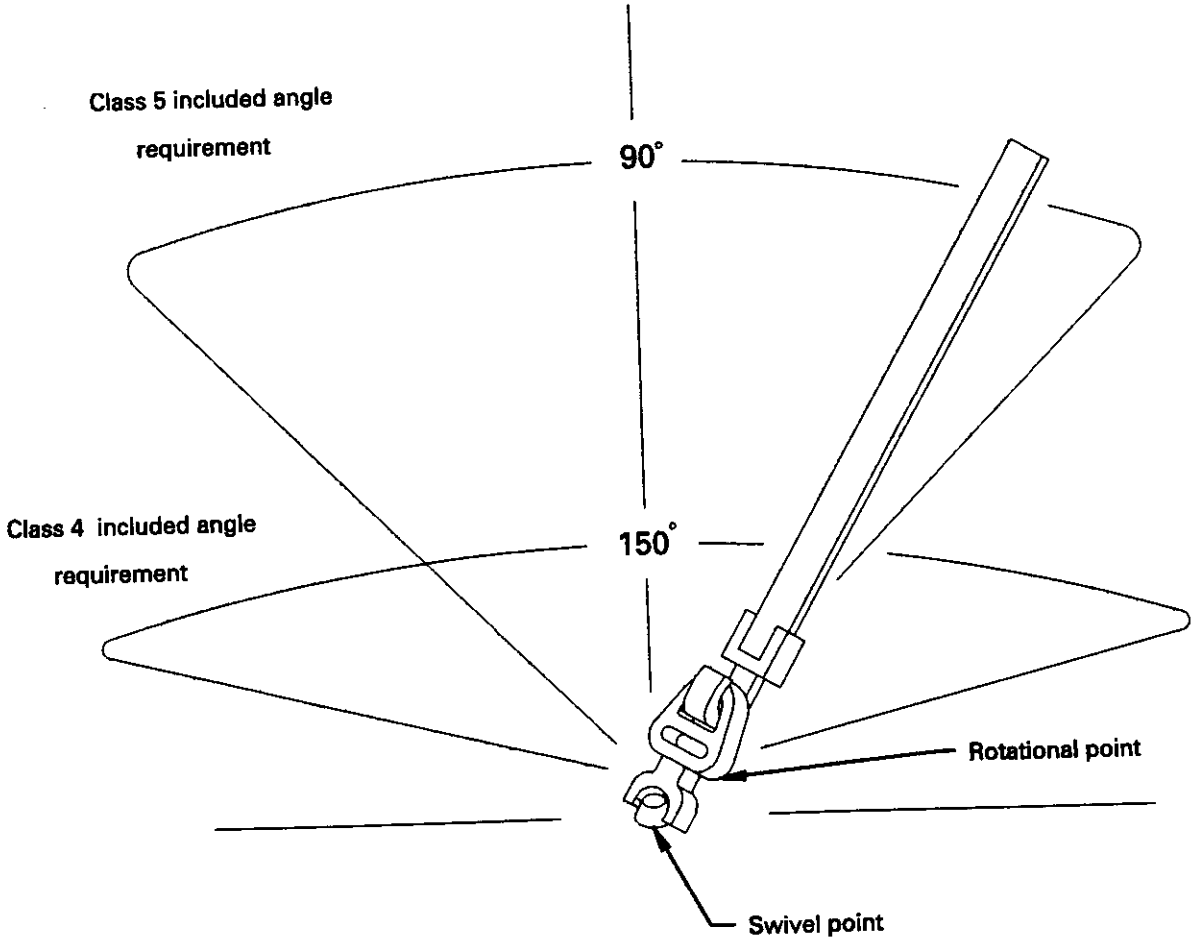

FIGURE 8. Included angle requirement.

Source: https://assist.dla.mil -- Downloaded: 2016-12-16T23:41Z
Check the source to verify that this is the current version before use.

APPENDIX A

HELICOPTER EAT MATERIEL LIFT POINT LOAD FACTORS

10. GENERAL

10.1 Scope. This appendix provides the procedures for calculating the helicopter EAT materiel lift point LF.

20. APPLICABLE DOCUMENTS. This section is not applicable to this appendix.

30. REQUIREMENTS

30.1 Determine the helicopter EAT materiel lift point LF. The helicopter EAT materiel lift point LF is used to calculate the design limit load for all materiel with a helicopter EAT requirement. The LF is calculated using the table below. The LF is a function of the helicopter EAT weight (EATWT) and the helicopter EATWT/maximum projected frontal area (MPFA) ratio. The MPFA for a single-point load is the maximum area projected on a vertical plane as the item is rotated about a vertical axis through the aircraft hook; for dual-point or tandem loads, the maximum projected area on a vertical plane is in the direction of flight.

30.1.1 EATWT/MPFA ratios greater than or equal to 60 pounds per square foot (lb/sq ft). For an EATWT/MPFA ratio of greater than or equal to 60 lb/sq ft, the materiel lift point LF is a function of EATWT in accordance with the table below.

TABLE A-I. Calculation of Materiel Lift Point LF

EATWT/MPFA (lb/sq ft)	EAT Weight (lb)	Load Factor
≥ 60	0 - 5,000	3.5
≥ 60	5,001 - 15,000	3.2
≥ 60	15,001 - 36,000	3.2 - [0.000038 x (EATWT - 15,000)]

30.1.2 EATWT/MPFA ratios between 45 and 60 lb/sq ft. For an EATWT/MPFA ratio between 45 and 60 lb/sq ft, the materiel lift point LF in the above table is increased by adding the following value: 0.16 x (60 - (EATWT/MPFA)).

30.1.3 EATWT/MPFA ratios less than or equal to 45 lb/sq ft. For an EATWT/MPFA ratio of less than or equal to 45 pounds per square foot, the materiel lift point LF in the above table is increased by adding 2.4.

Source: https://assist.dla.mil -- Downloaded: 2016-12-10T23:41Z
Check the source to verify that this is the current version before use.

30.2 Cargo equipment. For items of equipment with cargo-carrying capability, the materiel lift point LF shall be calculated for the minimum and maximum possible helicopter EATWTs. Depending upon the weights, the lesser weight could have higher design limit load requirements. Thus, the design limit load shall be the greater value of the EATWT multiplied by the lift point LF.

Source: https://assist.dla.mil -- Downloaded: 2016-12-10T23:41Z
Check the source to verify that this is the current version before use.

APPENDIX B

SAMPLE PROBLEM FOR DETERMINING THE REQUIRED STRENGTH OF THE SLINGING PROVISIONS

10. GENERAL

10.1 Scope. This appendix establishes a method for determining the required strength of the slinging provisions.

20. APPLICABLE DOCUMENTS. This section is not applicable to this appendix.

30. NOTATION

30.1 Symbols. The following letter symbols are used throughout this appendix.

L_f - length from CG to front provisions, a and b, in inches

L_r - length from CG to rear provisions, c and d, in inches

D_a - lateral distance from CG to provision a, in inches

D_b - lateral distance from CG to provision b, in inches

D_c - lateral distance from CG to provision c, in inches

D_d - lateral distance from CG to provision d, in inches

H_f - height from the ground to the front provisions, a and b, in inches

H_r - height from the ground to the rear provisions, c and d, in inches

$\triangle$ - the difference in height between the front and rear provisions, in inches

GW - gross weight, in pounds

V_a - vertical load at provision a

V_b - vertical load at provision b

V_c - vertical load at provision c

V_d - vertical load at provision d

h_a - horizontal distance from provision a to the CG

h_b - horizontal distance from provision b to the CG

Source: https://assist.dla.mil -- Downloaded: 2016-12-10T23:41Z
Check the source to verify that this is the current version before use.

h_c - horizontal distance from provision c to the CG

h_d - horizontal distance from provision d to the CG

VA_a - vertical angle at provision a

VA_b - vertical angle at provision b

VA_c - vertical angle at provision c

VA_d - vertical angle at provision d

S_a - sling leg length at provision a

S_b - sling leg length at provision b

S_c - sling leg length at provision c

S_d - sling leg length at provision d

R_a - static load on sling a

R_b - static load on sling b

R_c - static load on sling c

R_d - static load on sling d

T_a - design limit load of provision a

T_b - design limit load of provision b

T_c - design limit load of provision c

T_d - design limit load of provision d

U_a - ultimate load requirement for provision a

U_b - ultimate load requirement for provision b

U_c - ultimate load requirement for provision c

U_d - ultimate load requirement for provision d

40. GENERAL REQUIREMENTS

None.

50. DETAILED REQUIREMENTS

50.1 Example. See figure 9. The equations in this appendix have been established such that the free-body diagram is valid even if the front

Source: https://assist.dla.mil -- Downloaded: 2016-12-10T23:41Z
Check the source to verify that this is the current version before use.

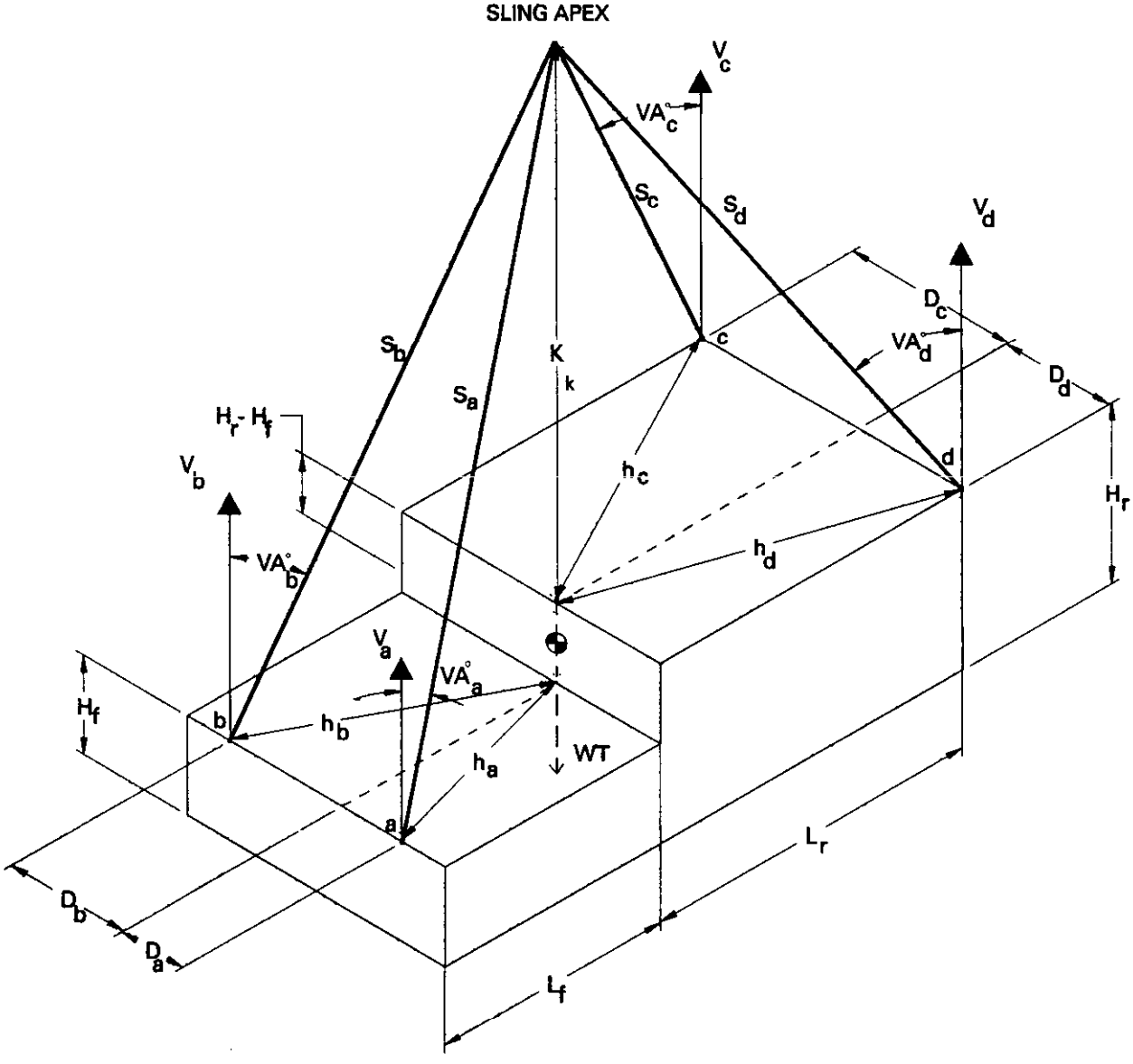

FIGURE 9. MIL-STD-209H free-body diagram.

Source: https://assist.dla.mil -- Downloaded: 2016-12-10T23:41Z
Check the source to verify that this is the current version before use.

provisions are on a plane higher than or equal to the rear provisions. This holds true because the value ($\triangle$) can be positive, negative, or equal to zero. This example demonstrates the case when the rear provisions are higher than the front provisions.

GW = 10,000 lb

L_f = 56 in., L_r = 79 in., H_f = 24 in., H_r = 33 in.

D_a = 16 in., D_b = 17 in., D_c = 33 in., D_d = 34 in.

50.1.1 Horizontal distance from the slinging provisions to the vertical axis CG.

$$h_a = \sqrt{L_f^2 + D_a^2} = \sqrt{56^2 + 16^2} = 58.24 \text{ in.}$$
$$h_b = \sqrt{L_f^2 + D_b^2} = \sqrt{56^2 + 17^2} = 58.52 \text{ in.}$$
$$h_c = \sqrt{L_r^2 + D_c^2} = \sqrt{79^2 + 33^2} = 85.62 \text{ in.}$$
$$h_d = \sqrt{L_r^2 + D_d^2} = \sqrt{79^2 + 34^2} = 86.00 \text{ in.}$$

50.1.2 Difference in height of front and rear provisions.

Define the difference in height, if any, between the front and rear provisions as follows:

$\triangle = H_r - H_f$ Note: $\triangle$ is negative when $H_f > H_r$.
$\triangle$ is positive when $H_r > H_f$.
$\triangle$ is zero when $H_r = H_f$.

$\triangle$ = 9 in.

50.1.3 Determine the sling apex height, K, above the horizontal plane of the provisions. Consider each sling separately coming from the provision to a point on the vertical line that passes through the CG.

a. The 45° angle criterion. Assume all angles, VA, are 45° such that each sling has a different height, K, above the horizontal plane of the highest provision.

$$k_a = h_a - \triangle = 58.24 - 9 = 49.24 \text{ in.}$$
$$k_b = h_b - \triangle = 58.52 - 9 = 49.52 \text{ in.}$$
$$k_c = h_c = 85.62 \text{ in.}$$
$$k_d = h_d = 86.00 \text{ in.}$$

b. The 144-inch sling length criterion. Assume all sling leg lengths, S, are 144 inches such that each sling has a different height, K, above the horizontal plane of the highest provision. Based on the 45° angle

Source: https://assist.dla.mil -- Downloaded: 2016-12-10T23:41Z
Check the source to verify that this is the current version before use.

criterion, the sling leg length, S, will be less than 144 inches only when "h" is less than 144 x cos45, or approximately 102 inches.

If $h_a < 102$ in., $k_{as} = \sqrt{144^2 - h_a^2} - \triangle$

$k_{as} = \sqrt{144^2 - 58.24^2} - 9 = 122.70$ in.

If $h_b < 102$ in., $k_{bs} = \sqrt{144^2 - h_b^2} - \triangle$

$k_{bs} = \sqrt{144^2 - 58.52^2} - 9 = 122.57$ in.

If $h_c < 102$ in., $k_{cs} = \sqrt{144^2 - h_c^2}$

$k_{cs} = \sqrt{144^2 - 85.62^2} = 115.78$ in.

If $h_d < 102$ in., $k_{ds} = \sqrt{144^2 - h_d^2}$

$k_{ds} = \sqrt{144^2 - 86.00^2} = 115.50$ in.

c. The largest of the eight possible values for k from paragraphs 50.1.3.a and 50.1.3.b is K.

$$K = 122.70 \text{ in.}$$

50.1.4 Check apex height, H_a, above ground level.

$H_a = H_r + K$ Note: H_a must be less than 288 inches.

$H_a = 155.70$ in.

50.1.5 Determine sling lengths, S.

$S_a = \sqrt{(K + \triangle)^2 + h_a^2}$

$S_a = \sqrt{(122.70 + 9)^2 + 58.24^2} = 144.00$ in.

$S_b = \sqrt{(K + \triangle)^2 + h_b^2}$

$S_b = \sqrt{(122.70 + 9)^2 + 58.52^2} = 144.12$ in.

$S_c = \sqrt{K^2 + h_c^2}$

$S_c = \sqrt{122.70^2 + 85.62^2} = 149.62$ in.

$S_d = \sqrt{K^2 + h_d^2}$

$S_d = \sqrt{122.70^2 + 86.00^2} = 149.84$ in.

Source: https://assist.dla.mil -- Downloaded: 2016-12-10T23:41Z
Check the source to verify that this is the current version before use.

50.1.6 Determine the sling angles, VA.

$$VA_a = \tan^{-1} \frac{h_a}{K + \triangle}; \quad VA_a = \tan^{-1} \frac{58.24}{122.70 + 9} = 24°$$

$$VA_b = \tan^{-1} \frac{h_b}{K + \triangle}; \quad VA_b = \tan^{-1} \frac{58.52}{122.70 + 9} = 24°$$

$$VA_c = \tan^{-1} \frac{h_c}{K}; \quad VA_c = \tan^{-1} \frac{85.62}{122.70} = 35°$$

$$VA_d = \tan^{-1} \frac{h_d}{K}; \quad VA_d = \tan^{-1} \frac{86.00}{122.70} = 35°$$

50.1.7 Determine the vertical force component, V, at each provision.

$$V_a = \frac{L_r}{(L_r + L_f)} \times \frac{D_b}{(D_a + D_b)} \times GW$$

$$V_a = \frac{79}{(56 + 79)} \times \frac{17}{(16 + 17)} \times 10{,}000 = 3{,}015 \text{ lb}$$

$$V_b = \frac{L_r}{(L_r + L_f)} \times \frac{D_a}{(D_a + D_b)} \times GW$$

$$V_b = \frac{79}{(56 + 79)} \times \frac{16}{(16 + 17)} \times 10{,}000 = 2{,}837 \text{ lb}$$

$$V_c = \frac{L_f}{(L_r + L_f)} \times \frac{D_d}{(D_c + D_d)} \times GW$$

$$V_c = \frac{56}{(56 + 79)} \times \frac{34}{(33 + 34)} \times 10{,}000 = 2{,}105 \text{ lb}$$

$$V_d = \frac{L_f}{(L_r + L_f)} \times \frac{D_c}{(D_c + D_d)} \times GW$$

$$V_d = \frac{56}{(56 + 79)} \times \frac{33}{(33 + 34)} \times 10{,}000 = 2{,}043 \text{ lb}$$

Source: https://assist.dla.mil -- Downloaded: 2016-12-10T23:41Z
Check the source to verify that this is the current version before use.

50.1.8 Determine the static load, R, for each sling leg.

$$R_a = V_a \times \frac{S_a}{K + \triangle} = 3{,}015 \times \frac{144.00}{122.70 + 9} = 3{,}297 \text{ lb}$$

$$R_b = V_b \times \frac{S_b}{K + \triangle} = 2{,}837 \times \frac{144.12}{122.70 + 9} = 3{,}105 \text{ lb}$$

$$R_c = V_c \times \frac{S_c}{K} = 2{,}105 \times \frac{149.62}{122.70} = 2{,}567 \text{ lb}$$

$$R_d = V_d \times \frac{S_d}{K} = 2{,}043 \times \frac{149.84}{122.70} = 2{,}495 \text{ lb}$$

50.1.9 Determine the required design limit load, T. For items of equipment without helicopter EAT requirements, the materiel lift point LF is 2.3. For items of equipment with helicopter EAT requirements, the materiel lift point LF is calculated using appendix A. The helicopter EAT materiel lift point LF is a function of helicopter EATWT and the helicopter EATWT/MPFA ratio. If the equipment has a cargo-carrying capability, the materiel lift point LF shall be calculated for the minimum and maximum helicopter EATWTs.

For demonstration purposes, assume that this item of equipment has a helicopter EAT and crane lift requirement and an MPFA of 105 square feet. Thus, the EATWT/MPFA ratio equals 95.24 pounds per square foot. Using appendix A, we find the materiel lift point LF for helicopter EAT is 3.2. Since this value is greater than the 2.3 materiel lift point LF required for crane lifting, 3.2 will be used.

$$T_a = R_a \times LF = 3{,}297 \times 3.2 = 10{,}550 \text{ lb}$$

$$T_b = R_b \times LF = 3{,}105 \times 3.2 = 9{,}936 \text{ lb}$$

$$T_c = R_c \times LF = 2{,}567 \times 3.2 = 8{,}214 \text{ lb}$$

$$T_d = R_d \times LF = 2{,}495 \times 3.2 = 7{,}984 \text{ lb}$$

50.1.10 Determine the required ultimate loads, U.

$$U_a = T_a \times 1.5 = 10{,}550 \times 1.5 = 15{,}825 \text{ lb}$$

$$U_b = T_b \times 1.5 = 9{,}936 \times 1.5 = 14{,}904 \text{ lb}$$

$$U_c = T_c \times 1.5 = 8{,}214 \times 1.5 = 12{,}321 \text{ lb}$$

$$U_d = T_d \times 1.5 = 7{,}984 \times 1.5 = 11{,}976 \text{ lb}$$

Source: https://assist.dla.mil -- Downloaded: 2016-12-10T23:41Z
Check the source to verify that this is the current version before use.

50.1.11 Testing requirements.

TABLE B-I. Pull test requirements.

Location	Angle of Pull for Testing (degrees)	Sling Leg Length (in.)	Design Load (lb)	Ultimate Load (lb)
Front Right Provision a	24	144	10,550	15,825
Front Left Provision b	24	144	9,936	14,904
Rear Left Provision c	35	150	8,214	12,321
Rear Right Provision d	35	150	7,984	11,976

Source: https://assist.dla.mil -- Downloaded: 2016-12-10T23:41Z
Check the source to verify that this is the current version before use.

APPENDIX C

SAMPLE PROBLEM FOR DETERMINING THE REQUIRED STRENGTH OF THE TIEDOWN PROVISIONS

10. GENERAL

10.1 Scope. This appendix establishes a method for determining the required strength of the tiedown provisions.

20. APPLICABLE DOCUMENTS. This section is not applicable to this appendix.

30. NOTATION

30.1 Symbols.

T_L - design limit load in longitudinal direction, in pounds

U_L - ultimate load in longitudinal direction, in pounds

T_V - design limit load in vertical direction, in pounds

U_V - ultimate load in vertical direction, in pounds

T_S - design limit load in lateral direction, in pounds

U_S - ultimate load in lateral direction, in pounds

GW - gross vehicle weight, in pounds

40. REQUIREMENTS

Source: https://assist.dla.mil -- Downloaded: 2016-12-10T23:41Z
Check the source to verify that this is the current version before use.

40.1 Example.

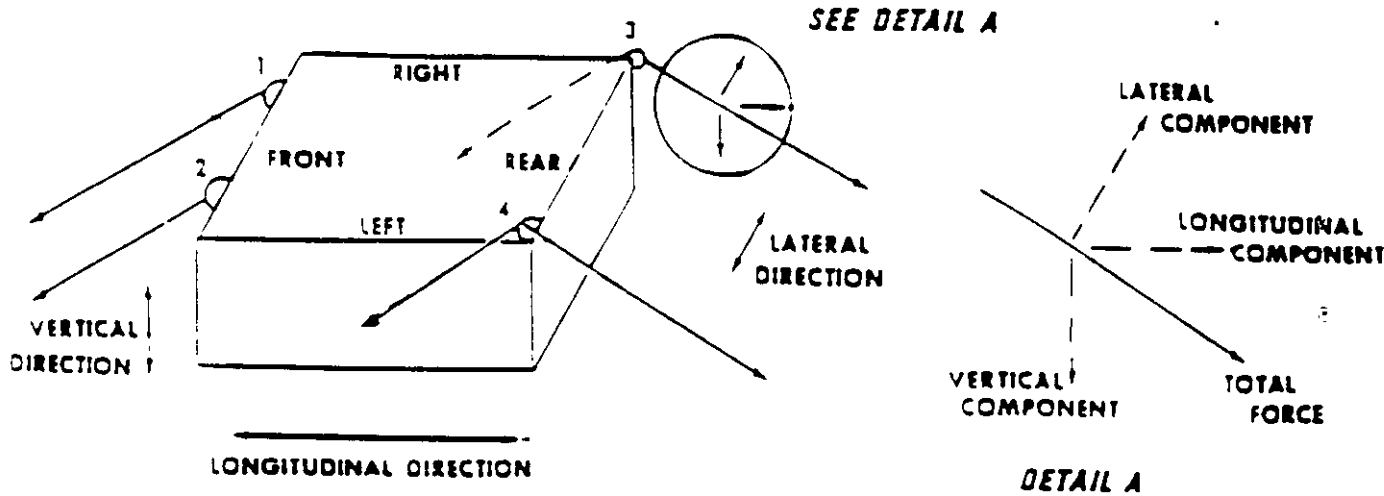

NOTE: Assume GW = 20,000 lb

Figure 10. Example of a tiedown procedure.

This example does not represent a particular item, but rather the way tiedown provisions will be used based on their locations. All four provisions will be used to restrain items in the vertical and lateral directions. Provisions 3 and 4 will restrain forces in both longitudinal directions (fore and aft). However, provisions 1 and 2 will restrain forces in only one longitudinal direction (aft). If bidirectional (tiedown cable restraint in more than one direction) use of the tiedown provisions is specified in the contractor's tiedown procedures, adequate clearances shall be provided to meet the requirements of paragraphs 4.1.2.1 and 4.1.2.3 for each direction of use.

40.1.1 Minimum required longitudinal design and ultimate loads. The longitudinal inertia force acting through the CG is:

$$4 \times GW = 4 \times 20{,}000 \text{ lb} = 80{,}000 \text{ lb}$$

Assume the inertia force will be balanced/restrained by the longitudinal force components of the applicable tiedown provisions to prevent movement of the item in the forward and aft directions.

a. To prevent movement in the forward direction, two provisions can be used:

$$T_{3L} + T_{4L} = 80{,}000 \text{ lb}$$

Source: https://assist.dla.mil -- Downloaded: 2016-12-10T23:41Z
Check the source to verify that this is the current version before use.

Based on the assumption that all provisions are located symmetrically about the CG,

$$T_{3L} = T_{4L}$$

each provision must withstand a longitudinal force (required design limit load) of 40,000 pounds applied in the aft direction.

b. To prevent movement in the aft direction, all four provisions can be used. In this example:

$$T_{1L} + T_{2L} + T_{3L} + T_{4L} = 80{,}000 \text{ lb}$$

Based on the assumption that all provisions are located symmetrically about the CG,

$$T_{1L} = T_{2L} = T_{3L} = T_{4L}$$

each provision must withstand a longitudinal force (required design limit load) of 20,000 pounds applied in the forward direction. Ultimate load requirements (1.5 x design limit load) are:

<u>forward</u> $U_{3L} = U_{4L} = 1.5 \text{ X } 40{,}000 \text{ lb} = 60{,}000 \text{ lb}$

<u>aft</u> $U_{1L} = U_{2L} = U_{3L} = U_{4L} = 1.5 \text{ X } 20{,}000 \text{ lb} = 30{,}000 \text{ lb}$

50.1.2 <u>Minimum required vertical design and ultimate loads</u>. The vertical inertia force acting through the CG is:

$$2 \text{ x GW} = 2 \text{ x } 20{,}000 \text{ lb} = 40{,}000 \text{ lb}$$

It should be assumed that this force will be restrained by the vertical force components of the tiedown provisions against upward movement of the item.

$$T_{1v} + T_{2v} + T_{3v} + T_{4v} = 40{,}000 \text{ lb}$$

Based on the assumption that the vertical force on each provision will be equal,

$$T_{1v} = T_{2v} = T_{3v} = T_{4v}$$

each provision must withstand a vertical force (required design limit load) of 10,000 pounds applied in the downward direction. Ultimate load requirements (1.5 x design limit load) are:

$$U_{1v} = U_{2v} = U_{3v} = U_{4v} = 1.5 \text{ x } 10{,}000 \text{ lb} = 15{,}000 \text{ lb}$$

50.1.3 <u>Minimum required lateral design limit and ultimate loads</u>. The lateral inertia force acting through the CG is:

$$1.5 \text{ x GW} = 1.5 \text{ x } 20{,}000 \text{ lb} = 30{,}000 \text{ lb}$$

Source: https://assist.dla.mil -- Downloaded: 2016-12-10T23:41Z
Check the source to verify that this is the current version before use.

It should be assumed that this force will be restrained by the lateral force components of the tiedown provisions toward the left and right.

a. To prevent movement toward the right, two provisions can be used:

$$T_{2s} + T_{4s} = 30{,}000 \text{ lb}$$

Based on the assumption that all provisions are located symmetrically about the CG,

$$T_{2s} = T_{4s}$$

each provision must withstand a lateral force (required design limit load) of 15,000 pounds applied toward the right.

b. To prevent movement toward the left, two provisions can be used:

$$T_{1s} + T_{3s} = 30{,}000 \text{ lb}$$

Based on the assumption that all provisions are located symmetrically about the CG,

$$T_{1s} = T_{3s}$$

each provision must withstand a lateral force (required design limit load) of 15,000 pounds, applied toward the left. Ultimate strength requirements (1.5 x design limit load) are:

<u>right</u> $U_{2s} = U_{4s} = 15{,}000 \times 1.5 = 22{,}500$ lb

<u>left</u> $U_{1s} = U_{3s} = 15{,}000 \times 1.5 = 22{,}500$ lb

(If the tiedown pattern used has the cables crossing, then the lateral force will be opposite from that shown above.)

Source: https://assist.dla.mil -- Downloaded: 2016-12-10T23:41Z
Check the source to verify that this is the current version before use.

APPENDIX D

CONVERSION TABLES

10. GENERAL

10.1 Scope. This appendix provides information for converting US Customary System measurements to metric.

20. APPLICABLE DOCUMENTS. This section is not applicable to this appendix.

30. COMMON METRIC ABBREVIATIONS

m = meter	kg = kilogram
dm = decimeter	km = kilometer
cm = centimeter	t = metric ton
mm = millimeter	Pa = pascal
Hz = hertz	rad = radian
mhp = metric horsepower	km/hr = kilometers per hour

40. COMMON METRIC CONVERSIONS

40.1 Length

1 mi = 1609.35 m	1 km = 0.6214 mi
1 yd = 0.9144 m	1 m = 1.0936 yd
1 ft = 0.3048 m	1 m = 3.2808 ft
1 in = 0.0254 m	1 m = 39.3700 in.
1 m = 10 dm = 100 cm = 1000 mm	

40.2 Area

1 sq yd = 0.8361 sq m	1 sq m = 1.196 sq yd
1 sq ft = 0.0929 sq m	1 sq m = 10.764 sq ft
1 sq in = 0.00065 sq m	1 sq m = 1,550 sq in.

40.3 Volume

1 cu yd = 0.76456 cu m	1 cu m = 1.31 cu yd
1 cu ft = 0.02831 cu m	1 cu m = 35.31 cu ft
1 cu in. = 0.000016 cu m	1 cu m = 61023 cu in.
1 litre = 1.00×10^{-3} cu m	1 gal = 0.0038 cu m

40.4 Mass

1 STON = 907.185 kg	1 kg = 2.2046 lb
1 LTON = 1016 kg	1 t = 1000 kg
1 lb = 0.45359 kg	1 t = 2204.62 lb

40.5 Acceleration

1 foot/second^2 = 0.3048 m/s^2
free fall, standard = 9.807 m/s^2

Source: https://assist.dla.mil -- Downloaded: 2016-12-10T23:41Z
Check the source to verify that this is the current version before use.

40.6 Velocity (includes speed)

1 foot/second = 0.3048 m/s
1 knot (international) = 0.5144 m/s
1 mile/hour = 0.4470 m/s
1 rev/min = 0.1047 rad/s
1 kilometer/hour = 0.278 m/s

40.7 Mass/Area

1 pound-mass/foot^2 = 4.882 kg/m^2
1 pound-mass/inch^2 = 703.1 kg/m^2

40.8 Pressure/Stress

1 pound-force/inch^2 = 6895 Pa
1 pound-force/foot^2 = 47.88 Pa

40.9 Angular Measure

1 degree = 0.01745 rad

40.10 Force

1 pound-force = 4.448 newton

40.11 Power

1 horsepower = 1.014 metric horsepower

40.12 Quick conversions. The following simplified conversion factors are accurate within 2 percent for quick computations:

Inches to centimeters - Multiply in. by 10 and divide by 4.
Yards to meters - Multiply yd by 9 and divide by 10.
Miles to kilometers - Multiply mi by 8 and divide by 5.
Pounds to kilograms - Multiply lb by 5 and divide by 11.

40.13 Measurement Ton. A measurement ton equals 40 cubic feet of volume.

Source: https://assist.dla.mil -- Downloaded: 2016-12-10T23:41Z
Check the source to verify that this is the current version before use.