NOT MEASUREMENT SENSITIVE

MIL-STD-40051-2C
15 December 2015

SUPERSEDING
MIL-STD-40051-2B
17 October 2012

DEPARTMENT OF DEFENSE STANDARD PRACTICE

PREPARATION OF DIGITAL TECHNICAL INFORMATION
FOR
PAGE-BASED TECHNICAL MANUALS (TMs)

AMSC 9613 AREA TMSS

DISTRIBUTION STATEMENT A. Approved for public release; distribution is unlimited.

Source: https://assist.dla.mil -- Downloaded: 2016-12-09T23:24Z
Check the source to verify that this is the current version before use.

FOREWORD

1. This standard is approved for use by the Department of the Army and the United States Marine Corps and is available for use by all Departments and Agencies of the Department of Defense (DOD).

2. This standard establishes the technical content requirements and mandatory style and format requirements for the preparation of technical manuals (TMs) and other types of equipment publications specified herein and subsequent revisions required to support the various types of equipment and weapon systems within the Department of the Army and the Marine Corps. The requirements contained in this standard cover operation (except aviation) and maintenance at all levels through overhaul (depot), including depot maintenance work requirements (DMWRs) and national maintenance work requirements (NMWRs). The requirements also cover destruction to prevent enemy use, battle damage assessment and repair (BDAR), lubrication orders (LOs), preventive maintenance checklists (PMCs), general maintenance manuals, and software manuals.

3. This two-part book form consists of the following parts.

MIL-STD-40051-1	—	Preparation of Digital Technical Information for Interactive Electronic Technical Manuals (IETM)
MIL-STD-40051-2	—	Preparation of Digital Technical Information for Page-Based Technical Manuals (TMs)

4. Comments, suggestions, or questions should be addressed to USAMC Logistics Support Activity, ATTN: AMXLS-AP, Bldg 3307, Redstone Arsenal, AL 35898 or emailed to usarmy.redstone.logsa.mbx.tmss@mail.mil. Since contact information can change, you may want to verify the currency of this address information using the ASSIST Online database at https://assist.dla.mil/.

Source: https://assist.dla.mil -- Downloaded: 2016-12-09T23:24Z
Check the source to verify that this is the current version before use.

REVISION SUMMARY

This is a summary of the changes made in this revision. All technical changes are marked with vertical bars. Editorial changes (e.g., spelling corrections, grammar corrections, punctuation corrections, corrections to paragraph references, etc.) are not marked with vertical bars. Also, changes to the table of contents will not be marked with a vertical bar. Changes to Section 2 and to paragraph 3.1 in Section 3 are not marked with vertical bars due to large number of changes to them. The content selection matrixes in Appendix A have all been changed and will not be marked with vertical bars to avoid cluttering them. For figures, changes to the title and/or number will be marked with a vertical bar to the left of the figure title/number. When the content of the figure changes or when both title/number and contents change, the vertical bar will appear to the right of the figure number/title. For tables, when the number or title changes, a vertical bar will be marked with a vertical bar to the left of the number/title. Changed rows in the table will be marked with a vertical bar unless all rows are changed. If all rows are changed, a vertical bar will be placed to the right of the table number/title. If number or title changes and all rows are changed, a vertical bar will appear to the right of the table number/title. Below is a tabular listing with all the specific technical changes made which are marked with a vertical bar.

Current Para/Fig/Table Number	***Previous Para/Fig/Table Number***	***Action***
2 (Foreword)	2 (Foreword)	Changed
4 (Foreword)	4 (Foreword)	Changed
1.1	1.1	Changed
1.4	1.4	Changed
Section 2	Section 2	Added/deleted/changed documents, source statements, URls, e-mail addresses, etc
3.1	3.1	Added, deleted, and changed acronyms and their definitions
*	3.6	Deleted
3.14	*	Added
3.18	3.18	Changed
3.19	3.19	Changed
3.27	3.27	Changed format
3.28	3.28	Changed
3.29	3.29	Changed
3.30	*	Added
3.31	*	Added
3.35	3.33	Changed
3.37	3.35	Changed
3.38	3.36	Changed
3.40	*	Added
3.43	*	Added
3.45	3.41	Changed

Source: https://assist.dla.mil -- Downloaded: 2016-12-09T23:24Z
Check the source to verify that this is the current version before use.

Current Para/Fig/Table Number	***Previous Para/Fig/Table Number***	***Action***
3.46	3.42	Changed
3.50	*	Added
3.61	3.56	Changed
3.64	3.59	Changed
3.65	*	Added
3.70	3.64	Changed
*	3.69	Deleted
3.76	3.71	Changed
3.84	3.79	Changed
3.86	3.81	Changed
3.87	3.82	Changed format
3.88	3.83	Changed
3.89	3.84a(2)(a)	Changed
3.90	3.85	Changed
3.93	3.88	Changed
3.94	*	Added
*	3.89	Deleted
3.95	3.90	Changed
3.96	3.91	Changed
3.97	3.92	Changed
3.99	3.94	Changed
3.103	3.98	Changed
3.105	3.100	Changed
3.112	3.107	Changed
3.116	3.111	Changed
3.119	3.114	Changed
3.120	3.115	Changed
*	3.118	Changed
3.130	*	Added
3.131	3.126	Changed
3.138	*	Added
3.139	3.133	Changed
3.140	3.134	Changed
3.143	*	Added
3.144	*	Added
3.146	3.138	Changed
3.148	3.140	Changed
3.149	3.141	Changed
3.152	3.144	Changed
3.153	*	Added
3.156	*	Added
3.162	3.152	Changed

Source: https://assist.dla.mil -- Downloaded: 2016-12-09T23:24Z
Check the source to verify that this is the current version before use.

Current Para/Fig/Table Number	***Previous Para/Fig/Table Number***	***Action***
4.1	4.1	Changed lead in and added Appendix M & N
4.2	4.2	Changed
4.2h	4.2h	Changed
4.2i,j,&k	*	Added
4.3	4.3	Changed
4.4	4.4	Changed
4.5	4.5	Changed
4.6	4.6	Changed
*	4.7	Deleted
4.7.1	4.8.1	Changed
4.7.2.2	4.8.2.2	Changed
4.7.2.3	4.8.2.3	Changed
4.7.2.3.1	4.8.2.3.1	Changed
4.7.5a	4.8.5a	Changed
4.7.7.1	4.8.7.1	Changed
4.7.7.2	4.8.7.2	Changed
4.7.7.3	4.8.7.3	Changed
4.7.7.4a(1),(2),(3),&(4)	4.8.7.4a(1),(2),(3),&(4)	Changed
4.7.7.4b	*	Added
4.7.7.4h	4.8.7.4g	Changed
4.7.7.4i	4.8.7.4h	Changed
4.7.9.1a	4.8.9.1a	Changed
4.7.9.3.1	4.8.9.3.1	Changed
4.7.9.4	4.8.9.4	Changed
4.7.9.4.2	4.8.9.4.2	Changed
4.7.9.4.2a	4.8.9.4.2a	Changed
4.7.9.4.2b	4.8.9.4.2b	Changed
4.7.9.4.2c	4.8.9.4.2c	Changed
4.7.9.4.2 (last part)	4.8.9.4.2 (last part)	Changed
4.7.9.4.3	*	Added
4.7.9.4.4	4.8.9.4.3	Changed
4.7.9.4.5	*	Added
4.7.9.4.6	4.8.9.4.4	Changed
4.7.9.4.7	4.8.9.4.5	Changed
4.7.9.4.8	4.8.9.4.6	Changed
4.7.9.4.10	4.8.9.4.8	Changed
4.7.9.4.11	4.8.9.4.9	
4.7.11	4.8.11	Changed
4.7.12	4.8.12	Text deleted (last 2 sentences)
4.7.13.2	4.8.13.2	Changed
4.7.13.3	4.8.13.3	Changed

Source: https://assist.dla.mil -- Downloaded: 2016-12-09T23:24Z
Check the source to verify that this is the current version before use.

Current Para/Fig/Table Number	***Previous Para/Fig/Table Number***	***Action***
4.7.13.5	4.8.13.5	Changed
*	4.8.13.7d	Deleted
4.7.13.7u	*	Added
4.7.13.7x	*	Added
4.7.13.7y	*	Added
4.7.13.7bb	*	Added
4.7.16	4.8.16	Changed
4.7.16.1	4.8.16.1	Changed
4.7.16.2.1.1e	4.8.16.2.1.1e	Changed
4.7.17	4.8.17	Changed
4.7.17b	4.8.17b	Changed
4.7.22.1.1	4.8.22.1.1	Changed
4.7.23.1	4.8.23.1	Changed
4.7.23.4	4.8.23.4	Changed
*	4.8.23.8	Deleted
4.7.23.10	4.8.23.11	Changed
4.7.23.11	*	Added
4.7.27.1	4.8.27.1	Changed
4.7.27.2.3.3	4.8.27.2.3.3	Changed
4.7.27.2.5.1	4.7.27.2.5.1	Changed
Table III	Table III	Changed
4.7.27.2.7	4.8.27.2.7	Changed
4.7.27.3.3	4.8.27.3.3	Changed
4.7.27.3.4	4.8.27.3.4	Changed
4.7.27.4.5.2a	4.8.27.4.5.2a	Changed
4.7.27.4.5.2d	*	Added
4.8.1.1	4.9.1.1	Changed
4.8.1.1e	4.9.1.1e	Changed
4.8.1.5g	4.9.1.5g	Changed
4.8.1.6c&d	4.9.1.6c&d	Changed
5.1a,b,&c	5.1a,b,&c	Changed
5.2	5.2	Changed
5.2.1b	5.2.1b	Changed
5.2.1.1	5.2.1.1	Changed
5.2.1.1c	*	Added
5.2.1.1e(1)	*	Added
5.2.1.1e(3)	5.2.1.1e(2)	Changed
5.2.1.1.2	*	Added
5.2.1.1.4	5.2.1.1.3	Changed
5.2.1.1.4.2	5.2.1.1.3.2	Changed
5.2.1.1.4.4	5.2.1.1.3.4	Changed
5.2.1.1.9	5.2.1.1.8	Changed
5.2.1.1.10	5.2.1.1.9	Changed

Source: https://assist.dla.mil -- Downloaded: 2016-12-09T23:24Z
Check the source to verify that this is the current version before use.

Current Para/Fig/Table Number	***Previous Para/Fig/Table Number***	***Action***
5.2.1.1.11	5.2.1.1.10	Changed
5.2.1.1.12.1	5.2.1.1.11.1	Changed
5.2.1.3	5.2.1.3	Changed
5.2.1.5	5.2.1.5	Changed
*	5.2.1.6.2c	Deleted
*	5.2.1.6.4e	Deleted
5.2.1.6.5	*	Added
5.2.1.6.6	5.2.1.6.10	Moved and Changed
5.2.1.6.7	*	Added
5.2.1.6.12	5.2.1.6.9	Changed
5.2.1.7.1a(1)	5.2.1.7.1a(1)	Changed
5.2.1.7.1a(2)(a)&(b)	5.2.1.7.1a(2)(a)&(b)	Changed
5.2.1.10.1 (Note)	5.2.1.10.1 (Note)	Changed
5.2.3	5.2.2	Moved
5.2.3a(5)	5.2.2a(5)	Changed
5.2.3b(5)	5.2.2b(5)	Changed
5.2.4	*	Added
5.2.4.1	*	Added
5.2.4.2	*	Added
5.2.4.3	*	Added
5.2.4.4	*	Added
*	6.2c	Deleted
6.3	6.3	Changed
Figure 1	Figure 1	Changed
Figure 2	*	Added
Figure 5	Figure 4	Changed
Figure 7	Figure 7	Changed
Figure 9	Figure 9	Changed
Figure 10	Figure 10	Changed
Figure 11	Figure 11	Changed
Figure 13	Figure 13	Changed
Figure 14	Figure 14	Changed
Figure 18	Figure 18	Changed
Figure 19	Figure 19	Changed
*	Figure 20	Deleted
Figure 20	Figure 6	Moved
Figure 22	Figure 22	Changed
Figure 24	Figure 24	Changed
Figure 25	Figure 25	Changed
Figure 26	Figure 26	Changed
Figure 27	Figure 27	Changed
Figure 28	Figure 28	Changed
Figure 33	Figure 33	Changed

Source: https://assist.dla.mil -- Downloaded: 2016-12-09T23:24Z
Check the source to verify that this is the current version before use.

Current Para/Fig/Table Number	***Previous Para/Fig/Table Number***	***Action***
Figure 34	Figure 34	Changed
A.5.1	A.5.1	Changed
Table A-I	Table A-I	Changed
A.5.3	A.5.3	Changed
A.5.3.1a	A.5.3.1a	Changed
A.5.3.1a(1)	A.5.3.1a(1)	Changed
A.5.3.1a(2)	A.5.3.1a(2)	Changed
A.5.3.1a(3)	A.5.3.1a(3)	Changed
A.5.3.1b	A.5.3.1b	Changed
A.5.3.1c	A.5.3.1c	Changed
Table A-II	Table A-II	Changed
Table A-III	Table A-III	Changed
Table A-IV	Table A-IV	Changed
Table A-V	Table A-V	Changed
Table A-VI	Table A-VI	Changed
Table A-VII	Table A-VII	Changed
Table A-VIII	Table A-VIII	Changed
Table A-IX	Table A-IX	Changed
Table A-X	Table A-X	Changed
Table A-XI	Table A-XI	Changed
Table A-XII	Table A-XII	Changed
Table A-XIII	Table A-XIII	Changed
Table A-XIV	Table A-XIV	Changed
Table A-XV	Table A-XV	Changed
Table A-XVI	Table A-XVI	Changed
Table A-XVII	Table A-XVII	Changed
Table A-XVIII	Table A-XVIII	Changed
Table A-XIX	Table A-XIX	Changed
Table A-XX	*	Added
Table A-XXI	*	Added
B.1.1	B.1.1	Changed
B.4.2	B.4.2	Changed
B.4.3	B.4.3	Changed
B.4.4	B.4.4	Changed
B.4.11	B.4.11	Changed
B.5.2.3d	B.5.2.3d	Changed
B.5.2.5 (boilerplate)	B.5.2.5 (boilerplate)	Changed
B.5.2.7	*	Added
B.5.2.7.1	*	Added
B.5.2.7.2	B.5.2.7	Lead in changed and new para number
B.5.2.7.3	*	Added
B.5.2.7.4	*	Added

Source: https://assist.dla.mil -- Downloaded: 2016-12-09T23:24Z
Check the source to verify that this is the current version before use.

Current Para/Fig/Table Number	***Previous Para/Fig/Table Number***	***Action***
B.5.2.10	B.5.2.10	Changed
B.5.2.11	*	Added
B.5.2.15	B.5.2.14	Changed
B.5.2.16	B.5.2.15	Changed
B.5.2.25	B.5.2.24	Changed
B.5.3.4	B.5.3.4	Changed
B.5.3.5	B.5.3.5	Changed
B.5.4	B.5.4	Changed
B.5.4.3d	B.5.4.3d	Changed
B.5.5	B.5.5	Changed
B.5.5 (Special Instructions para)	B.5.5 (Special Instructions para)	Changed
B.5.6	B.5.6	Changed
B.5.6.3.2 (MOC para)	B.5.6.3.2 (MOC para)	Changed
C.1.1	C.1.1	Changed
C.4.3	C.4.3	Changed
C.4.4	C.4.4	Changed
C.4.11	C.4.11	Changed
C.5.2.2.2.3.1-C.5.2.2.2.3.10	C.5.2.2.4-C.5.2.2.13	Corrected paragraph numbering (no bars)
C.5.2.2.2.3.10	C.5.2.2.13	Changed
C.5.2.2.3.3.1-C.5.2.2.3.3.7	C.5.2.2.3.4-C.5.2.2.3.10	Corrected paragraph numbering (no bars)
C.5.2.2.3.3.4	C.5.2.2.3.7	Changed
C.5.2.2.3.3.7	C.5.2.2.3.10	Changed
C.5.2.2.4.5	*	Added
Figure C-1	Figure C-1	Changed
D.1.1	D.1.1	Changed
D.4.2	D.4.2	Changed
D.4.3	D.4.3	Changed
D.4.4	D.4.4	Changed
D.4.5	D.4.5	Changed
D.4.12	D.4.12	Changed
D.5.1	D.5.1	Changed
D.5.2	D.5.2	Changed
D.5.2.1	D.5.2.1	Changed
D.5.5	D.5.5	Changed
D.5.5.5.3	D.5.5.5.3	Changed
D.5.5.5.3a	D.5.5.5.3a	Changed
D.5.5.5.3b	D.5.5.5.3b	Changed
D.5.5.8.3.6.1	D.5.5.8.3.6.1	Changed
D.5.5.8.3.8	D.5.5.8.3.8	Changed
D.5.5.8.4	D.5.5.8.4	Changed

Source: https://assist.dla.mil -- Downloaded: 2016-12-09T23:24Z
Check the source to verify that this is the current version before use.

Current Para/Fig/Table Number	***Previous Para/Fig/Table Number***	***Action***
D.5.5.8.4a&b	D.5.5.8.4a&b	Changed
D.5.5.8.4.6.1a	D.5.5.8.4.6.1a	Changed
D.5.5.8.4.6.1b	D.5.5.8.4.6.1b	Changed
D.5.5.8.4.7	D.5.5.8.4.7	Changed
D.5.5.8.4.8	D.5.5.8.4.8	Changed
D.5.5.8.5.8	D.5.5.8.5.8	Changed
Figure D-3	Figure D-3	Changed
Figure D-4	Figure D-4	Changed
Figure D-5	Figure D-5	Changed
Figure D-6	Figure D-6	Changed
Figure D-8	Figure D-8	Changed
E.1.1	E.1.1	Changed
E.4.1	E.4.1	Changed
E.4.2	E.4.2	Changed
E.4.3	E.4.3	Changed
E.4.4	E.4.4	Changed
E.4.5	E.4.5	Changed
E.4.6	E.4.6	Changed
E.4.13	E.4.13	Changed
E.5.1	E.5.1	Changed
E.5.2.1	E.5.2.1	Changed
E.5.2.2	E.5.2.2	Changed
E.5.2.3	E.5.2.3	Changed
E.5.2.7	E.5.2.7	Changed
E.5.2.7a	*	Added
E.5.2.7b	E.5.2.7b	Changed
E.5.2.8	E.5.2.8	Changed
E.5.2.9	E.5.2.9	Changed
E.5.2.10	E.5.2.10	Changed
E.5.2.13	*	Added
E.5.2.14	*	Added
E.5.3	E.5.3	Changed
E.5.3.1	E.5.3.1	Changed
E.5.3.2	E.5.3.2	Changed
E.5.3.2.3	E.5.3.2.3	Changed
E.5.3.2.3.9	E.5.3.2.3.9	Changed
E.5.3.4.1	E.5.3.4.1	Changed
E.5.3.4.1.3a	E.5.3.4.1.3a	Changed
E.5.3.4.1.3b	E.5.3.4.1.3b	Changed
E.5.3.4.1.3c	E.5.3.4.1.3c	Changed
E.5.3.4.1.3d	E.5.3.4.1.3d	Changed
E.5.3.4.2.3	E.5.3.4.2.3	Changed

Source: https://assist.dla.mil -- Downloaded: 2016-12-09T23:24Z
Check the source to verify that this is the current version before use.

Current Para/Fig/Table Number	***Previous Para/Fig/Table Number***	***Action***
E.5.3.4.2.3.1.2	E.5.3.4.2.3.1.2	3rd sentence deleted and biennially added to list of intervals
E.5.3.4.2.3.1.5	E.5.3.4.2.3.1.5	Changed
E.5.3.4.2.3.1.6	E.5.3.4.2.3.1.6	Changed
E.5.3.4.2.4	E.5.3.4.2.4	Changed
E.5.3.5	E.5.3.5	Changed
*	E.5.3.5a	Deleted (Moved to lead in)
E.5.3.5g	E.5.3.5h	Changed
E.5.3.5.3	E.5.3.5.3	Changed main para, deleted one task and added several new maintenance tasks to list
E.5.3.5.3.1e	*	Added
E.5.3.5.3.1h	E.5.3.5.3.1g	Changed
E.5.3.5.3.2.2	E.5.3.5.3.2.2	Changed
*	E.5.3.5.3.2.2b	Deleted
*	E.5.3.5.3.2.2e&f	Deleted
E.5.3.5.3.2.2.1	*	Added
E.5.3.5.3.2.2.2	*	Added
E.5.3.5.3.3a	E.5.3.5.3.3a	Changed
E.5.3.5.3.7	E.5.3.5.3.7	Changed
E.5.3.5.3.8	E.5.3.5.3.8	Changed
E.5.3.5.3.8c	*	Added
E.5.3.5.3.9	E.5.3.5.3.9	Changed
E.5.3.5.3.9e	E.5.3.5.3.9e	Changed
E.5.3.5.3.9f	*	Added
E.5.3.5.3.10	E.5.3.5.3.10	Changed
E.5.3.5.3.11	E.5.3.5.3.11	Changed
E.5.3.5.3.16a&b	E.5.3.5.3.16a&b	Changed
E.5.3.5.3.17b	E.5.3.5.3.17b	Changed
E.5.3.5.3.17b(3)&(4)	*	Added
E.5.3.5.3.18a	E.5.3.5.3.18	Changed
E.5.3.5.3.18b&c	*	Added
E.5.3.5.3.21f	*	Added
E.5.3.5.3.22b	*	Added
E.5.3.5.3.28	E.5.3.5.3.28	Changed
E.5.3.5.3.35	E.5.3.5.3.35	Changed
E.5.3.5.3.36	*	Added
E.5.3.5.3.37	*	Added
E.5.3.5.3.38	E.5.3.5.3.36	Changed
*	E.5.3.5.3.39	Deleted
E.5.3.5.3.41	*	Added

Source: https://assist.dla.mil -- Downloaded: 2016-12-09T23:24Z
Check the source to verify that this is the current version before use.

Current Para/Fig/Table Number	***Previous Para/Fig/Table Number***	***Action***
E.5.3.5.3.42	*	Added
E.5.3.5.3.43	*	Added
E.5.3.5.3.44	*	Added
E.5.3.5.3.45	*	Added
E.5.3.8.4c	E.5.3.8.4c	Changed
E.5.3.9.1	E.5.3.9.1	Changed
E.5.3.9.1.1	*	Added
E.5.3.9.1.2	*	Added
E.5.3.9.1.3	E.5.3.9.1 (part of it)	Changed main body and paragraph number
E.5.3.11	E.5.3.11	Changed
E.5.3.12.3.1	*	Added
E.5.3.12.4	E.5.3.12.5	Changed
E.5.3.12.5	*	Added
E.5.3.12.6	E.5.3.12.5	Changed
E.5.3.12.6.1	*	Added
E.5.3.12.6.2	*	Added
E.5.3.12.7	E.5.3.12.6	Changed
E.5.3.16.4	*	Added
Figure E-2	Figure E-2	Changed
*	Figure E-3	Deleted
Figure E-4	Figure E-5	Changed
Figure E-7	Figure E-8	Changed
Figure E-10	Figure E-11	Changed
F.1.1	F.1.1	Changed
F.4.2	F.4.2	Changed
F.4.3	F.4.3	Changed
F.4.4	F.4.4	Changed
F.4.8	F.4.8	Changed
F.5.2	F.5.2	Changed
F.5.3	F.5.3	Changed
F.5.3.3	F.5.3.3	Changed
F.5.3.3.1	F.5.3.3.1	Changed
F.5.3.3.2	F.5.3.3.2	Changed
F.5.3.5.3	F.5.3.5.3	Changed
F.5.3.5.3.1 (boilerplate)	F.5.3.5.3.1 (boilerplate)	Changed
F.5.3.5.3.2 (boilerplate)	F.5.3.5.3.2 (boilerplate)	Changed
F.5.3.5.3.3	*	Added
F.5.3.6.3.2	F.5.3.6.3.2	Changed
F.5.3.6.3.2.3.2.4	F.5.3.6.3.2.3.2.4	Changed
F.5.3.6.3.2.6	F.5.3.6.3.2.6	Changed
F.5.3.6.3.2.6.4	F.5.3.6.3.2.6.4	Changed
F.5.3.6.3.2.9	F.5.3.6.3.2.9	Changed

Source: https://assist.dla.mil -- Downloaded: 2016-12-09T23:24Z
Check the source to verify that this is the current version before use.

Current Para/Fig/Table Number	***Previous Para/Fig/Table Number***	***Action***
F.5.3.8	F.5.3.8	Changed
F.5.3.8.3	F.5.3.8.3	Changed
F.5.3.10	F.5.3.10	Changed
F.5.3.10.3	F.5.3.10.3	Changed
F.5.3.11.1	F.5.3.11.1	Changed
F.5.3.11.1.3	F.5.3.11.1.3	Changed
F.5.3.11.2	F.5.3.11.2	Changed
F.5.3.11.2.3	F.5.3.11.2.3	Changed
F.5.3.11.3.3	F.5.3.11.3.3	Changed
Figure F-2	Figure F-2	Changed
Figure F-9	Figure F-9	Changed
Figure F-11	Figure F-11	Changed
Figure F-12	Figure F-12	Changed
Figure F-13	Figure F-13	Changed
G.1.1	G.1.1	Changed
G.4.2	G.4.2	Changed
G.4.3	G.4.3	Changed
G.4.4	G.4.4	Changed
G.4.11	G.4.11	Changed
G.5.2.4	G.5.2.4	Changed
G.5.3	G.5.3	Changed
G.5.3.1	G.5.3.1	Chnaged
G.5.3.1.1	G.5.3.1.1	Changed
G.5.3.1.2	G.5.3.1.2	Changed
G.5.3.1.3 & boilerplate	G.5.3.1.3 & boilerplate	Changed
G.5.3.2	G.5.3.2	Changed
G.5.3.2.1	G.5.3.2.1	Changed
G.5.3.2.2	G.5.3.2.2	Changed
G.5.3.2.3 & boilerplate	G.5.3.2.3 & boilerplate	Changed
G.5.3.3	G.5.3.3	Changed
G.5.3.3.1	G.5.3.3.1	Changed
G.5.3.3.2	G.5.3.3.2	Changed
G.5.3.3.3	G.5.3.3.3	Changed
G.5.3.3.3b	G.5.3.3.3b	Changed
*	G.5.3.3.3e	Deleted
G.5.3.3.4	G.5.3.3.4	Changed
G.5.3.3.4d	G.5.3.3.4d	Changed
G.5.3.4	G.5.3.4	Changed
G.5.3.5	G.5.3.5	Changed
G.5.4	G.5.4	Changed
G.5.4.3.1 (boilerplate)	G.5.4.3.1 (boilerplate)	Changed
G.5.4.3.2 (boilerplate)	G.5.4.3.2 (boilerplate)	Changed
G.5.4.4.1	G.5.4.4.1	Changed

Source: https://assist.dla.mil -- Downloaded: 2016-12-09T23:24Z
Check the source to verify that this is the current version before use.

Current Para/Fig/Table Number	***Previous Para/Fig/Table Number***	***Action***
G.5.4.5	G.5.4.5	Changed
G.5.5	G.5.5	Changed
G.5.5.3.1 (boilerplate)	G.5.5.3.1 (boilerplate)	Changed
G.5.5.3.2 (boilerplate)	G.5.5.3.2 (boilerplate)	Changed
G.5.5.4	G.5.5.4	Changed
G.5.6	G.5.6	Added
G.5.6.1	*	Added
G.5.6.2	*	Added
G.5.6.3	*	Added
G.5.6.4	*	Added
G.5.7.3 (boilerplate)	G.5.6.3 (boilerplate)	Changed
G.5.8	G.5.7	Changed
G.5.8.3 (boilerplate)	G.5.7.3 (boilerplate)	Changed
G.5.9	G.5.8	Changed
G.5.9.3	G.5.9.3	Changed (Added MRPL intro boilerplate)
G.5.10	G.5.9	Changed
G.5.10.3	G.5.9.3	Changed
G.5.12.2	G.5.11.2	Changed
Figure G-1	Figure G-1	Changed
Figure G-2	Figure G-2	Changed
Figure G-3	Figure G-3	Changed
Figure G-4	Figure G-4	Changed
Figure G-5	Figure G-5	Changed
Figure G-6	Figure G-6	Changed
Figure G-9	Figure G-9	Changed
Figure G-10	Figure G-10	Changed
Figure G-11	*	Added
Figure G-15	Figure G-14	Changed
Figure G-16	Figure G-15	Changed
Figure G-17	Figure G-16	Changed
Figure G-18	Figure G-17	Changed
Figure G-19	*	Added
Figure G-20	Figure G-18	Changed
H.1.1	H.1.1	Changed
H.4.3	H.4.2.3	Changed
H.4.4	H.4.3	Changed
H.4.7	H.4.6	Changed
H.5.3.6	H.5.3.6	Changed
I.4.2	I.4.2	Changed
I.4.3	I.4.3	Changed
I.4.4	I.4.4	Changed
I.4.11	I.4.11	Changed

Source: https://assist.dla.mil -- Downloaded: 2016-12-09T23:24Z
Check the source to verify that this is the current version before use.

Current Para/Fig/Table Number	***Previous Para/Fig/Table Number***	***Action***
Figure I-1	Figure I-1	Changed
Figure I-4	Figure I-4	Changed
J.1.1	J.1.1	Changed
J.4.3	J.4.3	Changed
J.4.4	J.4.4	Changed
J.4.7	J.4.7	Changed
J.4.10	J.4.10	Changed
J.5.1	J.5.1	Changed
J.5.2	*	Added
J.5.2.1	*	Added
J.5.2.1.1	J.5.2	Changed
J.5.2.2	*	Added
*	J.5.3	Deleted
*	J.5.4	Deleted
*	J.5.5	Deleted
J.5.3	*	Added
J.5.4	*	Added
J.5.5	*	Added
Figure J-1	Figure J-1	Changed
K.1.1	K.1.1	Changed
K.4.3	K.4.3	Changed
K.4.4	K.4.4	Changed
K.4.12	K.4.12	Changed
K.5.1.1	*	Added
K.5.1.1.1	K.5.1.1	Changed
K.5.1.1.2	K.5.1.2	Changed
*	K.5.1.3	Deleted
K.5.1.1.3	K.5.5.1	Moved & para number changed
Table K-I	Table K-II	Moved & para number changed
K.5.1.1.4	K.5.6	Moved and para number changed
K.5.2	*	Added
K.5.2.1	K.5.2	Changed
K.5.2.1.1	K.5.2.1	Changed
K.5.2.1.4	K.5.2.4	Changed
K.5.2.1.5	K.5.2.5	Changed
K.5.2.1.6	*	Added
K.5.2.1.7	K.5.2.6	Changed
K.5.2.1.9	*	Added
K.5.2.1.10	*	Added
K.5.3	*	Added

Source: https://assist.dla.mil -- Downloaded: 2016-12-09T23:24Z
Check the source to verify that this is the current version before use.

Current Para/Fig/Table Number	***Previous Para/Fig/Table Number***	***Action***
K.5.3.1	*	Added
K.5.3.2	*	Added
K.5.3.3	K.5.3	Changed
K.5.3.3.1.1	K.5.3.3.1.1	Text deleted (last 2 sentences)
K.5.4	K.5.4	Changed
*	K.5.4.3	Deleted
*	Table K-I	Deleted
*	K.5.4.5	Deleted
*	K.5.4.6	Deleted
K.5.4.5	K.5.4.8	Changed
K.5.5	*	Added
K.5.5.1	*	Added
K.5.5.1.1	*	Added
K.5.5.1.2	*	Added
K.5.5.1.3	K.5.5	Changed
K.5.5.2	*	Added
K.5.5.2.1	*	Added
K.5.5.2.2	*	Added
K.5.5.2.3	K.5.7	Changed
K.5.5.2.3.1	K.5.7.1	Changed
K.5.5.3	*	Added
K.5.5.3.1	*	Added
K.5.5.3.2	*	Added
K.5.5.3.3	K.5.8	Changed
K.5.6.3	K.5.9.3	Changed
Figure K-1	Figure K-1	Changed
L.1.1	L.1.1	Changed
L.4.3	L.4.3	Changed
L.4.4	L.4.4	Changed
L.4.9	L.4.9	Changed
L.5.3	*	Added
L.5.3.2.4	L.5.4.4	Changed
L.5.4	*	Added
l.5.5	*	Added
L.5.6	L.5.7	Changed
L.5.6.3	L.5.7.3	Changed
Figure L-1	Figure L-1	Changed
Figure L-2	Figure L-2	Changed
Figure L-3	Figure L-3	Changed
Appendix M	*	Added
Appendix N	*	Added

Source: https://assist.dla.mil -- Downloaded: 2016-12-09T23:24Z
Check the source to verify that this is the current version before use.

TABLE OF CONTENTS

PARAGRAPH PAGE

FOREWORD ..... **ii**

1. SCOPE **1**
1.1 Scope. 1
1.2 Paragraphs with limited applicability 1
1.3 Use of the technical content 1
1.4 Examples/figures 1

2. APPLICABLE DOCUMENTS **1**
2.1 General 1
2.2 Government documents 1
2.2.1 Specifications, standards, and handbooks. 1
2.2.2 Other Government documents and publications 3
2.3 Non-Government publications. 5
2.4 Order of precedence. 6

3. DEFINITIONS **6**

4. GENERAL REQUIREMENTS **28**
4.1 General 28
4.2 Types of technical publications 28
4.3 Selective application and tailoring of content using Appendix A Matrixes 29
4.4 Preparation of digital data for electronic delivery 29
4.5 Use of the Army Document Type Definition (DTD)/style sheets 29
4.6 Obtaining the Army Document Type Definition (DTD)/style sheets 29
4.7 Style and format 30
4.7.1 Examples of style and format 30
4.7.2 TM divisions 30
4.7.2.1 Volume size and content 30
4.7.2.2 Chapters. 31
4.7.2.3 Work packages 31
4.7.2.3.1 Work package size. 31
4.7.3 Font size and style 31
4.7.4 Page size and orientation. 31
4.7.5 Foldout pages 32
4.7.6 Final Reproducible Copy (FRC) 32
4.7.7 Warnings, cautions, and notes 33
4.7.7.1 Warning **<warning>** 33
4.7.7.2 Caution **<caution>** 33
4.7.7.3 Notes **<note>** 33
4.7.7.4 Display of warnings, cautions, and notes 33
4.7.7.5 Icons **<icon-set>** 34
4.7.7.5.1 Development of icons 34

Source: https://assist.dla.mil -- Downloaded: 2016-12-09T23:24Z
Check the source to verify that this is the current version before use.

TABLE OF CONTENTS

PARAGRAPH PAGE

4.7.7.5.2 Safety warnings with icons **<icon-set>**. 34
4.7.7.5.3 Hazardous materials warnings **<warning>**. 34
4.7.7.5.3.1 Format for hazardous materials warnings with icons **<icon-set>**. 35
4.7.7.5.3.2 Abbreviated format for hazardous materials warnings with icons **<icon-set>**. 35
4.7.7.5.4 Equipment damage caution icons **<icon-set>**. 35
4.7.8 Chapters. 35
4.7.8.1 Chapter title page **<titlepg>** 35
4.7.8.2 Chapter numbering. 35
4.7.9 Work packages. 35
4.7.9.1 Work package number 35
4.7.9.2 Work package sequential numbering 37
4.7.9.2.1 Assignment of new work packages sequence numbers for a change 37
4.7.9.2.2 Deletion of work packages in a change. 37
4.7.9.2.3 Assignment of work package sequence numbers in volumized TMs. 37
4.7.9.3 Work package identification information **<wpidinfo>**. 37
4.7.9.3.1 Maintenance class **<maintlvl>** 37
4.7.9.3.2 Work package title **<title>** 38
4.7.9.3.3 Effectivity notice **<config>** 38
4.7.9.3.4 Joint use. 38
4.7.9.4 Initial setup information **<initial_setup>** 39
4.7.9.4.1 Test equipment **<testeqp>** 39
4.7.9.4.2 Tools **<tools>** 39
4.7.9.4.3 Special tools **<spectools>** 40
4.7.9.4.4 Materials **<mtrlpart>**. 40
4.7.9.4.5 Mandatory replacement parts **<mrp>** 41
4.7.9.4.6 Personnel required <**persnreq**> 41
4.7.9.4.7 References **<ref>** 41
4.7.9.4.8 Equipment conditions **<eqpconds>** 42
4.7.9.4.9 Special environmental conditions **<specenv>** 42
4.7.9.4.10 Drawings/diagrams/schematics required **<dwgreq>** 42
4.7.9.4.11 Estimated time to complete the task **<time.to.comp>** 42
4.7.9.5 End of task/work package statement 43
4.7.9.6 Work package page numbering 43
4.7.10 Paragraphs 43
4.7.10.1 Paragraph numbering. 43
4.7.10.2 Paragraphs and subparagraph titles. 43
4.7.10.2.1 Format 43
4.7.10.2.2 Continuation headers 44
4.7.11 Task titles. 44
4.7.12 Procedural steps 44

Source: https://assist.dla.mil -- Downloaded: 2016-12-09T23:24Z
Check the source to verify that this is the current version before use.

TABLE OF CONTENTS

PARAGRAPH PAGE

4.7.12.1 Procedural step levels. 44
4.7.12.2 Procedural step titles. 44
4.7.13 Tables and lists. 44
4.7.13.1 Placement of tables 44
4.7.13.2 Table numbering 45
4.7.13.3 Table titles. 45
4.7.13.4 Footnotes **<ftnote>** to tables 45
4.7.13.5 Table format. 45
4.7.13.6 Lists. 45
4.7.13.6.1 Definition list **<deflist>** 45
4.7.13.6.2 Random list **<randlist>** 45
4.7.13.6.3 Sequential list **<seqlist>** 45
4.7.13.7 Standard information 45
4.7.14 Placement of text. 46
4.7.15 Placement of illustrations. 46
4.7.15.1 Rotating illustrations. 47
4.7.15.2 Placement of text and related illustrations for pocket-sized TMs. 47
4.7.15.3 Repeating illustrations 47
4.7.16 Margin data 47
4.7.16.1 Headers. 47
4.7.16.2 Footers. 47
4.7.16.2.1 Page numbering. 47
4.7.16.2.1.1 Front matter. 47
4.7.16.2.1.2 Rear matter. 48
4.7.16.2.1.3 Blank pages. 48
4.7.16.2.1.4 Foldout page numbers. 48
4.7.17 Abbreviations and acronyms. 48
4.7.18 Symbols. 49
4.7.18.1 General information for symbols 49
4.7.18.2 Metric symbols. 49
4.7.19 Nuclear hardness (hardness-critical processes) marking. 49
4.7.20 Electrostatic Discharge (ESD) sensitive marking. 49
4.7.21 Quality Assurance (QA). 50
4.7.22 Special page markings. 50
4.7.22.1 Security classification 50
4.7.22.1.1 Classification guidelines 50
4.7.22.2 Emergency page markings 50
4.7.22.3 Protective markings 50
4.7.23 Referencing 50
4.7.23.1 Other documents **<extref>** 50
4.7.23.2 Within the TM **<xref>**. 51
4.7.23.2.1.1 TM divisions. 51
4.7.23.2.1.2 Volumes. 51

Source: https://assist.dla.mil -- Downloaded: 2016-12-09T23:24Z
Check the source to verify that this is the current version before use.

TABLE OF CONTENTS

PARAGRAPH PAGE

4.7.23.2.1.3 Maintenance tasks, procedures, and paragraphs. 51
4.7.23.3 Equipment, components, and parts 51
4.7.23.4 National Stock Numbers (NSNs) and Part Numbers (P/Ns) 51
4.7.23.5 Equipment panel markings (placarding). 51
4.7.23.6 Metric and United States (U.S.) standard measurements 51
4.7.23.7 Temperature 51
4.7.23.8 Tables 52
4.7.23.9 Figures and multisheet figures 52
4.7.23.10 Index numbers. 52
4.7.23.11 Nomenclature callouts 52
4.7.23.12 Items on diagrams 52
4.7.23.13 Footnotes 52
4.7.23.14 Repeating information 52
4.7.24 Equations 52
4.7.25 Nomenclature. 52
4.7.25.1 Nomenclature consistency and applicability 52
4.7.25.2 Official/approved nomenclature 53
4.7.25.3 Military terms 53
4.7.25.4 Automatic electronic test and checkout terminology 53
4.7.26 Comprehensibility 53
4.7.27 Graphics. 53
4.7.27.1 Graphic format 53
4.7.27.2 Types of graphics 53
4.7.27.2.1 Line drawings 53
4.7.27.2.2 Multiview and multisheet illustrations 54
4.7.27.2.3 Photographs 54
4.7.27.2.3.1 Photograph quality. 54
4.7.27.2.3.2 Retouching 54
4.7.27.2.3.3 Use of photographs in place of line drawings 54
4.7.27.2.4 Engineering drawings (**NMWRS/DMWRS only**). 54
4.7.27.2.5 Diagrams. 54
4.7.27.2.5.1 Diagram specifications 54
4.7.27.2.5.2 Types of diagrams 55
4.7.27.2.6 Charts and graphs 55
4.7.27.2.7 Tools and test equipment illustrations. 55
4.7.27.3 Elements of illustrations. 55
4.7.27.3.1 Border rules and boxes 55
4.7.27.3.2 Use of the human figure. 55
4.7.27.3.3 Credit lines. 55
4.7.27.3.4 Callouts. 55
4.7.27.3.4.1 Index numbers. 55
4.7.27.3.4.2 Leader lines and arrowheads 56
4.7.27.3.5 Illustration legends 56

Source: https://assist.dla.mil -- Downloaded: 2016-12-09T23:24Z
Check the source to verify that this is the current version before use.

TABLE OF CONTENTS

PARAGRAPH PAGE

4.7.27.3.6 Procedures on illustrations 56
4.7.27.4 Graphic techniques....56
4.7.27.4.1 Figure numbers. 56
4.7.27.4.2 Repair Parts and Special Tools List (RPSTL) figure numbering. 56
4.7.27.4.3 Foldout figure numbering. 56
4.7.27.4.4 Multisheet numbering 56
4.7.27.4.5 Figure titles 56
4.7.27.4.5.1 Figure title format. 57
4.7.27.4.5.2 Figure title placement 57
4.7.27.4.6 Illustration identification numbers 57
4.7.27.4.7 Portraying signal flow. 57
4.7.27.4.8 Use of color. 57
4.8 Changes/Revisions 57
4.8.1 Changes for TMs....57
4.8.1.1 Changes. 58
4.8.1.2 Changed work packages. 58
4.8.1.3 Changed front and rear matter pages. 58
4.8.1.4 Change symbols for text and tables. 58
4.8.1.5 Change symbols for illustrations. 58
4.8.1.6 Changes to Repair Parts and Special Tools List (RPSTL) work packages....59
4.8.2 Complete TM revisions....59

5. DETAILED REQUIREMENTS....60
5.1 Technical content preparation. 60
5.2 Preparation of front and rear matter 60
5.2.1 Front matter **<paper.frnt>**. 60
5.2.1.1 Front cover **<frntcover>**....61
5.2.1.1.1 TM number for joint service TMs **<tminfono>** 62
5.2.1.1.2 (MC) Publication control number (PCN) 62
5.2.1.1.3 National overhaul standards statement (**TMs/DMWRs/NMWRs with national overhaul standards only**)....62
5.2.1.1.4 Publication title **<prtitle>** 62
5.2.1.1.4.1 Model number **<modelno>** 62
5.2.1.1.4.2 National stock number **<nsn>** (Required)....62
5.2.1.1.4.3 Part number **<partno>**....62
5.2.1.1.4.4 End item code **<eic>** 63
5.2.1.1.5 Weapon system name **<weapons_system>**. 63
5.2.1.1.6 Equipment illustration **<graphic>** 63
5.2.1.1.7 Availability statement (DMWR/NMWR only) **<avail>**....63
5.2.1.1.8 Supersedure notice for revisions only **<super>** 63
5.2.1.1.9 Distribution statement **<dist>** 63

Source: https://assist.dla.mil -- Downloaded: 2016-12-09T23:24Z
Check the source to verify that this is the current version before use.

TABLE OF CONTENTS

PARAGRAPH PAGE

5.2.1.1.10 Export control notice warning **<export>**. 63
5.2.1.1.11 Destruction notice **<destr>** 63
5.2.1.1.12 General purpose notice **<general_purpose_notices>**. 63
5.2.1.1.12.1 Hazardous materials information notice 64
5.2.1.1.13 Service nomenclature **<servnomen>**. 64
5.2.1.1.14 Publication date **<date>**. 64
5.2.1.1.15 For Army Communications Security (COMSEC) manuals use. 64
5.2.1.2 Abbreviated front cover **<frntcover_abbreviated>** 64
5.2.1.3 (MC) Promulgation letter **<promulgation>**. 64
5.2.1.4 Warning summary **<warnsum>** 65
5.2.1.4.1 First aid **<first_aid>** 65
5.2.1.5 Change transmittal page **<chgsheet>** 65
5.2.1.6 List of effective pages/work packages **<loepwp>** 65
5.2.1.6.1 Types of publications. 65
5.2.1.6.2 Exempted publications. 66
5.2.1.6.3 Types of pages to be included 66
5.2.1.6.4 Exempted pages 66
5.2.1.6.5 Supersedure note (**Revisions only**) 66
5.2.1.6.6 Date of issue for original and changes 67
5.2.1.6.7 Total number of pages statement 67
5.2.1.6.8 Change numbers 67
5.2.1.6.9 Listing the pages. 67
5.2.1.6.10 Numbering the list of effective pages/work packages 67
5.2.1.6.11 List of effective pages/work packages for Repair Parts and Special Tools List (RPSTLs) 67
5.2.1.6.12 Multi-service manuals. 67
5.2.1.7 (A) Title page **<titleblk>** 67
5.2.1.7.1 Reporting errors and recommending improvements statement **<reporting>** 68
5.2.1.8 Preventive maintenance services and phased maintenance inspection manuals title page with warning data (**Aviation only**) 71
5.2.1.9 Table of contents **<contents>**. 71
5.2.1.10 "How To Use This Manual" information (**Except RPSTLs and DMWRs/NMWRs**) **<howtouse>** 72
5.2.1.10.1 International standardization agreements. 72
5.2.2 Rear matter **<rear>**. 73
5.2.2.1 Glossary (**Except RPSTL**) **<glossary>** 73
5.2.2.2 Alphabetical index (**Except RPSTL**) **<aindx>**. 73
5.2.2.3 Reporting errors and recommending improvements Department of the Army (DA) Form 2028 **<da2028>** 74
5.2.2.4 Authentication page **<authent>** 74
5.2.2.5 Foldout pages (**Except RPSTL**) **<foldsect>** 74

Source: https://assist.dla.mil -- Downloaded: 2016-12-09T23:24Z
Check the source to verify that this is the current version before use.

TABLE OF CONTENTS

PARAGRAPH PAGE

5.2.2.6 Back cover **<back>** 74
5.2.3 Multi-volume manuals 74
5.2.4 Combined manuals (multiple maintenance levels) 75
5.2.4.1 Front matter 75
5.2.4.2 General information 75
5.2.4.3 Operating, troubleshooting, and maintenance procedures 75
5.2.4.4 Supporting information 75

6. NOTES 75
6.1 Intended use 75
6.2 Acquisition requirements 75
6.3 Tailoring guidance 76
6.4 Subject term (key word) listing 76
6.5 Changes from previous issue. 76

A CONTENT SELECTION MATRIXES 117

A.1 SCOPE 117
A.1.1 Scope. 117

A.2 APPLICABLE DOCUMENTS 117

A.3 DEFINITIONS 117

A.4 GENERAL REQUIREMENTS 117

A.5 DETAILED REQUIREMENTS 117
A.5.1 Tailoring requirements for technical manuals 117
A.5.2 Publication Titles. 117
A.5.3 Technical content tables 121
A.5.3.1 Intended use 121
A.5.4 Acquisition requirements 122

B GENERAL INFORMATION, EQUIPMENT DESCRIPTION, AND THEORY OF OPERATION 221

B.1 SCOPE 221
B.1.1 Scope 221

B.2 APPLICABLE DOCUMENTS 221

B.3 DEFINITIONS 221

B.4 GENERAL REQUIREMENTS 221
B.4.1 General 221

Source: https://assist.dla.mil -- Downloaded: 2016-12-09T23:24Z
Check the source to verify that this is the current version before use.

TABLE OF CONTENTS

PARAGRAPH PAGE

B.4.2 Maintenance level/class applicability 221
B.4.3 Preparation of digital data for electronic delivery 221
B.4.4 Use of the Document Type Definition (DTD)/style sheet. 221
B.4.5 Content structure 222
B.4.6 Style and format 222
B.4.7 Work package development 222
B.4.8 Safety devices and interlocks. 222
B.4.9 Electrostatic Discharge (ESD) sensitive parts. 222
B.4.10 Nuclear hardness **<hcp>** 222
B.4.11 Selective application and tailoring of contents using Appendix A matrixes .222

B.5 DETAILED REQUIREMENTS 222
B.5.1 Preparation of general information, equipment description, and theory of operation 222
B.5.1.1 Required general information, equipment description, and theory of operation data work packages. 223
B.5.2 General information work package **<ginfowp>** 223
B.5.2.1 Work package identification information **<wpidinfo>**. 223
B.5.2.2 Work package initial setup **<initial_setup>** 223
B.5.2.3 Scope **<scope>** 223
B.5.2.4 Maintenance forms, records, and reports **<mfrr>** 223
B.5.2.5 Reporting equipment improvement recommendations **<eir>** 224
B.5.2.6 Hand Receipt (HR) manuals **<handreceipt>** 225
B.5.2.7 Corrosion prevention and control **<cpcdata>** 226
B.5.2.7.1 CPC structure 226
B.5.2.7.2 CPC boiler plate statement 226
B.5.2.7.3 SF Form 368 boiler plate statement 227
B.5.2.7.4 References to relevant tasks, work packages, and DA publications 227
B.5.2.8 Ozone Depleting Substances (ODSs) **<odsdata>** 228
B.5.2.9 Destruction of Army materiel to prevent enemy use **<destructmat>**. 228
B.5.2.10 Preparation for storage or shipment **<pssref>** 228
B.5.2.11 Transportability guidance 228
B.5.2.12 Warranty information **<wrntyref>** 228
B.5.2.13 Nomenclature cross-reference list **<nomenreflist>**. 228
B.5.2.14 List of abbreviations/acronyms **<loa>**. 228
B.5.2.15 Quality assurance (QA) (**DMWR/NMWR and aviation only**) **<qainfo>**. 229
B.5.2.16 Quality of material **<qual.mat.info>**. 229
B.5.2.17 Safety, care, and handling **<sftyinfo>**. 229
B.5.2.18 Nuclear hardness **<hcp>**. 230
B.5.2.19 Calibration **<calref>**. 230
B.5.2.20 Item unique identification (IUID) **<iuid>** 230

Source: https://assist.dla.mil -- Downloaded: 2016-12-09T23:24Z
Check the source to verify that this is the current version before use.

TABLE OF CONTENTS

PARAGRAPH PAGE

B.5.2.21 Engineering Change Proposals (ECPs) (**DMWR/NMWR only**) **<ecp>**. ...230
B.5.2.22 Modification list (**DMWR/NMWR only**) **<modification>**.....231
B.5.2.23 Deviations and exceptions (**DMWR/NMWR only**) **<deviation>**.....231
B.5.2.24 Mobilization requirements (**DMWR/NMWR only**) **<mobreq>**.....231
B.5.2.25 Critical safety items (CSI) **<csireq>** 231
B.5.2.26 Cost considerations (**DMWR/NMWR only**) **<cost>** 232
B.5.2.27 Supporting information for repair parts, special tools, Test, Measurement, and Diagnostic Equipment (TMDE), and support equipment **<supdata>**.....232
B.5.2.27.1 Common tools and equipment. 232
B.5.2.27.2 Special tools, Test, Measurement, and Diagnostic Equipment (TMDE), and support equipment.....233
B.5.2.27.3 Repair parts. 233
B.5.2.28 Copyright credit line **<copyrt>** 233
B.5.2.28.1 Proprietary names. 233
B.5.2.28.2 Advertising.....233
B.5.3 Equipment description and data work package **<descwp>**. 233
B.5.3.1 Work package identification information **<wpidinfo>**. 233
B.5.3.2 Work package initial setup **<initial_setup>**.....233
B.5.3.3 Equipment characteristics, capabilities, and features **<eqpinfo>**.....234
B.5.3.4 Location and description of major components **<locdesc>** 234
B.5.3.5 Equipment differences **<eqpdiff>**.....235
B.5.3.6 Equipment data **<eqpdata>**.....235
B.5.4 Theory of operation work package **<thrywp>**. 236
B.5.4.1 Work package identification information **<wpidinfo>**. 236
B.5.4.2 Work package initial setup **<initial_setup>**.....236
B.5.4.3 Theory presentation 236
B.5.5 General information work package (**Preventive Maintenance Services Manual or Preventive Maintenance Daily Manual only**) **<pms-ginfowp>** 237
B.5.5.1 Work package identification information **<wpidinfo>**. 237
B.5.5.2 Work package initial setup **<initial_setup>**.....237
B.5.5.3 Maintenance activities **<scope>**.....237
B.5.5.4 General information **<pms-geninfo>**.....237
B.5.6 General information work package (**Phased Maintenance Inspection manual only**) **<pm-ginfowp>** 239
B.5.6.1 Work package identification information **<wpidinfo>**. 239
B.5.6.2 Work package initial setup **<initial_setup>**.....239
B.5.6.3 General information **<geninfo>** 239
B.5.6.3.1 Phased schedule 239
B.5.6.3.2 Additional general information.....240

Source: https://assist.dla.mil -- Downloaded: 2016-12-09T23:24Z
Check the source to verify that this is the current version before use.

TABLE OF CONTENTS

PARAGRAPH PAGE

B.6 NOTES 242

C OPERATOR INSTRUCTIONS (EXCEPT AVIATION) 245

C.1 SCOPE 245
C.1.1 Scope. 245

C.2 APPLICABLE DOCUMENTS 245

C.3 DEFINITIONS 245

C.4 GENERAL REQUIREMENTS 245
C.4.1 General 245
C.4.2 Maintenance level/class applicability 245
C.4.3 Preparation of digital data for electronic delivery 245
C.4.4 Use of the Document Type Definition (DTD)/style sheet. 245
C.4.5 Content structure 246
C.4.6 Style and format 246
C.4.7 Work package development 246
C.4.8 Safety devices and interlocks 246
C.4.9 Electrostatic Discharge (ESD) sensitive part 246
C.4.10 Nuclear hardness **<hcp>**. 246
C.4.11 Selective application and tailoring of contents using Appendix A matrixes. 246

C.5 DETAILED REQUIREMENTS 246
C.5.1 Preparation of operator instructions. 246
C.5.2 Operator instructions work packages. 247
C.5.2.1 Work package content. 247
C.5.2.2 Types of operator instructions work packages. 247
C.5.2.2.1 Description and use of controls and indicators work package **<ctrlindwp>**. 247
C.5.2.2.1.1 Work package identification information **<wpidinfo>**. 247
C.5.2.2.1.2 Work package initial setup **<initial_setup>** 247
C.5.2.2.1.3 Controls and indicators description tabular option 248
C.5.2.2.1.4 Controls and indicators description narrative option 248
C.5.2.2.2 Operation under usual conditions work package **<opusualwp>** 248
C.5.2.2.2.1 Work package identification information **<wpidinfo>**. 248
C.5.2.2.2.2 Work package initial setup **<initial_setup>** 248
C.5.2.2.2.3 Operations under usual tasks **<opertsk>** 248
C.5.2.2.2.3.1 Security measures for electronic data **<secref>**. 248
C.5.2.2.2.3.2 Siting requirements **<site>** 249

Source: https://assist.dla.mil -- Downloaded: 2016-12-09T23:24Z
Check the source to verify that this is the current version before use.

TABLE OF CONTENTS

PARAGRAPH PAGE

C.5.2.2.2.3.3 Shelter requirements **<shelter>**.....249
C.5.2.2.2.3.4 Assembly and preparation for use **<prepforuse>**.....249
C.5.2.2.2.3.5 Initial adjustments before use and self-test **<initial>** 249
C.5.2.2.2.3.6 Operating procedures **<oper>**.....250
C.5.2.2.2.3.7 Operating procedure considerations. 250
C.5.2.2.2.3.8 Operating auxiliary equipment **<operaux>**.....251
C.5.2.2.2.3.9 Preparation for movement **<prepmove>**.....251
C.5.2.2.2.3.10 Decals and instruction plates **<instructplt>** 251
C.5.2.2.2.3 Operation under unusual conditions work package **<opunuwp>** 251
C.5.2.2.2.3.1 Work package identification information **<wpidinfo>**. 251
C.5.2.2.2.3.2 Work package initial setup **<initial_setup>**.....251
C.5.2.2.2.3.3 Operations under unusual tasks **<opunutsk>**. 251
C.5.2.2.2.3.3.1 Security measures for electronic data **<secref>**. 251
C.5.2.2.2.3.3.2 Unusual environment/weather **<unusualenv>**. 251
C.5.2.2.2.3.3.3 Fording and swimming **<fording>**.....252
C.5.2.2.2.3.3.4 Interim Chemical, Biological, Radiological, Nuclear, and Explosives (CBRNE) decontamination procedures **<decon>**.....252
C.5.2.2.2.3.3.5 Jamming and Electronic Countermeasures (ECM) procedures **<ecm>** 252
C.5.2.2.2.3.3.6 Degraded operation procedures **<degraded>** 252
C.5.2.2.2.3.3.7 Decals and instruction plates **<instructplt>**. 252
C.5.2.2.2.4 Emergency work package **<emergencywp>**.....252
C.5.2.2.2.4.1 Work package identification information **<wpidinfo>**. 252
C.5.2.2.2.4.2 Work package initial setup **<initial_setup>**.....252
C.5.2.2.2.4.3 Emergency operation **<emergency>**. 252
C.5.2.2.2.4.4 Emergency shutdown **<emergency>** 252
C.5.2.2.2.4.5 Vehicle recovery 252
C.5.2.2.2.5 Stowage and decal/data plate guide work package **<stowagewp>**. 252
C.5.2.2.2.5.1 Work package identification information **<wpidinfo>**. 253
C.5.2.2.2.5.2 Work package initial setup **<initial_setup>**.....253
C.5.2.2.2.5.3 Introduction **<intro>** 253
C.5.2.2.2.5.4 Stowage guide **<stowinfo>**. 253
C.5.2.2.2.5.5 Decal/data plate guide **<decalinfo>**. 253
C.5.2.2.2.6 On-vehicle equipment loading plan work package **<eqploadwp>** 253
C.5.2.2.2.6.1 Work package identification information **<wpidinfo>**. 253
C.5.2.2.2.6.2 Work package initial setup **<initial_setup>**.....253
C.5.2.2.2.6.3 Introduction **<intro>** 253
C.5.2.2.2.6.4 Illustrated loading plan list(s) **<loaddesc>**. 253

Source: https://assist.dla.mil -- Downloaded: 2016-12-09T23:24Z
Check the source to verify that this is the current version before use.

TABLE OF CONTENTS

PARAGRAPH PAGE

C.6 NOTES 253

D TROUBLESHOOTING PROCEDURES 255

D.1 SCOPE 255
D.1.1 Scope. 255

D.2 APPLICABLE DOCUMENTS 255

D.3 DEFINITIONS 255

D.4 GENERAL REQUIREMENTS 255
D.4.1 General. 255
D.4.2 Development of troubleshooting instructions 255
D.4.3 Maintenance level/class applicability. 256
D.4.4 Preparation of digital data for electronic delivery 256
D.4.5 Use of Document Type Definition (DTD)/style sheet 256
D.4.6 Content structure 256
D.4.7 Style and format 256
D.4.8 Work package development. 256
D.4.9 Safety devices and interlocks. 256
D.4.10 Electrostatic discharge (ESD) sensitive parts. 256
D.4.11 Nuclear hardness **<hcp>**. 257
D.4.12 Selective application and tailoring of contents using Appendix A matrixes. 257

D.5 DETAILED REQUIREMENTS 257
D.5.1 Testing and troubleshooting philosophy. 257
D.5.2 Information to be provided. 257
D.5.2.1 Methods of testing and troubleshooting. 258
D.5.2.1.1 Manual (non-automatic) troubleshooting. 258
D.5.2.1.2 Semi-automatic or automatic testing and troubleshooting. 258
D.5.2.1.3 Testing and troubleshooting using built-in-test equipment (BITE). 258
D.5.2.1.4 Sensor derived failures. 258
D.5.2.1.5 Failure interpretation. 258
D.5.2.2 Types of testing and troubleshooting information. 258
D.5.2.2.1 Fault reporting/fault isolation information. 258
D.5.2.2.2 Integrated system testing and troubleshooting. 259
D.5.2.2.2.1 Integrated systems having self-test or built-in test (BIT) capability 259
D.5.2.2.2.2 Integrated systems requiring the use of system peculiar test sets 259
D.5.2.2.2.3 Integrated systems requiring the use of common test equipment 259
D.5.3 Troubleshooting procedures content 259
D.5.4 Types of testing and troubleshooting 260

Source: https://assist.dla.mil -- Downloaded: 2016-12-09T23:24Z
Check the source to verify that this is the current version before use.

TABLE OF CONTENTS

PARAGRAPH PAGE

D.5.4.1 Aviation testing and troubleshooting category (**Aircraft Troubleshooting TMs only**) **<troubleaviationcategory>**.....260
D.5.4.2 Standard testing and troubleshooting category **<troublecategory>** 261
D.5.4.3 DMWR/NMWR testing and troubleshooting category (**depot only**) **<troubledmwrnmwrcategory>**.....261
D.5.4.4 Master index testing and troubleshooting category **<masterindexcategory>**. 261
D.5.5 Testing and troubleshooting work packages.....261
D.5.5.1 Work package content.....261
D.5.5.2 Types of testing and troubleshooting work packages. 262
D.5.5.3 Introduction work package **<tsintrowp>** 262
D.5.5.3.1 Work package identification information **<wpidinfo>** 262
D.5.5.3.2 Work package initial setup **<initial_setup>**.....262
D.5.5.4 Technical description work packages (**Aircraft Troubleshooting Manuals only**) **<techdescwp>**. 262
D.5.5.4.1 Work package identification information **<wpidinfo>**. 262
D.5.5.4.2 Work package initial setup **<initial_setup>**.....262
D.5.5.4.3 Equipment description and data **<descproc>**.....262
D.5.5.4.4 Controls and indicators **<ctrlindproc>**. 262
D.5.5.4.5 Theory of operation **<thryproc>**.....263
D.5.5.5 Troubleshooting index work package **<tsindxwp>**. 263
D.5.5.5.1 Work package identification information **<wpidinfo>**. 263
D.5.5.5.2 Work package initial setup **<initial_setup>**.....263
D.5.5.5.3 Malfunction/symptom index **<tsindx.symptom>**/**<tsindx.messageword>** 263
D.5.5.5.4 Master malfunction/symptom index **<tsindx.symptom>**. 263
D.5.5.5.5 System/subsystem index **<tsindx.system>**. 263
D.5.5.6 Preshop analysis work package (**DMWR/NMWR only**) **<pshopanalwp>**. 264
D.5.5.6.1 Work package identification information **<wpidinfo>**. 264
D.5.5.6.2 Work package initial setup **<initial_setup>**.....264
D.5.5.6.3 Scope **<scope>** 264
D.5.5.6.4 Preparation Procedures **<proc>**. 264
D.5.5.6.5 Preshop analysis procedures **<pshopanal>**. 264
D.5.5.6.5.1 Narrative procedures **<proc>** 264
D.5.5.6.5.2 Checklist **<chklist>**.....264
D.5.5.6.5.2.1 Cover sheet/frame **<coverpage>**.....265
D.5.5.6.5.2.2 Introduction **<intro>** 265
D.5.5.6.5.2.3 Table of tests and inspections **<pshopckk.tab>**.....265
D.5.5.7 Component checklist work package (**DMWR/NMWR only**) **<compchklistwp>**.....265

Source: https://assist.dla.mil -- Downloaded: 2016-12-09T23:24Z
Check the source to verify that this is the current version before use.

TABLE OF CONTENTS

PARAGRAPH PAGE

D.5.5.7.1 Work package identification information **<wpidinfo>**. 265
D.5.5.7.2 Work package initial setup **<initial_setup>**....265
D.5.5.7.3 Introduction **<intro>**....265
D.5.5.7.4 Component checklist **<compchklist>** 265
D.5.5.8 Operational checkout and troubleshooting procedures work packages....266
D.5.5.8.1 Operational checkout and troubleshooting procedures content. 266
D.5.5.8.2 Operational checkout and troubleshooting procedure work package development. 266
D.5.5.8.3 Operational checkout work package **<opcheckwp>** 266
D.5.5.8.3.1 Work package identification information **<wpidinfo>**. 267
D.5.5.8.3.2 Work package initial setup **<initial_setup>**....267
D.5.5.8.3.3 Introduction **<intro>**....267
D.5.5.8.3.4 General procedures and precautions **<proc>**....267
D.5.5.8.3.5 Pretest setup procedures **<hookup>**. 267
D.5.5.8.3.6 Operational checkout procedures **<opcheckproc>**. 267
D.5.5.8.3.6.1 Operational checkout test procedure **<opcheck>**. 267
D.5.5.8.3.6.2 Test set message word index **<messageindx>**. 267
D.5.5.8.3.6.3 Fault code reference index **<faultreports>**. 267
D.5.5.8.3.7 Post-operational shutdown procedures **<disconnect>**. 268
D.5.5.8.3.8 Follow-on maintenance **<follow-on>**. 268
D.5.5.8.4 Troubleshooting work package **<tswp>**. 268
D.5.5.8.4.1 Work package identification information **<wpidinfo>**. 268
D.5.5.8.4.2 Work package initial setup **<initial_setup>**....268
D.5.5.8.4.3 Introduction **<intro>**. 268
D.5.5.8.4.4 General procedures and precautions **<proc>**....268
D.5.5.8.4.5 Pretest setup procedures **<hookup>**. 268
D.5.5.8.4.6 Troubleshooting procedures **<tsproc>**. 268
D.5.5.8.4.6.1 Method A - Text-Logic **<logicproc>**. 269
D.5.5.8.4.6.2 Method B - Text **<faultproc>**. 269
D.5.5.8.4.6.3 Method C - Multiplex read codes **<muxproc>**....269
D.5.5.8.4.7 Post-operational shutdown procedures **<disconnect>**. 270
D.5.5.8.4.8 Follow-on maintenance **<follow-on>**. 270
D.5.5.8.5 Combined operational checkout and troubleshooting work package **<opcheck-tswp>**....270
D.5.5.8.5.1 Work package identification information **<wpidinfo>**. 270
D.5.5.8.5.2 Work package initial setup **<initial_setup>**....270
D.5.5.8.5.3 Introduction **<intro>**. 270
D.5.5.8.5.4 General procedures and precautions **<proc>**....270
D.5.5.8.5.5 Pretest setup procedures **<hookup>**. 270
D.5.5.8.5.6 Operational checkout and troubleshooting procedures. 270

Source: https://assist.dla.mil -- Downloaded: 2016-12-09T23:24Z
Check the source to verify that this is the current version before use.

TABLE OF CONTENTS

PARAGRAPH PAGE

D.5.5.8.5.6.1 Combined operational checkout and troubleshooting procedures **<opcheck-tsproc>**. 270
D.5.5.8.5.6.2 Separate operational checkout procedures **<opcheckproc>**....271
D.5.5.8.5.6.3 Separate troubleshooting procedure **<tsproc>**. 271
D.5.5.8.5.7 Post-operational shutdown procedures **<disconnect>**. 271
D.5.5.8.5.8 Follow-on maintenance **<follow-on>**. 271
D.5.5.8.6 Integrated system troubleshooting procedures work packages....271

D.6 NOTES....271

E MAINTENANCE INSTRUCTIONS....285

E.1 SCOPE....285
E.1.1 Scope....285

E.2 APPLICABLE DOCUMENTS....285

E.3 DEFINITIONS....285

E.4 GENERAL REQUIREMENTS....285
E.4.1 General....285
E.4.2 Development of maintenance instructions....285
E.4.3 Maintenance level/class applicability. 285
E.4.4 Depot Maintenance Work Requirements (DMWRs) and National Maintenance Work Requirements (NMWRs). 285
E.4.5 Preparation of digital data for electronic delivery. 286
E.4.6 Use of the Document Type Definition (DTD)/style sheet....286
E.4.7 Content structure....286
E.4.8 Style and format....286
E.4.9 Work package development....286
E.4.10 Safety devices and interlocks....286
E.4.11 Electrostatic discharge (ESD) sensitive parts. 286
E.4.12 Nuclear hardness....287
E.4.13 Selective application and tailoring of content using Appendix A matrixes...287

E.5 DETAILED REQUIREMENTS....287
E.5.1 Preparation of maintenance instructions....287
E.5.2 Types of maintenance. 287
E.5.2.1 Preventive Maintenance Checks and Services (PMCS) (**except for aircraft TMs, DMWRs, and NMWRs**) **<pmcscategory>**....287
E.5.2.2 Weapon system/equipment maintenance with required Preventive Maintenance Checks and Services (PMCS) (**except for aircraft TMs, DMWRs, and NMWRs**) **<maintenancepmcscategory>**....287

Source: https://assist.dla.mil -- Downloaded: 2016-12-09T23:24Z
Check the source to verify that this is the current version before use.

TABLE OF CONTENTS

PARAGRAPH PAGE

E.5.2.3 Weapon system/equipment maintenance without Preventive Maintenance Checks and Services (PMCS) (**except for aircraft TMs, DMWRs, and NMWRs**) **<maintenancecategory>**.....288
E.5.2.4 Depot weapon system/equipment maintenance **<depotcategory>**. ..288
E.5.2.5 Aircraft maintenance (**aircraft TMs, DMWRs, and NMWRs only**) **<aviationcategory>**.....289
E.5.2.6 Auxiliary equipment maintenance **<auxiliarycategory>**.....289
E.5.2.7 Ammunition maintenance **<ammunitioncategory>**. 290
E.5.2.8 Test and inspection maintenance (**Ammunition only**) **<testinspectioncategory>**.....290
E.5.2.9 Shipment/movement and storage maintenance (**Ammunition only**) **<shipmentmovementstoragecategory>**.....290
E.5.2.10 Ammunition marking maintenance (**Ammunition only**) **<ammomarkingcategory>**. 290
E.5.2.11 Preventive maintenance services (**Aircraft preventive maintenance services only**) **<pmscategory>**.....290
E.5.2.12 Phased maintenance inspections (**aircraft phased maintenance inspection only**) **<checklistcategory>**.....290
E.5.2.13 Software maintenance **<softmaintcategory>**.....290
E.5.2.14 General maintenance **<genmaintcategory>**.....290
E.5.3 Maintenance work packages. 290
E.5.3.1 Work package content. 290
E.5.3.2 Service upon receipt work package (**Maintainer and AMC only**) **<surwp>**. 291
E.5.3.2.1 Work package identification information **<wpidinfo>**.....291
E.5.3.2.2 Work package initial setup **<initial_setup>**. 291
E.5.3.2.3 Service upon receipt tasks **<surtsk>**. 291
E.5.3.2.3.1 Siting **<siting>**. 291
E.5.3.2.3.2 Shelter requirements **<shltr>**. 292
E.5.3.2.3.3 Service upon receipt of materiel **<surmat>**. 292
E.5.3.2.3.3.1 Unpacking **<unpack>**. 292
E.5.3.2.3.3.2 Checking unpacked equipment **<chkeqp>**. 292
E.5.3.2.3.3.2.1 Packaging material **<crit.insp.tab>**. 292
E.5.3.2.3.3.2.2 Equipment components **<pecul.insp.tab>**. 292
E.5.3.2.3.3.3 Processing unpacked equipment **<processeqp>**.....293
E.5.3.2.3.4 Installation instructions **<install>**.....293
E.5.3.2.3.4.1 Installation of the equipment. 293
E.5.3.2.3.4.2 Special applications. 294
E.5.3.2.3.4.3 Van and shelter installations.....294
E.5.3.2.3.4.4 Assembly of equipment **<assem>**. 294

Source: https://assist.dla.mil -- Downloaded: 2016-12-09T23:24Z
Check the source to verify that this is the current version before use.

TABLE OF CONTENTS

PARAGRAPH		PAGE
E.5.3.2.3.5	Preliminary servicing of equipment **<preserv>**	295
E.5.3.2.3.6	Preliminary checks and adjustment of equipment **<prechkadj>**	295
E.5.3.2.3.7	Preliminary calibration of equipment **<precal>**	296
E.5.3.2.3.8	Circuit alignment **<calign>**	296
E.5.3.2.3.8.1	External connections **<extconn>**	296
E.5.3.2.3.8.2	Switch settings, patch panel connections, and internal control settings	296
E.5.3.2.3.8.3	Alignment procedures **<alignproc>**	296
E.5.3.2.3.9	Ammunition service upon receipt tasks.	296
E.5.3.2.3.9.1	Ammunition markings **<mark>**	296
E.5.3.2.3.9.2	Classification of defects **<ammo.defect>**	296
E.5.3.2.3.9.3	Handling **<ammo.handling>**	296
E.5.3.2.3.9.4	Procedures needed to activate ammunition, mines, etc. **<arm>**	296
E.5.3.2.3.10	Other service upon receipt tasks **<other.surtsk>**	296
E.5.3.2.3.11	Follow-on maintenance **<followon.maintsk>**	297
E.5.3.3	Equipment/user fitting instructions work package **<perseqpwp>**	297
E.5.3.3.1	Work package identification **<wpidinfo>**	297
E.5.3.3.2	Work package initial setup **<initial_setup>**	297
E.5.3.4	Preventive Maintenance Checks and Services (PMCS) (**except for aircraft TMs, DMWRs, and NMWRs**)	297
E.5.3.4.1	Preventive Maintenance Checks and Services (PMCS) introduction work package **<pmcsintrowp>**	297
E.5.3.4.1.1	Work package identification information **<wpidinfo>**	297
E.5.3.4.1.2	Work package initial setup **<initial_setup>**	297
E.5.3.4.1.3	Preventive Maintenance Checks and Services (PMCS) data.	297
E.5.3.4.2	Preventive Maintenance Checks and Services (PMCS) work package **<pmcswp>**	298
E.5.3.4.2.1	Work package identification information **<wpidinfo>**	298
E.5.3.4.2.2	Work package initial setup **<initial_setup>**	298
E.5.3.4.2.3	Preventive Maintenance Checks and Services (PMCS) procedures.	298
E.5.3.4.2.3.1	Preventive Maintenance Checks and Services (PMCS) data preparation **<pmcstable>**	299
E.5.3.4.2.3.1.1	Item number **<itemno>**	299
E.5.3.4.2.3.1.2	Intervals **<interval>**	299
E.5.3.4.2.3.1.3	Man-hours **<manhours>**	299
E.5.3.4.2.3.1.4	Item to be checked or serviced **<checked>**	300
E.5.3.4.2.3.1.5	Procedure **<pmcsproc>**	300
E.5.3.4.2.3.1.6	Not mission capable if: **<eqpnotavail>**	300
E.5.3.4.2.4	Mandatory replacement parts **<mrplpart>**	300
E.5.3.4.3	Preventive Maintenance Checklist (PMC).	300

Source: https://assist.dla.mil -- Downloaded: 2016-12-09T23:24Z
Check the source to verify that this is the current version before use.

TABLE OF CONTENTS

PARAGRAPH PAGE

E.5.3.5 Maintenance work packages (**not required for aircraft PM and PMS manuals**) **<maintwp>**. 300
E.5.3.5.1 Work package identification information **<wpidinfo>**. 301
E.5.3.5.2 Work package initial setup **<initial_setup>**....301
E.5.3.5.3 Maintenance tasks **<maintsk>**. 301
E.5.3.5.3.1 Maintenance task requirements....303
E.5.3.5.3.2 Inspect **<inspect>**. 304
E.5.3.5.3.2.1 Inspect during assembly....304
E.5.3.5.3.2.2 Inspection of ammunition, or components including those that contain radioactive materials (**Maintainer, below depot sustainment, or ASB only**). 304
E.5.3.5.3.2.2.1 Specific instructions for inspection of radioactive ammunition, chemical ammunition, or components....304
E.5.3.5.3.2.2.2 Specific instructions for inspection of non-radioactive ammunition, chemical ammunition, or components....305
E.5.3.5.3.2.3 Pre-embarkation inspection of materiel in units alerted for overseas movement. 306
E.5.3.5.3.2.4 Inspection of installed items....306
E.5.3.5.3.2.5 Inspection-acceptance and rejection criteria. 306
E.5.3.5.3.3 Test **<test>**....306
E.5.3.5.3.4 Service **<service>**. 307
E.5.3.5.3.5 Adjust **<adjust>**. 308
E.5.3.5.3.6 Align **<align>**. 308
E.5.3.5.3.7 Calibrate **<calibration>**. 308
E.5.3.5.3.8 Remove **<remove>**. 308
E.5.3.5.3.9 Install **<install>**. 308
E.5.3.5.3.10 Replace **<replace>**. 309
E.5.3.5.3.11 Repair **<repair>**. 309
E.5.3.5.3.12 Paint **<paint>**. 309
E.5.3.5.3.13 Overhaul **<overhaul>**. 309
E.5.3.5.3.14 Rebuild **<rebuild>**....309
E.5.3.5.3.15 Lubricate **<lube>**. 309
E.5.3.5.3.16 Mark **<mark>**. 309
E.5.3.5.3.17 Pack **<pack>**. 310
E.5.3.5.3.18 Unpack **<unpack>**. 310
E.5.3.5.3.19 Preserve **<preservation>**....310
E.5.3.5.3.20 Prepare for use **<prepforuse>**. 311
E.5.3.5.3.21 Assemble **<assem>**. 311
E.5.3.5.3.22 Disassemble **<disassem>**....311
E.5.3.5.3.23 Clean **<clean>**. 312
E.5.3.5.3.24 Nondestructive Inspection (NDI) **<ndi>**. 312

Source: https://assist.dla.mil -- Downloaded: 2016-12-09T23:24Z
Check the source to verify that this is the current version before use.

TABLE OF CONTENTS

PARAGRAPH PAGE

E.5.3.5.3.25 Radio interference suppression **<ris>**. 313
E.5.3.5.3.26 Place in service **<pis>**. 313
E.5.3.5.3.27 Towing **<tow>**. 313
E.5.3.5.3.28 Jacking **<jack>**. 313
E.5.3.5.3.29 Parking **<park>**. 313
E.5.3.5.3.30 Mooring **<moor>**. 313
E.5.3.5.3.31 Covering **<cover>**. 313
E.5.3.5.3.32 Hoisting **<hoist>**. 314
E.5.3.5.3.33 Sling loading **<sling>**. 314
E.5.3.5.3.34 External power **<extpwr>**. 314
E.5.3.5.3.35 Preparation for storage **<prepstore>**. 314
E.5.3.5.3.36 Preparation for shipment **<prepship>** 314
E.5.3.5.3.37 Transport **<transport>** 315
E.5.3.5.3.38 Arm **<arm>**. 315
E.5.3.5.3.39 Load **<load>**. 315
E.5.3.5.3.40 Unload **<unload>** 315
E.5.3.5.3.41 Install peripheral device **<installperdev>** 316
E.5.3.5.3.42 Uninstall peripheral device **<ininstallperdev>** 316
E.5.3.5.3.43 Upgrade/patch **<upgrade>** 316
E.5.3.5.3.44 Configure **<configure>** 316
E.5.3.5.3.45 Debug **<debug>** 316
E.5.3.5.3.46 Additional maintenance tasks **<other.maintsk>**. 316
E.5.3.5.3.47 Follow-on maintenance task **<followon.maintsk>**. 316
E.5.3.6 Overhaul and retirement schedule work package (**aircraft only**) **<orschwp>**. 316
E.5.3.6.1 Work package identification information **<wpidinfo>**. 316
E.5.3.6.2 Work package initial setup **<initial_setup>** 316
E.5.3.6.3 Overhaul and retirement schedule **<orsch>** 316
E.5.3.7 General maintenance work package **<gen.maintwp>** 317
E.5.3.7.1 Work package identification information **<wpidinfo>**. 317
E.5.3.7.2 Work package initial setup **<initial_setup>** 317
E.5.3.7.3 Maintenance procedure **<proc>** 317
E.5.3.8 Lubrication instructions work package **<lubewp>** 317
E.5.3.8.1 Work package identification information **<wpidinfo>**. 317
E.5.3.8.2 Work package initial setup **<initial_setup>** 317
E.5.3.8.3 Lubrication instructions 317
E.5.3.8.4 Lubrication charts 317
E.5.3.9 DMWR/NMWR specific maintenance work packages. 318
E.5.3.9.1 Preservation, packaging, and marking general information work package **<ppmgeninfowp>** 318
E.5.3.9.1.1 Work package identification information **<wpidinfo>** 318

Source: https://assist.dla.mil -- Downloaded: 2016-12-09T23:24Z
Check the source to verify that this is the current version before use.

TABLE OF CONTENTS

PARAGRAPH PAGE

E.5.3.9.1.2 Work package initial setup **<initial_setup>**.....318
E.5.3.9.1.3 Preservation, packaging, and marking general information 318
E.5.3.9.2 Facilities work package **<facilwp>**.....320
E.5.3.9.2.1 Work package identification information **<wpidinfo>**. 320
E.5.3.9.2.2 Work package initial setup **<initial_setup>**.....320
E.5.3.9.3 Overhaul inspection procedures (OIPs) work package **<oipwp>**. 320
E.5.3.9.3.1 Work package identification information **<wpidinfo>**. 321
E.5.3.9.3.2 Work package initial setup **<initial_setup>**.....321
E.5.3.9.3.3 Overhaul Inspection Procedures (OIPs).....321
E.5.3.9.4 Depot mobilization requirements work package **<mobilwp>**. 321
E.5.3.9.4.1 Work package identification information **<wpidinfo>**. 321
E.5.3.9.4.2 Work package initial setup **<initial_setup>**.....321
E.5.3.9.4.3 Introduction for depot mobilization requirements work package **<intro>**.....321
E.5.3.9.4.4 Mobilization requirements **<mobilreq>**.....322
E.5.3.9.5 QA requirements work package **<qawp>**.....322
E.5.3.9.5.1 Work package identification information **<wpidinfo>**. 322
E.5.3.9.5.2 Work package initial setup **<initial_setup>**.....322
E.5.3.9.5.3 Statement of responsibility **<responsibility>**.....322
E.5.3.9.5.4 Definitions **<definitions>**.....322
E.5.3.9.5.5 Special requirements for inspection tools and equipment **<specialreq>**.....322
E.5.3.9.5.6 Certification requirements **<certreq>**.....322
E.5.3.9.5.7 Quality program **<quality-program>**.....322
E.5.3.9.5.8 In-process inspections **<inprocess>**. 322
E.5.3.9.5.9 Acceptance inspections **<acceptance>**.....323
E.5.3.9.5.10 First article inspection **<first>**. 323
E.5.3.10 Illustrated list of manufactured items (**Maintainer/AMC and above**). 323
E.5.3.10.1 Illustrated list of manufactured items introduction work package **<manu_items_introwp>**.....323
E.5.3.10.1.1 Work package identification information **<wpidinfo>**. 323
E.5.3.10.1.2 Work package initial setup **<initial_setup>**.....323
E.5.3.10.1.3 Introduction for illustrated list of manufactured items work package **<intro>**.....323
E.5.3.10.1.4 Index of manufactured items **<manuindx>**.....324
E.5.3.10.2 Manufacturing procedure work package **<manuwp>**.....324
E.5.3.10.2.1 Work package identification information **<wpidinfo>**. 324
E.5.3.10.2.2 Work package initial setup **<initial_setup>**.....324
E.5.3.10.2.3 Instructions for manufactured items **<manuitem>**. 324
E.5.3.11 Torque limits work package (**Maintainer/AMC and above**) **<torquewp>**.....325

Source: https://assist.dla.mil -- Downloaded: 2016-12-09T23:24Z
Check the source to verify that this is the current version before use.

TABLE OF CONTENTS

PARAGRAPH PAGE

E.5.3.11.1 Work package identification information **<wpidinfo>**. 325
E.5.3.11.2 Work package initial setup **<initial_setup>**.....325
E.5.3.11.3 Introduction **<intro>**. 325
E.5.3.11.4 Torque instructions **<torqueval>**. 325
E.5.3.12 Wiring diagrams work package (**Maintainer/AMC and above**) **<wiringwp>**.....325
E.5.3.12.1 Work package identification information **<wpidinfo>**. 325
E.5.3.12.2 Work package initial setup **<initial_setup>**.....325
E.5.3.12.3 Introduction **<intro>**. 325
E.5.3.12.3.1 Wiring diagrams index.....325
E.5.3.12.4 Abbreviations **<abbrev>**.....326
E.5.3.12.5 Component descriptions with related schematic locations table **<component_desc>** 326
E.5.3.12.6 Wire identification **<wireid>**. 326
E.5.3.12.6.1 SAE wire designations.....326
E.5.3.12.6.2 Wire color designations **<wire_color>** 326
E.5.3.12.7 Wiring diagrams **<wiringdiag>**.....326
E.5.3.13 Aircraft specific maintenance work packages. 326
E.5.3.13.1 Preventive maintenance inspections work package **<pmiwp>**. 326
E.5.3.13.1.1 Work package identification information **<wpidinfo>**. 326
E.5.3.13.1.2 Work package initial setup **<initial_setup>**.....326
E.5.3.13.1.3 General information and introduction **<geninfo>**. 326
E.5.3.13.1.4 Standards of serviceability. 327
E.5.3.13.1.5 Special inspections. 327
E.5.3.13.2 Aircraft inventory master guide work package **<inventorywp>**. 327
E.5.3.13.2.1 Work package identification information **<wpidinfo>**. 328
E.5.3.13.2.2 Work package initial setup **<initial_setup>**.....328
E.5.3.13.2.3 Introduction **<intro>**. 328
E.5.3.13.2.4 Security **<security>**. 328
E.5.3.13.2.5 Inventoriable items **<inventoriable>**.....328
E.5.3.13.2.6 Periods of inventory **<prdinv>**.....328
E.5.3.13.3 Storage of aircraft work package **<storagewp>**.....329
E.5.3.13.3.1 Work package identification information **<wpidinfo>**. 329
E.5.3.13.3.2 Work package initial setup **<initial_setup>**.....329
E.5.3.13.3.3 General information for storage of aircraft work package **<geninfo>**. 329
E.5.3.13.3.4 Flyable storage **<flyable>**, short term storage **<short>**, and intermediate storage **<intermediate>**. 329
E.5.3.13.4 Weighing and loading work package (ASB only) **<wtloadwp>**. 329
E.5.3.13.4.1 Work package identification information **<wpidinfo>**. 329
E.5.3.13.4.2 Work package initial setup **<initial_setup>**.....329
E.5.3.13.4.3 General information **<geninfo>**. 330

Source: https://assist.dla.mil -- Downloaded: 2016-12-09T23:24Z
Check the source to verify that this is the current version before use.

TABLE OF CONTENTS

PARAGRAPH PAGE

E.5.3.13.4.4 Weighing information **<formchart>**. 330
E.5.3.13.4.5 Loading information **<weightinst>**. 330
E.5.3.14 Auxiliary equipment maintenance work package **<auxeqpwp>**. 330
E.5.3.14.1 Work package identification information **<wpidinfo>**. 330
E.5.3.14.2 Work package initial setup **<initial_setup>**. 330
E.5.3.14.3 Auxiliary equipment procedures **<maintsk>/<proc>** 330
E.5.3.15 Ammunition specific work packages. 331
E.5.3.15.1 Ammunition maintenance work package **<ammowp>** 331
E.5.3.15.1.1 Work package identification information **<wpidinfo>** 331
E.5.3.15.1.2 Work package initial setup **<initial_setup>**. 331
E.5.3.15.1.3 Care and handling 331
E.5.3.15.1.3.1 Ammunition markings **<mark>** 331
E.5.3.15.1.3.2 Classification of defects **<ammo.defect>** 331
E.5.3.15.1.3.3 Handling **<ammo.handling>** 331
E.5.3.15.1.3.3.1 Unpacking **<unpack>** 331
E.5.3.15.1.3.3.2 Packing **<pack>** 331
E.5.3.15.1.4 Defective **<ammo.defect>**. 331
E.5.3.15.1.5 Cleaning and painting **<clean>** or **<paint>** 332
E.5.3.15.2 Ammunition marking information work package **<ammo.markingwp>** 332
E.5.3.15.2.1 Work package identification information **<wpidinfo>**. 332
E.5.3.15.2.2 Work package initial setup **<initial_setup>** 332
E.5.3.15.3 Foreign ammunition (NATO) work package **<natowp>** 332
E.5.3.15.3.1 Work package identification information **<wpidinfo>** 332
E.5.3.15.3.2 Work package initial setup **<initial_setup>** 332
E.5.3.16 Preventive maintenance services/Preventive maintenance daily inspection work packages (A**ircraft preventive maintenance services/preventive maintenance daily only**) **<pms-inspecwp>** or **<pmd-inspecwp>** 332
E.5.3.16.1 Work package identification information **<wpidinfo>**. 332
E.5.3.16.2 Work package initial setup **<initial_setup>** 332
E.5.3.16.3 Actuation warning 332
E.5.3.16.4 Mandatory safety-of-flight inspection items 333
E.5.3.16.5 Area diagram. 333
E.5.3.16.6 Standard checklists 333
E.5.3.17 Phased maintenance inspection work package (A**ircraft phased maintenance checklist only**) **<pmi-cklistwp>** 333
E.5.3.17.1 Work package identification information **<wpidinfo>** 333
E.5.3.17.2 Work package initial setup **<initial_setup>** 333
E.5.3.17.3 Inspection area diagrams **<figure>** 334
E.5.3.17.4 Phased maintenance checklist. 334

Source: https://assist.dla.mil -- Downloaded: 2016-12-09T23:24Z
Check the source to verify that this is the current version before use.

TABLE OF CONTENTS

PARAGRAPH PAGE

E.6 NOTES 334

F REPAIR PARTS AND SPECIAL TOOLS LIST (RPSTL) 355

F.1 SCOPE 355
F.1.1 Scope. 355

F.2 APPLICABLE DOCUMENTS 355

F.3 DEFINITIONS 355

F.4 GENERAL REQUIREMENTS 355
F.4.1 General. 355
F.4.2 Maintenance level/class applicability. 355
F.4.3 Preparation of digital data for electronic delivery. 355
F.4.4 Use of the Document Type Definition (DTD)/style sheet. 356
F.4.5 Content structure. 356
F.4.6 Style and format. 356
F.4.7 Work package development. 356
F.4.8 Selective application and tailoring of content using Appendix A matrixes 356

F.5 DETAILED REQUIREMENTS 356
F.5.1 General. 356
F.5.2 Repair Parts and Special Tool List (RPSTL) development. 356
F.5.3 Preparation of Repair Parts and Special Tool Lists (RPSTL) 356
F.5.3.1 Separate RPSTL TM. 356
F.5.3.2 RPSTL chapter **<pim>**. 357
F.5.3.3 RPSTL work packages requirements. 357
F.5.3.3.1 RPSTL work packages **<pim>** included in a maintenance TM. 357
F.5.3.3.2 RPSTL work packages included in a DMWR/NMWR. 357
F.5.3.3.2.1 Depot repair parts. 357
F.5.3.4 Repair parts list, special tools, and kits work package layout. 358
F.5.3.5 Introduction work package **<introwp>**. 358
F.5.3.5.1 Work package identification information **<wpidinfo>**. 358
F.5.3.5.2 Work package initial setup **<initial_setup>** 358
F.5.3.5.3 Introduction. 358
F.5.3.5.3.1 Non aviation Repair Parts and Special Tool List (RPSTL) introduction 358
F.5.3.5.3.2 Aviation Repair Parts and Special Tool List (RPSTL) introduction. 367
F.5.3.5.3.3 (MC) Marine Corps only RPSTL introduction 374
F.5.3.5.3.4 Indexed Repair Parts and Special Tool List (RPSTL) illustration and legend **<Figure>**. 382
F.5.3.6 Repair parts list work package **<plwp>**. 382
F.5.3.6.1 Work package identification information **<wpidinfo>**. 382

Source: https://assist.dla.mil -- Downloaded: 2016-12-09T23:24Z
Check the source to verify that this is the current version before use.

TABLE OF CONTENTS

PARAGRAPH PAGE

F.5.3.6.2 Work package initial setup **<initial_setup>**.....382
F.5.3.6.3 Repair parts list **<pi.category>**. 382
F.5.3.6.3.1 Repair parts Figure title **<title>**.....383
F.5.3.6.3.2 Repair part item **<pi.item>**. 383
F.5.3.6.3.2.1 Item number column **<callout>**.....383
F.5.3.6.3.2.2 Source, Maintenance, and Recoverability (SMR) code column **<smr>**.....383
F.5.3.6.3.2.3 National Stock Number (NSN) column **<nsn>**. 383
F.5.3.6.3.2.4 Commercial And Government Entity Code (CAGEC) column **<cageno>** 383
F.5.3.6.3.2.5 Part number column **<partno>**.....383
F.5.3.6.3.2.6 Description and Usable On Code (UOC) column.....383
F.5.3.6.3.2.6.1 Functional group header **<fncgrp>** 383
F.5.3.6.3.2.6.2 Item name **<name>** 383
F.5.3.6.3.2.6.3 Description <**desc**> 383
F.5.3.6.3.2.6.4 Indentions.....384
F.5.3.6.3.2.6.5 Usable On Code (UOC) **<uoc>**.....384
F.5.3.6.3.2.6.6 Serial number application **<usbefserno>** 384
F.5.3.6.3.2.6.7 Assembled items 384
F.5.3.6.3.2.6.8 Manufactured items. 384
F.5.3.6.3.2.6.9 Kits and kit repair parts.....384
F.5.3.6.3.2.6.10 End of figure statement.....385
F.5.3.6.3.2.7 Quantity column **<qty>**.....385
F.5.3.6.3.2.8 (MC) United States Marine Corp. (USMC) quantity per equipment column **<qty_per_end_item>** 385
F.5.3.6.3.2.9 Mandatory replacement **<mrp>** 385
F.5.3.6.3.2.10 Unit of issue **<ui>** 385
F.5.3.6.3.2.10.1 Unit of measure 'um' 385
F.5.3.6.3.2.11 Reference designator **<refdes>** 385
F.5.3.6.3.2.12 Next higher assembly **<nha_item>**.....385
F.5.3.6.3.2.12.1 Parts breakdown reference **<part.breakdown.ref>**.....385
F.5.3.6.4 Basic Issue Items (BII) (repair parts).....386
F.5.3.6.5 Expendable and durable items. 386
F.5.3.7 Repair parts for special tools list work package **<stl_partswp>** 386
F.5.3.7.1 Work package identification information **<wpidinfo>** 386
F.5.3.7.2 Work package initial setup **<initial_setup>**.....386
F.5.3.7.3 Special tools repair parts items list **<pi.category>** 386
F.5.3.7.3.1 Functional group header **<fncgrp>** 386
F.5.3.8 Kit parts list work package **<kitswp>** 386
F.5.3.8.1 Work package identification information **<wpidinfo>** 387
F.5.3.8.2 Work package initial setup **<initial_setup>**.....387

Source: https://assist.dla.mil -- Downloaded: 2016-12-09T23:24Z
Check the source to verify that this is the current version before use.

TABLE OF CONTENTS

PARAGRAPH PAGE

F.5.3.8.3 Kits part items list **<pi.category>** 387
F.5.3.8.3.1 Functional group header **<fncgrp>** 387
F.5.3.8.3.2 Kit part item group **<kititem>** 387
F.5.3.8.3.3 Kits part item quantity **<qty>** 387
F.5.3.9 Bulk items work package **<bulk_itemswp>** 387
F.5.3.9.1 Work package identification information **<wpidinfo>** 387
F.5.3.9.2 Work package initial setup **<initial_setup>** 387
F.5.3.9.3 Bulk item **<pi.item>** 387
F.5.3.9.3.1 ITEM column **<callout>** 387
F.5.3.9.3.2 Functional group header **<fncgrp>** 387
F.5.3.10 Special tools list work package **<stlwp>** 388
F.5.3.10.1 Work package identification information **<wpidinfo>**. 388
F.5.3.10.2 Work package initial setup **<initial_setup>** 388
F.5.3.10.3 Special tools list **<pi.category>** 388
F.5.3.10.3.1 Item number column 388
F.5.3.10.3.2 Functional group header **<fncgrp>** 388
F.5.3.10.3.3 D-coded items 388
F.5.3.10.3.4 Basis of Issue (BOI) **<boi>** 388
F.5.3.10.3.5 Quantity column 388
F.5.3.10.3.6 Components list **<kititem>** 388
F.5.3.11 Cross-reference index work packages 388
F.5.3.11.1 National stock number (NSN) index work package **<nsnindxwp>** 388
F.5.3.11.1.1 Work package identification information **<wpidinfo>**. 389
F.5.3.11.1.2 Work package initial setup **<initial_setup>** 389
F.5.3.11.1.3 National Stock Number (NSN) index **<nsnindx>**. 389
F.5.3.11.2 Part number index work package **<pnindxwp>** 389
F.5.3.11.2.1 Work package identification information **<wpidinfo>**. 389
F.5.3.11.2.2 Work package initial setup **<initial_setup>** 389
F.5.3.11.2.3 Part number index **<pnindx>** 389
F.5.3.11.3 Reference designator index work package **<refdesindxwp>** 389
F.5.3.11.3.1 Work package identification information **<wpidinfo>**. 389
F.5.3.11.3.2 Work package initial setup **<initial_setup>** 389
F.5.3.11.3.3 Reference designator index **<refdesindx>** 390
F.5.3.11.4 Bulk Figure reference 390
F.5.3.11.5 Sets and kits 390
F.5.3.12 Illustrations 390
F.5.3.12.1 Arrangement of illustrations. 390
F.5.3.12.2 Use of illustrations 390
F.5.3.12.3 Identical parts/item numbers 390
F.5.3.12.4 Identical assemblies 390

Source: https://assist.dla.mil -- Downloaded: 2016-12-09T23:24Z
Check the source to verify that this is the current version before use.

TABLE OF CONTENTS

PARAGRAPH PAGE

F.6 NOTES 391

G SUPPORTING INFORMATION 407

G.1 SCOPE 407
G.1.1 Scope. 407

G.2 APPLICABLE DOCUMENTS 407

G.3 DEFINITIONS 407

G.4 GENERAL REQUIREMENTS 407
G.4.1 General 407
G.4.2 Maintenance level/class applicability 407
G.4.3 Preparation of digital data for electronic delivery 407
G.4.4 Use of the Document Type Definition (DTD)/style sheet 407
G.4.5 Content structure 408
G.4.6 Style and format 408
G.4.7 Work package development 408
G.4.8 Safety devices and interlocks 408
G.4.9 Electrostatic Discharge (ESD) sensitive parts 408
G.4.10 Nuclear hardness **<hcp>**. 408
G.4.11 Selective application and tailoring of contents using Appendix A matrixes 408

G.5 DETAILED REQUIREMENTS 408
G.5.1 Preparation of supporting information 408
G.5.2 References work package **<refwp>** 409
G.5.2.1 Work package identification information **<wpidinfo>**. 409
G.5.2.2 Work package initial setup **<initial_setup>** 409
G.5.2.3 Scope **<scope>** 409
G.5.2.4 Publication list **<publist>** 409
G.5.3 Maintenance Allocation Chart (MAC) (**Maintainer/AMC only**) 409
G.5.3.1 Introduction for non-aviation Maintenance Allocation Chart (MAC) work package **<macintrowp>** 409
G.5.3.1.1 Work package identification information **<wpidinfo>** 409
G.5.3.1.2 Work package initial setup **<initial_setup>** 409
G.5.3.1.3 Introduction **<intro>** 409
G.5.3.2 Introduction for aviation Maintenance Allocation Chart (MAC) work package **<macintrowp>** 415
G.5.3.2.1 Work package identification information **<wpidinfo>** 415
G.5.3.2.2 Work package initial setup **<initial_setup>** 416
G.5.3.2.3 Introduction **<intro>** 416

Source: https://assist.dla.mil -- Downloaded: 2016-12-09T23:24Z
Check the source to verify that this is the current version before use.

TABLE OF CONTENTS

PARAGRAPH PAGE

G.5.3.3 Maintenance Allocation Chart (MAC) work package **<macwp>**. 422
G.5.3.3.1 Work package identification information **<wpidinfo>** 422
G.5.3.3.2 Work package initial setup **<initial_setup>**.....422
G.5.3.3.3 Maintenance Allocation Chart (MAC) entries.....422
G.5.3.3.4 Maintenance Allocation Chart (MAC) format.....423
G.5.3.4 Tools and test equipment requirements **<tereqtab>** 424
G.5.3.5 Remarks **<remarktab>**. 424
G.5.4 Components of End Item (COEI)/Basic Issue Items (BII) and Supply System Responsibility (SSR) lists work package (**crew (operator) only**) **<coeibiiwp>** 424
G.5.4.1 Work package identification information **<wpidinfo>**. 424
G.5.4.2 Work package initial setup **<initial_setup>**.....424
G.5.4.3 Introductions for COEI/BII and SSR lists work package **<intro>**. 424
G.5.4.3.1 (A) Introduction for COEI/BII.....424
G.5.4.3.2 (MC) Introduction for SSR 426
G.5.4.4 COEI/SSR list <**coei**> 428
G.5.4.4.1 List <**coeitab**> 428
G.5.4.5 (A) Basic Issue Items (BII) list **<bii>** 428
G.5.5 Additional Authorization List (AAL) and Using Unit Responsibility Items (UURI) work package (**crew (operator) only**) **<aalwp>** 428
G.5.5.1 Work package identification information **<wpidinfo>**. 428
G.5.5.2 Work package initial setup **<initial_setup>**.....429
G.5.5.3 AAL/UURI introductions **<intro>** 429
G.5.5.3.1 (A) AAL introduction 429
G.5.5.3.2 (MC) UURI introduction 430
G.5.5.4 AAL/UURI list **<aal>**.....430
G.5.6 (MC) Collateral Material (CM) Work Package 431
G.5.6.1 (MC) Work package identification information **<wpidinfo>** 431
G.5.6.2 (MC) Work package initial setup **<initial_setup>**.....431
G.5.6.3 (MC) Introduction for collateral material (CM) list work package 431
G.5.6.4 (MC) CM list.....432
G.5.7 Expendable and durable items list work package **<explistwp>**.....432
G.5.7.1 Work package identification information **<wpidinfo>**. 432
G.5.7.2 Work package initial setup **<initial_setup>**.....432
G.5.7.3 Introduction for expendable and durable items list work package **<intro>**.....432
G.5.7.4 Expendable and durable items list **<explist>**.....433
G.5.8 Tool identification list work package (**Maintainer/AMC and above**) **<toolidwp>**.....433
G.5.8.1 Work package identification information **<wpidinfo>**. 433
G.5.8.2 Work package initial setup **<initial_setup>**.....433

Source: https://assist.dla.mil -- Downloaded: 2016-12-09T23:24Z
Check the source to verify that this is the current version before use.

TABLE OF CONTENTS

PARAGRAPH PAGE

G.5.8.3 Introduction for tool identification list work package **<intro>** 433
G.5.8.4 Tool identification list **<toolidlist>** 434
G.5.9 Mandatory replacement parts list work package (**Maintainer/AMC and above**) **<mrplwp>**. 435
G.5.9.1 Work package identification information **<wpidinfo>**. 435
G.5.9.2 Work package initial setup **<initial_setup>**.....435
G.5.9.3 Introduction for mandatory replacement parts work package **<intro>**.....435
G.5.9.4 Mandatory replacement parts list **<mrpl>**. 436
G.5.10 Critical safety items (CSIs) work package **<csi.wp>** 436
G.5.10.1 Work package identification information **<wpidinfo>**. 436
G.5.10.2 Work package initial setup **<initial_setup>**.....436
G.5.10.3 Critical Safety Items (CSIs) **<csi>** 436
G.5.11 Support items work package **<supitemwp>** 436
G.5.11.1 Work package identification information **<wpidinfo>**. 436
G.5.11.2 Work package initial setup **<initial_setup>**.....436
G.5.11.3 Introduction **<intro>** 436
G.5.11.4 Support items lists.....436
G.5.12 Additional work packages **<genwp>**.....436
G.5.12.1 Work package identification information **<wpidinfo>**. 436
G.5.12.2 Work package initial setup **<initial_setup>**.....437

G.6 NOTES.....437

H DESTRUCTION OF ARMY MATERIEL TO PREVENT ENEMY USE.....459

H.1 SCOPE.....459
H.1.1 Scope.....459

H.2 APPLICABLE DOCUMENTS.....459

H.3 DEFINITIONS.....459

H.4 GENERAL REQUIREMENTS.....459
H.4.1 General.....459
H.4.2 Types of manuals. 459
H.4.2.1 Destruction manuals for a Federal Supply Classification (FSC).....459
H.4.2.2 Destruction manuals/work packages for weapon systems.....460
H.4.3 Preparation of digital data for electronic delivery 460
H.4.4 Use of the Document Type Definition (DTD)/style sheet. 460
H.4.5 Content structure.....460
H.4.6 Style and format.....460
H.4.7 Selective application and tailoring of contents using Appendix A matrixes .460
H.4.8 General destruction rules. 460

Source: https://assist.dla.mil -- Downloaded: 2016-12-09T23:24Z
Check the source to verify that this is the current version before use.

TABLE OF CONTENTS

PARAGRAPH PAGE

H.5 DETAILED REQUIREMENTS....461
H.5.1 Front and rear matter....461
H.5.2 General information work package **<ginfowp>**....461
H.5.2.1 Work package identification information **<wpidinfo>**....461
H.5.2.2 Work package initial setup **<initial_setup>**....461
H.5.3 Destruction introduction work package **<destruct-introwp>**....461
H.5.3.1 Work package identification information **<wpidinfo>**....461
H.5.3.2 Work package initial setup **<initial_setup>**....462
H.5.3.3 Authority to destroy materiel **<authorize_to_destroy>**....462
H.5.3.4 Reporting destruction **<report_destruct>**....462
H.5.3.5 General destruction information **<general_destruct_info>**....462
H.5.3.6 Degree of destruction **<degree_of_destruct>**....462
H.5.3.7 Essential components and spare parts **<component_spares>**....462
H.5.4 Destruction procedures work package **<destruct-materialwp>**....463
H.5.4.1 Work package identification information **<wpidinfo>**....463
H.5.4.2 Work package initial setup **<initial_setup>**....463
H.5.4.3 Parts list **<essential_spares>**....463
H.5.4.4 Specific destruction procedures **<proc>**....463
H.5.4.5 Classified equipment and documents....463

H.6 NOTES....463

I BATTLE DAMAGE ASSESSMENT AND REPAIR (BDAR)....465

I.1 SCOPE....465
I.1.1 Scope....465

I.2 APPLICABLE DOCUMENTS....465

I.3 DEFINITIONS....465

I.4 GENERAL REQUIREMENTS....465
I.4.1 Maintenance level....465
I.4.2 Maintenance level/class applicability....465
I.4.3 Preparation of digital data for electronic delivery....465
I.4.4 Use of the Document Type Definition (DTD)/style sheet....466
I.4.5 Content structure....466
I.4.6 Style and format....466
I.4.7 Work package development....466
I.4.8 Safety devices and interlocks....466
I.4.9 Electrostatic Discharge (ESD) sensitive parts....466

Source: https://assist.dla.mil -- Downloaded: 2016-12-09T23:24Z
Check the source to verify that this is the current version before use.

TABLE OF CONTENTS

PARAGRAPH PAGE

I.4.10 Nuclear hardness **<hcp>** 466
I.4.11 Selective application and tailoring of contents using Appendix A matrixes .466

I.5 DETAILED REQUIREMENTS....467
I.5.1 Content 467
I.5.1.1 Operating procedures 467
I.5.2 Front and rear matter....467
I.5.3 General information chapter **<gim>** 467
I.5.3.1 General information work package **<ginfowp>** 467
I.5.3.2 BDAR unique general information work package **<bdar-geninfowp>**....467
I.5.3.2.1 Work package identification information **<wpidinfo>**. 467
I.5.3.2.2 Initial setup **<initial_setup>**....467
I.5.3.2.3 BDAR fixes statement 467
I.5.3.2.4 Standards and practices **<bdar-std-practices>**....467
I.5.3.2.5 Tasks and responsibilities **<bdar-task-resp>**....468
I.5.3.2.5.1 Tagging/identifying BDAR repairs....468
I.5.3.2.5.2 Reports 468
I.5.3.2.6 Combat Threats **<bdar-combat-threat>** (Aviation Only). 468
I.5.4 Battle damage assessment chapter **<baim>**....468
I.5.4.1 Battle damage assessment work package(s) **<damage-assesswp>**. 468
I.5.4.1.1 Work package identification information **<wpidinfo>**. 469
I.5.4.1.2 Work package initial setup **<initial_setup>**....469
I.5.4.1.3 BDAR fixes statement 469
I.5.4.1.4 Introduction **<intro>** 469
I.5.4.1.5 Fault assessment tables 469
I.5.5 Battle damage repair chapter **<brim>** 469
I.5.5.1 Battle damage repair work packages **<genrepairwp>**. 469
I.5.5.1.1 Work package identification information **<wpidinfo>**. 470
I.5.5.1.2 Initial setup information **<initial_setup>**....470
I.5.5.1.3 BDAR fixes statement 470
I.5.5.1.4 Introduction **<geninfo>** 470
I.5.5.1.4.1 Scope....470
I.5.5.1.4.2 Repair procedure index 470
I.5.5.1.5 Repair procedure **<bdar-repair-proc>**....470
I.5.5.1.5.1 General 470
I.5.5.1.5.2 Item name, trouble. 470
I.5.5.1.5.2.1 Limitations **<bdar-limitation>** 470
I.5.5.1.5.2.2 Personnel/time required **<bdar-persn>** 470
I.5.5.1.5.2.3 Materials/tools **<bdar-mtrl-tools>**....471
I.5.5.1.5.2.4 Procedural steps **<proc>**....471

Source: https://assist.dla.mil -- Downloaded: 2016-12-09T23:24Z
Check the source to verify that this is the current version before use.

TABLE OF CONTENTS

PARAGRAPH PAGE

I.5.5.1.5.3 Options 471
I.5.5.1.5.4 Item name, category 471
I.5.6 Supporting information chapter **<sim>** 471
I.5.6.1 References work package **<refwp>** 471
I.5.6.2 Special or fabricated tools work package **<bdartoolswp>**. 471
I.5.6.2.1 Work package identification information **<wpidinfo>**. 471
I.5.6.2.2 Initial setup information **<initial_setup>** 471
I.5.6.2.3 BDAR fixes statement. 471
I.5.6.2.4 Content and format. 471
I.5.6.3 Expendable and durable items work package **<explistwp>**. 472
I.5.6.4 Substitute materials/parts work package **<substitute-matwp>**. 472
I.5.6.4.1 Work package identification information **<wpidinfo>**. 472
I.5.6.4.2 Initial setup information **<initial_setup>** 472
I.5.6.4.3 BDAR fixes statement 472
I.5.6.4.4 Content 472

I.6 NOTES 472

J PREVENTIVE MAINTENANCE CHECKLIST (PMC) 479

J.1 SCOPE 479
J.1.1 Scope. 479

J.2 APPLICABLE DOCUMENTS 479

J.3 DEFINITIONS 479

J.4 GENERAL REQUIREMENTS 479
J.4.1 General. 479
J.4.2 Development of a Preventive Maintenance Checklist (PMC) 479
J.4.3 Preparation of digital data for electronic delivery 479
J.4.4 Use of Document Type Definition (DTD)/style sheet 479
J.4.5 Content structure 479
J.4.6 Style and format 479
J.4.7 Preventive Maintenance Checklist (PMC) numbering. 480
J.4.8 National Stock Numbers (NSNs) and Part Numbers (P/Ns) 480
J.4.9 Illustrations 480
J.4.10 Selective application and tailoring of contents using Appendix A matrixes 480

J.5 DETAILED REQUIREMENTS 480
J.5.1 Basic content. 480
J.5.2 Front matter 480
J.5.2.1 Front cover **<frntcover-abbreviated>** 480

Source: https://assist.dla.mil -- Downloaded: 2016-12-09T23:24Z
Check the source to verify that this is the current version before use.

TABLE OF CONTENTS

PARAGRAPH PAGE

J.5.2.1.1 Usage note and reporting errors and recommending improvements statement **<reporting>** 480
J.5.2.2 Warning summary **<warnsum>** 480
J.5.3 PMCS introduction work package **<pmcsintrowp>** 481
J.5.4 PMCS work packages **<pmcswp>** 481
J.5.5 Rear matter **<rear>** 481

J.6 NOTES 481
J.6.1 Acquisition requirements 481

K LUBRICATION ORDERS 483

K.1 SCOPE 483
K.1.1 Scope. 483

K.2 APPLICABLE DOCUMENTS 483

K.3 DEFINITIONS 483

K.4 GENERAL REQUIREMENTS 483
K.4.1 General 483
K.4.2 Development of lubrication instructions. 483
K.4.3 Preparation of digital data for electronic delivery 483
K.4.4 Use of Document Type Definition (DTD)/style sheet 483
K.4.5 Content structure 484
K.4.6 Style and format 484
K.4.7 Work package development 484
K.4.8 Warnings, cautions, and notes 484
K.4.9 Illustrations 484
K.4.9.1 Single illustrations 484
K.4.9.2 Multiple illustrations. 484
K.4.10 Safety devices and interlocks 484
K.4.11 Electrostatic Discharge (ESD) sensitive parts 484
K.4.12 Selective application and tailoring of contents using Appendix A matrixes. 484

K.5 DETAILED REQUIREMENTS 484
K.5.1 Lubrication Order (LO) **<lubeorder>** 484
K.5.1.1 General requirements 484
K.5.1.1.1 LO format 484
K.5.1.1.2 LO number. 485
K.5.1.1.3 Lubrication interval symbols 485
K.5.1.1.4 Measurements 485
K.5.2 LO front matter 485

Source: https://assist.dla.mil -- Downloaded: 2016-12-09T23:24Z
Check the source to verify that this is the current version before use.

TABLE OF CONTENTS

PARAGRAPH PAGE

K.5.2.1 Cover **<frntcover_abbreviated>** 485
K.5.2.1.1 Heading 485
K.5.2.1.2 Title **<tmtitle>** 485
K.5.2.1.3 National Stock Number (NSN), part number, Commercial and Government Entity Code (CAGEC), and End Item Code (EIC) 485
K.5.2.1.4 Reference line **<lube-refs>** 485
K.5.2.1.5 Reporting errors **<reporting>**. 486
K.5.2.1.6 Supersedure notice **<supersedure>** 486
K.5.2.1.7 Distribution statement, export control warning, and destruction notice **<notices>** 486
K.5.2.1.8 Lubrication order (LO) statement **<general_purpose_notices>** 486
K.5.2.1.9 Service nomenclature **<servnomen>** 486
K.5.2.1.10 LO date **<date>** 486
K.5.3 LO introduction work package **<lointrowp>** 486
K.5.3.1 Work package identification information **<wpidinfo>** 486
K.5.3.2 Work package initial setup **<initial_setup>** 486
K.5.3.3 LO introduction contents 486
K.5.3.3.1 General statement(s)/notes 486
K.5.3.3.1.1 General note placement 486
K.5.3.3.1.2 General note content 486
K.5.3.3.2 Oil filter statement 486
K.5.3.3.3 Army Oil Analysis Program (AOAP) statements. 487
K.5.3.3.3.1 Army Oil Analysis Program (AOAP) sampling interval statement 487
K.5.3.3.3.2 Army Oil Analysis Program (AOAP) not available/non-enrolled statement. 487
K.5.3.3.4 Warranty hardtime statement. 487
K.5.4 Lubrication procedures work package **<lubewp>** 487
K.5.4.1 Work package identification information **<wpidinfo>**. 487
K.5.4.2 Work package initial setup **<initial_setup>** 487
K.5.4.3 Grouped lubrication points 487
K.5.4.4 Washing and natural drying. 488
K.5.4.5 Preservation information. 488
K.5.5 LO supporting information **<sim>** 488
K.5.5.1 Lubricants and military symbols work package **<lubricantsymbolswp>** 488
K.5.5.1.1 Work package identification information **<wpidinfo>**. 488
K.5.5.1.2 Work package initial setup **<initial_setup>** 488
K.5.5.1.3 Lubricants and military symbols 488
K.5.5.2 Lubricant types work package **<lubetypeswp>** 489
K.5.5.2.1 Work package identification information **<wpidinfo>**. 489
K.5.5.2.2 Work package initial setup **<initial_setup>** 489

Source: https://assist.dla.mil -- Downloaded: 2016-12-09T23:24Z
Check the source to verify that this is the current version before use.

TABLE OF CONTENTS

PARAGRAPH PAGE

K.5.5.2.3 Lubricant table. 489
K.5.5.2.3.1 Notes to tables. 489
K.5.5.3 Special notes work package **<lospecnoteswp>** 489
K.5.5.3.1 Work package identification information **<wpidinfo>**. 489
K.5.5.3.2 Work package initial setup **<initial_setup>** 489
K.5.5.3.3 Special notes 489
K.5.5.3.3.1 Pertinent lubrication point information 489
K.5.5.3.3.2 Effect of extreme conditions. 489
K.5.6 Lubrication order rear matter **<lubeorder_rear>** 489
K.5.6.1 Reporting errors and recommending improvements DA Form 2028 **<da2028>**. 489
K.5.6.2 Authentication block **<authent>**. 489
K.5.6.3 Back cover **<back>** 490

K.6 NOTES 490

L MAINTENANCE OR DEMILITARIZATION OF AMMUNITION PROCEDURES 495

L.1 SCOPE 495
L.1.1 Scope 495

L.2 APPLICABLE DOCUMENTS 495

L.3 DEFINITIONS 495

L.4 GENERAL REQUIREMENTS 495
L.4.1 General 495
L.4.2 Development of maintenance or demilitarization instructions 495
L.4.3 Preparation of digital data for electronic delivery 495
L.4.4 Use of Document Type Definition (DTD)/style sheet 495
L.4.5 Content structure and format 495
L.4.6 Style and format 495
L.4.7 Work package development 496
L.4.8 Electrostatic discharge (ESD) sensitive parts. 496
L.4.9 Selective application and tailoring of contents using Appendix A matrixes 496

L.5 DETAILED REQUIREMENTS 496
L.5.1 General 496
L.5.2 Preparation of maintenance or demilitarization DMWRs. 496
L.5.3 Chapter 1 - General Information and DMWR introduction **<gim>** 497
L.5.3.1 General Information work package **<ginfowp>** 497
L.5.3.2 DMWR introduction work package **<dmwr_introwp>** 497

Source: https://assist.dla.mil -- Downloaded: 2016-12-09T23:24Z
Check the source to verify that this is the current version before use.

TABLE OF CONTENTS

PARAGRAPH PAGE

L.5.3.2.1 Work package identification information **<wpidinfo>**. 497
L.5.3.2.2 Work package initial setup **<initial_setup>**....497
L.5.3.2.3 Work planning **<work_planning>**. 497
L.5.3.2.4 Disposition **<disposition>**....497
L.5.3.2.5 Equipment **<equipment>**....497
L.5.3.2.6 Safety requirements **<sfty_req>**. 497
L.5.3.2.7 Protection against general hazards **<gen_hazards>**....498
L.5.3.2.8 Protection against specific hazards **<spec_hazards>** 498
L.5.3.2.9 Hazard analysis **<haz_analysis>** 498
L.5.3.2.10 Environmental regulation compliance **<erc>** 498
L.5.3.2.11 Resource conservation and recovery regulations **<rcrr>** 498
L.5.3.2.12 Resource recovery **<resource_recovery>**. 498
L.5.3.2.13 Reporting requirements **<reporting_req>**....498
L.5.3.2.14 Tabulated data **<tabdata>** 498
L.5.3.2.15 Flowchart **<flowchart>**....498
L.5.4 Chapter X - Operational Requirements **<opim>** 498
L.5.4.1 Operational requirements work package **<dmwr_operationalreqwp>**. 498
L.5.4.1.1 Work package identification information **<wpidinfo>**. 499
L.5.4.1.2 Work package initial setup **<initial_setup>**....499
L.5.4.1.3 Special safety requirements **<spec_sfty_req>**. 499
L.5.4.1.4 Operational steps **<op_steps>**....499
L.5.4.1.5 Flowchart **<flowchart>**....499
L.5.5 Chapter X - Quality Acceptance Requirements....499
L.5.5.1 Quality acceptance requirements work package **<dmwr_qarwp>**. 499
L.5.5.1.1 Work package identification information **<wpidinfo>**. 499
L.5.5.1.2 Work package initial setup **<initial_setup>**....499
L.5.5.1.3 Demilitarized ammunition **<demil_qar>**....499
L.5.5.1.4 Maintenance of ammunition **<maintenance_qar>** 499
L.5.5.1.5 Definitions **<definitions>** 499
L.5.6 Chapter X - Supporting information **<dmwr_sim>**. 499
L.5.6.1 References work package **<refwp>**....500
L.5.6.2 Expendable and durable items list work package **<explistwp>**....500
L.5.6.3 Equipment and special facilities work package **<genwp>** 500
L.5.6.4 Tabulated data, military specifications, and drawings work package **<genwp>**....500
L.5.6.5 Approved intraplant transfer equipment work package **<genwp>** 500
L.5.6.6 Pentachlorophenol (PENTA)-treated packing materials work package **<genwp>**....500
L.5.6.7 Environmental requirements work package **<genwp>**....500

Source: https://assist.dla.mil -- Downloaded: 2016-12-09T23:24Z
Check the source to verify that this is the current version before use.

TABLE OF CONTENTS

PARAGRAPH PAGE

L.5.6.8 Hazard analysis work package **<genwp>**. 500
L.5.6.9 Other supporting information work packages **<genwp>** 500

L.6 NOTES 500

M SOFTWARE USERS MANUALS (SUM) AND SOFTWARE ADMINISTRATOR MANUALS (SAM) 507

M.1 SCOPE 507
M.1.1 Scope. 507

M.2 APPLICABLE DOCUMENTS 507

M.3 DEFINITIONS 507

M.4 GENERAL REQUIREMENTS 507
M.4.1 Maintenance level/class applicability 507
M.4.2 Preparation of digital data for electronic delivery 507
M.4.3 Use of Document Type Definition (DTD) 508
M.4.4 Content structure 508
M.4.5 Style and format 508
M.4.6 Work package development. 508
M.4.7 Selective application and tailoring of content using Appendix A matrixes 508

M.5 DETAILED REQUIREMENTS 508
M.5.1 Content and format 508
M.5.1.1 Hardware related procedures 508
M.5.1.2 SUMs/SAMs in combination with other manuals 509
M.5.1.3 Updates to SUMs/SAMs 509
M.5.1.4 Numbering SUMs/SAMs 509
M.5.2 Front and rear matter 509
M.5.3 Software general information chapter **<gim>** 509
M.5.3.1 Software general information work package **<sginfowp>**. 509
M.5.3.1.1 Work package identification information **<wpidinfo>** 509
M.5.3.1.2 Work package initial setup **<initial_setup>** 509
M.5.3.1.3 Scope **<scope>** 509
M.5.3.1.4 Maintenance forms, records, and reports **<mfrr>** (Required) 509
M.5.3.1.5 Software improvement recommendations **<eir>(**Required). 509
M.5.3.1.6 Systems overview **<softsysover>** (Required) 510
M.5.3.1.7 Document overview **<softdocover>** (Required) 510
M.5.3.1.8 Warranty information **<wrntyref>** 510
M.5.3.1.9 Destruction of Army software to prevent enemy use **<destructmat>** 510
M.5.3.1.10 Nomenclature cross reference list **<nomenreflist>** 510

Source: https://assist.dla.mil -- Downloaded: 2016-12-09T23:24Z
Check the source to verify that this is the current version before use.

TABLE OF CONTENTS

PARAGRAPH PAGE

M.5.3.1.11 List of abbreviations/acronyms **<loa>** (Required) 510
M.5.3.2 Software summary work package **<softsumwp>** 510
M.5.3.2.1 Work package identification information **<wpidinfo>** 510
M.5.3.2.2 Work package initial setup **<initial_setup>**.....510
M.5.3.2.3 Software application **<soft_app>** 510
M.5.3.2.4 Software inventory **<soft_inventory>** 510
M.5.3.2.5 Software environment **<soft-environment>**.....510
M.5.3.2.6 Security and privacy **<soft_secpriv>**.....510
M.5.3.2.7 Supervisory controls **<soft_superctrls>** 511
M.5.3.2.8 Assistance and problem reporting **<soft_assistreport>**. 511
M.5.3.3 Software effectivity work package **<softeffectwp>** (**Revisions only**) 511
M.5.3.3.1 Work package identification information **<wpidinfo>** 511
M.5.3.3.2 Work package initial setup **<initial_setup>**.....511
M.5.3.3.3 Software effectivity information **<geninfo>** 511
M.5.3.4 Differences between software versions work package **<softdiffversionwp>**.....511
M.5.3.4.1 Work package identification information **<wpidinfo>** 511
M.5.3.4.2 Work package initial setup **<initial_setup>**.....511
M.5.3.4.3 Differences between software versions information **<eqpdiff>** 511
M.5.4 Software description and data chapter **<softdescdata>** 511
M.5.4.1 Features and capabilities work package **<softfeaturescapwp>** (**Required**).....511
M.5.4.1.1 Work package identification information **<wpidinfo>** 511
M.5.4.1.2 Work package initial setup **<initial_setup>**.....512
M.5.4.1.3 Capabilities and features **<proc>**.....512
M.5.4.2 Screen displays work package **<softscreendisplaywp>** (**Required**) 512
M.5.4.2.1 Work package identification information **<wpidinfo>** 512
M.5.4.2.2 Work package initial setup **<initial_setup>**.....512
M.5.4.2.3 Screen displays 512
M.5.4.3 Menus and directories work package **<softmenuwp>**.....512
M.5.4.3.1 Work package identification information **<wpidinfo>** 512
M.5.4.3.2 Work package initial setup **<initial_setup>**.....512
M.5.4.3.3 Menus and directories **<proc>**.....512
M.5.4.4 Tools and buttons work package **<softtoolswp>** (**Required**) 512
M.5.4.4.1 Work package identification information **<wpidinfo>** 512
M.5.4.4.2 Work package initial setup **<initial_setup>**.....512
M.5.4.4.3 Tools and buttons.....512
M.5.5 Software operator instructions chapter **<sopim>**.....512
M.5.5.1 Security and privacy procedures work package **<softsecprovwp>** (**Required**).....513

Source: https://assist.dla.mil -- Downloaded: 2016-12-09T23:24Z
Check the source to verify that this is the current version before use.

TABLE OF CONTENTS

PARAGRAPH PAGE

M.5.5.1.1 Work package identification information **<wpidinfo>** 513
M.5.5.1.2 Work package initial setup **<initial_setup>**.....513
M.5.5.1.3 Security and privacy procedures **<proc>** 513
M.5.5.2 Supervisory controls work package **<softsuperctrlswp>** (Required for SAM only) 513
M.5.5.2.1 Work package identification information **<wpidinfo>** 513
M.5.5.2.2 Work package initial setup **<initial_setup>**.....513
M.5.5.2.3 Supervisory controls **<proc>**.....513
M.5.5.3 Powerup/startup and powerdown/shutdown procedures work package **<softpowerupwp>** (Required).....513
M.5.5.3.1 Work package identification information **<wpidinfo>** 513
M.5.5.3.2 Work package initial setup **<initial_setup>**.....513
M.5.5.3.3 Powerup/startup procedures **<proc>** 514
M.5.5.3.4 Powerdown/shutdown procedures **<proc>**.....514
M.5.5.4 Accessing/exiting software work package **<softaccesswp>** (**Required**).....514
M.5.5.4.1 Work package identification information **<wpidinfo>** 514
M.5.5.4.2 Work package initial setup **<initial_setup>**.....514
M.5.5.4.3 Accessing/exiting software procedures **<proc>** 514
M.5.5.5 Key commands work package **<softkeycmdswp>** 514
M.5.5.5.1 Work package identification information **<wpidinfo>** 514
M.5.5.5.2 Work package initial setup **<initial_setup>**.....514
M.5.5.5.3 Key commands.....514
M.5.5.6 Processes and commands work package **<softproccmdwp>**.....514
M.5.5.6.1 Work package identification information **<wpidinfo>** 514
M.5.5.6.2 Work package initial setup **<initial_setup>**.....514
M.5.5.6.3 Processes and commands **<proc>** 514
M.5.5.7 User interface work package **<softguiwp>** 514
M.5.5.7.1 Work package identification information **<wpidinfo>** 514
M.5.5.7.2 Work package initial setup **<initial_setup>**.....514
M.5.5.7.3 User interface procedures 515
M.5.5.8 Software operating conventions work package **<softopconventionswp>** 515
M.5.5.8.1 Work package identification information **<wpidinfo>** 515
M.5.5.8.2 Work package initial setup **<initial_setup>**.....515
M.5.5.8.3 Software operating conventions **<proc>** 515
M.5.5.9 Additional software operation work package **<softgenwp>**.....515
M.5.6 Software troubleshooting chapter **<tim> (Required)** 515
M.5.6.1 Introduction work package **<tsintrowp>**.....515
M.5.6.2 Troubleshooting index work package **<tsindexwp>** (Required for SAM only) 515

Source: https://assist.dla.mil -- Downloaded: 2016-12-09T23:24Z
Check the source to verify that this is the current version before use.

TABLE OF CONTENTS

PARAGRAPH PAGE

M.5.6.3 Messages work package **<softmessageswp>** (Required for SAM only) 515
M.5.6.3.1 Work package identification information **<wpidinfo>** 515
M.5.6.3.2 Work package initial setup **<initial_setup>** 515
M.5.6.3.3 Messages **<message>** 516
M.5.6.4 Recovery from errors, malfunctions, and emergencies work package **<softerrorswp>** 516
M.5.6.4.1 Work package identification information **<wpidinfo>** 516
M.5.6.4.2 Work package initial setup **<initial_setup>** 516
M.5.6.4.3 Recovery from errors, malfunctions, and emergencies 516
M.5.6.5 Troubleshooting work package **<tswp>** 516
M.5.7 Software maintenance chapter **<mim>** (Required for SAM only) 516
M.5.8 Supporting information chapter **<sim>** (Required) 516
M.5.8.1 References work package **<refwp>** (Required) 516
M.5.8.2 Software basic issue items (BII) work package **<softbiiwp>** (**Required**) 516
M.5.8.2.1 Work package identification information **<wpidinfo>** 516
M.5.8.2.2 Work package initial setup **<initial_setup>** 517
M.5.8.2.3 BII list **<softbii>** 517
M.5.8.3 Additional authorization list work package **<aalwp>** 517
M.5.8.4 Expendable and durable items work package **<explistwp>** 517
M.5.8.5 Additional supporting information work package **<genwp>** 517
M.5.9 Rear matter 517

M.6 NOTES 517

N GENERAL MAINTENANCE MANUALS 519

N.1 SCOPE 519
N.1.1 Scope. 519

N.2 APPLICABLE DOCUMENTS 519

N.3 DEFINITIONS 519

N.4 GENERAL REQUIREMENTS 519
N.4.1 Maintenance level/class applicability 519
N.4.2 Preparation of digital data for electronic delivery 519
N.4.3 Use of Document Type Definition (DTD)/stylesheet 519
N.4.4 Content structure 519
N.4.5 Style and format 519
N.4.6 Work package development 520

Source: https://assist.dla.mil -- Downloaded: 2016-12-09T23:24Z
Check the source to verify that this is the current version before use.

TABLE OF CONTENTS

PARAGRAPH PAGE

N.4.7 Selective application and tailoring of content using Appendix A matrixes...520

N.5 DETAILED REQUIREMENTS.....520
N.5.1 Content and format.....520
N.5.2 Introductory and rear matter.....520
N.5.3 General information chapter **<gim>**.....520
N.5.3.1 General maintenance manual general information work package **<gmgeninfo>**.....520
N.5.3.1.1 Work package identification information **<wpidinfo>**.....520
N.5.3.1.2 Work package initial setup **<initial_setup>**.....520
N.5.3.1.3 Scope **<scope>** (**Required**).....520
N.5.3.1.4 Maintenance forms, records, and reports **<mfrr>** (**Required**).....520
N.5.3.1.5 Equipment improvement recommendations **<eir>(Required**).....520
N.5.3.1.6 Policy **<policy>**.....520
N.5.3.1.7 Safety **<safety>**.....521
N.5.3.1.8 Warranty information **<wrntyref>**.....521
N.5.3.1.9 Nomenclature cross/reference list **<nomenreflist>**.....521
N.5.3.1.10 List of abbreviations/acronyms **<loa>** (Required).....521
N.5.3.2 Equipment description and data work package **<descwp>**.....521
N.5.4 Maintenance chapter **<mim>**.....521
N.5.5 Supporting information chapter **<sim>** (Required).....521
N.5.5.1 References work package **<refwp>** (Required).....521
N.5.5.2 Expendable and durable items work package **<explistwp>**.....521
N.5.5.3 Additional supporting information work package **<genwp>**.....521
N.5.6 Rear matter.....521

N.6 NOTES.....521

Source: https://assist.dla.mil -- Downloaded: 2016-12-09T23:24Z
Check the source to verify that this is the current version before use.

TABLE OF FIGURES

FIGURE PAGE

FIGURE 1. Example of a maintenance work package with one task 77
FIGURE 2. Example of a maintenance work package with multiple tasks 78
FIGURE 3. Example of a chapter title page....80
FIGURE 4. Example of work package identification information 81
FIGURE 5. Example of a foldout page 82
FIGURE 6. Example of emergency page markings 83
FIGURE 7. Example of a TM front cover....84
FIGURE 8. Example of a phased maintenance TM front cover 87
FIGURE 9. Example of a DMWR front cover....88
FIGURE 10. Example of a DMWR cover with national overhaul standards 89
FIGURE 11. Example of a NMWR cover with national overhaul standards 90
FIGURE 12. Example of front cover for TM with national overhaul standards....91
FIGURE 13. (MC) Cover for Marine Corp only TM....92
FIGURE 14. (MC) Sample promulgation letter for new TM....94
FIGURE 15. (MC) Sample promulgation letter for changed TM with inserted pages only....95
FIGURE 16. (MC) Sample promulgation letter for changed TM with inserted pages and replacement pages....96
FIGURE 17. (MC) Sample promulgation letter for multi-volume TM with changes 97
FIGURE 18. (MC) Sample promulgation letter for joint service TM involving Marine Corps....98
FIGURE 19. (MC) Sample promulgation letter for revised TM....99
FIGURE 20. Example of change transmittal page 100
FIGURE 21. Example of a list of effective pages for a new publication....101
FIGURE 22. Example of a list of effective pages for a manual with changes....102
FIGURE 23. Example of a list of effective pages for a revised manual. 103
FIGURE 24. Example of a list of effective pages for a multi-volume manual....104
FIGURE 25. Example of a title page 105
FIGURE 26. Example of a title page for a RPSTL TM 107
FIGURE 27. Example of a title page for a narrative TM with a RPSTL 108
FIGURE 28. Example of a title page with warning data for phased maintenance inspection and preventive maintenance services....109
FIGURE 29. Example of a table of contents with figures and tables listed....110
FIGURE 30. Example of a table of contents without figures and tables listed....111
FIGURE 31. Example of a RPSTL table of contents. 112
FIGURE 32. Example of an alphabetical index. 113
FIGURE 33. Example of an authentication block for the Army 114
FIGURE 34. Example of an authentication block for Joint Services....115
FIGURE B-1. Example of a station diagram 243
FIGURE C-1. Example of controls and indicators 254
FIGURE D-1. Example of a cover sheet for preshop analysis checklist 273
FIGURE D-2. Example of a of a table of tests and inspections for a preshop analysis 274
FIGURE D-3. Example of a component checklist....275
FIGURE D-4. Example of content for an operational checkout procedure....276

Source: https://assist.dla.mil -- Downloaded: 2016-12-09T23:24Z
Check the source to verify that this is the current version before use.

TABLE OF FIGURES

FIGURE PAGE

FIGURE D-5. Example of content for a troubleshooting procedure (Method A) 279
FIGURE D-6. Example of content for a troubleshooting procedure (Method B) 281
FIGURE D-7. Example of content for a troubleshooting procedure (Method C) 283
FIGURE D-8. Example of content for a combination testing and troubleshooting procedure..284
FIGURE E-1. Example of packaging inspection/service upon receipt 335
FIGURE E-2. Example of a PMCS table. 337
FIGURE E-3. Example of tabular and narrative reliability, availability, and maintainability data. 338
FIGURE E-4. Example of classification of materiel defects.....339
FIGURE E-5. Example of an overhaul and retirement schedule.....340
FIGURE E-6. Example of a lubrication chart 341
FIGURE E-7. Example of an OIP table. 342
FIGURE E-8. Example of depot mobilization requirements. 343
FIGURE E-9. Example of an illustrated list of manufactured items.....344
FIGURE E-10. Example of torque limits data.....345
FIGURE E-11. Example of two-view chart diagram.....348
FIGURE E-12. Example of an area diagram for PMD.....349
FIGURE E-13. Example of an area diagram for PMS.....350
FIGURE E-14. Example of an inspection area diagram.....351
FIGURE E-15. Example of inspection access provisions. 352
FIGURE F-1. RPSTL page layout scenarios.....392
FIGURE F-2. Example of an introduction work package.....393
FIGURE F-3. Example of an indexed RPSTL illustration and legend. 394
FIGURE F-4. Example of a repair parts list work package 395
FIGURE F-5. Example of a multi-service RPSTL.....397
FIGURE F-6. Example of indentions (next higher assembly). 398
FIGURE F-7. Example of kits breakdown option 1.....399
FIGURE F-8. Example of kits breakdown option 2.....400
FIGURE F-9. Example of a bulk material list.....401
FIGURE F-10. Example of a special tools list work package.....402
FIGURE F-11. Example of a national stock number index work package.....403
FIGURE F-12. Example of a part number index work package.....404
FIGURE F-13. Example of a reference designator index work package.....405
FIGURE G-1. Example of references.....438
FIGURE G-2. Example of non-aviation MAC introduction.....439
FIGURE G-3. Example of aviation MAC introduction.....440
FIGURE G-4. Example of a non-aviation MAC. 441
FIGURE G-5. Example of joint service non-aviation MAC. 442
FIGURE G-6. Example of an aviation MAC.....443
FIGURE G-7. Example of non-aviation MAC tools and test equipment and remarks tables. ..444
FIGURE G-8. Example of aviation two-level MAC tools and test equipment and remarks tables.....445
FIGURE G-9. (A) Example of an introduction for COEI and BII lists.....446

Source: https://assist.dla.mil -- Downloaded: 2016-12-09T23:24Z
Check the source to verify that this is the current version before use.

TABLE OF FIGURES

FIGURE PAGE

FIGURE G-10. (A) Example of COEI list, single table (Method A).....447
FIGURE G-11 (A) Example of COEI list, multiple tables (Method A).....448
FIGURE G-12. (A) Example of COEI list (Method B). 450
FIGURE G-13. (A) Example of BII list (Method A). 451
FIGURE G-14. (A) Example of BII list (Method B). 452
FIGURE G-15. (A) Example of an AAL. 453
FIGURE G-16. Example of expendable and durable items list. 454
FIGURE G-17. Example of a tool identification list.....455
FIGURE G-18. Example of a mandatory replacement parts list.....456
FIGURE G-19. Example of a mandatory replacement parts list opt out.....457
FIGURE G-20. Example of a critical safety items parts table. 458
FIGURE I-1. Example of BDAR-general information work package.....473
FIGURE I-2. Example of BDAR assessment flowchart diagram.....474
FIGURE I-3. Example of BDAR assessment table. 475
FIGURE I-4. Example of substitute materials/parts. 476
FIGURE I-5. Example of substitute lubricants and hydraulic fluids.....477
FIGURE I-6. Example of substitute fuels.....478
FIGURE J-1. Example PMC cover page. 482
FIGURE K-1. Example of LO cover.....491
FIGURE K-2. Example of general statements/notes.....492
FIGURE K-3. Example of identification of lubricant symbol and lubrication points, interval, and note.....493
FIGURE K-4. Example of lubricant table.....494
FIGURE L-1. Example of operational requirements work package.....501
FIGURE L-2. Example of equipment and special facilities work package. 503
FIGURE L-3. Example of tabulated data, military specifications, and drawings.....504

Source: https://assist.dla.mil -- Downloaded: 2016-12-09T23:24Z
Check the source to verify that this is the current version before use.

TABLE OF FIGURES

FIGURE PAGE

This page intentionally left blank.

Source: https://assist.dla.mil -- Downloaded: 2016-12-09T23:24Z
Check the source to verify that this is the current version before use.

TABLE OF FIGURES

FIGURE PAGE

TABLE I. Manual styles and trim sizes 32
TABLE II. Foldout maximum page sizes (in inches) 32
TABLE III. Diagram specifications 54
TABLE A-I. Publication type and title with associated context matrix table 117
TABLE A-II. Operators and combined operator/maintenance requirements matrix for _____ 123
TABLE A-III. Below depot sustainment requirements matrix for _____.....133
TABLE A-IV. Combined maintenance and maintenance with parts requirements matrix for_____ 141
TABLE A-V. Aviation maintenance and maintenance with parts requirements matrix for aviation_____ 149
TABLE A-VI. Stand-alone RPSTL requirements matrix for _____. 157
TABLE A-VII. DMWR/NMWR requirements matrix for_____ 159
TABLE A-VIII. DMWR with overhaul standards requirements matrix for_____ 167
TABLE A-IX. Aircraft troubleshooting requirements matrix for_____ 175
TABLE A-X. Aircraft PMS or PMD requirements matrix for_____ 177
TABLE A-XI. Aircraft phased maintenance requirements matrix for_____ ...179
TABLE A-XII. Ammunition requirements matrix for_____ 181
TABLE A-XIII. Ammunition below depot sustainment requirements matrix for_____ 189
TABLE A-XIV. Ammunition combined maintenance requirements matrix for_____ 195
TABLE A-XV. Stand-alone destruction of materiel manual requirements matrix for.....201
TABLE A-XVI. BDAR requirements matrix for_____.....203
TABLE A-XVII. Preventive maintenance checklists requirements matrix for_____.....205
TABLE A-XVIII. Lubrication orders requirements matrix for_____ 207
TABLE A-XIX. DMWR maintenance/demilitarization of ammuinition requirements matrix for_____ 209
TABLE A-XX Software manual for_____ 213
TABLE A-XXI General maintenance manual for_____.....217
TABLE K-I. Lubrication intervals.....485

Source: https://assist.dla.mil -- Downloaded: 2016-12-09T23:24Z
Check the source to verify that this is the current version before use.

TABLE OF FIGURES

FIGURE PAGE

This page intentionally left blank.

Source: https://assist.dla.mil -- Downloaded: 2016-12-09T23:24Z
Check the source to verify that this is the current version before use.

1. SCOPE.

1.1 Scope. This standard establishes the technical content, style, and format requirements for all technical manuals (TMs) for major weapon systems and their related systems, subsystems, equipment, assemblies, components, shop replaceable units (SRUs), and line replaceable units (LRUs). This standard provides requirements for operator and maintenance technical manuals, depot maintenance work requirements (DMWRs), national maintenance work requirements (NWMRs), preventive maintenance daily (PMD), preventive maintenance services (PMS), phased maintenance inspection (PMI), destruction of Army materiel to prevent enemy use manuals, battle damage assessment and repair (BDAR) manuals, preventive maintenance checklists (PMCs), lubrication orders (LOs), ammunition DMWRs, software manuals, and general maintenance manuals. The requirements are applicable for all maintenance levels/classes through overhaul (depot) including DMWRs and NMWRs. The requirements can be used to develop TMs in paper, page-based manuals. For purposes of this standard, electronic technical manual (ETM) is synonymous with page-based technical manual.

1.2 Paragraphs with limited applicability. This standard contains paragraphs and specific requirements that are not applicable to all services. Such paragraphs or requirements are prefixed to indicate the Services to which they pertain: (A) Army, (N) Navy, (MC) Marine Corps only manuals, and (F) Air Force. Portions not prefixed are applicable to all services. Paragraphs prefixed with MC pertain to manuals that are for the Marine Corps only and unless otherwise stated, do not apply to multi-service manuals involving the Marine Corps.

1.3 Use of the technical content. In addition to using the technical content requirements provided herein for the development of TMs, the technical information developed in accordance with this standard and MIL-STD-3008 can be used to provide the necessary input to other external systems that are designed to collect and report operations, maintenance, historical and parts requisition data required for efficient management and support of aviation and non-aviation weapon systems and their related systems, equipment, and components/modules.

1.4 Examples/figures. The figures used in this standard are examples only. The text of this standard takes precedence over the figures. The figures in this standard represent standard-compliant material. The figures may not represent all variations of standard-compliant material.

2. APPLICABLE DOCUMENTS.

2.1 General. The documents listed in this section are specified in sections 3, 4, and 5 of this standard. This section does not include documents cited in other sections of this multipart standard or recommended for additional information or as examples. While every effort has been made to ensure the completeness of this list, document users are cautioned that they must meet all specified requirements documents cited in sections 3, 4, and 5 of this standard, whether or not they are listed.

2.2 Government documents.

2.2.1 Specifications, standards, and handbooks. The following specifications, standards, and handbooks form a part of this document to the extent specified herein. Unless otherwise specified, the issues of these documents are those cited in the solicitation or contract.

Source: https://assist.dla.mil -- Downloaded: 2016-12-09T23:24Z
Check the source to verify that this is the current version before use.

SPECIFICATIONS

DEPARTMENT OF DEFENSE

MIL-PRF-2104	—	Lubricating Oil, Internal Combustion Engine, Combat Tactical Service
MIL-PRF-63049	—	Manuals, Technical: List of Applicable Publications (LOAP)

STANDARDS

DEPARTMENT OF DEFENSE

MIL-STD-882	—	System Safety
MIL-STD-1309	—	Definitions of Terms for Testing, Measurement, and Diagnostics
MIL-STD-3003	—	Vehicles, Wheeled: Preparation for Shipment and Storage
MIL-STD-1686	—	Electrostatic Discharge Control Program for Protection of Electrical and Electronic Parts, Assemblies and Equipment (Excluding Electrically Initiated Explosive Devices)
MIL-STD-3008	—	Interactive Electronic Technical Manual (IETM) Technical data Requirements to Support the Global Combat Support System - Army (GCSS-A)

HANDBOOKS

DEPARTMENT OF DEFENSE

MIL-HDBK-113	—	Guide for the Selection of Lubricants, Functional Fluids, Preservatives and Specialty Products for use in Ground Equipment Systems
MIL-HDBK-263	—	Electrostatic Discharge Control Handbook for Protection of Electrical and Electronic Parts, Assemblies and Equipment (Excluding Electrically Initiated Explosive Devices) (Metric)
MIL-HDBK-275	—	Guide for Selection of Lubricants, Fluids, and Compounds for Use in Flight Vehicles and Components
MIL-HDBK-1222	—	Guide to the General Style and Format of U.S. Army Work Package Technical Manuals

(Copies of these documents are available from the Document Automation and Production Service, Building 4/D, 700 Robbins Avenue, Philadelphia, PA 19111-5094 or online at http://assist.quicksearch.dla.mil/.)

H6	—	Federal Item Name Directory

(Copies of Handbook H6 are available on CD-ROM from the Commander, Defense Logistics Services Center, Battle Creek, MI 49017-3084 or H6 search can be done at http://www.dlis.dla.mil/h6/search.asp.)

Source: https://assist.dla.mil -- Downloaded: 2016-12-09T23:24Z
Check the source to verify that this is the current version before use.

2.2.2 Other Government documents and publications. The following other Government documents and publications form a part of this document to the extent specified herein. Unless specified otherwise, the issues are those cited in the solicitation or contract.

AR 25-30	—	The Army Publishing Program
AR 25-52	—	Authorized Abbreviations, Brevity Code, and Acronyms
AR 95-1	—	Flight Regulations
AR 385-10	—	The Army Safety Program
AR 700-82	—	Joint Regulation Governing the Use and Application of Uniform Source, Maintenance, and Recoverability Codes
AR 750-1	—	Army Materiel Maintenance Policy
AR 750-10	—	Army Modification Program
AR 750-59	—	Corrosion Prevention and Control for Army Materiel
DA PAM 25-30	—	Consolidated Index of Army Publications and Blank Forms
DA PAM 25-40	—	Army Publishing: Action Officers Guide
DA PAM 95-9	—	Management of Aviation Critical Safety Items
DA PAM 385-63	—	Range Safety
DA PAM 385-64	—	Ammunition and Explosives Safety Standards
DA PAM 738-751	—	Functional Users Manual for The Army Maintenance Management System-Aviation (TAMMS-A)
DA PAM 750-8	—	The Army Maintenance Management System (TAMMS) Users Manual

(Application for copies should be addressed to Commander, U. S. Army Publishing Directorate, Media Distribution Division, ATTN: JDHQSV-PAS, 1655 Woodson Road, St. Louis, MO 63114-6128 or online at http://www.apd.army.mil/.)

DODM 5200.01, Volume 1	—	Information Security Program: Overview, Classification, and Declassification
DODM 5200.01, Volume 2	—	Information Security Program: Marking of Classified Information
DODM 5200.01, Volume 3	—	Information Security Program: Protection of Classified Information
DODM 5200.01, Volume 4	—	Information Security Program: Controlled Unclassified Information (CUI)
DOD 5220.22-M	—	National Industrial Security Program Operating Manual
DODI 4140.01	—	DOD Supply Chain Materiel Management Policy
DODI 5230.24	—	Distribution Statements on Technical Documents

Source: https://assist.dla.mil -- Downloaded: 2016-12-09T23:24Z
Check the source to verify that this is the current version before use.

(Copies of DOD documents are available online at http://www.dtic.mil/whs/directives/.)

FM 4-25.11	—	First Aid
FM 4-30.31	—	Recovery and Battle Damage Assessment and Repair
Joint Pub 1-02	—	DOD Dictionary of Military and Associated Terms
SB 742-1	—	Inspection of Supplies and Equipment Ammunition Surveillance Procedures
TB 43-0118	—	Field Instructions for Painting and Preserving Communications-Electronics Equipment
TB 43-0213	—	Corrosion Prevention and Control (CPC) for Tactical Vehicles
TB 750-93-1	—	Functional Group Code, Combat, Tactical and Support Vehicles and Special Purpose Equipment
TC 3-04.7	—	Army Aviation Maintenance
TM 1-1500-204-23	—	Aviation Unit Maintenance (AVUM) and Aviation Intermediate Maintenance (AVIM) Manual for General Aircraft Maintenance (General Maintenance and Practices), Volumes 1-11
TM 1-1500-335-23	—	Nondestructive Inspection Methods, Basic Theory
TM 1-1500-344-23	—	Cleaning and Corrosion Control (4 volumes)
TM 4-33.31	—	Operations and Maintenance of Ordnance Materiel in Cold Weather
TM 43-0139	—	Painting Instructions for Army Materiel
TM 55-1500-342-23	—	Joint Service Technical Manual for Aircraft Weight and Balance
TM 55-1500-345-23	—	Painting and Marking of Army Aircraft

(Copies of these publications are available from the U. S. Army Publishing Directorate, Media Distribution Division, 1655 Woodson Road, St. Louis, MO 63114-6128. Copies of TMs and TBs may be obtained from ETMs online on the LOGSA Web site (https://www.logsa.army.mil/index.cfm. Copies of FM 4-25.11, TC 3-04.7, and TM 4-33.31 may be obtained from the TRADOC Web site (www.ADTDL.Army.mil).)

Public Law 91-956 — OSHA Act of 1970

(Copies of this document may be obtained at https://www.osha.gov)

EO 12196 — Occupational Safety and Health Programs for Federal Employees

EO 13423 — Strengthening Federal Environmental, Energy, and Transportation Management

Source: https://assist.dla.mil -- Downloaded: 2016-12-09T23:24Z
Check the source to verify that this is the current version before use.

EO 13526	—	Classified National Security Information

(Copies of these documents may be obtained at http://www.archives.gov/federal-register/codification/numeric.html.)

2.3 Non-Government publications. The following documents form a part of this document to the extent specified therein. Unless otherwise specified, the issues of these documents are those cited in the solicitation or contract.

INTERNATIONAL ORGANIZATION FOR STANDARDIZATION (ISO)

ISO 1219-1	—	Fluid Power Systems and Components - Graphic Symbols and Circuit Diagrams -- Part 1: Graphic Symbols for Conventional Use and Data Processing Systems
ISO 1219-2	—	Fluid Power Systems and Components - Graphic Symbols and Circuit Diagrams -- Part 2: Circuit Diagrams
ISO/IEC 8632 series	—	Information Technology -- Computer Graphics -- Metafile for the Storage and transfer of Picture description Information
ISO 9000 Series	—	Quality Management
ISO 10303 Series	—	Standard for the Exchange of Product Model Data (STEP)

(Copies of these documents can be obtained online at http://www.iso.org/iso/home.html. DOD users can obtain copies at https://www.us.army.mil/suite/page/468324.)

AMERICAN SOCIETY OF MECHANICAL ENGINEERS (ASME)

ASME Y14.38	—	Abbreviations and Acronyms for Use on Drawings and Related Documents
ASME Y14.100	—	Engineering Drawing Practices

(Application for copies should be addressed to the American Society of Mechanical Engineers, 2 Park Avenue, New York, NY 10016-5990 or online at http://www.asme.org/. DOD users can obtain copies at https://www.us.army.mil/suite/page/468324.)

AMERICAN SOCIETY FOR TESTING AND MATERIALS (ASTM)

ASTM-F856	—	Standard Practice for Mechanical Symbols, Shipboard—Heating, Ventilation, and Air Conditioning (HVAC)

(Applications for copies should be addressed to the American Society for Testing Material, 100 Barr Harbor Drive, West Conshohocken, PA 19428-2959 or online at http://www.astm.org/. DOD users can obtain copies at https://www.us.army.mil/suite/page/468324.)

Source: https://assist.dla.mil -- Downloaded: 2016-12-09T23:24Z
Check the source to verify that this is the current version before use.

INSTITUTE OF ELECTRICAL AND ELECTRONICS ENGINEERS (IEEE)

IEEE Std 91	—	IEEE Standard Graphic Symbols for Logic Functions
IEEE Std 260.1	—	IEEE Standard Letter Symbols for Units of Measurement (SI Units, Customary Inch-Pound Units, and Certain Other Units)
IEEE Std 280	—	IEEE Standard Letter Symbols for Quantities Used in Electrical Science and Electrical Engineering
IEEE Std 315a	—	Supplement to Graphic Symbols for Electrical and Electronics Diagrams
IEEE Std 945	—	IEEE Recommended Practice for Preferred Metric Units for Use in Electrical and Electronics Science and Technology

(Application for copies should be addressed to the Institute of Electrical and Electronics Engineers, Inc., 3 Park Avenue, 17th Floor, New York, NY 10016-5997 or online at http://www.ieee.org/. DOD users can obtain copies at https://www.us.army.mil/suite/page/468324.)

2.4 Order of precedence. In the event of a conflict between the text of this document and the references cited herein, the text of this document takes precedence. Nothing in this document, however, supersedes applicable laws and regulations unless a specific exemption has been obtained.

3. DEFINITIONS.

3.1 Acronyms used in this standard. The acronyms used in this standard are defined as follows:

2D	Two dimensional
3D	Three dimensional
AAL	Additional Authorization List
ABCA	American, British, Canadian, Australian
AFTO	Air Force Technical Order
AI	Adobe Illustrator
AMC	Aviation Maintenance Company
AMCOM	Aviation and Missile Command
AMDF	Army Master Data File
Ao	Operational Availability
AOAP	Army Oil Analysis Program
APD	Army Publishing Directorate
APE	Ammunition Peculiar Equipment
AR	Army Regulation

Source: https://assist.dla.mil -- Downloaded: 2016-12-09T23:24Z
Check the source to verify that this is the current version before use.

ASB	Aviation Support Battalion
ASC	Aviation Support Company
ASCC	Air Standardization Coordination Committee
ASME	American Society of Mechanical Engineers
ASSIST	Acquisition Streamlining and Standardization Information System
ASTM	American Society for Testing and Materials
ATE	Automatic Test Equipment
AVMAC	Aviation Maintenance Allocation Chart
BDAR	Battle Damage Assessment and Repair
BII	Basic Issue Items
BIT	Built-in Test
BITE	Built-in Test Equipment
BOI	Basis of Issue
BTR	Ballistic Test Requirement
CAD	Computer-Aided Design
CAGE	Commercial and Government Entity
CAGEC	Commercial and Government Entity Code
CARC	Chemical Agent Resistant Coating
CATT	Computer Automated Transportation Tool
CBM	Condition Based Maintenance
CBRNE	Chemical, Biological, Radiological, Nuclear, and Explosives
CD	Compact Disc
CDR	CorelDraw
CD-ROM	Compact Disc Read-Only Memory
CFR	Code of Federal Regulations
CGM	Computer Graphics Metafile
CIS	Communication and Information Systems
CL	Component List
CM	Collateral Material
CMX	Corel Exchange
COEI	Components of End Item
COMSEC	Communications Security
CONUS	Continental United States
CPC	Corrosion Prevention and Control
CSI	Critical Safety Item
CTA	Common Table of Allowance

Source: https://assist.dla.mil -- Downloaded: 2016-12-09T23:24Z
Check the source to verify that this is the current version before use.

CUI	Controlled Unclassified Information
DA	Department of the Army
DMWR	Depot Maintenance Work Requirement
DOD	Department of Defense
DODAC	Department of Defense Ammunition Code
DODI	Department of Defense Instruction
DODIC	Department of Defense Identification Code
DODM	Department of Defense Manual
DR	Deficiency Report
DSN	Defense Switching Network
DTD	Document Type Definition
DVD	Digital Versatile Disc
DXF	Autocad
ECM	Electronic Countermeasure
ECP	Engineering Change Proposal
e.g.	for example
EIC	End Item Code
EIR	Equipment Improvement Recommendation
EMP	Electromagnetic Pulse
EO	Executive Order
ESD	Electrostatic Discharge
EPS	Encapsulated PostScript
ETM	Electronic Technical Manual
FEDLOG	Federal Logistics Database
FGC	Functional Group Code
FM	Field Manual
FMC	Fully Mission Capable
FO	Foldout
FOUO	For Official Use Only
FP	Foldout page
FRC	Final Reproducible Copy
FSC	Federal Supply Classification
GB	Gigabyte
GIF	Graphic Interchange Format
GPO	Government Publishing Office
HAP	Hazardous Air Pollutant

Source: https://assist.dla.mil -- Downloaded: 2016-12-09T23:24Z
Check the source to verify that this is the current version before use.

HAZMAT	Hazardous materials
HCI	Hardness Critical Item
HCP	Hardness Critical Process
HBDK	Handbook
HR	Hand Receipt
HVAC	Heating, ventilation, and air conditioning
IAW	in accordance with
i.e.	in other words
IEC	International Electrotechnical Commission
IEEE	Institute of Electrical and Electronics Engineers
IETM	Interactive Electronic Technical Manual
IR	Infrared
IRRD	Issue Receipt Release Document
ISO	International Organization for Standardization
ISPM	International Standard for Phytosanitary Measures
IUID	Item Unique Identification
JDRS	Joint Deficiency Reporting System
JP	Joint Publication
JPEG	Joint Photographers Experts Group
JTA	Joint Table of Allowances
JTCI	Joint Technical Committee for Information Technology
LADS	Locally Approved Disposition Services
LCMC	Lifecycle Management Command
LIN	Line Item Number
LO	Lubrication Order
LOAP	List of Applicable Publications
LOEP	List of Effective Pages
LOGCOM	Logistics Communication
LOGSA	Logistics Support Activity
LPD	Logistics Product Data
LRU	Line Replaceable Unit
MAC	Maintenance Allocation Chart
MAP	Minor Alteration Procedure
MB	Megabyte
MC	Marine Corps
MEL	Maintenance Expenditure Limit

Source: https://assist.dla.mil -- Downloaded: 2016-12-09T23:24Z
Check the source to verify that this is the current version before use.

M/H	Man-hour
M&O	Maintenance and Overhaul
MOC	Maintenance Operational Checks
MOS	Military Occupational Specialty
MRP	Mandatory Replacement Part
MRPL	Mandatory Replacement Parts List
MSL	Military Shipping Label
MTBF	Mean Time Between Failures
MTF	Maintenance Test Flight
MTMC	Military Traffic Management Command
MTOE	Modified Table of Organization and Equipment
MTTR	Mean Time to Repair
MUX	Multiplex
MWO	Modification Work Order
NA	Not Available/Applicable
NATO	North Atlantic Treaty Organization
NAVAIR	Naval Air Systems Command
NAVSEA	Naval Sea Systems Command
NDI	Nondestructive Inspection
NEPR	Naval Environmental Production Research
NETR	Nationwide Environmental Title Research
NHA	Next Higher Assembly
NIIN	National Item Identification Number
NMCM	Not mission capable maintenance
NMCS	Not mission capable supply
NMWR	National Maintenance Work Requirement
NSA	National Security Agency
NSN	National Stock Number
OCONUS	Outside the continental United States
ODC	Ozone Depleting Chemicals
ODS	Ozone Depleting Substances
OIP	Overhaul Inspection Procedure
OJCS	Organization of the Joint Chiefs of Staff
OSD	Office of the Secretary of Defense
OSHA	Occupational Safety and Health Act
PAM	Pamphlet

Source: https://assist.dla.mil -- Downloaded: 2016-12-09T23:24Z
Check the source to verify that this is the current version before use.

PCB	Printed Circuit Board
PCN	Publications Control Number
PDF	Portable Document Format
PDREP	Product Data Reporting and Evaluation Program
PENTA	Pentachlorophenol
PID	Personal Identification
PIN	Publication Identification Number
PM	Phased Maintenance
PMAC	Preliminary Maintenance Allocation Chart
PMC	Preventive Maintenance Checklist
PMCS	Preventive Maintenance Checks and Services
PMD	Preventive Maintenance Daily
PMI	Phased Maintenance Inspection
PMS	Preventive Maintenance Services
P/N	Part Number
PNG	Portable network Graphics
POL	Petroleum, Oil, and Lubricant
PQDR	Product Quality Deficient Report
PRF	Performance
QA	Quality Assurance
QTY	Quantity
RAM	Reliability, Availability, Maintainability
RCM	Reliability Centered Maintenance
REFDES	Reference Designator
RGL	Reading Grade Level
RMDA	Records Management and Declassification Agency
RMS	Reliability, Maintainability, and Supportability
RPSTL	Repair Parts and Special Tools List
SB	Supply Bulletin
SAE	Society of Automotive Engineers
SAM	Software Administrators Manual
SC	Supply Catalog
SDDC	Surface Deployment and Distribution Command
SF	Standard Form
SKO	Sets, Kits, and Outfits
SMR	Source, Maintenance, and Recoverability

Source: https://assist.dla.mil -- Downloaded: 2016-12-09T23:24Z
Check the source to verify that this is the current version before use.

SPC	Statistical Process Control
SRA	Specialized Repair Activity
SRU	Shop Replaceable Unit
SSR	Supply System Responsibility
STANAG	Standardization Agreement
STD	Standard
STEP	Standard for Exchange of Product Model Data
SUM	Software Users Manual
SVG	Scalable Vector Graphic
TACOM	Tank-Automotive Command
TAMMS	The Army Maintenance Management System
TAMMS-A	The Army Maintenance Management System Aviation
TASMG	Theater Aviation Sustainment Maintenance Group
TB	Technical Bulletin
TBO	Time Between Overhaul
TC	Training Circular
TDA	Tables of Distribution and Allowances
TEA	Transportation Engineering Agency
TIFF	Tagged Image File Format
TM	Technical Manual
TMDE	Test, Measurement, and Diagnostic Equipment
TMSS	Technical Manual Specifications and Standards
TO	Technical Order
TOC	Table of Contents
TOE	Table of Organization and Equipment
TPS	Test Program Set
U/I	Unit of Issue
UOC	Usable On Code
URL	Uniform Resource Locator
U.S.	United States
USA	United States Army
USAF	United States Air Force
USAMC	United States Army Materiel Command
USBL EFF	Usable Effective
USMC	United States Marine Corps
USN	United States Navy

Source: https://assist.dla.mil -- Downloaded: 2016-12-09T23:24Z
Check the source to verify that this is the current version before use.

UURI	Using Unit Responsibility Items
UUT	Unit Under Test
W3C	World Wide Web Consortium
WMF	Windows MetaFile
WP	Work Package
WPM	Wood Packaging Materials
WTB	Warranty Technical Bulletin
WWW	World Wide Web
XML	Extensible Markup Language
XSL	Extensible Style sheet Language
XSL-FO	Extensible Style sheet Language – Formatting Object
XSLT	Extensible Style sheet Language Transformation

3.2 Abbreviation. A shortened or contracted form of a word or phrase, used to represent the whole word or phrase, e.g., U.S. for United States. Abbreviations may contain punctuation.

3.3 Acquiring activity. The DOD component, activity, or organization of a using military service, or that organization delegated by a using service, that is responsible for the selection and determination of requirements for Technical Manuals (TMs).

3.4 Acronym. A word formed from the initial letters or groups of letters of words in a set phrase or series of words such as PMCS for preventive maintenance checks and services. Acronyms contain no punctuation.

3.5 Additional Authorization List (AAL) items. Items are optional (discretionary), are not essential to operate the end item, and are not listed on engineering drawings. Items are not turned in with the end item.

3.6 Army Master Data File (AMDF). The files required to record, maintain, and distribute supply management data between and from Army commands to requiring activities.

3.7 Army Oil Analysis Program (AOAP). Effort to detect impending equipment component failure and determine lubricant condition through periodic analytical evaluation of oil samples.

3.8 Assembled item. An item has an "A" as the first letter of the source code in the SMR. This indicates the item is not stocked as an assembly but is assembled from its constituent repair parts.

3.9 Assembly. Two or more parts or subassemblies joined together to perform a specific function and capable of disassembly (e.g., brake assembly, fan assembly, audio frequency amplifier). Note that the distinction between an assembly and subassembly is determined by the individual application. An assembly in one instance may be a subassembly in another, where it forms a portion of an assembly.

3.10 Auxiliary equipment. Equipment, accessories, or devices which, when used with basic equipment, extend or increase its capability (e.g., modified table of organization and equipment (MTOE) items, etc.).

Source: https://assist.dla.mil -- Downloaded: 2016-12-09T23:24Z
Check the source to verify that this is the current version before use.

3.11 Basic Issue Items (BII). The minimum essential items not listed in the drawings, but required to place the equipment in operation, to operate it, and to perform emergency repairs. Although shipped separately packaged, BII must be with the equipment during operation and whenever they are transferred between property accounts. BII may be packed with communications security (COMSEC) equipment.

3.12 Basis of Issue (BOI). The quantity of an item (special tool) authorized for the end item density spread or for the unit level specified.

3.13 Block diagram. A modified schematic diagram in which each group of maintenance-significant components that together performs one or more functions is represented by a single symbol or block. The block or symbol representing the group of components shows simplified relevant input and output signals pertinent to the subject diagram.

3.14 Built-In Test (BIT). A test approach using built-in test equipment or other integral hardware designed into equipment or components under test to self-test and fault diagnose all and/or part of the equipment or component under test.

3.15 Built-In Test Equipment (BITE). Any identifiable device that is a part of the supported end item and is used for testing that supported end item.

3.16 Bulk material. Material issued in bulk for manufacture or fabrication of support items (e.g., sheet metal, pipe tubing, bar stock, or gasket material); excludes expendable items.

3.17 Callout. Anything placed on an illustration to aid in identifying the objects being illustrated, such as index numbers, nomenclature, leader lines, and arrows.

3.18 Chemical, Biological, Radiological, Nuclear, and Explosives (CBRNE). Reference to warfare involving the use of chemical, biological, nuclear, or explosive weapons or where any of these hazards are present. Also includes the decontamination procedures performed on equipment and/or personnel exposed to chemical, biological, radiological, and nuclear weapons. The term explosives was added to account for improvised devices.

3.19 Commercial and Government Entity Code (CAGEC). A five-character code assigned to commercial activities that manufacture or supply items used by the Federal Government and to Government activities that control design or are responsible for the development of certain specifications, standards, or drawings that control the design of Government items. CAGE codes can be found at http://www.dlis.dla.mil/cage_welcome.asp.

3.20 Compact Disc (CD). CDs are discs that are 4.75 in (12 cm) in diameter. CDs can hold approximately 700 MB of data or 80 minutes of audio. The data on a CD is stored as small notches on the disc and is read by a laser from an optical drive.

3.21 Complete repair. Maintenance capacity, capability, and authority to perform all the corrective maintenance tasks in order to restore serviceability to a failed item. Excludes the prescriptive maintenance tasks, overhaul, and rebuild.

3.22 Component. A constituent part not normally considered capable of independent operation; a piece part.

3.23 Components of End Item (COEI). Items identified on the engineering drawing tree that are physically separated and distinct from the end item.

Source: https://assist.dla.mil -- Downloaded: 2016-12-09T23:24Z
Check the source to verify that this is the current version before use.

3.24 Comprehensibility. The completeness with which a user in the target audience understands the information in the TM.

3.25 Computer Graphics Metafile (CGM). Computer Graphics Metafile (CGM) is defined in ISO/IEC 8632. CGM provides a means of graphics data interchange for computer representation of 2D graphical information independent from any particular application, system, platform, or device. CGM contains a metafile that describes the content and additional function as in the standard. Basically, CGM is a wrapper for the data and the data is explained in the metafile.

3.26 Condition Based Maintenance. Maintenance performed or an item replacement action performed based upon condition of the item as determined by an evaluation of each item on a scheduled basis.

3.27 Corrosion Prevention and Control (CPC). Systematic maintenance steps/procedures taken to prevent or retard the gradual destruction and/or pitting of a metal surface or other materials, such as rubber and plastic, due to exposure to corrosive elements.

3.28 Crew (operator) maintenance. Operator and/or crew maintenance is the first and most-critical operation of the Army Maintenance System. It is the cornerstone of Army maintenance and starts with the operator and/or crew performing PMCS using the applicable TM 10 series. The before- and during-PMCS concentrate on ensuring equipment is FMC. Maintenance operations normally assigned to operator and/or crew include the following:

a. Performance of PMCS.

b. Inspections by sight and touch of accessible components per the TM 10 series and condition based maintenance indicators or instrumentation.

c. Lubrication, cleaning (including corrective actions to repair corrosive damage), preserving (including spot painting), tightening, replacement, and minor adjustments authorized by the MAC.

d. Limited diagnosis and fault isolation as authorized by the MAC. This requires appropriate resources on-board the equipment or system to perform these tasks.

e. Replacement of combat spares (unserviceable parts, modules, and assemblies) as authorized by the MAC and carried on board the equipment or system.

3.29 Critical Safety Item (CSI). CSI is a part, assembly, installation or production system with one or more critical or critical safety characteristics that, if missing or not conforming to the design data, quality requirements or overhaul and maintenance documentation, would result in an unsafe condition that could cause loss or serious damage to the end item or major components, loss of control, uncommanded engine shutdown or serious injury or death to personnel. Unsafe conditions relate to hazard severity categories I and II of MIL-STD-882 and include items determined to be "life-limited," "fracture critical," "fatigue-sensitive," etc. The determining factor in CSI is the consequence of failure, not the probability that the failure or consequence would occur.

3.30 "Current as of" date. Indicates the date that all data in the RPSTL was verified as being current prior to forwading for printing.

3.31 Debug. Find and reduce the number of errors, flaws, faults, failures, or defects, in software.

3.32 Degradation. The reduction in system, subsystem, component performance capability.

Source: https://assist.dla.mil -- Downloaded: 2016-12-09T23:24Z
Check the source to verify that this is the current version before use.

3.33 Department of Defense (DOD). The Office of the Secretary of Defense (OSD) (including all boards and councils), the Military Departments (Army, Navy, and Air Force), the Organization of the Joint Chiefs of Staff (OJCS), the Unified and Specified Commands, the National Security Agency (NSA), and the Defense Agencies.

3.34 Department of Defense Ammunition Code (DODAC). An eight-character code developed to indicate interchangeability of ammunition and explosive items in federal supply classification (FSC) Group 13. This eight-character code is divided into two parts. The two parts are separated by a hyphen. The first four digits represent the FSC; the letter and last three numerals represent the DOD Identification Code that is assigned to items that are interchangeable in function and use. The eight-character DOD ammunition code is used for such ammunition operations as worldwide stock status reporting and requisitioning when specific items are not required.

3.35 Depot-level maintenance. Depot maintenance consists of material maintenance or repair requiring the overhaul, upgrading, or rebuilding of end items, parts, assemblies, or subassemblies and the testing and reclamation of equipment as necessary, regardless of source of funds for the maintenance or repair or the location at which the maintenance or repair is performed. This term is applicable for all maintenance and repair tasks for Class IX items designated or coded as depot (D or L) that are performed in field or other non-depot locations. Depot maintenance includes any software maintenance that is required to be performed by depot level maintainers.

3.36 Depot Maintenance Work Requirement (DMWR). A maintenance serviceability document for depot maintenance operations. The document prescribes the essential factors to ensure that an acceptable and cost-effective product is obtained.

3.37 Digital graphics form. A standard graphics form acceptable for graphics preparation under this standard. These forms include raster and vector formats. Raster formats include such formats as Joint Photographers Experts Group (JPEG), Tagged Image File Format (TIFF), Graphical Interchange Format (GIF), Portable Network Graphic (PNG), etc. Vector formats include Encapsulated Postscript (EPS), Adobe Illustrator (AI), Scalable Vector Graphics File (SVG), CorelDraw (CDR), Corel Exchange (CMX), Autocad (DXF), and Windows Metafile (WMF). Vector graphics are preferred.

3.38 Digital Versatile Disc (DVD). A DVD is a high-capacity optical disc that looks like a CD, but can store much more information. A single-layer, single-sided DVD can store approximately 4.7 GB of data. This enables larger data sets to be stored on a single DVD.

3.39 Disc. Removable and portable storage medium used to house data, music, movies, etc. Examples are CD or DVD.

3.40 Distribution medium. The method of distribution for a technical publication (e.g., paper, CD, DVD, etc.).

3.41 Document instance. The instance is the actual document text and its accompanying Extensible Markup Language (XML) tags conforming to the specifications and restrictions set forth in the Document Type Definition (DTD).

3.42 Document Type Definition (DTD). The definition of the markup rules for a given class of documents. A DTD or reference to one should be contained in any XML conforming document.

3.43 Durable items. Supplies not consumed in use that retain their original identity during the period of use, such as weapons, machines, tools, and equipment.

Source: https://assist.dla.mil -- Downloaded: 2016-12-09T23:24Z
Check the source to verify that this is the current version before use.

3.44 Effectivity. The act or process of identifying weapon systems or end-items and their hardware and software system and subsystems by their associated Usable On Code (UOC), serial number, model number, Part Number (P/N)/CAGEC, National Stock Number (NSN), End Item Code (EIC), software version or Modification Work Order (MWO). Effectivity is included to signify that certain configuration(s) or modifications apply to a given weapon system/equipment.

3.45 Electronic Countermeasure (ECM). An electrical or electronic device designed to trick or deceive radar, sonar or other detection systems, like infrared (IR) or lasers. It may be used both offensively and defensively to deny targeting information to an enemy. The system may make many separate targets appear to the enemy, or make the real target appear to disappear or move about randomly. It is used effectively to protect aircraft from guided missiles. Most air forces use ECM to protect their aircraft from attack. It has also been deployed by military ships and recently on some advanced tanks to fool laser/IR guided missiles. It is frequently coupled with stealth advances so that the ECM systems have an easier job. Offensive ECM often takes the form of jamming. Defensive ECM includes using blip enhancement and jamming of missile terminal homers.

3.46 Electronic Technical Manual (ETM). An ETM is a page-oriented file usually based on a paper original that may or may not be prepared from a digital database. An ETM usually has hyperlinks added. ETMs can be distributed as digital media or printed on paper.

3.47 Electrostatic Discharge (ESD). Static electricity. A transfer of electrostatic charge between objects of different potentials caused by direct contact or induced by an electrostatic field. Devices such as integrated circuits and discrete devices (e.g., resistors, transistors, and other semiconductor devices) are susceptible to damage from electrostatic discharge.

3.48 End Item Code (EIC). A final combination of end products, component parts, or materials that is ready for its intended use (e.g., tank, mobile machine shop, aircraft, receiver, rifle, recorder).

3.49 Equipment. One or more units capable of performing specified functions.

3.50 Equipment conditions. Equipment conditions are any conditions that must be met before a maintenance task can be started. Equipment conditions are listed in the initial setup and linked to appropriate work packages.

3.51 Equipment Improvement Recommendation (EIR). Solicitation of suggestions from end item users/operators for means to improve the operation and effectiveness of equipment. The Standard Form (SF) 368 is the instrument by which suggested improvements are forwarded to the cognizant agency.

3.52 Equipment nomenclature. The official name of the equipment as shown in FEDLOG H6 listing.

3.53 Essential. Those systems/subsystems/components that are required for a designated mission or system operation.

3.54 Evacuation. A combat service support function which involves the movement of recovered materiel from a main supply route; maintenance collection materiel may be returned to the user, to the supply system for reissue, or to property disposal activities.

3.55 Expendable items. Items, other than repair parts that are consumed in use (e.g., paint, lubricants, wiping rags, tape, cleaning compounds, sandpaper).

Source: https://assist.dla.mil -- Downloaded: 2016-12-09T23:24Z
Check the source to verify that this is the current version before use.

3.56 Extensible Markup Language (XML). A set of rules for encoding documents electronically through the use of markup. Its primary purpose is to facilitate the sharing of structured data across different information systems. It is a product of the World Wide Web Consortium (W3C).

3.57 Extensible Style sheet Language (XSL). A style sheet language that can be used for rendering XML documents.

3.58 Extensible Style sheet Language Formatting Objects (XSL-FO). A subset of Extensible Style sheet Language Transformation (XSLT) that is used to format valid and well formed XML into a page-oriented output. This output may be a direct print to paper or it may be to an electronic page-oriented presentation such as a Portable Document Format (PDF) file.

3.59 Extensible Style sheet Language Transformation (XSLT). A declarative, XML-based language used to transform XML documents into other XML documents. XSLT is supported by the World Wide Web Consortium (W3C).

3.60 Final Reproducible Copy (FRC). The final document ready for reproduction and publication as an authenticated TM, including all necessary changes made as a result of validation/verification and acquisition activity conditions of acceptance or approval.

3.61 Follow-on maintenance. Maintenance task(s) that must be accomplished sometime following the completion of a maintenance task(s). Follow-on maintenance is used to clean up or undo actions performed prior to or during a maintenance task and may be done directly after the task or after several tasks. For example, if a panel is removed to perform maintenance, it must be put back when the maintenance task is complete or may be done after several tasks requiring removal of the panel are completed.

3.62 Footer. One or more lines of standard text that appear at the bottom of each page (also called feet and running feet).

3.63 Functional diagram. A type of illustration in which symbols are connected by lines to show relationships among the symbols. The symbols may be rectangles or other shapes, standard electronic symbols representing components or functions, or pictorials representing equipment or components. Where appropriate, voltage readings are shown. The lines may represent procedures or processes, such as signal or logic flow, and physical items, such as wires. Functional diagram includes schematics, wiring and piping diagrams, flow charts, and block diagrams.

3.64 Functional Group Code (FGC). A numeric or alphanumeric code assigned to identify major components, assemblies, and subassemblies to a functional system. Subordinate subfunctional groups/subassemblies are coded to relate back to the basic (top position) FGC in a sequential, Next Higher Assembly (NHA) relationship. For aviation systems, FGCs are prescribed by DA PAM 738-751. For tactical ground vehicles, refer to TB 750-93-1.

3.65 General maintenance. General maintenance is procedures that can be applied to multiple types of equipment. Examples of general maintenance are painting, lubrication, preservation, cleaning, marking, etc. General maintenance procedures can be provided to a user either in the maintenance manual for the equipment or in a separate general maintenance manual.

3.66 Graphic(s). Any type of presentation or representation, which gives a clear visual impression.

Source: https://assist.dla.mil -- Downloaded: 2016-12-09T23:24Z
Check the source to verify that this is the current version before use.

3.67 Hazardous Air Pollutant (HAP)-free. HAP-free means a material that contains no more than 0.1 percent by mass of any individual HAP that is an Occupational Safety and Health Act-(OSHA-) defined carcinogen as specified in 29 Code of Federal Regulations (CFR) 1910.1200(d)(4) and no more than 1.0 percent by mass for any other individual HAP, as demonstrated by a specification or a standard, or a manufacturer's representation, such as in a material safety data sheet or product data sheet.

3.68 Hardness Critical Item (HCI). A support item that provides the equipment with special protection from electromagnetic pulse (EMP) damage during a nuclear attack.

3.69 Hardness Critical Process (HCP). A process affecting a mission critical item which could degrade system survivability in a nuclear, biological, or chemical hostile environment if hardness were not considered. Nuclear HCPs are processes, finishes, specifications, manufacturing techniques, and/or procedures which are hardness critical, and which, if changed, could degrade nuclear hardness.

3.70 Hardtime interval maintenance. Hardtime interval maintenance is scheduled maintenance conducted at predetermined fixed intervals because of age, calendar, or use such as operating time, flying hours, miles driven, or rounds fired.

3.71 Header. One or more lines of standard text that appear at the top of each page (also called heads and running heads).

3.72 Horizontal (landscape) TM format. Positioning of technical manual so that page horizontal (width) dimensions are greater than vertical (height) dimensions.

3.73 Icon. Pictorial representation; visual image to give immediate recognition of a hazard or to provide essential information.

3.74 Illustration. A general term meaning graphic presentations of all types. Illustrations include pictorials, functional diagrams, and line graphs. This term is used synonymously with figure, graphic, drawing, diagram, and artwork.

3.75 Institute of Electrical and Electronics Engineers (IEEE). Membership organization that includes engineers, scientists, and students in electronics and allied fields. Founded in 1963, it has over 300,000 members and is involved with setting standards for computers and communications.

3.76 Interchangeability. The ability to use a part/component on more than one end item or assembly due to similar fit, form and function.

3.77 International Organization for Standardization (ISO). Organization that sets international standards, founded in 1946 and headquartered in Geneva. It deals with all fields except electrical and electronics, which is governed by the older International Electrotechnical Commission (IEC), also in Geneva. With regard to information processing, ISO and IEC created the Joint Technical Committee (JTC 1) for Information Technology.

3.78 Item unique identification (IUID). A system of establishing unique item identifiers within the Department of Defense by assigning a machine-readable character string or number to a discrete item, which serves to distinguish it from other like and unlike items.

3.79 Kit, tool. An assembly of tools/components in a small pouch or box, designed for use of and carried by an individual or crew, type classified with a unit of issue of kit.

Source: https://assist.dla.mil -- Downloaded: 2016-12-09T23:24Z
Check the source to verify that this is the current version before use.

3.80 Landscape mode. To print an image sideways on the page so that the longest edge of the form corresponds to the horizontal axis.

3.81 Leak rate. The speed or rate of flow of accidental escape of fluid or gas from a system, which is caused by damage processes. The leak rate is influenced by such factors as the hole size, internal/external pressures, and fluid level.

3.82 Legend. A tabular listing and explanation of the numbers or symbols on a figure or an illustration.

3.83 Limited repair. Scope of corrective repair authorized to be performed by a level of maintenance lower than the level of authorized complete repair.

3.84 Line Replaceable Unit (LRU). An item normally removed and replaced as a single unit to correct a deficiency or malfunction on a weapon system or end item of equipment.

3.85 List of Applicable Publications (LOAP). A separate listing of publications which are related to a specific piece of equipment, group of equipment, or system. For additional information, refer to MIL-PRF-63049.

3.86 Logistics Product Data (LPD). The LPD comprises the support and support-related engineering and logistics data acquired for use in materiel management processes such as those for initial provisioning, cataloging, and item management. Depending upon specific program requirements, this data may be in the form of summary reports, a set of specific data products, or both.

3.87 Maintainer Maintenance. Consists of the following:

a. Performance of PMCS.

b. Inspections.

c. Lubrication, cleaning, preserving, tightening, replacement, and minor adjustments authorized by the MAC.

d. Diagnosis and fault isolation as authorized by the MAC.

e. Replacement of unserviceable parts, modules, and assemblies as authorized by the MAC.

f. Requisition, receipt, storage, and issue of repair parts.

g. Verification of faults and level of repair of unserviceable materiel prior to evacuation.

h. If beyond the MAC authorization, evacuate to next higher level (sustainment) turn in to the appropriate supply support activity.

i. Recovery or coordination for transportation of equipment to and from the support unit of action

j. Accomplishment of all actions directed by the AOAP.

k. Materiel readiness reporting.

l. Coordination and annotation of field level MWOs.

m. Providing maintenance support to sustainment maintenance activities.

Source: https://assist.dla.mil -- Downloaded: 2016-12-09T23:24Z
Check the source to verify that this is the current version before use.

n. Diagnosis and isolation of materiel or module malfunctions, adjustment, and alignment of modules that can be readily completed with assigned tools and TMDE.

o. Performance of light body repair.

p. Turn-in of maintenance repair codes F, D, H, and L recoverable components to the support activity.

q. Fabrication as identified by the appropriate TM.

r. Operation of cannibalization points, when authorized.

s. Identify and annotate corrosion and take corrective actions within the organization's capability to prevent or repair corrosion damage to Army materiel.

3.88 Maintenance Allocation Chart (MAC). A list of equipment maintenance functions showing maintenance level, maintenance class, and corresponding man-hours required for each task. The MAC is arranged in functional group code sequence or top-down breakdown sequence and uses the same sequence as used in the RPSTL.

3.89 Maintenance class. Maintenance classes are subsets of field and sustainment maintenance levels. They identify and implement the specific activity, identified by the MAC, to perform the maintenance. The maintenance classes of both the field and sustainment maintenance levels are further separated by aviation and non-aviation and the corresponding classes are shown below:

a. Field level classes:
   (1) Aviation:
      (a) Aviation Maintenance Company (AMC) – corresponds to MAC code - O.
      (b) Aviation Support Battalion (ASB) – corresponds to MAC code - F.
   (2) Non-aviation:
      (a) Crew (operator) – corresponds to MAC code - C (can be O in joint service manuals).
      (b) Maintainer – corresponds to MAC code - F.
b. Sustainment level classes:
   (1) Aviation:
      (a) Theater Aviation Sustainment Maintenance Group (TASMG) – corresponds to MAC code - L.
      (b) Depot – corresponds to MAC code - D.
   (2) Non-aviation:
      (a) Below depot – corresponds to MAC code - H.
      (b) Depot – corresponds to MAC code - D.

3.90 Maintenance function. Maintenance function is synonymous with maintenance tasks (refer to 3.93 for definition) and is used in the MAC and in maintenance policy documents.

3.91 Maintenance level. The primary division of maintenance activities. The U.S. Army uses a two-level maintenance concept. The two levels are field and sustainment.

Source: https://assist.dla.mil -- Downloaded: 2016-12-09T23:24Z
Check the source to verify that this is the current version before use.

3.92 Maintenance significant. Refers to a maintenance item, whose failure could affect safety for ground or aviation equipment or significantly impact operations. For maintenance and inspection instructions, maintenance significant could include systems, subsystems, modules, components, accessories, units, and parts.

3.93 Maintenance task. A group of instructions with supporting illustrations on how to perform a maintenance action such as remove or install, etc. Each task has a definite beginning and end. A task is made up of one or more procedures. The term "function" is synonymous with task and is primarily used in the maintenance allocation chart and in maintenance policy documents.

3.94 Man-hours. Man-hour time is only shown in the Maintenance Allocation Chart and is determined by multiplying Task Time by the number of maintenance personnel required to perform the task. Man-hours are used for vehicle classification inspections and when determining Maintenance Expenditure Limits (MEL).

3.95 Mean Time Between Failures (MTBF). Mean time between failure (MTBF) refers to the average amount of time that a device or product functions before failing. This unit of measurement includes only operational time between failures and does not include repair times, assuming the item is repaired and begins functioning again. MTBF figures are often used to project how likely a single unit is to fail within a certain period of time under specific conditions.

3.96 Mean Time To Repair (MTTR). MTTR is a basic measure of the maintainability of reparable items. It represents the average (mean) time required to repair a failed component or device.

3.97 Modified Table of Organization and Equipment (MTOE). A modified version of a TOE that authorizes the unit organization, personnel, and equipment needed to perform an assigned mission in a specific geographical or operational environment.

3.98 Modification Work Order (MWO). Detailed instructions (including text and graphics) for making changes/improvements to a particular system in order to bring the system up to date and/or to improve its overall efficiency.

3.99 Module. A self-contained assembly of electronic components and circuitry, such as a circuit board in a computer, that is installed as a unit.

3.100 National Item Identification Number (NIIN). The last nine digits of the National/North Atlantic Treaty Organization (NATO) stock number. The first two digits of the NIIN identify the country assigning the number and the remaining seven digits are a serially assigned number.

3.101 National Maintenance Work Requirement (NMWR). A maintenance serviceability standard for depot level reparables that do not have an existing depot maintenance work requirement and for field level reparables that are repaired by maintenance activities below the depot level maintainers for return to the Army supply system.

3.102 National Stock Number (NSN). A 13-digit number assigned to a repair part to be used for requisitioning purposes.

3.103 Next Higher Assembly (NHA). The assembly/subassembly that a part/component is attached to. In a hierarchical parent/child part structure, next higher assembly refers to the “parent” of the part in question.

Source: https://assist.dla.mil -- Downloaded: 2016-12-09T23:24Z
Check the source to verify that this is the current version before use.

3.104 Nomenclature. The approved name or alphanumeric identifier assigned to an item, equipment, or component in agreement with an organized designation system.

3.105 Operating instructions. Explicit step-by-step information that provides the user direction on how to use a piece of equipment.

3.106 Orphan. Last line of a paragraph pushed to a new page, stranded alone (orphaned) at the top of the page without the rest of its paragraph.

3.107 Outfit. An assemblage of tools or equipment, type classified, assigned a LIN, with a unit of issue of outfit; it may include separately type classified items as a component, such as pneumatic tool and compressor outfit, water purification outfit, tool outfit hydraulic systems repair, and tool outfit pioneer portable electric tools.

3.108 Overhaul Inspection Procedure (OIP). Routine maintenance inspection conducted just before period specified for removal of aircraft for overhaul or retirement.

3.109 Page-based Technical Manual (TM). A TM consisting of text, illustrations, and tabular data presented in a standard page-oriented format.

3.110 Part Number (P/N). A primary number used to identify an item used by the manufacturer (individual, company, firm, corporation, or Government activity) that controls the design, characteristics, and production of the item by means of its engineering drawings, specifications, and inspection requirements.

3.111 Phased Maintenance Inspection (PMI) (aircraft). A thorough and searching examination of the aircraft and associated equipment. Removal of access plates, panels, screens, and some partial disassembly of the aircraft is required to complete the inspection. Inspections are due after an appointed number of flying hours since new or from the completion of the last inspection.

3.112 Pictorial. A type of diagram used to show the physical view of components and to show relative location and size.

3.113 Portrait mode. To print an image so that the longest edge of the form corresponds to the vertical axis.

3.114 Preshop analysis. To determine, before beginning maintenance activities, the extent of maintenance required to return the end item, assembly, subassembly, or component to a serviceable condition as specified by the depot level maintenance instructions.

3.115 Preventive maintenance (scheduled maintenance). The performance of scheduled inspections and maintenance functions necessary to keep the equipment in serviceable condition and ready for its primary mission.

3.116 Preventive Maintenance Checklist (PMC). A stand-alone publication which contains PMCS information for any or all maintenance levels and intervals that is performed by the operator and/or maintainer to ensure that the equipment is mission capable and in good operating condition. The information in the PMC is extracted from the associated operator and/or maintenance manuals.

3.117 Preventive maintenance daily (aircraft). Inspection of aircraft and associated equipment after the last flight of the mission day or before the first flight of the next day. Some operational checks and removal of screens, panels, and inspection plates may be required to accomplish the inspection.

Source: https://assist.dla.mil -- Downloaded: 2016-12-09T23:24Z
Check the source to verify that this is the current version before use.

3.118 Preventive maintenance services inspection (aircraft). Special recurring inspection of aircraft and associated equipment after an appointed number of flying hours or days whichever occurs first (e.g., 10 flying hours or 14 days). Some operational checks and removal of screens, panels, and inspection plates may be required to accomplish the inspection.

3.119 Preventive Maintenance Checks and Services (PMCS). Preventive maintenance checks and service is the care, servicing, inspection, detection, and correction of minor faults before these faults cause serious damage, failure, or injury. The procedures and the category of maintenance to perform PMCS are found in the TM, LO, and sometimes PMC. Lubrication may be included in PMCS. PMCS procedures can be performed by maintainers at any level of maintenance, not just by operators. PMCS is for non-aviation systems only. Scheduled PMCS is usually performed by field maintainers and takes the equipment out of service for a period of time.

3.120 Procedure. A set of step-by-step actions required to accomplish a task or a portion thereof. There are one or more procedures in a task.

3.121 Proponent. An Army organization or staff that has been assigned primary responsibility for materiel or subject matter in its area of interest.

3.122 Publication Identification Number (PIN). A number (assigned by Army Publishing Directorate (APD) to each publication) that can be found in DA PAM 25-30 and is comprised of six numerals and a three-digit "change number" field that permits ordering a specific change to the publication (e.g., 001 for change 1, 023 for change 23).

3.123 Publication number. The number shown on the cover of each publication as constructed per DA PAM 25-40 (e.g., TM 1-1520-238-10).

3.124 Quality Assurance (QA). A planned and systematic pattern of all actions necessary to provide adequate confidence that the item or product conforms to established technical requirements.

3.125 Raster graphics. Raster graphics use a dot matrix data structure representing a generally rectangular grid of pixels, or points of color. Raster graphics are resolution dependent and cannot scale up to an arbitrary resolution without loss of apparent quality. Raster graphics are not easily editable

3.126 Reading Grade Level (RGL). A measurement of reading difficulty of text related to grade levels (such as ninth grade level, fourteenth grade level, etc.).

3.127 Reference Designator (REFDES). Letters or numbers, or both, used to identify and locate discreet units, portions thereof, and basic parts of a specific equipment, assembly, or subassembly.

3.128 Reliability, Maintainability and Supportability (RMS) and Operational Availability (Ao). Requirements imposed on materiel systems to ensure that they are operationally ready for use when needed, will successfully perform assigned functions, and can be economically operated and maintained within the scope of logistic concepts and policies.

3.129 Reliability Centered Maintenance (RCM). A systematic approach for identifying preventive maintenance tasks for an equipment end item in accordance with a specified set of procedures and for establishing intervals between maintenance tasks.

Source: https://assist.dla.mil -- Downloaded: 2016-12-09T23:24Z
Check the source to verify that this is the current version before use.

3.130 Reparable item. An item that can be restored to perform all its required functions by corrective maintenance.

3.131 Repair part. Consumable items or material required for the maintenance, overhaul or repair of a system, equipment, or end item

3.132 Repair Parts and Special Tools List (RPSTL). The technical document which contains an introduction, list of repair parts, list of special tools, NSN index, part number index, and reference designator index for a specified equipment item.

3.133 Revision. A revision is comprised of corrected, updated, or additional pages or work packages to the current edition of a manual. It consists of replacement work packages that contain new or updated technical information or improves, clarifies, or corrects existing information in the current edition of the manual.

3.134 Schematic diagram. A graphic representation showing the interrelationship of each component or group of components in the system/equipment. The essential characteristic of these diagrams is that every maintenance-significant functional component is separately represented. Also, where appropriate, voltage readings, hydraulic values, and pneumatic values should be shown.

3.135 Service. Operations required periodically to keep an item in proper operating condition such as replenishing fuel, lubricants, chemical fluids, or gases.

3.136 Set. A unit and necessary assemblies, subassemblies, and parts connected together or used in association to perform an operational function (e.g., radio receiving set, measuring set, radar, or homing set which includes parts, assemblies, and units such as cables, microphones, and measuring instruments).

3.137 Set, Tool. A collection of tools/components used by a group, section, squad, platoon or unit usually supplemented by tool kits to perform an organizational mission, type classified, assigned a LIN, with a unit of issue of set.

3.138 Software bug. A software bug is an error, flaw, failure, or fault in a computer program or system that causes it to produce an incorrect or unexpected result, or to behave in unintended ways.

3.139 Source, Maintenance, and Recoverability (SMR) code. This code is composed of four parts consisting of a two-position source code, a two-position maintenance code, a one-position recoverability code and a one-position Service option code. The first two positions of the SMR code indicate the source for acquiring the item for replacement purposes. The third position represents who can install, replace, or use the item. The fourth position dictates whether the item is to be repaired and identifies the lowest maintenance level with the capability to perform a complete repair action. The fifth position indicates the recoverability intention and the maintenance level authorized disposition action on unserviceable support items and for reparable items. The sixth position is unique to each Service and is used to disseminate specific instructions to that Service's logistics business process.

3.140 Spare part. Reparable component or assembly used for maintenance replacement purposes in the end items of equipment. They are articles identical to or interchangeable with the components of end items on contract which are procured over and above the quantity needed for initial installation for support of a system.

Source: https://assist.dla.mil -- Downloaded: 2016-12-09T23:24Z
Check the source to verify that this is the current version before use.

3.141 Special tools. Those tools that have single or peculiar application to a specific end item/system.

3.142 Specialized repair activity. A level of maintenance usually characterized by the capability to perform maintenance functions requiring specialized skills, disciplined quality control, highly sophisticated and expensive special tools, and test, measurement, and diagnostic equipment (TMDE). Its phases normally consist of adjustments, calibration, alignment, testing, troubleshooting, assembly, disassembly, fault isolation, and repair of unserviceable parts, modules, and printed circuit boards (PCBs).

3.143 Standard for the Exchange of Product model Data (STEP). STEP is defined in the ISO 10303 series. STEP is a file format which defines a vendor neutral data format that allows the digital exchange of information among Computer-Aided Design (CAD) systems.

3.144 Standardization Agreement (STANAG). In NATO, a standardization agreement (STANAG) defines processes, procedures, terms, and conditions for common military or technical procedures or equipment between the member countries of the alliance. Each NATO state ratifies a STANAG and implements it within their own military. The purpose is to provide common operational and administrative procedures and logistics, so one member nation's military may use the stores and support of another member's military. STANAGs also form the basis for technical interoperability between a wide variety of communication and information (CIS) systems essential for NATO and Allied operations.

3.145 Subassembly. Two or more parts that form a portion of an assembly or a component replaceable as a whole, but having a part or parts that are individually replaceable (e.g., gun mount stand, window recoil mechanism, floating piston, intermediate frequency strip, mounting board with mounted parts).

3.146 Supply Catalog (SC). The DA publication, which is the configuration control document that provides the user identification of Sets, Kits, and Outfits (SKO) and its components. It also provides user supply management data and is an accountability aid. For Army, there is only one official SC with multiple component lists (CL).

3.147 Sustainment maintenance. Sustainment is off-system maintenance and is mainly repair of defective equipment/parts. Sustainment maintenance returns repaired equipment/parts to the supply system.

3.148 System. A combination of equipment end items, assemblies, major components, components, modules, and parts assembled as a single functional unit to perform a task or mission.

3.149 Table of Contents (TOC). A sequential list of chapter and work package titles and sometimes figure and table titles with corresponding work package sequence numbers, if applicable, for information within the TM. May contain page number references.

3.150 Tags. Descriptive markup, as in a start-tag and end-tag.

3.151 Tailoring. The process of evaluating individual potential requirements to determine their pertinence and cost effectiveness. The tailoring of data requirements is limited to the exclusion of information requirement provisions and selecting or specifying applicable requirements.

3.152 Task. A generic task is a procedure or set of procedures. Refer to definitions of operating instructions and maintenance task. Refer to AR 750-1 for exact terms and definitions.

Source: https://assist.dla.mil -- Downloaded: 2016-12-09T23:24Z
Check the source to verify that this is the current version before use.

3.153 Task time. This is the time noted in the work package initial setup and represents time-to-complete from start to finish including equipment conditions and follow-on maintenance

3.154 Technical Manual (TM). A manual that contains instructions for the installation, operation, maintenance, and support of weapon systems, weapon system components, and support equipment. TM information may be presented, according to prior agreement between the contractor and the Government, in any form or characteristic, including hard printed copy, audio and visual displays, electronic embedded media, discs, other electronic devices, or other media. They normally include operational and maintenance instructions, parts lists, and related technical information or procedures exclusive of administrative procedures.

3.155 Test, Measurement, and Diagnostic Equipment (TMDE). Any system or device used to evaluate the operational condition of an end item or subsystem thereof, or to identify and/or isolate any actual or potential malfunction. TMDE includes diagnostic and prognostic equipment, semiautomatic and automatic test equipment (with issued software), and calibration test or measurement equipment.

3.156 Test Program Set (TPS). The combination of interface devices, software test programs (such as those residing in logic storage media or in permanent digital memory), and documentation (for example, technical manuals and technical data packages) that together allows the ATE operator to perform the testing/diagnostic action on the unit under test (UUT).

3.157 Time Between Overhaul (TBO) items. Those items having a definite retirement schedule within a defined overhaul interval (e.g., those items that must be replaced within a system assembly, subassembly, or component between scheduled overhauls).

3.158 Title page. The first page after the warning summary in the front matter portion of a TM. It identifies the TM by publication number, date, title, NSN, part number, and model number of equipment covered in the manual.

3.159 Top-down breakdown. The pyramidal breakdown of an end item, with the top item being the complete end item. The process of breakdown is established from the engineering drawing structure in an NHA progression until the lowest reparable in each family tree group is identified. All nonreparables (spare parts) can be identified in like manner to establish their NHA relationships.

3.160 Usable On Code (UOC). A three-position alphanumeric code representing the applicable configuration in which an item is used.

3.161 User. A person using the TM.

3.162 Vector Graphics. Vector graphics are made up of paths, rather than individual pixels. These paths can be used to represent lines and shapes within the image. Vector images are made up of many individual, scalable objects. These objects are defined by mathematical equations rather than pixels, so they always render at the highest quality. Objects may consist of lines, curves, and shapes with editable attributes such as color, fill, and outline. Since vector graphics store image data as paths, they can be enlarged without losing quality, which makes them a good choice for logos and other types of drawings. This is the preferred format for graphics used in Army technical publications.

3.163 Wiring diagram. A diagram illustrating signal flow or wiring connections. Where appropriate, voltage readings should be shown.

Source: https://assist.dla.mil -- Downloaded: 2016-12-09T23:24Z
Check the source to verify that this is the current version before use.

3.164 Work Package (WP). Presentation of information functionally divided into tasks in the logical order of work sequence. These work packages should be stand alone and may contain one or more tasks. If capture of individual times and/or personnel is required for a program such as Condition Based Maintenance (CBM), maintenance work packages must contain only one task. The following work package types are covered in this standard: general information, operator instructions, troubleshooting tasks, maintenance tasks, parts information, supporting information, destruction of Army materiel to prevent enemy use, battle damage assessment and repair (BDAR), preventive maintenance checklist, and lubrication orders. A work package should contain all information or references required to support the work package type.

4. GENERAL REQUIREMENTS.

4.1 General. This standard provides the technical content requirements and mandatory style and format requirements for the preparation of page-based TMs and subsequent revisions covering operation and maintenance, at all levels of maintenance through depot, including depot maintenance work requirements (DMWRs) and national maintenance work requirements (NMWRs). This standard also provides format and content requirements for aircraft manuals (PMD, PMS, PMI, RPSTL, and troubleshooting manuals), destruction to prevent enemy use manuals, BDAR manuals, LOs, PMCs, software manuals, and general maintenance manuals. All requirements throughout this standard for depot maintenance or DMWRs shall be followed for NMWRs. Style and format requirements are provided in 4.7. Specific technical content requirements are provided in the following appendixes.

APPENDIX B — General Information, Equipment Description, and Theory of Operation
APPENDIX C — Operator Instructions (Except Aviation)
APPENDIX D — Troubleshooting Procedures
APPENDIX E — Maintenance Instructions
APPENDIX F — Repair Parts and Special Tools List (RPSTL)
APPENDIX G — Supporting Information
APPENDIX H — Destruction of Army Materiel to Prevent Enemy Use
APPENDIX I — Battle Damage Assessment and Repair (BDAR)
APPENDIX J — Preventive Maintenance Checklist
APPENDIX K — Lubrication Orders
APPENDIX L — DMWR for Maintenance/Demilitarization of Ammunition
APPENDIX M —Software Users Manuals (SUMs) and Software Administrator Manuals (SAMs)
APPENDIX N — General Maintenance Manuals

4.2 Types of technical publications. APPENDIX A lists specific technical content requirements for each type of publication, including multi-level TMs, covered by this standard. Each type of TM shall provide in detail the maintenance coverage prescribed for the applicable maintenance level(s) by the Maintenance Allocation Chart (MAC) and Source, Maintenance, and Recoverability (SMR) coded items. Unless otherwise specified, the following manual types shall be prepared as stand-alone manuals:

a. Ammunition-specific manuals **<ammo>**.

b. Phased Maintenance Inspections (PMIs) **<pmi>**.

c. Aircraft system trouble shooting **<sys-ts>**.

Source: https://assist.dla.mil -- Downloaded: 2016-12-09T23:24Z
Check the source to verify that this is the current version before use.

d. Destruction manual (when destruction instructions are not included in the basic TM) **<destruction_manual>**.

e. Battle damage assessment and repair **<bdar>**.

f. Lubrication orders (when not included in the PMCS) **<lubeorder>**.

g. Preventive maintenance checklist **<pmc>**.

h. DMWR for maintenance and demilitarization of ammunition **<dmwr_ammo>**.

i. Software users manual (SUM).

j. Software administrators manual (SAM).

k. General maintenance manuals.

4.3 Selective application and tailoring of content using Appendix A matrixes. This standard contains some requirements that may not be applicable to the preparation of all TMs. Selective application and tailoring of requirements contained in this standard are the responsibility of the acquiring activity and shall be accomplished using APPENDIX A. The applicability of some requirements is also designated by one of the following statements: unless specified otherwise by the acquiring activity; as specified by the acquiring activity; or when specified by the acquiring activity.

4.4 Preparation of digital data for electronic delivery. Data prepared and delivered digitally in accordance with this standard shall be extensible markup language (XML) tagged using the Army document type definition (DTD). The Army developed style sheets shall be used. Refer to 4.6 for information on obtaining or accessing the Army DTD and style sheets. XML tags used in the Army DTD are noted throughout the text of this standard in bracketed, bold characters (e.g., **<descwp>**) as a convenience for the author and to ensure that the tags are used correctly when developing a document instance.

4.5 Use of the Army Document Type Definition (DTD)/style sheets. The Army DTD referenced in this standard interprets the technical content and structure for the functional requirements contained in this standard. Development of page-based publications covered in this standard shall be accomplished through the use of this standard, the Army DTD, and the Army developed style sheets. MIL-HDBK-1222 provides further guidance and preferred style and format. The guidance contained in MIL-HDBK-1222 applies unless it conflicts with the requirements in this standard.

4.6 Obtaining the Army Document Type Definition (DTD)/style sheets. The Army DTD and style sheets, which are XML constructs, may be obtained from the USAMC Logistics Support Activity (LOGSA) as follows:

a. World Wide Web (WWW): LOGSA Web site (URL) https://www.logsa.army.mil/mil40051/menu.cfm.

b. U.S. Mail: Requested files will be mailed on Compact Disc-Read Only Memory (CD-ROM). Requests may be submitted as follows:

Written request:
Commander, LOGSA
ATTN: AMXLS-AP (Bldg 3307)
Redstone Arsenal, AL 35898

Source: https://assist.dla.mil -- Downloaded: 2016-12-09T23:24Z
Check the source to verify that this is the current version before use.

Telephone Request:

Commercial: (256) 955-0854

DSN: 645-0854

Email request: usarmy.redstone.logsa.mbx.tmss@mail.mil.

4.7 Style and format. This standard provides style and format requirements for the technical content requirements described in this standard. These requirements are considered mandatory and are intended for compliance. Style and format requirements for the technical content contained in TMs are provided in 4.7.1 through 4.7.27.4.8. Refer to MIL-HDBK-1222 for additional information and examples. The U.S. Government Publishing Office (GPO) Style Manual shall be used a general guide for capitalization, punctuation, compounding of words, numerals in text, and spelling of nontechnical words.

4.7.1 Examples of style and format. The examples provided in this standard are an accurate interpretation of the technical content, style, and format requirements contained in this standard and are provided to permit the effective use of the DTD. Any conflicts between examples and the text of the standard shall be resolved in favor of the text. (Refer to 1.4.).

4.7.2 TM divisions. The hierarchical breakdown of a TM is: volumes (if required), chapters, and work packages, paragraphs, subparagraphs, and steps. Each division used should have at least two occurrences (for example, where there is a Volume 1, there should be a Volume 2; where there is a Chapter 1, there should be a Chapter 2; etc.). Except for the RPSTL, volumes shall be partitioned only between chapters. Stand-alone RPSTL manuals may be volumized between parts lists **<plwp>**, special tools and parts list **<stl_partswp>**, kits **<kitswp>**, bulk items list **<bulk_itemswp>**, and special tools list **<stlwp>**.

4.7.2.1 Volume size and content.

a. Division into volumes shall occur when the number of printed pages (excluding pocket-sized TMs) exceeds 1,500 pages or 750 sheets. Each volume shall not exceed 1,500 pages or 750 sheets. A pocket-sized manual (4 x 5-1/2 inches) shall not exceed 200 pages or 100 sheets. Pocket-sized manuals shall not be divided into volumes.

b. Each volume of a series shall display the TM number on its cover and all pages that make up the volume. Front matter for each volume of a series shall include a title page, warning summary, change transmittal page (as applicable per volume), list of effective pages/work packages (as applicable per volume), and a table of contents (TOC). The first volume shall contain a complete (including all volumes information) table of contents. Refer to 5.2.3.

c. Rear matter for each volume of a series shall contain as a minimum reporting errors and recommending improvements DA Forms 2028, an authentication page, and back cover. A glossary, index, and foldout pages are included as applicable.

d. Separate volumes shall not be used to distinguish between models of equipment (e.g., -10 for basic model, -10-1 for model A, -10-2 for model B, etc.).

e. When a change causes a manual to exceed page limits in paragraph 4.7.2.1a above, the manual shall be divided into volumes.

Source: https://assist.dla.mil -- Downloaded: 2016-12-09T23:24Z
Check the source to verify that this is the current version before use.

4.7.2.2 Chapters. Chapters shall be used to divide TM data into specific functional information. Chapter types include General Information, Operating Instructions, Troubleshooting Information, Maintenance Information, Parts Information, and Supporting Information. Each chapter shall be made up of one or more work packages. Chapter titles shall be based on the titles given in the matrices in APPENDIX A and may be augmented as needed. There may be multiple chapters of each type as needed (e.g., multiple maintenance chapters, multiple troubleshooting chapters, etc.) Refer to MIL-HDBK-1222 for further guidance related to chapter ordering and content.

4.7.2.3 Work packages. Work packages shall be used to logically divide TM data into functional descriptive or task-oriented information. Work packages shall begin on a right-hand page. Work packages may contain one or more tasks. Refer to FIGURE 1 for an example of a work package with one task and FIGURE 2 for an example of a work package with multiple tasks. If capture of task time or personnel from initial setups is required for a program such as Condition Based Maintenance (CBM), maintenance work packages shall contain only one task. If the initial setups are different, tasks shall not be grouped into one work package. Refer to APPENDIX B through N for the specific content requirements for each of the functional work package types (e.g., description information, operator instructions, maintenance, troubleshooting, repair parts, and supporting information). Refer to MIL-HDBK-1222 for additional guidance on work package development.

4.7.2.3.1 Work package size. To facilitate the change/revision process, all work packages including RPSTL work packages shall be kept smaller (less than 50 pages). Refer to MIL-HDBK-1222 for further guidance on work package size.

4.7.3 Font size and style. Font style, size, and spacing shall be in accordance with best commercial practices for technical publications. However, the minimum font size for a regular manual is 8 point, logbook is 6 point, pocket-sized manual is 6 point, and the minimal for a graphic is 6 point. Type shall be proportionally spaced (non-monospaced). Fonts shall be selected for a balance between readability and economy of space. Setting text in all capital letters shall be limited to appropriate uses, such as major headings, acronyms, and equipment markings. For more guidance on font style, size, and spacing, refer to MIL-HDBK-1222.

4.7.4 Page size and orientation. The TM shall be prepared in a size selected from TABLE I as specified by the acquiring activity. Orientation of pages, either vertical (portrait) or horizontal (landscape), shall be consistent throughout a given manual for ease of use. The growing prevalence of TMs used in electronic display mode (instead of paper) makes this consistency extremely important. Exceptions may be made only if essential for proper grouping of information for the user's benefit. Otherwise, information shall be formatted or reformatted so that all pages have the same orientation.

NOTE

Take into account the binding edge when determining your margins.

Source: https://assist.dla.mil -- Downloaded: 2016-12-09T23:24Z
Check the source to verify that this is the current version before use.

TABLE I. Manual styles and trim sizes.

Style	Trim Size	Orientation	Maximum Printing Area
Pocket-sized	4 x 5½ 5½ x 4	Vertical Horizontal	$3^1/_8$ x 5 5 x $3^1/_8$
Logbook	6½ x 9½ 9½ x 6½	Vertical Horizontal	5½ x 8½ 8½ x 5½
Standard	8½ x 11 11 x 8½	Vertical Horizontal	7 x 10 10 x 7
Double Standard	17 x 11	Horizontal	15¾ x 9

4.7.5 Foldout pages.

a. Foldout pages, if needed, shall be the same height as regular pages in the standard manual only, and shall be folded 2, 4, or 6 times, depending on the width necessary. Each foldout shall have a blank apron wide enough for the user to look at the data while reading text elsewhere in the TM. The pages following the apron shall fold up narrower than the apron to accommodate holes. Foldouts shall not be used in RPSTLs or operator-only TMs.

b. TABLE II lists the foldout maximum trim sizes and foldout maximum printing area for foldout pages. The minimum margin is ½-inch top and bottom and ½ inch on the side opposite the binding edge.

c. Foldout pages shall be the last printed material in the TM or volume.

TABLE II. Foldout maximum page sizes (in inches).

Manual Trim Size	Foldout Maximum Page Trim Size (Including Apron)	Foldout Maximum Printing Area
8½ x 11 11 x 8½	45 x 11 11 x 45	36 x 10 10 x 36

4.7.6 Final Reproducible Copy (FRC). FRC shall be the final manuscript, reproducible copy, or electronic media delivery, with all necessary changes and corrections incorporated and including final resolution of all comments and recommendations made as a result of validation, verification, testing, and user review. The master copy of any TM is a set of digital files, not the hard-copy results. No particular layout requirements exist for FRC distinct from those for non-final drafts or proofs. The only special criterion for FRC is reproducibility. Its resolution and contrast must be sufficient for creation of offset plates or raster page images without loss of detail that would be noticeable to users. If the FRC is delivered as a portable document format (PDF) file, the PDF shall be capable of being edited, linked and having selectable and searchable text that can be copied and pasted. The PDF shall have all fonts embedded.

Source: https://assist.dla.mil -- Downloaded: 2016-12-09T23:24Z
Check the source to verify that this is the current version before use.

4.7.7 Warnings, cautions, and notes.

4.7.7.1 Warning **<warning>**. A warning shall be used to identify a clear danger for injury or death to the person doing that procedure. A warning shall also be used when there is both danger of injury or death to personnel and danger of damage to the equipment during that procedure.

4.7.7.2 Caution **<caution>**. A caution shall be used to identify a clear risk of damage to the equipment if the procedure is not followed correctly.

4.7.7.3 Note **<note>**. A note shall be used to highlight essential information, conditions, or statements or convey important instructional data to the user.

4.7.7.4 Display of warnings, cautions, and notes.

a. Warnings, cautions, and notes shall appear as follows:
   (1) If a warning/caution/note applies to the entire work package, it shall appear after the initial setup and before any procedures or tasks.
   (2) If a warning/caution/note applies to an entire task, it shall follow the title of the associated task.
   (3) If a warning/caution/note applies to an entire procedure, it shall follow the title of the associated procedure.
   (4) If a warning/caution/note applies to step(s), it shall precede the step or steps to which it applies. If a warning or caution applies to multiple steps, it shall precede the first step it applies to and indicate in the warning or caution the steps to which it applies.
b. Warnings, cautions, and notes shall not contain procedural step(s) and shall not be used to insert steps to avoid renumbering. Warnings, cautions, and notes shall not contain references to figures. Warnings, cautions, and notes shall not contain references to steps except to indicate the steps that the note applies to when it applies to multiple steps or to indicate applicability of steps to different models of the equipment.
c. If multiple warnings, cautions, and notes apply to the same text, warnings shall appear first, cautions shall appear second, and notes shall appear last.
d. The header **WARNING**, **CAUTION**, or **NOTE** shall be bold and centered above the appropriate text. Headers shall not be numbered or bulleted.
e. Warnings may have safety or hazard icon(s) and shall appear below the warning header.
f. Cautions may have icon(s) depicting equipment damage and shall appear below the caution header.
g. When a warning, caution, or note consists of two or more paragraphs, the header **WARNING**, **CAUTION**, or **NOTE** shall not be repeated above each paragraph.
h. Warnings on unrelated topics that pertain to the same task, procedure, or step(s) may be grouped under one heading. Cautions on unrelated topics that pertain to the same task, procedure, or step(s) may be grouped under one heading. Notes on unrelated topics that pertain to the same task, procedure, or step(s) may be grouped under one heading. Warnings, cautions, and notes shall not be mixed under one header (e.g., warnings grouped with cautions). When grouping warnings, cautions, or notes, each warning, caution, or note shall be separated by at least one line and may be bulleted but shall not be numbered. Warnings, cautions, and notes shall not contain any numbered lists.

Source: https://assist.dla.mil -- Downloaded: 2016-12-09T23:24Z
Check the source to verify that this is the current version before use.

i. Warning, caution, and note text shall be indented on the right and left. The text shall be left justified for warnings or cautions containing more than one line. For warnings, cautions, and notes containing only one line, the text shall be left justified under the heading.

j. The layout shall not result in warnings, cautions, and notes being divided so first lines of text or groups of icons appear on one page and remaining lines or groups of icons on another page.

k. Layout shall avoid warnings, cautions, and notes being placed on a different page than the paragraph to which they apply.

l. Warnings shall include basic first aid instructions/guidance in the event of exposure or injury (e.g., flush eyes with water, seek medical attention, cleanse affected area with soap and water, etc.).

m. Notes shall be allowed in the manual other than in a task, a procedure, or a step.

n. Warnings, cautions, and notes should be used judiciously to preserve their value and to avoid overuse. Warnings and cautions shall only be used if necessary to ensure safety of personnel and/or equipment.

4.7.7.5 Icons **<icon-set>**. The use of standardized icons to improve readers' recognition of hazards is encouraged. Approved icons for use in TM warnings are available online at https://www.logsa.army.mil/mil40051/warning-icons.cfm. Additional non-standardized warning icons shall be approved by the acquiring activity safety office. Equipment damage caution icons shall be approved by the acquiring activity safety office. Icons shall be used only if they clarify the notice, clearly depict the hazard, and can be reproduced clearly. Icons are not required for every warning. Icons used shall be defined in the Warning Summary. (Refer to 5.2.1.4.)

4.7.7.5.1 Development of icons. Icons are enclosed in a square or rectangular box. The signal word(s) for warning icons appear outside the box centered below the icon(s).

4.7.7.5.2 Safety warnings with icons **<icon-set>**. The approved safety warning icons are available on the LOGSA Web site at https://www.logsa.army.mil/mil40051/tmsspecs.cfm and can be used in conjunction with the **WARNING** header and description of the hazard. For additional information on the use and placement of warnings and icons, refer to MIL-HDBK-1222.

4.7.7.5.3 Hazardous materials warnings **<warning>**. Procedures prescribed for the operation and maintenance of equipment shall be consistent with the safety standards established by the Occupational Safety and Health Act (OSHA) Public Law 91-596 and Executive Order 12196. When exposure to hazardous chemicals or other adverse health factors or use of equipment cannot be eliminated, guidance pertaining to the exposure shall be included in the TM. A list of personnel protective devices shall also be included. Hazardous materials warnings may be presented in the standard warning format without an icon, or in conjunction with an icon, or a combination of icons as described in 4.7.7.4. The acquiring activity safety office shall approve the use of icons other than those presented on the LOGSA Web site at https://www.logsa.army.mil/mil40051/tmsspecs.cfm. Hazards that result from a combination of materials shall clearly be identified to indicate that mixing or combining the materials creates the hazard.

Source: https://assist.dla.mil -- Downloaded: 2016-12-09T23:24Z
Check the source to verify that this is the current version before use.

4.7.7.5.3.1 Format for hazardous materials warnings with icons **<icon-set>**. Hazardous materials warnings with icons consist of a **WARNING** header (refer to 4.7.7.4 c), the icon(s), and a full description of the hazardous material and the precautions to be taken.

4.7.7.5.3.2 Abbreviated format for hazardous materials warnings with icons **<icon-set>**. For commonly used substances only (e.g., dry cleaning solvent, hydraulic fluids, paints, etc.), an abbreviated format may be used for hazardous materials warnings. The abbreviated format consists of the **WARNING** header (refer to 4.7.7.4c), the icon(s), and the signal word(s) (e.g., ISOPROPYL ALCOHOL, TT-I-735) of the hazardous material. The signal word(s) for warning icons appear outside the box centered below the icon(s). The full description of the warning shall be placed in the warning summary. Icons may be used in TM warnings either singly or in combination. When icons are used in combination, the placement and format should adhere to the methods provided in MIL-HDBK-1222.

4.7.7.5.4 Equipment damage caution icons **<icon-set>**. The equipment damage caution icons can be used in conjunction with the **CAUTION** header and description of the equipment damage. For additional information on the use and placement of cautions and icons, refer to the requirements specified in 4.7.7.4.

4.7.8 Chapters.

4.7.8.1 Chapter title page **<titlepg>**. Each chapter shall begin with a chapter title page. Refer to FIGURE 3 for an example of a chapter title page. A chapter title page shall always be a right-hand page and shall not be numbered. A separate chapter title page is not required for pocket-sized manuals. For pocket-sized manuals, the chapter number and title may be placed on the top of the first page of the first work package of the chapter.

4.7.8.2 Chapter numbering. Chapters shall be numbered in sequential order throughout the TM using Arabic numerals. Chapters shall not be renumbered in separate volumes.

4.7.9 Work packages.

4.7.9.1 Work package number. A unique number shall be assigned to each work package. This identifier may be used for database retrieval purposes. The work package identification number shall not appear on the printed page and should not be confused with the work package sequence number in 4.7.9.2. It shall be assigned when preparing the document instance in accordance with the DTD and shall not be changed throughout the life of the work package. The work package identification number shall consist of an alpha designation for the type of information contained in the work package, a five-digit block number assigned by the acquiring activity, and the TM number less the maintenance level dash numbers. The TM number is used only to provide uniqueness and avoid duplication of a work package identification number. Other than that it shall not have significance. When reusing a work package, the work package identification number shall remain the same throughout the life of the work package and shall not be changed in the event the work package is reused in another manual.

Source: https://assist.dla.mil -- Downloaded: 2016-12-09T23:24Z
Check the source to verify that this is the current version before use.

a. The following alpha designators shall be assigned to the specific types of information contained within the work packages.

A	Ammunition information
B	BDAR information
C	PMC checklist information
D	Destruction information
G	General information
L	LO information
M	Maintenance instructions
O	Operator instructions
R	Repair Parts and Special Tools List (RPSTL)
S	Supporting information
T	Troubleshooting procedures
W	Software information

b. The following examples explain work package database identification numbering:

M00432-9-1425-646

M	Identifies a work package containing maintenance instructions.
00432	Identifies the 432nd work package containing specific maintenance instructions that was initially developed for the M270 Armored Vehicle Mounted Rocket Launcher.
9-1425-646	Identifies the M270 Armored Vehicle Mounted Rocket Launcher TM. This is the TM under which this work package was initially developed.

T02000-1-1520-238

T	Identifies a work package containing troubleshooting procedures.
02000	Identifies the 2000th work package containing specific troubleshooting procedures that was initially developed for the AH-64A Helicopter.
1-1520-238	Identifies the AH-64A Helicopter TM. This is the TM under which this work package was initially developed.

Source: https://assist.dla.mil -- Downloaded: 2016-12-09T23:24Z
Check the source to verify that this is the current version before use.

4.7.9.2 Work package sequential numbering. To maintain a sequential order in the TM and to facilitate referencing, each Work Package (WP) shall initially be assigned a four-digit number beginning with the number 0001. The work package sequence numbers shall run consecutively throughout the TM. For example, the first work package in chapter 2 will be assigned the number immediately following the last work package number in chapter 1 (e.g., if 0010 is the last work package in Chapter 1, 0011 will be the first work package in Chapter 2). Work package sequence numbers shall be assigned in numerical sequence.

4.7.9.2.1 Assignment of new work packages sequence numbers for a change. A new work package that is added to the end of a non-volumized TM or to the end of the last volume of a multi-volume TM shall use the next available four-digit work package number. For example, if 0098 is the number of the last work package in the TM, 0099 shall be the number of the new work package. A new work package that is inserted between two work packages shall use a point numbering scheme to create a new sequence number that logically fits between the two existing work package numbers. Point numbers shall start with "1" and continue in numerical sequence as needed. If the work packages already have point sequence numbers, an additional point level shall be added to create a new sequence number that follows the same criteria. For example, to insert three work packages between WPs 0010 and 0011, the numbers 0010.1, 0010.2, and 0010.3 shall be used. For example, to insert a work package between 0010 and 0010.1, the number 0010.0.1 shall be used. For example, to insert two work packages between 0010.2 and 0010.3, the numbers 0010.2.1 and 0010.2.2 shall be used. For example, to insert a work package between 0010.3 and 0011, the number 0010.4 shall be used.

4.7.9.2.2 Deletion of work packages in a change. When a work package is deleted in a change, the work package shall be removed and a page inserted with a statement that says "WP XXXX was deleted" and a vertical bar shall be placed next to this statement. The deleted work package shall be listed on the change transmittal sheet and the list of effective pages/work packages with the word "DELETED" next to it. All work packages following the deleted work package shall retain their original work package sequence number.

4.7.9.2.3 Assignment of work package sequence numbers in volumized TMs. When a TM is divided into two or more volumes, the work package sequence number shall continue in sequence. The first volume shall contain as many work packages as necessary beginning with 0001. The work packages contained in the second and subsequent volumes shall be numbered consecutively beginning with the number immediately following the last work package sequence number in the preceding volume.

4.7.9.3 Work package identification information **<wpidinfo>**. All work packages shall include the identification information entries in the following sequential order, as applicable. (Refer to FIGURE 4).

4.7.9.3.1 Maintenance class **<maintlvl>**. The following requirements shall be followed when selecting maintenance class for a work package:

a. The work package shall show the lowest maintenance class authorized to use the work package.

b. Operator instruction work packages in operator TMs shall have a maintenance class of either "operator" or “crew” and shall contain the word "instructions" (e.g., operator instructions).

Source: https://assist.dla.mil -- Downloaded: 2016-12-09T23:24Z
Check the source to verify that this is the current version before use.

c. Maintenance work packages in operator or maintenance TMs, NMWRs, DMWRs, PMCs, or LOs shall have the word "maintenance" as part of the maintenance class (e.g., operator maintenance, maintainer maintenance, AMC maintenance, etc.)

d. Troubleshooting work packages in operator or maintenance TMs, NMWRs, or DMWRs, shall include the word "troubleshooting" as part of the maintenance class (e.g., maintainer troubleshooting).

e. The MAC work package shall not have a maintenance class as part of the work package identification information.

f. RPSTL work packages shall have no lower than maintainer for maintenance class and shall have no other words.

g. For all other types of work packages in an operator or maintenance TM, PMC, LO, NMWR, or DMWR, the maintenance class shall contain no additional words and shall be the lowest level authorized for the work package (e.g., maintenance class for COEI/BII would be "operator", not "operator maintenance or operator instructions").

h. For destruction manuals, non-procedural work packages shall have the word "destruction" as its maintenance class. For procedural work packages, maintenance class shall be the lowest level authorized to perform the procedure followed by the word "destruction" (e.g., operator destruction).

i. For BDAR manuals, non-procedural work packages shall have the word "BDAR" as its maintenance class. For procedural work packages, maintenance class shall be the lowest level authorized to perform the procedure followed by the title (e.g., operator battle damage assessment, maintainer battle damage repair, etc.)

j. For software manuals (SUM/SAM), maintenance class shall either be user or administrator for non-procedural work packages in the SUM/SAM. For software maintenance work packages, maintenance class shall either be user maintenance or administrator maintenance. For software troubleshooting work packages, maintenance class shall be either user troubleshooting or administrator troubleshooting.

Refer to the figures in the appendixes in this standard and MIL-HDBK-1222 for further guidance and examples.

4.7.9.3.2 Work package title **<title>**. The title of the individual work package shall be listed (e.g., M144 Shop Van Semi trailer General Information).

4.7.9.3.3 Effectivity notice **<config>**. If applicable, an effectivity notice shall be included. When the work package does not apply to all configurations of the weapon system/equipment, the applicable configurations **<name>** covered by the work package shall be listed. Omit this requirement if the same task/procedure applies to all configurations. (If certain configurations require different tasks/procedures, separate work packages shall be prepared.)

4.7.9.3.4 Joint use. When TMs are acquired and specified by the Army for joint use with another or other services (Joint Service TMs), work packages in joint publications which do not apply to all services concerned shall be marked to indicate the service(s) to which they apply (e.g., LANDING GEAR MAINTENANCE (ARMY ONLY)).

Source: https://assist.dla.mil -- Downloaded: 2016-12-09T23:24Z
Check the source to verify that this is the current version before use.

4.7.9.4 Initial setup information **<initial_setup>**. The initial setup provides general information, equipment, parts, material, and authorized personnel required to perform and complete the task(s) included in the work package. Refer to FIGURE 1 for example of an initial setup. The following requirements shall be complied with:

a. Unless otherwise specified in this standard, all work packages shall include initial setup instructions **<initial_setup>**.

b. Initial setup shall be at the top of the work package directly following the work package identification information.

c. There shall be only one initial setup per work package.

d. The initial setup shall apply in its entirety to all the tasks included in the work package. If the initial setup is different, the tasks shall not be grouped in one work package.

e. As appropriate, referencing shall be established for all items in the initial setup.

f. When no initial setup instructions are required to perform the task(s), the title **INITIAL SETUP** shall be included with the words "**Not Applicable**", which is set by selecting the element **<null>**.

g. Initial setups shall not contain details such as national stock number (NSN), part numbers, commercial and government entity codes (CAGEC).

h. The items in paragraphs 4.7.9.4.1 through 4.7.9.4.11 shall be included in the initial setup in the order given. Items not applicable to the work package may be omitted.

4.7.9.4.1 Test equipment **<testeqp>**. All test equipment required to perform the procedure shall be listed by name **<name>**, the work package containing an overall listing of tools and special tools listed by work package number, and item number or document number **<itemref>**. Referencing will eliminate the need to repeat or update the part and model numbers throughout the TM.

4.7.9.4.2 Tools **<tools>**. Common tools which are not specific to the equipment shall be listed as follows in the initial setup:

a. Kits. The tool kit (box) assigned (on a one-per-mechanic-by-MOS basis) to the mechanic to be used in the maintenance of equipment shall be listed by name **<name>**, by the work package sequence number for tool identification list work package (COEI/BII work package sequence number for -10 operator manuals), and by item number or document number **<itemref>**. Tools in the kit may be further identified. If tools from a kit are further identified, they shall be listed underneath the tool kit in the initial setup with no indentation and referenced to the tool identification work package. A kit is defined as an assembly of tools/components in a small pouch or box, designed for use of and carried by an individual or crew, type classified with a unit of issue of kit.

Source: https://assist.dla.mil -- Downloaded: 2016-12-09T23:24Z
Check the source to verify that this is the current version before use.

b. Sets/Outfits. Sets/Outfits are listed in Table 2 of the MAC. The individual tools from the set or outfit shall be listed in the initial setup by name **<name>**, by the work package sequence number for the tool identification list work package (COEI/BII work package sequence number for -10 operator manuals), and by item number or document number **<itemref>** (e.g., Wrench, socket (WP 0123, Item 12)). A set is defined as a collection of tools/components used by a group, section, squad, platoon or unit usually supplemented by tool kits to perform an organizational mission, type classified, assigned a LIN, with a unit of issue of set. An outfit is defined as an assemblage of tools or equipment, type classified, assigned a LIN, with a unit of issue of outfit; it may include separately type classified items as a component, such as pneumatic tool and compressor outfit, water purification outfit, tool outfit hydraulic systems repair, and tool outfit pioneer portable electric tools.

c. Other individual tools. Other individual tools required for performance of the task which are not part of a kit, set, or outfit shall be listed in the initial setup by name <**name**>, by the work package sequence number of the tool identification list work package (COEI/BII work package sequence number for -10 operator manuals), and by item number or document number **<itemref>**.

Although the tools may be listed in other lists such as the Special tools list or the MAC tools list table, the tools in the initial setups shall be linked to the tool identification list work package (COEI/BII work package for -10 operator manuals) which contains details such as NSN, part number, and CAGEC.

4.7.9.4.3 Special tools **<spectools>**. Special tools which are used only for the piece of equipment covered in the manual shall be listed in the initial setup by name <**name**> and linked to the tool identification list work package (COEI/BII work package sequence number for -10 operator manuals). These tools are also in the special tools list in the RPSTL but shall not be linked to the RPSTL from initial setup.

4.7.9.4.4 Materials **<mtrlpart>**. All expendable items, support materials, bulk items, and Critical Safety Items (CSIs) shall be listed by, as a minimum, name **<name>;** by quantity **<qty>**, if applicable; by work package sequence number for work package containing details about the materials/parts (e.g., AAL, expendable and durable items list, RPSTL, CSI list, etc.); and by item number **<itemref>**, if any, or figure/group number as applicable. Materials shall be listed in the initial setup in the order they appear in the work package. Mandatory replacement parts shall be listed under a separate header (4.7.9.4.5) and shall not be listed under materials header. Referencing will eliminate the need to repeat or update the part and numbers throughout the TM. For example:

"Material/Parts

Grease (WP 0120, Item 5)

Range lock (WP 0120, Item 10)

Frequency Converter (WP 0122, Item 3)

Bracket Assembly, Chemical Alarm (WP 0121, Item 4)

Clamp, Loop (TM 11-1520-238-23P, Group 110503)"

Source: https://assist.dla.mil -- Downloaded: 2016-12-09T23:24Z
Check the source to verify that this is the current version before use.

4.7.9.4.5 Mandatory replacement parts **<mrp>**. Mandatory replacement parts shall be listed in the initial setup separate from other repair parts by, as a minimum, name **<name>**, quantity **<qty>**, if applicable, and will be linked to the mandatory replacement parts list work package in supporting information **<itemref>.**

4.7.9.4.6 Personnel required **<persnreq>**. A list of the type and quantity of personnel required for the task(s) in the work package shall be included. If a special skill set is required, the Military Occupational Specialty (MOS) designation shall be included. If a specific skill set is not required, the MOS may be excluded for tasks that do not require a specific skill set (e.g., lifting a heavy ramp on a vehicle). When an MOS is included, the MOS name **<name>** and MOS designator **<mos>** shall be included. If more than one of an MOS is needed, the **<qty>** shall be identified. If MOS is not included, only the quantity shall be listed in the initial setup. If both skilled personnel and additional unskilled helpers are needed for a task, the MOS required and the quantity of that MOS shall be listed first followed by the number of unskilled helpers required:

Example 1 (MOS needed)

"Personnel Required

Artillery Mechanic 91P (2)

Example 2 (No skill set required)

"Personnel Required

1 person

Example 3 (1 skilled person and helpers)

"Personnel Required

Artillery Mechanic 91P

Additional personnel (2)"

4.7.9.4.7 References **<ref>**. When necessary, other work packages, TMs, foldouts, and other sources (**<link>/<extref>/<xref>**) that are needed to complete the task shall be listed here. Only references not listed in equipment conditions shall be listed. If reference is to a work package within the TM, it shall be to a complete work package by work package sequence number as a minimum and may include the title if needed. Reference shall not include reference to any part of the work package (e.g., figure, table, paragraph, etc.) For example:

Example 1 (another document):

"References

TM 9-1015-252-20&P"

Source: https://assist.dla.mil -- Downloaded: 2016-12-09T23:24Z
Check the source to verify that this is the current version before use.

Example 2 (WP sequence #):

"References

WP 0056"

Example 3 (Title and WP Sequence #):

"References

Engine Shutdown, WP 0056)"

4.7.9.4.8 Equipment conditions **<eqpconds>**. Any special equipment conditions required before the task can be started shall be listed here and cross-referenced to the appropriate source (**<link>/<extref>/<xref>**) for setting up the condition **<condition>**. Equipment conditions shall be listed in the order that they should be performed. For example:

"Equipment Condition

Firing mechanism removed (WP 0010)"

4.7.9.4.9 Special environmental conditions **<specenv>**. Any special environmental conditions (such as ventilation, lighting, or temperature) **<condition>** that are required shall be listed here. The reason **<reason>** that such conditions are needed shall be explained. For example:

"Special Environmental Condition

Darkened area required for testing lights."

4.7.9.4.10 Drawings/diagrams/schematics required **<dwgreq>**. When necessary, all drawings, diagrams, and/or schematics required to complete the maintenance task and which are not included in the work package, shall be listed here. Drawings shall be listed by title **<dwgname>** and drawing number **<dwgno>**. For example:

"Drawings Required

Power Supply Schematic (132E470092)"

4.7.9.4.11 Estimated time to complete the task **<time.to.comp>**. If required by the acquiring activity, the estimated time it will take to complete the task(s) shall be included. Approved Logistics Product Data (LPD), service experience, performance data on similar equipment, and all other Reliability, Availability, and Maintainability (RAM) data available shall be used to estimate the time required to complete the task(s). For example:

"Time to Complete

8 Hours"

Source: https://assist.dla.mil -- Downloaded: 2016-12-09T23:24Z
Check the source to verify that this is the current version before use.

4.7.9.5 End of task/work package statement. The words "**END OF WORK PACKAGE**" shall be placed immediately following the last data item (e.g., text, illustration, etc.) at the end of any work package, except for the following RPSTL work packages; Repair Parts List, Kits Part List, Bulk Items, Repair Parts for Special Tools List, and Special Tools List. For these RPSTL work packages, the words "**END OF FIGURE**" shall be placed after the list. If multiple tasks are included in a work package, the words "**END OF TASK**" shall be placed at the end of each task.

4.7.9.6 Work package page numbering. Each work package shall be page numbered consecutively using the four-digit work package sequence number followed by -1, -2, -3, etc. (e.g., 0001-1, 0001-2, etc.). Page numbers shall be centered at the bottom of the page. Even numbers shall be assigned to the left-hand pages and odd numbers to right-hand pages.

4.7.10 Paragraphs.

4.7.10.1 Paragraph numbering. Paragraphs and subparagraphs within a work package shall be unnumbered.

4.7.10.2 Paragraphs and subparagraph titles. Paragraphs and subparagraphs shall have titles. The title shall begin at the left margin. Paragraph requirements shall be as follows:

a. Primary paragraph plus four subparagraph levels.
b. Multiple primary paragraphs in a work package.
c. Multiple blocks of text under a title are allowed.
d. If a paragraph is continued on subsequent pages, the first level paragraph title may be placed at the top of those pages (e.g., REMOVAL-CONT). If continuation headers are directed, the acquiring activity will ensure the style sheets used to publish the TMs support this capability. Any modifications to Army provided style sheets will be provided to proponent activity.

4.7.10.2.1 Format.

a. Primary Paragraph - Paragraph shall be flush left. Title shall be bold and capital case. Block text shall start on a separate line and shall have a blank line between title and text block.
b. Subparagraph Level 1 - Paragraph shall be flush left. Title shall be bold and title case. Block text shall start on a separate line and shall have a blank line between title and text block.
c. Subparagraph Level 2 - Paragraph shall be flush left. Title shall be bold, title case, and end with a period. Block text shall start immediately after the title.
d. Subparagraph Level 3 - Paragraph shall indent first line five spaces and the remaining text flush left. Title shall be bold, title case and end with a period. Block text shall start immediately after the title.
e. Subparagraph Level 4 - Paragraph shall indent first line ten spaces and the remaining text flush left. Title shall be bold, title case and end with a period. Block text shall start immediately after the title.

Source: https://assist.dla.mil -- Downloaded: 2016-12-09T23:24Z
Check the source to verify that this is the current version before use.

4.7.10.2.2 Continuation headers. The continuation header shall be in the same style and format as the original header (e.g., if it is centered and all caps, the continuation header shall be centered and all caps; if it is left justified and title case, the continuation header shall be left justified and title case).

4.7.11 Task titles. Each operator, maintenance, and troubleshooting task shall have a title. Maintenance task title shall include the maintenance function listed in the MAC.

4.7.12 Procedural steps. Procedural steps shall be used to present detailed step-by-step instructions for performing an operational or maintenance task. Procedural steps shall start with an action verb. **TEXT DELETED**

4.7.12.1 Procedural step levels. When required, procedural steps shall be divided into no more than six levels. The following demonstrates, by example, how procedural steps and subordinate steps levels shall be formatted and numbered.

EXAMPLE:

1. Primary procedural step number (1, 2, 3, etc.) is flush left. Text begins two spaces after the period following the numeral. The text is blocked.

   a. The first-level procedural subordinate step letters, (a, b, c, etc.), are immediately below the text of the first-level procedural steps. The text is blocked. If additional subordinate step letters are required, use aa., ab., etc., after z.

      (1) The second-level procedural subordinate step numbers, ((1), (2), (3), etc.), are immediately below the text of first-level procedural subordinate steps. The text is blocked.

         (a) The third-level procedural subordinate step letters, ((a), (b), (c), etc.), are immediately below the text of second-level procedural subordinate steps. The text is blocked. If additional subordinate step letters are required, use (aa), (ab), etc., after (z).

            1 The fourth-level procedural subordinate step numbers, (1, 2, 3, etc.), are immediately below the text of third-level procedural subordinate steps. The text is blocked.

               a The fifth-level procedural subordinate step letters, (a, b, c, etc.), are immediately below the text of fourth-level procedural subordinate steps. The text is blocked. If additional subordinate step letters are required, use aa, ab, etc., after z.

4.7.12.2 Procedural step titles. Procedural steps shall not have titles.

4.7.13 Tables and lists.

4.7.13.1 Placement of tables. Tables shall be placed in the TM on the same page or as soon after the first reference in the text as possible. Full-page tables using a horizontal (landscape) format shall be positioned so that the page must be rotated 90 degrees clockwise to be read. The table number and title shall be placed at the top of the table.

Source: https://assist.dla.mil -- Downloaded: 2016-12-09T23:24Z
Check the source to verify that this is the current version before use.

4.7.13.2 Table numbering. Tables shall be numbered. Table numbers shall be consecutive within each work package in the order of their reference starting with Arabic number 1. If only one table is referenced in a work package, it shall be numbered. Tables designated as **standard information per paragraph 4.7.13.7** shall be numbered.

4.7.13.3 Table titles. Tables shall have titles. The titles shall identify the contents or purpose of the table and distinguish that table from others in the TM. The table title shall appear above the table. If a table is two or more pages, table titles shall be continued on each page. The preferred table title format is provided in MIL-HDBK-1222. Tables designated as **standard information per 4.7.13.7** shall be titled.

4.7.13.4 Footnotes **`<ftnote>`** to tables. Footnotes shall appear at the bottom of the table. For multiple page tables, the footnotes shall appear on the last page of the table. The footnotes shall not be placed at the bottom of each page of multiple page tables. The preferred formatting for footnote numbering in tables is provided in MIL-HDBK-1222.

4.7.13.5 Table format. Tables designated as **standard information per 4.7.13.7** shall have no deviations to the number of columns, the titles in the column headings, and the required format. The standard information format is automatically generated by the applicable style sheet. The DTD provides for non-standard tables. For standard tables, the data required in APPENDIXES B through N shall be included regardless of format used. The preferred style and format for all non-standard tables is provided in MIL-HDBK-1222.

4.7.13.6 Lists. Lists may be used in lieu of tables, when appropriate. Lists may be unnumbered, numbered sequentially, or lettered alphabetically. They may have an optional title. Three types of lists are identified:

4.7.13.6.1 Definition list **`<deflist>`**. The definition list shall consist of the term **`<term>`** and the definition **`<def>`**. The definition list may have headers such as "**Term**" and "**Definition**" above the appropriate sections of the list.

4.7.13.6.2 Random list **`<randlist>`**. The random list shall consist of one or more items in a random order.

4.7.13.6.3 Sequential list **`<seqlist>`**. The sequential list shall consist of one or more items in a specified order, such as alphabetic, numeric, or alphanumeric.

4.7.13.7 Standard information. Data designated as **standard information** is prescribed in the following. The standard information specified data shall have no deviation to the content requirements including the use of standard headings. The standard information shall be presented as prescribed in the standard. Refer to APPENDIXES C through G of this standard and MIL-HDBK-1222 for examples. A list of tables that contain standard information is provided below:

a. Controls and Indicators (Refer to C.5.2.2.1.)
b. Checking Unpacked Equipment (Refer to E.5.3.2.3.3.2.)
c. Preventive Maintenance Checks and Services (PMCS) (Refer to E.5.3.4.)
d. Classification of Materiel Defects (Refer to E.5.3.5.3.2.2.1b.)
e. Overhaul and Retirement Schedule (Refer to E.5.3.6.3.)
f. Overhaul Inspection Procedures (OIPs) (Refer to E.5.3.9.3.)
g. Depot Mobilization Requirements (Refer to E.5.3.9.4.)

Source: https://assist.dla.mil -- Downloaded: 2016-12-09T23:24Z
Check the source to verify that this is the current version before use.

h. Special Inspections (Refer to E.5.3.13.1.5.)
i. Repair Parts List (Refer to F.5.3.6.)
j. Kit Parts List (Refer to F.5.3.8.)
k. Bulk Items List (Refer to F.5.3.9.)
l. Special Tools List (Refer to F.5.3.10.)
m. National Stock Number (NSN) Index (Refer to F.5.3.11.1.3.)
n. Part Number Index (Refer to F.5.3.11.2.)
o. Reference Designator Index (Refer to F.5.3.11.3.)
p. Standard Maintenance Allocation Chart (MAC) (Refer to G.5.3.3.4)
q. Aviation Maintenance Allocation Chart (AVMAC) (Refer to G.5.3.3.4)
r. Tools and Test Equipment Requirements (MAC/AVMAC) (Refer to G.5.3.4.)
s. Remarks (MAC/AVMAC) (Refer to G.5.3.5.)
t. Component of End Items (COEI) List (Refer to G.5.4.4.1.)
u. (MC) Supply System responsibility (SSR) List (Refer to G.5.4.4.)
v. Basic Issue Items (BII) List (Refer to G.5.4.5.)
w. Additional Authorization List (AAL) (Refer to G.5.5.4.)
x. (MC) Using Unit Responsibility Items (UURI) List (Refer to G.5.5.)
y. (CM) Collateral Material (CM) List (Refer to G.5.6)
z. Expendable and Durable Items List (Refer to G.5.7.4.)
aa. Tool Identification List (Refer to G.5.8.4.)
bb. Mandatory Replacement Parts List (Refer to G.5.9.4.)
cc. Critical Safety Items (CSI) (Refer to G.5.10.3.)

4.7.14 Placement of text.

a. Preferred text format for 8½ by 11-inch manuals is single column (page wide), although double column can be used. Both single- and double-column formatted work packages can be included in a single TM if it would make the data more readable or comprehensible, however, both formats should not be used in the same chapter. Text is single spaced (double spaced between procedural steps).
b. Procedural step text shall not be placed on an illustration.
c. Text shall always be positioned within the image area (within margins). The text shall be positioned above and below the illustration, and not on the illustration left or right sides.
d. The first line of a paragraph shall not be located at the bottom of the page or column (widow). The last line of a paragraph shall not be placed at the top of a new page (orphan). Do not place the title or header on the last line of a page or column. Widows and orphans are not allowed.

4.7.15 Placement of illustrations. Illustrations shall be placed as close to their reference in text as possible. Illustrations may float on a page to reduce the white space on a page. Whenever possible, place illustrations on the same or facing page of associated text. Foldout illustrations shall not be included in work packages, but shall placed inside the back cover after all of the other material in the manual or volume.

Source: https://assist.dla.mil -- Downloaded: 2016-12-09T23:24Z
Check the source to verify that this is the current version before use.

4.7.15.1 Rotating illustrations. When an illustration is wider than the page, the illustration may be placed sideways on a page (rotated 90 degrees counterclockwise). However, foldouts shall not be rotated.

4.7.15.2 Placement of text and related illustrations for pocket-sized TMs. Place text for pocket-sized manuals on the right-hand pages with supporting illustration on the facing left-hand pages.

4.7.15.3 Repeating illustrations. Illustrations are not repeated unless necessary to support multi-page descriptions of tasks or to support a different requirement in another part of the TM.

4.7.16 Margin data. Margin data (usually headers and footers) shall be placed outside the area of the page used for either text, full-page tabular data, or full-page illustrations, but within the printing area dimensions of the page. (Refer to 4.7.16.1 and 4.7.16.2.) Complete headers shall be prepared for all pages except for DA Form 2028s, back cover, and pocket-sized TMs (where the TM numbers shall only be on the front cover and back cover along with the PIN). Complete footers shall be prepared for all TM pages except front and back covers, authentication pages, and DA Form 2028s.

4.7.16.1 Headers. Headers shall consist of the security classification markings (refer to 4.7.22) if any, the TM number, and the work package sequence number (refer to 4.7.9.2). The security classification shall be centered at the top of the page. The TM number shall be centered beneath the security classification. The work package sequence number shall be on the same line as the TM number but shall be all the way to the right side of the page. (Refer to FIGURE 1) If the manual is jointly used by two or more Services, only the acquiring activity's TM number shall be placed on each page. TM numbers for pocket-sized TMs are required on front and back covers only. For pocket-sized manuals only, the work package sequence number may be placed only on the first page of the work package providing it is included as part of the page number on all pages of the work package. For foldout pages, the security classification and TM number shall be right-justified at the top of the foldout page. See FIGURE 5 for example. Authentication page shall have only the TM number and security classification in the header.

4.7.16.2 Footers. Footers shall include the security classification markings (refer to 4.7.22) if any, the page numbers (refer to FIGURE 1), and other information as specified by the acquiring activity (e.g., change designator).

4.7.16.2.1 Page numbering. Except for foldout pages, all TM page numbers shall be centered at the bottom of the page. Even numbers shall be assigned to left-hand pages and odd numbers to right-hand pages. For horizontal TMs, the upper pages shall have even numbers, and the lower pages shall have odd numbers. Page numbers shall be in boldface type. Page numbering for RPSTLs shall also be in accordance with this paragraph and 4.7.16.2.1.1 through 4.7.16.2.1.3.

4.7.16.2.1.1 Front matter. Page numbering for front matter shall be as follows.

a. Front cover. Front covers shall be unnumbered.
b. Warning summary. The pages of the warning summary shall be numbered consecutively using lowercase letters (e.g., a, b, c, etc.).
c. Change transmittal page. The change transmittal page shall be unnumbered.
d. List of effective pages/work packages. When a list of effective pages/work packages is prepared, it shall be numbered with upper case letters (e.g., A, B, etc.).

Source: https://assist.dla.mil -- Downloaded: 2016-12-09T23:24Z
Check the source to verify that this is the current version before use.

e. Title page, table of contents, and the how to use this manual section. These pages shall be numbered consecutively using lower case Roman numerals beginning with i (e.g., i, ii, iii, etc.). Numbering shall be continuous and shall not start over with "i" for the table of contents or how to use this manual information. Title page shall be numbered "i" and may be continued on page "ii". If title page is only on page "i", page "ii" shall be blank. Table of contents (TOC) shall always start on page "iii" and continue on. How to Use This Manual information shall begin on the next page following the TOC.

4.7.16.2.1.2 Rear matter. DA Forms 2028, authentication pages, metric conversion charts (on the inside of the back cover), and back covers shall be unnumbered. Page numbers for a glossary shall begin with Glossary-1, Glossary-2, etc. Page numbers for an index shall begin with Index-1, Index-2, etc.

4.7.16.2.1.3 Blank pages. Blank pages shall not be numbered and on the preceding or following page shall be denoted as a blank. For example, if page 0001-10 of a work package is blank, page 0001-9 shall have the number 0001-9/blank. Unless otherwise specified by the acquiring activity, blank pages shall contain no text (e.g., this page intentionally left blank) or any other information.

4.7.16.2.1.4 Foldout page numbers. Foldout page numbers shall be numbered consecutively using Arabic numbers prefixed by the letters "FP." The reverse side of foldout pages shall be blank and each foldout page number shall include a blank page notation (e.g., FP-1/blank, FP-3/blank, etc.). (Refer to FIGURE 5)

4.7.17 Abbreviations and acronyms. The first use of abbreviations and acronyms in each work package shall have the word(s) spelled out completely with the abbreviation or acronym in parentheses immediately after the word(s). Acronyms such as PMCS shall be in all capital letters and shall contain no spaces or periods but abbreviations such as e.g., U.S., etc. may contain periods.

a. Acronyms, abbreviations, and unusual terms may be used in any work package text, when applicable.

b. Acronyms, which are accepted as words (radar, sonar, laser, etc.) need not be included.

c. All abbreviations and acronyms used in the manual, including those in tables or figures, shall be defined in the "list of abbreviations/acronyms" paragraph of the general information work package. Refer to B.5.2.

d. Use of abbreviations and acronyms shall follow the following criteria:

   (1) Common abbreviations and acronyms shall be taken from ASME Y14.38.

   (2) DOD unique abbreviations and acronyms shall be taken from JP 1.02.

   (3) Army abbreviations and acronyms shall be taken from https://www.rmda.army.mil/abbreviation.

   (4) Any new abbreviations and acronyms shall be developed in accordance with AR 25-52.

e. When abbreviations or acronyms are used as markings on the equipment (placarding), the same abbreviations or acronyms shall be used in the TM.

Source: https://assist.dla.mil -- Downloaded: 2016-12-09T23:24Z
Check the source to verify that this is the current version before use.

f. Abbreviations and acronyms used in tables, but not found in the text or in any other portion of the TM, shall be spelled out in a footnote to the applicable table. Abbreviations and acronyms used in illustrations or figures, but not found in the text or in any other portion of the TM, shall be spelled out in a note to the applicable illustration or figure.

4.7.18 Symbols.

4.7.18.1 General information for symbols. All nonstandard symbols shall be defined in the list of abbreviations and acronyms contained in the General Information work package. (Refer to B.5.2.) New symbols shall not duplicate those presently listed in ASTM-F856 where possible.

4.7.18.2 Metric symbols. Metric symbols shall be in accordance with IEEE Std 945.

4.7.19 Nuclear hardness (hardness-critical processes) marking. All Hardness-Critical Processes shall be preceded with the acronym **HCP**. The acronym shall be prepared in boldface type and in the same style and size as the adjacent text. The acronym shall not be shown with the titles in the table of contents. Use of the acronym is as follows:

a. When the entire task and all subordinate paragraphs and steps relate to establishing nuclear hardness, the acronym **HCP** shall precede the task title (e.g., **HCP** DISASSEMBLY).

b. When the entire task and all subordinate paragraphs and steps do not contribute to establishing nuclear hardness, only those that do contribute shall be annotated with the acronym **HCP**. For example:

"SERVICING

1. _____

2. **HCP** _____**"**

c. Operating or maintenance actions which could degrade hardness, but which are not directly involved in establishing nuclear hardness, shall not be annotated with the acronym, but shall be preceded by a caution.

4.7.20 Electrostatic Discharge (ESD) sensitive marking. All paragraphs addressing handling or maintenance which could damage ESD sensitive parts shall be marked with the acronym **ESD** as shown in the following. The acronym shall be prepared in boldface type and in the same style and size as the adjacent text. The acronym shall not be shown with the titles in the table of contents. Use of the acronym is described in the following list:

a. When the entire task and all subordinate paragraphs and steps relate to ESD sensitive parts, the acronym **ESD** shall precede the task title (e.g., **ESD** DISASSEMBLY).

b. When the entire task and subordinate paragraphs and steps are not directly related to ESD sensitive parts, only those which do apply shall be annotated with the acronym **ESD**. For example:

"REMOVAL

1. _____

2. **ESD** _____**"**

Source: https://assist.dla.mil -- Downloaded: 2016-12-09T23:24Z
Check the source to verify that this is the current version before use.

c. Handling or maintenance actions which could damage ESD sensitive parts, but which are not directly related to handling or maintenance of ESD sensitive parts, shall not be annotated with the acronym **ESD**, but shall be preceded by a caution.

d. Mark figures, drawings, and schematics with the **ESD** acronym in accordance with MIL-STD-1686.

4.7.21 Quality Assurance (QA). Depot and aviation maintenance procedures, which have a QA impact, shall be identified by the acronym **QA** in boldface letters preceding the text. Only procedures at the step level shall be labeled with **QA**. For example:

"1. **QA** _____"

4.7.22 Special page markings. This paragraph covers page markings for classified manuals, those with other restrictive markings and emergency page markings.

4.7.22.1 Security classification.

4.7.22.1.1 Classification guidelines. When the acquiring activity requires the development of a classified publication, it shall be properly marked as cited in 4.7.22.2, 4.7.22.3, and the current security directives. To ensure proper protection of classified markings, if there is a conflict between the text contained herein and the current security directives, the current security directives shall take precedence. The security classification markings for classified publications, titles of parts, chapters, work packages, paragraphs, illustrations, tables, and their contents, shall be identified in accordance with DODM 5200.01 volumes 1-4, DOD 5220.22-M, and Executive Order 13526. For guidance on classification and handling restrictive markings on discs, refer to DODM 5200.01 volumes 1-4. Downgrading/declassification shall be done in accordance with DODM 5200.01 volumes 1-4. The overall security classification assigned to a publication shall agree with the highest security classification assigned to any portion within.

4.7.22.2 Emergency page markings. When specified by the acquiring activity, emergency pages shall be prepared. Pages containing emergency information shall have a dark border that indicates to the user that they are emergency pages. The border should go to the edge of the page, if the composition system allows it, and should be made up of characters such as large Xs, large asterisks, or large slashes. Refer to FIGURE 6 for examples of emergency page markings.

4.7.22.3 Protective markings. When specified by the acquiring activity, a FOR OFFICIAL USE ONLY (FOUO) protectively marked TM shall be prepared. Any TM marked as FOUO shall have each page and paragraph containing FOUO information marked as such. Refer to DODM 5200.01 volumes 1-4 for specific requirements on using the FOUO protective marking.

4.7.23 Referencing.

4.7.23.1 Other documents **<extref>**. Reference shall be made only to other documents that are authorized to the user and which are available through normal publications channels such as Army Publishing Directorate, Media Distribution Division, St. Louis, MO, or a post library. For Government specifications and standards, reference shall be made to the basic publication number. For non-Government documents, reference shall be made by the publication number. References to pending publication actions shall not be made.

Source: https://assist.dla.mil -- Downloaded: 2016-12-09T23:24Z
Check the source to verify that this is the current version before use.

4.7.23.2 Within the TM **<xref>**. Reference within a work package shall be to the appropriate maintenance task title, procedure title, step number, figure number or table number, etc. References to other work packages shall include the work package sequence number in the reference (e.g., WP 0125, etc.). The work package sequence number shall appear before the reference title or number.

4.7.23.2.1.1 TM divisions. References to any major division of the manual shall be made by name (e.g., volume 5, chapter 6, table of contents, glossary, index, etc.) or by abbreviation (e.g., vol 5, chap 6, TOC, etc.).

4.7.23.2.1.2 Volumes. References to information in another volume within the TM shall include the volume number.

4.7.23.2.1.3 Maintenance tasks, procedures, and paragraphs. Reference to maintenance tasks, procedures, and paragraphs shall be by work package sequence number and reference to title, as necessary (e.g., WP 0025, Disassembly or WP 0012, Equipment Data).

4.7.23.3 Equipment, components, and parts. References to parts of the equipment and to equipment components may be made by nomenclature, model, type, reference designator, or figure and item number, as applicable. References shall be made only to models or types of equipment covered by the TM.

4.7.23.4 National Stock Numbers (NSNs) and Part Numbers (P/Ns). Reference to NSNs or P/Ns shall be made only in tables, other tabular material, and lists. Reference to NSNs or P/Ns shall not be made in the narrative portions of the TM such as procedural steps, initial setups, illustrations, or legends, except when essential for identification or otherwise allowed by the standard. NSN and P/N information for all equipment, components, and parts shall be accessible at any point in the presentation of work package text, tables, and illustrations via links (references in -2) to work packages containing the NSN and P/N information.

4.7.23.5 Equipment panel markings (placarding). Reference shall be made to panel markings and switch positions exactly as marked on the equipment. However, symbols on panel markings shall be spelled out when they cannot be produced by the software, composing equipment, or printers used in producing the manual, such as the symbol for ohm, infinity, etc.

4.7.23.6 Metric and United States (U.S.) standard measurements. Unless specified otherwise by the acquiring activity, all measurements shall be expressed in both U.S. standard units (e.g., ounces, pounds, gallons, inches, feet, knots, miles, etc.) and metric units (e.g., grams, kilograms, liters, centimeters, kilometers per hour, kilometers, etc.). U.S. standard measurements shall be followed by the metric conversion in parentheses unless the equipment, instrument, or tool, etc., is calibrated in metric units. In that case, metric units shall be first, followed by the U.S. standard units (e.g., "169.5 N•m (125 lb-ft)").

4.7.23.7 Temperature. Reference shall be made to temperature readings as calibrated on the equipment. If other than Fahrenheit, the equivalent in Fahrenheit shall follow in parentheses. General temperature references, such as room temperature, shall be given in degrees Fahrenheit (e.g., 78°F).

Source: https://assist.dla.mil -- Downloaded: 2016-12-09T23:24Z
Check the source to verify that this is the current version before use.

4.7.23.8 Tables. References shall be made to tables within a work package by table number (e.g., Table 2). References shall be made to tables in a different work package by work package sequence number and table number (for example, WP 0012, Table 2). References shall be made only to tables within the same manual or another volume of the same manual.

4.7.23.9 Figures and multisheet figures. References shall be made to figures within a work package by figure number (for example, Figure 2) and the sheet number for multisheet illustrations, when applicable (e.g., Figure 17, Sheet 1). References shall be made to figures in a different work package by work package sequence number and figure number (for example, WP 0012, Figure 2). References shall be made only to figures within the same manual or another volume of the same manual.

4.7.23.10 Index numbers. For figures where index numbers are used to identify parts, figure and index numbers shall be used in text to identify items and parts on illustrations. For example:

"Remove safety disc (Figure 1, Item 3) and safety disc washer (Figure 1, Item 4) from valve body (Figure 1, Item 2)."

4.7.23.11 Nomenclature callouts. For figures where nomenclature callouts are used, reference to those callouts with the text shall be by figure only and the nomenclature in the text shall match the nomenclature in the figure. For example:

"Remove safety disc (Figure 1) and safety disc washer (Figure 1) from valve body (Figure 1)"

4.7.23.12 Items on diagrams. References shall be made to parts on diagrams by sufficient description or reference designator to identify the item (e.g., resistor A6R11).

4.7.23.13 Footnotes. References shall be made to footnotes when essential for explanation, comments, or other information. Testing procedures shall not contain footnotes.

4.7.23.14 Repeating information. Repeating information shall be allowed to ensure the work package information is complete. Information, two pages or less may be repeated; information more than two pages shall be referenced.

4.7.24 Equations. The use of equations shall be held to the minimum use required by the needs of the TM user.

4.7.25 Nomenclature.

4.7.25.1 Nomenclature consistency and applicability. Nomenclature, other terms, and names shall be consistent within a manual and throughout the RPSTL, MAC, and other directly related manuals. Statements that explain applicability for individual items of equipment shall use specific serial numbers, block designations, model designations, or similar identification. Such terms as "on later equipment" and "on early serial numbers" shall not be used.

Source: https://assist.dla.mil -- Downloaded: 2016-12-09T23:24Z
Check the source to verify that this is the current version before use.

4.7.25.2 Official/approved nomenclature. Unless specified otherwise by the acquiring activity, only approved names and official nomenclature shall be used. Official nomenclature shall be the nomenclature used in the FEDLOG H6 listing (https://www.dlis.dla.mil/h6/search.aspx). If the acquiring activity approves unofficial nomenclature (common name), an appropriate nomenclature cross-reference list shall be prepared for the TM and placed in the general information work package. (Refer to B.5.2.) Shortened versions of the approved nomenclature are not considered deviations. Approved nomenclature shall be used wherever the use of a common name might be ambiguous.

4.7.25.3 Military terms. Military terms used shall be in accordance with Joint Pub 1-02 or any approved dictionary or glossary of Army military terms.

4.7.25.4 Automatic electronic test and checkout terminology. Terms used for automatic electronic test and checkout shall be in accordance with MIL-STD-1309.

4.7.26 Comprehensibility. TMs shall be written for the target audience. Reading Grade Level (RGL) shall be as specified by the acquiring activity. Refer to MIL-HDBK-1222 for guidance on calculating the RGL for TMs.

4.7.27 Graphics.

4.7.27.1 Graphic format. Graphics format shall be as specified by the acquiring activity. Graphics formats chosen shall be editable by the author/developer/TM proponent. Graphics shall be obtained in the format they were created in as well as any they are exported to for use in the TM. Graphics shall be resizable. Additional information regarding graphics format is provided in MIL-HDBK-1222.

4.7.27.2 Types of graphics. As applicable, the following types of graphics shall be used in the preparation of TMs. Line drawings are the preferred type of graphic. Preferred format of these graphics and typical examples are provided in MIL-HDBK-1222.

a. Line drawings.
b. Photographs.
c. Engineering drawings.
d. Diagrams.
e. Charts and graphs.
f. Tools and test equipment illustrations.

4.7.27.2.1 Line drawings. Line drawings including exploded views, locator views, and detailed views shall be used to support the operational, troubleshooting, and maintenance procedures. Examples of line drawings are provided in MIL-HDBK-1222.

a. When index numbers are used to locate and identify equipment components or parts, they shall be used as specified in 4.7.27.3.4.1.
b. To assist the maintenance technician or operator in locating major components, controls and indicators, etc., locator views may be included.
c. When the illustration does not adequately or clearly depict the subject matter or part(s), specific detailed views may be included to support the main illustration.

Source: https://assist.dla.mil -- Downloaded: 2016-12-09T23:24Z
Check the source to verify that this is the current version before use.

4.7.27.2.2 Multiview and multisheet illustrations. Multiview and multisheet illustrations may be used to clarify, identify significant features, or further detail equipment assemblies, subassemblies, and detailed parts. Refer to MIL-HDBK-1222 for examples of multiview and multisheet illustrations.

4.7.27.2.3 Photographs. Photographs, film or digital, may be used for illustrations when a photograph provides for better clarity than a line drawing. All photographs, regardless of source, shall be delivered as digital photographs. The acquiring activity shall determine acceptability of photographs and usage of line drawings.

4.7.27.2.3.1 Photograph quality. If used, photographs shall be detailed and sharp, free of heavy shadows, distorted objects, cluttered foregrounds and backgrounds, and of good contrast. Photographs shall provide sufficient detail for the user to clearly identify all components.

4.7.27.2.3.2 Retouching. Photographic retouching shall be held to a minimum. Retouching shall be used only to emphasize detail, exclude unwanted detail, correct slight photographic defects, and eliminate undesirable shadow from that portion of the photograph related to the text only.

4.7.27.2.3.3 Use of photographs in place of line drawings. For photographs that cannot meet the requirements specified previously, line drawings shall be prepared and used. Photographs may be used in place of line drawings. Photographs and line art may appear in the same figure

4.7.27.2.4 Engineering drawings (**NMWR/DMWR only**). Engineering drawings may be used with the approval of the acquiring activity. Engineering drawings are controlled documents, and when used, they shall be used in their entirety, without modification. They shall be reduced or redrawn to meet page size restrictions. When the controlled elements of an engineering drawing (e.g., title block, sources of supply, revision data, etc.) are removed, leaving only the "field" of the drawing, it shall be treated as a typical line drawing.

4.7.27.2.5 Diagrams.

4.7.27.2.5.1 Diagram specifications. Diagrams shall be prepared in accordance with the following specifications and shall include legends or keys that explain symbols used.

TABLE III. Diagram specifications.

Subject	Equipment Covered	Specification
Abbreviations	All	ASME Y14.38, JP 1-02, and https://www.rmda.army.mil/abbreviation/
Engineering Drawing	All	ASME Y14.100
Graphic Symbols	Electrical and Electronic	IEEE Std 315a, IEEE Std 280
	Mechanical	ASTM-F856
	Digital (Logic)	IEEE Std 91
	Fluid Power	ISO 1219-1 ISO 1219-2
Unit Symbols	All	IEEE Std 260.1
Logic	All	IEEE Std 91

Source: https://assist.dla.mil -- Downloaded: 2016-12-09T23:24Z
Check the source to verify that this is the current version before use.

4.7.27.2.5.2 Types of diagrams. The following types of diagrams may be included in the TM. Refer to MIL-HDBK-1222 for examples of types of diagrams.

a. Block diagrams.
b. Schematic diagrams.
c. Pictorial diagrams.
d. Cutaway diagrams.
e. Wiring diagrams/wire lists.
f. Cable diagrams.
g. Piping diagrams.
h. Test setup diagrams.

4.7.27.2.6 Charts and graphs. Charts and graphs shall be prepared as illustrations. Instructions shall be provided for use and interpretation of complex graphs.

4.7.27.2.7 Tools and test equipment illustrations. Only uncommon or unusual uses and connections for test purposes shall be illustrated if they are essential to avoid misunderstanding. Unusual operations shall also be illustrated. Special tools and test equipment shall be illustrated, as applicable. Standard tools and test equipment shall not be illustrated nor shall self-evident or generally known uses be shown. Connections for test purposes shall be illustrated to prevent misunderstanding

4.7.27.3 Elements of illustrations.

4.7.27.3.1 Border rules and boxes. Border rules and boxes shall not be used for single illustrations, but are used to separate multi-section illustrations on the same page or for locator/detail views. Refer to MIL-HDBK-1222 for an example of border rules and boxes.

4.7.27.3.2 Use of the human figure. When necessary, illustrations may include parts of the human body such as a hand, arm, leg or foot. The human figure shall not contain any information that can identify the person including a face, rank insignia, identification numbers, unit/company/brigade patches, medals/wings, etc. Jewelry shall not appear in any illustration. The human figure shall not be permitted to obscure details of the equipment necessary for a complete understanding of its operation. The human figure shall be clothed as designated by the acquiring activity. A cross section of races and sexes shall be used.

4.7.27.3.3 Credit lines. No credit lines shall be included on graphics.

4.7.27.3.4 Callouts. Index numbers, reference designators or nomenclature shall be used to identify specific parts of an illustration. Both index numbers and nomenclature can be used in the same document. However, they shall not be used together in the same illustration. Refer to MIL-HDBK-1222 for further guidance on the use of index numbers versus nomenclature callouts.

4.7.27.3.4.1 Index numbers. Index numbers shall start with Arabic numeral 1 and continue consecutively within an illustration. For multisheet illustrations, index numbers shall continue in sequence from one sheet to another.

a. Index numbers shall be presented in one of the following manners:
   (1) In clockwise sequence, beginning at 11 o'clock. Refer to MIL-HDBK-1222 for example of callouts starting at 11 o'clock. This is the preferred method.

Source: https://assist.dla.mil -- Downloaded: 2016-12-09T23:24Z
Check the source to verify that this is the current version before use.

(2) In inspection or disassembly/assembly order.

(3) In the order mentioned in the text.

b. Within a multisheet illustration, if an item that already has been assigned an index number is used in more than one illustration in that multisheet illustration, it shall retain the same index number.

c. All items shown as exploded shall be identified. Items drawn in phantom need not be identified.

d. Index numbers shall not be contained within a shape of any kind (e.g., circle, square, triangle, etc.

4.7.27.3.4.2 Leader lines and arrowheads. Leader lines shall be uniform, short, and as straight as possible; avoid the use of dogleg-shaped lines unless absolutely necessary. Arrowheads may be added for clarity. Do not allow leader lines to touch the callout. Do not allow arrowheads to enter the object to which they apply. If it is necessary to enter the object to provide for greater clarity, a breakoff symbol shall be used in lieu of an arrowhead.

4.7.27.3.5 Illustration legends. When necessary for clarity, legends shall be prepared to identify index numbers on illustrations. Legends shall not be a part of the illustration and shall be placed in the text area. Examples of legends are provided in MIL-HDBK-1222.

4.7.27.3.6 Procedures on illustrations. Procedural steps shall not be placed on illustrations.

4.7.27.4 Graphic techniques. In addition to the graphic techniques provided in 4.7.27.4.1 through 4.7.27.4.8, refer to MIL-HDBK-1222 for suggested graphic techniques used for the preparation of TMs.

4.7.27.4.1 Figure numbers. Figure numbers shall be included on all illustrations except inline graphics (e.g., equations). Figures shall be numbered using Arabic numbers sequentially within each work package starting with the Arabic numeral 1. The figure number shall precede the title. The figure number and title shall not be an integral part of the figure. The figure number and title shall be separated from the graphic so the text can have the capability of being searched.

4.7.27.4.2 Repair Parts and Special Tools List (RPSTL) figure numbering. Figures for RPSTL shall be numbered sequentially within the RPSTL (not within each work package) using Arabic numerals beginning with 1. Multisheet RPSTL illustration shall be used as specified by the acquiring activity and shall be numbered as described in this paragraph and in 4.7.27.4.4.

4.7.27.4.3 Foldout figure numbering. Foldout figures shall be numbered in consecutive ascending numerical sequence within each TM, beginning with Arabic number 1 (e.g., FO-1, FO-2, etc.). Figures are numbered in the order of reference in the text. Figure numbers for foldouts shall be placed preceding the figure title under the illustration.

4.7.27.4.4 Multisheet numbering. Multisheet figures shall be consecutively sheet numbered and include the total number of sheets following the title; for example, "Figure 2. Wing Hydraulic Assembly (Sheet 1 of 3)." or "Figure 1. Cable Assembly W12 Wiring Diagram (Sheet 1 of 2)." Remaining sheets shall be numbered in consecutive order; for example, Sheet 2 of x, Sheet 3 of x, etc. (where x is the total number of sheets). A sample multisheet illustration is provided in MIL-HDBK-1222.

4.7.27.4.5 Figure titles. Each figure, except inline graphics (e.g., an equation), shall have a figure title.

Source: https://assist.dla.mil -- Downloaded: 2016-12-09T23:24Z
Check the source to verify that this is the current version before use.

4.7.27.4.5.1 Figure title format. The figure title format shall:

a. Include "Figure" in title case, followed by the figure number, a period, two spaces, and the title (e.g., "Figure 3. Fuel Indicator.").
b. Capitalize the first letter of the first and each major word of the title.
c. End with a period following the last word.
d. Identify illustrations applicable to one service in a joint service TM (e.g., "Figure 3. Fuel Indicator (Army Only).").
e. Identify illustrations applicable to more than one service in a joint service TM (e.g., "Figure 3. Fuel Indicator (Army and Air Force Only).").

4.7.27.4.5.2 Figure title placement. Figure title placement shall:

a. Center the figure title below the graphic
b. Begin the title on the same line with the figure number.
c. When the title is too long to fit on one line, align the second line with the first letter of the title.
d. For figures rotated 90 degrees, refer to MIL-HDBK-1222 for placement of title.

4.7.27.4.6 Illustration identification numbers.

a. Each illustration shall be assigned a unique identification number provided by the proponent activity.
b. The contractor's identification number may be used when approved by the proponent activity.
c. When the identification number is to be printed in the TM, such number shall be approximately 4- to 6-point type and placed in the lower right-hand corner of the illustration (within the graphics area) sufficiently removed to avoid being confused as part of the illustration.

4.7.27.4.7 Portraying signal flow. Signal flow, especially for electrical and electronic equipment, critically affects the understandability of diagrams. To assist the TM user in following the diagram, major signal or pressure flow shall be from left to right, and feedback or return flow shall be from right to left, if possible.

4.7.27.4.8 Use of color. Unless specified otherwise by the acquiring activity, black and shades of black (one color) shall be used for TMs. Prior approval for color will be obtained by the acquiring activity from the Army Publishing Directorate (APD). The acquiring activity will provide written approval, designating color(s) to be used.

4.8 Changes/Revisions. When updates to TMs are ordered, the deliverable product shall be changed pages/work packages or a complete revision of the TM. The acquiring activity will determine the type of update required. When changes/additions/deletions of maintenance tasks are done, the associated MAC should be reviewed and updated as required.

4.8.1 Changes for TMs. A change is used to incorporate appropriate new information (e.g., MAC changes, Modification Work Orders (MWOs), engineering drawing changes, DA Forms 2028, etc.) into the basic TM (or previous edition) or clarifies, corrects, or improves existing information in the TM. The change will be written in the same style and format as the basic manual.

Source: https://assist.dla.mil -- Downloaded: 2016-12-09T23:24Z
Check the source to verify that this is the current version before use.

4.8.1.1 Changes. Changes shall consist of a change transmittal page and the applicable change pages and/or work packages. Refer to 5.2.1.5 for content and format requirements for the change transmittal page.

a. Each change to a TM shall be numbered in sequence beginning with 1.
b. Front matter, work package, and rear matter change pages shall conform to the style and format of the basic TM and shall incorporate all approved information.
c. Changes to front and rear matter pages and all pages of a changed work package shall include the applicable change number located on the outer edge of the page opposite the binding side at the bottom of the page.
d. The Publication Identification Number (PIN) shall be on the last page of the change package.
e. Change date shall appear on the change transmittal page and list of effective pages/work packages.

4.8.1.2 Changed work packages. When updates to a work package are made, the entire work package shall be reissued and included in the TM change package.

4.8.1.3 Changed front and rear matter pages. When updates to the front and rear matter of a TM are required, all pages that share the same page number style (e.g., a-z or i-ix) shall be revised and reissued and included in the TM change package.

4.8.1.4 Change symbols for text and tables. Change symbols shall be inserted to identify technical updates in text and tables as follows:

a. Updates to the text and tables shall be indicated by a vertical bar opposite the updated, deleted, or added text (except as noted in the following items).
b. A change bar shall be placed to the left of the table title only if the table title is changed or a new table is added. A change bar shall be placed to the left of the illustration title only if the illustration title is changed.
c. Change symbols from a previous update shall be deleted when a page is subsequently updated. Symbols shall show current updates only.
d. Change symbols are not required for correction of minor inaccuracies, such as spelling, punctuation, relocation of material, renumbering, etc., unless such correction changes the meaning of the information.
e. If everything in the work package is changed, a vertical bar shall be placed to the left of the work package title in lieu of putting vertical bars next to all the text. Procedural steps or list items whose number/letter changed after adding or deleting material shall not be marked with a vertical bar and shall not be considered changed material.

4.8.1.5 Change symbols for illustrations. Unless specified otherwise by the acquiring activity, a miniature pointing hand may be used for illustrations (other than diagrams and schematics) to highlight the area containing the revised information. Changes shall be indicated as follows:

a. Changes continued to the same general area shall be indicated only once on the illustration.
b. A vertical bar next to changed callouts on illustrations may be used in lieu of a pointing hand.

Source: https://assist.dla.mil -- Downloaded: 2016-12-09T23:24Z
Check the source to verify that this is the current version before use.

c. A vertical bar shall be placed next to the graphic if the miniature pointing hand is not used.

d. As specified by the acquiring activity, screens (shading), screened (shaded) boxes, or miniature pointing hands shall be used to highlight updated areas of diagrams and schematics.

e. If a callout is deleted from an illustration, the word "DELETED" may be placed after the appropriate number in the legend, if applicable. If a callout is deleted from an illustration without a legend, such as those used to supplement a RPSTL, the word "DELETED" may be placed on the illustration at the end of the leader line.

f. When an illustration is changed, index numbers added between existing numbers may be the same as the preceding index number with added alpha characters (e.g., 22A, 22B). This system may also be used in basic manuals when errors are discovered so late in preparation that renumbering of all following index numbers would delay submittal. Index numbers with added alpha characters shall be eliminated for a complete revision.

g. When an illustration contains embedded references to other illustrations or tables (this practice is highly discouraged), the referenced table and illustration numbers shall not be changed. When an illustration or table in the work package is added or deleted before the referenced table or illustration, the use of point illustration or table number is permitted and shall be in accordance with the LPD plan.

4.8.1.6 Changes to Repair Parts and Special Tools List (RPSTL) work packages. Requirements in 4.8.1 through 4.8.1.5 shall apply with the following exceptions:

a. Inserted or deleted figures and items. When figures and items have been inserted or deleted, the cross-reference index work packages shall be changed as necessary.

b. Item changes. Unless specified otherwise by the acquiring activity, an asterisk shall be placed to the left of the item number column in the list adjacent to the line item indicating that an update has been made to the item and is reflected in the associated text, illustration, P/N index, or reference designator index.

c. Deleted work package. When a RPSTL work package is deleted, remaining RPSTL figure numbers shall not be changed to reflect the deleted work package and associated figure until the next revision. Refer to 4.7.9.2.2 for further requirements related to deletion of work packages in a change.

d. Inserted work package. When a RPSTL work package is inserted before the last RPSTL work package, the RPSTL figure number shall have point figure numbers in accordance with the LPD plan (e.g., Insert between Figure 234 and Figure 235 would be Figure 234.1). The remaining RPSTL figure numbers shall not be changed until the next revision.

4.8.2 Complete TM revisions. A complete revision requires rewrite and reorganization of the technical content of the data. All existing changes to the basic manual shall be merged. All change dates and change symbols from previous updates shall be removed. If any work packages were added or deleted, all work packages shall be assigned new work package sequence numbers in consecutive order. If point numbers were added to the work package sequence numbers for expansion during a previous change cycle, they should be recycled to the basic four-digit work package sequence numbers. (e.g., if WP 0034.1 and WP 0034.2 were inserted between WP 0034 and WP 0035, WP 0034.1 would be renumbered 0035, WP 0034.2

Source: https://assist.dla.mil -- Downloaded: 2016-12-09T23:24Z
Check the source to verify that this is the current version before use.

would be renumbered 0036, and WP 0035 should be renumbered 0037). The total number of pages in the work package or other division (e.g., warning summary, TOC, etc.) is counted when determining the total number of pages in the proposed change and applying the following rules:

a. Bound publications. Bound publications shall be revised when a proposed change to a publication would alter 25 percent or more of its printed pages or would alter 50 percent or more of its printed paragraphs. If the publication is eight or fewer pages, it shall always be revised.

b. Loose-leaf publications. Loose-leaf publications, which have 32 or fewer printed pages including changes, shall be revised when a proposed change would replace 50 percent or more of those pages. Loose-leaf publications, which have more than 32 printed pages including changes, shall be revised when a proposed change would replace 75 percent or more of those pages.

5. DETAILED REQUIREMENTS.

5.1 Technical content preparation. TM data developed in accordance with this standard shall be task oriented and fully consistent with the maintenance concepts derived from the baseline documents described in the following:

a. Logistics Product Data (LPD). The technical data and instructions developed by the requirements of LPD, along with the DOD Requirements for LPD (including the MAC), shall be used as the baseline to prepare TMs.

b. Maintenance Allocation Chart (MAC). For equipment that does not have LPD available, either a Preliminary Maintenance Allocation Chart (PMAC) or a MAC shall be used as the baseline to prepare TMs.

c. Additional source data. The following source data shall be used in the preparation of specific instructions and the development of specific supporting illustrations: Engineering drawings, sound engineering principles and techniques, available engineering analyses, service experience, performance data on the item and on similar items, and all other Reliability, Maintainability, Supportability (RMS) and Operational Availability (Ao) data.

5.2 Preparation of front and rear matter. Requirements for the preparation of front and rear matter necessary to supplement the technical content chapters and associated work packages in APPENDIX B through N are provided in 5.2.1 and 5.2.2. APPENDIX A provides detailed content and assembly requirements for all TMs covering operation, maintenance, and parts information, at all maintenance levels/classes through depot that shall be tailored to meet system and user requirements.

5.2.1 Front matter **<paper.frnt>**. As applicable, material preceding the first text page shall consist of the following in the order specified in the following:

a. Front cover **<frntcover>** or abbreviated front cover **<frntcover_abbreviated>**. (Refer to 5.2.1.1 or 5.2.1.2.)

b. (MC) Promulgation letter **<promulgation>**, if applicable. (Refer to 5.2.1.3.)

c. Warning summary **<warnsum>.** (Refer to 5.2.1.4.)

d. Change transmittal page **<chgsheet>**, if applicable. (Refer to 5.2.1.5.)

e. List of effective pages/work packages **<loepwp>**. (Refer to 5.2.1.6.)

Source: https://assist.dla.mil -- Downloaded: 2016-12-09T23:24Z
Check the source to verify that this is the current version before use.

f. Title page **<titleblk>.** (Refer to 5.2.1.7.)

g. Table of contents **<contents>** (Refer to 5.2.1.9.)

h. "How To Use This Manual" information **<howtouse>.** (Refer to 5.2.1.10.)

5.2.1.1 Front cover **<frntcover>**. A front cover shall be prepared for each TM and DMWR/NMWR. NSN(s) and EIC(s) shall be included on the front cover for equipment publications but are not required for publications such as general maintenance and software manuals. The formats of the front covers are shown in FIGURE 7 (TM), FIGURE 8 (phased maintenance and preventive maintenance services TMs), FIGURE 9 (DMWR) and FIGURE 10 (DMWR with national overhaul standards), FIGURE 11 (NMWR with national overhaul standards), FIGURE 12 (TM with national overhaul standards), and FIGURE 13 (MC only manual). The front cover for Marine Corps only manuals (FIGURE 13) shall be used only for Marine Corps only manuals or for joint service manuals where the Marine Corps is the lead service. For joint service manuals where Army is the lead service, the Army cover shall be used. Unless otherwise specified, the front cover shall contain the following content information in the order listed. Supersedure notice, destruction notice, and general purpose notices may be placed on the inside front cover if necessary. All other information shall remain on the front cover. Cover illustrations shall only be used if space permits after all required information is placed on the cover and shall be used for pocket-sized manuals only if the illustration will not cause information to be pushed to the inside front cover. Additional detailed requirements for the front cover content information are described in 5.2.1.1.1 through 5.2.1.1.14.

a. Security classification (when required).

b. Publication number single service **<tmno>** or joint service **<tminfono>.** (Refer to 5.2.1.1.1.)

c. (MC) Publication Control Number (PCN). (Refer to 5.2.1.1.2.)

d. National overhaul standards statement (TMs/DMWRs/NMWRs with national overhaul standards only). (Refer to 5.2.1.1.3.)

e. Publication title **<prtitle>**. (Refer to 5.2.1.1.4.)

   (1) Title from Appendix A, Table A-I.

   (2) System or item nomenclature **<name>**.

   (3) As a minimum the NSN and EIC shall be included. The model number and/or part number may also be included. The information shall be in the order specified below. This group may be repeated to present all variations covered in the publication.

      (a) Model number **<modelno>**. (Refer to 5.2.1.1.4.1.)

      (b) National Stock Number (NSN) **<nsn>**. (Refer to 5.2.1.1.4.2) (Required).

      (c) Part number **<partno>**. (Refer to 5.2.1.1.4.3.)

      (d) End Item Code (EIC) **<eic>**, as specified in the Army Master Data File (AMDF). (Refer to 5.2.1.1.4.4.)

f. Subtitle (when required) **<stitle>**.

g. Weapon system name (when required) **<weapons_system>.** (Refer to 5.2.1.1.5.)

h. Equipment illustration (when required) **<graphic>**. (Refer to 5.2.1.1.6.)

Source: https://assist.dla.mil -- Downloaded: 2016-12-09T23:24Z
Check the source to verify that this is the current version before use.

i. Availability statement **<avail>** (**DMWR/NMWR only**). (Refer to 5.2.1.1.7.)

j. Supersedure notice (for revisions only) **<super>.** (Refer to 5.2.1.1.8.)

k. Distribution statement **<dist>.** (Refer to 5.2.1.1.9.)

l. Export control notice warning (when required) **<export>.** (Refer to 5.2.1.1.10.)

m. Destruction notice (when required) **<destr>.** (Refer to 5.2.1.1.11.)

n. General purpose notices (when specified) **<general_purpose_notices>.** (Refer to 5.2.1.1.12.)

o. Service nomenclature **<servnomen>.** (Refer to 5.2.1.1.13.)

p. Publication date **<date>.** (Refer to 5.2.1.1.14.)

5.2.1.1.1 TM number for joint service TMs **<tminfono>**. If the manual is jointly used, each service's number shall be placed on the front cover and title page; however, only the proponent activity's TM number shall be placed on each page within the TM. The numbers shall be prefixed with the word Air Force, Army, Marine Corps, or Navy (NAVSEA or NAVAIR), as applicable. The acquiring activity's (proponent activity's) name **<servbranch>** and manual number **<tmno>** shall be placed first. The TM number(s) for the other services shall be in alphabetical sequence following the acquiring activity's name and manual number. For example,

"ARMY	TM 11-1510-204-24
AIR FORCE	TO 21M-LGM30G-12
MARINE CORPS	TM 12345A-15/1
NAVY (NAVAIR)	AI-F18AA-WRM-070
NAVY (NAVSEA)	SE211-FA-MMA-010/SPS-10A"

5.2.1.1.2 (MC) Publication control number (PCN). A publication control number shall be placed beneath the publication number(s) for Marine Corps only manuals and for joint service manuals involving the Marine Corps.

5.2.1.1.3 National overhaul standards statement **(TMs/DMWRs/NMWRs with national overhaul standards only)**. The following shall be added to the title of NMWRs/DMWRs/TMs which document national overhaul standards for the National Maintenance Program: "Containing National Overhaul standards for" (refer to FIGURE 10, FIGURE 11, and FIGURE 12 for examples).

5.2.1.1.4 Publication title **<prtitle>**. The publication title shall be as specified in Table A-I in APPENDIX A. The system name shall consist of the system or item official nomenclature **<name>**, NSN **<nsn>**, end item code **<eic>**, model number **<modelno>**, and part number **<partno>** as described below:

5.2.1.1.4.1 Model number **<modelno>**. When available, the assigned model number shall be included.

5.2.1.1.4.2 National stock number **<nsn>** (Required). The assigned national stock number shall be included. If one is not assigned or is not available, enter "NA" for the NSN.

5.2.1.1.4.3 Part number **<partno>**. When available, the item’s part number shall be included.

Source: https://assist.dla.mil -- Downloaded: 2016-12-09T23:24Z
Check the source to verify that this is the current version before use.

5.2.1.1.4.4 End item code **<eic>**. When available, the item's end item code shall be included. If the item covered by the manual is not an end item or an EIC is not available, enter "NA" for the EIC.

5.2.1.1.5 Weapon system name **<weapons_system>**. When required, the name of the weapon system to which this publication applies shall be included.

5.2.1.1.6 Equipment illustration **<graphic>**. When prescribed by the acquiring activity, the front cover shall include an illustration depicting the item or system if space permits.

5.2.1.1.7 Availability statement **(DMWR/NMWR only) <avail>**. For DMWRs/NMWRs only, the front cover shall contain the following availability statement (italicized text within parentheses shall be replaced with the appropriate information):

> "This publication is not available through the St. Louis Media Distribution Division. This publication is available through (*insert the name and address of the proponent activity*)."

5.2.1.1.8 Supersedure notice for revisions only **<super>**. When a TM is revised, a supersedure notice shall be included on the front cover and on the title page. The supersedure notice shall have the words "SUPERSEDURE NOTICE" underlined preceding the body of the notice. When a new TM is prepared that will replace existing manual(s), a supersedure notice shall be included on the front cover and title page. Refer to MIL-HDBK-1222 for examples of wording for supersedure notices. Refer to FIGURES 7 and 8 for examples of format and placement of supersedure notice.

5.2.1.1.9 Distribution statement **<dist>**. All TMs, DMWRs, and NMWRs shall have a distribution statement placed on the front cover for each manual or revision. (Refer to FIGURE 7.) The appropriate distribution statement shall be provided by the acquiring activity as selected from DOD Instruction (DODI) 5230.24.

5.2.1.1.10 Export control notice warning **<export>**. For those publications with export controlled data, the export control label contained in DODI 5230.24 shall be included.

5.2.1.1.11 Destruction notice **<destr>**. All TMs marked with distribution statements "B," "C," "D," "E," "F," or "X" shall be marked with the destruction notice. For classified and unclassified documents, the element **<destr>** within **<notices>** shall contain the following text (Refer to FIGURE 7.):

"For classified documents, follow the procedures in DOD 5220.22-M, National Industrial Security Program Operating Manual and/or DODM 5200.01, Information Security Program. For unclassified, limited documents, destroy by any method that will prevent disclosure of contents or reconstruction of the document. "

5.2.1.1.12 General purpose notice **<general_purpose_notices>**. When specified by the acquiring activity, additional notice(s) may be included that are not addressed by the notices in 5.2.1.1.8 through 5.2.1.1.11. The notice shall have a title followed by the notice text.

Source: https://assist.dla.mil -- Downloaded: 2016-12-09T23:24Z
Check the source to verify that this is the current version before use.

5.2.1.1.12.1 Hazardous materials information notice. A general purpose notice may be used to indicate review for hazardous materials in accordance with Executive Order 13423 has been completed. This type of general purpose notice for hazardous materials information shall only be used when the review has been completed. Refer to FIGURE 7 for example. Verbiage similar to the following shall be used:

> "**HAZARDOUS MATERIALS INFORMATION**: This document has been reviewed for the presence of HAZARDOUS CHEMICALS AND TOXIC SUBSTANCES as defined by the EPCRA 302 and 313 lists by (*insert command environmental office*). As of the base document, dated (*insert date*), all references to Hazardous Chemicals and Toxic Substances have been removed from this document by substitution with nonhazardous or less hazardous materials where possible."

5.2.1.1.13 Service nomenclature **<servnomen>**. All TMs shall include the service or acquiring activity's nomenclature.

5.2.1.1.14 Publication date **<date>**. The TM publication date shall be the official publication date assigned by the acquiring activity. If the publication is produced in more than one media, the date must be the same on all media. The day, month, and year shall be given in that sequence. (Refer to FIGURE 7.)

5.2.1.1.15 For Army Communications Security (COMSEC) manuals use. Unless otherwise specified by the acquiring activity, unclassified TMs that contain COMSEC materiel shall be marked FOR OFFICIAL USE ONLY or FOUO. The notice shall be placed at the bottom center of the front cover and all TM pages. Classified TMs that contain COMSEC materiel shall be appropriately marked at the level of classification.

5.2.1.2 Abbreviated front cover **<frntcover_abbreviated>**. When required by the content matrix and requirements contained herein, Lubrication Orders (LOs) or Preventive Maintenance Checklists (PMCs) shall contain an abbreviated front cover. The abbreviated front cover shall contain:

a. TM number single service **<tmno>** or joint service **<tminfono>.** (Refer to 5.2.1.1.1.)
b. TM title **<tmtitle>**. (Refer to 5.2.1.1.4.)
c. A reporting of errors block **<reporting>.** (Refer to 5.2.1.7.1.)
d. Those notices **<notices>** as required in 5.2.1.1.7 through 5.2.1.1.11.
e. The service nomenclature **<servnomen>.** (Refer to 5.2.1.1.13.)
f. TM publication date **<date>**. (Refer to 5.2.1.1.14.)

5.2.1.3 (MC) Promulgation letter **<promulgation>**. The promulgation letter shall be included in Marine Corps only publications and any joint service publication with the Marine Corps as the lead service. The promulgation letter shall follow the Marine Corps cover. For joint service publications where Army is the lead service, the promulgation letter shall not be included. The promulgation letter shall be inserted in the publication as a graphic and not as tagged text. Refer to FIGURES 14 through 19 for examples.

Source: https://assist.dla.mil -- Downloaded: 2016-12-09T23:24Z
Check the source to verify that this is the current version before use.

5.2.1.4 Warning summary **<warnsum>**. When required, a warning summary shall be prepared for all TMs containing warnings. The warning summary shall appear on the first right-hand page immediately after the front cover. The warning summary title shall be centered above the warning summary. The warning summary shall include first aid data **<first_aid>** and explanations of all general safety warning icons **<safety>** and hazardous materials icons **<haz-icons>** used in the manual. It shall also include descriptions of the general safety warnings **<warninfo>** and hazardous materials warnings **<hazard>** that have major impact throughout the manual. Only warnings that meet these criteria shall be included. Refer to MIL-HDBK-1222 for an example of a warning summary. As applicable, the warning summary shall consist of the following in the order specified:

a. First aid data **<first_aid>.**
b. Warning icons **<safety>.**
c. Warning description **<warninfo>.**
d. Hazardous materials icons **<haz-icons>.**
e. Hazardous materials descriptions **<hazard>.**

5.2.1.4.1 First aid **<first_aid>**. Any first aid data required in the TM, and not explicitly included in a warning, shall be included in the warning summary. The first paragraph of the warning summary shall reference FM 4-25.11. Any additional first aid data not described in FM 4-25.11 shall be described in this section.

5.2.1.5 Change transmittal page **<chgsheet>**. A change transmittal page shall be prepared for each change to a TM and shall be included in the change package. (Refer to FIGURE 20.) The change transmittal page shall not be numbered and shall be located following the warning summary. The change transmittal page shall contain the same title, distribution statement, export control warning (if applicable), and destruction notice (if applicable) as shown on the front cover of the manual. The publication number shall be placed in the top center of the change transmittal page(s). The change transmittal sheet shall list all pages/work packages that have been changed, added, deleted, or superseded. When updates are prepared, the change number and date shall be shown on the change transmittal page. Unless specified otherwise by the acquiring activity, the change date shall be the date at which the material to be included was received (copy freeze date, provided by the acquiring activity).

5.2.1.6 List of effective pages/work packages **<loepwp>**. A list of effective pages/work packages (refer to FIGURE 21 through FIGURE 24) shall be prepared as in accordance with 5.2.1.6.1 through 5.2.1.6.12. The list of effective pages/work packages shall be prepared and transmitted with the original version of the TM and each subsequent change or revision. The list of effective pages/work packages shall immediately follow the warning summary. When included in a change, it shall immediately follow the change transmittal sheet if the warning summary is not included in the change.

5.2.1.6.1 Types of publications. The following types of publications shall have a list of effective pages/work packages:

a. Technical Manuals (TMs).
b. Repair Parts and Special Tools Lists (RPSTLs).
c. Depot Maintenance Work Requirements (DMWRs).

Source: https://assist.dla.mil -- Downloaded: 2016-12-09T23:24Z
Check the source to verify that this is the current version before use.

d. National Maintenance Work Requirements (NMWRs).
e. Preventive Maintenance Services (PMSs) manuals.
f. Preventive Maintenance Inspections (PMIs) manuals.
g. Preventive Maintenance Daily (PMD) manuals.
h. Phased Maintenance (PM) Inspection Checklist.
i. Aircraft troubleshooting manuals.
j. Technical Bulletins (TBs).
k. Battle Damage Assessment and Repair (BDAR).
l. Destruction of Army materiel to prevent enemy use.

5.2.1.6.2 Exempted publications. Unless otherwise specified by the acquiring activity, the following types of publications shall not have a list of effective pages/work packages:

a. Pocket-sized TMs.
b. TMs/TBs less than 8 pages.
c. Lubrication Order (LO).
d. Preventive Maintenance Checklist (PMC).

5.2.1.6.3 Types of pages to be included. The following types of pages shall be included in a list of effective pages/work packages:

a. All front matter pages to include cover, warning summary, title page, table of contents, and how-to-use this manual info. Blank backup pages shall be listed.
b. Chapter title pages. Blank back up pages shall be listed.
c. All work packages with their page counts (including blank pages). Blank pages within the work packages shall not be listed separately on the list of effective pages. Work packages may be grouped together if they are on the same change number (include total page count for all work packages in the group).
d. Glossary pages including blank pages.
e. Index pages including blank pages.
f. Foldout pages.
g. Back cover.

5.2.1.6.4 Exempted pages. The following types of pages shall not be included in a list of effective pages/work packages:

a. Change transmittal page.
b. List of effective pages.
c. DA Forms 2028.
d. Authentication page.

5.2.1.6.5 Supersedure note (**Revisions only**). For revisions, a supersedure note shall be included at the top the list of effective pages/work packages. This note shall be the same as the supersedure notice that appears on the cover and title page of the manual.

Source: https://assist.dla.mil -- Downloaded: 2016-12-09T23:24Z
Check the source to verify that this is the current version before use.

5.2.1.6.6 Dates of issue for original and changes. At the top of the list of effective pages/work packages, the date of the basic manual and the date of each change that appears in the change number column shall be listed. (Refer to FIGURE 22 for sample.)

5.2.1.6.7 Total number of pages statement. The following statement shall be included on the list of effective pages/work packages below the listing of dates and above the page listings:

"**THE TOTAL NUMBER OF PAGES FOR FRONT AND REAR MATTER IS** (*Insert number*) **AND THE TOTAL NUMBER OF WORK PACKAGES IS** (*Insert number*), **CONSISTING OF THE FOLLOWING:**"

5.2.1.6.8 Change numbers. For new publications, the change number is always zero; the list of effective pages/work packages shall have all zeros. Refer to FIGURE 21 for a sample of a new publication list of effective pages. When a change is prepared, the appropriate change number shall be placed in the change number column. Refer to FIGURE 22 for a sample of a change publication list of effective pages. When a publication is revised, the change numbers shall all be changed back to zero. Refer to FIGURE 23 for a sample of a revised publication list of effective pages/work packages.

5.2.1.6.9 Listing the pages. All pages in the book shall be listed except as noted in 5.2.1.6.4. List each work package by number and put the total number of pages in the work package in parentheses next to the work package number. The words "deleted," "added," or "blank" may be placed next to the page numbers when applicable. Refer to FIGURES 21-24 for sample usage of these words.

5.2.1.6.10 Numbering the list of effective pages/work packages. The list of effective pages/work packages shall have a page number "A" for the first page and "B, C, D, etc." for additional pages.

5.2.1.6.11 List of effective pages/work packages for Repair Parts and Special Tools List (RPSTLs). A list of effective pages/work packages for a RPSTL shall be prepared similarly to other manuals. For RPSTLs prepared entirely in work package format, the work package numbers shall be listed.

5.2.1.6.12 Multi-service manuals. For multi-service manuals, the abbreviation of the acquiring service (e.g., USA, USN, USMC, or USAF) shall be placed in the lower right-hand corner on each page of the list of effective pages/work packages. Refer to FIGURE 24 for sample.

5.2.1.7 (A) Title page **<titleblk>**. A title page shall be prepared and follow the list of effective pages/work packages. (Refer to FIGURE 25.) The title page shall include the reporting errors and recommended improvement statement **<reporting>**. When depot level repair parts are included in a lower level RPSTL, the following statement shall be added to the RPSTL title: "(Including Depot Maintenance Repair Parts)." When the publication contains National Overhaul Standards, the title page shall include the National Overhaul Standards Statement in accordance with 5.2.1.1.3. The title page shall contain the same statements as shown on the front cover. RPSTL manuals and narrative manuals which include a RPSTL may have a current as of date on the title page. Refer to FIGURES 26 and 27 for examples. The current as of date, if included, shall appear immediately following the reporting of errors box. (Refer to 5.2.1.7.1.)

Source: https://assist.dla.mil -- Downloaded: 2016-12-09T23:24Z
Check the source to verify that this is the current version before use.

5.2.1.7.1 Reporting errors and recommending improvements statement **<reporting>**. A reporting errors and recommending improvements statement (refer to FIGURE 25) shall appear below the prime title, NSN, EIC, and subtitle (if any) on the title page. The mailing address, email address, and fax number of the responsible proponent shall be inserted in the statement. Additional information may be added as required by the acquiring activity (e.g., how to submit an electronic DA Form 2028 via the Internet).

a. Unclassified/standard TM. Except for classified TMs, over-sized manuals, pocket-sized manuals, and manuals with less than eight pages, the following statement shall precede the table of contents title:

(1) Army only publications. The following statements shall be included (italicized text within parentheses shall be replaced with the appropriate information):

"**REPORTING ERRORS AND RECOMMENDING IMPROVEMENTS**

You can help improve this manual. If you find any mistakes or if you know of a way to improve the procedures, please let us know. Mail your letter or DA Form 2028 (Recommended Changes to Publications and Blank Forms), located in the back of this manual directly to: (*name and address of proponent*). You may also send in your recommended changes via electronic mail or by fax. Our fax number is (*insert DSN and commercial number of proponent*). Our email address is (*insert address of proponent*). You may also submit your recommended changes at the following Web site (*insert appropriate URL*) A reply will be furnished to you."

(2) Multi-service publications. The following statements shall be included only for multi-service technical publication and use only applicable services (e.g., if the Navy does not use the publication, do not include the statement for that Service) (italicized text within parentheses shall be replaced with the appropriate information, include only those services using the TM.):

"**REPORTING ERRORS AND RECOMMENDING IMPROVEMENTS**

You can help improve this manual. If you find any mistakes or if you know of a way to improve the procedures, please let us know. Reports, as applicable by the requiring service, should be submitted as follows:

(a) (A) Army - Mail your letter or DA Form 2028 (Recommended Changes to Publications and Blank Forms), located in the back of this manual directly to: (*name and address of proponent*). You may also send in your recommended changes via electronic mail or by fax. Our fax number is (*insert DSN and commercial number of proponent*). Our email address is (*insert address of proponent*). You may also submit your recommended changes at the following Web site (*insert appropriate URL*)

(b) (MC) Marine Corps - Submit notice of discrepancies or suggested changes on a NAVMC 10772. For instructions on how to submit go to https://www.marcorsyscom.marines.mil/ProfessionalStaff/AcquisitionLogisticsProductSupport.aspx. Problems or questions regarding the NAVMC 10772 program should be reported by calling DSN 567-6439 or DSN 567-5-17 (Commercial numbers are (229) 639-6439 or (229) 639-5017)."

Source: https://assist.dla.mil -- Downloaded: 2016-12-09T23:24Z
Check the source to verify that this is the current version before use.

(c) (N) Navy - By letter directly to (*name and address of proponent*). You may also send in your recommended changes via electronic mail or by fax. Our fax number is (*insert DSN and commercial number of proponent*). Our email address is (*insert address of proponent*).

(d) (F) Air Force - By Air Force AFTO Form 22 directly to (*name and address of proponent*). You may also send in your recommended changes via electronic mail or by fax. Our fax number is (*insert DSN and commercial number of proponent*). Our email address is (*insert address of proponent*).

(e) A reply will be furnished to you."

b. Pocket-sized manuals, over-sized manuals, and manuals with less than eight pages. For pocket-sized manuals, over-sized manuals, and manuals with less than eight pages, the following statement shall precede the table of contents title.

(1) Army only publications. The following statements shall be included (italicized text within parentheses shall be replaced with the appropriate information):

"**REPORTING ERRORS AND RECOMMENDING IMPROVEMENTS**

You can help improve this manual. If you find any mistakes or if you know of a way to improve the procedures, please let us know. Mail your letter or DA Form 2028, Recommended Changes to Publications and Blank Forms, directly to: (*name and address of proponent*). You may also send in your recommended changes via electronic mail or by fax. Our fax number is (*insert DSN and commercial number of proponent*). Our email address is (*insert address of proponent*). A reply will be furnished to you."

(2) Marine only publications. The following statements shall be included (italicized text within parentheses shall be replaced with the appropriate information):

"**REPORTING ERRORS AND RECOMMENDING IMPROVEMENTS**

You can help improve this manual. If you find any mistakes or if you know of a way to improve the procedures, please let us know. Submit by NAVMC Form 10772 directly to (*name and address of proponent*). You may also send in your recommended changes via electronic mail or by fax. Our fax number is (*insert DSN and commercial number of proponent*). Our email address is (*insert address of proponent*). A reply will be furnished to you."

(3) Multi-service publications. The following statements shall be included only for multi-service technical publication and use only applicable services (e.g., if the Navy does not use the publication, do not include a statement for that Service) (italicized text within parentheses shall be replaced with the appropriate information):

"**REPORTING ERRORS AND RECOMMENDING IMPROVEMENTS**

You can help improve this manual. If you find any mistakes or if you know of a way to improve the procedures, please let us know. Reports, as applicable by the requiring Service, should be submitted as follows:

Source: https://assist.dla.mil -- Downloaded: 2016-12-09T23:24Z
Check the source to verify that this is the current version before use.

(a) (A) Army - Mail your letter or DA Form 2028, Recommended Changes to Publications and Blank Forms, directly to: (name and address of proponent). You may also send in your recommended changes via electronic mail or by fax. Our fax number is (insert DSN and commercial number of proponent). Our email address is (insert address of proponent).

(b) (MC) Marine Corps - By NAVMC Form 10772 directly to (name and address of proponent). You may also send in your recommended changes via electronic mail or by fax. Our fax number is (insert DSN and commercial number of proponent). Our email address is (insert address of proponent).

(c) (N) Navy - By letter directly to (name and address of proponent). You may also send in your recommended changes via electronic mail or by fax. Our fax number is (insert DSN and commercial number of proponent). Our email address is (insert address of proponent).

(d) (F) Air Force - By Air Force AFTO Form 22 directly to (name and address of proponent). You may also send in your recommended changes via electronic mail or by fax. Our fax number is (insert DSN and commercial number of proponent). Our email address is (insert address of proponent).

(e) A reply will be furnished to you."

c. Classified TMs. For classified TMs, the following statement shall precede the table of contents title (italicized text within parentheses shall be replaced with the appropriate information):

(1) Army or Marine TM. The following statements shall be included:

"**REPORTING ERRORS AND RECOMMENDING IMPROVEMENTS**

You can help improve this manual. If you find any mistakes or if you know of a way to improve this manual, write and tell us about it. Address your correspondence to (*name and address of proponent*). When dealing with classified information, make sure that your correspondence is properly marked and is handled in accordance with current security regulations."

(2) Multi-service TM. The following statements shall be included only for multi-service technical publication and use only applicable services (e.g., if the Navy does not use the publication, do not include a statement for that Service):

"**REPORTING ERRORS AND RECOMMENDING IMPROVEMENTS**

You can help improve this manual. If you find any mistakes or if you know of a way to improve this manual, write and tell us about it. Service, should be submitted as follows:

(a) (A) Army - Address your correspondence to (*name and address of proponent*).

(b) (MC) Marine Corps - Address your correspondence to (*name and address of proponent*).

(c) (N) Navy - Address your correspondence to (*name and address of proponent*).

(d) (F) Air Force - Address your correspondence to (*name and address of proponent*).

Source: https://assist.dla.mil -- Downloaded: 2016-12-09T23:24Z
Check the source to verify that this is the current version before use.

When dealing with classified information, make sure that your correspondence is properly marked and is handled in accordance with current security regulations."

5.2.1.8 Preventive maintenance services and phased maintenance inspection manuals title page with warning data **(Aviation only)**. For preventive maintenance services and phased maintenance inspection only, the warning data page shall include the reporting errors and recommending improvement statement and the following additional verbatim statement (refer to FIGURE 28):

"**WARNING**

Certain inspections are Mandatory Safety-of-Flight requirements, and the inspection intervals cannot be exceeded. In the event these inspections cannot be accomplished at the specified interval, the aircraft condition status symbol will be changed to a red X. Mandatory Safety-of-Flight inspection items are printed in bold face type.

NOTE

Inspection items contained in this manual are considered the minimum requirements for performing phased maintenance and must be performed. The cumulative effects of inspection deferrals are unknown and could result in catastrophic failure or increased maintenance at a later date. Therefore, the use of special lettering to emphasize Mandatory Safety-of-Flight Items is not to be construed as authority for deferral of other inspections."

5.2.1.9 Table of contents **<contents>**. A table of contents listing all chapters and work packages shall be prepared for all TMs, DMWRs, and NMWRs. They shall have the exact same title and shall be listed in the same order they appear in the TM. For work packages, page number is optional. The how-to-use this manual information shall be listed on the table of contents including page number. The warning summary shall not be listed on the table of contents. The content and format of the table of contents is shown in FIGURES 29 & 30. The table of contents shall begin on the first available page following the title page and shall be as described in the following:

a. The security classification, if any, of chapters, work packages, figures, and tables shall be indicated.
b. As specified by the acquiring activity, figures may be listed in the table of contents under the corresponding work package by the figure number and title. Listing of page number of each figure is optional. A RPSTL TM shall not include figures in the table of contents. When a TM includes the parts information chapter, the listing of RPSTL figures is optional. Foldout figures, if included in the TOC, shall be listed after all the work packages along with the other rear matter.
c. As specified by the acquiring activity, tables may be listed in the table of contents under the corresponding work package by the table number and title. Listing of page number of each table is optional.
d. The following requirements are applicable to RPSTL entries (refer to FIGURE 31):

Source: https://assist.dla.mil -- Downloaded: 2016-12-09T23:24Z
Check the source to verify that this is the current version before use.

(1) The RPSTL introduction work package **<introwp>** shall be the first work package listed in the parts information.

(2) Titles of RPSTL work packages, including the Functional Group Codes (FGCs) as applicable, shall be listed by the same nomenclature and in the same sequence in which they appear in the first tabular listing in the work package. The work package sequence number shall be referenced with each work package title. The figure number may be included in the work package title.

(3) When multiple functional groups are under a single RPSTL work package, each functional group tabular list title may be included as a subordinate table of content entry.

(4) NSN, P/N, and (as applicable) reference designator cross-reference indexes shall be listed.

5.2.1.10 "How To Use This Manual" information (Except RPSTLs and DMWRs/NMWRs) **<howtouse>**. How-to-use this manual information shall be prepared for all TMs except pocket-sized manuals. For pocket-sized manuals, the how-to-use this manual information is optional. How-to-use this manual information shall include as applicable:

a. "How to Use This Manual" information shall be located after the table of contents and before the first chapter of the TM. "How to Use This Manual" information shall begin on the page immediately following the table of contents.

b. Information to familiarize the user with special or unusual features of the TM shall be prepared. Coverage shall lead the user through the TM and explain important features of the organization and content. For example, the format is explained; operating, troubleshooting, Preventive Maintenance Checks and Services (PMCS) are explained; and repair, maintenance instructions, and other pertinent information are explained.

c. Any peculiarities in the basic arrangement of the TM shall be described. "How To Use This Manual" information shall not repeat instructions given within the chapters and/or work packages.

d. For all TMs (excluding operator) the "How To Use This Manual" information shall include a reference to the associated RPSTL and an explanation on how to use the RPSTL in conjunction with the manual.

e. For all TMs with a glossary, reference to the glossary shall be made and an explanation of its features and use shall be provided.

f. For troubleshooting, an explanation on how troubleshooting data is presented in the TM shall be included. If applicable, an explanation on how failure symptom indexes and malfunction codes correspond to maintenance operational checks and troubleshooting procedures for individual systems and components shall be included. If necessary, for multi-volume troubleshooting TMs, examples of the troubleshooting process shall be provided to illustrate how specific troubleshooting volumes and work packages are used together to locate and isolate faults.

5.2.1.10.1 International standardization agreements. When specified by the acquiring activity, the "How To Use This Manual" information shall contain the following (italicized text within parentheses shall be replaced with the appropriate information):

Source: https://assist.dla.mil -- Downloaded: 2016-12-09T23:24Z
Check the source to verify that this is the current version before use.

"NOTE

Certain provisions of this technical manual (*identify by chapter, work package, paragraph, or similar manner, if appropriate*) are the subject of international standardization agreement (*insert the ABCA or ASCC standard number; the NATO, STANAG, NETR, or NEPR number; or appropriate documentary reference*). When revision or cancellation of this technical manual is proposed which will modify the international agreement concerned, the Life Cycle Management Command (LCMC) or other publications activity responsible for the publication will take appropriate action through international standardization channels, including departmental standardization offices, to change the agreement or make other appropriate accommodations."

5.2.2 Rear matter **<rear>**. As applicable, material following the last text page shall consist of the following in the order specified:

a. Glossary (RPSTL not required) **<glossary>.** (Refer to 5.2.2.1.)
b. Alphabetical index (when required) (RPSTL not required) **<aindx>**. (Refer to 5.2.2.2.)
c. Reporting errors and recommending improvements DA Forms 2028 **<da2028>.** (Refer to 5.2.2.3.)
d. Authentication page **<authent>**. (Refer to 5.2.2.4.)
e. Foldout pages (when required) (except RPSTL) **<foldsect>.** (Refer to 5.2.2.5.)
f. Back cover **<back>.** (Refer to 5.2.2.6.)

5.2.2.1 Glossary (**Except RPSTL**) **<glossary>**. A glossary shall be prepared for TMs only when the terms are uncommon and are not adequately defined in the text or in the Army, DOD, or standard dictionary. The glossary shall include a list of terms **<term>** followed by definitions **<def>**. The terms shall be listed in alphabetical order. If a glossary is required, it shall begin on a separate, right-hand page and immediately precede the alphabetical index, if any.

5.2.2.2 Alphabetical index (**Except RPSTL**) **<aindx>**. An alphabetical index shall be prepared unless specified otherwise by the acquiring activity and the following shall apply:

a. The index may be an index of work packages only or it may be a detailed index, as applicable.
b. All applicable work package references for each entry shall be indicated, regardless of the type of index being prepared. Page references may be included in a detailed index.
c. The index shall be located at the end of the TM but shall precede the sample DA Form 2028. Indexes shall begin on a separate, right-hand page. (Refer to FIGURE 32)
d. For pocket-sized manuals, an alphabetical index shall not be prepared unless otherwise specified by the acquiring activity.

Source: https://assist.dla.mil -- Downloaded: 2016-12-09T23:24Z
Check the source to verify that this is the current version before use.

5.2.2.3 Reporting errors and recommending improvements Department of the Army (DA) Form 2028 **<da2028>**. Instructions on how to complete and submit an electronic DA Form 2028 may precede the filled out sample of DA Form 2028. One filled-out sample copy of DA Form 2028, provided by the acquiring activity, and a minimum of three blank DA Forms 2028 with the TM number, date, and title shall be included and shall precede the authentication page of every unclassified TM (except for oversize TMs, pocket-sized TMs, TMs with less than eight pages, and LOs). The filled out sample shall include guidelines for completing the form.

5.2.2.4 Authentication page **<authent>**. The authentication page, provided by the acquiring activity, shall be the last printed text page of the TM or if foldout pages are included, the authentication page shall be the last printed text page before the foldout pages. For changes, the authentication block shall be included on the change transmittal sheet(s). The authentication block shall be placed after all of the other information on the change transmittal sheet(s). (Refer to FIGURE 33 (Army) or FIGURE 34 (Joint Services) for examples of authentication blocks.)

5.2.2.5 Foldout pages (**Except RPSTL**) **<foldsect>**. If foldout pages are approved by the acquiring activity, they shall be the last printed material in the manual or volume. Foldout pages shall not be included in a RPSTL.

5.2.2.6 Back cover **<back>**. The outside back cover shall be blank, except for pocket-sized TMs and classified TMs. For pocket-sized TMs, the outside back cover shall include the TM number. For classified TMs, security classification markings shall be included on the back cover. When applicable, a metric conversion table, covering applicable units included in the TM, shall be placed on the inside back cover. The PIN shall be placed in the lower right-hand corner of the back cover (**except for Maintenance/Demilitarization for Ammunition DMWRs**).

5.2.3 Multi-volume manuals. The following shall apply to all multi-volume TMs.

a. The first volume in a multi-volume TM shall contain the following front matter as specified in the applicable supporting paragraph:
   (1) A front cover **<frntcover>.** (Refer to 5.2.1.1.)
   (2) An optional promulgation page **<promulgation>** (MC only) (Refer to 5.2.1.3.)
   (3) A consolidated warning summary **<warnsum>.** (Refer to 5.2.1.4.)
   (4) When required, a change transmittal page **<chgsheet>** (refer to 5.2.1.5) shall be prepared to include only the volume change pages.
   (5) A list of effective pages/work packages **<loepwp>** (refer to 5.2.1.6) for all volumes. Refer to FIGURE 24 for example.
   (6) A title page **<titleblk>.** (Refer to 5.2.1.7.)
   (7) A table of contents **<contents>.** (Refer to 5.2.1.9.) The volume contains a complete table of contents covering the entire set. Entries shall indicate the volume in which the referenced material appears; for example, Operator Instructions, Vol. 1.
   (8) The how-to-use this manual information **<howtouse>.** (Refer to 5.2.1.10.)

b. The remaining volumes in a multi-volume TM shall contain the following front matter as specified in the applicable supporting paragraph:

Source: https://assist.dla.mil -- Downloaded: 2016-12-09T23:24Z
Check the source to verify that this is the current version before use.

(1) A front cover **<frntcover>.** (Refer to 5.2.1.1.)

(2) An optional promulgation page **<promulgation>** (MC only) (Refer to 5.2.1.3.)

(3) A warning summary **<warnsum>.** (Refer to 5.2.1.4.)

(4) When required, a change transmittal page **<chgsheet>** (refer to 5.2.1.5) shall be prepared to include only the volume change pages.

(5) A list of effective pages/work packages **<loepwp>** (refer to 5.2.1.6).

(6) A title page **<titleblk>.** (Refer to 5.2.1.7.)

(7) A table of contents **<contents>.** (Refer to 5.2.1.9.) Each volume shall contain its own table of contents and shall reference companion volumes for the same TM.

c. Changes to multi-volume TMs shall be made independently to each volume. The consolidated elements (e.g., warning summary, list of effective pages/work packages, table of contents, global index) contained in the first volume shall be updated during any change to subsequent volumes.

d. For multi-volume manuals, if an index is included, a global index for all volumes shall be placed at the back of the first volume. (Refer to 5.2.2.2.)

5.2.4 Combined manuals (multiple maintenance classes). The following requirements shall be applied to combined manuals with multiple maintenance classes (e.g., -13, -14, -24, etc.)

5.2.4.1 Front matter. For manuals with multiple maintenance classes, the front matter items (cover, warning summary, table of contents, LOEP, etc.) shall be combined and there shall only be one of each item. They shall not be divided by maintenance class.

5.2.4.2 General information. For manuals with multiple maintenance classes, there shall be one general information work package covering all maintenance classes. General information shall not be divided based on maintenance class.

5.2.4.3 Operating, troubleshooting, and maintenance procedures. When a manual covers multiple maintenance classes, operating, troubleshooting, and maintenance procedures may be grouped by maintenance class (e.g., separate chapter for each level). Refer to MIL-HDBK-1222 for examples of matrixes and TM outlines for manual with multiple levels and for further guidance regarding chapter order and content.

5.2.4.4 Supporting information. The supporting information shall not be divided based on maintenance class. There shall be one combined work package of each type (e.g., one references work package covering all maintenance classes, one COEI covering all classes, one expendable and durable items list work package covering all classes, etc.)

6. NOTES.

(This section contains information of a general or explanatory nature that may be helpful, but is not mandatory.)

6.1 Intended use. MIL-STD-40051-2 prescribes requirements applicable to various types of technical publications, and the revisions for these publications.

6.2 Acquisition requirements. The acquisition document(s) should cite the following:

a. Title, number, and date of this standard.

b. Title, number, and date of MIL-HDBK-1222.

Source: https://assist.dla.mil -- Downloaded: 2016-12-09T23:24Z
Check the source to verify that this is the current version before use.

c. Filled out content selection matrix.

6.3 Tailoring guidance. The acquiring activity in coordination with user representatives should tailor any required options offered herein in accordance with APPENDIX A.

6.4 Subject term (key word) listing. The following terms are to be used to identify the MIL-STD-40051-2 document during retrieval searches:

a. Additional Authorization List (AAL).
b. Basic Issue Items (BII).
c. Basis of Issue (BOI).
d. Components of End Item (COEI).
e. Depot Maintenance Work Requirement (DMWR).
f. Expendable and durable items list.
g. Extensible Markup Language (XML).
h. Illustrations.
i. Introductory information.
j. Maintenance Allocation Chart (MAC).
k. Maintenance instructions.
l. National Maintenance Work Requirement (NMWR).
m. Operator instructions.
n. Quality Assurance (QA).
o. Repair Parts and Special Tools List (RPSTL).
p. Security classification.
q. Supporting information.
r. Theory of operation.
s. Troubleshooting procedures.
t. Work package (WP).
u. Work package identification number.

6.5 Changes from previous issue. The margins of this standard are marked with vertical lines to indicate where changes from the previous issue were made. This was done as a convenience only and the Government assumes no liability whatsoever for any inaccuracies in these notations. Bidders and contractors are cautioned to evaluate the requirements of this document based on the entire content irrespective of the marginal notations and relationships to the last previous issue.

Source: https://assist.dla.mil -- Downloaded: 2016-12-09T23:24Z
Check the source to verify that this is the current version before use.

TM X-XXXX-XXX-XX 0029

MAINTAINER MAINTENANCE
24-VOLT CONNECTOR RECEPTACLE
DISASSEMBLY

INITIAL SETUP:

Tools and Special Tools
Pliers, diagonal cutting (WP 0060, Item 3)
Screwdriver, flat- tip 3/16 – inch (WP 0060, Item 43)
Equipment Condition
24-volt connectors receptacle removed (WP 0038)

DISASSEMBLY

1. Unscrew and pull back bushing retaining nut (Figure 1, Item 1) from shell (Figure 1, Item 4).
2. Using screwdriver, pry off shell (Figure 1, Item 4) from bushing (Figure 1, Item 2).
3. Using pliers, pull out 12 inserts (Figure 1, Item 3) form bushing (Figure 1, Item 2).

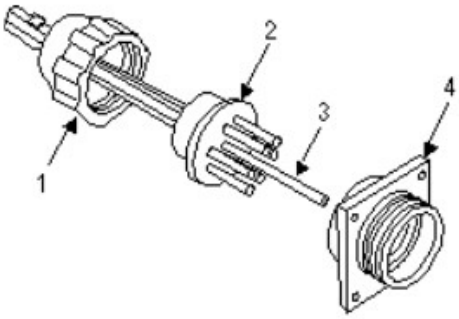

Figure 1. 24-volt Connector Receptacle

END OF WORK PACKAGE

0029-1/BLANK

FIGURE 1. <u>Example of a maintenance work package with one task.</u>

Source: https://assist.dla.mil -- Downloaded: 2016-12-09T23:24Z
Check the source to verify that this is the current version before use.

FIELD MAINTENANCE

VALVE COVER
REMOVAL, INSPECTION, INSTALLATION

INITIAL SETUP:

Tools and Special Tools
Tool Kit, General Mechanic's (Vol. 11, WP 1560, Item 136)
Wrench, Torque, 3/8 in. Drive (0-300 lb-in.) (Vol. 11, WP 1560, Item 165)

Materials/Parts
Cap Set, Protective, Dust and Moisture Seal (Vol. 11, WP 1559, Item 21)
Gasket (1), (Vol. 11, WP 1561, Item 300)
Isolator, Noise (8), (Vol. 11, WP 1561, Item 301)

Personnel Required
Mechanic 91B (1)

Equipment Condition
Engine stopped and cool (TM 9-2355-314-10)
Master Power switch OFF (TM 9-2355-314-10)
Wheels chocked (TM 9-2355-314-10)
Battery disconnect switches off (TM 9-2355-314-10)
Hood raised and secured (TM 9-2355-314-10)
Surge tank removed (WP 0698)
Engine crankcase breather removed (WP 0611)
Engine outlet cooling tube removed (WP 0710)

WARNING

Contact with a live electrical circuit could cause burns or other severe injury. Never work on electrical system without toggling Master Power switch OFF. Toggle battery disconnect switches off before working under hood or on vehicle electrical system. Remove all jewelry before conducting maintenance. Do not wear watches, rings, identification tags or other jewelry which could short across electrical components or catch on vehicle components. Failure to comply may result in injury or death to personnel.

REMOVAL

NOTE

Cap all lines and fittings when removed.

1. Disconnect turbocharger air supply line (Figure 1, Item 2) from variable geometry turbocharger actuator (Figure 1, Item 1).

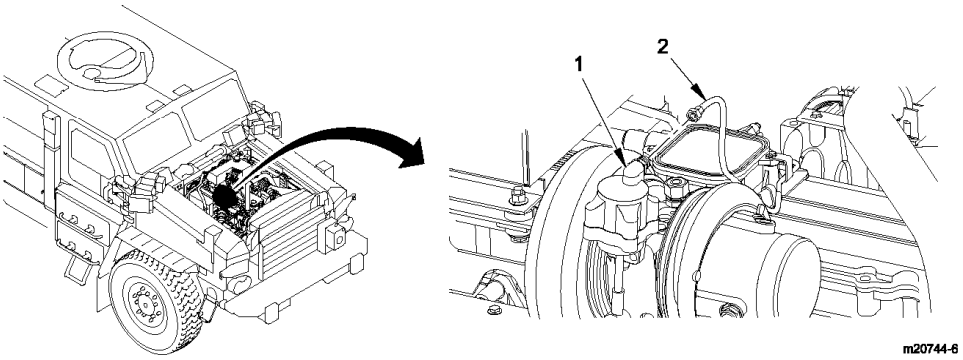

Figure 1. Turbocharger Air Supply Line – Disconnect.

FIGURE 2. Example of a maintenance work package with multiple tasks.

Source: https://assist.dla.mil -- Downloaded: 2016-12-09T23:24Z
Check the source to verify that this is the current version before use.

2. Remove oil filler cap (Figure 2, Item 9) from valve cover (Figure 2, Item 1).
3. Remove seven hex head screws (Figure 2, Item 6) and isolators (Figure 2, Item 7) from valve cover (Figure 2, Item 1).
4. Remove hex nut (Figure 2, Item 5) and clamp (Figure 2, Item 4) from studded flange cap screw (Figure 2, Item 3) on valve cover (Figure 2, Item 1).
5. Remove studded flange cap screw (Figure 2, Item 3) and isolator (Figure 2, Item 2) from valve cover (Figure 2, Item 1).
6. Remove valve cover (Figure 2, Item 1) from engine (Figure 2, Item 8).

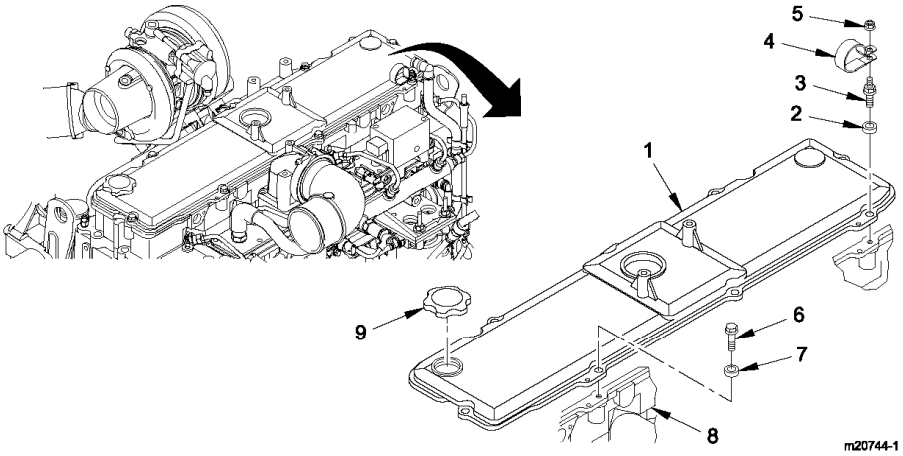

Figure 2. Valve Cover – Removal.

END OF TASK

INSPECTION

1. Check isolators (Figure 3, Item 3) for cracks, tears or brittleness. Replace isolators if damaged.
2. Check gasket (Figure 3, Item 1) for cracks on sealing surface. Replace gasket if damaged.
3. Replace gasket (Figure 3, Item 1) if it is removed from groove in valve cover (Figure 3, Item 2).

FIGURE 2. Example of a maintenance work package with multiple tasks - Continued.

Source: https://assist.dla.mil -- Downloaded: 2016-12-09T23:24Z
Check the source to verify that this is the current version before use.

TM X-XXXX-XXX-13

CHAPTER 6

MAINTAINER MAINTENANCE INSTRUCTIONS
FOR
155 MM, M109A6 HOWITZER

FIGURE 3. Example of a chapter title page.

Source: https://assist.dla.mil -- Downloaded: 2016-12-09T23:24Z
Check the source to verify that this is the current version before use.

TM NUMBER 0017

BELOW DEPOT SUSTAINMENT MAINTENANCE
24-VOLT CONNECTOR RECEPTACLE REPAIR
DISASSEMBLY
EFFECTIVITY NOTICE
Model A1

0017-1

FIGURE 4. Example of work package identification information.

Source: https://assist.dla.mil -- Downloaded: 2016-12-09T23:24Z
Check the source to verify that this is the current version before use.

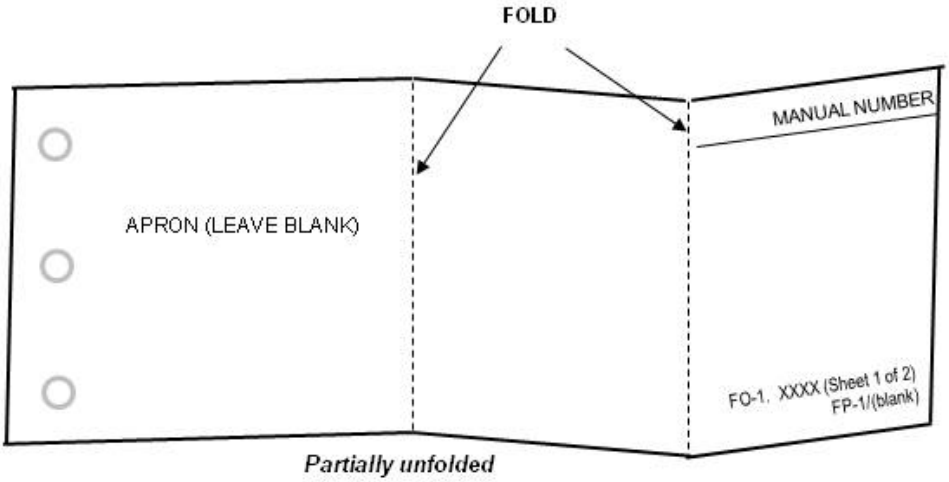

Partially unfolded

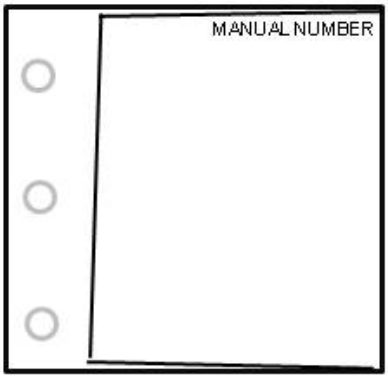

Fully folded

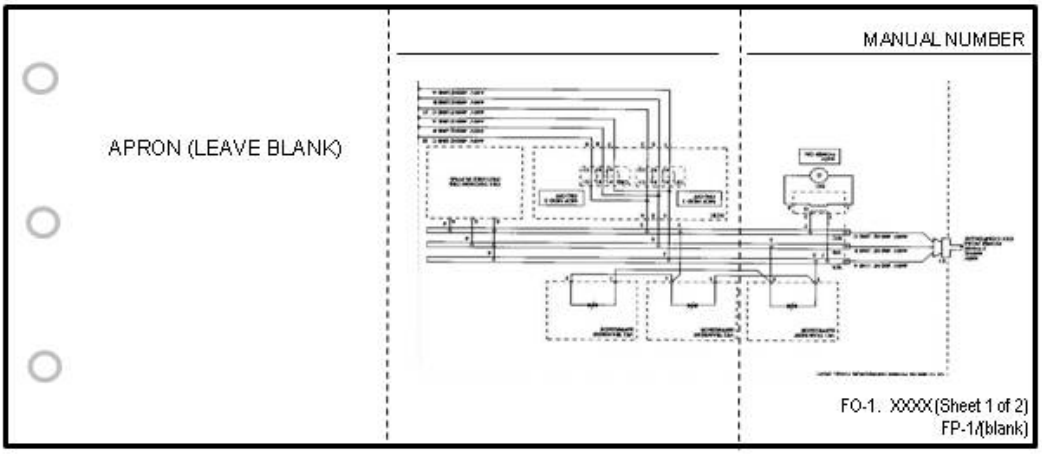

Fully unfolded

FIGURE 5. Example of a foldout page.

Source: https://assist.dla.mil -- Downloaded: 2016-12-09T23:24Z
Check the source to verify that this is the current version before use.

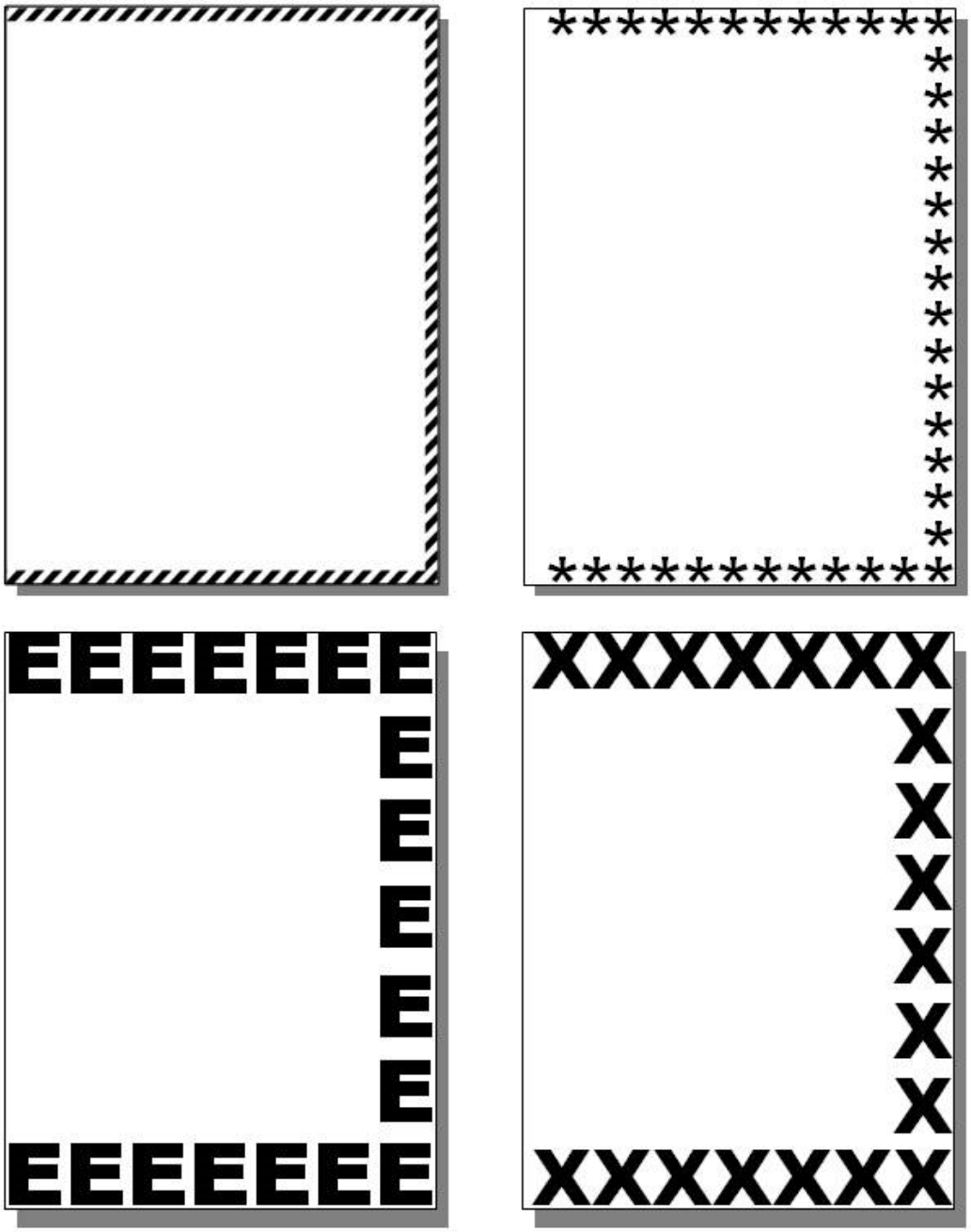

FIGURE 6. Example of emergency page markings.

Source: https://assist.dla.mil -- Downloaded: 2016-12-09T23:24Z
Check the source to verify that this is the current version before use.

SECURITY CLASSIFICATION

TM NUMBER(S)

APPENDIX A, TABLE A-I TITLE
FOR

NOMENCLATURE OF EQUIPMENT
TYPE, MODEL, PART NUMBER
NATIONAL STOCK NUMBER (EIC)
OR
SUBJECT

SUBTITLE

WEAPON SYSTEM NAME

ILLUSTRATION

SUPERSEDURE NOTICE

DISTRIBUTION STATEMENT

WARNING

DESTRUCTION NOTICE

GENERAL NOTICE

SERVICE NOMENCLATURE

TM DATE

SECURITY CLASSIFICATION

FIGURE 7. Example of a TM front cover.

Source: https://assist.dla.mil -- Downloaded: 2016-12-09T23:24Z
Check the source to verify that this is the current version before use.

TM X-XXXX-XXX-10

OPERATOR MANUAL
FOR

CHEMICAL-BIOLOGICAL-RADIOLOGICAL-NUCLEAR
RECONNAISSANCE SYSTEM (CBRNRS) FOX
M91B1
(NSN 6665-01-123-4567) (EIC Y38)

SUPERSEDURE NOTICE: TM 3-6665-339-10 dated 1 June 1996 supersedes TM 3-6665-339-10 dated 20 June 1994, Including all changes.

DISTRIBUTION STATEMENT C - Distribution authorized to U.S. Government Agencies and their contractors. This publication is required for administrative and operational purposes, as determined on 22 October, 1990. Other requests for this document must be referred to Commander, U.S. Army Chemical Research Development and Engineering Center, ATTN: SMCCR-MAT, Aberdeen Proving Ground, MD 21010-5423.

WARNING – This document contains technical data whose export is restricted by the Arms Export Control Act (Title 22, U.S.C., Sec 2751, et. seq.) or the Export Administration Act of 1979 (Title 50, U.S.C., App 2401 et. seq.), as amended Violations of these export laws are subject to severe criminal penalties. Disseminate in accordance with provisions of DOD Directive 5230.25.

DESTRUCTION NOTICE – For classified documents, follow the procedures in DOD 5220.22-M, National Industrial Security Program Operating Manual and/or DOD 5200.01, Information Security Program. For unclassified, limited documents, destroy by any method that will prevent disclosure of contents or reconstruction of the document.

HEADQUARTERS, DEPARTMENT OF THE ARMY
5 JULY 2001

FIGURE 7. Example of a TM front cover – Continued.

Source: https://assist.dla.mil -- Downloaded: 2016-12-09T23:24Z
Check the source to verify that this is the current version before use.

TM X-XXXX-XXX-13&P

OPERATOR AND FIELD MAINTENANCE MANUAL
INCLUDING REPAIR PARTS AND SPECIAL TOOLS LIST
FOR

HYDRAULIC SYSTEMS TEST AND REPAIR KIT (HSTRU)
P/N 123456789A
(NSN 4910-01-222-3434) (EIC HTV)

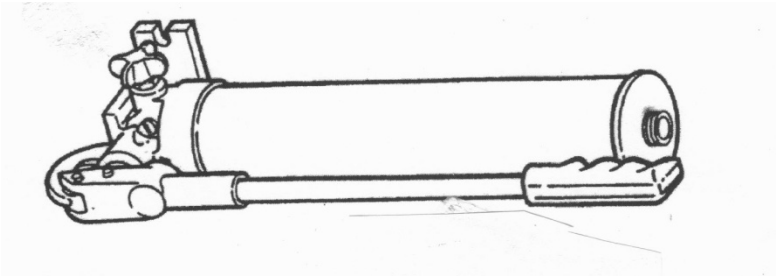

SUPERSEDURE NOTICE: TM 3-6665-339-10 dated 1 June 1996 supersedes TM 3-6665-339-10 dated 20 June 1994, Including all changes.

DISTRIBUTION STATEMENT C - Distribution authorized to U.S. Government Agencies and their contractors. This publication is required for administrative and operational purposes, as determined on 22 October, 1990. Other requests for this document must be referred to Commander, U.S. Army Aviation and Missile Lifecycle Management Command, (AMSAM-MMC-MA-NP), Redstone Arsenal, AL 35898-5230.

DESTRUCTION NOTICE – For classified documents, follow the procedures in DOD 5220.22-M, National Industrial Security Program Operating Manual and/or DOD 5200.01, Information Security Program. For unclassified, limited documents, destroy by any method that will prevent disclosure of contents or reconstruction of the document..

HAZARDOUS MATERIALS INFORMATION: This document has been reviewed for the presence of HAZARDOUS CHEMICALS AND TOXIC SUBSTANCES as defined by the EPCRA 302 and 313 lists by the AMCOM G-4 (Logistics) Environmental Division. As of the base document, dated 14 Aug 2009, all references to Hazardous Chemicals and Toxic Substances have been removed from this document by substitution with nonhazardous or less hazardous materials where possible.

HEADQUARTERS, DEPARTMENT OF THE ARMY
14 AUGUST 2009

FIGURE 7. Example of a TM front cover w/hazardous materials information general purpose notice – Continued.

Source: https://assist.dla.mil -- Downloaded: 2016-12-09T23:24Z
Check the source to verify that this is the current version before use.

TM 1-1520-238-PM

PHASED MAINTENANCE INSPECTION CHECKLIST
FOR

ARMY
AH-64A HELICOPTER

SUPERSEDURE NOTICE: TM 1-1520-238-PM dated 28 February 2002 supersedes TM 1-1520-238-PM dated 20 June 1994, Including all changes.

DISTRIBUTION STATEMENT A. Approved for public release; distribution is unlimited.

US ARMY AVIATION AND MISSILE
LIFE CYCLE MANAGEMENT COMMAND,
REDSTONE ARSENAL, AL

23 APRIL 2003

FIGURE 8. Example of a phased maintenance TM front cover.

Source: https://assist.dla.mil -- Downloaded: 2016-12-09T23:24Z
Check the source to verify that this is the current version before use.

DMWR XX-XXXX-XXX-2

DEPOT MAINTENANCE WORK REQUIREMENT
FOR

INTERROGATOR SETS
AN/TPX-52(V)1 (NSN 5895-00-321-1501) (EIC JWA)
AN/TPX-52(V)2 (NSN 5895-00-321-1502) (EIC JWB)
AN/TPX-52(V)3 (NSN 5895-00-321-1506) (EIC JWC)
AN/TPX-52(V)4 (NSN 5895-00-321-1600) (EIC JWD)
AN/TPX-52(V)6 (NSN 5895-00-321-1602) (EIC JWE)
AN/TPX-52A(V)1 (NSN 5895-01-456-4138) (EIC N/A)
AN/TPX-52A(V)2 (NSN 5895-01-455-4139) (EIC N/A)
AN/TPX-52A(V)3 (NSN 5895-01-456-3245) (EIC N/A)

This publication is not available through the St. Louis Media Distribution Division. This publication is available through the US Army Communications- Electronics Command, Fort Monmouth, NJ 07703-5007.

DISTRIBUTION STATEMENT D. Distribution authorized to the Department of Defense and U.S. DOD contractors only. This publication is critical technology, as determined on 20 May, 1998. Other requests for this document shall be referred to AMSEL-LCL-ECM, Building 6001, POD C3-322/49, Aberdeen Proving Ground, MD 21005-1846.

DESTRUCTION NOTICE – For classified documents, follow the procedures in DOD 5220.22-M, National Industrial Security Program Operating Manual and/or DOD 5200.01, Information Security Program. For unclassified, limited documents, destroy by any method that will prevent disclosure of contents or reconstruction of the document.

US ARMY COMMUNICATIONS-ELECTRONICS
LIFE CYCLE MANAGEMENT COMMAND,
ABERDEEN PROVING GROUND, MD

14 JUNE 2001

FIGURE 9. Example of a DMWR front cover.

Source: https://assist.dla.mil -- Downloaded: 2016-12-09T23:24Z
Check the source to verify that this is the current version before use.

DMWR X-XXXX-XXX

DEPOT MAINTENANCE WORK REQUIREMENT
CONTAINING
NATIONAL OVERHAUL STANDARDS
FOR

INTERROGATOR SETS
AN/TPX-52(V)1 (NSN 5895-00-321-1501) (EIC JWA)
AN/TPX-52(V)2 (NSN 5895-00-321-1502) (EIC JWB)

This publication is not available through the St. Louis Media Distribution Division. This publication is available through the US Army Communications- Electronics Command, Fort Monmouth, NJ 07703-5007.

DISTRIBUTION STATEMENT D. Distribution authorized to the Department of Defense and U.S. DOD contractors only. This publication is critical technology, as determined on 20 May, 1998. Other requests for this document shall be referred to AMSEL-LCL-ECM, Building 6001, POD C3-322/49, Aberdeen Proving Ground, MD 21005-1846.

DESTRUCTION NOTICE – For classified documents, follow the procedures in DOD 5220.22-M, National Industrial Security Program Operating Manual and/or DOD 5200.01, Information Security Program. For unclassified, limited documents, destroy by any method that will prevent disclosure of contents or reconstruction of the document.

US ARMY COMMUNICATIONS-ELECTRONICS
LIFE CYCLE MANAGEMENT COMMAND,
ABERDEEN PROVING GROUND, MD

DATE

FIGURE 10. Example of a DMWR cover with national overhaul standards.

Source: https://assist.dla.mil -- Downloaded: 2016-12-09T23:24Z
Check the source to verify that this is the current version before use.

NMWR X-XXXX-XXX

NATIONAL MAINTENANCE WORK REQUIREMENT
CONTAINING
NATIONAL OVERHAUL STANDARDS
FOR

INTERROGATOR SETS
AN/TPX-52(V)1 (NSN 5895-00-321-1501) (EIC JWA)
AN/TPX-52(V)2 (NSN 5895-00-321-1502) (EIC JWB)

This publication is not available through the St. Louis Media Distribution Division. This publication is available through the US Army Communications- Electronics Command, Fort Monmouth, NJ 07703-5007.

DISTRIBUTION STATEMENT D. Distribution authorized to the Department of Defense and U.S. DOD contractors only. This publication is critical technology, as determined on 20 May, 1998. Other requests for this document shall be referred to AMSEL-LCL-ECM, Building 6001, POD C3-322/49, Aberdeen Proving Ground, MD 21005-1846.

DESTRUCTION NOTICE – For classified documents, follow the procedures in DOD 5220.22-M, National Industrial Security Program Operating Manual and/or DOD 5200.01, Information Security Program. For unclassified, limited documents, destroy by any method that will prevent disclosure of contents or reconstruction of the document.

US ARMY COMMUNICATIONS-ELECTRONICS
LIFE CYCLE MANAGEMENT COMMAND,
ABERDEEN PROVING GROUND, MD

DATE

FIGURE 11. Example of a NMWR cover with national overhaul standards.

Source: https://assist.dla.mil -- Downloaded: 2016-12-09T23:24Z
Check the source to verify that this is the current version before use.

TM X-XXXX-XX-14

OPERATOR, FIELD, AND SUSTAINMENT MAINTENANCE MANUAL
CONTAINING
NATIONAL OVERHAUL STANDARDS
FOR

CHEMICAL-BIOLOGICAL-RADIOLOGICAL-NUCLEAR
RECONNAISSANCE SYSTEM (CBRNRS) FOX
M92B2

NSN 6665-01-124-4568 (EIC Y39)

DISTRIBUTION STATEMENT C - Distribution authorized to U.S. Government Agencies and their contractors. This publication is required for administrative and operational purposes, as determined on 22 October, 1990. Other requests for this document must be referred to Commander, U.S. Army Chemical Research Development and Engineering Center, ATTN: SMCCR-MAT, Aberdeen Proving Ground, MD 21010-5423.

WARNING – This document contains technical data whose export is restricted by the Arms Export Control Act (Title 22, U.S.C., Sec 2751, et. seq.) or the Export Administration Act of 1979 (Title 50, U.S.C., App. 2401 et. seq.), as amended. Violations of these export laws are subject to severe criminal penalties. Disseminate in accordance with provisions of DOD Directive 5230.25

DESTRUCTION NOTICE – For classified documents, follow the procedures in DOD 5220.22-M, National Industrial Security Program Operating Manual and/or DOD 5200.01, Information Security Program. For unclassified, limited documents, destroy by any method that will prevent disclosure of contents or reconstruction of the document.

HEADQUARTERS, DEPARTMENT OF THE ARMY
4 JUNE 2003

FIGURE 12. Example of front cover for TM with national overhaul standards.

Source: https://assist.dla.mil -- Downloaded: 2016-12-09T23:24Z
Check the source to verify that this is the current version before use.

	Notes	Type Size
1	The acquiring activity shall furnish the TM identification number9s). If the manual will be jointly used by more than one Service, the acquiring Service's number shall appear at the top with the other Service's number immediately below it. Each Service's number shall be prefixed with the word Army, Navy, Marine Corps, or Air Force as appropriate. All numbers shall appear above the ruled line, near the right margin.	24 to 30
2	Required for multivolume/multipart sets only, located below the TM identification number.	22 to 28
3	The heading U.S. MAIRINE CORPS TECHNICAL MANUAL shall appear in the upper center portion of the page below the TM identification number and above the ruled line.	18-24
4	The title is required to provide all information necessary to relate the manual to its subject and content. The title consists of the type of manual (e.g., Maintenance manual, Illustrated Parts Breakdown, Repair parts and Special Tools list, Inspection Manual, etc.), the level of maintenance (Crew/Operator, Field Level, and Sustainment), the prime title, and the subtitle as applicable.	24 to 30
5	The word FOR shall be placed between the Level of Maintenance and the Nomenclature of the Equipment.	16
6	The prime title consists of the nomenclature of Equipment, Type, Model, Part Number, and national Stock Number. Also, the classification of the equipment nomenclature shall be indicated as specified in DOD Manual 5200.1-R Chapter IV or DOD 5220.22-M, Section 11-19, when the manual itself is classified.	18-24
7	The Department of the Navy, United States Marine Corps, seal is used and shall be 2 inches in diameter.	NA
8	When a manual supersedes a previous manual, a supersedure notice shall be placed in the space indicated.	10 to 12 Bold
9	The distribution statement shall follow "DISTRIBUTION STATEMENT _:" and be placed in the space indicated.	10-12
10	When required, the export control notice shall be placed in the space indicated.	10-12
11	The destruction notice shall be placed in the space indicated.	10-12
12	When required, the copyright credit line shall be placed in the space indicated.	10-12
13	The words FOR OFFICIAL USE ONLY shall be centered at the bottom of the cover just below the ruled line as indicated.	18-24
14	The publication date is the last working day of the month in which the PM signs the promulgation page. It shall be right justified at the bottom of the cover.	18-24
15	The PCN shall be placed below the publication date and is right justified.	14

(SAMPLE NOT TO SCALE)

FIGURE 13. (MC) Cover for Marine Corps only TMs.

Source: https://assist.dla.mil -- Downloaded: 2016-12-09T23:24Z
Check the source to verify that this is the current version before use.

(1)TM XXXXXX-XX
(2) VOLUME X OF X

(3)U.S. MARINE CORPS TECHNICAL MANUAL

---

(4)TYPE OF PUBLICATION AND MAINTENANCE LEVEL

(5)FOR

(6)NOMENCLATURE OF EQUIPMENT

(6)TYPE, MODEL, PART NUMBER

(6)NATIONAL STOCK NUMBER

(8)THIS PUBLICATION SUPERSEDES TM XXXXXX-XX DATED MONTH 2000.

(9) **DISTRIBUTION C:** DISTRIBUTION AUTHORIZED TO U.S. GOVERNMENT AGENCIES AND THEIR CONTRACTORS ONLY FOR THE ADMINISTRATION AND OPERATIONAL PURPOSES AS DETERMINED **(INSERT DATE OF DETERMINATION).** OTHER REQUESTS FOR THIS DOCUMENT SHALL BE REFERRED TO: COMMANDANT OF THE MARINE CORPS (CODE ARDE), HEADQUARTERS U.S. MARINE CORPS, WASHINGTON, DC 20380-0001. (OR ACQUIRING PM OFFICE ADDRESS IS PERMISSABLE TO USE).

(10) **EXPORT CONTROL NOTICE**: (if applicable)

(11)DESTRUCTION NOTICE: FOR CLASSIFIED DOCUMENTS, FOLLOW THE PROCEDURES IN DOD 5220.22-M, NATIONAL INDUSTRIAL SECURITY PROGRAM OPERATING MANUAL AND/OR DOD 5200.01, INFORMATION SECURITY PROGRAM. FOR UNCLASSIFIED, LIMITED DOCUMENTS, DESTROY BY ANY METHOD THAT WILL PREVENT DISCLOSURE OF CONTENTS OR RECONSTRUCTION OF THE DOCUMENT.

(12)COPYRIGHT CREDIT LINE: (if applicable)

---

(13)FOR OFFICIAL USE ONLY

(14)MONTH 2000
(15)PCN XXX XXXXXX XX

(SAMPLE NOT TO SCALE)

FIGURE 13. MC) Cover for Marine Corps only TM - Continued.

Source: https://assist.dla.mil -- Downloaded: 2016-12-09T23:24Z
Check the source to verify that this is the current version before use.

DEPARTMENT OF THE NAVY
Headquarters, U.S. Marine Corps
Washington, DC 20380-0001

(One (1) inch left and right margins and last working day of the month) DD Month YYYY
(One (1) blank line)

1. This Technical Manual (TM), authenticated for Marine Corps use and effective upon receipt, provides (operation and/or level of maintenance as determined by TM XXXXXX-XX/X, (Volume 1 of 2) (As applicable) of the Nomenclature, Model, NSN ####-##-###-####. (Keep the 13 digit NSN numbers on same line, do not let it wrap.)

2. Safety issues related to the information contained in this manual should be reported to the Marine Corps Systems Command Safety Office at MCSC_Safety@usmc.mil. All significant safety hazards that have the potential to affect other commands and require widespread dissemination shall be reported via a Hazard Report per MCO P5102.1B.

3. Submit notice of discrepancies or suggested changes on a NAVMC 10772. For instructions on how to submit go to https://www.marcorsyscom.marines.mil/ProfessionalStaff/AcquisitionLogisticsProductSupport.aspx. Problems or questions regarding the NAVMC 10772 program should be reported by calling DSN 567-6439 or DSN 567-5-17 (Commercial numbers are (229) 639-6439 or (229) 639-5017).

(Two (2) blank lines)

BY DIRECTION OF THE COMMANDANT OF THE MARINE CORPS

(Three (3) blank lines)

OFFICIAL

(Four (4) blank lines)

I. M. SIGNER (PGD/PM as applicable)
Product Group Director, PGD-XX
Marine Corps Systems Command

(Two (2) blank lines)
DISTRIBUTION: PCN ### ###### ## or EDO

Sample Prom Letter for New TM

Text in red must be changed to represent the actual publication.

Text in green is for information.

Font is Times New Roman, 10pt.

(Updated 3 November 2011)

1/(2 blank)

FIGURE 14. (MC) Sample promulgation letter for new TM.

Source: https://assist.dla.mil -- Downloaded: 2016-12-09T23:24Z
Check the source to verify that this is the current version before use.

DEPARTMENT OF THE NAVY
Headquarters, U.S. Marine Corps
Washington, DC 20380-0001

(Two (2) blank lines)

TM XXXXXX-XX/X
(One (1) inch left and right margins) (As applicable) Volume 1 of 2
Change ##
PCN ### ###### ##
(One (1) blank line)
(Last working day of the month) DD Month YYYY

(One (1) blank line)
Encl : (1) New Page Inserts

1. Purpose. To transmit new page inserts to the basic manual, TM XXXXXX-XX/X, (Volume 1 of 2) (As applicable) dated Month YYYY, for the Nomenclature, Model, NSN ####-##-###-####.
(Keep the 13 digit NSN numbers on same line, do not let it wrap.)

2. Action. Insert new pages contained in the enclosure.

INSERT PAGES

25 and 26
29 and 30

3. Filing Instructions. This change transmittal page will be filed immediately following the signature page of the basic manual.

(Two (2) blank lines)

BY DIRECTION OF THE COMMANDANT OF THE MARINE CORPS

(Three (3) blank lines)

OFFICIAL

(Four (4) blank lines)

I. M. SIGNER (PGD/PM as applicable)
Product Group Director, PGD-XX
Marine Corps Systems Command

(Two (2) blank lines)

DISTRIBUTION: PCN ### ###### ## or EDO

Sample of Transmittal Letter for TM Change with New Insert Pages only.

Text in red must be changed to represent the actual publication.

Text in green is for information.

Font is Times New Roman, 10pt.

(Updated 23May2011)

1/(2 blank)

FIGURE 15. (MC) Sample promulgation letter for changed TM with inserted pages only.

Source: https://assist.dla.mil -- Downloaded: 2016-12-09T23:24Z
Check the source to verify that this is the current version before use.

DEPARTMENT OF THE NAVY
Headquarters, U.S. Marine Corps
Washington, DC 20380-0001

(Two (2) blank lines)

TM XXXXXX-XX/X
(As applicable) Volume 1 of 2
Change ##
(One (1) inch left and right margins) PCN ### ###### ##
(One (1) blank line)
(Last working day of month) DD Month YYY

(One (1) blank line)
Encls: (1) New Page Inserts
(2) Replacement Pages

1. Purpose. To transmit new page inserts and replacement pages to the basic manual, TM XXXXXX-XX/X, (Volume 1 of 2) (As applicable) dated Month YYYY, for the Nomenclature, Model, NSN ####-##-###-####. (Keep the 13 digit NSN numbers on same line, do not let it wrap.)

2. Action. Remove present pages listed below and replace with corresponding pages contained in enclosures (1) and (2). Significant changes contained in the replacement pages of this change are denoted by a bar symbol. Changes to illustrations are denoted by a miniature pointing hand. (This sentence is optional, use only if changes are made to illustrations).

REMOVE PAGES	INSERT PAGES
25 and 26	25 and 26 29 and 30

3. Filing Instructions. This change transmittal page will be filed immediately following the signature page of the basic manual.

(Two (2) blank lines)

BY DIRECTION OF THE COMMANDANT OF THE MARINE CORPS

(Three (3) blank lines)

OFFICIAL

(Four (4) blank lines)

I. M. SIGNER (PGD/PM as applicable)
Product Group Director, PGD-XX
Marine Corps Systems Command

(Two (2) blank lines)
DISTRIBUTION: PCN ### ###### ## or EDO

Sample Transmittal Letter for a TM Change with New Page Inserts and Replacement Pages

Text in red must be changed to represent the actual publication.

Text in green is for information.

Font is Times New Roman, 10pt.

(Updated 23May2011)

1/(2 blank)

FIGURE 16. (MC) Sample promulgation letter for changed TM with inserted pages and replacement pages.

Source: https://assist.dla.mil -- Downloaded: 2016-12-09T23:24Z
Check the source to verify that this is the current version before use.

DEPARTMENT OF THE NAVY
Headquarters, U.S. Marine Corps
Washington, DC 20380-0001

(Two (2) blank lines)

TM XXXXXX-XX/X
(One (1) inch left and right margins) (As applicable) Volume 1 of 2
Change ##
PCN ### ###### ##
(One (1) blank line)
(Last working day of month) DD Month YYYY

(One (1) blank line)
Encl: (1) Replacement Pages

1. Purpose. To transmit replacement pages to the basic manual, TM XXXXXX-XX/X, (Volume 1 of 2 As applicable) dated Month YYYY, for the Nomenclature, Model, NSN ####-##-###-####. (Keep the 13 digit NSN numbers on same line, do not let it wrap.)

2. Action. Remove present pages listed below and replace with corresponding pages contained in the enclosure. Significant changes contained in the replacement pages of this change are denoted by a bar symbol. Changes to illustrations are denoted by a miniature pointing hand. (This sentence is optional, use only if changes are made to illustrations).

REMOVE PAGES	INSERT PAGES
A/(B blank)	A/(B blank)
25 and 26	25 and 26
29 and 30	29 and 30

3. Filing Instructions. This change transmittal page will be filed immediately following the signature page of the basic manual.

(Two (2) blank lines)

BY DIRECTION OF THE COMMANDANT OF THE MARINE CORPS

(Three (3) blank lines)

OFFICIAL

(Four (4) blank lines)

I. M. SIGNER (PGD/PM as applicable)
Product Group Director, PGD-XX
Marine Corps Systems Command

(Two (2) blank lines)
DISTRIBUTION: PCN ### ###### ## or EDO

Sample of Transmittal Letter for a multi-volume TM Change with Replacement Pages

Text in red must be changed to represent the actual publication.

Text in green is for information.

Font is Times New Roman, 10pt.

(Updated 3 November 2011)

1/(2 blank)

FIGURE 17. (MC) Sample promulgation letter for multi-volume TM with changes.

Source: https://assist.dla.mil -- Downloaded: 2016-12-09T23:24Z
Check the source to verify that this is the current version before use.

Army TM X-XXXX-XX-XX-X

DEPARTMENT OF THE NAVY
Headquarters, U.S. Marine Corps
Washington, DC 20380-0001

(One (1) inch left and right margins) (Last working day of the month) DD Month YYYY
(One (1) blank line)

1. This Technical Manual (TM), authenticated for Marine Corps use and effective upon receipt, provides (operation and/or level of maintenance as determined by TM XXXXXX-XX/X, of the Nomenclature, Model,
NSN ####-##-###-####. (Keep the 13 digit NSN numbers on same line, do not let it wrap.)

2. TM XXXXXX-XX/X, dated Month YYYY is/are hereby superseded for Marine Corps use. (List each manual by Short Title and publication date that is superseded).

3. Safety issues related to the information contained in this manual should be reported to the Marine Corps Systems Command Safety Office at MCSC_Safety@usmc.mil. All significant safety hazards that have the potential to affect other commands and require widespread dissemination shall be reported via a Hazard Report per MCO P5102.1B.

4. Submit notice of discrepancies or suggested changes on a NAVMC 10772. For instructions on how to submit go to https://www.marcorsyscom.marines.mil/ProfessionalStaff/AcquisitionLogisticsProductSupport.aspx. Problems or questions regarding the NAVMC 10772 program should be reported by calling DSN 567-6439 or DSN 567-5-17 (Commercial numbers are (229) 639-6439 or (229) 639-5017).

(Two (2) blank lines)

BY DIRECTION OF THE COMMANDANT OF THE MARINE CORPS
AND BY ORDER OF THE SECRETARY OF THE ARMY

(Three (3) blank lines)

OFFICIAL

(Four (4) blank lines)

Sample Prom Letter of a Joint service TM Revision

Text in red must be changed to represent the actual publication.

Each volume requires its own Prom Letter.
(Updated 3 November 2011)

I. M. SIGNER (PGD/PM as applicable)
Product Group Director, PGD-XX
Marine Corps Systems Command

I. M. SIGNER (ARMY)
Brigadier General, United States Army
The Adjutant General

I. M. SIGNER
General, United States Army
Chief of Staff

(Two (2) blank lines)
DISTRIBUTION: PCN ### ###### ## or EDO
U.S. Army XXXXXXXXXXXXXXXX

1/(2 blank)

FIGURE 18. (MC) Sample promulgation letter for joint service TM involving the Marine Corps.

Source: https://assist.dla.mil -- Downloaded: 2016-12-09T23:24Z
Check the source to verify that this is the current version before use.

DEPARTMENT OF THE NAVY
Headquarters, U.S. Marine Corps
Washington, DC 20380-0001

(One (1) inch left and right margins) (Two (2) blank lines)

(Last working day of the month) DD Month YYYY

(One (1) blank line)

1. This Technical Manual (TM), authenticated for Marine Corps use and effective upon receipt, provides (operation and/or level of maintenance as determined by TM XXXXXX-XX/(alpha character indicates revision level) for the Nomenclature, Model, NSN ####-##-###-####. (Keep the 13 digit NSN numbers on same line, do not let it wrap.)

2. TM XXXXXX-XX, dated Month YYYY is/are hereby superseded for Marine Corps use.

3. Safety issues related to the information contained in this manual should be reported to the Marine Corps Systems Command Safety Office at MCSC_Safety@usmc.mil. All significant safety hazards that have the potential to affect other commands and require widespread dissemination shall be reported via a Hazard Report per MCO P5102.1B.

4. Submit notice of discrepancies or suggested changes on a NAVMC 10772. For instructions on how to submit go to https://www.marcorsyscom.marines.mil/ProfessionalStaff/AcquisitionLogisticsProductSupport.aspx. Problems or questions regarding the NAVMC 10772 program should be reported by calling DSN 567-6439 or DSN 567-5-17 (Commercial numbers are (229) 639-6439 or (229) 639-5017).

(Two (2) blank lines)

BY DIRECTION OF THE COMMANDANT OF THE MARINE CORPS

(Three (3) blank lines)
OFFICIAL

(Four (4) blank lines)

I. M. SIGNER (PGD/PM as applicable)
Product Group Director, PGD-XX
Marine Corps Systems Command
(Two (2) blank lines)

DISTRIBUTION: PCN ### ###### ## or EDO

Sample Prom Letter for a single volume TM Revision

Text in red must be changed to represent the actual publication.

Text in green is for information.

Font is Times New Roman, 10pt.

(Updated 3 November 2011)

1/(2 blank)

FIGURE 19. (MC) Sample promulgation letter for revised TM.

Source: https://assist.dla.mil -- Downloaded: 2016-12-09T23:24Z
Check the source to verify that this is the current version before use.

MANUAL NUMBER

CHANGE
NO. 1

HEADQUARTERS,
DEPARTMENT OF THE ARMY
WASHINGTON, D.C., 31 AUGUST 1993

OPERATOR MANUAL
FOR
TEST SET
RADAR ABC
NSN XXXX-XX-XXX-XXXX (EIC XXX)

DISTRIBUTION STATEMENT A. Approved for public release distribution is unlimited.

TM X-XXX-XXXX-XX, 5 June 1987, is updated as follows:

1. File this sheet in front of the manual for reference
2. This change is a result of new preventive maintenance checks and service procedures and new expendable/durable supplies and materials.
3. New or updated text is indicated by a vertical bar in the outer margin of the page.
4. Added illustrations are indicated by a vertical bar adjacent to the figure number. Changed illustrations are indicated by a miniature pointing hand adjacent to the updated area and a vertical bar adjacent to the figure number.
5. Remove old pages and insert new pages as indicated below:

Remove Pages	Insert Pages
a through d	a through d
None	e through h

6. Replace the following work packages with their revised version.

Work Package Number
WP 0154
WP 0042

7. Add the following new work packages.

Work Package Number
WP 1625.1
WP 1700.1

FIGURE 20. Example of a change transmittal page.

Source: https://assist.dla.mil -- Downloaded: 2016-12-09T23:24Z
Check the source to verify that this is the current version before use.

MANUAL NUMBER

LIST OF EFFECTIVE PAGES/WORK PACKAGES

NOTE: Zero in the "Change No." column indicates an original page or work package.

Date of issue for the original manual is:

Original: 13 July 1998

TOTAL NUMBER OF PAGES FOR FRONT AND REAR MATTER IS 26 AND TOTAL NUMBER OF WORK PACKAGES IS 35, CONSISTING OF THE FOLLOWING:

Page/WP No.	Change No.	Page/WP No.	Change No.
Front Cover	0	Chapter 7 title page	0
Blank	0	Blank	0
a-c	0	WP 0022 (2 pgs)	0
d blank	0		
i-iii	0	WP 0023 (4 pgs)	0
Iv blank	0	WP 0024 (6 pgs)	0
Chapter 1 title page	0	WP 0025 (4 pgs)	0
Blank	0	WP 0026 (4 pgs)	0
WP 0001 (4 pgs)	0	WP 0027 (4 pgs)	0
WP 0002 (10 pgs)	0	WP 0028 (4 pgs)	0
WP 0003 (2 pgs)	0	WP 0029 (4 pgs)	0
WP 0004 (2 pgs)	0	WP 0030 (4 pgs)	0
Chapter 2 title page	0	WP 0031 (6 pgs)	0
Blank	0	WP 0032 (6 pgs)	0
WP 0005 (2 pgs)	0	WP 0033 (2 pgs)	0
WP 0006 (8 pgs)	0	WP 0034 (2 pgs)	0
WP 0007 (2 pgs)	0	WP 0035 (2 pgs)	0
Chapter 3 title page	0	INDEX-1 – INDEX-14	0
Blank	0	Inside back cover	0
WP 0008 (2 pgs)	0	Back cover	0
Chapter 4 title page	0		
Blank	0		
WP 0009 (12 pgs)	0		
Chapter 5 title page	0		
Blank	0		
WP 0010 (2 pgs)	0		
WP 0011 (2 pgs)	0		
Chapter 6 title page	0		
Blank	0		
WP 0012 (20 pgs)	0		
WP 0013 (30 pgs)	0		
WP 0014 (30 pgs)	0		
WP 0015 (2 pgs)	0		
WP 0016 (4 pgs)	0		
WP 0017 (2 pgs)	0		
WP 0018 (8 pgs)	0		
WP 0019 (12 pgs)	0		
WP 0020 (2 pgs)	0		
WP 0021 (2 pgs)	0		

A

FIGURE 21. Example of a list of effective pages for a new publication.

Source: https://assist.dla.mil -- Downloaded: 2016-12-09T23:24Z
Check the source to verify that this is the current version before use.

MANUAL NUMBER

LIST OF EFFECTIVE PAGES/WORK PACKAGES

NOTE: The portion of text affected by the change is indicated by a vertical bar in the outer margins of the page. Changes to illustrations are indicated by a vertical bar adjacent to the title. Zero in the "Change No." column indicates an original page or work package.

Dates of issue for the original manual and for the changes are:

Original	13 July 1998
Change 1	10 December 1998
Change 2	22 March 1999

TOTAL NUMBER OF PAGES FOR FRONT AND REAR MATTER IS 26 AND TOTAL NUMBER OF WORK PACKAGES IS 35, CONSISTING OF THE FOLLOWING:

Page/WP No.	Change No.	Page/WP No.	Change No.
Front Cover	0	Chapter 7 title page	0
Blank	0	Blank	0
a-d	0	WP 0022 (2 pgs)	0
i-iii	0	WP 0023 (4 pgs)	2
Iv blank	0	WP 0024 (6 pgs)	1
Chapter 1 title page	0	WP 0025 (4 pgs)	1
Blank	0	WP 0026 (4 pgs)	0
WP 0001 (4 pgs)	1	WP 0027 (4 pgs) Deleted	2
WP 0002 (10 pgs)	1	WP 0028 (4 pgs)	0
WP 0003 (2 pgs)	0	WP 0029 (4 pgs)	0
WP 0004 (2 pgs)	2	WP 0030 (4 pgs)	1
Chapter 2 title page	0	WP 0031 (6 pgs)	2
Blank	0	WP 0032 (6 pgs)	0
WP 0005 (2 pgs)	1	WP 0033 (2 pgs)	1
WP 0006 (8 pgs)	0	WP 0034 (2 pgs)	0
WP 0007 (2 pgs)	0	WP 0034.1 (4 pgs) Added	2
Chp 3 title page	0	WP 0035 (2 pgs)	2
Blank	0	INDEX-1 – INDEX-14	0
WP 0008 (2 pgs)	0	Inside back cover	0
Chapter 4 title page	0	Back cover	0
Blank	0		
WP 0009 (12 pgs)	0		
Chapter 5 title page	0		
Blank	0		
WP 0010 (2 pgs)	0		
WP 0011 (2 pgs)	1		
Chapter 6 title page	0		
Blank	0		
WP 0012 (20 pgs)	2		
WP 0013 (30 pgs)	0		
WP 0014 (30 pgs)	2		
WP 0015 (2 pgs)	0		
WP 0016 (4 pgs)	0		
WP 0017 - WP 0019 (22 pgs)	1		
WP 0020 (2 pgs)	2		
WP 0021 (2 pgs)	0		

A

FIGURE 22. Example of a list of effective pages for a manual with changes.

Source: https://assist.dla.mil -- Downloaded: 2016-12-09T23:24Z
Check the source to verify that this is the current version before use.

MANUAL NUMBER

LIST OF EFFECTIVE PAGES/WORK PACKAGES

NOTE: This manual supersedes TM X-XXXX-XXX-XX dated 15 Mar 1998. Zero in the "Change No." column indicates an original page or work package.

Date of issue for the revised manual is:

Original 16 September 1998

TOTAL NUMBER O F PAGES FOR FRONT AND REAR MATTER IS 26 AND TOTAL NUMBER OF WORK PACKAGES IS 36, CONSISTING OF THE FOLLOWING:

Page/WP No.	Change No.	Page/WP No.	Change No.
Front Cover	0	Chapter 7 title page	0
Blank	0	Blank	0
a-d	0	WP 0022 (2 pgs)	0
i-iii	0	WP 0023 (4 pgs)	0
Iv blank	0	WP 0024 (6 pgs)	0
Chapter 1 title page	0	WP 0025 (4 pgs)	0
Blank	0	WP 0026 (4 pgs)	0
WP 0001 (4 pgs)	0	WP 0027 (4 pgs)	0
WP 0002 (10 pgs)	0	WP 0028 (4 pgs)	0
WP 0003 (2 pgs)	0	WP 0029 (4 pgs)	0
WP 0004 (2 pgs)	0	WP 0030 (4 pgs)	0
Chapter 2 title page	0	WP 0031 (6 pgs)	0
Blank	0	WP 0032 (6 pgs)	0
WP 0005 (2 pgs)	0	WP 0033 (2 pgs)	0
WP 0006 (8 pgs)	0	WP 0034 (2 pgs)	0
WP 0007 (2 pgs)	0	WP 0035 (4 pgs)	0
Chapter 3 title page	0	WP 0036 (2 pgs)	0
Blank	0	INDEX-1 – INDEX-14	0
WP 0008 (2 pgs)	0	Inside back cover	0
Chapter 4 title page	0	Back cover	0
Blank	0		
WP 0009 (12 pgs)	0		
Chapter 5 title page	0		
Blank	0		
WP 0010 (2 pgs)	0		
WP 0011 (2 pgs)	0		
Chapter 6 title page	0		
Blank	0		
WP 0012 (20 pgs)	0		
WP 0013 (30 pgs)	0		
WP 0014 (30 pgs)	0		
WP 0015 (2 pgs)	0		
WP 0016 (4 pgs)	0		
WP 0017 (2 pgs)	0		
WP 0018 (8 pgs)	0		
WP 0019 (12 pgs)	0		
WP 0020 (2 pgs)	0		
WP 0021 (2 pgs)	0		

A

FIGURE 23. Example of a list of effective pages for a revised manual.

Source: https://assist.dla.mil -- Downloaded: 2016-12-09T23:24Z
Check the source to verify that this is the current version before use.

MANUAL NUMBER

LIST OF EFFECTIVE PAGES/WORK PACKAGES

NOTE: Zero in the "Change No." column indicates an original page or work package.

Date of issue for the original manual is:

Original 24 April 1990

TOTAL NUMBER OF VOLUMES IS 3, TOTAL NUMBER O F PAGES FOR FRONT AND REAR MATTER IS 62 AND TOTAL NUMBER OF WORK PACKAGES IS 30, CONSISTING OF THE FOLLOWING:

Page/WP No.	Change No.	Page/WP No.	Change No.
VOLUME 1		WP 0021 (2 pgs)	0
Front cover	0	INDEX-1 - INDEX 6	0
Blank	0	Inside back cover	0
a-f	0	Back cover	0
i-viii	0	VOLUME 3	0
Chapter 1 title page	0	Front cover	0
WP 0001 (4 pgs)	0	Blank	0
WP 0002 (10 pgs)	0	a-b	0
WP 0003 (2 pgs)	0	i-ii	0
WP 0004 (2 pgs)	0	Chapter 7 title page	0
Chapter 2 title page	0	WP 0022 (2 pgs)	0
WP 0005 (2 pgs)	0	WP 0023 (4 pgs)	0
WP 0006 (8 pgs)	0	WP 0024 (6 pgs)	0
WP 0007 (2 pgs)	0	WP 0025 (4 pgs)	0
Chapter 3 title page	0	WP 0026 (4 pgs)	0
WP 0008 (2 pgs)	0	WP 0027 (4 pgs)	0
INDEX-1 – INDEX-16	0	WP 0028 (4 pgs)	0
Inside back cover	0	WP 0029 (4 pgs)	0
Back cover	0	WP 0030 (4 pgs)	0
VOLUME 2		INDEX-1 - INDEX-4	0
Front cover	0	Inside back cover	0
Blank	0	Back cover	0
a-b	0		
i-iv	0		
Chapter 4 title page	0		
WP 0009 (12 pgs)	0		
Chapter 5 title page	0		
WP 0010 (2 pgs)	0		
WP 0011 (2 pgs)	0		
Chapter 6 title page	0		
WP 0012 (20 pgs)	0		
WP 0013 (30 pgs)	0		
WP 0014 (30 pgs)	0		
WP 0015 (2 pgs)	0		
WP 0016 (4 pgs)	0		
WP 0017 (2 pgs)	0		
WP 0018 (8 pgs)	0		
WP 0019 (12 pgs)	0		
WP 0020 (2 pgs)	0		

A USAF

FIGURE 24. Example of a list of effective pages for a multi-volume, multi-service manual.

Source: https://assist.dla.mil -- Downloaded: 2016-12-09T23:24Z
Check the source to verify that this is the current version before use.

TM NUMBER

SERVICE NOMENCLATURE
CITY, STATE, DATE

PUBLICATION TITLE

NOMENCLATURE OF EQUIPMENT
TYPE, MODEL, PART NUMBER
NATIONAL STOCK NUMBER (EIC)
OR
SUBJECT
SUBTITLE
WEAPON SYSTEM NAME

REPORTING ERRORS AND RECOMMENDING IMPROVEMENTS

You can help improve this manual. If you find any mistakes or if you know of a way to improve the procedures, please let us know. Mail your letter, DA Form 2028 (Recommended Changes to Publications and Blank Forms) directly to: (*insert name and address of proponent*). You may also send in your recommended changes via electronic mail or by fax. Our fax number is (*insert DSN and commercial number of proponent*). Our email address is (*insert email address of proponent*). A reply will be furnished to you.

SUPERSEDURE NOTICE

DISTRIBUTION STATEMENT

EXPORT CONTROL WARNING

DESTRUCTION NOTICE

i

FIGURE 25. Example of a title page.

Source: https://assist.dla.mil -- Downloaded: 2016-12-09T23:24Z
Check the source to verify that this is the current version before use.

MANUAL NUMBER

HEADQUARTERS
DEPARTMENT OF THE ARMY
WASHINGTON, D.C., 1 JUNE 1996

OPERATOR MANUAL

CHEMICAL-BIOLOGICAL-RADIOLOGICAL-NUCLEAR
RECONNAISSANCE SYSTEM (CBRNRS) FOX
M91B1
NSN 6665-01-123-4567 (EIC Y38)

REPORTING ERRORS AND RECOMMENDING IMPROVEMENTS

You can help improve this manual. If you find any mistakes or if you know of a way to improve the procedures, please let us know. Mail your letter, DA Form 2028 (Recommended Changes to Publications and Blank Forms) directly to: Technical Director, Edgewood Research Development and Engineering Center, ATTN: SCBRD-ENL-V, Aberdeen Proving Ground, MD 21010-5423. You may also send in your recommended changes via electronic mail or by fax. Our fax number is (*insert DSN and commercial number of proponent*). Our email address is (*insert email address of proponent*). A reply will be furnished to you.

DISTRIBUTION STATEMENT C. Distribution authorized to U.S. Government agencies and their contractors. This publication is Administrative-Operational Use required for administrative and operational purposes, as determined on 22 October 1990. Other requests for this document must be referred to Commander, U.S. Army Chemical Research Development and Engineering Center, ATTN: SMCRR-MAT, Aberdeen Proving Ground, MD 21010-5423.

WARNING – This document contains technical data whose export is restricted by the Arms Export Control Act (Title 22, U.S.C., Sec 2751, et. seq.) or the Export Administration Act of 1979 (Title 50, U.S.C., App. 2401 et. seq.), as amended. Violations of these export laws are subject to severe criminal penalties. Disseminate in accordance with provisions of DOD Directive 5230.25.

DESTRUCTION NOTICE – For classified documents, follow the procedures in DOD 5220.22-M, National Industrial Security Program Operating Manual and/or DOD 5200.01, Information Security Program. For unclassified, limited documents, destroy by any method that will prevent disclosure of contents or reconstruction of the document.

i

FIGURE 25. Example of a title page – Continued.

Source: https://assist.dla.mil -- Downloaded: 2016-12-09T23:24Z
Check the source to verify that this is the current version before use.

MANUAL NUMBER

HEADQUARTERS
DEPARTMENT OF THE ARMY
WASHINGTON, D.C., 1 JUNE 1996

FIELD REPAIR PARTS AND SPECIAL TOOLS LIST
FOR

CHEMICAL-BIOLOGICAL-RADIOLOGICAL-NUCLEAR
RECONNAISSANCE SYSTEM (CBRNRS) FOX
M91B1
NSN 6665-01-123-4567 (EIC Y38)

REPORTING ERRORS AND RECOMMENDING IMPROVEMENTS

You can help improve this manual. If you find any mistakes or if you know of a way to improve the procedures, please let us know. Mail your letter, DA Form 2028 (Recommended Changes to Publications and Blank Forms) directly to: Technical Director, Edgewood Research Development and Engineering Center, ATTN: SCBRD-ENL-V, Aberdeen Proving Ground, MD 21010-5423. You may also send in your recommended changes via electronic mail or by fax. Our fax number is (*insert DSN and commercial number of proponent*). Our email address is (*insert email address of proponent*). A reply will be furnished to you.

Current as of 15 May 2004

DISTRIBUTION STATEMENT C. Distribution authorized to U.S. Government agencies and their contractors. This publication is Administrative-Operational Use required for administrative and operational purposes, as determined on 22 October 1990. Other requests for this document must be referred to Commander, U.S. Army Chemical Research Development and Engineering Center, ATTN: SMCRR-MAT, Aberdeen Proving Ground, MD 21010-5423.

WARNING – This document contains technical data whose export is restricted by the Arms Export Control Act (Title 22, U.S.C., Sec 2751, et. seq.) or the Export Administration Act of 1979 (Title 50, U.S.C., App. 2401 et. seq.), as amended. Violations of these export laws are subject to severe criminal penalties. Disseminate in accordance with provisions of DOD Directive 5230.25.

DESTRUCTION NOTICE – For classified documents, follow the procedures in DOD 5220.22-M, National Industrial Security Program Operating Manual and/or DOD 5200.01, Information Security Program. For unclassified, limited documents, destroy by any method that will prevent disclosure of contents or reconstruction of the document.

i

FIGURE 26. Example of a title page for a RPSTL TM.

Source: https://assist.dla.mil -- Downloaded: 2016-12-09T23:24Z
Check the source to verify that this is the current version before use.

MANUAL NUMBER

HEADQUARTERS
DEPARTMENT OF THE ARMY
WASHINGTON, D.C., 1 JUNE 1996

FIELD MAINTENANCE MANUAL
INCLUDING REPAIR PARTS AND SPECIAL TOOLS LIST
FOR

CHEMICAL-BIOLOGICAL-RADIOLOGICAL-NUCLEAR
RECONNAISSANCE SYSTEM (CBRNRS) FOX
M91A1
NSN 6665-01-123-4567 (EIC Y38)

REPORTING ERRORS AND RECOMMENDING IMPROVEMENTS

You can help improve this manual. If you find any mistakes or if you know of a way to improve the procedures, please let us know. Mail your letter, DA Form 2028 (Recommended Changes to Publications and Blank Forms) directly to: Technical Director, Edgewood Research Development and Engineering Center, ATTN: SCBRD-ENL-V, Aberdeen Proving Ground, MD 21010-5423. You may also send in your recommended changes via electronic mail or by fax. Our fax number is (*insert DSN and commercial number of proponent*). Our email address is (*insert email address of proponent*). A reply will be furnished to you.

Current as of 15 May 2004

DISTRIBUTION STATEMENT C. Distribution authorized to U.S. Government agencies and their contractors. This publication is Administrative-Operational Use required for administrative and operational purposes, as determined on 22 October 1990. Other requests for this document must be referred to Commander, U.S. Army Chemical Research Development and Engineering Center, ATTN: SMCRR-MAT, Aberdeen Proving Ground, MD 21010-5423.

WARNING – This document contains technical data whose export is restricted by the Arms Export Control Act (Title 22, U.S.C., Sec 2751, et. seq.) or the Export Administration Act of 1979 (Title 50, U.S.C., App. 2401 et. seq.), as amended. Violations of these export laws are subject to severe criminal penalties. Disseminate in accordance with provisions of DOD Directive 5230.25.

DESTRUCTION NOTICE – For classified documents, follow the procedures in DOD 5220.22-M, National Industrial Security Program Operating Manual and/or DOD 5200.01, Information Security Program. For unclassified, limited documents, destroy by any method that will prevent disclosure of contents or reconstruction of the document.

i

FIGURE 27. Example of a title page for a narrative TM with RPSTL.

Source: https://assist.dla.mil -- Downloaded: 2016-12-09T23:24Z
Check the source to verify that this is the current version before use.

TM 1-1520-XXX-PM

HEADQUARTERS
DEPARTMENT OF THE ARMY
WASHINGTON, D.C., 28 FEBRUARY 2015

PHASED MAINTENANCE INSPECTION CHECKLIST

ARMY
XYZ HELICOPTER

REPORTING ERRORS AND RECOMMENDING IMPROVEMENTS

You can help improve this manual. If you find any mistakes or if you know of a way to improve the procedures, please let us know. Mail your letter, DA Form 2028 (Recommended Changes to Publications and Blank Forms) directly to: Commander, U.S. Army Aviation and Missile Command, ATTN: AMSAM-MMA-NP, Redstone Arsenal, AL, 35898-5230. You may also send in your recommended changes via electronic mail or by fax. Our fax number is FAX 256-999-9999 or FAX (DSN) 999-9999. Our email address is 2028@redstone.army.mil. A reply will be furnished to you.

WARNING

Certain inspections are mandatory safety-of-flight requirements, and the inspection intervals cannot be exceeded. In the event these inspections cannot be accomplished at the specified interval, the aircraft condition status symbol will be immediately changed to a red X. Mandatory safety-of-flight inspection items are printed in bold face type.

NOTE

Inspection items contained in this manual are considered the minimum requirements for performing phased maintenance and must be performed. The cumulative effects of inspection deferrals are unknown and could result in catastrophic failure or increased maintenance at a later date. Therefore, the use of special lettering to emphasize mandatory safety-of-flight inspection items is not to be construed as authority for deferral of other inspections.

SUPERSEDURE NOTICE: TM 1-1520-XXX-PM dated 28 February 2015 supersedes TM 1-1520-XXX-PM dated 23 June 1995, Including all changes.

DISTRIBUTION STATEMENT A. Approved for public release; distribution is unlimited.

i

FIGURE 28. Example of a title page with warning data for phased maintenance inspection and preventive maintenance services.

Source: https://assist.dla.mil -- Downloaded: 2016-12-09T23:24Z
Check the source to verify that this is the current version before use.

MANUAL NUMBER

TABLE OF CONTENTS

Page No.
WP Sequence No.

How to Use This Manual vii

Chapter 1 – Operator General Information, Description, and Theory of Operation

Transportation Electronic Shop General Information ..... WP 0001-1

Figure 1. Family AN/TSM-191 Vehicles ..... WP 0001-1

Transportation Electronic Shop Description and Data ..... WP 0002-1

Figure 1. Exterior Components ..... WP 0002-1

Figure 2. Interior Components ..... WP 0002-2

Table 1. Difference Between Models ..... WP 0002-3

Introduction ..... WP 0003-1

Powerpack Theory of Operation ..... WP 0004-1

Fuel System Theory of Operation ..... WP 0005-1

Electrical System Theory of Operation ..... WP 0006-1

Hydraulic System Theory of Operation ..... WP 0007-1

Amphibious System Theory of Operation ..... WP 0008-1

Bilge Pumps and Drain Valves Theory of Operation ..... WP 0009-1

Fire Extinguisher System Theory of Operation ..... WP 0010-1

Chapter 2 – Operator Instructions

==========

Expendable Supplies and Materials List ..... WP 0123-1

Table 1. Expendable and Durable Items List ..... WP 0123-1

Foldout Figures

FO1. Wiring Schematic FP-1

FO2. Hydraulic Flow FP-3

Glossary GLOSSARY-1

Index INDEX-1

iii

FIGURE 29. Example of a table of contents with figures and tables listed.

Source: https://assist.dla.mil -- Downloaded: 2016-12-09T23:24Z
Check the source to verify that this is the current version before use.

MANUAL NUMBER

TABLE OF CONTENTS

Page No.
WP Sequence No.

How to Use This Manual vii

Chapter 1 – General Information, Description, and Theory of Operation

General Information ..... WP 0001-1

Equipment Description and Data ..... WP 0002-1

Location and Description of major Components ..... WP 0003-1

Theory of Operation ..... WP 0004-1

Chapter 2 – Operator Instructions

Description and Use of Controls and Indicators ..... WP 0005-1

Operation Under Usual Conditions ..... WP 0006-1

Operation Under Unusual Conditions ..... WP 0007-1

Emergency Procedures ..... WP 0008-1

Chapter 3 Operator Troubleshooting

Troubleshooting ..... WP 0009-1

Chapter 4 Operator Maintenance

Preventive Maintenance Checks and Services (PMCS) Introduction ..... WP 0010-1

PMCS ..... WP 0011-1

Disassemble ..... WP 0012-1

Assemble ..... WP 0013-1

Clean ..... WP 0014-1

Inspect ..... WP 0015-1

Lubricate ..... WP 0016-1

Chapter 5 Supporting Information

References ..... WP 0017-1

Components of End Item/Basic Issue Items ..... WP 0018-1

Additional Authorization Items ..... WP 0019-1

Expendable Supplies and Materials List ..... WP 0123-1

Glossary GLOSSARY-1

Index INDEX-1

FIGURE 30. Example of a table of contents without figures and tables listed.

Source: https://assist.dla.mil -- Downloaded: 2016-12-09T23:24Z
Check the source to verify that this is the current version before use.

MANUAL NUMBER

TABLE OF CONTENTS

		WP Sequence No.
Introduction		WP 0001
GROUP 00	20-mm Self-Propelled Air Defense Artillery Gun M163A1	WP 0002
GROUP 01	20-mm Air Defense Gun Cannon M168	WP 0003
GROUP 0101	Recoil Adapter Assembly	WP 0004
GROUP 0102	Breech Bolt Assembly	WP 0005
GROUP 0103	Center Clamp Assembly	WP 0006
GROUP 02	20-mm Gun Mount Assembly M157A1	WP 0007
GROUP 0201	Storage Battery	WP 0008
GROUP 0202	Ammunition Chute	WP 0009
GROUP 0203	Element Chute	WP 0010
GROUP 0204	Mount Component Assembly Detail Illustrations	WP 0011
GROUP 020401	Turret Drum Assembly	WP 0012
GROUP 020402	Azimuth Drive Assembly	WP 0013
GROUP 020403	Azimuth Drive Friction Clutch Assembly	WP 0014
GROUP 03	Automatic Lead Computing Sight M61	WP 0015
GROUP 0301	Motor and Electromagnet Assemblies	WP 0016
GROUP 0302	Combining Glass and Gimbal	WP 0017
GROUP 0303	Caging Device and Cable Assembly	WP 0018
GROUP 0304	Housing Support Assembly	WP 0019

==========

GROUP 09	Special Tools (Repair Parts)	WP 0045
GROUP 0901	Boresight	WP 0046
GROUP 0902	Storage Drum slot Gauge with Case	WP 0047
GROUP 99	Bulk Materials List	WP 0048
Special Tools List		WP 0049
Special Tools for field maintenance (Stowed with Case) Special Tools List		WP 0050
National Stock Number Index		WP 0051
Part Number Index		WP 0052
Reference Designator Index		WP 0053

iii

FIGURE 31. Example of a RPSTL table of contents.

Source: https://assist.dla.mil -- Downloaded: 2016-12-09T23:24Z
Check the source to verify that this is the current version before use.

INDEX

Subject — WP Sequence No.- Page No.

A

Accessory Section
Description ..... WP 0002-9
Inspection ..... WP 0045-3
Installation ..... WP 0045-10
Removal ..... WP 0045-1
Repair ..... WP 0045-6
Actuating Pilot Valve Leakage Check ..... WP 0011-10
Actuator, Compressor Bleed Valve
Assembly ..... WP 0012-5
Cleaning ..... WP 0012-2
Disassembly ..... WP 0012-1
Inspection ..... WP 0012-3
Repair ..... WP 0012-4
Adapter, Compressor Repair ..... WP 0022-9
Afterburner
Description ..... WP 0002-1
Inspection ..... WP 0047-1
Installation ..... WP 0048-5
Performer Limits ..... WP 0003-1
Repair ..... WP 0049-1
Removal ..... WP 0004-1
Troubleshooting ..... WP 0060-1
Air System ..... WP 0004-6
Airseal Installation ..... WP 0016-4
Anti-Icing Air System Description ..... WP 0002-2

B

Baffle and Spacer ..... WP 0034-7
Baffle Assembly ..... WP 0007-9
Bearings, Anti-friction
Balance ..... WP 0041-2
Cleaning ..... WP 0041-3
Inspection ..... WP 0041-2
Installation ..... WP 0042-3
Removal ..... WP 0042-1
Bleed Control Limit Curve ..... WP 0040-3
Breather Pressurizing Valve
Disassembly ..... WP 0017-1
Inspection ..... WP 0017-3
Installation ..... WP 0017-5

C

Carbon Seals
Cleaning ..... WP 0008-2
Inspection ..... WP 0008-1
Replacement ..... WP 0009-1
Combustion Chambers
Description ..... WP 0002-4

FIGURE 32. Example of an alphabetical index.

Source: https://assist.dla.mil -- Downloaded: 2016-12-09T23:24Z
Check the source to verify that this is the current version before use.

TM XX-XXXX-XXX-13&P

By Order of the Secretary of the Army:

MARK A. MILLEY
General, United States Army
Chief of Staff

Official:

GERALD B. O'KEEFE
Administrative Assistant to the
Secretary of the Army
0232913

To be distributed in accordance with the initial distribution number (IDN) 123456 requirements for TM X-XXXX-XXX-XX

FIGURE 33. <u>Example of an authentication block for the Army.</u>

Source: https://assist.dla.mil -- Downloaded: 2016-12-09T23:24Z
Check the source to verify that this is the current version before use.

TM XX-XXXX-XXX-13&P

By Order of the Secretary of the Army:

MARK A. MILLEY
General, United States Army
Chief of Staff

Official:

GERALD B. O'KEEFE
Administrative Assistant to the
Secretary of the Army
034567

By Order of the Secretary of the Air Force:

Official:

DONALD J. HOFFMAN
General, United States Air Force
Commander, AFMC

NORTON A. SWARTZ
General, United States Air Force
Chief of Staff

By Order of the Secretary of the Navy:

WALTER H. CANTRELL
Rear Admiral, United States Navy
Commander, Space and Naval Warfare
Systems Command

By Order of the Marine Corps:

G. W. TAYLOR
Product Group Director, PG-15
Ground Transportation Engineer Systems
Marine Corps Systems Command

Army Distribution:

To be distributed in accordance with the initial distribution number (IDN) 256886 requirements for TM 9-6115-729-10.

Marine Corps Distribution:

To be distributed in accordance with PCN 184 115980 02.

FIGURE 34. Example of an authentication block for Joint Services.

Source: https://assist.dla.mil -- Downloaded: 2016-12-09T23:24Z
Check the source to verify that this is the current version before use.

This page intentionally left blank.

Source: https://assist.dla.mil -- Downloaded: 2016-12-09T23:24Z
Check the source to verify that this is the current version before use.

APPENDIX A
CONTENT SELECTION MATRIXES

A.1 SCOPE.

A.1.1 Scope. This appendix includes the technical content requirements for the preparation of technical manuals for all major weapon systems and all types of equipment, including test and support equipment. This appendix is a mandatory part of this standard. The information contained herein is intended for compliance. The requirements are applicable for all maintenance levels/classes through overhaul (depot) including DMWRs and NMWRs.

A.2 APPLICABLE DOCUMENTS.

This section is not applicable to this appendix.

A.3 DEFINITIONS.

This section is not applicable to this appendix.

A.4 GENERAL REQUIREMENTS.

This section is not applicable to this appendix.

A.5 DETAILED REQUIREMENTS.

A.5.1 Tailoring requirements for technical manuals. Tailoring of the technical content requirements contained in APPENDIX B through N is provided in the content matrix tables, TABLE A-II through TABLE A-XXI /The tables list all applicable technical content requirements for the development of the following page-based TMs. There are two sample filled-out matrixes (single maintenance level/class and multiple maintenance levels/classes) provided in MIL-HDBK-1222. Copies of the applicable tables will be completed and added as an attachment to the Document Summary List of the contract.

A.5.2 Publication Titles.

a. All page-based publications prepared in accordance with this standard shall have a title in accordance with TABLE A-I
b. If your RPSTL information contains Depot parts/special tools, the title shall indicate this (e.g., Field and Sustainment Maintenance Manual with Repair Parts and Special Tools List including Depot Repair Parts and Special Tools).

TABLE A-I. Publication type and title with associated context matrix table.

PUB TYPE	TITLE	APPLICABLE TABLE
EXCLUDING AMMUNITION		
-10	Operator Manual for *insert system*	TABLE A-II
-13	Operator and Field Maintenance Manual *insert system*	TABLE A-II

Source: https://assist.dla.mil -- Downloaded: 2016-12-09T23:24Z
Check the source to verify that this is the current version before use.

TABLE A-I. Publication type and title with associated context matrix table - Continued.

PUB TYPE	TITLE	APPLICABLE TABLE
-13&P	Operator and Field Maintenance Manual including Repair Parts and Special Tools List for *insert system*	TABLE A-II
-14	Operator, Field, and Sustainment Maintenance Manual for *insert system*	TABLE A-II
-14&P	Operator, Field and Sustainment Maintenance Manual including Repair Parts and Special Tools List for *insert system*	TABLE A-II
-23	Field Maintenance Manual for *insert system*	TABLE A-IV (Non-aviation) TABLE A-V (Aviation)
-23&P	Field Maintenance Manual including Repair Parts and Special Tools List for *insert system*	TABLE A-IV (Non-aviation) TABLE A-V (Aviation)
-23P	Field Maintenance Repair Parts and Special Tools List for *insert system*	TABLE A-VI
-24	Field and Sustainment Maintenance Manual for *insert system*	TABLE A-IV (Non-aviation) TABLE A-V (Aviation)
-24&P	Field and Sustainment Maintenance Manual including Repair Parts and Special Tools List for *insert system*	TABLE A-IV (Non-aviation) TABLE A-V (Aviation)
-24P	Field and Sustainment Maintenance Repair Parts and Special Tools List for *insert system*	TABLE A-VI
-40	Sustainment Maintenance Manual for *insert system*	TABLE A-III
-40&P	Sustainment Maintenance Manual including Repair Parts and Special Tools List for *insert system*	TABLE A-III
-40P	Sustainment Maintenance Repair Parts and Special Tools List for *insert system*	TABLE A-VI
BDAR	*Insert Maintenance level* Battle Damage Assessment and Repair for *insert system*	TABLE A-XVI
DMWR	Depot Maintenance Work Requirement for *insert system*	TABLE A-VII
DMWR w/RPSTL	Depot Maintenance Work Requirement including Repair Parts and Special Tools List for *insert system*	TABLE A-VII

Source: https://assist.dla.mil -- Downloaded: 2016-12-09T23:24Z
Check the source to verify that this is the current version before use.

TABLE A-I. Publication type and title with associated context matrix table - Continued.

PUB TYPE	TITLE	APPLICABLE TABLE
DMWR Containing Overhaul Standards	Depot Maintenance Work Requirement containing National Maintenance Repair Standards for *insert system*	TABLE A-VIII
DMWR Containing Overhaul Standards w/RPSTL	Depot Maintenance Work Requirement containing National Maintenance Repair Standards including Repair Parts and Special Tools List for *insert system*	TABLE A-VIII
NMWR	National Maintenance Work Requirement for *insert system*	TABLE A-VII
NMWR w/RPSTL	National Maintenance Work Requirement including Repair Parts and Special Tools List for *insert system*	TABLE A-VII
Aircraft Trouble-shooting	Aviation Field Troubleshooting Manual for *insert system*	TABLE A-IX
	Aviation Sustainment Troubleshooting Manual for *insert system*	TABLE A-IX
	Aviation Field and Sustainment Troubleshooting Manual for *insert system*	TABLE A-IX
Aircraft PMD	Preventive Maintenance Daily Manual for *insert system*	TABLE A-X
Aircraft PMS	Preventive Maintenance Services Manual for *insert system*	TABLE A-X
Aircraft PMI	Phased Maintenance Inspection Checklist for *insert system*	TABLE A-XI
Destruction TMs	Destruction of Equipment to Prevent Enemy Use for *insert system*	TABLE A-XV
Lubrication Orders	Lubrication Orders for *insert system*	TABLE A-XVIII
PMC	Preventive Maintenance Checklists for *insert system*	TABLE A-XVII
SUM	Software Users Manual for *insert system*	TABLE A-XX
SAM	Software Administrators Manual for *insert system*	TABLE A-XX

Source: https://assist.dla.mil -- Downloaded: 2016-12-09T23:24Z
Check the source to verify that this is the current version before use.

TABLE A-I. Publication type and title with associated context matrix table - Continued.

PUB TYPE	TITLE	APPLICABLE TABLE
SUM/SAM	Software Users and software administrators manual for *insert system*	TABLE A-XX
General Maintenance Manual	General Maintenance Manual for *insert system*	TABLE A-XX1
	AMMUNITION	
-10	Operator Manual for *insert system*	TABLE A-XII
-13	Operator and Field Maintenance Manual for *insert system*	TABLE A-XII
-13&P	Operator and Field Maintenance Manual including Repair Parts and Special Tools List for *insert system*	TABLE A-XII
-14	Operator, Field, and Sustainment Maintenance Manual for *insert system*	TABLE A-XII
-14&P	Operator, Field, and Sustainment Maintenance Manual including Repair Parts and Special Tools List for *insert system*	TABLE A-XII
-23	Field Maintenance Manual for *insert system*	TABLE A-XIV
-23&P	Field Maintenance Manual including Repair Parts and Special Tools List for *insert system*	TABLE A-XIV
-24	Field and Sustainment Maintenance Manual for *insert system*	TABLE A-XIV
-24&P	Field and Sustainment Maintenance Manual including Repair Parts and Special Tools List for *insert system*	TABLE A-XIV
-40	Sustainment Maintenance Manual for *insert system*	TABLE A-XIII
-40&P	Sustainment Maintenance Manual including Repair Parts and Special Tools List for *insert system*	TABLE A-XIII
DMWR	Depot Maintenance Work requirement Maintenance/Demilitarization of *insert system*	TABLE A-XIX

Source: https://assist.dla.mil -- Downloaded: 2016-12-09T23:24Z
Check the source to verify that this is the current version before use.

A.5.3 Technical content tables. TABLE A-II through TABLE A-XXI shall be used to tailor the content requirements based on the equipment and maintenance levels/classes. They serve as a checklist for the technical content requirements. The tables indicate which content is required by this standard and shall be included as indicated by "R", which content is prohibited by this standard and shall not be included as indicated by "P", and content which needs to be assessed by the acquiring activity as indicated with gray shading.

A.5.3.1 Intended use. First, determine the types of TMs required for each acquisition and then duplicate or download (available at https://www.logsa.army.mil/mil40051/menu.cfm) the table(s) that contain the content requirements for those types of TMs. Indicate the types of TMs needed by filling in the blank after "Requirements Matrix for" at the top of each matrix.

a. For each type of TM selected, indicate in the empty shaded blocks the "TM" content desired by entering an "R" for "REQUIRED" content, a "NR" for content that is "NOT REQUIRED," or an "AR" for content that is "AS REQUIRED." All blocks for the selected TM type shall be filled in. Further guidance is provided below.

   (1) For tables with multiple columns, allowing a choice of TM type (e.g., -10, -13, -14), unused columns must either be removed during the editing process, or blacked out to indicate that manual type is not required. Rows in the matrix tables shall not be removed or added.

   (2) Blocks that contain an "R" are content required by this standard and shall not be changed.

   (3) Blocks that contain a "P" are content prohibited by this standard and shall not be changed.

   (4) Information not included in a specific table is prohibited for that type of TM and shall not be included.

b. The blocks that are shaded are content items where a decision must be made by the acquiring activity whether they are required to support the equipment. The blocks that are shaded shall be filled in with an "R," "NR," or "AR."

   (1) If a decision on a shaded item cannot be made, the shaded item shall be marked with an "AR."

   (2) When a decision has been made, the shaded item shall be marked with a "NR" or "R."

   (3) Many shaded items identify a parent (e.g., manufactured items) that when selected must contain certain content. Shaded cells with an "R" or a "P" identify requirements that must be followed when the parent item is selected. If the parent option is marked as "R" or "P", these "R's" and "P's" cannot be changed. If a parent module is determined not to be needed and is marked with a "NR", then the children are also not required and should be marked as such.

Source: https://assist.dla.mil -- Downloaded: 2016-12-09T23:24Z
Check the source to verify that this is the current version before use.

c. The notation “Chapter X” in the matrix means that, if required, at least one of these chapters shall be in the TM. A TM may contain more than one of Chapter X. The editable version of the matrixes provided at the LOGSA Web site may be edited to add in the extra chapters needed. If more than one of these chapters is needed, then a required content item listed within the “Chapter X” matrix portion shall be in one of the chapters and may or may not be in the others. For example, if there are more than two “Maintenance Instructions” chapters, only one of them needs a “PMCS Work Package" but there may be a PMCS work package in more than one chapter (e.g., one for operator level in the operator maintenance chapter and one for maintainer maintenance in that chapter).” For manuals with multiple levels of maintenance (e.g., -13, -14, -24), you may have chapters for each level of maintenance covered in the manual. See MIL-HDBK-1222 for examples of filled in matrixes and TM outlines for manuals with one level of maintenance and for manuals with multiple levels of maintenance. Refer to 5.2.4 for more requirements related to combined manuals.

d. An “R” at the chapter level means the chapter is required. It does not mean everything below it must be included. Individual items that can be included with the chapter carry their own marking (“R”, “P”, or “AR”).

A.5.4 Acquisition requirements. The properly executed Technical Manual Content Selection Matrix table becomes contractually binding when it is made part of the contract, statement of work, or any other contractual instrument.

Source: https://assist.dla.mil -- Downloaded: 2016-12-09T23:24Z
Check the source to verify that this is the current version before use.

TABLE A-II. Operators and combined operator/maintenance requirements matrix for _____.

TM Content	-10	-13 -13&P	-14 -14&P	MIL-STD-40051-2C Reference	Element Name
FRONT MATTER	**R**	**R**	**R**	5.2.1	**<paper.frnt>**
Front cover	R	R	R	5.2.1.1	**<frntcover>**
(MC) Promulgation letter				5.2.1.3	**<promulgation>**
Warning summary				5.2.1.4	**<warnsum>**
Change transmittal page				5.2.1.5	**<chgsheet>**
List of effective pages/work packages	R	R	R	5.2.1.6	**<loepwp>**
Title page	R	R	R	5.2.1.7	**<titleblk>**
Table of contents	R	R	R	5.2.1.9	**<contents>**
How to use this manual	R	R	R	5.2.1.10	**<howtouse>**
CHAPTER 1. GENERAL INFORMATION, EQUIPMENT DESCRIPTION, AND THEORY OF OPERATION	**R**	**R**	**R**	APPENDIX B	**<gim>**
GENERAL INFORMATION WORK PACKAGE	R	R	R	B.5.2	**<ginfowp>**
Scope	R	R	R	B.5.2.3	**<scope>**
Maintenance forms, records, and reports	R	R	R	B.5.2.4	**<mfrr>**
Reporting Equipment Improvement Recommendations (EIR)	R	R	R	B.5.2.5	**<eir>**
Hand Receipt (HR) manuals				B.5.2.6	**<handreceipt>**
Corrosion Prevention and Control (CPC)	R	R	R	B.5.2.7	**<cpcdata>**
Ozone Depleting Substances (ODS)				B.5.2.8	**<odsdata>**
Destruction of Army materiel to prevent enemy use	R	R	R	B.5.2.9	**<destructmat>**
Preparation for storage or shipment	R	R	R	B.5.2.10	**<pssref>**
Transportability guidance	R	R	R	B.5.2.11	**<transportability>**
Warranty information				B.5.2.12	**<wrntyref>**
Nomenclature cross-reference list	R	R	R	B.5.2.13	**<nomenreflist>**
List of abbreviations/acronyms	R	R	R	B.5.2.14	**<loa>**
Quality of material	P	R	R	B.5.2.16	**<qual.mat.info>**
Safety, care, and handling				B.5.2.17	**<sftyinfo>**
Nuclear hardness				B.5.2.18	**<hcp>**
Calibration				B.5.2.19	**<calref>**
Item unique identification (IUID)				B.5.2.20	**<iuid>**
Supporting information for repair parts, special tools, TMDE, and support equipment	P			B.5.2.27	**<supdata>**

Source: https://assist.dla.mil -- Downloaded: 2016-12-09T23:24Z
Check the source to verify that this is the current version before use.

TABLE A-II. Operators and combined operator/maintenance requirements matrix for _____.

TM Content	-10	-13 -13&P	-14 -14&P	MIL-STD-40051-2C Reference	Element Name
Copyright credit line				B.5.2.28	**<copyrt>**
EQUIPMENT DESCRIPTION AND DATA WORK PACKAGE	R	R	R	B.5.3	**<descwp>**
Equipment characteristics, capabilities, and features	R	R	R	B.5.3.3	**<eqpinfo>**
Location and description of major components	R	R	R	B.5.3.4	**<locdesc>**
Equipment differences	R	R	R	B.5.3.5	**<eqpdiff>**
Equipment data	R	R	R	B.5.3.6	**<eqpdata>**
THEORY OF OPERATION WORK PACKAGE	R	R	R	B.5.4	**<thrywp>**
CHAPTER X. OPERATOR INSTRUCTIONS	**R**	**R**	**R**	APPENDIX C	**<opim>**
DESCRIPTION AND USE OF OPERATOR CONTROLS AND INDICATORS WORK PACKAGE	R	R	R	C.5.2.2.1	**<ctrlindwp>**
OPERATION UNDER USUAL CONDITIONS WORK PACKAGE	R	R	R	C.5.2.2.2	**<opusualwp>**
Operation under usual conditions task	R	R	R	C.5.2.2.2.3	**<opertsk>**
Security measures for electronic data				C.5.2.2.2.3.1	**<secref>**
Siting requirements				C.5.2.2.2.3.2	**<site>**
Shelter requirements				C.5.2.2.2.3.3	**<shelter>**
Assembly and preparation for use				C.5.2.2.2.3.4	**<prepforuse>**
Initial adjustments, before use and self-test				C.5.2.2.2.3.5	**<initial>**
Operating procedures	R	R	R	C.5.2.2.2.3.6	**<oper>**
Operating auxiliary equipment				C.5.2.2.2.3.8	**<operaux>**
Preparation for movement				C.5.2.2.2.3.9	**<prepmove>**
Decals and instruction plates				C.5.2.2.2.3.10	**<instructplt>**
OPERATION UNDER UNUSUAL CONDITIONS WORK PACKAGE	R	R	R	C.5.2.2.3	**<opunuwp>**
Security measures for electronic data				C.5.2.2.3.3.1	**<secref>**
Unusual environment/weather	R	R	R	C.5.2.2.3.3.2	**<unusualenv>**
Fording and swimming				C.5.2.2.3.3.3	**<fording>**
Interim Chemical, Biological, Radiological, Nuclear and Explosives (CBRNE) decontamination procedures				C.5.2.2.3.3.4	**<decon>**
Jamming and Electronic Countermeasures (ECM) procedures				C.5.2.2.3.3.5	**<ecm>**

Source: https://assist.dla.mil -- Downloaded: 2016-12-09T23:24Z
Check the source to verify that this is the current version before use.

TABLE A-II. Operators and combined operator/maintenance requirements matrix for _____.

TM Content	-10	-13 -13&P	-14 -14&P	MIL-STD-40051-2C Reference	Element Name
Degraded operation procedures				C.5.2.2.3.3.6	**<degraded>**
Decals and instruction plates				C.5.2.2.3.3.7	**<instructplt>**
EMERGENCY WORK PACKAGE				C.5.2.2.4	**<emergencywp>**
STOWAGE AND DECAL/DATA PLATE GUIDE WORK PACKAGE				C.5.2.2.5	**<stowagewp>**
ON-VEHICLE EQUIPMENT LOADING PLAN WORK PACKAGE				C.5.2.2.6	**<eqploadwp>**
CHAPTER X. TROUBLESHOOTING MASTER INDEX				**APPENDIX D** D.5.4.4	**<tim> <masterindexcategory>**
TROUBLESHOOTING INDEX WORK PACKAGE				D.5.5.5	**<tsindxwp>**
CHAPTER X. TROUBLESHOOTING PROCEDURES ***NOTE*** *The notation (*) indicates that at least one of the these content items shall be included*		**R**	**R**	APPENDIX D D.5.4.2	**<tim> <troublecategory>**
INTRODUCTION WORK PACKAGE				D.5.5.3	**<tsintrowp>**
TROUBLESHOOTING INDEX WORK PACKAGE				D.5.5.5	**<tsindxwp>**
**OPERATIONAL CHECKOUT WORK PACKAGES*				D.5.5.8.3	**<opcheckwp>**
**TROUBLESHOOTING WORK PACKAGES*				D.5.5.8.4	**<tswp>**
**COMBINED OPERATIONAL CHECKOUT AND TROUBLESHOOTING WORK PACKAGES*				D.5.5.8.5	**<opcheck-tswp>**
CHAPTER X. PMCS MAINTENANCE INSTRUCTIONS ***NOTE*** *PMCS may be in its own chapter or may be combned with other maintenance work packages in a maintenance chapter but not both places.*				APPENDIX E E.5.2.1	**<mim> <pmcscategory>**
PMCS INTRODUCTION WORK PACKAGE	**R**	**R**	**R**	E.5.3.4.1	**<pmcsintrowp>**
PMCS, INCLUDING LUBRICATION INSTRUCTIONS, WORK PACKAGE	**R**	**R**	**R**	E.5.3.4.2	**<pmcswp>**

Source: https://assist.dla.mil -- Downloaded: 2016-12-09T23:24Z
Check the source to verify that this is the current version before use.

TABLE A-II. Operators and combined operator/maintenance requirements matrix for _____.

TM Content	-10	-13 -13&P	-14 -14&P	MIL-STD-40051-2C Reference	Element Name
CHAPTER X. MAINTENANCE INSTRUCTIONS ***NOTE*** *PMCS is required as a minimum in one maintenance chapter. PMCS may be in its own chapter or may be combined with other maintenance work packages in a maintenance chapter but not both places.*	**R**	**R**	**R**	APPENDIX E E.5.2.2 E.5.2.3	**<mim>** **<maintenancepmcscategory>** **<maintenancecategory>**
SERVICE UPON RECEIPT WORK PACKAGE (MAINTAINER LEVEL ONLY)				E.5.3.2	**<surwp>**
Service upon receipt tasks				E.5.3.2.3	**<surtsk>**
Siting				E.5.3.2.3.1	**<siting>**
Shelter requirements				E.5.3.2.3.2	**<shltr>**
Service upon receipt of materiel				E.5.3.2.3.3	**<surmat>**
Installation instructions				E.5.3.2.3.4	**<install>**
Preliminary servicing of equipment				E.5.3.2.3.5	**<preserv>**
Preliminary checks and adjustment of equipment				E.5.3.2.3.6	**<prechkadj>**
Preliminary calibration of equipment				E.5.3.2.3.7	**<precal>**
Circuit alignment				E.5.3.2.3.8	**<calign>**
Ammunition markings				E.5.3.2.3.9.1	**<mark>**
Classification of defects				E.5.3.2.3.9.2	**<ammo.defect>**
Ammunition handling				E.5.3.2.3.9.3	**<ammo.handling>**
Procedures to activate ammunition				E.5.3.2.3.9.4	**<arm>**
Additional maintenance task				E.5.3.2.3.10	**<other.surtsk>**
Follow-on maintenance				E.5.3.2.3.11	**<followon.maintsk>**
EQUIPMENT/USER FITTING INSTRUCTIONS WORK PACKAGE				E.5.3.3	**<perseqpwp>**
PMCS INTRODUCTION WORK PACKAGE	R			E.5.3.4.1	**<pmcsintrowp>**
PMCS WORK PACKAGE	R			E.5.3.4.2	**<pmcswp>**
MAINTENANCE WORK PACKAGES		R	R	E.5.3.5	**<maintwp>**
Maintenance tasks		R	R	E.5.3.5.3	**<maintsk>**
Inspect				E.5.3.5.3.2	**<inspect>**
Test				E.5.3.5.3.3	**<test>**
Service				E.5.3.5.3.4	**<service>**
Adjust				E.5.3.5.3.5	**<adjust>**
Align				E.5.3.5.3.6	**<align>**

Source: https://assist.dla.mil -- Downloaded: 2016-12-09T23:24Z
Check the source to verify that this is the current version before use.

TABLE A-II. Operators and combined operator/maintenance requirements matrix for _____.

TM Content	-10	-13 -13&P	-14 -14&P	MIL-STD-40051-2C Reference	Element Name
Calibrate				E.5.3.5.3.7	**<calibration>**
Remove				E.5.3.5.3.8	**<remove>**
Install				E.5.3.5.3.9	**<install>**
Replace				E.5.3.5.3.10	**<replace>**
Repair				E.5.3.5.3.11	**<repair>**
Paint				E.5.3.5.3.12	**<paint>**
Overhaul	P			E.5.3.5.3.13	**<overhaul>**
Rebuild	P			E.5.3.5.3.14	**<rebuild>**
Lubricate				E.5.3.5.3.15	**<lube>**
Mark				E.5.3.5.3.16	**<mark>**
Pack				E.5.3.5.3.17	**<pack>**
Unpack				E.5.3.5.3.18	**<unpack>**
Preserve				E.5.3.5.3.19	**<preservation>**
Prepare for use				E.5.3.5.3.20	**<prepforuse>**
Assemble				E.5.3.5.3.21	**<assem>**
Disassemble				E.5.3.5.3.22	**<disassem>**
Clean				E.5.3.5.3.23	**<clean>**
Nondestructive inspection				E.5.3.5.3.24	**<ndi>**
Radio interference suppression				E.5.3.5.3.25	**<ris>**
Place in service				E.5.3.5.3.26	**<pis>**
Towing				E.5.3.5.3.27	**<tow>**
Jacking				E.5.3.5.3.28	**<jack>**
Parking				E.5.3.5.3.29	**<park>**
Mooring				E.5.3.5.3.30	**<moor>**
Covering				E.5.3.5.3.31	**<cover>**
Hoisting				E.5.3.5.3.32	**<hoist>**
Sling loading				E.5.3.5.3.33	**<sling>**
External power				E.5.3.5.3.34	**<extpwr>**
Preparation for storage	R	R	R	E.5.3.5.3.35	**<prepstore>**
Preparation for shipment	R	R	R	E.5.3.5.3.36	**<prepship>**
Transport	R	R	R	E.5.3.5.3.37	**<transport>**
Arm				E.5.3.5.3.38	**<arm>**
Load				E.5.3.5.3.39	**<load>**
Unload				E.5.3.5.3.40	**<unload>**
Install peripheral device				E.5.3.5.3.41	**<installperdev>**

Source: https://assist.dla.mil -- Downloaded: 2016-12-09T23:24Z
Check the source to verify that this is the current version before use.

TABLE A-II. Operators and combined operator/maintenance requirements matrix for _____.

TM Content	-10	-13 -13&P	-14 -14&P	MIL-STD-40051-2C Reference	Element Name
Uninstall peripheral device				E.5.3.5.3.42	**<uninstallperdev>**
Upgrade/patch software				E.5.3.5.3.43	**<upgrade>**
Configure software				E.5.3.5.3.44	**<configure>**
Debug software				E.5.3.5.3.45	**<debug>**
Additional maintenance task				E.5.3.5.3.46	**<other.maintsk>**
Follow-on maintenance				E.5.3.5.3.47	**<followon.maintsk>**
GENERAL MAINTENANCE WORK PACKAGE				E.5.3.7	**<gen.maintwp>**
LUBRICATION INSTRUCTIONS WORK PACKAGE				E.5.3.8	**<lubewp>**
ILLUSTRATED LIST OF MANUFACTURED ITEMS WORK PACKAGE (MAINTAINER LEVEL AND ABOVE)	P			E.5.3.10	
Illustrated list of manufactured items introduction work package	P	R	R	E.5.3.10.1	**<manu_items_introwp>**
Manufacturing procedures work package	P	R	R	E.5.3.10.2	**<manuwp>**
TORQUE LIMITS WORK PACKAGE (MAINTAINER LEVEL AND ABOVE)	P			E.5.3.11	**<torquewp>**
WIRING DIAGRAMS WORK PACKAGE (MAINTAINER LEVEL AND ABOVE)	P			E.5.3.12	**<wiringwp>**
CHAPTER X. AUXILIARY EQUIPMENT MAINTENANCE INSTRUCTIONS				APPENDIX E E.5.2.6	**<mim> <auxiliarycategory>**
AUXILIARY EQUIPMENT MAINTENANCE WORK PACKAGE				E.5.3.14	**<auxeqpwp>**
ILLUSTRATED LIST OF MANUFACTURED ITEMS WORK PACKAGE (MAINTAINER LEVEL AND ABOVE)	P			E.5.3.10	
Illustrated list of manufactured items introduction work package	P	R	R	E.5.3.10.1	**<manu_items_introwp>**
Manufacturing procedures work package	P	R	R	E.5.3.10.2	**<manuwp>**
TORQUE LIMITS WORK PACKAGE (MAINTAINER LEVEL AND ABOVE)	P			E.5.3.11	**<torquewp>**
WIRING DIAGRAMS WORK PACKAGE (MAINTAINER LEVEL AND ABOVE)	P			E.5.3.12	**<wiringwp>**
CHAPTER X. AMMUNITION MAINTENANCE INSTRUCTIONS				APPENDIX E E.5.2.7	**<mim> <ammunitioncategory>**
AMMUNITION MAINTENANCE WORK PACKAGE				E.5.3.15.1	**<ammowp>**

Source: https://assist.dla.mil -- Downloaded: 2016-12-09T23:24Z
Check the source to verify that this is the current version before use.

TABLE A-II. Operators and combined operator/maintenance requirements matrix for _____.

TM Content	-10	-13 -13&P	-14 -14&P	MIL-STD-40051-2C Reference	Element Name
AMMUNITION MARKING INFORMATION WORK PACKAGE				E.5.3.15.2	**<ammo.markingwp>**
FOREIGN AMMUNITION (NATO) WORK PACKAGE				E.5.3.15.3	**<natowp>**
CHAPTER X. DESTRUCTION OF EQUIPMENT TO PREVENT ENEMY USE *NOTE* *If a separate destruction of material manual is not developed for this equipment, then the destruction chapter must be included.*				APPENDIX H	**<dim>**
DESTRUCTION PROCEDURES INTRODUCTION WORK PACKAGE	R	R	R	H.5.3	**<destruct-introwp>**
Authority to destroy	R	R	R	H.5.3.3	**<authorize_to_destroy>**
Reporting destruction	R	R	R	H.5.3.4	**<report_destruct>**
General destruction information	R	R	R	H.5.3.5	**<general_destruct_info>**
Degree of destruction	R	R	R	H.5.3.6	**<degree_of_destruct>**
Essential components and spare parts				H.5.3.7	**<component_spares>**
DESTRUCTION PROCEDURES WORK PACKAGE	R	R	R	H.5.4	**<destruct-materialwp>**
Parts list				H.5.4.3	**<essential_spares>**
Specific destruction procedures	R	R	R	H.5.4.4	**<proc>**
SOFTWARE INFORMATION				Appendix M	**<soim> <softwarecategory>**
SOFTWARE GENERAL INFORMATION WORK PACKAGE	R	R	R	M.5.3.1	**<softginfowp>**
System Overview	R	R	R	M.5.3.1.6	**<softsysover>**
Document Overview	R	R	R	M.5.3.1.7	**<softdocover>**
SOFTWARE SUMMARY WORK PACKAGE	R	R	R	M.5.3.2	**<softsumwp>**
SOFTWARE EFFECTIVITY WORK PACKAGE				M.5.3.3	**<softeffectwp>**
DIFFERENCES BETWEEN SOFTWARE VERSIONS WORK PACKAGE				M.5.3.4	**<softdiffversionwp>**
FEATURES AND CAPAIBLITIES WORK PACKAGE	R	R	R	M.5.4.1	**<softfeaturescapwp>**
SCREEN DISPLAYS WORK PACKAGE	R	R	R	M.5.4.2	**<softscreendisplaywp>**
MENUS/DIRECTORIES WORK PACKAGE	R	R	R	M.5.4.3	**<softmenuwp>**

Source: https://assist.dla.mil -- Downloaded: 2016-12-09T23:24Z
Check the source to verify that this is the current version before use.

TABLE A-II. Operators and combined operator/maintenance requirements matrix for _____.

TM Content	-10	-13 -13&P	-14 -14&P	MIL-STD-40051-2C Reference	Element Name
TOOLS AND BUTTONS WORK PACKAGES	R	R	R	M.5.4.4	**<softtoolswp>**
SECURITY AND PRIVACY PROCEDURES WORK PACKAGE	R	R	R	M.5.5.1	**<softsecprivwp>**
SUPERVISORY CONTROLS WORK PACKAGE		R	R	M.5.5.2	**<softsuperctrlswp>**
POWERUP/STARTUP AND POWERDOWN/SHUTDOWN PROCEDURES WORK PACKAGE	R	R	R	M.5.5.3	**<softpowerupwp>**
ACCESSING/EXITING SOFTWARE WORK PACKAGE	R	R	R	M.5.5.4	**<softaccesswp>**
KEY COMMANDS WORK PACKAGE				M.5.5.5	**<softkeycmdswp>**
PROCESSES AND COMMANDS WORK PACKAGE				M.5.5.6	**<softproccmdwp>**
USER INTERFACE WORK PACKAGE				M.5.5.7	**<softguiwp>**
SOFTWARE OPERATING CONVENTIONS WORK PACKAGE				M.5.5.8	**<softopconventionswp>**
ADDITIONAL SOFTWARE OPERATION WP				M.5.5.9	**<softgenwp>**
MESSAGES WORK PACKAGE		R	R	M.5.6.3	**<softmessageswp>**
RECOVERY FROM ERRORS, MALFUNCTIONS, AND EMERGENCIES WORK PACKAGE				M.5.6.4	**<softerrorswp>**
CHAPTER X. **RPSTL** ***(-10, -13, -14)*** ***(-13&P, -14&P)***	**P** **P**	**P** **R**	**P** **R**	APPENDIX F	**<pim>**
INTRODUCTION WORK PACKAGE	P	R	R	F.5.3.5	**<introwp>**
REPAIR PARTS LIST WORK PACKAGE	P	R	R	F.5.3.6	**<plwp>**
REPAIR PARTS FOR SPECIAL TOOLS WORK PACKAGE	P			F.5.3.7	**<stl_partswp>**
KIT PARTS LIST WORK PACKAGE	P			F.5.3.8	**<kitswp>**
BULK ITEM WORK PACKAGE	P			F.5.3.9	**<bulk_itemswp>**
SPECIAL TOOLS LIST WORK PACKAGE	P			F.5.3.10	**<stlwp>**
NSN INDEX WORK PACKAGE	P	R	R	F.5.3.11.1	**<nsnindxwp>**
P/N INDEX WORK PACKAGE	P	R	R	F.5.3.11.2	**<pnindxwp>**
REFERENCE DESIGNATOR INDEX WORK PACKAGE	P			F.5.3.11.3	**<refdesindxwp>**

Source: https://assist.dla.mil -- Downloaded: 2016-12-09T23:24Z
Check the source to verify that this is the current version before use.

TABLE A-II. Operators and combined operator/maintenance requirements matrix for _____.

TM Content	-10	-13 -13&P	-14 -14&P	MIL-STD-40051-2C Reference	Element Name
CHAPTER X. SUPPORTING INFORMATION ***NOTE*** *Applicable supporting information work packages shall be arranged in the order in which they are presented here and numbered accordingly.*	**R**	**R**	**R**	APPENDIX G	**<sim>**
REFERENCES WORK PACKAGE	R	R	R	G.5.2	**<refwp>**
INTRODUCTION FOR NON-AVIATION TWO-LEVEL MAINTENANCE MAC WORK PACKAGE	P	R	R	G.5.3.1	**<macintrowp>**
MAC WORK PACKAGE (NON-AVIATION TWO-LEVEL)	P	R	R	G.5.3.3	**<macwp>**
COMPONENTS OF END ITEM (COEI) AND BASIC ISSUE ITEMS (BII) LISTS WORK PACKAGE	R	R	R	G.5.4	**<coeibiiwp>**
ADDITIONAL AUTHORIZATION LIST (AAL) WORK PACKAGE				G.5.5	**<aalwp>**
EXPENDABLE AND DURABLE ITEMS LIST WORK PACKAGE	R	R	R	G.5.7	**<explistwp>**
TOOL IDENTIFICATION LIST WORK PACKAGE	P	R	R	G.5.8	**<toolidwp>**
MANDATORY REPLACEMENT PARTS WORK PACKAGE	R	R	R	G.5.9	**<mrplwp>**
CRITICAL SAFETY ITEMS WORK PACKAGE	R	R	R	G.5.10	**<csi.wp>**
SUPPORT ITEMS WORK PACKAGE				G.5.11	**<supitemwp>**
ADDITIONAL SUPPORTING WORK PACKAGES				G.5.12	**<genwp>**
REAR MATTER	**R**	**R**	**R**	5.2.2	**<rear>**
Glossary				5.2.2.1	**<glossary>**
Alphabetical index				5.2.2.2	**<aindx>**
DA Form 2028	R	R	R	5.2.2.3	**<da2028>**
Authentication page	R	R	R	5.2.2.4	**<authent>**
Foldout pages				5.2.2.5	**<foldsect>**
Back cover	R	R	R	5.2.2.6	**<back>**

Legend

R - Required P - Prohibited Shaded - As Required

Source: https://assist.dla.mil -- Downloaded: 2016-12-09T23:24Z
Check the source to verify that this is the current version before use.

This page intentionally left blank.

Source: https://assist.dla.mil -- Downloaded: 2016-12-09T23:24Z
Check the source to verify that this is the current version before use.

TABLE A-III. Below depot sustainment requirements matrix for _____.

TM Content	-40 -40&P	MIL–STD–40051–2C Reference	Element Name
FRONT MATTER	**R**	5.2.1	**<paper.frnt>**
Front cover	R	5.2.1.1	**<frntcover>**
(MC) Promulgation letter		5.2.1.3	**<promulgation>**
Warning summary		5.2.1.4	**<warnsum>**
Change transmittal page		5.2.1.5	**<chgsheet>**
List of effective pages/work packages		5.2.1.6	**<loepwp>**
Title page	R	5.2.1.7	**<titleblk>**
Table of contents	R	5.2.1.9	**<contents>**
How to use this manual	R	5.2.1.10	**<howtouse>**
CHAPTER 1. GENERAL INFORMATION, EQUIPMENT DESCRIPTION, AND THEORY OF OPERATION	**R**	APPENDIX B	**<gim>**
GENERAL INFORMATION WORK PACKAGE	R	B.5.2	**<ginfowp>**
Scope	R	B.5.2.3	**<scope>**
Maintenance forms, records, and reports	R	B.5.2.4	**<mfrr>**
Reporting Equipment Improvement Recommendations (EIR)	R	B.5.2.5	**<eir>**
Hand Receipt (HR) manuals		B.5.2.6	**<handreceipt>**
Corrosion Prevention and Control (CPC)	R	B.5.2.7	**<cpcdata>**
Ozone Depleting Substances (ODS)		B.5.2.8	**<odsdata>**
Destruction of Army materiel to prevent enemy use	R	B.5.2.9	**<destructmat>**
Preparation for storage or shipment	R	B.5.2.10	**<pssref>**
Transportability guidance		B.5.2.11	**<transportaiblity>**
Warranty information		B.5.2.12	**<wrntyref>**
Nomenclature cross-reference list		B.5.2.13	**<nomenreflist>**
List of abbreviations	R	B.5.2.14	**<loa>**
Quality of material	R	B.5.2.16	**<qual.mat.info>**
Safety, care, and handling		B.5.2.17	**<sftyinfo>**
Nuclear hardness		B.5.2.18	**<hcp>**
Calibration		B.5.2.19	**<calref>**
Item unique identification (IUID)		B.5.2.20	**<iuid>**
Supporting information for repair parts, special tools, TMDE, and support equipment		B.5.2.27	**<supdata>**
Copyright credit line		B.5.2.28	**<copyrt>**

Source: https://assist.dla.mil -- Downloaded: 2016-12-09T23:24Z
Check the source to verify that this is the current version before use.

TABLE A-III. Below depot sustainment requirements matrix for _____.

TM Content	-40 -40&P	MIL–STD–40051–2C Reference	Element Name
EQUIPMENT DESCRIPTION AND DATA WORK PACKAGE	R	B.5.3	**<descwp>**
Equipment characteristics, capabilities, and features	R	B.5.3.3	**<eqpinfo>**
Location and description of major components	R	B.5.3.4	**<locdesc>**
Equipment differences	R	B.5.3.5	**<eqpdiff>**
Equipment data	R	B.5.3.6	**<eqpdata>**
THEORY OF OPERATION WORK PACKAGE	R	B.5.4	**<thrywp>**
CHAPTER X. TROUBLESHOOTING MASTER INDEX		APPENDIX D D.5.4.4	**<tim> <masterindexcategory> >**
TROUBLESHOOTING INDEX WORK PACKAGE		D.5.5.5	**<tsindxwp>**
CHAPTER X. TROUBLESHOOTING PROCEDURES ***NOTE*** *The notation (*) indicates that at least one of the these content items shall be included*	**R**	APPENDIX D D.5.4.2	**<tim> <troublecategory>**
INTRODUCTION WORK PACKAGE		D.5.5.3	**<tsintrowp>**
TROUBLESHOOTING INDEX WORK PACKAGE		D.5.5.5	**<tsindxwp>**
**OPERATIONAL CHECKOUT WORK PACKAGE*		D.5.5.8.3	**<opcheckwp>**
**TROUBLESHOOTING WORK PACKAGE*		D.5.5.8.4	**<tswp>**
**COMBINED OPERATIONAL CHECKOUT AND TROUBLESHOOTING WORK PACKAGE*		D.5.5.8.5	**<opcheck-tswp>**
CHAPTER X. PMCS MAINTENANCE INSTRUCTIONS ***NOTE*** *PMCS may be in its own chapter or may be combined with other maintenance work packages in a maintenance chapter but not both places.*		APPENDIX E E.5.2.1	**<mim> <pmcscategory>**
PMCS INTRODUCTION WORK PACKAGE	R	E.5.3.4.1	**<pmcsintrowp>**
PMCS, INCLUDING LUBRICATION INSTRUCTIONS, WORK PACKAGE	R	E.5.3.4.2	**<pmcswp>**

Source: https://assist.dla.mil -- Downloaded: 2016-12-09T23:24Z
Check the source to verify that this is the current version before use.

TABLE A-III. Below depot sustainment requirements matrix for _____.

TM Content	-40 -40&P	MIL–STD–40051–2C Reference	Element Name
CHAPTER X. **MAINTENANCE INSTRUCTIONS** ***NOTE*** *PMCS may be in its own chapter or may be combined with other maintenance work packages in a maintenance chapter but not both places.*	**R**	APPENDIX E E.5.2.2 E.5.2.3	**<mim>** **<maintenancepmcscategory>** **<maintenancecategory>**
SERVICE UPON RECEIPT WORK PACKAGE (MAINTAINER LEVEL ONLY)	P	E.5.3.2	**<surwp>**
EQUIPMENT/USER FITTING INSTRUCTIONS WORK PACKAGE)		E.5.3.3	**<perseqpwp>**
PMCS INTRODUCTION WORK PACKAGE		E.5.3.4.1	**<pmcsintrowp>**
PMCS WORK PACKAGE		E.5.3.4.2	**<pmcswp>**
MAINTENANCE WORK PACKAGES	R	E.5.3.5	**<maintwp>**
Maintenance tasks	R	E.5.3.5.3	**<maintsk>**
Inspect		E.5.3.5.3.2	**<inspect>**
Test		E.5.3.5.3.3	**<test>**
Service		E.5.3.5.3.4	**<service>**
Adjust		E.5.3.5.3.5	**<adjust>**
Align		E.5.3.5.3.6	**<align>**
Calibrate		E.5.3.5.3.7	**<calibration>**
Remove		E.5.3.5.3.8	**<remove>**
Install		E.5.3.5.3.9	**<install>**
Replace		E.5.3.5.3.10	**<replace>**
Repair		E.5.3.5.3.11	**<repair>**
Paint		E.5.3.5.3.12	**<paint>**
Overhaul		E.5.3.5.3.13	**<overhaul>**
Rebuild		E.5.3.5.3.14	**<rebuild>**
Lubricate		E.5.3.5.3.15	**<lube>**
Mark		E.5.3.5.3.16	**<mark>**
Pack		E.5.3.5.3.17	**<pack>**
Unpack		E.5.3.5.3.18	**<unpack>**
Preserve		E.5.3.5.3.19	**<preservation>**
Prepare for use		E.5.3.5.3.20	**<prepforuse>**
Assemble		E.5.3.5.3.21	**<assem>**
Disassemble		E.5.3.5.3.22	**<disassem>**
Clean		E.5.3.5.3.23	**<clean>**

Source: https://assist.dla.mil -- Downloaded: 2016-12-09T23:24Z
Check the source to verify that this is the current version before use.

TABLE A-III. Below depot sustainment requirements matrix for _____.

TM Content	-40 -40&P	MIL–STD–40051–2C Reference	Element Name
Nondestructive inspection		E.5.3.5.3.24	**<ndi>**
Radio interference suppression		E.5.3.5.3.25	**<ris>**
Place in service		E.5.3.5.3.26	**<pis>**
Towing		E.5.3.5.3.27	**<tow>**
Jacking		E.5.3.5.3.28	**<jack>**
Parking		E.5.3.5.3.29	**<park>**
Mooring		E.5.3.5.3.30	**<moor>**
Covering		E.5.3.5.3.31	**<cover>**
Hoisting		E.5.3.5.3.32	**<hoist>**
Sling loading		E.5.3.5.3.33	**<sling>**
External power		E.5.3.5.3.34	**<extpwr>**
Preparation for storage	R	E.5.3.5.3.35	**<prepstore>**
Preparation for shipment	R	E.5.3.5.3.36	**<prepship>**
Transport	R	E.5.3.5.3.37	**<transport>**
Arm		E.5.3.5.3.38	**<arm>**
Load		E.5.3.5.3.39	**<load>**
Unload		E.5.3.5.3.40	**<unload>**
Install peripheral device		E.5.3.5.3.41	**<installperdev>**
Uninstall peripheral device		E.5.3.5.3.42	**<uninstallperdev>**
Upgrade/patch software		E.5.3.5.3.43	**<upgrade>**
Configure software		E.5.3.5.3.44	**<configure>**
Debug software		E.5.3.5.3.45	**<debug>**
Additional maintenance task		E.5.3.5.3.46	**<other.maintsk>**
Follow-on maintenance		E.5.3.5.3.47	**<followon.maintsk>**
GENERAL MAINTENANCE WORK PACKAGE		E.5.3.7	**<gen.maintwp>**
LUBRICATION INSTRUCTIONS WORK PACKAGE		E.5.3.8	**<lubewp>**
ILLUSTRATED LIST OF MANUFACTURED ITEMS WORK PACKAGE		E.5.3.10	
Illustrated list of manufactured items introduction work package	**R**	E.5.3.10.1	**<manu_items_introwp>**
Manufacturing procedures work package	**R**	E.5.3.10.2	**<manuwp>**
TORQUE LIMITS WORK PACKAGE		E.5.3.11	**<torquewp>**
WIRING DIAGRAMS WORK PACKAGE		E.5.3.12	**<wiringwp>**

Source: https://assist.dla.mil -- Downloaded: 2016-12-09T23:24Z
Check the source to verify that this is the current version before use.

TABLE A-III. Below depot sustainment requirements matrix for _____.

TM Content	-40 -40&P	MIL–STD–40051–2C Reference	Element Name
CHAPTER X. AUXILIARY EQUIPMENT MAINTENANCE INSTRUCTIONS		APPENDIX E E.5.2.6	**<mim> <auxiliarycategory>**
AUXILIARY EQUIPMENT MAINTENANCE WORK PACKAGE		E.5.3.14	**<auxeqpwp>**
ILLUSTRATED LIST OF MANUFACTURED ITEMS WORK PACKAGE		E.5.3.10	
Illustrated list of manufactured items introduction work package	R	E.5.3.10.1	**<manu_items_introwp>**
Manufacturing procedures work package	R	E.5.3.10.2	**<manuwp>**
TORQUE LIMITS WORK PACKAGE		E.5.3.11	**<torquewp>**
WIRING DIAGRAMS WORK PACKAGE		E.5.3.12	**<wiringwp>**
CHAPTER X. AMMUNITION MAINTENANCE INSTRUCTIONS		APPENDIX E E.5.2.7	**<mim> <ammunitioncategory>**
AMMUNITION MAINTENANCE WORK PACKAGE		E.5.3.15.1	**<ammowp>**
AMMUNITION MARKING INFORMATION WORK PACKAGE		E.5.3.15.2	**<ammo.markingwp>**
FOREIGN AMMUNITION (NATO) WORK PACKAGE		E.5.3.15.3	**<natowp>**
CHAPTER X. DESTRUCTION OF EQUIPMENT TO PREVENT ENEMY USE *NOTE* *If a separate destruction of material manual is not developed for this equipment, then the destruction chapter must be included.*		APPENDIX H	**<dim>**
DESTRUCTION PROCEDURES INTRODUCTION WORK PACKAGE	R	H.5.3	**<destruct-introwp>**
Authority to destroy	R	H.5.3.3	**<authorize_to_destroy>**
Reporting destruction	R	H.5.3.4	**<report_destruct>**
General destruction information	R	H.5.3.5	**<general_destruct_info>**
Degree of destruction	R	H.5.3.6	**<degree_of_destruct>**
Essential components and spare parts		H.5.3.7	**<component_spares>**
DESTRUCTION PROCEDURES WORK PACKAGE	R	H.5.4	**<destruct-materialwp>**
Parts list		H.5.4.3	**<essential_spares>**
Specific destruction procedures	R	H.5.4.4	**<proc>**

Source: https://assist.dla.mil -- Downloaded: 2016-12-09T23:24Z
Check the source to verify that this is the current version before use.

TABLE A-III. Below depot sustainment requirements matrix for _____.

TM Content	-40 -40&P	MIL–STD–40051–2C Reference	Element Name
SOFTWARE INFORMATION		Appendix M	**<soim><softwarecategory>**
SOFTWARE GENERAL INFORMATION WORK PACKAGE	R	M.5.3.1	**<softginfowp>**
System Overview	R	M.5.3.1.6	**<softsysover>**
Document Overview	R	M.5.3.1.7	**<softdocover>**
SOFTWARE SUMMARY WORK PACKAGE	R	M.5.3.2	**<softsumwp>**
SOFTWARE EFFECTIVITY WORK PACKAGE		M.5.3.3	**<softeffectwp>**
DIFFERENCES BETWEEN SOFTWARE VERSIONS WORK PACKAGE		M.5.3.4	**<softdiffversionwp>**
FEATURES AND CAPAIBLITIES WORK PACKAGE	R	M.5.4.1	**<softfeaturescapwp>**
SCREEN DISPLAYS WORK PACKAGE	R	M.5.4.2	**<softscreendisplaywp>**
MENUS/DIRECTORIES WORK PACKAGE	R	M.5.4.3	**<softmenuwp>**
TOOLS AND BUTTONS WORK PACKAGES	R	M.5.4.4	**<softtoolswp>**
SECURITY AND PRIVACY PROCEDURES WORK PACKAGE	R	M.5.5.1	**<softsecprivwp>**
SUPERVISORY CONTROLS WORK PACKAGE		M.5.5.2	**<softsuperctrlswp>**
POWERUP/STARTUP AND POWERDOWN/SHUTDOWN PROCEDURES WORK PACKAGE	R	M.5.5.3	**<softpowerupwp>**
ACCESSING/EXITING SOFTWARE WORK PACKAGE	R	M.5.5.4	**<softaccesswp>**
KEY COMMANDS WORK PACKAGE		M.5.5.5	**<softkeycmdswp>**
PROCESSES AND COMMANDS WORK PACKAGE		M.5.5.6	**<softproccmdwp>**
USER INTERFACE WORK PACKAGE		M.5.5.7	**<softguiwp>**
SOFTWARE OPERATING CONVENTIONS WORK PACKAGE		M.5.5.8	**<softopconventionswp>**
ADDITIONAL SOFTWARE OPERATION WP		M.5.5.9	**<softgenwp>**
MESSAGES WORK PACKAGE		M.5.6.3	**<softmessageswp>**
RECOVERY FROM ERRORS, MALFUNCTIONS, AND EMERGENCIES WORK PACKAGE		M.5.6.4	**<softerrorswp>**
CHAPTER X. **RPSTL** ***(-10, -13, -14)*** ***(-13&P, -14&P)***	 **P** **P**	APPENDIX F	**<pim>**
INTRODUCTION WORK PACKAGE	P	F.5.3.5	**<introwp>**
REPAIR PARTS LIST WORK PACKAGE	P	F.5.3.6	**<plwp>**

Source: https://assist.dla.mil -- Downloaded: 2016-12-09T23:24Z
Check the source to verify that this is the current version before use.

TABLE A-III. Below depot sustainment requirements matrix for _____.

TM Content	-40 -40&P	MIL–STD–40051–2C Reference	Element Name
REPAIR PARTS FOR SPECIAL TOOLS WORK PACKAGE		F.5.3.7	**<stl_partswp>**
KIT PARTS LIST WORK PACKAGE		F.5.3.8	**<kitswp>**
BULK ITEMS WORK PACKAGE		F.5.3.9	**<bulk_itemswp>**
SPECIAL TOOLS LIST WORK PACKAGE		F.5.3.10	**<stlwp>**
NSN INDEX WORK PACKAGE	R	F.5.3.11.1	**<nsnindxwp>**
P/N INDEX WORK PACKAGE	R	F.5.3.11.2	**<pnindxwp>**
REFERENCE DESIGNATOR INDEX WORK PACKAGE		F.5.3.11.3	**<refdesindxwp>**
CHAPTER X. SUPPORTING INFORMATION ***NOTE*** *Applicable supporting information work packages shall be arranged in the order in which they are presented here and numbered accordingly.*	**R**	APPENDIX G	**<sim>**
REFERENCES WORK PACKAGE	R	G.5.2	**<refwp>**
EXPENDABLE AND DURABLE ITEMS WORK PACKAGE	R	G.5.7	**<explistwp>**
TOOL IDENTIFICATION LIST WORK PACKAGE	R	G.5.8	**<toolidwp>**
MANDATORY REPLACEMENT PARTS WORK PACKAGE	R	G.5.9	**<mrplwp>**
SUPPORT ITEMS WORK PACKAGE		G.5.11	**<supitemwp>**
ADDITIONAL SUPPORTING WORK PACKAGES		G.5.12	**<genwp>**
REAR MATTER	**R**	5.2.2	**<rear>**
Glossary		5.2.2.1	**<glossary>**
Alphabetical index		5.2.2.2	**<aindx>**
DA Form 2028	R	5.2.2.3	**<da2028>**
Authentication page	R	5.2.2.4	**<authent>**
Foldout pages		5.2.2.5	**<foldsect>**
Back cover	R	5.2.2.6	**<back>**

Legend

R - Required P - Prohibited Shaded - As Required

Source: https://assist.dla.mil -- Downloaded: 2016-12-09T23:24Z
Check the source to verify that this is the current version before use.

This page intentionally left blank.

Source: https://assist.dla.mil -- Downloaded: 2016-12-09T23:24Z
Check the source to verify that this is the current version before use.

TABLE A-IV. Combined maintenance and maintenance with parts requirements matrix for _____.

TM Content	-23 -23&P	-24 -24&P	MIL-STD-40051-2C Reference	Element Name
FRONT MATTER	**R**	**R**	5.2.1	**<paper.frnt>**
Front cover	R	R	5.2.1.1	**<frntcover>**
(MC) Promulgation letter			5.2.1.3	**<promulgation>**
Warning summary			5.2.1.4	**<warnsum>**
Change transmittal page			5.2.1.5	**<chgsheet>**
List of effective pages/work packages	R	R	5.2.1.6	**<loepwp>**
Title page	R	R	5.2.1.7	**<titleblk>**
Table of contents	R	R	5.2.1.9	**<contents>**
How to use this manual	R	R	5.2.1.10	**<howtouse>**
CHAPTER 1. GENERAL INFORMATION, EQUIPMENT DESCRIPTION, AND THEORY OF OPERATION	**R**	**R**	APPENDIX B	**<gim>**
GENERAL INFORMATION WORK PACKAGE	R	R	B.5.2	**<ginfowp>**
Scope	R	R	B.5.2.3	**<scope>**
Maintenance forms, records, and reports	R	R	B.5.2.4	**<mfrr>**
Reporting Equipment Improvement Recommendations (EIR)	R	R	B.5.2.5	**<eir>**
Hand Receipt (HR) information			B.5.2.6	**<handreceipt>**
Corrosion Prevention and Control (CPC)	R	R	B.5.2.7	**<cpcdata>**
Ozone Depleting Substances (ODS)			B.5.2.8	**<odsdata>**
Destruction of Army materiel to prevent enemy use	R	R	B.5.2.9	**<destructmat>**
Preparation for storage or shipment	R	R	B.5.2.10	**<pssref>**
Transportability guidance	R	R	B.5.2.11	**<transportability>**
Warranty information			B.5.2.12	**<wrntyref>**
Nomenclature cross-reference list			B.5.2.13	**<nomenreflist>**
List of abbreviations	R	R	B.5.2.14	**<loa>**
Quality of material	R	R	B.5.2.16	**<qual.mat.info>**
Safety, care, and handling			B.5.2.17	**<sftyinfo>**
Nuclear hardness			B.5.2.18	**<hcp>**
Calibration			B.5.2.19	**<calref>**
Item unique identification (IUID)			B.5.2.20	**<iuid>**
Supporting information for repair parts, special tools, TMDE, and support equipment			B.5.2.27	**<supdata>**
Copyright credit line			B.5.2.28	**<copyrt>**

Source: https://assist.dla.mil -- Downloaded: 2016-12-09T23:24Z
Check the source to verify that this is the current version before use.

TABLE A-IV. Combined maintenance and maintenance with parts requirements matrix for _____.

TM Content	-23 -23&P	-24 -24&P	MIL-STD-40051-2C Reference	Element Name
EQUIPMENT DESCRIPTION AND DATA WORK PACKAGE	R	R	B.5.3	**<descwp>**
Equipment characteristics, capabilities, and features	R	R	B.5.3.3	**<eqpinfo>**
Location and description of major components	R	R	B.5.3.4	**<locdesc>**
Equipment differences	R	R	B.5.3.5	**<eqpdiff>**
Equipment data	R	R	B.5.3.6	**<eqpdata>**
THEORY OF OPERATION WORK PACKAGE	R	R	B.5.4	**<thrywp>**
CHAPTER X. TROUBLESHOOTING MASTER INDEX			APPENDIX D D.5.4.4	**<tim> <masterindexcategory>**
TROUBLESHOOTING INDEX WORK PACKAGE	R	R	D.5.5.5	**<tsindxwp>**
CHAPTER X. TROUBLESHOOTING PROCEDURES ***NOTE*** *The notation (*) indicates that at least one of the these content items shall be included*	**R**	**R**	APPENDIX D D.5.4.2	**<tim> <troublecategory>**
INTRODUCTION WORK PACKAGE			D.5.5.3	**<tsintrowp>**
TROUBLESHOOTING INDEX WORK PACKAGE			D.5.5.5	**<tsindxwp>**
**OPERATIONAL CHECKOUT WORK PACKAGES*			D.5.5.8.3	**<opcheckwp>**
**TROUBLESHOOTING WORK PACKAGES*			D.5.5.8.4	**<tswp>**
**COMBINED OPERATIONAL CHECKOUT AND TROUBLESHOOTING WORK PACKAGES*			D.5.5.8.5	**<opcheck-tswp>**
CHAPTER X. PMCS MAINTENANCE INSTRUCTIONS ***NOTE*** *PMCS may be in its own chapter or may be combined with other maintenance work packages in a maintenance chapter but not both places.*			APPENDIX E E.5.2.1	**<mim> <pmcscategory>**
PMCS INTRODUCTION WORK PACKAGE	R	R	E.5.3.4.1	**<pmcsintrowp>**
PMCS, INCLUDING LUBRICATION INSTRUCTIONS, WORK PACKAGE	R	R	E.5.3.4.2	**<pmcswp>**

Source: https://assist.dla.mil -- Downloaded: 2016-12-09T23:24Z
Check the source to verify that this is the current version before use.

TABLE A-IV. Combined maintenance and maintenance with parts requirements matrix for _____.

TM Content	-23 -23&P	-24 -24&P	MIL-STD-40051-2C Reference	Element Name
CHAPTER X. **MAINTENANCE INSTRUCTIONS** ***NOTE*** *PMCS may be in its own chapter or may be combined with other maintenance work packages in a maintenance chapter but not both places.*	**R**	**R**	APPENDIX E E.5.2.2 E.5.2.3	**<mim> <maintenancepmcscategory> <maintenancecategory>**
SERVICE UPON RECEIPT WORK PACKAGE			E.5.3.2	**<surwp>**
Service upon receipt tasks			E.5.3.2.3	**<surtsk>**
Siting			E.5.3.2.3.1	**<siting>**
Shelter requirements			E.5.3.2.3.2	**<shltr>**
Service upon receipt of materiel			E.5.3.2.3.3	**<surmat>**
Installation instructions			E.5.3.2.3.4	**<install>**
Preliminary servicing of equipment			E.5.3.2.3.5	**<preserv>**
Preliminary checks and adjustment of equipment			E.5.3.2.3.6	**<prechkadj>**
Preliminary calibration of equipment			E.5.3.2.3.7	**<precal>**
Circuit alignment			E.5.3.2.3.8	**<calign>**
Ammunition markings			E.5.3.2.3.9.1	**<mark>**
Classification of defects			E.5.3.2.3.9.2	**<ammo.defect>**
Ammunition handling			E.5.3.2.3.9.3	**<ammo.handling>**
Procedures to activate ammunition			E.5.3.2.3.9.4	**<arm>**
Additional service upon receipt task			E.5.3.2.3.10	**<other.surtsk>**
Follow-on maintenance			E.5.3.2.3.11	**<followon.maintsk>**
EQUIPMENT/USER FITTING INSTRUCTIONS WORK PACKAGE			E.5.3.3	**<perseqpwp>**
PMCS INTRODUCTION WORK PACKAGE			E.5.3.4.1	**<pmcsintrowp>**
PMCS WORK PACKAGE			E.5.3.4.2	**<pmcswp>**
MAINTENANCE WORK PACKAGES	R	R	E.5.3.5	**<maintwp>**
Maintenance tasks	R	R	E.5.3.5.3	**<maintsk>**
Inspect			E.5.3.5.3.2	**<inspect>**
Test			E.5.3.5.3.3	**<test>**
Service			E.5.3.5.3.4	**<service>**
Adjust			E.5.3.5.3.5	**<adjust>**
Align			E.5.3.5.3.6	**<align>**
Calibrate			E.5.3.5.3.7	**<calibration>**
Remove			E.5.3.5.3.8	**<remove>**

Source: https://assist.dla.mil -- Downloaded: 2016-12-09T23:24Z
Check the source to verify that this is the current version before use.

TABLE A-IV. Combined maintenance and maintenance with parts requirements matrix for _____.

TM Content	-23 -23&P	-24 -24&P	MIL-STD-40051-2C Reference	Element Name
Install			E.5.3.5.3.9	**<install>**
Replace			E.5.3.5.3.10	**<replace>**
Repair			E.5.3.5.3.11	**<repair>**
Paint			E.5.3.5.3.12	**<paint>**
Overhaul			E.5.3.5.3.13	**<overhaul>**
Rebuild			E.5.3.5.3.14	**<rebuild>**
Lubricate			E.5.3.5.3.15	**<lube>**
Mark			E.5.3.5.3.16	**<mark>**
Pack			E.5.3.5.3.17	**<pack>**
Unpack			E.5.3.5.3.18	**<unpack>**
Preserve			E.5.3.5.3.19	**<preservation>**
Prepare for use			E.5.3.5.3.20	**<prepforuse>**
Assemble			E.5.3.5.3.21	**<assem>**
Disassemble			E.5.3.5.3.22	**<disassem>**
Clean			E.5.3.5.3.23	**<clean>**
Nondestructive inspection			E.5.3.5.3.24	**<ndi>**
Radio interference suppression			E.5.3.5.3.25	**<ris>**
Place in service			E.5.3.5.3.26	**<pis>**
Towing			E.5.3.5.3.27	**<tow>**
Jacking			E.5.3.5.3.28	**<jack>**
Parking			E.5.3.5.3.29	**<park>**
Mooring			E.5.3.5.3.30	**<moor>**
Covering			E.5.3.5.3.31	**<cover>**
Hoisting			E.5.3.5.3.32	**<hoist>**
Sling loading			E.5.3.5.3.33	**<sling>**
External power			E.5.3.5.3.34	**<extpwr>**
Preparation for storage	R	R	E.5.3.5.3.35	**<prepstore>**
Preparation for shipment	R	R	E.5.3.5.3.36	**<prepship>**
Transport	R	R	E.5.3.5.3.37	**<transport>**
Arm			E.5.3.5.3.38	**<arm>**
Load			E.5.3.5.3.39	**<load>**
Unload			E.5.3.5.3.40	**<unload>**
Install peripheral device			E.5.3.5.3.41	**<installperdev>**
Uninstall peripheral device			E.5.3.5.3.42	**<uninstallperdev>**
Upgrade/patch software			E.5.3.5.3.43	**<upgrade>**

Source: https://assist.dla.mil -- Downloaded: 2016-12-09T23:24Z
Check the source to verify that this is the current version before use.

TABLE A-IV. Combined maintenance and maintenance with parts requirements matrix for _____.

TM Content	-23 -23&P	-24 -24&P	MIL-STD-40051-2C Reference	Element Name
Configure software			E.5.3.5.3.44	**<configure>**
Debug software			E.5.3.5.3.45	**<debug>**
Additional maintenance task			E.5.3.5.3.46	**<other.maintsk>**
Follow-on maintenance			E.5.3.5.3.47	**<followon.maintsk>**
GENERAL MAINTENANCE WORK PACKAGE			E.5.3.7	**<gen.maintwp>**
LUBRICATION INSTRUCTIONS WORK PACKAGE			E.5.3.8	**<lubewp>**
ILLUSTRATED LIST OF MANUFACTURED ITEMS WORK PACKAGE			E.5.3.10	
Illustrated list of manufactured items introduction work package	R	R	E.5.3.10.1	**<manu_items_introwp>**
Manufacturing procedures work package	R	R	E.5.3.10.2	**<manuwp>**
TORQUE LIMITS WORK PACKAGE			E.5.3.11	**<torquewp>**
WIRING DIAGRAMS WORK PACKAGE			E.5.3.12	**<wiringwp>**
CHAPTER X. AUXILIARY EQUIPMENT MAINTENANCE INSTRUCTIONS			APPENDIX E E.5.2.6	**<mim> <auxiliarycategory>**
AUXILIARY EQUIPMENT MAINTENANCE WORK PACKAGE			E.5.3.14	**<auxeqpwp>**
ILLUSTRATED LIST OF MANUFACTURED ITEMS WORK PACKAGE			E.5.3.10	
Illustrated list of manufactured items introduction work package	R	R	E.5.3.10.1	**<manu_items_introwp>**
Manufacturing procedures work package	R	R	E.5.3.10.2	**<manuwp>**
TORQUE LIMITS WORK PACKAGE			E.5.3.11	**<torquewp>**
WIRING DIAGRAMS WORK PACKAGE			E.5.3.12	**<wiringwp>**
CHAPTER X. AMMUNITION MAINTENANCE INSTRUCTIONS			APPENDIX E E.5.2.7	**<mim> <ammunitioncategory>**
AMMUNITION MAINTENANCE WORK PACKAGE			E.5.3.15.1	**<ammowp>**
AMMUNITION MARKING INFORMATION WORK PACKAGE			E.5.3.15.2	**<ammo.markingwp>**
FOREIGN AMMUNITION (NATO) WORK PACKAGE			E.5.3.15.3	**<natowp>**

Source: https://assist.dla.mil -- Downloaded: 2016-12-09T23:24Z
Check the source to verify that this is the current version before use.

TABLE A-IV. Combined maintenance and maintenance with parts requirements matrix for _____.

TM Content	-23 -23&P	-24 -24&P	MIL-STD-40051-2C Reference	Element Name
CHAPTER X. **DESTRUCTION OF EQUIPMENT TO PREVENT ENEMY USE** *NOTE* *If a separate destruction of material manual is not developed for this equipment, then the destruction chapter must be included.*			APPENDIX H	**<dim>**
DESTRUCTION PROCEDURES INTRODUCTION WORK PACKAGE	R	R	H.5.3	**<destruct-introwp>**
Authority to destroy	R	R	H.5.3.3	**<authorize_to_destroy>**
Reporting destruction	R	R	H.5.3.4	**<report_destruct>**
General destruction information	R	R	H.5.3.5	**<general_destruct_info>**
Degree of destruction	R	R	H.5.3.6	**<degree_of_destruct>**
Essential components and spare parts			H.5.3.7	**<component_spares>**
DESTRUCTION WORK PACKAGE	R	R	H.5.4	**<destruct-materialwp>**
Parts list			H.5.4.3	**<essential_spares>**
Specific destruction procedures	R	R	H.5.4.4	**<proc>**
SOFTWARE INFORMATION			Appendix M	**<soim> <softwarecategory>**
SOFTWARE GENERAL INFORMATION WORK PACKAGE	R	R	M.5.3.1	**<softginfowp>**
System Overview	R	R	M.5.3.1.6	**<softsysover>**
Document Overview	R	R	M.5.3.1.7	**<softdocover>**
SOFTWARE SUMMARY WORK PACKAGE	R	R	M.5.3.2	**<softsumwp>**
SOFTWARE EFFECTIVITY WORK PACKAGE			M.5.3.3	**<softeffectwp>**
DIFFERENCES BETWEEN SOFTWARE VERSIONS WORK PACKAGE			M.5.3.4	**<softdiffversionwp>**
FEATURES AND CAPAIBLITIES WORK PACKAGE	R	R	M.5.4.1	**<softfeaturescapwp>**
SCREEN DISPLAYS WORK PACKAGE	R	R	M.5.4.2	**<softscreendisplaywp>**
MENUS/DIRECTORIES WORK PACKAGE	R	R	M.5.4.3	**<softmenuwp>**
TOOLS AND BUTTONS WORK PACKAGES	R	R	M.5.4.4	**<softtoolswp>**
SECURITY AND PRIVACY PROCEDURES WORK PACKAGE	R	R	M.5.5.1	**<softsecprivwp>**

Source: https://assist.dla.mil -- Downloaded: 2016-12-09T23:24Z
Check the source to verify that this is the current version before use.

TABLE A-IV. Combined maintenance and maintenance with parts requirements matrix for_____.

TM Content	-23 -23&P	-24 -24&P	MIL-STD-40051-2C Reference	Element Name
SUPERVISORY CONTROLS WORK PACKAGE			M.5.5.2	**<softsuperctrlswp>**
POWERUP/STARTUP AND POWERDOWN/SHUTDOWN PROCEDURES WORK PACKAGE	R	R	M.5.5.3	**<softpowerupwp>**
ACCESSING/EXITING SOFTWARE WORK PACKAGE	R	R	M.5.5.4	**<softaccesswp>**
KEY COMMANDS WORK PACKAGE			M.5.5.5	**<softkeycmdswp>**
PROCESSES AND COMMANDS WORK PACKAGE			M.5.5.6	**<softproccmdwp>**
USER INTERFACE WORK PACKAGE			M.5.5.7	**<softguiwp>**
SOFTWARE OPERATING CONVENTIONS WORK PACKAGE			M.5.5.8	**<softopconventions wp>**
ADDITIONAL SOFTWARE OPERATION WP			M.5.5.9	**<softgenwp>**
MESSAGES WORK PACKAGE			M.5.6.3	**<softmessageswp>**
RECOVERY FROM ERRORS, MALFUNCTIONS, AND EMERGENCIES WORK PACKAGE			M.5.6.4	**<softerrorswp>**
CHAPTER X. **RPSTL** ***(–23, –24)*** ***(–23&P, –24&P)***	**P** **R**	**P** **R**	APPENDIX F	**<pim>**
INTRODUCTION WORK PACKAGE	R	R	F.5.3.5	**<introwp>**
REPAIR PARTS LIST WORK PACKAGE	R	R	F.5.3.6	**<plwp>**
REPAIR PARTS FOR SPECIAL TOOLS WORK PACKAGE			F.5.3.7	**<stl_partswp>**
KIT PARTS LIST WORK PACKAGE			F.5.3.8	**<kitswp>**
BULK ITEM WORK PACKAGE			F.5.3.9	**<bulk_itemswp>**
SPECIAL TOOLS LIST WORK PACKAGE			F.5.3.10	**<stlwp>**
NSN INDEX WORK PACKAGE	R	R	F.5.3.11.1	**<nsnindxwp>**
P/N INDEX WORK PACKAGE	R	R	F.5.3.11.2	**<pnindxwp>**
REFERENCE DESIGNATOR INDEX WORK PACKAGE			F.5.3.11.3	**<refdesindxwp>**
CHAPTER X. **SUPPORTING INFORMATION** ***NOTE*** *Applicable supporting information work packages shall be arranged in the order in which they are presented here and numbered accordingly.*	**R**	**R**	APPENDIX G	**<sim>**

Source: https://assist.dla.mil -- Downloaded: 2016-12-09T23:24Z
Check the source to verify that this is the current version before use.

TABLE A-IV. Combined maintenance and maintenance with parts requirements matrix for _____.

TM Content	-23 -23&P	-24 -24&P	MIL-STD-40051-2C Reference	Element Name
REFERENCES WORK PACKAGE	R	R	G.5.2	**<refwp>**
INTRODUCTION FOR NON-AVIATION TWO-LEVEL MAC WORK PACKAGE	R	R	G.5.3.1	**<macintrowp>**
NON-AVIATION TWO-LEVEL MAC WORK PACKAGE	R	R	G.5.3.3	**<macwp>**
EXPENDABLE AND DURABLE ITEMS WORK PACKAGE	R	R	G.5.7	**<explistwp>**
TOOL IDENTIFICATION LIST WORK PACKAGE	R	R	G.5.8	**<toolidwp>**
MANDATORY REPLACEMENT PARTS WORK PACKAGE	R	R	G.5.9	**<mrplwp>**
CRITICAL SAFETY ITEMS WORK PACKAGE	R	R	G.5.10	**<csi.wp>**
SUPPORT ITEMS WORK PACKAGE			G.5.11	**<supitemwp>**
ADDITIONAL SUPPORTING WORK PACKAGES			G.5.12	**<genwp>**
REAR MATTER	**R**	**R**	5.2.2	**<rear>**
Glossary			5.2.2.1	**<glossary>**
Alphabetical index			5.2.2.2	**<aindx>**
DA Form 2028	R	R	5.2.2.3	**<da2028>**
Authentication page	R	R	5.2.2.4	**<authent>**
Foldout pages			5.2.2.5	**<foldsect>**
Back cover	R	R	5.2.2.6	**<back>**

Legend

R - Required

P – Prohibited

Shaded - As Required

Source: https://assist.dla.mil -- Downloaded: 2016-12-09T23:24Z
Check the source to verify that this is the current version before use.

TABLE A-V. Aviation maintenance and maintenance with parts requirements matrix for aviation _____.

TM Content	AVIATION -23/-23&P	AVIATION -24/-24&P	MIL-STD-40051-2C Reference	Element Name
FRONT MATTER	**R**	**R**	5.2.1	**<paper.frnt>**
Front cover	R	R	5.2.1.1	**<frntcover>**
(MC) Promulgation letter			5.2.1.3	**<promulgation>**
Warning summary			5.2.1.4	**<warnsum>**
Change transmittal page			5.2.1.5	**<chgsheet>**
List of effective pages/work packages			5.2.1.6	**<loepwp>**
Title page	R	R	5.2.1.7	**<titleblk>**
Table of contents	R	R	5.2.1.9	**<contents>**
How to use this manual	R	R	5.2.1.10	**<howtouse>**
CHAPTER 1. GENERAL INFORMATION, EQUIPMENT DESCRIPTION, AND THEORY OF OPERATION	**R**	**R**	APPENDIX B	**<gim>**
GENERAL INFORMATION WORK PACKAGE	R	R	B.5.2	**<ginfowp>**
Scope	R	R	B.5.2.3	**<scope>**
Maintenance forms, records, and reports	R	R	B.5.2.4	**<mfrr>**
Reporting Equipment Improvement Recommendations (EIR)	R	R	B.5.2.5	**<eir>**
Hand Receipt (HR) manuals			B.5.2.6	**<handreceipt>**
Corrosion Prevention and Control (CPC)	R	R	B.5.2.7	**<cpcdata>**
Ozone Depleting Substances (ODS)			B.5.2.8	**<odsdata>**
Destruction of Army materiel to prevent enemy use	R	R	B.5.2.9	**<destructmat>**
Preparation for storage or shipment	R	R	B.5.2.10	**<pssref>**
Transportability guidance	R	R	B.5.2.11	**<transportability>**
Warranty information			B.5.2.12	**<wrntyref>**
Nomenclature cross-reference list			B.5.2.13	**<nomenreflist>**
List of abbreviations	R	R	B.5.2.14	**<loa>**
Quality Assurance (QA)			B.5.2.15	**<qainfo>**
Quality of material	R	R	B.5.2.16	**<qual.mat.info>**
Safety, care, and handling			B.5.2.17	**<sftyinfo>**
Nuclear hardness			B.5.2.18	**<hcp>**
Calibration			B.5.2.19	**<calref>**
Item unique identification			B.5.2.20	**<iuid>**
Critical Safety Items (CSI)	R	R	B.5.2.25	**<csireq>**

Source: https://assist.dla.mil -- Downloaded: 2016-12-09T23:24Z
Check the source to verify that this is the current version before use.

TABLE A-V. Aviation maintenance and maintenance with parts requirements matrix for aviation .

TM Content	AVIATION -23/-23&P	AVIATION -24/-24&P	MIL-STD-40051-2C Reference	Element Name
Supporting information for repair parts, special tools, TMDE, and support equipment			B.5.2.27	**<supdata>**
Copyright credit line			B.5.2.28	**<copyrt>**
EQUIPMENT DESCRIPTION AND DATA WORK PACKAGE	R	R	B.5.3	**<descwp>**
Equipment characteristics, capabilities, and features	R	R	B.5.3.3	**<eqpinfo>**
Location and description of major components	R	R	B.5.3.4	**<locdesc>**
Equipment differences	R	R	B.5.3.5	**<eqpdiff>**
Equipment data	R	R	B.5.3.6	**<eqpdata>**
THEORY OF OPERATION WORK PACKAGE	R	R	B.5.4	**<thrywp>**
CHAPTER X. TROUBLESHOOTING MASTER INDEX			APPENDIX D D.5.4.4	**<tim> <masterindexcategory>**
TROUBLESHOOTING INDEX WORK PACKAGE	R	R	D.5.5.5	**<tsindxwp>**
CHAPTER X. TROUBLESHOOTING PROCEDURES ***NOTE*** *The notation (*) indicates that at least one of the these content items shall be included*	**R**	**R**	APPENDIX D D.5.4.1	**<tim> <troubleaviationcategory>**
INTRODUCTION WORK PACKAGE			D.5.5.3	**<tsintrowp>**
TECHNICAL DESCRIPTION WORK PACKAGE			D.5.5.4	**<techdescwp>**
TROUBLESHOOTING INDEX WORK PACKAGE			D.5.5.5	**<tsindxwp>**
**OPERATIONAL CHECKOUT WORK PACKAGE*			D.5.5.8.3	**<opcheckwp>**
**TROUBLESHOOTING WORK PACKAGE*			D.5.5.8.4	**<tswp>**
**COMBINED OPERATIONAL CHECKOUT AND TROUBLESHOOTING WORK PACKAGE*			D.5.5.8.5	**<opcheck-tswp>**
CHAPTER X. AIRCRAFT MAINTENANCE INSTRUCTIONS	**R**	**R**	APPENDIX E E.5.2.5	**<mim> <aviationcategory>**
SERVICE UPON RECEIPT WORK PACKAGE	R	R	E.5.3.2	**<surwp>**

Source: https://assist.dla.mil -- Downloaded: 2016-12-09T23:24Z
Check the source to verify that this is the current version before use.

TABLE A-V. Aviation maintenance and maintenance with parts requirements matrix for aviation.

TM Content	AVIATION -23/-23&P	AVIATION -24/-24&P	MIL-STD-40051-2C Reference	Element Name
Service upon receipt tasks	R	R	E.5.3.2.3	**<surtsk>**
Siting			E.5.3.2.3.1	**<siting>**
Shelter requirements			E.5.3.2.3.2	**<shltr>**
Service upon receipt of materiel	R	R	E.5.3.2.3.3	**<surmat>**
Installation instructions	R	R	E.5.3.2.3.4	**<install>**
Preliminary servicing of equipment			E.5.3.2.3.5	**<preserv>**
Preliminary checks and adjustment of equipment			E.5.3.2.3.6	**<prechkadj>**
Preliminary calibration of equipment			E.5.3.2.3.7	**<precal>**
Circuit alignment			E.5.3.2.3.8	**<calign>**
Ammunition markings			E.5.3.2.3.9.1	**<mark>**
Classification of defects			E.5.3.2.3.9.2	**<ammo.defect>**
Ammunition handling			E.5.3.2.3.9.3	**<ammo.handling>**
Procedures to activate ammunition			E.5.3.2.3.9.4	**<arm>**
Additional maintenance task			E.5.3.2.3.10	**<other.surtsk>**
Follow-on maintenance			E.5.3.2.3.11	**<followon.maintsk>**
EQUIPMENT/USER FITTING INSTRUCTIONS WORK PACKAGE			E.5.3.3	**<perseqpwp>**
PREVENTIVE MAINTENANCE INSPECTIONS WORK PACKAGE			E.5.3.13.1	**<pmiwp>**
MAINTENANCE WORK PACKAGES	R	R	E.5.3.5	**<maintwp>**
Maintenance tasks	R	R	E.5.3.5.3	**<maintsk>**
Inspect			E.5.3.5.3.2	**<inspect>**
Test			E.5.3.5.3.3	**<test>**
Service			E.5.3.5.3.4	**<service>**
Adjust			E.5.3.5.3.5	**<adjust>**
Align			E.5.3.5.3.6	**<align>**
Calibrate			E.5.3.5.3.7	**<calibration>**
Remove			E.5.3.5.3.8	**<remove>**
Install			E.5.3.5.3.9	**<install>**
Replace			E.5.3.5.3.10	**<replace>**
Repair			E.5.3.5.3.11	**<repair>**
Paint			E.5.3.5.3.12	**<paint>**
Overhaul			E.5.3.5.3.13	**<overhaul>**
Rebuild			E.5.3.5.3.14	**<rebuild>**
Lubricate			E.5.3.5.3.15	**<lube>**

Source: https://assist.dla.mil -- Downloaded: 2016-12-09T23:24Z
Check the source to verify that this is the current version before use.

TABLE A-V. Aviation maintenance and maintenance with parts requirements matrix for aviation .

TM Content	AVIATION -23/-23&P	AVIATION -24/-24&P	MIL-STD-40051-2C Reference	Element Name
Mark			E.5.3.5.3.16	**<mark>**
Pack			E.5.3.5.3.17	**<pack>**
Unpack			E.5.3.5.3.18	**<unpack>**
Preserve			E.5.3.5.3.19	**<preservation>**
Prepare for use			E.5.3.5.3.20	**<prepforuse>**
Assemble			E.5.3.5.3.21	**<assem>**
Disassemble			E.5.3.5.3.22	**<disassem>**
Clean			E.5.3.5.3.23	**<clean>**
Nondestructive inspection			E.5.3.5.3.24	**<ndi>**
Radio interference suppression			E.5.3.5.3.25	**<ris>**
Place in service			E.5.3.5.3.26	**<pis>**
Towing			E.5.3.5.3.27	**<tow>**
Jacking			E.5.3.5.3.28	**<jack>**
Parking			E.5.3.5.3.29	**<park>**
Mooring			E.5.3.5.3.30	**<moor>**
Covering			E.5.3.5.3.31	**<cover>**
Hoisting			E.5.3.5.3.32	**<hoist>**
Sling loading			E.5.3.5.3.33	**<sling>**
External power			E.5.3.5.3.34	**<extpwr>**
Preparation for storage	R	R	E.5.3.5.3.35	**<prepstore>**
Preparation for shipment	R	R	E.5.3.5.3.36	**<prepship>**
Transport	R	R	E.5.3.5.3.37	**<transport>**
Arm			E.5.3.5.3.38	**<arm>**
Load			E.5.3.5.3.39	**<load>**
Unload			E.5.3.5.3.40	**<unload>**
Install peripheral device			E.5.3.5.3.41	**<installperdev>**
Uninstall peripheral device			E.5.3.5.3.42	**<uninstallperdev>**
Upgrade/patch software			E.5.3.5.3.43	**<upgrade>**
Configure software			E.5.3.5.3.44	**<configure>**
Debug software			E.5.3.5.3.45	**<debug>**
Additional maintenance task			E.5.3.5.3.46	**<other.maintsk>**
Follow-on maintenance			E.5.3.5.3.47	**<followon.maintsk>**
GENERAL MAINTENANCE WORK PACKAGE			E.5.3.7	**<gen.maintwp>**

Source: https://assist.dla.mil -- Downloaded: 2016-12-09T23:24Z
Check the source to verify that this is the current version before use.

TABLE A-V. Aviation maintenance and maintenance with parts requirements matrix for aviation_____.

TM Content	AVIATION -23/-23&P	AVIATION -24/-24&P	MIL-STD-40051-2C Reference	Element Name
OVERHAUL AND RETIREMENT SCHEDULE WORK PACKAGE	R	R	E.5.3.6	**<orschwp>**
LUBRICATION INSTRUCTIONS WORK PACKAGE			E.5.3.8	**<lubewp>**
ILLUSTRATED LIST OF MANUFACTURED ITEMS WORK PACKAGE			E.5.3.10	
Illustrated list of manufactured items introduction work package	R	R	E.5.3.10.1	**<manu_items_introwp>**
Manufacturing procedures work package	R	R	E.5.3.10.2	**<manuwp>**
TORQUE LIMITS WORK PACKAGE			E.5.3.11	**<torquewp>**
AIRCRAFT INVENTORY MASTER GUIDE WORK PACKAGE			E.5.3.13.2	**<inventorywp>**
STORAGE OF AIRCRAFT WORK PACKAGE			E.5.3.13.3	**<storagewp>**
WEIGHING AND LOADING WORK PACKAGE (ASB ONLY)	R	R	E.5.3.13.4	**<wtloadwp>**
WIRING DIAGRAMS WORK PACKAGE			E.5.3.12	**<wiringwp>**
CHAPTER X. AUXILIARY EQUIPMENT MAINTENANCE INSTRUCTIONS			**APPENDIX E** E.5.2.6	**<mim> <auxiliarycategory>**
AUXILIARY EQUIPMENT MAINTENANCE WORK PACKAGE			E.5.3.14	**<auxeqpwp>**
ILLUSTRATED LIST OF MANUFACTURED ITEMS WORK PACKAGES			E.5.3.10	
ILLUSTRATED LIST OF MANUFACTURED ITEMS INTRODUCTION WORK PACKAGE	R	R	E.5.3.10.1	**<manu_items_introwp>**
MANUFACTURING PROCEDURES WORK PACKAGE	R	R	E.5.3.10.2	**<manuwp>**
TORQUE LIMITS WORK PACKAGE			E.5.3.11	**<torquewp>**
WIRING DIAGRAMS WORK PACKAGE			E.5.3.12	**<wiringwp>**
CHAPTER X. AMMUNITION MAINTENANCE INSTRUCTIONS			APPENDIX E E.5.2.7	**<mim> <ammunitioncategory>**
AMMUNITION MAINTENANCE WORK PACKAGE			E.5.3.15.1	**<ammowp>**
AMMUNITION MARKING INFORMATION WORK PACKAGE			E.5.3.15.2	**<ammo.markingwp>**

Source: https://assist.dla.mil -- Downloaded: 2016-12-09T23:24Z
Check the source to verify that this is the current version before use.

TABLE A-V. Aviation maintenance and maintenance with parts requirements matrix for aviation _____.

TM Content	AVIATION -23/-23&P	AVIATION -24/-24&P	MIL-STD-40051-2C Reference	Element Name
FOREIGN AMMUNITION (NATO) WORK PACKAGE			E.5.3.15.3	**<natowp>**
CHAPTER X. DESTRUCTION OF EQUIPMENT TO PREVENT ENEMY USE *NOTE* *If a separate destruction of materiel manual is not developed for this equipment, then the destruction chapter must be included.*			APPENDIX H	**<dim>**
DESTRUCTION PROCEDURES INTRODUCTION WORK PACKAGE	R	R	H.5.3	**<destruct-introwp>**
Authority to destroy	R	R	H.5.3.3	**<authorize_to_destroy>**
Reporting destruction	R	R	H.5.3.4	**<report_destruct>**
General destruction information	R	R	H.5.3.5	**<general_destruct_info>**
Degree of destruction	R	R	H.5.3.6	**<degree_of_destruct>**
Essential components and spare parts			H.5.3.7	**<component_spares>**
DESTRUCTION PROCEDURES WORK PACKAGE			H.5.4	**<destruct-materialwp>**
Parts list			H.5.4.3	**<essential_spares>**
Specific destruction procedures			H.5.4.4	**<proc>**
SOFTWARE INFORMATION			Appendix M	**<soim> <softwarecategory>**
SOFTWARE GENERAL INFORMATION WORK PACKAGE	R	R	M.5.3.1	**<softginfowp>**
System Overview	R	R	M.5.3.1.6	**<softsysover>**
Document Overview	R	R	M.5.3.1.7	**<softdocover>**
SOFTWARE SUMMARY WORK PACKAGE	R	R	M.5.3.2	**<softsumwp>**
SOFTWARE EFFECTIVITY WORK PACKAGE			M.5.3.3	**<softeffectwp>**
DIFFERENCES BETWEEN SOFTWARE VERSIONS WORK PACKAGE			M.5.3.4	**<softdiffversionwp>**
FEATURES AND CAPAIBLITIES WORK PACKAGE	R	R	M.5.4.1	**<softfeaturescapwp>**
SCREEN DISPLAYS WORK PACKAGE	R	R	M.5.4.2	**<softscreendisplaywp>**
MENUS/DIRECTORIES WORK PACKAGE	R	R	M.5.4.3	**<softmenuwp>**
TOOLS AND BUTTONS WORK PACKAGES	R	R	M.5.4.4	**<softtoolswp>**

Source: https://assist.dla.mil -- Downloaded: 2016-12-09T23:24Z
Check the source to verify that this is the current version before use.

TABLE A-V. Aviation maintenance and maintenance with parts requirements matrix for aviation _____.

TM Content	AVIATION -23/-23&P	AVIATION -24/-24&P	MIL-STD-40051-2C Reference	Element Name
SECURITY AND PRIVACY PROCEDURES WORK PACKAGE	R	R	M.5.5.1	**<softsecprivwp>**
SUPERVISORY CONTROLS WORK PACKAGE			M.5.5.2	**<softsuperctrlswp>**
POWERUP/STARTUP AND POWERDOWN/SHUTDOWN PROCEDURES WORK PACKAGE	R	R	M.5.5.3	**<softpowerupwp>**
ACCESSING/EXITING SOFTWARE WORK PACKAGE	R	R	M.5.5.4	**<softaccesswp>**
KEY COMMANDS WORK PACKAGE			M.5.5.5	**<softkeycmdswp>**
PROCESSES AND COMMANDS WORK PACKAGE			M.5.5.6	**<softproccmdwp>**
USER INTERFACE WORK PACKAGE			M.5.5.7	**<softguiwp>**
SOFTWARE OPERATING CONVENTIONS WORK PACKAGE			M.5.5.8	**<softopconventionswp>**
ADDITIONAL SOFTWARE OPERATION WP			M.5.5.9	**<softgenwp>**
MESSAGES WORK PACKAGE			M.5.6.3	**<softmessageswp>**
RECOVERY FROM ERRORS, MALFUNCTIONS, AND EMERGENCIES WORK PACKAGE			M.5.6.4	**<softerrorswp>**
CHAPTER X. **RPSTL** ***(23/24)*** ***(23&P/24&P)***	**P** **R**	**P** **R**	APPENDIX F	**<pim>**
INTRODUCTION WORK PACKAGE	R	R	F.5.3.5	**<introwp>**
REPAIR PARTS LIST WORK PACKAGE	R	R	F.5.3.6	**<plwp>**
REPAIR PARTS FOR SPECIAL TOOLS WORK PACKAGE			F.5.3.7	**<stl_partswp>**
KIT PARTS LIST WORK PACKAGE			F.5.3.8	**<kitswp>**
BULK ITEMS WORK PACKAGE			F.5.3.9	**<bulk_itemswp>**
SPECIAL TOOLS LIST WORK PACKAGE			F.5.3.10	**<stlwp>**
NSN INDEX WORK PACKAGE	R	R	F.5.3.11.1	**<nsnindxwp>**
P/N INDEX WORK PACKAGE	R	R	F.5.3.11.2	**<pnindxwp>**
REFERENCE DESIGNATOR INDEX WORK PACKAGE			F.5.3.11.3	**<refdesindxwp>**

Source: https://assist.dla.mil -- Downloaded: 2016-12-09T23:24Z
Check the source to verify that this is the current version before use.

TABLE A-V. Aviation maintenance and maintenance with parts requirements matrix for aviation _____.

TM Content	AVIATION -23/-23&P	AVIATION -24/-24&P	MIL-STD-40051-2C Reference	Element Name
CHAPTER X. SUPPORTING INFORMATION ***NOTE*** *Applicable supporting information work packages shall be arranged in the order in which they are presented here and numbered accordingly.*	**R**	**R**	APPENDIX G	**<sim>**
REFERENCES WORK PACKAGE	R	R	G.5.2	**<refwp>**
INTRODUCTION FOR AVIATION TWO-LEVEL MAC WORK PACKAGE	R	R	G.5.3.2	**<macintrowp>**
AVIATION TWO-LEVEL MAC WORK PACKAGE	R	R	G.5.3.3	**<macwp>**
EXPENDABLE AND DURABLE ITEMS LIST WORK PACKAGE	R	R	G.5.7	**<explistwp>**
TOOL IDENTIFICATION LIST WORK PACKAGE	R	R	G.5.8	**<toolidwp>**
MANDATORY REPLACEMENT PARTS WORK PACKAGE	R	R	G.5.9	**<mrplwp>**
CRITICAL SAFETY ITEMS (CSI) WORK PACKAGE	R	R	G.5.10	**<csi.wp>**
SUPPORT ITEMS WORK PACKAGE			G.5.11	**<supitemwp>**
ADDITIONAL SUPPORTING WORK PACKAGES			G.5.12	**<genwp>**
REAR MATTER	**R**	**R**	5.2.2	**<rear>**
Glossary			5.2.2.1	**<glossary>**
Alphabetical index			5.2.2.2	**<aindx>**
DA Form 2028	R	R	5.2.2.3	**<da2028>**
Authentication page	R	R	5.2.2.4	**<authent>**
Foldout pages			5.2.2.5	**<foldsect>**
Back cover	R	R	5.2.2.6	**<back>**

Legend

R - Required P - Prohibited Shaded - As required

Source: https://assist.dla.mil -- Downloaded: 2016-12-09T23:24Z
Check the source to verify that this is the current version before use.

TABLE A-VI. Stand-alone RPSTL requirements matrix for _____.

TM Content	RPSTL	MIL-STD-40051-2C Reference	Element Name
FRONT MATTER	**R**	5.2.1	**<paper.frnt>**
Front cover	R	5.2.1.1	**<frntcover>**
(MC) Promulgation letter		5.2.1.3	**<promulgation>**
Change transmittal page		5.2.1.5	**<chgsheet>**
List of effective pages/work packages	R	5.2.1.6	**<loepwp>**
Title page	R	5.2.1.7	**<titleblk>**
Table of contents	R	5.2.1.9	**<contents>**
CHAPTER 1. REPAIR PARTS AND SPECIAL TOOLS LIST FOR (ENTER EQUIPMENT NAME)	**R**	APPENDIX F	**<pim>**
INTRODUCTION WORK PACKAGE	R	F.5.3.5	**<introwp>**
REPAIR PARTS LIST WORK PACKAGES	R	F.5.3.6	**<plwp>**
REPAIR PARTS FOR SPECIAL TOOLS WORK PACKAGE		F.5.3.7	**<stl_partswp>**
KIT PARTS LIST WORK PACKAGE		F.5.3.8	**<kitswp>**
BULK ITEM WORK PACKAGE		F.5.3.9	**<bulk_itemswp>**
SPECIAL TOOLS LIST WORK PACKAGE		F.5.3.10	**<stlwp>**
NSN INDEX WORK PACKAGE	R	F.5.3.11.1	**<nsnindxwp>**
P/N INDEX WORK PACKAGE	R	F.5.3.11.2	**<pnindxwp>**
REFERENCE DESIGNATOR INDEX WORK PACKAGE		F.5.3.11.3	**<refdesindxwp>**
REAR MATTER	**R**	5.2.2	**<rear>**
DA Form 2028	R	5.2.2.3	**<da2028>**
Authentication page	R	5.2.2.4	**<authent>**
Back cover	R	5.2.2.6	**<back>**

Legend

R - Required

P - Prohibited

Shaded - As Required

Source: https://assist.dla.mil -- Downloaded: 2016-12-09T23:24Z
Check the source to verify that this is the current version before use.

This page intentionally left blank.

Source: https://assist.dla.mil -- Downloaded: 2016-12-09T23:24Z
Check the source to verify that this is the current version before use.

TABLE A-VII. DMWR/NMWR requirements matrix for _____.

DMWR/NMWR Content	DMWR DMWR with RPSTL	NMWR NMWR with RPSTL	MIL-STD-40051-2C Reference	Element Name
FRONT MATTER	**R**	**R**	5.2.1	**<paper.frnt>**
Front cover	R	R	5.2.1.1	**<frntcover>**
(MC) Promulgation letter			5.2.1.3	**<promulgation>**
Warning summary			5.2.1.4	**<warnsum>**
Change transmittal page			5.2.1.5	**<chgsheet>**
List of effective pages/work packages	R	R	5.2.1.6	**<loepwp>**
Title page	R	R	5.2.1.7	**<titleblk>**
Table of contents	R	R	5.2.1.9	**<contents>**
CHAPTER 1. GENERAL INFORMATION, EQUIPMENT DESCRIPTION, AND THEORY OF OPERATION	**R**	**R**	APPENDIX B	**<gim>**
GENERAL INFORMATION WORK PACKAGE	R	R	B.5.2	**<ginfowp>**
Scope	R	R	B.5.2.3	**<scope>**
Maintenance forms, records, and reports	R	R	B.5.2.4	**<mfrr>**
Reporting Equipment Improvement Recommendations (EIR)	R	R	B.5.2.5	**<eir>**
Hand receipt (HR)			B.5.2.6	**<handreceipt>**
Corrosion Prevention and Control (CPC)	R	R	B.5.2.7	**<cpcdata>**
Ozone Depleting Substances (ODS)			B.5.2.8	**<odsdata>**
Destruction of Army materiel to prevent enemy use	R	R	B.5.2.9	**<destructmat>**
Preparation for storage or shipment	R	R	B.5.2.10	**<pssref>**
Transportability guidance	R	R	B.5.2.11	**<transportability>**
Warranty information			B.5.2.12	**<wrntyref>**
Nomenclature cross-reference list			B.5.2.13	**<nomenreflist>**
List of abbreviations/acronyms	R	R	B.5.2.14	**<loa>**
Quality Assurance (QA)			B.5.2.15	**<qainfo>**
Quality of material	R	R	B.5.2.16	**<qual.mat.info>**
Safety, care, and handling			B.5.2.17	**<sftyinfo>**
Nuclear hardness			B.5.2.18	**<hcp>**

Source: https://assist.dla.mil -- Downloaded: 2016-12-09T23:24Z
Check the source to verify that this is the current version before use.

TABLE A-VII. DMWR/NMWR requirements matrix for _____.

DMWR/NMWR Content	DMWR DMWR with RPSTL	NMWR NMWR with RPSTL	MIL-STD-40051-2C Reference	Element Name
Calibration			B.5.2.19	**<calref>**
Item unique identification (IUID)			B.5.2.20	**<iuid>**
Engineering Change Proposals (ECP)	R	R	B.5.2.21	**<ecp>**
Modifications			B.5.2.22	**<modification>**
Deviations and exceptions	R	R	B.5.2.23	**<deviation>**
Mobilization requirements	R	R	B.5.2.24	**<mobreq>**
Critical Safety Items (CSI) (Aircraft only)			B.5.2.25	**<csireq>**
Cost considerations	R	R	B.5.2.26	**<cost>**
Supporting information for repair parts, special tools, TMDE, and support equipment			B.5.2.27	**<supdata>**
Copyright credit line			B.5.2.28	**<copyrt>**
EQUIPMENT DESCRIPTION AND DATA WORK PACKAGE	R	R	B.5.3	**<descwp>**
Equipment characteristics, capabilities, and features	R	R	B.5.3.3	**<eqpinfo>**
Location and description of major components	R	R	B.5.3.4	**<locdesc>**
Equipment differences	R	R	B.5.3.5	**<eqpdiff>**
Equipment data	R	R	B.5.3.6	**<eqpdata>**
THEORY OF OPERATION WORK PACKAGE			B.5.4	**<thrywp>**
CHAPTER X. DMWR/NMWR TROUBLESHOOTING PROCEDURES ***NOTE*** *The notation (*) indicates that at least one of the these content items shall be included*	**R**	**R**	APPENDIX D D.5.4.3	**<tim> <troubledmwrnmwrcategory>**
INTRODUCTION WORK PACKAGE			D.5.5.3	**<tsintrowp>**
TROUBLESHOOTING INDEX WORK PACKAGE			D.5.5.5	**<tsindxwp>**
PRESHOP ANALYSIS WORK PACKAGE	R	R	D.5.5.6	**<pshopanalwp>**
COMPONENT CHECKLIST WORK PACKAGE			D.5.5.7	**<compchklistwp>**

Source: https://assist.dla.mil -- Downloaded: 2016-12-09T23:24Z
Check the source to verify that this is the current version before use.

TABLE A-VII. DMWR/NMWR requirements matrix for _____.

DMWR/NMWR Content	DMWR DMWR with RPSTL	NMWR NMWR with RPSTL	MIL-STD-40051-2C Reference	Element Name
**OPERATIONAL CHECKOUT WORK PACKAGES*			D.5.5.8.3	**<opcheckwp>**
**TROUBLESHOOTING WORK PACKAGES*			D.5.5.8.4	**<tswp>**
**COMBINED OPERATIONAL CHECKOUT AND TROUBLESHOOTING WORK PACKAGES*			D.5.5.8.5	**<opcheck-tswp>**
CHAPTER X. DEPOT MAINTENANCE INSTRUCTIONS	**R**	**R**	APPENDIX E E.5.2.4	**<mim>** **<depotcategory>**
PRESERVATION, PACKAGING, AND MARKING GENERAL INFORMATION WORK PACKAGE	R	R	E.5.3.9.1	**<ppmgeninfowp>**
EQUIPMENT/USER FITTING INSTRUCTIONS WORK PACKAGE			E.5.3.3	**<perseqpwp>**
MAINTENANCE WORK PACKAGES	R	R	E.5.3.5	**<maintwp>**
Maintenance tasks	R	R	E.5.3.5.3	**<maintsk>**
Inspect			E.5.3.5.3.2	**<inspect>**
Test			E.5.3.5.3.3	**<test>**
Service			E.5.3.5.3.4	**<service>**
Adjust			E.5.3.5.3.5	**<adjust>**
Align			E.5.3.5.3.6	**<align>**
Calibrate			E.5.3.5.3.7	**<calibration>**
Remove			E.5.3.5.3.8	**<remove>**
Install			E.5.3.5.3.9	**<install>**
Replace			E.5.3.5.3.10	**<replace>**
Repair			E.5.3.5.3.11	**<repair>**
Paint			E.5.3.5.3.12	**<paint>**
Overhaul			E.5.3.5.3.13	**<overhaul>**
Rebuild			E.5.3.5.3.14	**<rebuild>**
Lubricate			E.5.3.5.3.15	**<lube>**
Mark			E.5.3.5.3.16	**<mark>**
Pack			E.5.3.5.3.17	**<pack>**
Unpack			E.5.3.5.3.18	**<unpack>**
Preserve			E.5.3.5.3.19	**<preservation>**
Prepare for use			E.5.3.5.3.20	**<prepforuse>**

Source: https://assist.dla.mil -- Downloaded: 2016-12-09T23:24Z
Check the source to verify that this is the current version before use.

TABLE A-VII. DMWR/NMWR requirements matrix for _____.

DMWR/NMWR Content	DMWR DMWR with RPSTL	NMWR NMWR with RPSTL	MIL-STD-40051-2C Reference	Element Name
Assemble			E.5.3.5.3.21	**<assem>**
Disassemble			E.5.3.5.3.22	**<disassem>**
Clean			E.5.3.5.3.23	**<clean>**
Nondestructive inspection			E.5.3.5.3.24	**<ndi>**
Radio interference suppression			E.5.3.5.3.25	**<ris>**
Place in service			E.5.3.5.3.26	**<pis>**
Towing			E.5.3.5.3.27	**<tow>**
Jacking			E.5.3.5.3.28	**<jack>**
Parking			E.5.3.5.3.29	**<park>**
Mooring			E.5.3.5.3.30	**<moor>**
Covering			E.5.3.5.3.31	**<cover>**
Hoisting			E.5.3.5.3.32	**<hoist>**
Sling loading			E.5.3.5.3.33	**<sling>**
External power			E.5.3.5.3.34	**<extpwr>**
Preparation for storage	R	R	E.5.3.5.3.35	**<prepstore>**
Preparation for shipment	R	R	E.5.3.5.3.36	**<prepship>**
Transport	R	R	E.5.3.5.3.37	**<transport>**
Arm			E.5.3.5.3.38	**<arm>**
Load			E.5.3.5.3.39	**<load>**
Unload			E.5.3.5.3.40	**<unload>**
Install peripheral device			E.5.3.5.3.41	**<installperdev>**
Uninstall peripheral device			E.5.3.5.3.42	**<uninstallperdev>**
Upgrade/patch software			E.5.3.5.3.43	**<upgrade>**
Configure software			E.5.3.5.3.44	**<configure>**
Debug software			E.5.3.5.3.45	**<debug>**
Additional maintenance task			E.5.3.5.3.46	**<other.maintsk>**
Follow-on maintenance			E.5.3.5.3.47	**<followon.maintsk>**
GENERAL MAINTENANCE WORK PACKAGE			E.5.3.7	**<gen.maintwp>**
LUBRICATION INSTRUCTIONS WORK PACKAGE			E.5.3.8	**<lubewp>**
FACILITIES WORK PACKAGE			E.5.3.9.2	**<facilwp>**
OVERHAUL INSPECTION PROCEDURES WORK PACKAGE			E.5.3.9.3	**<oipwp>**
DEPOT MOBILIZATION REQUIREMENTS WORK PACKAGE			E.5.3.9.4	**<mobilwp>**

Source: https://assist.dla.mil -- Downloaded: 2016-12-09T23:24Z
Check the source to verify that this is the current version before use.

TABLE A-VII. DMWR/NMWR requirements matrix for _____.

DMWR/NMWR Content	DMWR DMWR with RPSTL	NMWR NMWR with RPSTL	MIL-STD-40051-2C Reference	Element Name
QUALITY ASSURANCE REQUIREMENTS WORK PACKAGE	R	R	E.5.3.9.5	**<qawp>**
ILLUSTRATED LIST OF MANUFACTURED ITEMS WORK PACKAGE			E.5.3.10	
Illustrated list of manufactured items introduction work package	R	R	E.5.3.10.1	**<manu_items_introwp>**
Manufacturing procedures work package	R	R	E.5.3.10.2	**<manuwp>**
TORQUE LIMITS WORK PACKAGE			E.5.3.11	**<torquewp>**
AIRCRAFT INVENTORY MASTER GUIDE WORK PACKAGE (AIRCRAFT ONLY)			E.5.3.13.2	**<inventorywp>**
STORAGE OF AIRCRAFT WORK PACKAGE WORK PACKAGE (AIRCRAFT ONLY)			E.5.3.13.3	**<storagewp>**
WIRING DIAGRAMS WORK PACKAGE			E.5.3.12	**<wiringwp>**
CHAPTER X. AUXILIARY EQUIPMENT MAINTENANCE INSTRUCTIONS			APPENDIX E E.5.2.6	**<mim> <auxiliarycategory>**
AUXILIARY EQUIPMENT MAINTENANCE WORK PACKAGE			E.5.3.14	**<auxeqpwp>**
ILLUSTRATED LIST OF MANUFACTURED ITEMS WORK PACKAGE			E.5.3.10	
Illustrated list of manufactured items introduction work package	R	R	E.5.3.10.1	**<manu_items_introwp>**
Manufacturing procedures work package	R	R	E.5.3.10.2	**<manuwp>**
TORQUE LIMITS WORK PACKAGE			E.5.3.11	**<torquewp>**
WIRING DIAGRAMS WORK PACKAGE			E.5.3.12	**<wiringwp>**
CHAPTER X. AMMUNITION MAINTENANCE INSTRUCTIONS			APPENDIX E E.5.2.7	**<mim> <ammunitioncategory>**
AMMUNITION MAINTENANCE WORK PACKAGE			E.5.3.15.1	**<ammowp>**
AMMUNITION MARKING INFORMATION WORK PACKAGE			E.5.3.15.2	**<ammo.markingwp>**

Source: https://assist.dla.mil -- Downloaded: 2016-12-09T23:24Z
Check the source to verify that this is the current version before use.

TABLE A-VII. DMWR/NMWR requirements matrix for _____.

DMWR/NMWR Content	DMWR DMWR with RPSTL	NMWR NMWR with RPSTL	MIL-STD-40051-2C Reference	Element Name
FOREIGN AMMUNITION (NATO) WORK PACKAGE			E.5.3.15.3	**<natowp>**
SOFTWARE INFORMATION			Appendix M	**<soim> <softwarecategory>**
SOFTWARE GENERAL INFORMATION WORK PACKAGE	R	R	M.5.3.1	**<softginfowp>**
System Overview	R	R	M.5.3.1.6	**<softsysover>**
Document Overview	R	R	M.5.3.1.7	**<softdocover>**
SOFTWARE SUMMARY WORK PACKAGE	R	R	M.5.3.2	**<softsumwp>**
SOFTWARE EFFECTIVITY WORK PACKAGE			M.5.3.3	**<softeffectwp>**
DIFFERENCES BETWEEN SOFTWARE VERSIONS WORK PACKAGE			M.5.3.4	**<softdiffversionwp>**
FEATURES AND CAPAIBLITIES WORK PACKAGE	R	R	M.5.4.1	**<softfeaturescapwp>**
SCREEN DISPLAYS WORK PACKAGE	R	R	M.5.4.2	**<softscreendisplaywp>**
MENUS/DIRECTORIES WORK PACKAGE	R	R	M.5.4.3	**<softmenuwp>**
TOOLS AND BUTTONS WORK PACKAGES	R	R	M.5.4.4	**<softtoolswp>**
SECURITY AND PRIVACY PROCEDURES WORK PACKAGE	R	R	M.5.5.1	**<softsecprivwp>**
SUPERVISORY CONTROLS WORK PACKAGE			M.5.5.2	**<softsuperctrlswp>**
POWERUP/STARTUP AND POWERDOWN/SHUTDOWN PROCEDURES WORK PACKAGE	R	R	M.5.5.3	**<softpowerupwp>**
ACCESSING/EXITING SOFTWARE WORK PACKAGE	R	R	M.5.5.4	**<softaccesswp>**
KEY COMMANDS WORK PACKAGE			M.5.5.5	**<softkeycmdswp>**
PROCESSES AND COMMANDS WORK PACKAGE			M.5.5.6	**<softproccmdwp>**
USER INTERFACE WORK PACKAGE			M.5.5.7	**<softguiwp>**
SOFTWARE OPERATING CONVENTIONS WORK PACKAGE			M.5.5.8	**<softopconventionswp>**

Source: https://assist.dla.mil -- Downloaded: 2016-12-09T23:24Z
Check the source to verify that this is the current version before use.

TABLE A-VII. DMWR/NMWR requirements matrix for _____.

DMWR/NMWR Content	DMWR DMWR with RPSTL	NMWR NMWR with RPSTL	MIL-STD-40051-2C Reference	Element Name
ADDITIONAL SOFTWARE OPERATION WP			M.5.5.9	**<softgenwp>**
MESSAGES WORK PACKAGE			M.5.6.3	**<softmessageswp>**
RECOVERY FROM ERRORS, MALFUNCTIONS, AND EMERGENCIES WORK PACKAGE			M.5.6.4	**<softerrorswp>**
CHAPTER X. **RPSTL** ***(DMWR, NMWR)*** ***(DMWR WITH RPSTL, NMWR WITH RPSTL***	**P** **R**	**P** **R**	APPENDIX F	**<pim>**
INTRODUCTION WORK PACKAGE	R	R	F.5.3.5	**<introwp>**
REPAIR PARTS LIST WORK PACKAGE	R	R	F.5.3.6	**<plwp>**
REPAIR PARTS FOR SPECIAL TOOLS WORK PACKAGE			F.5.3.7	**<stl_partswp>**
KIT PARTS LIST WORK PACKAGE			F.5.3.8	**<kitswp>**
BULK ITEMS WORK PACKAGE			F.5.3.9	**<bulk_itemswp>**
SPECIAL TOOLS LIST WORK PACKAGE			F.5.3.10	**<stlwp>**
NSN INDEX WORK PACKAGE	R	R	F.5.3.11.1	**<nsnindxwp>**
P/N INDEX WORK PACKAGE	R	R	F.5.3.11.2	**<pnindxwp>**
REFERENCE DESIGNATOR INDEX WORK PACKAGE			F.5.3.11.3	**<refdesindxwp>**
CHAPTER X. **SUPPORTING INFORMATION** ***NOTE*** *Applicable supporting information work packages shall be arranged in the order in which they are presented here and numbered accordingly.*	**R**	**R**	APPENDIX G	**<sim>**
REFERENCES WORK PACKAGE	R	R	G.5.2	**<refwp>**
EXPENDABLE AND DURABLE ITEMS LIST WORK PACKAGE	R	R	G.5.7	**<explistwp>**
TOOL IDENTIFICATION LIST WORK PACKAGE	R	R	G.5.8	**<toolidwp>**
MANDATORY REPLACEMENT PARTS WORK PACKAGE	R	R	G.5.9	**<mrplwp>**

Source: https://assist.dla.mil -- Downloaded: 2016-12-09T23:24Z
Check the source to verify that this is the current version before use.

TABLE A-VII. DMWR/NMWR requirements matrix for _____.

DMWR/NMWR Content	DMWR DMWR with RPSTL	NMWR NMWR with RPSTL	MIL-STD-40051-2C Reference	Element Name
CRITICAL SAFETY ITEMS (CSI) WORK PACKAGE (AIRCRAFT ONLY)	R	R	G.5.10	**<csi.wp>**
SUPPORT ITEMS WORK PACKAGE			G.5.11	**<supitemwp>**
ADDITIONAL SUPPORTING WORK PACKAGES			G.5.12	**<genwp>**
REAR MATTER	**R**	**R**	5.2.2	**<rear>**
Glossary			5.2.2.1	**<glossary>**
Alphabetical index			5.2.2.2	**<aindx>**
DA Form 2028	R	R	5.2.2.3	**<da2028>**
Authentication page	R	R	5.2.2.4	**<authent>**
Foldout pages			5.2.2.5	**<foldsect>**
Back cover	R	R	5.2.2.6	**<back>**

Legend

R - Required P - Prohibited Shaded - As required

Source: https://assist.dla.mil -- Downloaded: 2016-12-09T23:24Z
Check the source to verify that this is the current version before use.

TABLE A-VIII. DMWR with overhaul standards requirements matrix for _____.

DMWR/NMWR Content	DMWR with Overhaul Standards	DMWR with Overhaul Standards with RPSTL	MIL-STD-40051-2C Reference	Element Name
FRONT MATTER	**R**	**R**	5.2.1	**<paper.frnt>**
Front cover	R	R	5.2.1.1	**<frntcover>**
(MC) Promulgation letter			5.2.1.3	**<promulgation>**
Warning summary			5.2.1.4	**<warnsum>**
Change transmittal page			5.2.1.5	**<chgsheet>**
List of effective pages/work packages	R	R	5.2.1.6	**<loepwp>**
Title page	R	R	5.2.1.7	**<titleblk>**
Table of contents	R	R	5.2.1.9	**<contents>**
CHAPTER 1. GENERAL INFORMATION, EQUIPMENT DESCRIPTION, AND THEORY OF OPERATION	**R**	**R**	APPENDIX B	**<gim>**
GENERAL INFORMATION WORK PACKAGE	R	R	B.5.2	**<ginfowp>**
Scope	R	R	B.5.2.3	**<scope>**
Maintenance forms, records, and reports	R	R	B.5.2.4	**<mfrr>**
Reporting Equipment Improvement Recommendations (EIR)	R	R	B.5.2.5	**<eir>**
Hand Receipt (HR) manuals			B.5.2.6	**<handreceipt>**
Corrosion Prevention and Control (CPC)	R	R	B.5.2.7	**<cpcdata>**
Ozone Depleting Substances (ODS)			B.5.2.8	**<odsdata>**
Destruction of Army materiel to prevent enemy use	R	R	B.5.2.9	**<destructmat>**
Preparation for storage or shipment	R	R	B.5.2.10	**<pssref>**
Transportability guidance	R	R	B.5.2.11	**<transportability>**
Warranty information			B.5.2.12	**<wrntyref>**
Nomenclature cross-reference list			B.5.2.13	**<nomenreflist>**
List of abbreviations/acronyms	R	R	B.5.2.14	**<loa>**
Quality Assurance (QA)			B.5.2.15	**<qainfo>**
Quality of material	R	R	B.5.2.16	**<qual.mat.info>**
Safety, care, and handling			B.5.2.17	**<sftyinfo>**
Nuclear hardness			B.5.2.18	**<hcp>**
Calibration			B.5.2.19	**<calref>**
Item unique identification (IUID)			B.5.2.20	**<iuid>**
Engineering Change Proposals (ECP)	R	R	B.5.2.21	**<ecp>**
Modifications			B.5.2.22	**<modification>**

Source: https://assist.dla.mil -- Downloaded: 2016-12-09T23:24Z
Check the source to verify that this is the current version before use.

TABLE A-VIII. DMWR with overhaul standards requirements matrix for _____.

DMWR/NMWR Content	DMWR with Overhaul Standards	DMWR with Overhaul Standards with RPSTL	MIL-STD-40051-2C Reference	Element Name
Deviations and exceptions	R	R	B.5.2.23	**<deviation>**
Mobilization requirements	R	R	B.5.2.24	**<mobreq>**
Critical Safety Items (CSI) (Aircraft only)	R	R	B.5.2.25	**<csireq>**
Cost considerations	R	R	B.5.2.26	**<cost>**
Supporting information for repair parts, special tools, TMDE, and support equipment			B.5.2.27	**<supdata>**
Copyright credit line			B.5.2.28	**<copyrt>**
EQUIPMENT DESCRIPTION AND DATA WORK PACKAGE	R	R	B.5.3	**<descwp>**
Equipment characteristics, capabilities, and features	R	R	B.5.3.3	**<eqpinfo>**
Location and description of major components	R	R	B.5.3.4	**<locdesc>**
Equipment differences	R	R	B.5.3.5	**<eqpdiff>**
Equipment data	R	R	B.5.3.6	**<eqpdata>**
THEORY OF OPERATION WORK PACKAGE			B.5.4	**<thrywp>**
CHAPTER X. **TROUBLESHOOTING PROCEDURES** ***NOTE*** *The notation (*) indicates that at least one of the these content items shall be included*			APPENDIX D D.5.4.3	**<tim> <troubledmwrnmwr category>**
INTRODUCTION WORK PACKAGE			D.5.5.3	**<tsintrowp>**
TROUBLESHOOTING INDEX WORK PACKAGE			D.5.5.5	**<tsindxwp>**
PRESHOP ANALYSIS WORK PACKAGE	R	R	D.5.5.6	**<pshopanalwp>**
COMPONENT CHECKLIST WORK PACKAGE			D.5.5.7	**<compchklistwp>**
**OPERATIONAL CHECKOUT WORK PACKAGES*			D.5.5.8.3	**<opcheckwp>**
**TROUBLESHOOTING WORK PACKAGES*			D.5.5.8.4	**<tswp>**
**COMBINED OPERATIONAL CHECKOUT AND TROUBLESHOOTING WORK PACKAGES*			D.5.5.8.5	**<opcheck-tswp>**
CHAPTER X. **DEPOT** **MAINTENANCE INSTRUCTIONS**	**R**	**R**	APPENDIX E E.5.2.4	**<mim> <depotcategory>**
PRESERVATION, PACKAGING, AND MARKING GENERAL INFORMATION WORK PACKAGE	R	R	E.5.3.9.1	**<ppmgeninfowp>**
EQUIPMENT/USER FITTING INSTRUCTIONS WORK PACKAGE			E.5.3.3	**<perseqpwp>**
MAINTENANCE WORK PACKAGES	R	R	E.5.3.5	**<maintwp>**

Source: https://assist.dla.mil -- Downloaded: 2016-12-09T23:24Z
Check the source to verify that this is the current version before use.

TABLE A-VIII. DMWR with overhaul standards requirements matrix for _____.

DMWR/NMWR Content	DMWR with Overhaul Standards	DMWR with Overhaul Standards with RPSTL	MIL-STD-40051-2C Reference	Element Name
Maintenance tasks	R	R	E.5.3.5.3	**<maintsk>**
Inspect			E.5.3.5.3.2	**<inspect>**
Test			E.5.3.5.3.3	**<test>**
Service			E.5.3.5.3.4	**<service>**
Adjust			E.5.3.5.3.5	**<adjust>**
Align			E.5.3.5.3.6	**<align>**
Calibrate			E.5.3.5.3.7	**<calibration>**
Remove			E.5.3.5.3.8	**<remove>**
Install			E.5.3.5.3.9	**<install>**
Replace			E.5.3.5.3.10	**<replace>**
Repair			E.5.3.5.3.11	**<repair>**
Paint			E.5.3.5.3.12	**<paint>**
Overhaul			E.5.3.5.3.13	**<overhaul>**
Rebuild			E.5.3.5.3.14	**<rebuild>**
Lubricate			E.5.3.5.3.15	**<lube>**
Mark			E.5.3.5.3.16	**<mark>**
Pack			E.5.3.5.3.17	**<pack>**
Unpack			E.5.3.5.3.18	**<unpack>**
Preserve			E.5.3.5.3.19	**<preservation>**
Prepare for use			E.5.3.5.3.20	**<prepforuse>**
Assemble			E.5.3.5.3.21	**<assem>**
Disassemble			E.5.3.5.3.22	**<disassem>**
Clean			E.5.3.5.3.23	**<clean>**
Nondestructive inspection			E.5.3.5.3.24	**<ndi>**
Radio interference suppression			E.5.3.5.3.25	**<ris>**
Place in service			E.5.3.5.3.26	**<pis>**
Towing			E.5.3.5.3.27	**<tow>**
Jacking			E.5.3.5.3.28	**<jack>**
Parking			E.5.3.5.3.29	**<park>**
Mooring			E.5.3.5.3.30	**<moor>**
Covering			E.5.3.5.3.31	**<cover>**
Hoisting			E.5.3.5.3.32	**<hoist>**
Sling loading			E.5.3.5.3.33	**<sling>**
External power			E.5.3.5.3.34	**<extpwr>**

Source: https://assist.dla.mil -- Downloaded: 2016-12-09T23:24Z
Check the source to verify that this is the current version before use.

TABLE A-VIII. DMWR with overhaul standards requirements matrix for _____.

DMWR/NMWR Content	DMWR with Overhaul Standards	DMWR with Overhaul Standards with RPSTL	MIL-STD-40051-2C Reference	Element Name
Preparation for storage	R	R	E.5.3.5.3.35	**<prepstore>**
Preparation for shipment	R	R	E.5.3.5.3.36	**<prepship>**
Transport	R	R	E.5.3.5.3.37	**<transport>**
Arm			E.5.3.5.3.38	**<arm>**
Load			E.5.3.5.3.39	**<load>**
Unload			E.5.3.5.3.40	**<unload>**
Install peripheral device			E.5.3.5.3.41	**<installperdev>**
Uninstall peripheral device			E.5.3.5.3.42	**<uninstallperdev>**
Upgrade/patch software			E.5.3.5.3.43	**<upgrade>**
Configure software			E.5.3.5.3.44	**<configure>**
Debug software			E.5.3.5.3.45	**<debug>**
Additional maintenance task			E.5.3.5.3.46	**<other.maintsk>**
Follow-on maintenance			E.5.3.5.3.47	**<followon.maintsk>**
GENERAL MAINTENANCE WORK PACKAGE			E.5.3.7	**<gen.maintwp>**
LUBRICATION INSTRUCTIONS WORK PACKAGE			E.5.3.8	**<lubewp>**
FACILITIES WORK PACKAGE			E.5.3.9.2	**<facilwp>**
OVERHAUL INSPECTION PROCEDURES WORK PACKAGE			E.5.3.9.3	**<oipwp>**
DEPOT MOBILIZATION REQUIREMENTS WORK PACKAGE	R	R	E.5.3.9.4	**<mobilwp>**
QUALITY ASSURANCE REQUIREMENTS WORK PACKAGE	R	R	E.5.3.9.5	**<qawp>**
ILLUSTRATED LIST OF MANUFACTURED ITEMS WORK PACKAGES			E.5.3.10	
Illustrated list of manufactured items introduction work package	R	R	E.5.3.10.1	**<manu_items_introwp>**
Manufacturing procedures work package	R	R	E.5.3.10.2	**<manuwp>**
TORQUE LIMITS WORK PACKAGE			E.5.3.11	**<torquewp>**
AIRCRAFT INVENTORY MASTER GUIDE WORK PACKAGE (AIRCRAFT ONLY)			E.5.3.13.2	**<inventorywp>**
STORAGE OF AIRCRAFT WORK PACKAGE WORK PACKAGE (AIRCRAFT ONLY)			E.5.3.13.3	**<storagewp>**
WIRING DIAGRAMS WORK PACKAGE			E.5.3.12	**<wiringwp>**

Source: https://assist.dla.mil -- Downloaded: 2016-12-09T23:24Z
Check the source to verify that this is the current version before use.

TABLE A-VIII. DMWR with overhaul standards requirements matrix for _____.

DMWR/NMWR Content	DMWR with Overhaul Standards	DMWR with Overhaul Standards with RPSTL	MIL-STD-40051-2C Reference	Element Name
CHAPTER X. AUXILIARY EQUIPMENT MAINTENANCE INSTRUCTIONS			APPENDIX E E.5.2.6	**<mim> <auxiliarycategory>**
AUXILIARY EQUIPMENT MAINTENANCE WORK PACKAGE			E.5.3.14	**<auxeqpwp>**
ILLUSTRATED LIST OF MANUFACTURED ITEMS WORK PACKAGES			E.5.3.10	
Illustrated list of manufactured items introduction work package	R	R	E.5.3.10.1	**<manu_items_introwp>**
Manufacturing procedures work package	R	R	E.5.3.10.2	**<manuwp>**
TORQUE LIMITS WORK PACKAGE			E.5.3.11	**<torquewp>**
WIRING DIAGRAMS WORK PACKAGE			E.5.3.12	**<wiringwp>**
CHAPTER X. AMMUNITION MAINTENANCE INSTRUCTIONS			APPENDIX E E.5.2.7	**<mim> <ammunitioncategory>**
AMMUNITION MAINTENANCE WORK PACKAGE			E.5.3.16.1	**<ammowp>**
AMMUNITION MARKING INFORMATION WORK PACKAGE			E.5.3.16.2	**<ammo.markingwp>**
FOREIGN AMMUNITION (NATO) WORK PACKAGE			E.5.3.16.3	**<natowp>**
SOFTWARE INFORMATION			Appendix M	**<soim> <softwarecategory>**
SOFTWARE GENERAL INFORMATION WORK PACKAGE	R	R	M.5.3.1	**<softginfowp>**
System Overview	R	R	M.5.3.1.6	**<softsysover>**
Document Overview	R	R	M.5.3.1.7	**<softdocover>**
SOFTWARE SUMMARY WORK PACKAGE	R	R	M.5.3.2	**<softsumwp>**
SOFTWARE EFFECTIVITY WORK PACKAGE			M.5.3.3	**<softeffectwp>**
DIFFERENCES BETWEEN SOFTWARE VERSIONS WORK PACKAGE			M.5.3.4	**<softdiffversionwp>**
FEATURES AND CAPAIBLITIES WORK PACKAGE	R	R	M.5.4.1	**<softfeaturescapwp>**
SCREEN DISPLAYS WORK PACKAGE	R	R	M.5.4.2	**<softscreendisplaywp>**
MENUS/DIRECTORIES WORK PACKAGE	R	R	M.5.4.3	**<softmenuwp>**
TOOLS AND BUTTONS WORK PACKAGES	R	R	M.5.4.4	**<softtoolswp>**

Source: https://assist.dla.mil -- Downloaded: 2016-12-09T23:24Z
Check the source to verify that this is the current version before use.

TABLE A-VIII. DMWR with overhaul standards requirements matrix for _____.

DMWR/NMWR Content	DMWR with Overhaul Standards	DMWR with Overhaul Standards with RPSTL	MIL-STD-40051-2C Reference	Element Name
SECURITY AND PRIVACY PROCEDURES WORK PACKAGE	R	R	M.5.5.1	**<softsecprivwp>**
SUPERVISORY CONTROLS WORK PACKAGE			M.5.5.2	**<softsuperctrlswp>**
POWERUP/STARTUP AND POWERDOWN/SHUTDOWN PROCEDURES WORK PACKAGE	R	R	M.5.5.3	**<softpowerupwp>**
ACCESSING/EXITING SOFTWARE WORK PACKAGE	R	R	M.5.5.4	**<softaccesswp>**
KEY COMMANDS WORK PACKAGE			M.5.5.5	**<softkeycmdswp>**
PROCESSES AND COMMANDS WORK PACKAGE			M.5.5.6	**<softproccmdwp>**
USER INTERFACE WORK PACKAGE			M.5.5.7	**<softguiwp>**
SOFTWARE OPERATING CONVENTIONS WORK PACKAGE			M.5.5.8	**<softopconventionswp>**
ADDITIONAL SOFTWARE OPERATION WP			M.5.5.9	**<softgenwp>**
MESSAGES WORK PACKAGE			M.5.6.3	**<softmessageswp>**
RECOVERY FROM ERRORS, MALFUNCTIONS, AND EMERGENCIES WORK PACKAGE			M.5.6.4	**<softerrorswp>**
CHAPTER X. **RPSTL** ***(DMWR WITH OVERHAUL STANDARDS)*** ***(DMWR WITH OVERHAUL STANDARDS WITH RPSTL)***	**P** **R**	**P** **R**	APPENDIX F	**<pim>**
INTRODUCTION WORK PACKAGE	R	R	F.5.3.5	**<introwp>**
REPAIR PARTS LIST WORK PACKAGE	R	R	F.5.3.6	**<plwp>**
REPAIR PARTS FOR SPECIAL TOOLS WORK PACKAGE			F.5.3.7	**<stl_partswp>**
KIT PARTS LIST WORK PACKAGE			F.5.3.8	**<kitswp>**
BULK ITEMS WORK PACKAGE			F.5.3.9	**<bulk_itemswp>**
SPECIAL TOOLS LIST WORK PACKAGE			F.5.3.10	**<stlwp>**
NSN INDEX WORK PACKAGE	R	R	F.5.3.11.1	**<nsnindxwp>**
P/N INDEX WORK PACKAGE	R	R	F.5.3.11.2	**<pnindxwp>**
REFERENCE DESIGNATOR INDEX WORK PACKAGE			F.5.3.11.3	**<refdesindxwp>**

Source: https://assist.dla.mil -- Downloaded: 2016-12-09T23:24Z
Check the source to verify that this is the current version before use.

TABLE A-VIII. DMWR with overhaul standards requirements matrix for _____.

DMWR/NMWR Content	DMWR with Overhaul Standards	DMWR with Overhaul Standards with RPSTL	MIL-STD-40051-2C Reference	Element Name
CHAPTER X. SUPPORTING INFORMATION ***NOTE*** *Applicable supporting information work packages shall be arranged in the order in which they are presented here and numbered accordingly.*	**R**	**R**	APPENDIX G	**<sim>**
REFERENCES WORK PACKAGE	R	R	G.5.2	**<refwp>**
EXPENDABLE AND DURABLE ITEMS LIST WORK PACKAGE	R	R	G.5.7	**<explistwp>**
TOOL IDENTIFICATION LIST WORK PACKAGE	R	R	G.5.8	**<toolidwp>**
MANDATORY REPLACEMENT PARTS WORK PACKAGE	R	R	G.5.9	**<mrplwp>**
CRITICAL SAFETY ITEMS (CSI) WORK PACKAGE (AIRCRAFT ONLY)	R	R	G.5.10	**<csi.wp>**
SUPPORT ITEMS WORK PACKAGE			G.5.11	**<supitemwp>**
ADDITIONAL SUPPORTING WORK PACKAGES			G.5.12	**<genwp>**
REAR MATTER	**R**	**R**	5.2.2	**<rear>**
Glossary			5.2.2.1	**<glossary>**
Alphabetical index			5.2.2.2	**<aindx>**
DA Form 2028	R	R	5.2.2.3	**<da2028>**
Authentication page	R	R	5.2.2.4	**<authent>**
Foldout pages			5.2.2.5	**<foldsect>**
Back cover	R	R	5.2.2.6	**<back>**

Legend

R - Required

P - Prohibited

Shaded - As Required

Source: https://assist.dla.mil -- Downloaded: 2016-12-09T23:24Z
Check the source to verify that this is the current version before use.

This page intentionally left blank.

Source: https://assist.dla.mil -- Downloaded: 2016-12-09T23:24Z
Check the source to verify that this is the current version before use.

TABLE A-IX. Aircraft troubleshooting requirements matrix for _____.

TM Content	Aircraft Troubleshooting	MIL-STD-40051-2C Reference	Element Name
FRONT MATTER	**R**	5.2.1	**<paper.frnt>**
Front cover	R	5.2.1.1	**<frntcover>**
(MC) Promulgation letter		5.2.1.3	**<promulgation>**
Warning summary		5.2.1.4	**<warnsum>**
Change transmittal		5.2.1.5	**<chgsheet>**
List of effective pages/work packages	R	5.2.1.6	**<loepwp>**
Title page	R	5.2.1.7	**<titleblk>**
Table of contents	R	5.2.1.9	**<contents>**
How to use this manual	R	5.2.1.10	**<howtouse>**
CHAPTER X. **AVIATION TROUBLESHOOTING PROCEDURES** ***NOTE*** *The notation (*) indicates that at least one of the these content items shall be included*	**R**	APPENDIX D D.5.4.1	**<tim>** **<troubleaviationcategory>**
INTRODUCTION WORK PACKAGE	R	D.5.5.3	**<tsintrowp>**
TECHNICAL DESCRIPTION WORK PACKAGES		D.5.5.4	**<techdescwp>**
Equipment description and data		D.5.5.4.3	**<descproc>**
Controls and indicators		D.5.5.4.4	**<ctrlindproc>**
Theory of operation		D.5.5.4.5	**<thryproc>**
TROUBLESHOOTING INDEX WORK PACKAGE		D.5.5.5	**<tsindxwp>**
**OPERATIONAL CHECKOUT WORK PACKAGES*		D.5.5.8.3	**<opcheckwp>**
**TROUBLESHOOTING WORK PACKAGES*		D.5.5.8.4	**<tswp>**
**COMBINED OPERATIONAL CHECKOUT AND TROUBLESHOOTING WORK PACKAGES*		D.5.5.8.5	**<opcheck-tswp>**
REAR MATTER	**R**	5.2.2	**<rear>**
Glossary		5.2.2.1	**<glossary>**
Alphabetical index		5.2.2.2	**<aindx>**
DA Form 2028	R	5.2.2.3	**<da2028>**
Authentication page	R	5.2.2.4	**<authent>**
Foldout pages		5.2.2.5	**<foldsect>**
Back cover	R	5.2.2.6	**<back>**

Legend

R - Required

P - Prohibited

Shaded - As Required

Source: https://assist.dla.mil -- Downloaded: 2016-12-09T23:24Z
Check the source to verify that this is the current version before use.

This page intentionally left blank.

Source: https://assist.dla.mil -- Downloaded: 2016-12-09T23:24Z
Check the source to verify that this is the current version before use.

TABLE A-X. Aircraft PMS or PMD requirements matrix for _____.

TM Content	Aircraft PMS/PMD	MIL-STD-40051-2C Reference	Element Name
PREVENTIVE MAINTENANCE SERVICES / PREVENTIVE MAINTENANCE DAILY			**<pms>**
FRONT MATTER	**R**	5.2.1	**<paper.frnt>**
Front cover	R	5.2.1.1	**<frntcover>**
(MC) Promulgation letter		5.2.1.3	**<promulgation>**
Warning summary		5.2.1.4	**<warnsum>**
Change transmittal page		5.2.1.5	**<chgsheet>**
List of effective pages/work packages	R	5.2.1.6	**<loepwp>**
Title page with warning data	R	5.2.1.7	**<titleblk>**
CHAPTER 1. GENERAL INFORMATION	**R**	APPENDIX B	
GENERAL INFORMATION WORK PACKAGE	R	B.5.5	**<pms-ginfowp>**
Maintenance activities	R	B.5.5.3	**<scope>**
General information	R	B.5.5.4	**<pms-geninfo>**
CHAPTER X. PREVENTIVE MAINTENANCE SERVICES MAINTENANCE INFORMATION CHAPTER	**R**	APPENDIX E E.5.2.11	**<mim>** **<pmscategory>**
PMS/PMD INSPECTION WORK PACKAGE	R	E.5.3.16	**<pms-inspecwp>**
REAR MATTER	**R**	5.2.2	**<rear>**
DA Form 2028	R	5.2.2.3	**<da2028>**
Authentication page	R	5.2.2.4	**<authent>**
Back cover	R	5.2.2.6	**<back>**

Legend

R - Required

P - Prohibited

Shaded - As Required

Source: https://assist.dla.mil -- Downloaded: 2016-12-09T23:24Z
Check the source to verify that this is the current version before use.

This page intentionally left blank.

Source: https://assist.dla.mil -- Downloaded: 2016-12-09T23:24Z
Check the source to verify that this is the current version before use.

TABLE A-XI. Aircraft phased maintenance requirements matrix for _____.

TM Content	Aircraft PM	MIL-STD-40051-2C Reference	Element Name
PHASED MAINTENANCE			**<pmi>**
FRONT MATTER	**R**	5.2.1	**<paper.frnt>**
Front cover	R	5.2.1.1	**<frntcover>**
(MC) Promulgation letter		5.2.1.3	**<promulgation>**
Warning summary		5.2.1.4	**<warnsum>**
Change transmittal page		5.2.1.5	**<chgsheet>**
List of effective pages/work packages	R	5.2.1.6	**<loepwp>**
Title page with warning data	R	5.2.1.7	**<titleblk>**
CHAPTER 1. GENERAL INFORMATION	**R**	APPENDIX B	
GENERAL INFORMATION WORK PACKAGE	R	B.5.6	**<pm-ginfowp>**
CHAPTER X. PHASED MAINTENANCE INSPECTION MAINTENANCE INFORMATION	**R**	APPENDIX E E.5.2.12	**<mim> <checklistcategory>**
PM INSPECTION WORK PACKAGE	R	E.5.3.17	**<pmi-cklistwp>**
REAR MATTER	**R**	5.2.2	**<rear>**
DA Form 2028	R	5.2.2.3	**<da2028>**
Authentication page	R	5.2.2.4	**<authent>**
Back cover	R	5.2.2.6	**<back>**

Legend

R - Required

P - Prohibited

Shaded - As Required

Source: https://assist.dla.mil -- Downloaded: 2016-12-09T23:24Z
Check the source to verify that this is the current version before use.

This page intentionally left blank.

Source: https://assist.dla.mil -- Downloaded: 2016-12-09T23:24Z
Check the source to verify that this is the current version before use.

TABLE A-XII. Ammunition requirements matrix for _____.

TM Content	Ammunition -10	Ammunition -13 -13&P	Ammunition -14 -14&P	MIL-STD-40051-2C Reference	Element Name
FRONT MATTER	**R**	**R**	**R**	5.2.1	**<paper.frnt>**
Front cover	R	R	R	5.2.1.1	**<frntcover>**
(MC) Promulgation letter				5.2.1.3	**<promulgation>**
Warning summary				5.2.1.4	**<warnsum>**
Change transmittal page				5.2.1.5	**<chgsheet>**
List of effective pages/work packages	R	R	R	5.2.1.6	**<loepwp>**
Title page	R	R	R	5.2.1.7	**<titleblk>**
Table of contents	R	R	R	5.2.1.9	**<contents>**
How to use this manual	R	R	R	5.2.1.10	**<howtouse>**
CHAPTER 1. GENERAL INFORMATION, EQUIPMENT DESCRIPTION, AND THEORY OF OPERATION	**R**	**R**	**R**	APPENDIX B	**<gim>**
GENERAL INFORMATION WORK PACKAGE	R	R	R	B.5.2	**<ginfowp>**
Scope	R	R	R	B.5.2.3	**<scope>**
Maintenance forms, records, and reports	R	R	R	B.5.2.4	**<mfrr>**
Reporting Equipment Improvement Recommendations (EIR)	R	R	R	B.5.2.5	**<eir>**
Hand Receipt (HR) manuals				B.5.2.6	**<handreceipt>**
Corrosion Prevention and Control (CPC)	R	R	R	B.5.2.7	**<cpcdata>**
Ozone Depleting Substances (ODS)				B.5.2.8	**<odsdata>**
Destruction of Army materiel to prevent enemy use	R	R	R	B.5.2.9	**<destructmat>**
Preparation for storage or shipment	R	R	R	B.5.2.10	**<pssref>**
Transportability guidance	R	R	R	B.5.2.11	**<transportability>**
Warranty information				B.5.2.12	**<wrntyref>**
Nomenclature cross-reference list				B.5.2.13	**<nomenreflist>**
List of abbreviations/acronyms	R	R	R	B.5.2.14	**<loa>**
Quality of material	P			B.5.2.16	**<qual.mat.info>**
Safety, care, and handling				B.5.2.17	**<sftyinfo>**
Nuclear hardness				B.5.2.18	**<hcp>**
Calibration				B.5.2.19	**<calref>**
Item unique identification (IUID)				B.5.2.20	**<iuid>**

Source: https://assist.dla.mil -- Downloaded: 2016-12-09T23:24Z
Check the source to verify that this is the current version before use.

TABLE A-XII. Ammunition requirements matrix for _____.

TM Content	Ammunition -10	Ammunition -13 -13&P	Ammunition -14 -14&P	MIL-STD-40051-2C Reference	Element Name
Supporting information for repair parts, special tools, TMDE, and support equipment	P			B.5.2.27	**<supdata>**
Copyright credit line				B.5.2.28	**<copyrt>**
EQUIPMENT DESCRIPTION AND DATA WORK PACKAGE	R	R	R	B.5.3	**<descwp>**
Equipment characteristics, capabilities, and features	R	R	R	B.5.3.3	**<eqpinfo>**
Location and description of major components	R	R	R	B.5.3.4	**<locdesc>**
Equipment differences	R	R	R	B.5.3.5	**<eqpdiff>**
Equipment data	R	R	R	B.5.3.6	**<eqpdata>**
THEORY OF OPERATION WORK PACKAGE				B.5.4	**<thrywp>**
CHAPTER X. OPERATOR INSTRUCTIONS	**R**	**R**	**R**	APPENDIX C	**<opim>**
DESCRIPTION AND USE OF OPERATOR CONTROLS AND INDICATORS WORK PACKAGE				C.5.2.2.1	**<ctrlindwp>**
OPERATION UNDER USUAL CONDITIONS WORK PACKAGE	R	R	R	C.5.2.2.2	**<opusualwp>**
Operation under usual tasks	R	R	R	C.5.2.2.2.3	**<opertsk>**
Security measures for electronic data				C.5.2.2.2.3.1	**<secref>**
Siting requirements				C.5.2.2.2.3.2	**<site>**
Shelter requirements				C.5.2.2.2.3.3	**<shelter>**
Assembly and preparation for use				C.5.2.2.2.3.4	**<prepforuse>**
Initial adjustments, before use and self-test				C.5.2.2.2.3.5	**<initial>**
Operating procedures	R	R	R	C.5.2.2.2.3.6	**<oper>**
Operating auxiliary equipment				C.5.2.2.2.3.8	**<operaux>**
Preparation for movement				C.5.2.2.2.3.9	**<prepmove>**
Decals and instruction plates				C.5.2.2.2.3.10	**<instructplt>**
OPERATION UNDER UNUSUAL CONDITIONS WORK PACKAGE	R	R	R	C.5.2.2.3	**<opunuwp>**
Operations under unusual tasks				C.5.2.2.3.3	**<opunutsk>**
Security measures for electronic data				C.5.2.2.3.3.1	**<secref>**
Unusual environment/weather	R	R	R	C.5.2.2.3.3.2	**<unusualenv>**
Fording and swimming				C.5.2.2.3.3.3	**<fording>**

Source: https://assist.dla.mil -- Downloaded: 2016-12-09T23:24Z
Check the source to verify that this is the current version before use.

TABLE A-XII. Ammunition requirements matrix for _____.

TM Content	Ammunition -10	Ammunition -13 -13&P	Ammunition -14 -14&P	MIL-STD-40051-2C Reference	Element Name
Interim Chemical, Biological, Radiological, Nuclear and Explosives (CBRNE) decontamination procedures				C.5.2.2.3.3.4	**<decon>**
Jamming and Electronic Countermeasures (ECM) procedures				C.5.2.2.3.3.5	**<ecm>**
Degraded operation procedures				C.5.2.2.3.3.6	**<degraded>**
Decals and instruction plates				C.5.2.2.3.3.7	**<instructplt>**
EMERGENCY WORK PACKAGE				C.5.2.2.4	**<emergencywp>**
CHAPTER X. MAINTENANCE INSTRUCTIONS	**R**	**R**	**R**	APPENDIX E E.5.2.3	**<mim> <maintenancecategory>**
SERVICE UPON RECEIPT WORK PACKAGE	P	R	R	E.5.3.2	**<surwp>**
Service upon receipt tasks	P	R	R	E.5.3.2.3	**<surtsk>**
Siting	P			E.5.3.2.3.1	**<siting>**
Shelter requirements	P			E.5.3.2.3.2	**<shltr>**
Service upon receipt of materiel	P	R	R	E.5.3.2.3.3	**<surmat>**
Installation instructions	P			E.5.3.2.3.4	**<install>**
Preliminary servicing of equipment	P			E.5.3.2.3.5	**<preserv>**
Preliminary checks and adjustment of equipment	P			E.5.3.2.3.6	**<prechkadj>**
Preliminary calibration of equipment	P			E.5.3.2.3.7	**<precal>**
Circuit alignment	P			E.5.3.2.3.8	**<calign>**
Ammunition markings	P			E.5.3.2.3.9.1	**<mark>**
Classification of defects	P			E.5.3.2.3.9.2	**<ammo.defect>**
Ammunition handling	P			E.5.3.2.3.9.3	**<ammo.handling>**
Procedures to activate ammunition	P			E.5.3.2.3.9.4	**<arm>**
Additional maintenance task	P			E.5.3.2.3.10	**<other.surtsk>**
Follow-on maintenance	P			E.5.3.2.3.11	**<followon.maintsk>**
MAINTENANCE WORK PACKAGES	R	R	R	E.5.3.5	**<maintwp>**
Maintenance tasks	R	R	R	E.5.3.5.3	**<maintsk>**
Inspect				E.5.3.5.3.2	**<inspect>**
Test				E.5.3.5.3.3	**<test>**
Service				E.5.3.5.3.4	**<service>**
Adjust				E.5.3.5.3.5	**<adjust>**
Align				E.5.3.5.3.6	**<align>**

Source: https://assist.dla.mil -- Downloaded: 2016-12-09T23:24Z
Check the source to verify that this is the current version before use.

TABLE A-XII. Ammunition requirements matrix for _____.

TM Content	Ammunition -10	Ammunition -13 -13&P	Ammunition -14 -14&P	MIL-STD-40051-2C Reference	Element Name
Calibrate				E.5.3.5.3.7	**<calibration>**
Remove				E.5.3.5.3.8	**<remove>**
Install				E.5.3.5.3.9	**<install>**
Replace				E.5.3.5.3.10	**<replace>**
Repair				E.5.3.5.3.11	**<repair>**
Paint				E.5.3.5.3.12	**<paint>**
Overhaul				E.5.3.5.3.13	**<overhaul>**
Rebuild				E.5.3.5.3.14	**<rebuild>**
Lubricate				E.5.3.5.3.15	**<lube>**
Mark				E.5.3.5.3.16	**<mark>**
Pack				E.5.3.5.3.17	**<pack>**
Unpack				E.5.3.5.3.18	**<unpack>**
Preserve				E.5.3.5.3.19	**<preservation>**
Prepare for use				E.5.3.5.3.20	**<prepforuse>**
Assemble				E.5.3.5.3.21	**<assem>**
Disassemble				E.5.3.5.3.22	**<disassem>**
Clean				E.5.3.5.3.23	**<clean>**
Nondestructive inspection				E.5.3.5.3.24	**<ndi>**
Place in service				E.5.3.5.3.26	**<pis>**
Preparation for storage	R	R	R	E.5.3.5.3.35	**<prepstore>**
Preparation for shipment	R	R	R	E.5.3.5.3.36	**<prepship>**
Transport	R	R	R	E.5.3.5.3.37	**<transport>**
Arm				E.5.3.5.3.38	**<arm>**
Load				E.5.3.5.3.39	**<load>**
Unload				E.5.3.5.3.40	**<unload>**
Additional maintenance task				E.5.3.5.3.46	**<other.maintsk>**
Follow-on maintenance				E.5.3.5.3.47	**<followon.maintsk>**
GENERAL MAINTENANCE WORK PACKAGE				E.5.3.7	**<gen.maintwp>**
LUBRICATION INSTRUCTIONS WORK PACKAGE				E.5.3.8	**<lubewp>**
ILLUSTRATED LIST OF MANUFACTURED ITEMS WORK PACKAGES				E.5.3.10	
Illustrated list of manufactured items introduction work package				E.5.3.10.1	**<manu_items_introwp>**

Source: https://assist.dla.mil -- Downloaded: 2016-12-09T23:24Z
Check the source to verify that this is the current version before use.

TABLE A-XII. Ammunition requirements matrix for _____.

TM Content	Ammunition -10	Ammunition -13 -13&P	Ammunition -14 -14&P	MIL-STD-40051-2C Reference	Element Name
Manufacturing procedures work package				E.5.3.10.2	**<manuwp>**
TORQUE LIMITS WORK PACKAGE				E.5.3.11	**<torquewp>**
WIRING DIAGRAMS WORK PACKAGE	P			E.5.3.12	**<wiringwp>**
CHAPTER X. TEST AND INSPECTION MAINTENANCE INSTRUCTIONS				APPENDIX E E.5.2.8	**<mim> <testinspection category>**
MAINTENANCE WORK PACKAGES				E.5.3.5	**<maintwp>**
Inspection				E.5.3.5.3.2	**<inspect>**
Test				E.5.3.5.3.3	**<test>**
CHAPTER X. SHIPMENT/MOVEMENT AND STORAGE MAINTENANCE INSTRUCTIONS		**R**	**R**	APPENDIX E E.5.2.9	**<mim> <shipmentmovementstoragecategory>**
MAINTENANCE WORK PACKAGES		R	R	E.5.3.5	**<maintwp>**
Preparation for storage		R	R	E.5.3.5.3.35	**<prepstore>**
Preparation for shipment		R	R	E.5.3.5.3.36	**<prepship>**
Transport		R	R	E.5.3.5.3.37	**<transport>**
CHAPTER X. AMMUNITION MARKING MAINTENANCE INSTRUCTIONS		**R**	**R**	APPENDIX E E.5.2.10	**<mim> <ammomarkingcategory>**
AMMUNITION MARKING INFORMATION WORK PACKAGE		R	R	E.5.3.15.2	**<ammo.markingwp>**
CHAPTER X. DESTRUCTION OF EQUIPMENT TO PREVENT ENEMY USE *NOTE* *If a separate destruction of materiel manual is not developed for this equipment, then the destruction chapter must be included.*				APPENDIX H	**<dim>**
DESTRUCTION PROCEDURES INTRODUCTION WORK PACKAGE	R	R	R	H.5.3	**<destruct-introwp>**
Authority to destroy	R	R	R	H.5.3.3	**<authorize_to_destroy>**
Reporting destruction	R	R	R	H.5.3.4	**<report_destruct>**
General destruction information	R	R	R	H.5.3.5	**<general_destruct_info>**
Degree of instruction	R	R	R	H.5.3.6	**<degree_of_destruct>**

Source: https://assist.dla.mil -- Downloaded: 2016-12-09T23:24Z
Check the source to verify that this is the current version before use.

TABLE A-XII. Ammunition requirements matrix for _____.

TM Content	Ammunition -10	Ammunition -13 -13&P	Ammunition -14 -14&P	MIL-STD-40051-2C Reference	Element Name
Essential components and spare parts				H.5.3.7	**<component_spares>**
DESTRUCTION PROCEDURES WORK PACKAGE	R	R	R	H.5.4	**<destruct-materialwp>**
Parts list				H.5.4.3	**<essential_spares>**
Specific destruction procedures	R	R	R	H.5.4.4	**<proc>**
CHAPTER X. **RPSTL** ***(-10, -13, -14)*** ***(-13&P, -14&P)***	 **P** **P**	 **P** **R**	 **P** **R**	APPENDIX F	**<pim>**
INTRODUCTION WORK PACKAGE	P	R	R	F.5.3.5	**<introwp>**
REPAIR PARTS LIST WORK PACKAGE	P	R	R	F.5.3.6	**<plwp>**
REPAIR PARTS FOR SPECIAL TOOLS WORK PACKAGE	P			F.5.3.7	**<stl_partswp>**
KIT PARTS LIST WORK PACKAGE	P			F.5.3.8	**<kitswp>**
BULK ITEM WORK PACKAGE	P			F.5.3.9	**<bulk_itemswp>**
SPECIAL TOOLS LIST WORK PACKAGE	P			F.5.3.10	**<stlwp>**
NSN INDEX WORK PACKAGE	P	R	R	F.5.3.11.1	**<nsnindxwp>**
P/N INDEX WORK PACKAGE	P	R	R	F.5.3.11.2	**<pnindxwp>**
REFERENCE DESIGNATOR INDEX WORK PACKAGE	P			F.5.3.11.3	**<refdesindxwp>**
CHAPTER X. **SUPPORTING INFORMATION** ***NOTE*** *Applicable supporting information work packages shall be arranged in the order in which they are presented here and numbered accordingly.*	**R**	**R**	**R**	APPENDIX G	**<sim>**
REFERENCES WORK PACKAGE	R	R	R	G.5.2	**<refwp>**
INTRODUCTION FOR NON-AVIATION TWO-LEVEL MAC WORK PACKAGE	P	R	R	G.5.3.1	**<macintrowp>**
TWO-LEVEL MAC WORK PACKAGE	P	R	R	G.5.3.3	**<macwp>**
COMPONENTS OF END ITEM (COEI) AND BASIC ISSUE ITEMS (BII) LISTS WORK PACKAGE	R	R	R	G.5.4	**<coeibiiwp>**
ADDITIONAL AUTHORIZATION LIST (AAL) WORK PACKAGE				G.5.5	**<aalwp>**
EXPENDABLE AND DURABLE ITEMS LIST WORK PACKAGE	R	R	R	G.5.7	**<explistwp>**

Source: https://assist.dla.mil -- Downloaded: 2016-12-09T23:24Z
Check the source to verify that this is the current version before use.

TABLE A-XII. Ammunition requirements matrix for _____.

TM Content	Ammunition			MIL-STD-40051-2C Reference	Element Name
	-10	-13 -13&P	-14 -14&P		
TOOL IDENTIFICATION LIST WORK PACKAGE	P	R	R	G.5.8	**<toolidwp>**
ADDITIONAL SUPPORTING WORK PACKAGES				G.5.12	**<genwp>**
REAR MATTER	**R**	**R**	**R**	5.2.2	**<rear>**
Glossary				5.2.2.1	**<glossary>**
Alphabetical index				5.2.2.2	**<aindx>**
DA Form 2028	R	R	R	5.2.2.3	**<da2028>**
Authentication page	R	R	R	5.2.2.4	**<authent>**
Foldout pages				5.2.2.5	**<foldsect>**
Back cover	R	R	R	5.2.2.6	**<back>**

Legend

R - Required

P - Prohibited

Shaded - As Required

Source: https://assist.dla.mil -- Downloaded: 2016-12-09T23:24Z
Check the source to verify that this is the current version before use.

This page intentionally left blank.

Source: https://assist.dla.mil -- Downloaded: 2016-12-09T23:24Z
Check the source to verify that this is the current version before use.

TABLE A-XIII. Ammunition below depot sustainment requirements matrix for _____.

TM Content	Ammunition -40 -40&P	MIL-STD-40051-2C Reference	Element Name
FRONT MATTER	**R**	5.2.1	**<paper.frnt>**
Front cover	R	5.2.1.1	**<frntcover>**
(MC) Promulgation letter		5.2.1.3	**<promulgation>**
Warning summary		5.2.1.4	**<warnsum>**
Change transmittal page		5.2.1.5	**<chgsheet>**
List of effective pages/work packages	R	5.2.1.6	**<loepwp>**
Title page	R	5.2.1.7	**<titleblk>**
Table of contents	R	5.2.1.9	**<contents>**
How to use this manual	R	5.2.1.10	**<howtouse>**
CHAPTER 1. GENERAL INFORMATION, EQUIPMENT DESCRIPTION, AND THEORY OF OPERATION	**R**	APPENDIX B	**<gim>**
GENERAL INFORMATION WORK PACKAGE	R	B.5.2	**<ginfowp>**
Scope	R	B.5.2.3	**<scope>**
Maintenance forms, records, and reports	R	B.5.2.4	**<mfrr>**
Reporting Equipment Improvement Recommendations (EIR)	R	B.5.2.5	**<eir>**
Hand Receipt (HR) manuals		B.5.2.6	**<handreceipt>**
Corrosion Prevention and Control (CPC)	R	B.5.2.7	**<cpcdata>**
Ozone Depleting Substances (ODS)		B.5.2.8	**<odsdata>**
Destruction of Army materiel to prevent enemy use	R	B.5.2.9	**<destructmat>**
Preparation for storage or shipment	R	B.5.2.10	**<pssref>**
Transportability guidance	R	B.5.2.11	**<transportability>**
Warranty information		B.5.2.12	**<wrntyref>**
Nomenclature cross-reference list		B.5.2.13	**<nomenreflist>**
List of abbreviations	R	B.5.2.14	**<loa>**
Quality of material		B.5.2.16	**<qual.mat.info>**
Safety, care, and handling		B.5.2.17	**<sftyinfo>**
Nuclear hardness		B.5.2.18	**<hcp>**
Calibration		B.5.2.19	**<calref>**
Item unique identification		B.5.2.20	**<iuid>**

Source: https://assist.dla.mil -- Downloaded: 2016-12-09T23:24Z
Check the source to verify that this is the current version before use.

TABLE A-XIII. Ammunition below depot sustainment requirements matrix for _____.

TM Content	Ammunition -40 -40&P	MIL-STD-40051-2C Reference	Element Name
Supporting information for repair parts, special tools, TMDE, and support equipment		B.5.2.27	**<supdata>**
Copyright credit line		B.5.2.28	**<copyrt>**
EQUIPMENT DESCRIPTION AND DATA WORK PACKAGE	R	B.5.3	**<descwp>**
Equipment characteristics, capabilities, and features	R	B.5.3.3	**<eqpinfo>**
Location and description of major components	R	B.5.3.4	**<locdesc>**
Equipment differences	R	B.5.3.5	**<eqpdiff>**
Equipment data	R	B.5.3.6	**<eqpdata>**
THEORY OF OPERATION WORK PACKAGE		B.5.4	**<thrywp>**
CHAPTER X. MAINTENANCE INSTRUCTIONS	**R**	APPENDIX E E.5.2.3	**<mim> <maintenancecategory>**
MAINTENANCE WORK PACKAGES	R	E.5.3.5	**<maintwp>**
Maintenance tasks	R	E.5.3.5.3	**<maintsk>**
Inspect		E.5.3.5.3.2	**<inspect>**
Test		E.5.3.5.3.3	**<test>**
Service		E.5.3.5.3.4	**<service>**
Adjust		E.5.3.5.3.5	**<adjust>**
Align		E.5.3.5.3.6	**<align>**
Calibrate		E.5.3.5.3.7	**<calibration>**
Remove		E.5.3.5.3.8	**<remove>**
Install		E.5.3.5.3.9	**<install>**
Replace		E.5.3.5.3.10	**<replace>**
Repair		E.5.3.5.3.11	**<repair>**
Paint		E.5.3.5.3.12	**<paint>**
Overhaul		E.5.3.5.3.13	**<overhaul>**
Rebuild		E.5.3.5.3.14	**<rebuild>**
Lubricate		E.5.3.5.3.15	**<lube>**
Mark		E.5.3.5.3.16	**<mark>**
Pack		E.5.3.5.3.17	**<pack>**
Unpack		E.5.3.5.3.18	**<unpack>**
Preserve		E.5.3.5.3.19	**<preservation>**

Source: https://assist.dla.mil -- Downloaded: 2016-12-09T23:24Z
Check the source to verify that this is the current version before use.

TABLE A-XIII. Ammunition below depot sustainment requirements matrix for _____.

TM Content	Ammunition -40 -40&P	MIL-STD-40051-2C Reference	Element Name
Prepare for use		E.5.3.5.3.20	**<prepforuse>**
Assemble		E.5.3.5.3.21	**<assem>**
Disassemble		E.5.3.5.3.22	**<disassem>**
Clean		E.5.3.5.3.23	**<clean>**
Nondestructive inspection		E.5.3.5.3.24	**<ndi>**
Place in service		E.5.3.5.3.26	**<pis>**
Preparation for storage	R	E.5.3.5.3.35	**<prepstore>**
Preparation for shipment	R	E.5.3.5.3.36	**<prepship>**
Transport	R	E.5.3.5.3.37	**<transport>**
Arm		E.5.3.5.3.38	**<arm>**
Load		E.5.3.5.3.39	**<load>**
Unload		E.5.3.5.3.40	**<unload>**
Additional maintenance task		E.5.3.5.3.46	**<other.maintsk>**
Follow-on maintenance		E.5.3.5.3.47	**<followon.maintsk>**
GENERAL MAINTENANCE WORK PACKAGE		E.5.3.7	**<gen.maintwp>**
LUBRICATION INSTRUCTIONS WORK PACKAGE		E.5.3.8	**<lubewp>**
ILLUSTRATED LIST OF MANUFACTURED ITEMS WORK PACKAGES		E.5.3.10	
Illustrated list of manufactured items introduction work package	R	E.5.3.10.1	**<manu_items_introwp>**
Manufacturing procedures work package	R	E.5.3.10.2	**<manuwp>**
TORQUE LIMITS WORK PACKAGE		E.5.3.11	**<torquewp>**
WIRING DIAGRAMS WORK PACKAGE		E.5.3.12	**<wiringwp>**
CHAPTER X. TEST AND INSPECTION MAINTENANCE INSTRUCTIONS		APPENDIX E E.5.2.8	**<mim> <testinspectioncategory>**
MAINTENANCE WORK PACKAGES		E.5.3.5	**<maintwp>**
Inspect		E.5.3.5.3.2	**<inspect>**
Test		E.5.3.5.3.3	**<test>**

Source: https://assist.dla.mil -- Downloaded: 2016-12-09T23:24Z
Check the source to verify that this is the current version before use.

TABLE A-XIII. Ammunition below depot sustainment requirements matrix for _____.

TM Content	Ammunition -40 -40&P	MIL-STD-40051-2C Reference	Element Name
CHAPTER X. SHIPMENT/MOVEMENT AND STORAGE MAINTENANCE INSTRUCTIONS		APPENDIX E E.5.2.9	**<mim> <shipmentmovement storagecategory>**
MAINTENANCE WORK PACKAGES		E.5.3.5	**<maintwp>**
Preparation for storage		E.5.3.5.3.35	**<prepstore>**
Preparation for shipment		E.5.3.5.3.36	**<prepship>**
Transport		E.5.3.5.3.37	**<transport>**
CHAPTER X. AMMUNITION MARKING MAINTENANCE INSTRUCTIONS		APPENDIX E E.5.2.10	**<mim> <ammomarkingcategory>**
AMMUNITION MARKING INFORMATION WORK PACKAGE		E.5.3.15.2	**<ammo.markingwp>**
CHAPTER X. DESTRUCTION OF EQUIPMENT TO PREVENT ENEMY USE *NOTE* *If a separate destruction of materiel manual is not developed for this equipment, then the destruction chapter must be included.*		APPENDIX H	**<dim>**
DESTRUCTION PROCEDURES INTRODUCTION WORK PACKAGE	R	H.5.3	**<destruct-introwp>**
Authority to destroy	R	H.5.3.3	**<authorize_to_destroy>**
Reporting destruction	R	H.5.3.4	**<report_destruct>**
General destruction information	R	H.5.3.5	**<general_destruct_info>**
Degree of destruction	R	H.5.3.6	**<degree_of_destruct>**
Essential components and spare parts		H.5.3.7	**<component_spares>**
DESTRUCTION PROCEDURES WORK PACKAGE	R	H.5.4	**<destruct-materialwp>**
Parts list		H.5.4.3	**<essential_spares>**
Specific destruction procedures	R	H.5.4.4	**<proc>**
CHAPTER X. RPSTL *(-40)* *(-40&P)*	 **P** **R**	APPENDIX F	**<pim>**
INTRODUCTION WORK PACKAGE	R	F.5.3.5	**<introwp>**

Source: https://assist.dla.mil -- Downloaded: 2016-12-09T23:24Z
Check the source to verify that this is the current version before use.

TABLE A-XIII. Ammunition below depot sustainment requirements matrix for _____.

TM Content	Ammunition -40 -40&P	MIL-STD-40051-2C Reference	Element Name
REPAIR PARTS LIST WORK PACKAGE	R	F.5.3.6	**<plwp>**
REPAIR PARTS FOR SPECIAL TOOLS WORK PACKAGE		F.5.3.7	**<stl_partswp>**
KIT PARTS LIST WORK PACKAGE		F.5.3.8	**<kitswp>**
BULK ITEM WORK PACKAGE		F.5.3.9	**<bulk_itemswp>**
SPECIAL TOOLS LIST WORK PACKAGE		F.5.3.10	**<stlwp>**
NSN INDEX WORK PACKAGE	R	F.5.3.11.1	**<nsnindxwp>**
P/N INDEX WORK PACKAGE	R	F.5.3.11.2	**<pnindxwp>**
REFERENCE DESIGNATOR INDEX WORK PACKAGE		F.5.3.11.3	**<refdesindxwp>**
CHAPTER X. SUPPORTING INFORMATION ***NOTE*** *Applicable supporting information work packages shall be arranged in the order in which they are presented here and numbered accordingly.*	**R**	APPENDIX G	**<sim>**
REFERENCES WORK PACKAGE	R	G.5.2	**<refwp>**
EXPENDABLE AND DURABLE ITEMS WORK PACKAGE	R	G.5.6	**<explistwp>**
TOOL IDENTIFICATION LIST WORK PACKAGE	R	G.5.7	**<toolidwp>**
ADDITIONAL SUPPORTING WORK PACKAGES		G.5.11	**<genwp>**
REAR MATTER	**R**	5.2.2	**<rear>**
Glossary		5.2.2.1	**<glossary>**
Alphabetical index		5.2.2.2	**<aindx>**
DA Form 2028	R	5.2.2.3	**<da2028>**
Authentication page	R	5.2.2.4	**<authent>**
Foldout pages		5.2.2.5	**<foldsect>**
Back cover	R	5.2.2.6	**<back>**

Legend

R - Required

P - Prohibited

Shaded - As Required

Source: https://assist.dla.mil -- Downloaded: 2016-12-09T23:24Z
Check the source to verify that this is the current version before use.

This page intentionally left blank.

Source: https://assist.dla.mil -- Downloaded: 2016-12-09T23:24Z
Check the source to verify that this is the current version before use.

TABLE A-XIV. Ammunition combined maintenance requirements matrix for _____.

TM Content	Ammunition -23 -23&P	Ammunition -24 -24&P	MIL-STD-40051-2C Reference	Element Name
FRONT MATTER	**R**	**R**	5.2.1	**<paper.frnt>**
Front cover	R	R	5.2.1.1	**<frntcover>**
(MC) Promulgation letter			5.2.1.3	**<promulgation>**
Warning summary			5.2.1.4	**<warnsum>**
Change transmittal page			5.2.1.5	**<chgsheet>**
List of effective pages/work packages	R	R	5.2.1.6	**<loepwp>**
Title page	R	R	5.2.1.7	**<titleblk>**
Table of contents	R	R	5.2.1.9	**<contents>**
How to use this manual	R	R	5.2.1.10	**<howtouse>**
CHAPTER 1. GENERAL INFORMATION, EQUIPMENT DESCRIPTION, AND THEORY OF OPERATION	**R**	**R**	APPENDIX B	**<gim>**
GENERAL INFORMATION WORK PACKAGE	R	R	B.5.2	**<ginfowp>**
Scope	R	R	B.5.2.3	**<scope>**
Maintenance forms, records, and reports	R	R	B.5.2.4	**<mfrr>**
Reporting Equipment Improvement Recommendations (EIR)	R	R	B.5.2.5	**<eir>**
Hand Receipt (HR) information			B.5.2.6	**<handreceipt>**
Corrosion Prevention and Control (CPC)	R	R	B.5.2.7	**<cpcdata>**
Ozone Depleting Substances (ODS)			B.5.2.8	**<odsdata>**
Destruction of Army materiel to prevent enemy use	R	R	B.5.2.9	**<destructmat>**
Preparation for storage or shipment	R	R	B.5.2.10	**<pssref>**
Transportability guidance	R	R	B.5.2.11	**<transportability>**
Warranty information			B.5.2.12	**<wrntyref>**
Nomenclature cross-reference list			B.5.2.13	**<nomenreflist>**
List of abbreviations	R	R	B.5.2.14	**<loa>**
Quality of material			B.5.2.16	**<qual.mat.info>**
Safety, care, and handling			B.5.2.17	**<sftyinfo>**
Nuclear hardness			B.5.2.18	**<hcp>**
Calibration			B.5.2.19	**<calref>**
Item unique identification (IUID)			B.5.2.20	**<iuid>**

Source: https://assist.dla.mil -- Downloaded: 2016-12-09T23:24Z
Check the source to verify that this is the current version before use.

TABLE A-XIV. Ammunition combined maintenance requirements matrix for _____.

TM Content	Ammunition -23 -23&P	Ammunition -24 -24&P	MIL-STD-40051-2C Reference	Element Name
Supporting information for repair parts, special tools, TMDE, and support equipment			B.5.2.27	**<supdata>**
Copyright credit line			B.5.2.28	**<copyrt>**
EQUIPMENT DESCRIPTION AND DATA WORK PACKAGE	R	R	B.5.3	**<descwp>**
Equipment characteristics, capabilities, and features	R	R	B.5.3.3	**<eqpinfo>**
Location and description of major components	R	R	B.5.3.4	**<locdesc>**
Equipment differences	R	R	B.5.3.5	**<eqpdiff>**
Equipment data	R	R	B.5.3.6	**<eqpdata>**
THEORY OF OPERATION WORK PACKAGE			B.5.4	**<thrywp>**
CHAPTER X. MAINTENANCE INSTRUCTIONS	**R**	**R**	APPENDIX E E.5.2.3	**<mim> <maintenancecategory>**
SERVICE UPON RECEIPT WORK PACKAGE	R	R	E.5.3.2	**<surwp>**
Service upon receipt tasks			E.5.3.2.3	**<surtsk>**
Siting			E.5.3.2.3.1	**<siting>**
Shelter requirements			E.5.3.2.3.2	**<shltr>**
Service upon receipt of materiel	R	R	E.5.3.2.3.3	**<surmat>**
Installation instructions			E.5.3.2.3.4	**<install>**
Preliminary servicing of equipment			E.5.3.2.3.5	**<preserv>**
Preliminary checks and adjustment of equipment			E.5.3.2.3.6	**<prechkadj>**
Preliminary calibration of equipment			E.5.3.2.3.7	**<precal>**
Circuit alignment			E.5.3.2.3.8	**<calign>**
Ammunition markings			E.5.3.2.3.9.1	**<mark>**
Classification of defects			E.5.3.2.3.9.2	**<ammo.defect>**
Ammunition handling			E.5.3.2.3.9.3	**<ammo.handling>**
Procedures to activate ammunition			E.5.3.2.3.9.4	**<arm>**
Additional service upon receipt task			E.5.3.2.3.10	**<other.surtsk>**
Follow-on maintenance			E.5.3.2.3.11	**<followon.maintsk>**
MAINTENANCE WORK PACKAGES	R	R	E.5.3.5	**<maintwp>**
Maintenance tasks	R	R	E.5.3.5.3	**<maintsk>**

Source: https://assist.dla.mil -- Downloaded: 2016-12-09T23:24Z
Check the source to verify that this is the current version before use.

TABLE A-XIV. Ammunition combined maintenance requirements matrix for _____.

TM Content	Ammunition -23 -23&P	Ammunition -24 -24&P	MIL-STD-40051-2C Reference	Element Name
Inspect			E.5.3.5.3.2	**<inspect>**
Test			E.5.3.5.3.3	**<test>**
Service			E.5.3.5.3.4	**<service>**
Adjust			E.5.3.5.3.5	**<adjust>**
Align			E.5.3.5.3.6	**<align>**
Calibrate			E.5.3.5.3.7	**<calibration>**
Remove			E.5.3.5.3.8	**<remove>**
Install			E.5.3.5.3.9	**<install>**
Replace			E.5.3.5.3.10	**<replace>**
Repair			E.5.3.5.3.11	**<repair>**
Paint			E.5.3.5.3.12	**<paint>**
Overhaul			E.5.3.5.3.13	**<overhaul>**
Rebuild			E.5.3.5.3.14	**<rebuild>**
Lubricate			E.5.3.5.3.15	**<lube>**
Mark			E.5.3.5.3.16	**<mark>**
Pack			E.5.3.5.3.17	**<pack>**
Unpack			E.5.3.5.3.18	**<unpack>**
Preserve			E.5.3.5.3.19	**<preservation>**
Prepare for use			E.5.3.5.3.20	**<prepforuse>**
Assemble			E.5.3.5.3.21	**<assem>**
Disassemble			E.5.3.5.3.22	**<disassem>**
Clean			E.5.3.5.3.23	**<clean>**
Nondestructive inspection			E.5.3.5.3.24	**<ndi>**
Place in service			E.5.3.5.3.26	**<pis>**
Preparation for storage	R	R	E.5.3.5.3.35	**<prepstore>**
Preparation for shipment	R	R	E.5.3.5.3.36	**<prepship>**
Transport	R	R	E.5.3.5.3.37	**<transport>**
Arm			E.5.3.5.3.38	**<arm>**
Load			E.5.3.5.3.39	**<load>**
Unload			E.5.3.5.3.40	**<unload>**
Additional maintenance task			E.5.3.5.3.46	**<other.maintsk>**
Follow-on maintenance			E.5.3.5.3.47	**<followon.maintsk>**
GENERAL MAINTENANCE WORK PACKAGE			E.5.3.7	**<gen.maintwp>**

Source: https://assist.dla.mil -- Downloaded: 2016-12-09T23:24Z
Check the source to verify that this is the current version before use.

TABLE A-XIV. Ammunition combined maintenance requirements matrix for _____.

TM Content	Ammunition -23 -23&P	Ammunition -24 -24&P	MIL-STD-40051-2C Reference	Element Name
LUBRICATION INSTRUCTIONS WORK PACKAGE			E.5.3.8	**<lubewp>**
ILLUSTRATED LIST OF MANUFACTURED ITEMS WORK PACKAGES			E.5.3.10	
Illustrated list of manufactured items introduction work package	R	R	E.5.3.10.1	**<manu_items_introwp>**
Manufacturing procedures work package	R	R	E.5.3.10.2	**<manuwp>**
TORQUE LIMITS WORK PACKAGE			E.5.3.11	**<torquewp>**
WIRING DIAGRAMS WORK PACKAGE			E.5.3.12	**<wiringwp>**
CHAPTER X. TEST AND INSPECTION MAINTENANCE INSTRUCTIONS			APPENDIX E E.5.2.8	**<mim> <testinspectioncategory>**
MAINTENANCE WORK PACKAGES			E.5.3.5	**<maintwp>**
Inspection			E.5.3.5.3.2	**<inspect>**
Test			E.5.3.5.3.3	**<test>**
CHAPTER X. SHIPMENT/MOVEMENT AND STORAGE MAINTENANCE INSTRUCTIONS	**R**	**R**	APPENDIX E E.5.2.9	**<mim> <shipmentmovementstoragecategory>**
MAINTENANCE WORK PACKAGES			E.5.3.5	**<maintwp>**
Preparation for storage			E.5.3.5.3.35	**<prepstore>**
Preparation for shipment			E.5.3.5.3.36	**<prepship>**
Transport			E.5.3.5.3.37	**<transport>**
CHAPTER X. AMMUNITION MARKING MAINTENANCE INSTRUCTIONS	**R**	**R**	APPENDIX E E.5.2.10	**<mim> <ammomarkingcategory>**
AMMUNITION MARKING INFORMATION WORK PACKAGE	R	R	E.5.3.15.2	**<ammo.markingwp>**
CHAPTER X. DESTRUCTION OF EQUIPMENT TO PREVENT ENEMY USE *NOTE* *If a separate destruction of materiel manual is not developed for this equipment, then the destruction chapter must be included.*			APPENDIX H	**<dim>**
DESTRUCTION PROCEDURES INTRODUCTION WORK PACKAGE	R	R	H.5.3	**<destruct-introwp>**

Source: https://assist.dla.mil -- Downloaded: 2016-12-09T23:24Z
Check the source to verify that this is the current version before use.

TABLE A-XIV. Ammunition combined maintenance requirements matrix for _____.

TM Content	Ammunition -23 -23&P	Ammunition -24 -24&P	MIL-STD-40051-2C Reference	Element Name
Authority to destroy	R	R	H.5.3.3	**<authorize_to_destroy>**
Reporting destruction	R	R	H.5.3.4	**<report_destruct>**
General destruction information	R	R	H.5.3.5	**<general_destruct_info>**
Degree of destruction	R	R	H.5.3.6	**<degree_of_destruct>**
Essential components and spare parts			H.5.3.7	**<component_spares>**
DESTRUCTION PROCEDURES WORK PACKAGE			H.5.4	**<destruct-materialwp>**
Parts list			H.5.4.3	**<essential_spares>**
Specific destruction procedures			H.5.4.4	**<proc>**
CHAPTER X. RPSTL ***(-23, -24)*** ***(-23&P, -24&P)***	**P R**	**P R**	APPENDIX F	**<pim>**
INTRODUCTION WORK PACKAGE	R	R	F.5.3.5	**<introwp>**
REPAIR PARTS LIST WORK PACKAGE	R	R	F.5.3.6	**<plwp>**
REPAIR PARTS FOR SPECIAL TOOLS WORK PACKAGE			F.5.3.7	**<stl_partswp>**
KIT PARTS LIST WORK PACKAGE			F.5.3.8	**<kitswp>**
BULK ITEM WORK PACKAGE			F.5.3.9	**<bulk_itemswp>**
SPECIAL TOOLS LIST WORK PACKAGE			F.5.3.10	**<stlwp>**
NSN INDEX WORK PACKAGE	R	R	F.5.3.11.1	**<nsnindxwp>**
P/N INDEX WORK PACKAGE	R	R	F.5.3.11.2	**<pnindxwp>**
REFERENCE DESIGNATOR INDEX WORK PACKAGE			F.5.3.11.3	**<refdesindxwp>**
CHAPTER X. SUPPORTING INFORMATION ***NOTE*** *Applicable supporting information work packages shall be arranged in the order in which they are presented here and numbered accordingly.*	**R**	**R**	APPENDIX G	**<sim>**
REFERENCES WORK PACKAGE	R	R	G.5.2	**<refwp>**
INTRODUCTION FOR NON-AVIATION TWO LEVEL MAC WORK PACKAGE	R	R	G.5.3.1	**<macintrowp>**

Source: https://assist.dla.mil -- Downloaded: 2016-12-09T23:24Z
Check the source to verify that this is the current version before use.

TABLE A-XIV. Ammunition combined maintenance requirements matrix for _____.

TM Content	Ammunition -23 -23&P	Ammunition -24 -24&P	MIL-STD-40051-2C Reference	Element Name
NON-AVIATION TWO-LEVEL MAC WORK PACKAGE	R	R	G.5.3.3	**<macwp>**
EXPENDABLE AND DURABLE ITEMS WORK PACKAGE	R	R	G.5.7	**<explistwp>**
TOOL IDENTIFICATION LIST WORK PACKAGE	R	R	G.5.8	**<toolidwp>**
ADDITIONAL SUPPORTING WORK PACKAGES			G.5.12	**<genwp>**
REAR MATTER	**R**	**R**	5.2.2	**<rear>**
Glossary			5.2.2.1	**<glossary>**
Alphabetical index			5.2.2.2	**<aindx>**
DA Form 2028	R	R	5.2.2.3	**<da2028>**
Authentication page	R	R	5.2.2.4	**<authent>**
Foldout pages			5.2.2.5	**<foldsect>**
Back cover	R	R	5.2.2.6	**<back>**

Legend

R - Required

P - Prohibited

Shaded - As required

Source: https://assist.dla.mil -- Downloaded: 2016-12-09T23:24Z
Check the source to verify that this is the current version before use.

TABLE A-XV. Stand-alone destruction of materiel manual requirements matrix for ____.

TM Content	Destruction to Prevent Enemy Use TM	MIL-STD-40051-2C Reference	Element Name
DESTRUCTION TO PREVENT ENEMY USE TM *NOTE* *If a separate destruction of materiel manual is not developed, then the destruction chapter in the basic TM must be included.*		APPENDIX H	**<destruction_manual>**
FRONT MATTER	**R**	5.2.1	**<paper.frnt>**
Front cover	R	5.2.1.1	**<frntcover>**
(MC) Promulgation letter		5.2.1.3	**<promulgation>**
Warning summary		5.2.1.4	**<warnsum>**
Change transmittal page		5.2.1.5	**<chgsheet>**
List of effective pages/work packages	R	5.2.1.6	**<loepwp>**
Title page	R	5.2.1.7	**<titleblk>**
Table of contents	R	5.2.1.9	**<contents>**
CHAPTER 1. GENERAL INFORMATION	**R**		
GENERAL INFORMATION WORK PACKAGE	R	H.5.2	**<ginfowp>**
DESTRUCTION PROCEDURES INTRODUCTION WORK PACKAGE	R	H.5.3	**<destruct-introwp>**
Authority to destroy	R	H.5.3.3	**<authorize_to_destroy>**
Reporting destruction	R	H.5.3.4	**<report_destruct>**
General destruction information	R	H.5.3.5	**<general_destruct_info>**
Degree of destruction	R	H.5.3.6	**<degree_of_destruct>**
Essential components and spare parts		H.5.3.7	**<component_spares>**
CHAPTER X. DESTRUCTION OF EQUIPMENT TO PREVENT ENEMY USE	**R**	H.5.4	
DESTRUCTION PROCEDURES WORK PACKAGE	R	H.5.4	**<destruct-materialwp>**
Parts list		H.5.4.3	**<essential_spares>**
Specific destruction procedures	R	H.5.4.4	**< proc>**
REAR MATTER	**R**	5.2.2	**<rear>**
Glossary		5.2.2.1	**<glossary>**
Alphabetical Index	R	5.2.2.2	**<aindx>**
DA Form 2028	R	5.2.2.3	**<da2028>**
Authentication page	R	5.2.2.4	**<authent>**

Source: https://assist.dla.mil -- Downloaded: 2016-12-09T23:24Z
Check the source to verify that this is the current version before use.

TABLE A-XV. Stand-alone destruction of materiel manual requirements matrix for ___.

TM Content	Destruction to Prevent Enemy Use TM	MIL-STD-40051-2C Reference	Element Name
Foldout pages		5.2.2.5	**<foldsect>**
Back cover	R	5.2.2.6	**<back>**

Legend

R - Required

P - Prohibited

Shaded - As Required

Source: https://assist.dla.mil -- Downloaded: 2016-12-09T23:24Z
Check the source to verify that this is the current version before use.

TABLE A-XVI. BDAR requirements matrix for _____.

TM Content	BDAR TM	MIL-STD-40051-2C Reference	Element Name
BATTLE DAMAGE ASSESSMENT AND REPAIR		APPENDIX I	**<bdar>**
FRONT MATTER	**R**	5.2.1	**<paper.frnt>**
Front cover	R	5.2.1.1	**<frntcover>**
(MC) Promulgation letter		5.2.1.3	**<promulgation>**
Warning summary		5.2.1.4	**<warnsum>**
Change transmittal page		5.2.1.5	**<chgsheet>**
List of effective pages/work packages	R	5.2.1.6	**<loepwp>**
Title page	R	5.2.1.7	**<titleblk>**
Table of contents		5.2.1.9	**<contents>**
How to use this manual		5.2.1.10	**<howtouse>**
CHAPTER 1. GENERAL INFORMATION	**R**	I.5.3	**<gim>**
GENERAL INFORMATION WORK PACKAGE	R	I.5.3.1	**<ginfowp>**
BDAR GENERAL INFORMATION WORK PACKAGE	R	I.5.3.2	**<bdar-geninfowp>**
Standards and practices	R	I.5.3.2.4	**<bdar-std-practices>**
Tasks and responsibilities	R	I.5.3.2.5	**<bdar-task-resp>**
Combat threats (aviation only)		I.5.3.2.6	**<bdar-combat-threat>**
CHAPTER 2. ASSESSING BATTLE DAMAGE	**R**	I.5.4	**<baim>**
BATTLE DAMAGE ASSESSMENT WORK PACKAGE	R	I.5.4.1	**<damage-assesswp>**
Introduction	R	I.5.4.1.4	**<intro>**
General fault assessment tables	R	I.5.4.1.5	
CHAPTER X. GENERAL REPAIR	**R**	I.5.5	**<brim>**
GENERAL REPAIR WORK PACKAGE	R	I.5.5.1	**<genrepairwp>**
Introduction	R	I.5.5.1.4	**<geninfo>**
Repair procedure	R	I.5.5.1.5	**<bdar-repair-proc>**
CHAPTER X. SUPPORTING INFORMATION	**R**	APPENDIX G I.5.6	**<sim>**
REFERENCES WORK PACKAGE	R	I.5.6.1	**<refwp>**
SPECIAL OR FABRICATED TOOLS WORK PACKAGE		I.5.6.2	**<bdartoolswp>**
EXPENDABLE AND DURABLE ITEMS WORK PACKAGE	R	I.5.6.3	**<explistwp>**
SUBSTITUTE MATERIALS/PARTS WORK PACKAGE	R	I.5.6.4	**<substitute-matwp>**

Source: https://assist.dla.mil -- Downloaded: 2016-12-09T23:24Z
Check the source to verify that this is the current version before use.

TABLE A-XVI. BDAR requirements matrix for _____.

TM Content	BDAR TM	MIL-STD-40051-2C Reference	Element Name
REAR MATTER	**R**	5.2.2	**<rear>**
Glossary		5.2.2.1	**<glossary>**
Alphabetical Index	R	5.2.2.2	**<aindx>**
DA Form 2028	R	5.2.2.3	**<da2028>**
Authentication page	R	5.2.2.4	**<authent>**
Foldout pages		5.2.2.5	**<foldsect>**
Back cover	R	5.2.2.6	**<back>**

Legend

R - Required

P - Prohibited

Shaded - As Required

Source: https://assist.dla.mil -- Downloaded: 2016-12-09T23:24Z
Check the source to verify that this is the current version before use.

TABLE A-XVII. Preventive maintenance checklists requirements matrix for _____.

TM Content	-10	-13	-14	-23	-24	-40	MIL-STD-40051-2C Reference	Element Name
PREVENTIVE MAINTENANCE CHCKLIST							APPENDIX J	**<pmc>**
FRONT MATTER	R	R	R	R	R	R	5.2.1.2	**<frntcover_abbreviated>**
TM Title	R	R	R	R	R	R	5.2.1.1.4	**<tmtitle>**
Reporting of errors	R	R	R	R	R	R	J.5.2	**<reporting>**
Notices	R	R	R	R	R	R	5.2.1.1.7 5.2.1.1.8 5.2.1.1.9 5.2.1.1.10 5.2.1.1.11 5.2.1.1.12 J.5.2.1.1	**<notices>**
Service Nomenclature	R	R	R	R	R	R	5.2.1.1.13	**<servnomen>**
Date	R	R	R	R	R	R	5.2.1.1.14	**<date>**
Warning Summary							J.5.2.2	**<warnsum>**
PMCS INTRODUCTION WORK PACKAGE	R	R	R	R	R	R	J.5.3 E.5.3.4.1	**<pmcsintrowp>**
PMCS WORK PACKAGE	R	R	R	R	R	R	J.5.4 E.5.3.4.2	**<pmcswp>**
REAR MATTER	**R**	**R**	**R**	**R**	**R**	**R**	J.5.5 5.2.2	**<rear>**

Legend

R - Required

P - Prohibited

Shaded - As Required

Source: https://assist.dla.mil -- Downloaded: 2016-12-09T23:24Z
Check the source to verify that this is the current version before use.

This page intentionally left blank.

Source: https://assist.dla.mil -- Downloaded: 2016-12-09T23:24Z
Check the source to verify that this is the current version before use.

TABLE A-XVIII. Lubrication orders requirements matrix for _____.

TM Content	LO	MIL-STD-40051-2C Reference	Element Name
LUBRICATION ORDER	**R**	**APPENDIX K K.5.1**	**<lubeorder>**
FRONT MATTER	**R**		
Front cover	R	K.5.2.1	**<frntcover_abbreviated>**
Heading	R	K.5.2.1.1	
TM Title	R	K.5.2.1.2	**<tmtitle>**
NSN, P/N, CAGEC, EIC	R	K.5.2.1.3	
Reference line	R	K.5.2.1.4	**<lube-refs>**
Reporting of errors	R	K.5.2.1.5	**<reporting>**
Supersedure notice		K.5.2.1.6	**<supersedure>**
Distribution statement, export control warning, and destruction notice	R	K.5.2.1.7	**<notices>**
LO statement	R	K.5.2.1.8	**<general_purpose_notices>**
Service Nomenclature	R	K.5.2.1.9	**<servnomen>**
Date	R	K.5.2.1.10	**<date>**
INTRODUCTION WORK PACKAGE	R	K.5.3	**<lointrowp>**
LUBRICATION PROCEDURES WORK PACKAGE	R	K.5.4	**<lubewp>**
SUPPORTING INFORMATION		**K.5.5**	**<sim>**
LUBRICANTS AND MILITARY SYMBOLS WORK PACKAGE		K.5.5.1	**<lubricantsymbolswp>**
LUBRICANT TYPES WORK PACKAGE		K.5.5.2	**<lubetypeswp>**
SPECIAL NOTES WORK PACKAGE		K.5.5.3	**<lospecnoteswp>**
REAR MATTER	**R**	**K.5.6**	**<lubeorder_rear>**
DA Form 2028		**K.5.6.1**	**<da2028>**
Authentication page	R	**K.5.6.2**	**<authent>**
Back cover	R	**K.5.6.3**	**<back>**

Legend

R - Required

P - Prohibited

Shaded - As Required

Source: https://assist.dla.mil -- Downloaded: 2016-12-09T23:24Z
Check the source to verify that this is the current version before use.

This page intentionally left blank.

Source: https://assist.dla.mil -- Downloaded: 2016-12-09T23:24Z
Check the source to verify that this is the current version before use.

TABLE A-XIX. DMWR maintenance/demilitarization of ammunition requirements matrix for .

DMWR Content	DMWR Maintenance/ Demilitarization of Ammunition	MIL-STD-40051-2C Reference	Element Name
DMWR MAINTENANCE OR DEMILITARIZATION OF AMMUNITION		APPENDIX L	**<dmwr_ammo>**
FRONT MATTER	**R**	5.2.1	**<paper.frnt>**
Front cover	R	5.2.1.1	**<frntcover>**
(MC) Promulgation letter		5.2.1.3	**<promulgation>**
Warning summary		5.2.1.4	**<warnsum>**
Change transmittal page		5.2.1.5	**<chgsheet>**
List of effective pages/work packages	R	5.2.1.6	**<loepwp>**
Title page	R	5.2.1.7	**<titleblk>**
Table of contents	R	5.2.1.9	**<contents>**
CHAPTER 1. GENERAL INFORMATION AND DMWR INTRODUCTION	**R**	L.5.3	**<gim>**
GENERAL INFORMATION WORK PACKAGE	R	B.5.2	**<ginfowp>**
Scope	R	B.5.2.3	**<scope>**
Maintenance forms, records, and reports	R	B.5.2.4	**<mfrr>**
Reporting Equipment Improvement Recommendations (EIR)	R	B.5.2.5	**<eir>**
Corrosion Prevention and Control (CPC)	R	B.5.2.7	**<cpcdata>**
Item unique identification (IUID)		B.5.2.20	**<iuid>**
Deviations, waivers, and exceptions	R	B.5.2.23	**<deviation>**
DMWR INTRODUCTION WORK PACKAGE	R	L.5.3.2	**<dmwr_introwp>**
Work planning	R	L.5.3.2.3	**<work_planning>**
Disposition	R	L.5.3.2.4	**<disposition>**
Equipment	R	L.5.3.2.5	**<equipment>**
Safety requirements	R	L.5.3.2.6	**<sfty_req>**
Protection against general hazards	R	L.5.3.2.7	**<gen_hazards>**
Protection against specific hazards	R	L.5.3.2.8	**<spec_hazards>**
Hazard analysis	R	L.5.3.2.9	**<haz_analysis>**
Environmental regulation compliance	R	L.5.3.2.10	**<erc>**
Resource conservation and recovery regulations	R	L.5.3.2.11	**<rcrr>**

Source: https://assist.dla.mil -- Downloaded: 2016-12-09T23:24Z
Check the source to verify that this is the current version before use.

TABLE A-XIX. DMWR maintenance/demilitarization of ammunition requirements matrix for .

DMWR Content	DMWR Maintenance/ Demilitarization of Ammunition	MIL-STD-40051-2C Reference	Element Name
Resource recovery	R	L.5.3.2.12	**<resource_recovery>**
Reporting requirements	R	L.5.3.2.13	**<reporting_req>**
Tabulated data	R	L.5.3.2.14	**<tabdata>**
Flowchart		L.5.3.2.15	**<flowchart>**
CHAPTER X. OPERATIONAL REQUIREMENTS	**R**	L.5.4	**<opim>**
OPERATIONAL REQUIREMENTS WORK PACKAGE	**R**	L.5.4.1	**<dmwr_operationalreqwp>**
Special safety requirements	R	L.5.4.1.3	**<spec_sfty_req>**
Operational steps	R	L.5.4.1.4	**<op_steps>**
Flowchart		L.5.4.1.5	**<flowchart>**
CHAPTER X. QUALITY ACCEPTANCE REQUIREMENTS	**R**	L.5.5	**<mim>**
QUALITY ACCEPTANCE REQUIREMENTS WORK PACKAGE	R	L.5.5.1	**<dmwr_qarwp>**
Demilitarized ammunition		L.5.5.1.3	**<demil_qar>**
Maintenance of ammunition		L.5.5.1.4	**<maintenance_qar>**
Definitions	R	L.5.5.1.5	**<definitions>**
CHAPTER X. SUPPORTING INFORMATION ***NOTE*** *Applicable supporting information work packages shall be arranged in the order in which they are presented here and numbered accordingly.*	**R**	L.5.6	**<dmwr_sim>**
REFERENCES WORK PACKAGE	R	L.5.6.1	**<refwp>**
EXPENDABLE AND DURABLE ITEMS LIST WORK PACKAGE	R	L.5.6.2	**<explistwp>**
EQUIPMENT AND SPECIAL FACILITIES WORK PACKAGE	R	L.5.6.3	**<facilwp>**
TABULATED DATA, MILITARY SPECIFICATIONS, AND DRAWINGS WORK PACKAGE	R	L.5.6.4	**<genwp>**
APPROVED INTRAPLANT TRANSFER EQUIPMENT WORK PACKAGE		L.5.6.5	**<genwp>**
PENTACHLOROPHENOL (PENTA)-TREATED MATERIALS WORK PACKAGE		L.5.6.6	**<genwp>**
ENVIRONMENTAL REQUIREMENTS WORK PACKAGE	R	L.5.6.7	**<genwp>**

Source: https://assist.dla.mil -- Downloaded: 2016-12-09T23:24Z
Check the source to verify that this is the current version before use.

TABLE A-XIX. DMWR maintenance/demilitarization of ammunition requirements matrix for .

DMWR Content	DMWR Maintenance/ Demilitarization of Ammunition	MIL-STD-40051-2C Reference	Element Name
HAZARD ANALYSIS WORK PACKAGE	R	L.5.6.8	**<genwp>**
OTHER SUPPORTING INFORMATION WORK PACKAGE		L.5.6.9	**<genwp>**
REAR MATTER	**R**	5.2.2	**<rear>**
Glossary		5.2.2.1	**<glossary>**
Alphabetical index		5.2.2.2	**<aindx>**
DA Form 2028	R	5.2.2.3	**<da2028>**
Authentication page	R	5.2.2.4	**<authent>**
Foldout pages		5.2.2.5	**<foldsect>**
Back cover	R	5.2.2.6	**<back>**

Legend

R - Required

P - Prohibited

Shaded - As Required

Source: https://assist.dla.mil -- Downloaded: 2016-12-09T23:24Z
Check the source to verify that this is the current version before use.

This page intentionally left blank.

Source: https://assist.dla.mil -- Downloaded: 2016-12-09T23:24Z
Check the source to verify that this is the current version before use.

TABLE A-XX. Software Manual for_____

TM Content	SUM	SAM	SUM & SAM	MIL-STD-40051-2C Reference	Element Name
FRONT MATTER	**R**	**R**	**R**	5.2.1	**<paper.frnt>**
Front cover	R	R	R	5.2.1.1	**<frntcover>**
(MC) Promulgation letter				5.2.1.3	**<promulgation>**
Warning summary				5.2.1.4	**<warnsum>**
Change transmittal page				5.2.1.5	**<chgsheet>**
List of effective pages/work packages	R	R	R	5.2.1.6	**<loepwp>**
Title page	R	R	R	5.2.1.7	**<titleblk>**
Table of contents	R	R	R	5.2.1.9	**<contents>**
How to use this manual	R	R	R	5.2.1.10	**<howtouse>**
CHAPTER 1. GENERAL INFORMATION, SOFTWARE SUMMARY	**R**	**R**	**R**	APPENDIX B M.5.3	**<gim>**
GENERAL INFORMATION WORK PACKAGE	R	R	R	M.5.3.1	**<softginfowp>**
Scope	R	R	R	M.5.3.1.3 B.5.2.3	**<scope>**
Maintenance forms, records, and reports	R	R	R	M.5.3.1.4 B.5.2.4	**<mfrr>**
Software improvement Recommendations (EIR)	R	R	R	M.5.3.1.5 B.5.2.5	**<eir>**
System overview	R	R	R	M.5.3.1.6	**<softsysover>**
Document overview	R	R	R	M.5.3.1.7	**<softdocover>**
Warranty information				M.5.3.1.8	**<wrntyref>**
Destruction of Army software to prevent enemy use				M.5.3.1.9 B.5.2.9	**<destructmat>**
Nomenclature cross-reference list				M.5.3.1.10 B.5.2.13	**<nomenreflist>**
List of abbreviations/acronyms	R	R	R	M.5.3.1.10 B.5.2.14	**<loa>**
SOFTWARE SUMMARY WORK PACKAGE	R	R	R	M.5.3.2	**<softsumwp>**
Software application	R	R	R	M.5.3.2.3	**<soft_app>**
Software inventory	R	R	R	M.5.3.2.4	**<soft_inventory>**
Software environment	R	R	R	M.5.3.2.5	**<soft_environment>**
Security and privacy	R	R	R	M.5.3.2.6	**<soft_secpriv>**

Source: https://assist.dla.mil -- Downloaded: 2016-12-09T23:24Z
Check the source to verify that this is the current version before use.

TABLE A-XX. Software Manual for_____

TM Content	SUM	SAM	SUM & SAM	MIL-STD-40051-2C Reference	Element Name
Supervisory controls				M.5.3.2.7	**<soft_superctrls>**
Assistance and problem reporting	R	R	R	M.5.3.2.8	**<soft_assistreport>**
SOFTWARE EFFECTIVITY WORK PACKAGE				M.5.3.3	**<softeffectwp>**
DIFFERENCES BETWEEN SOFTWARE VERSIONS WORK PACKAGE				M.5.3.4	**<softdiffversionwp>**
CHAPTER 2 SOFTWARE DESCRIPTION/DATA	**R**	**R**	**R**	M.5.4	**<softdescdata>**
FEATURES AND CAPABILITIES WORK PACKAGE	R	R	R	M.5.4.1	**<softfeaturescapwp>**
SCREEN DISPLAYS WORK PACKAGE	R	R	R	M.5.4.2	**<softscreendisplaywp>**
MENUS/DIRECTORY STRUCTURE WORK PACKAGE	R	R	R	M.5.4.3	**<softmenuwp>**
TOOLS AND BUTTONS WORK PACKAGE	R	R	R	M.5.4.4	**<softtoolswp>**
CHAPTER X. SOFTWARE OPERATING INSTRUCTIONS	**R**	**R**	**R**	M.5.5	**<sopim>**
SECURITY AND PRIVACY PROCEDURES WORK PACKAGE	R	R	R	M.5.5.1	**<softsecprivwp>**
SUPERVISORY CONTROLS WORK PACKAGE		R	R	M.5.5.2	**<softsuperctrlswp>**
POWERUP/STARTUP AND POWERDOWN/SHUTDOWN PROCEDURES WORK PACKAGE	R	R	R	M.5.5.3	**<softpowerupwp>**
ACCESSING/EXITING SOFTWARE WORK PACKAGE	R	R	R	M.5.5.4	**<softaccesswp>**

Source: https://assist.dla.mil -- Downloaded: 2016-12-09T23:24Z
Check the source to verify that this is the current version before use.

TABLE A-XX. Software Manual for_____

TM Content	SUM	SAM	SUM & SAM	MIL-STD-40051-2C Reference	Element Name
KEY COMMANDS WORK PACKAGE				M.5.5.5	**<softkeycmdswp>**
PROCESSES AND COMMANDS WORK PACKAGE				M.5.5.6	**<softproccmdwp>**
USER INTERFACE WORK PACKAGE				M.5.5.7	**<softguiwp>**
SOFTWARE OPERATING CONVENTIONS WORK PACKAGE				M.5.5.8	**<softopconventionswp>**
ADDITIONAL SOFTWARE OPERATION WORK PACKAGE				M.5.5.9	**<softgenwp>**
CHAPTER X. SOFTWARE TROUBLESHOOTING PROCEDURES	**R**	**R**	**R**	M.5.6	**<tim> <troublecategory>**
INTRODUCTION WORK PACKAGE	R	R	R	M.5.6.1 D.5.5.3	**<tsintrowp>**
TROUBLESHOOTING INDEX WORK PACKAGE		R	R	M.5.6.2 D.5.5.5	**<tsindexwp>**
MESSAGES WORK PACKAGE		R	R	M.5.6.3	**<softmessageswp>**
RECOVERY FROM ERRORS, MALFUNCTIONS, AND EMERGENCIES				M.5.6.4	**<softerrorswp>**
TROUBLESHOOTING WORK PACKAGE				M.5.6.5 D.5.5.8.4	**<tswp>**
CHAPTER X. SOFTWARE MAINTENANCE INSTRUCTIONS.		**R**	**R**	M.5.7	**<mim> <softmaintcategory>**
MAINTENANCE WORK PACKAGES		R	R	E.5.3.5	**<maintwp>**
Maintenance tasks		R	R	E.5.3.5.3	**<maintsk>**
Test				E.5.3.5.3.3	**<test>**
Remove software				E.5.3.5.3.8	**<remove>**
Install software				E.5.3.5.3.9	**<install>**
Repair software				E.5.3.5.3.11	**<repair>**
Install peripheral device				E.5.3.5.3.41	**<installperdev>**
Uninstall peripheral device				E.5.3.5.3.42	**<uninstallperdev>**

Source: https://assist.dla.mil -- Downloaded: 2016-12-09T23:24Z
Check the source to verify that this is the current version before use.

TABLE A-XX. Software Manual for_____

TM Content	SUM	SAM	SUM & SAM	MIL-STD-40051-2C Reference	Element Name
Upgrade/patch software				E.5.3.5.3.43	**<upgrade>**
Configure software				E.5.3.5.3.44	**<configsoft>**
Debug software				E.5.3.5.3.45	**<debugsoft>**
Additional maintenance task				E.5.3.5.3.46	**<other.maintsk>**
CHAPTER X. SUPPORTING INFORMATION ***NOTE*** *Applicable supporting information work packages shall be arranged in the order in which they are presented here and numbered accordingly.*	**R**	**R**	**R**	APPENDIX G	**<sim>**
REFERENCES WORK PACKAGE	R	R	R	M.5.8.1 G.5.2	**<refwp>**
BASIC ISSUE ITEMS WORK PACKAGE	R	R	R	M.5.8.2	**<softbiiwp>**
ADDITIONAL AUTHORIZATION LIST WORK PACKAGE				M.5.8.3 G.5.5	**<aalwp>**
EXPENDABLE AND DURABLE ITEMS LIST				M.5.8.4 G.5.7	**<explistwp>**
ADDITIONAL SUPPORTING WORK PACKAGES				M.5.8.5 G.5.12	**<genwp>**
REAR MATTER	**R**	**R**	**R**	5.2.2	**<rear>**
Glossary				5.2.2.1	**<glossary>**
Alphabetical index				5.2.2.2	**<aindx>**
DA Form 2028	R	R	R	5.2.2.3	**<da2028>**
Authentication page	R	R	R	5.2.2.4	**<authent>**
Foldout pages				5.2.2.5	**<foldsect>**
Back cover	R	R	R	5.2.2.6	**<back>**

Legend

R - Required

P - Prohibited

Shaded - As Required

Source: https://assist.dla.mil -- Downloaded: 2016-12-09T23:24Z
Check the source to verify that this is the current version before use.

TABLE A-XXI. General maintenance manual for_____

TM Content	General Maint Manual	MIL-STD-40051-2C Reference	Element Name
FRONT MATTER	**R**	5.2.1	**<paper.frnt>**
Front cover	R	5.2.1.1	**<frntcover>**
(MC) Promulgation letter		5.2.1.3	**<promulgation>**
Warning summary		5.2.1.4	**<warnsum>**
Change transmittal page		5.2.1.5	**<chgsheet>**
List of effective pages/work packages	R	5.2.1.6	**<loepwp>**
Title page	R	5.2.1.7	**<titleblk>**
Table of contents	R	5.2.1.9	**<contents>**
How to use this manual	R	5.2.1.10	**<howtouse>**
CHAPTER 1. GENERAL INFORMATION	**R**	APPENDIX B	**<gim>**
GENERAL INFORMATION WORK PACKAGE	R	N.5.3.1	**<gmginfowp>**
Scope	R	B.5.2.3	**<scope>**
Maintenance forms, records, and reports	R	B.5.2.4	**<mfrr>**
Equipment improvement Recommendations (EIR)	R	B.5.2.5	**<eir>**
Policy		N.5.3.1.6	**<policy>**
Safety		N.5.3.1.7	**<safety>**
Warranty information		N.5.3.1.8	**<wrntyref>**
Nomenclature cross-reference list		B.5.2.13	**<nomenreflist>**
List of abbreviations/acronyms	R	B.5.2.14	**<loa>**
EQUIPMENT DESCRIPTION AND DATA WORK PACKAGE	R	N.5.3.2	**<descwp>**
CHAPTER X. MAINTENANCE PROCEDURES	**R**	APPENDIX E E.5.2.3	**<mim>** **<maintenance category>**
MAINTENANCE WORK PACKAGES		E.5.3.5	**<maintwp>**
Maintenance tasks		E.5.3.5.3	**<maintsk>**
Inspect		E.5.3.5.3.2	**<inspect>**
Test		E.5.3.5.3.3	**<test>**
Service		E.5.3.5.3.4	**<service>**
Adjust		E.5.3.5.3.5	**<adjust>**

Source: https://assist.dla.mil -- Downloaded: 2016-12-09T23:24Z
Check the source to verify that this is the current version before use.

TABLE A-XXI. General maintenance manual for_____

TM Content	General Maint Manual	MIL-STD-40051-2C Reference	Element Name
Align		E.5.3.5.3.6	**<align>**
Calibrate		E.5.3.5.3.7	**<calibration>**
Remove		E.5.3.5.3.8	**<remove>**
Install		E.5.3.5.3.9	**<install>**
Replace		E.5.3.5.3.10	**<replace>**
Repair		E.5.3.5.3.11	**<repair>**
Paint		E.5.3.5.3.12	**<paint>**
Lubricate		E.5.3.5.3.15	**<lube>**
Mark		E.5.3.5.3.16	**<mark>**
Pack		E.5.3.5.3.17	**<pack>**
Unpack		E.5.3.5.3.18	**<unpack>**
Preserve		E.5.3.5.3.19	**<preservation>**
Prepare for use		E.5.3.5.3.20	**<prepforuse>**
Assemble		E.5.3.5.3.21	**<assem>**
Disassemble		E.5.3.5.3.22	**<disassem>**
Clean		E.5.3.5.3.23	**<clean>**
Nondestructive inspection		E.5.3.5.3.24	**<ndi>**
Place in service		E.5.3.5.3.26	**<pis>**
Arm		E.5.3.5.3.38	**<arm>**
Load		E.5.3.5.3.39	**<load>**
Unload		E.5.3.5.3.40	**<unload>**
Additional maintenance task		E.5.3.5.3.46	**<other.maintsk>**
Follow-on maintenance		E.5.3.2.3.47	**<followon.maintsk>**
GENERAL MAINTENANCE WORK PACKAGE		E.5.3.7	**<gen.maintwp>**
CHAPTER X. SUPPORTING INFORMATION ***NOTE*** *Applicable supporting information work packages shall be arranged in the order in which they are presented here and numbered accordingly.*	**R**	APPENDIX G	**<sim>**
REFERENCES WORK PACKAGE	R	G.5.2	**<refwp>**
EXPENDABLE AND DURABLE ITEMS LIST WORK PACKAGE		G.5.7	**<explistwp>**
ADDITIONAL SUPPORTING WORK PACKAGES		G.5.12	**<genwp>**

Source: https://assist.dla.mil -- Downloaded: 2016-12-09T23:24Z
Check the source to verify that this is the current version before use.

TABLE A-XXI. General maintenance manual for_____

TM Content	General Maint Manual	MIL-STD-40051-2C Reference	Element Name
REAR MATTER	**R**	5.2.2	**<rear>**
Glossary		5.2.2.1	**<glossary>**
Alphabetical index		5.2.2.2	**<aindx>**
DA Form 2028	R	5.2.2.3	**<da2028>**
Authentication page	R	5.2.2.4	**<authent>**
Foldout pages		5.2.2.5	**<foldsect>**
Back cover	R	5.2.2.6	**<back>**

Legend

R - Required

P - Prohibited

Shaded - As Required

Source: https://assist.dla.mil -- Downloaded: 2016-12-09T23:24Z
Check the source to verify that this is the current version before use.

This page intentionally left blank.

Source: https://assist.dla.mil -- Downloaded: 2016-12-09T23:24Z
Check the source to verify that this is the current version before use.

APPENDIX B
GENERAL INFORMATION, EQUIPMENT DESCRIPTION, AND THEORY OF OPERATION

B.1 **SCOPE.**

B.1.1 Scope. This appendix establishes the technical content requirements for the preparation of general information, equipment description, and theory of operation data for major weapon systems and their related systems, subsystems, equipment, assemblies, components, SRUs, and LRUs. This appendix is a mandatory part of this standard. The information contained herein is intended for compliance. The requirements are applicable for all maintenance levels/classes through overhaul (depot) including DMWRs and NMWRs.

B.2 **APPLICABLE DOCUMENTS.**

The applicable documents in Section 2 apply to this appendix.

B.3 **DEFINITIONS.**

The definitions in Section 3 apply to this appendix.

B.4 **GENERAL REQUIREMENTS.**

B.4.1 General. Descriptive information with theory of operation shall be prepared for weapon systems, major equipment, components, and applicable support and interface equipment. Information that is required to provide the user with a physical description and to functionally explain how the weapon system or equipment operates shall be included.

B.4.2 Maintenance level/class applicability. Requirements contained in this appendix are applicable to all maintenance levels/classes unless specifically labeled in bold and in parentheses. The labeled requirement may specify a specific level (e.g., **Field**) or a specific maintenance class (refer to 3.89) (e.g., **Maintainer** or **AMC**). The labeled requirement shall be applicable to all TMs containing that maintenance level/class. An explanation of applicable Department of the Army (DA) maintenance levels/classes is provided in Section 3.

B.4.3 Preparation of digital data for electronic delivery. Data prepared and delivered digitally in accordance with this standard shall be XML tagged using the current Army DTD. Data shall be formatted for presentation using the Army style sheets. Refer to 4.6 for information on obtaining or accessing the Army DTD and style sheets. XML tags used in the DTD are noted throughout the text of this standard in bracketed, bold characters (e.g., **<descwp>**) as a convenience for the author and to ensure that the tags are used correctly when developing a document instance.

B.4.4 Use of the Document Type Definition (DTD)/style sheet. The DTD referenced in this appendix interprets the technical content and structure for the functional requirements contained in this standard. Development of the page-based TMs shall be accomplished through the use of this standard, the Army DTD, and the Army style sheets. MIL-HDBK-1222 provides further guidance and preferred style and format. The guidance in MIL-HDBK-1222 shall be followed unless it conflicts with the requirements in this standard.

Source: https://assist.dla.mil -- Downloaded: 2016-12-09T23:24Z
Check the source to verify that this is the current version before use.

B.4.5 Content structure. The examples provided herein are an accurate representation of the content structure requirements contained in this appendix and shall be followed to permit the effective use of the DTD for General Information, Equipment Description, and Theory of Operation.

B.4.6 Style and format. This standard provides style and format requirements for the technical content requirements described in this appendix. These requirements are considered mandatory and are intended for compliance.

B.4.7 Work package development. Data developed in accordance with this appendix shall be divided into work packages. These work packages should be stand alone and are broken into the following work package types: general information, equipment description and data, and theory of operation. A work package shall contain all information and references required to support the work package type.

B.4.8 Safety devices and interlocks. Information shall be prepared pertaining to the purpose and location of all safety devices and interlocks in conjunction with the pertinent procedures.

B.4.9 Electrostatic Discharge (ESD) sensitive parts. If the equipment contains ESD sensitive parts, components, or circuits, cautions and ESD labels shall be incorporated into the applicable tasks and procedures to ensure ESD sensitive parts are not damaged or degraded during maintenance and operation. (Refer to 4.7.20 for requirements on labeling with ESD.) Actions which could damage ESD sensitive parts, but which are not directly related to handling or operation of ESD sensitive parts, shall not be annotated with the ESD acronym, but shall be preceded by a caution statement.

B.4.10 Nuclear hardness **<hcp>**. If the weapon system/equipment has nuclear survivability requirements (e.g., overpressure and burst, thermal radiation, electromagnetic pulse, or transient radiation effects on electronics), cautions and Hardness-Critical Process (HCP) labels shall be incorporated into the applicable tasks and procedures to ensure that the hardness of the equipment is not degraded during handling or operation. Refer to 4.7.19 for requirements on labeling with HCP. Actions which could degrade hardness, but which are not directly involved in establishing nuclear hardness, shall not be annotated with the acronym, but shall be preceded by a caution statement.

B.4.11 Selective application and tailoring of content using Appendix A matrixes. This standard contains some requirements that may not be applicable to the preparation of all TMs. Selective application and tailoring of requirements contained in this standard are the responsibility of the acquiring activity and shall be accomplished using APPENDIX A . The applicability of some requirements is also designated by one of the following statements: unless specified otherwise by the acquiring activity, as specified by the acquiring activity, or when specified by the acquiring activity.

B.5 **DETAILED REQUIREMENTS.**

B.5.1 Preparation of general information, equipment description, and theory of operation. The general information, equipment description, and theory of operation chapter shall be prepared and subdivided into individual work packages to provide the user with information for general requirements, descriptive data about the weapon system or equipment, and an explanation of how the weapon system or equipment works. Weapon system and equipment description and

Source: https://assist.dla.mil -- Downloaded: 2016-12-09T23:24Z
Check the source to verify that this is the current version before use.

theory of operation data shall be developed in narrative or tabular form, or by whatever method is most simple or effective for conveying the specific TM application. Descriptive information shall not contain any procedural data or warnings, cautions, or notes. When necessary for clarity or improved understanding, illustrations shall be used to support the narrative or tabular information. Refer to 4.7.9.3 for a description of work package identification information requirements. Refer to MIL-HDBK-1222 for examples of work package identification information format.

B.5.1.1 Required general information, equipment description, and theory of operation data work packages. General information, equipment description, and theory of operation data shall be developed and divided into the following types of work packages. Nomenclature used to identify the weapon system, major equipment, components, and applicable support and interface equipment shall remain consistent throughout and among all work packages.

a. General information work package **<ginfowp>** (refer to B.5.2).
b. Equipment description and data work package **<descwp>** (refer to B.5.3).
c. Theory of operation work package **<thrywp>** (refer to B.5.4).
d. General information work package (Preventive Maintenance Service Manual only) **<pms-ginfowp>** (refer to B.5.5).
e. General information work package (Phased Maintenance Checklist Manual only) **<pm-ginfowp>** (refer to B.5.6).

B.5.2 General information work package **<ginfowp>**. This work package shall contain the requirements provided in B.5.2.1 through B.5.2.28, as applicable, for the weapon system/equipment. (Refer to MIL-HDBK-1222 for examples.)

B.5.2.1 Work package identification information **<wpidinfo>**. Work package identification information is required for this work package. (Refer to 4.7.9.3.)

B.5.2.2 Work package initial setup **<initial_setup>**. Initial setup is not required for this work package.

B.5.2.3 Scope **<scope>**. A brief statement shall be prepared to tell what is covered in the TM. As applicable, the following information shall also be included:

a. Type of manual.
b. Model number(s) and equipment name(s).
c. Purpose of equipment.
d. Special inclusions in the manual, such as drill procedures or on-vehicle loading plans.

B.5.2.4 Maintenance forms, records, and reports **<mfrr>**.

a. (A) Army Only TM. The following statement shall be included:

"**MAINTENANCE FORMS, RECORDS, AND REPORTS**

Department of the Army forms and procedures used for equipment maintenance will be those prescribed by (as applicable) DA PAM 750-8, The Army Maintenance Management System (TAMMS) Users Manual; DA PAM 738-751, Functional Users Manual for the Army Maintenance Management Systems - Aviation (TAMMS-A); or AR 700-138, Army Logistics Readiness and Sustainability."

Source: https://assist.dla.mil -- Downloaded: 2016-12-09T23:24Z
Check the source to verify that this is the current version before use.

b. (MC) Marines Only TM. The following statement shall be included:

"**MAINTENANCE FORMS, RECORDS, AND REPORTS**

Maintenance forms and records used by Marine Corps personnel are prescribed by TM 4700-15/1."

c. Multi-Service TM. The following statements shall be included only for multi-service technical publications and shall use only applicable services (e.g., if the Navy does not use the publication, do not include a statement for that Service):

"**MAINTENANCE FORMS, RECORDS, AND REPORTS**

(A) Department of the Army forms and procedures used for equipment maintenance will be those prescribed by (as applicable) DA PAM 750-8, The Army Maintenance Management System (TAMMS) Users Manual; DA PAM 738-751, Functional Users Manual for the Army Maintenance Management Systems - Aviation (TAMMS-A); or AR 700-138, Army Logistics Readiness and Sustainability.

(MC) Maintenance forms and records used by Marine Corps personnel are prescribed by TM 4700-15/1.

(F) Maintenance forms and records used by Air Force personnel are prescribed in AFI 21-101 and the applicable TO 00-20 Series Technical Orders.

(N) Navy users should refer to their service directives to determine applicable maintenance forms and records to be used."

d. (A) Army ammunition. The following statement shall be added:

"Accidents involving injury to personnel or damage to materiel will be reported on DA Form 285, U.S. Army Accident Report in accordance with AR 385-40. Explosives and ammunition malfunctions will be reported in accordance with AR 75-1."

e. When applicable, add references to SB 742-1, Inspection of Supplies and Equipment Ammunition Surveillance Procedures.

B.5.2.5 Reporting equipment improvement recommendations **<eir>**. The following statement shall be included (italicized text within parentheses shall be replaced with the appropriate information):

Source: https://assist.dla.mil -- Downloaded: 2016-12-09T23:24Z
Check the source to verify that this is the current version before use.

“REPORTING EQUIPMENT IMPROVEMENT RECOMMENDATIONS (EIR)

If your (*insert equipment short item name*) needs improvement, let us know. Send us an EIR. You, the user, are the only one who can tell us what you do not like about your equipment. Let us know why you do not like the design or performance.“

(A) For aviation and missiles systems add the following:

"All AMCOM (Aviation and Missile Command) Deficiency Reports (DRs), (Warranty, EIR, and PQDRs) must be submitted through the Joint Deficiency Reporting System (JDRS) at https://jdrs.mil/.

(A) For all equipment other than missile or aviation systems add the following:

"All non-Aviation/Missile EIRs and PQDRs must be submitted through the Product Data Reporting and Evaluation Program (PDREP) Web site. The PDREP site is: https://www.pdrep.csd.disa.mil/."

(MC) The following statement shall be added for Marine Corps TMs:

“SF Form 368, Product Quality Deficiency Report can be found at http://www.logcom.marines.mil/centers/Generalstaff/Lsmc/pqdr.aspx and should be submitted as an email attachment to smblogcompqdrstracking@usmc.mil, (GAL display name SMB LOGCOM PQDRs Tracking).”

(A) Add the following at the end after the above information:

“If you do not have Internet access, you may submit your information using an SF 368 (Product Quality Deficiency Report). You can send your SF 368 using email, regular mail, or fax using the addresses/fax numbers specified in (*DA PAM 750-8, The Army Maintenance Management System (TAMMS) Users Manual* OR *DA PAM 738-751, Functional Users Manual for the Army Maintenance Management Systems - Aviation (TAMMS-A) for aviation systems*). We will send you a reply.”

B.5.2.6 Hand Receipt (HR) manuals **<handreceipt>**. If the equipment supported by the TM uses resources that require a hand receipt and a hand receipt manual has been prepared, the following statement shall be included in the maintainer maintenance or AMC manual’s and below general information work package.

“**HAND RECEIPT (HR) MANUALS**

This manual has a companion document with a TM number followed by “-HR” (which stands for Hand Receipt). TM X-XXXX-XXX-10-HR consists of preprinted hand receipts that list end item related equipment (e.g., Components of End Item (COEI), Basic Issue Items (BIIs), and Additional Authorization List (AAL)) that must be accounted for. As an aid to property accountability, additional HR manuals may be requisitioned through normal publication channels.”

Source: https://assist.dla.mil -- Downloaded: 2016-12-09T23:24Z
Check the source to verify that this is the current version before use.

B.5.2.7 Corrosion prevention and control **<cpcdata>**.

B.5.2.7.1 CPC Structure. CPC information shall be included in the general information work package. Refer to AR 750-59 for further information on CPC. CPC information shall consist of the following:

a. CPC boiler plate statement. (Refer to B.5.2.7.2.)

b. SF 368 boiler plate statement. (Refer to B.5.2.7.3.)

c. References to relevant maintenance tasks, work packages, or DA publications. (Refer to B.5.2.7.4.)

B.5.2.7.2 CPC boiler plate statement. A statement similar to the following shall be prepared:

"CORROSION PREVENTION AND CONTROL (CPC)

Corrosion prevention and control of Army materiel is a continuing concern. It is important that any corrosion problems with this item be reported so that the problem can be corrected and improvements can be made to prevent the problem in future items. The term “corrosion” means the deterioration of a material or its properties due to a reaction of that material with its chemical environment. An example is the rusting of iron. Corrosion damage in metals can be seen, depending on the metal, as tarnishing, pitting, fogging, surface residue, and/or cracking. Plastics, composites, and rubbers can also degrade (also considered to be corrosion based on the above definition of corrosion). Degradation is caused by thermal (heat), oxidation (oxygen), solvation (solvents), or photolytic (light, typically ultraviolet) processes. The most common exposures are excessive heat or light. Damage from these processes will appear as cracking, softening, swelling, and/or breaking. The US Army has defined the following nine (9) forms of corrosion used to evaluate the deterioration of metals. These shall be used when evaluating and documenting corrosion.

UNIFORM (or general attack): Affects a large area of exposed metal surface, like rust on steel or tarnish on silver. It gradually reduces the thickness of the metal until it fails.

CREVICE: Occurs in crevices created by rubber seals, gaskets, bolt heads, lap joints, dirt or other surface deposits. It will develop anywhere moisture or other corrosive agents are trapped and unable to drain or evaporate.

SELECTIVE LEACHING: One element, usually the anodic element of an alloy, corrodes away, leaving the cathodic element. This can create holes in metal.

INTERGRANULAR: Metal deterioration caused by corrosion on the bonds between or across the grain boundaries of the metal. The metal will appear to be peeling off in sheets, flaking, or being pushed apart by layers. A particular type of intergranular corrosion is exfoliation.

PITTING: This can result from conditions similar to those for crevice corrosion. Pits can develop on various materials due to their composition. Rifle boxes are big victims of pitting.

Source: https://assist.dla.mil -- Downloaded: 2016-12-09T23:24Z
Check the source to verify that this is the current version before use.

EROSION: Results when a moving fluid (liquid or gas) flows across a metal surface, particularly when solid particles are present in the fluid. Corrosion actually occurs on the surface of the metal, but the moving fluid washes away the corrosion and exposes a new metal surface, which also corrodes.

FRETTING: Occurs as a result of small, repetitive movements (e.g., vibration) between two surfaces in contact with each other. It's usually identified by a black powder corrosion product or pits on the surface.

GALVANIC: Occurs when two different types of metal come in contact with each other, like steel bolts on aluminum, for example. This is a common problem on aircraft because of their mix of metals.

STRESS: Term used to describe corrosion cracking and corrosion fatigue.

Where an item is not ready/available due to one of these forms of corrosion, it shall be recorded as a corrosion failure in the inspection record and the appropriate code (170) for corrosion shall be used when requesting/performing maintenance."

B.5.2.7.3 SF Form 368 boiler plate information. One of the following statements shall be included verbatim in the CPC information after the CPC boiler plate information:

a. For non-aviation systems:

" If a corrosion problem is identified, it can be reported as an EIR or PQDR. Use of key words such as "corrosion," "rust," "deterioration," or "cracking" will ensure that the information is identified as a CPC problem. SF Form 368, Product Quality Deficiency Report should be submitted to the address specified in DA PAM 750-8, The Army Maintenance Management System (TAMMS) Users Manual. "

b. For aviation systems:

" If a corrosion problem is identified, it can be reported as an EIR or PQDR. Use of key words such as "corrosion," "rust," "deterioration," or "cracking" will ensure that the information is identified as a CPC problem. SF Form 368, Product Quality Deficiency Report should be submitted to the address specified in DA PAM 738-751, Functional Users Manual for The Army Maintenance Management System-Aviation (TAMMS-A)."

B.5.2.7.4 References to relevant tasks, work packages, and DA publications. References may be included to relevant tasks, work packages and DA publications. For aviation systems reference shall be included to TM 1-1500-344-23, volumes 1-4 (Cleaning and Corrosion Control). For wheeled vehicle TMs, reference shall be included to TB 43-0213 (Corrosion Prevention and Control (CPC) for Wheeled Vehicles). If applicable, reference to TM 43-0139 (Painting Instructions for Army Materiel) shall be included.

Source: https://assist.dla.mil -- Downloaded: 2016-12-09T23:24Z
Check the source to verify that this is the current version before use.

B.5.2.8 Ozone Depleting Substances (ODSs) **<odsdata>**. The use of Class 1 ODS for new acquisitions has been curtailed by Executive Order, Public Law, and related Army policy. ODSs are listed in Title VI of the Clean Air Act. For systems procured and fielded prior to the date these became effective (June 1993) that use a Class 1 ODS, a listing of those substances required to operate and maintain the system shall be included in the manual. After June 1993, this requirement applies to any system procured or fielded that requires the use of a Class 1 ODS, where the use of the ODS has been properly documented and waived. The procuring activity will provide a list of Class 1 ODS upon request.

B.5.2.9 Destruction of Army materiel to prevent enemy use **<destructmat>**. Reference shall be made to the appropriate TM(s) or work package(s) covering the destruction of Army materiel to prevent enemy use as provided by the proponent activity.

B.5.2.10 Preparation for storage or shipment **<pssref>**. Reference shall be made to the preparation for storage work package and preparation for shipment work package found in the TM. If the relevant work packages are in another DA-authenticated publication, reference shall be made to that publication. Reference shall not be made to any Surface Deployment and Distribution Center/Transportation Engineering Agency (SDDC/TEA) (formerly Military Traffic Management Command Transportation Engineering Agency (MTMC/TEA)) publications.

B.5.2.11 Transportability guidance **<transportability>**. Reference shall be made to the transportability guidance work packages in the manual and/or to applicable U.S. Army authenticated publications containing this guidance. Reference shall not be made to any Surface Deployment and Distribution Center/Transportation Engineering Agency (SDDC/TEA) (formerly Military Traffic Management Command Transportation Engineering Agency (MTMC/TEA) publications.

B.5.2.12 Warranty information **<wrntyref>**. When the TM covers equipment that is under warranty and a Warranty Technical Bulletin (WTB) is published, the applicable WTB shall be referenced. When a WTB is not published, the following statement shall be included (italicized text within parentheses shall be replaced with the appropriate information):

> "**WARRANTY INFORMATION**
>
> The (*insert name of equipment*) is warranted for (*insert miles or other timeframe as appropriate*). The warranty starts on the date found in block 23 of DA Form 2408-9, Equipment Control Record. Report all defects to your supervisor, who will take appropriate action."

B.5.2.13 Nomenclature cross-reference list **<nomenreflist>**. A cross-reference list shall be prepared when unofficial nomenclature (common name) is approved by the proponent activity.

B.5.2.14 List of abbreviations/acronyms **<loa>**. A list of all abbreviations, acronyms, signs, or symbols used in the manual shall be prepared. Warning icons are defined in the Warning Summary. For **aircraft only**, a statement shall be prepared that abbreviations are in accordance with abbreviations contained in the Records Management and Declassification Agency (RMDA) at https://www.rmda.army.mil/abbreviation/mainmenu.asp, except when the abbreviation stands for a marking actually found in the aircraft.

Source: https://assist.dla.mil -- Downloaded: 2016-12-09T23:24Z
Check the source to verify that this is the current version before use.

B.5.2.15 Quality assurance **(QA) (DMWR/NMWR and aviation only) <qainfo>**. When specified by the acquiring activity, reference shall be made to pertinent QA information or include the appropriate general QA information. If QA information is not referenced but is included in the manual, it shall be stated that the text of each quality assurance procedure or step in the manual is preceded (and highlighted) by the addition of "QA check." For **aircraft maintenance TMs,** include a reference to TC 3-04.7 (Army Aviation Maintenance). The abbreviation "QA" shall be defined either in a note or in the text.

B.5.2.16 Quality of material **<qual.mat.info>**. A statement(s) similar to the following shall be included (italicized text within parentheses shall be replaced with the appropriate information). Manuals requiring this information contain an "R" in the matrix:

> "Material used for replacement, repair, or modification must meet the requirements of this (*insert manual*). If quality of material requirements are not stated in this (*insert manual*), the material must meet the requirements of the drawings, standards, specifications, or approved engineering change proposals applicable to the subject equipment."

B.5.2.17 Safety, care, and handling **<sftyinfo>**. The following general precautions and safety regulations shall be prepared.

a. (**Ammunition TMs**) Information shall be prepared to comply with DA PAM 385-63. References to applicable ARs for range safety and danger zones during training and combat shall be included. Explanations and official definitions shall be prepared for such safety-related terms as "misfire," "hangfire," and "cook-off," which describe characteristics associated with the specific items(s) covered by the TM under preparation. A reference to AR 385-10 and DA PAM 385-64 shall be made for general ammunition care, handling, and safety.

b. For TMs covering equipment with radioactive parts or components, information shall be prepared to comply with Nuclear Regulatory Commission provisions, and references to applicable ARs and safety TMs on radioactive materials shall be included. If additional coverage on radioactive materials is needed, but is not included in applicable TMs, instructions shall be prepared as required. In addition, the following information shall be prepared for inclusion throughout the TM.

   (1) Nuclear warning notices. These shall be placed at the beginning of any instruction covering procedures that will expose personnel to a nuclear radiation hazard.

   (2) Procedures to be followed before maintenance actions or in the event of breakage of radioactive parts or components. These include safety, care, and handling instructions.

   (3) Radioactive parts or components. These shall be shown and identified on a parts location diagram or illustration. Warning notices shall be included.

   (4) A list of radioactive parts or components and the type and quantity of radioactive material involved. These shall be included as part of equipment data (Refer to B.5.3).

   (5) Instructions for the disposal of radioactive material, such as the requirement to double bag all broken tritium sources in plastic.

Source: https://assist.dla.mil -- Downloaded: 2016-12-09T23:24Z
Check the source to verify that this is the current version before use.

c. ESD control standards for the protection of electrical and electronic parts, assemblies, and equipment shall be prepared. The ESD classes shall be identified. Refer to MIL-STD-1686 and MIL-HDBK-263, which contain ESD control procedures and material necessary to protect these items. For classifications of ESD marking procedures, refer to 4.7.20.

d. (**DMWRs/NMWRs only**) When applicable, reference shall be made to the electromagnetic compatibility standards (e.g., MIL-STD-461 and MIL-STD-462) that apply to the equipment covered in the DMWR/NMWR.

B.5.2.18 Nuclear hardness **<hcp>**. If equipment covered in the TM has nuclear survivability requirements (e.g., overpressure and burst, thermal radiation, electromagnetic pulse, or transient radiation effects on electronics), it shall be so stated. (Refer to 4.7.19 for marking HCP procedures.) The following statement shall be included.

"NUCLEAR HARDNESS

All hardness critical process (HCP) procedures in this manual are marked with the acronym HCP as follows:

1. When an entire task, including all paragraphs and procedures, is considered hardness critical, only the task title will be marked by the acronym HCP. This will be placed before the title.

2. When only certain processes and steps within the work package are hardness critical, only the applicable processes and steps will be marked by placement of the acronym HCP between each applicable step number and the text."

B.5.2.19 Calibration **<calref>**. Equipment requiring calibration shall be identified, and reference shall be made to the publication containing the applicable calibration procedure.

B.5.2.20 Item unique identification (IUID) **<iuid>**. If the equipment covered by the manual or any of its components/parts have IUID markings, a statement similar to the following shall be included:

"**ITEM UNIQUE IDENTIFICATION**

This equipment and/or its components/parts are marked with item unique identification (IUID) markings such as data plates, decals, or etchings. These markings must be scanned during performance of procedures to remove and replace the items marked or when turning in items or receiving them from supply or another unit. For information on location of the IUID marking for the end item, refer to the decal/data plate guide contained in the operator manual for the equipment."

B.5.2.21 Engineering Change Proposals (ECPs) **(DMWR/NMWR only) <ecp>**. The following statement shall be included (italicized text within parentheses shall be replaced with the appropriate information):

Source: https://assist.dla.mil -- Downloaded: 2016-12-09T23:24Z
Check the source to verify that this is the current version before use.

"**ENGINEERING CHANGE PROPOSALS**

Engineering Change Proposals (ECPs) will be submitted in accordance with AR 70-1 directly to (*enter the name and address of the responsible command or activity*). A reply will be furnished to you."

B.5.2.22 Modification list **(DMWR/NMWR only) <modification>**. Modification Work Orders (MWOs) and ECPs shall be identified for all modifications which have been incorporated into the work required by the DMWR/NMWR. MWOs shall be reported as outlined in AR 750-10. The applicable MWOs and the ECPs shall be listed (by title and number). This listing shall be supplied by the major subordinate command. Alternatively, a statement shall be made stating that the modifications must be applied during the overhaul of the item. For example (italicized text within parentheses shall be replaced with the appropriate information):

"**MODIFICATIONS**

All Modification Work Orders (MWOs), all minor alteration procedures (MAPs) specified in the contract/work directive, and all Engineering Change Proposals (ECPs) listed in the *(insert DMWR or NMWR)* must be applied during the overhaul of the item."

B.5.2.23 Deviations and exceptions **(DMWR/NMWR only) <deviation>**. The following statement shall be included (italicized text within parentheses shall be replaced with the appropriate information):

"**DEVIATIONS AND EXCEPTIONS**

Requests for deviations or exceptions to this (*insert Depot Maintenance Work Requirement (DMWR) or National Maintenance Work Requirement (NMWR)*) will be processed in accordance with International Standards Organization (ISO) 9000 Series standards, or equivalent."

B.5.2.24 Mobilization requirements **(DMWR/NMWR only) <mobreq>.** The following statement shall be included (italicized text within parentheses shall be replaced with the appropriate information):

"**MOBILIZATION REQUIREMENTS**

All requirements of this (*insert DMWR or NMWR*) will be exempted or revised in the event of mobilization. Only those procedures necessary to return the (*insert equipment name*) to a serviceable condition will be performed. The exemptions and revisions are explained in supporting information work package (*insert appropriate work package sequence number*)."

B.5.2.25 Critical safety items **(CSI) <csireq>**. As specified by the acquiring activity, the following statement shall be included:

"**CRITICAL SAFETY ITEMS (CSI) PROGRAM**

Parts, assemblies, or installations identified under the CSI program require special handling during maintenance or overhaul (M&O). Throughout the M&O procedures, warnings are included emphasizing critical instructions to be followed. These warnings are identified as CSI warnings.

A critical safety item is defined as:

Source: https://assist.dla.mil -- Downloaded: 2016-12-09T23:24Z
Check the source to verify that this is the current version before use.

A part, assembly, installation or production system with one or more critical or critical safety characteristics that, if missing or not conforming to the design data, quality requirements or overhaul and maintenance documentation, would result in an unsafe condition that could cause loss or serious damage to the end item or major components, loss of control, uncommanded engine shutdown or serious injury or death to personnel. Unsafe conditions relate to hazard severity categories I and II of MIL-STD-882 and include items determined to be "life-limited," "fracture critical," "fatigue-sensitive," etc. The determining factor in Aviation CSI is the consequence of failure, not the probability that the failure or consequence would occur.

All CSIs shall be handled and managed as prescribed in DOD 4140.01 and DA PAM 95-9.

Throughout the maintenance tasks, "CRITICAL SAFETY ITEM" alerts will precede the procedural step that includes a CSI, emphasizing that this part or parts require(s) special handling during maintenance."

B.5.2.26 Cost considerations **(DMWR/NMWR only) <cost>**. The following statement shall be included (italicized text within parentheses shall be replaced with the appropriate information):

"**COST CONSIDERATIONS**

This work requirement shall be the basis for establishing the extent of overhaul while taking into consideration cost factors. A determination shall be made on all subassemblies/assemblies to replace worn or damaged components which are available in supply, if acquisition cost is less than the cost to repair and restore to the (*insert DMWR or NMWR*) standard. The cost to repair/restore any individual item with an established Maintenance Expenditure Limit (MEL) to the (*insert DMWR or NMWR*) standard shall not exceed the MEL, unless a waiver has been approved in accordance with AR 750-1. This requirement does not apply to items exempted from MEL in accordance with AR 750-1."

B.5.2.27 Supporting information for repair parts, special tools, Test, Measurement, and Diagnostic Equipment (TMDE), and support equipment (**Maintainer/AMC and above**) **<supdata>**. When applicable, the following information shall include a reference to the common tools and equipment; special tools, TMDE, and support equipment; and the repair parts as shown in the following paragraphs. The information in B.5.2.27.1 through B.5.2.27.3 shall be included.

B.5.2.27.1 Common tools and equipment. The following statement shall be included:

"**COMMON TOOLS AND EQUIPMENT**

For authorized common tools and equipment, refer to the Modified Table of Organization and Equipment (MTOE), Common Table of Allowances (CTA) 50-970, Expendable/Durable Items (Except: Medical, Class V, Repair Parts, and Heraldic Items); CTA 50-909, Field and Garrison Furnishings and Equipment; or CTA 8-100, Army Medical Department Expendable/Durable Items; as applicable to your unit."

Source: https://assist.dla.mil -- Downloaded: 2016-12-09T23:24Z
Check the source to verify that this is the current version before use.

B.5.2.27.2 Special tools, Test, Measurement, and Diagnostic Equipment (TMDE), and support equipment. A reference to the Repair Parts and Special Tools List (RPSTL) and Maintenance Allocation Chart (MAC) shall be included. When no special tools or equipment are required, it shall be so stated. If tools are to be fabricated, reference shall be made to the Illustrated List of Manufactured Items work package (Refer to E.5.3.10).

B.5.2.27.3 Repair parts. One of the following statements shall be included (italicized text within parentheses shall be replaced with the appropriate information):

> "Repair parts are listed and illustrated in the parts information work packages beginning with (*insert TM number of RPSTL*) of this manual."
>
> OR
>
> "Repair parts are listed and illustrated in the parts information work package (*insert appropriate work package sequence number)* of this manual."

B.5.2.28 Copyright credit line **<copyrt>**. TMs should not contain copyrighted material except as specified in the Federal Acquisition Regulations and Defense Federal Acquisition Regulation Supplement. When copyrighted material is included in a TM, the TM author shall obtain prior written permission from the copyright owner or authorized agent for its use. The written permission shall contain a statement declaring whether or not a copyright credit line is required. When a copyright credit line is required, the information shall appear as the last paragraph of the general information work package.

B.5.2.28.1 Proprietary names. Trade names, copyrighted names, or other proprietary names applying exclusively to the product of one company shall not be used unless the items cannot be adequately described without using the proprietary names because of the technical involvement, construction, or composition. In such instances, one commercial product shall be listed, followed by the words "or equal." The same shall apply to manufacturers' part numbers or drawing numbers for minor parts where it is impractical to specify the exact requirements. If possible, the particular characteristics required for the "or equal" products shall be defined.

B.5.2.28.2 Advertising. Publication material shall not contain advertising matter.

B.5.3 Equipment description and data work package **<descwp>**. This work package shall contain the descriptive data requirements listed in B.5.3.1 through B.5.3.6, as applicable. If the descriptive data is provided in a separate operator manual, a paragraph referencing the equipment description and data in the operator manual shall suffice. Additional equipment description and data required for a higher maintenance level, but not included in the operator manual, shall be included. This work package shall not contain any operator or maintenance procedures.

B.5.3.1 Work package identification information **<wpidinfo>**. Work package identification information is required for this work package. (Refer to 4.7.9.3.)

B.5.3.2 Work package initial setup **<initial_setup>**. Initial setup is not required for this work package.

Source: https://assist.dla.mil -- Downloaded: 2016-12-09T23:24Z
Check the source to verify that this is the current version before use.

B.5.3.3 Equipment characteristics, capabilities, and features **<eqpinfo>**. An overall description of the equipment **<eqpdesc>** shall be prepared, including general capabilities, special features, and other like information (e.g., applications, limitations) which will be helpful in the operation and maintenance of the equipment. Unless otherwise directed, the information may be in narrative or tabular format. Additional description requirements are outlined by the following:

a. The equipment type shall be stated, as shall the following equipment features: portability or mobility, operational and special environment, and remote control.

b. Components and their functions shall not be described unless essential to continuity. For functional data, reference shall be made to the theory of operation.

c. When the equipment covered varies in scope and application or has several applications within an end item, a brief explanation of the multiple uses and a simple diagram showing all aspects of a typical application shall be prepared.

d. For **ammunition TMs**, packing and packaging information shall be prepared, including number of rounds per pack.

B.5.3.4 Location and description of major components **<locdesc>**. Equipment location information shall be prepared. It shall include external and internal views of the equipment used, to show general features and all major components. This information shall not duplicate information contained in the equipment data requirements and the equipment characteristics, capabilities, and features.

a. The equipment and weapon systems configuration shall be described as follows:

(1) A description of system areas and compartments shall be prepared. The system equipment and components contained in the areas shall be identified. To identify and locate the listed system equipment, the configuration description shall be supported by separate illustrations of each compartment and area. For aircraft only, a station diagram showing fuselage station, water line, and butt line, etc., shall be included. (Refer to FIGURE B-1)

(2) The subsystems or equipment comprising the system shall be identified and described. Other equipment which is installed in the subject system compartments and areas does not need to be listed in the text or called out in the illustrations if it does not directly affect the operation or maintenance of the subject system. Descriptions of operator-attended equipment shall include general statements about the nature and purpose of the controls and indicators. The text shall be supported by illustrations.

(3) Descriptions and illustrations of associated systems' equipment shall be limited to the major units of that equipment. The descriptions shall be more concise than those of the subject system's equipment; otherwise, the same requirements shall apply. In the descriptions, emphasis shall be placed on the associated system equipment that constitutes operational or functional interfaces with the subject system. Such units shall be included in the system illustrations.

b. Illustrate the use of the equipment. Only information pertaining to the user shall be prepared.

Source: https://assist.dla.mil -- Downloaded: 2016-12-09T23:24Z
Check the source to verify that this is the current version before use.

c. Location and contents of end-item and major component identification plates shall be illustrated. Modification information and warranty plates, stencils, or location of serial numbers shall be illustrated.

B.5.3.5 Equipment differences **<eqpdiff>**. Equipment differences shall be prepared and shall include the following:

a. Differences between models that affect operation, maintenance or interchangeability shall be described to allow for easy identification by the user.

b. Differences within the same model e.g. options, upgrades etc., shall be related explicitly to equipment part number, or serial number ranges to allow for easy identification of the specific equipment configuration involved.

Non-specific terms such as "on later equipment," “on later models,” and "on early serial numbers" shall not be used. References to other work packages such as “Decals and instruction plates” and content filtering through applicability may be used to supplement the above requirements. If there are no differences in the equipment the following statement shall be included:

"There are no equipment variations within (*insert system name*)."

B.5.3.6 Equipment data **<eqpdata>**.

a. Performance data shall be prepared, including numerical and other standard-related data applying to operational and maintenance functions. The equipment data shall summarize the specific capabilities and limitations of the equipment and other critical data needed by the TM user for maintenance of the equipment. Vehicle and cargo space dimensions and metric and other equivalents shall be included.
b. For systems, a list of the environmental control requirements, such as limited temperature, humidity, or other limited conditions shall be prepared. Reference shall be made to the work package(s) containing information on any damage to be expected from exceeding these limits and procedures for minimizing the damage.
c. A summary shall be prepared that lists the effects of weather conditions on equipment that could affect system capability or cause equipment damage. This summary shall include references to any special servicing procedures that must be accomplished because of climatic changes, such as adding antifreeze to coolants.
d. Instructions for the use, transportation, handling, storage, or disposal of such substances as fuels, toxic and hazardous substances, chemicals, ordnance, and munitions shall be prepared. These instructions shall meet the applicable requirements of the Federal Environmental Protection Standards (standards to be provided by the acquiring activity).
e. The energy efficiency rating shall be included for products that directly consume energy in normal operations and that commonly have a method of expressing energy efficiency.

Source: https://assist.dla.mil -- Downloaded: 2016-12-09T23:24Z
Check the source to verify that this is the current version before use.

B.5.4 Theory of operation work package **<thrywp>**. A theory of operation work package shall be prepared to provide the maintenance technician with adequate background information to support and perform maintenance tasks and troubleshooting on the weapon system, equipment, or components. DMWR/NMWR shall include this(these) work package(s) as required by the acquiring activity. The amount of detail and complexity of the theory of operation presentation shall be in accordance with the Logistics Product Data (LPD) maintenance concept, the MAC, or an approved maintenance plan. Theory of operation shall be provided as described in B.5.4.1 through B.5.4.3 . This work package shall not contain any operator or maintenance procedures.

B.5.4.1 Work package identification information **<wpidinfo>**. Work package identification information is required for this work package. (Refer to 4.7.9.3.)

B.5.4.2 Work package initial setup **<initial_setup>**. Initial setup is not required for this work package.

B.5.4.3 Theory presentation. Theory of operation shall consist of a functional narrative to explain the weapon system, equipment, and component operation (electrical/electronic, hydraulic, pneumatic, and mechanical). (Refer to MIL-HDBK-1222 for an example of theory of operation.) Block diagrams, functional flow diagrams, schematics, and other illustrations shall be included to support the text. Basic theory, normally found in textbooks, shall not be included. If the TM covers more than one model of equipment, or more than one configuration of a weapon system, the differences shall be explained or separate work packages may be used. Additional theory requirements are outlined in the following:

a. When necessary, introductory general information **<intro>** may precede the theory of operation narrative.
b. For simple systems or equipment/components, all theory **<systhry>** may be included in a single work package.
c. If the relative complexity of the weapon system/equipment is such that it is reasonable to first present the theory of the end item as a unit and then present the theory of its major system, subsystems, and components, it shall be presented in a series of work packages. A separate theory of operation work package shall be developed for each aircraft system. The work package may contain the functional operation for the system **<systhry>**, its subsystems **<ssysthry>** and its components (line replaceable units (LRUs)) **<lruthry>** and shop replaceable units (SRUs) **<sruthry>)**; or when necessary for usability or clarity, subsystem and component theory of operation may be provided in separate work packages. Subsystem component theory of operation may be included in either the subsystem theory of operation work package or in a separate component theory of operation work package. Detailed component functional operation, common circuitry, and wiring diagrams shall not be included unless they are necessary to understand the system/subsystem function.
d. Theory narrative shall be to a depth necessary to support the technician in fault isolation to the level directed by the LPD and/or maintenance plan. The operation of the weapon system and related systems/components shall be presented in a logical flow. Significant input, output, and control signals; supply voltages; and power supply output voltages shall be identified. If the equipment operates in more than one mode, each mode shall be explained and supported by functional block diagrams. Theory of operation shall describe detailed circuitry of all reparable components as directed by the LPD/maintenance plan.

Source: https://assist.dla.mil -- Downloaded: 2016-12-09T23:24Z
Check the source to verify that this is the current version before use.

Internal circuits, their relationship to each other, input and output signals, waveforms, and time-phase relationship to significant waveforms shall be included when required to understand detailed equipment operation. Theory shall not be prepared for nonreparable, throw-away components.

B.5.5 General information work package **(Aircraft Preventive Maintenance Services Manual or Preventive Maintenance Daily Manual only) <pms-ginfowp>**. This work package shall be prepared for Preventive Maintenance Services manuals and Preventive Maintenance Daily manuals. It shall contain the content requirements provided in B.5.5.1 and B.5.5.4. The italicized text shall be deleted and, as applicable, replaced with the appropriate information.

B.5.5.1 Work package identification information **<wpidinfo>**. Work package identification information is required for this work package. (Refer to 4.7.9.3.)

B.5.5.2 Work package initial setup **<initial_setup>**. Initial setup is not required for this work package.

B.5.5.3 Maintenance activities **<scope>**. The following text within quotes shall be included verbatim (italicized text within parentheses shall be replaced with the appropriate information).

"**SCOPE**

The Preventive Maintenance Services Inspection Checklist work package contains complete requirements for a (*insert specific inspection interval(s) here*) for the (*insert specific equipment here*). It does not contain instructions for repair, adjustment, or other means of rectifying conditions, nor does it contain instruction for troubleshooting to find causes for malfunctioning. Specific tolerances, limits, etc., can be found in the applicable maintenance manuals. Use of the alphabetical index in the applicable manuals will facilitate locating the required information."

B.5.5.4 General information **<pms-geninfo>**. The following text within quotes shall be included verbatim (italicized text within parentheses shall be replaced with the appropriate information).

"**INSPECTION REQUIREMENTS**

The inspection requirements contained in this work package are stated in such a manner as to establish when certain equipment is to be inspected and what conditions are desired/undesired. Compliance with the provisions outlined herein is required in order to ensure that latent defects are discovered and corrected before malfunctioning or serious trouble results. Inspection requirements are arranged, as nearly as possible, according to the manner in which they will be performed. The requirements are divided into groups and listed under the area heading in the "How To Use This Manual" portion of this manual and Figure (*insert figure number here*).

INSPECTION INTERVALS

The *(insert inspection interval here)* inspection will be performed every (*insert the specific aircraft hours here*) flight hours or (*insert specific calendar days here*) days, whichever comes first. The (*insert the specific aircraft hours here*) will not be extended except in actual operational emergencies. In no case shall the aircraft intentionally be

Source: https://assist.dla.mil -- Downloaded: 2016-12-09T23:24Z
Check the source to verify that this is the current version before use.

scheduled for a flight that will cause it to exceed the (*insert the specific aircraft hours here*) inspection due time. The (*insert specific calendar days here*) interval is a full (*insert the number of weeks here if applicable*) weeks. That is, if a (*insert specific calendar days here*) is done on Tuesday, the next (*insert specific calendar days here*) days inspection will not be due until *(insert the specific day here) (insert the specific number of weeks here*) later.

SPECIFIC NON-INSTALLED EQUIPMENT ON AIRCRAFT

This work package may contain inspection requirements applicable to specific equipment not installed on your aircraft. Those requirements should be disregarded.

DA FORMS

DA Form 2408-13-1 will be used to record all deficiencies or shortcomings discovered during the (*insert specific inspection interval here*). Use DA PAM 738-751 to properly complete this form.

SPECIAL INSTRUCTIONS

The (*insert inspection interval here*) will not be exceeded except in actual operational emergencies. When operational emergencies require aircraft operation beyond the normal inspection due-time, a circled red X status symbol and an appropriate statement (to include authority) must be entered in Part I, Fault Information block of DA Form 2408-13-1 (Aircraft Inspection and Maintenance Record) until such time as the inspection is complete. When inspections are delayed to meet emergency requirements, commanders will ensure that the aircraft status symbol reverts to a red "X" and that delayed inspections are accomplished immediately upon termination of the actual emergency. When unusual local conditions of environment, use, mission, experience of flight crew and maintenance personnel, periods of inactivity, etc., are encountered; the maintenance officer will, at his discretion, increase the scope and/or frequency of maintenance of inspections as necessary to ensure safe flight.

Aircraft that are down, Not Mission Capable Supply (NMCS), or Not Mission Capable Maintenance (NMCM), are deferred from the (*insert inspection interval here*) inspection until the aircraft is returned to flyable status. When the NMCS and/or NMCM condition is cleared from the aircraft that has been deferred, the (*insert inspection interval here*) must be done before the first flight. It is the maintenance office's responsibility to determine those inspections necessary during NMCS and/or NMCM to preserve the aircraft. Maintenance situations and climates vary too much to permit a definition of an adequate inspection of the aircraft in NMCS and/or NMCM status.

Accessing procedures and detailed inspection criteria can be found in the applicable maintenance manuals. Use the alphabetical index in the applicable manuals. Unless otherwise directed, removed panels and opened doors will be reinstalled and closed upon completion of each area inspection.

The total man-hour (M/H) requirements for a complete (*insert inspection interval here*) inspection is (*insert total number of man-hours here*) M/H.

Source: https://assist.dla.mil -- Downloaded: 2016-12-09T23:24Z
Check the source to verify that this is the current version before use.

REPORTING ERRORS AND RECOMMENDING IMPROVEMENTS

You can help improve this TM. If you find any mistakes or if you know of a way to improve the procedures, please let us know. Mail the DA Form 2028 directly to: (*insert mailing address*). You may also send in your recommended changes using electronic mail, by fax, or by the World Wide Web. Our fax number is (*insert DSN and commercial number of proponent)*. Our email address is (*insert email address of proponent*). Instructions for sending an electronic DA Form 2028 may be found at the back of the applicable technical manual. For World Wide Web, use https://amcom2028.redstone.army.mil. A reply will be furnished to you.

OZONE DEPLETING CHEMICALS

(*insert appropriate ODC statement here*)

HAZARDOUS MATERIALS (HAZMAT)

(*insert appropriate HAZMAT statement here*)

INSPECTION AREAS

Inspection areas are shown in (*enter WP(s) title and figure number*). ”

B.5.6 General information work package **(Aircraft Phased Maintenance Inspection manual only) <pm-ginfowp>**. This work package shall be prepared for Preventive Maintenance Inspection manuals and shall contain the content requirements provided in B.5.6.1 through B.5.6.3.

B.5.6.1 Work package identification information **<wpidinfo>**. Work package identification information is required for this work package. (Refer to 4.7.9.3.)

B.5.6.2 Work package initial setup **<initial_setup>**. Initial setup is not required for this work package.

B.5.6.3 General information **<geninfo>**. The information in B.5.6.3.1 and B.5.6.3.2 shall be included.

B.5.6.3.1 Phased schedule. One of the following shall be included verbatim as applicable (italicized text within parentheses shall be replaced with the appropriate information):

“**PHASED SCHEDULE**

The phased maintenance inspection checklist contains requirements for inspection of the (*insert aircraft model*) aircraft on a phased schedule having a (*insert flight hour cycle*) hour (*flight hours*) cycle with (*insert phase hours*) hour phases. Each requirement included herein is designated for accomplishment at least once, but not more than (*insert number of phases*) times during the (*insert flight hour cycle*) hour cycle."

OR

"**PROGRESSIVE PHASED MAINTENANCE SCHEDULE**

The progressive phased maintenance inspection checklist contains requirements for inspection of the (*insert aircraft model*) aircraft on a phased schedule of (*insert inspection interval*) hour intervals."

Source: https://assist.dla.mil -- Downloaded: 2016-12-09T23:24Z
Check the source to verify that this is the current version before use.

B.5.6.3.2 Additional general information. The following additional text shall be included verbatim (italicized text within parentheses shall be replaced with the appropriate information):

"EXCEEDING THE PHASED SCHEDULE

The phased maintenance inspection intervals designated are the maximum and shall not be exceeded except in actual operational emergencies as explained herein. It is the Commander's responsibility to determine (on an individual aircraft basis) when inspection intervals may be exceeded. For this purpose, operational emergencies are conditions of combat, or conditions of disaster which necessitate flight to evacuate aircraft or personnel. When aircraft are operated beyond the normal inspection due time because of such emergency situations, a circled red X status symbol and an appropriate statement (to include authority) must be entered on the appropriate aircraft form as specified in DA PAM 738-751 until such time as the inspection is complete. When inspections are delayed to meet emergency requirements, Commanders will ensure that the aircraft status symbol reverts to a red X and that delayed inspections are accomplished immediately upon termination of the actual emergency. When unusual local conditions (use, type of mission, personnel, periods of inactivity, environmental conditions, etc.) dictate, it is the prerogative and responsibility of the Maintenance Officer to increase the scope and/or frequency of maintenance or inspection as necessary to ensure safe operation (TM 1-1500-328-23).

MAINTENANCE ACTIVITIES

The inspections prescribed by this checklist will be accomplished at specified phases by Aviation Maintenance Company (AMC) activities with assistance of Aviation Support Battalion (ASB) and Depot Maintenance activities when required. The inspection of the part/component is visual unless stated otherwise.

LIMITATIONS

The checklist does not contain instructions for repair, adjustment, or other means of rectifying conditions. Neither does it contain special tolerances, limits, or instructions for special troubleshooting to find causes for malfunctions. Such data will be obtained from the latest issue of the aircraft (*insert applicable aircraft technical manuals*) series Maintenance Manuals.

CHANGEOVER TO THE PHASED MAINTENANCE SYSTEM

Changeover shall be accomplished in accordance with instructions provided in (*insert appropriate TM/TB*) entitled, (*Insert title*). The requirements of this TM/TB must be accomplished before implementation of Phase 1 inspection requirements specified in this checklist.

PRE-INSPECTION MAINTENANCE TEST FLIGHT (MTF)

A pre-inspection MTF to duplicate non-hazardous equipment problems, determine unsatisfactory conditions, determine equipment operation problems, etc., is recommended before start of aircraft disassembly for phased maintenance inspection. However, the decision to perform the pre-inspection MTF shall be the responsibility of the unit Maintenance Officer.

Source: https://assist.dla.mil -- Downloaded: 2016-12-09T23:24Z
Check the source to verify that this is the current version before use.

SPECIAL INSPECTIONS, CALENDAR INSPECTIONS AND LUBRICATION REQUIREMENTS

Special inspections, calendar inspections, and lubrication requirements contained in (*insert applicable aircraft technical manual*) and those listed on the aircraft's DA Form 2408-18 shall be reviewed and accomplished in accordance with the "inspection due" requirements specified in those documents.

TIME BETWEEN OVERHAUL (TBO) AND RETIREMENT LIFE ITEMS CHECK

Before the start of the applicable phased maintenance inspection, a check will be made of components and their remaining operating hours before removal. The latest issue of the aircraft's (*insert applicable aircraft technical manual*) and DA Form 2408-16 shall be referred to for a complete listing of components and their TBO and retirement life.

USING THE PHASED INSPECTION CHECKLIST

A new checklist shall be used each time phased maintenance is due on the aircraft. This checklist is arranged such that it can be separated by area and distributed to the maintenance crew. For use of the checklist, refer to DA PAM 738-751.

FINAL RECORDS CHECK

After all corrective actions have been completed and following completion of the phased inspection, the Technical Inspector or designated supervisor shall verify that all applicable forms and records have been properly updated. All uncorrected faults shall be entered on applicable aircraft forms in accordance with DA PAM 738-751. A Final Records Checklist shall be used to ensure forms and records have been inspected for completeness and accuracy before release of the aircraft from the phased maintenance inspection. The Personal Identification (PID) of the inspector verifying the final records check shall be entered adjacent to the indicated form or record on the Final Records Checklist. The PID entered shall be registered on the Signature Sheet adjacent to that person's signature.

MAINTENANCE OPERATIONAL CHECKS

After the completion of any required corrective actions to any of the components of a functional system of the aircraft, maintenance operational checks (MOCs) shall be performed on that system to determine the effectiveness of the maintenance actions performed and to verify the proper operation of that system. These MOCs shall be performed in accordance with TM 1-1500-328-23. DA Form 2408-13-1 will be used to record and sign off on the MOC performed.

MAINTENANCE TEST FLIGHT

When all required inspections have been accomplished and initialed in accordance with the previously mentioned procedure, the Maintenance Test Flight (MTF) shall be performed in accordance with the requirements of (*insert applicable aircraft technical manuals*) and TM 1-1500-328-23 using the MTF form in the MTF TM.

Source: https://assist.dla.mil -- Downloaded: 2016-12-09T23:24Z
Check the source to verify that this is the current version before use.

CHECKLIST DISTRIBUTION

The completion of each phased maintenance inspection shall be recorded on applicable forms as prescribed by DA PAM 738-751. The signed checklist, together with all forms prescribed by DA PAM 738-751, shall be filed. Disposition shall be in accordance with DA PAM 738-751 or specific instructions in the applicable aircraft TM.

INSPECTION AREAS

(*Insert WP title and figure number*) reflects the inspection areas of the (*insert applicable aircraft model*) aircraft. Those areas are titled as shown. Figure (*insert number*) shows the location of access doors and panels which require removal at various phased maintenance inspections

REPORTING ERRORS AND RECOMMENDING IMMPROVEMENTS.

(*insert appropriate reporting errors statement here*)"

B.6 **NOTES.**

The notes in Section 6 apply to this appendix.

Source: https://assist.dla.mil -- Downloaded: 2016-12-09T23:24Z
Check the source to verify that this is the current version before use.

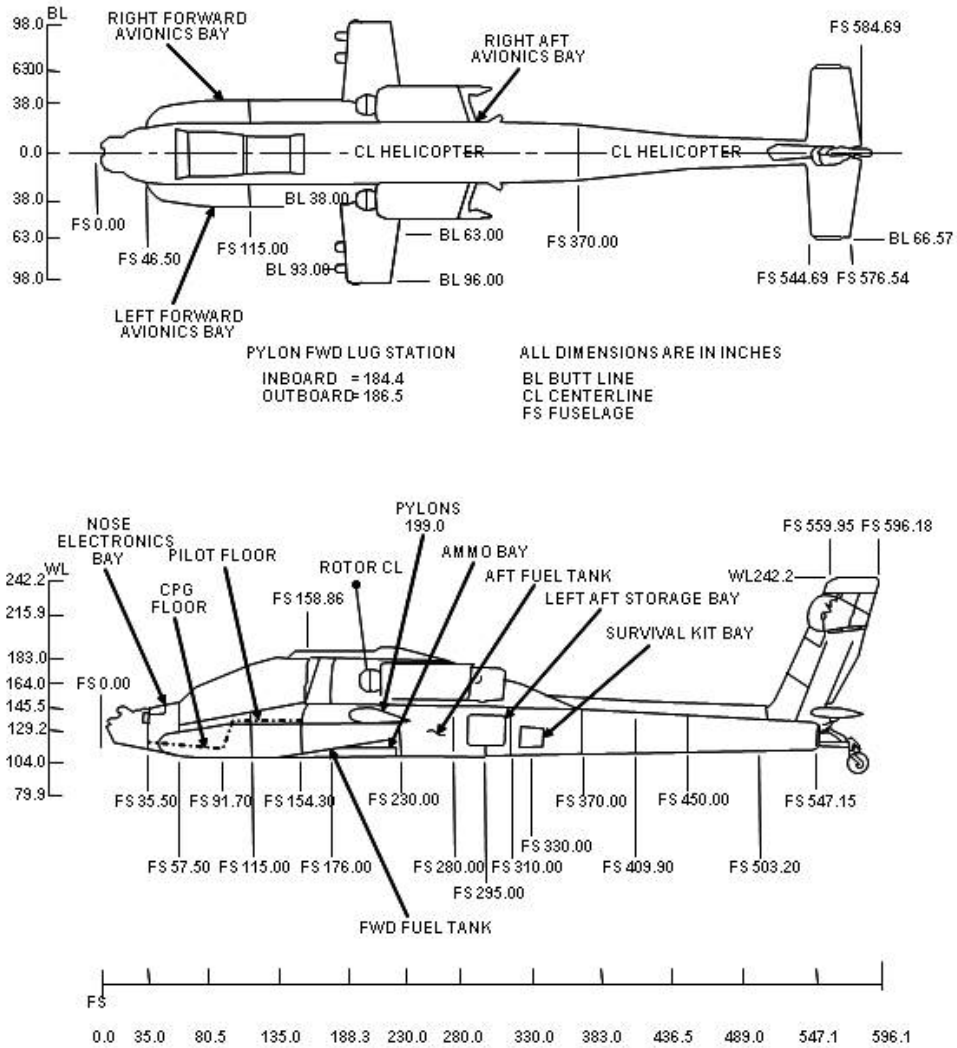

FIGURE B-1. <u>Example of a station diagram.</u>

Source: https://assist.dla.mil -- Downloaded: 2016-12-09T23:24Z
Check the source to verify that this is the current version before use.

This page intentionally left blank.

Source: https://assist.dla.mil -- Downloaded: 2016-12-09T23:24Z
Check the source to verify that this is the current version before use.

APPENDIX C
OPERATOR INSTRUCTIONS (EXCEPT AVIATION)

C.1 **SCOPE.**

C.1.1 Scope. This appendix establishes the technical content requirements for the preparation of operator instructions for major weapon systems, and their related systems, subsystems, equipment, assemblies, components, SRUs, and LRUs. This appendix is a mandatory part of this standard. The information contained herein is intended for compliance.

C.2 **APPLICABLE DOCUMENTS.**

The applicable documents in section 2 apply to this appendix.

C.3 **DEFINITIONS.**

The definitions in section 3 apply to this appendix.

C.4 **GENERAL REQUIREMENTS.**

C.4.1 General. Operator instructions shall be prepared for weapon systems, major equipment, components, and applicable support and interface equipment. Operating instructions shall describe the operations the crew (operator) is authorized to perform. Procedures and supporting illustrations shall be prepared so that personnel can prepare the weapon system/equipment for operation, identify and locate operational controls and indicators, and operate the weapon system/equipment safely and efficiently in both normal and emergency conditions. Unless otherwise specified, an Operator Instructions chapter shall be used for operator data. Multiple chapters should only be used for equipment that is very complex or that has multiple configurations.

C.4.2 Maintenance level/class applicability. Requirements contained in this appendix are applicable to operator class. An explanation of all applicable DA maintenance levels/classes is provided in section 3.

C.4.3 Preparation of digital data for electronic delivery. Data prepared and delivered digitally in accordance with this standard shall be XML tagged using the current Army DTD. Data shall be formatted for presentation using the Army style sheets. Refer to 4.6 for information on obtaining or accessing the Army DTD and style sheets. XML tags used in the DTD are noted throughout the text of this standard in bracketed, bold characters (e.g., **<descwp>**) as a convenience for the author and to ensure that the tags are used correctly when developing a document instance.

C.4.4 Use of the Document Type Definition (DTD)/style sheet. The DTD referenced in this appendix interprets the technical content and structure for the functional requirements contained in this standard. Development of the page-based TMs shall be accomplished through the use of this standard, the Army DTD, and the Army style sheets. MIL-HDBK-1222 provides further guidance and preferred style and format. The guidance in MIL-HDBK-1222 shall be followed unless it conflicts with the requirements in this standard.

Source: https://assist.dla.mil -- Downloaded: 2016-12-09T23:24Z
Check the source to verify that this is the current version before use.

C.4.5 Content structure. The examples provided herein are an accurate representation of the content structure requirements contained in this appendix and shall be followed to permit the effective use of the DTD.

C.4.6 Style and format. This standard provides style and format requirements for the technical content requirements described in this appendix. These requirements are considered mandatory and are intended for compliance.

C.4.7 Work package development. Data developed in accordance with this appendix shall be divided into work packages. These work packages should be stand alone and are broken into the following work package types: description and use of controls and indicators, operation under usual conditions, operation under unusual conditions, emergency, stowage and decal/data plate, and on-vehicle equipment loading. A work package shall contain all information and references required to support the work package type.

C.4.8 Safety devices and interlocks. Information shall be prepared pertaining to the purpose and location of all safety devices and interlocks in conjunction with the pertinent procedures.

C.4.9 Electrostatic Discharge (ESD) sensitive parts. If the equipment contains ESD sensitive parts, components, or circuits, cautions, and ESD labels shall be incorporated into the applicable tasks and procedures to ensure ESD sensitive parts are not damaged or degraded during maintenance and operation. (Refer to 4.7.20 for requirements on labeling with ESD.) Actions which could damage ESD sensitive parts, but which are not directly related to handling or operation of ESD sensitive parts, shall not be annotated with the ESD acronym, but shall be preceded by a caution statement.

C.4.10 Nuclear hardness **<hcp>**. If the weapon system/equipment has nuclear survivability requirements (e.g., over pressure and burst, thermal radiation, electromagnetic pulse, or transient radiation effects on electronics), cautions and HCP labels shall be incorporated into the applicable tasks and procedures to ensure the hardness of the equipment is not degraded during handling or operation. Refer to 4.7.19 for requirements on labeling with HCP. Actions which could degrade hardness, but which are not directly involved in establishing nuclear hardness, shall not be annotated with the acronym, but shall be preceded by a caution statement.

C.4.11 Selective application and tailoring of content using Appendix A matrixes. This standard contains some requirements that may not be applicable to the preparation of all TMs. Selective application and tailoring of requirements contained in this standard are the responsibility of the acquiring activity and shall be accomplished using APPENDIX A. The applicability of some requirements is also designated by one of the following statements: unless specified otherwise by the acquiring activity; as specified by the acquiring activity; or when specified by the acquiring activity.

C.5 **DETAILED REQUIREMENTS.**

C.5.1 Preparation of operator instructions. Operator instructions shall be prepared and subdivided into individual work packages that provide the operator of the weapon system/equipment with descriptions and use of controls and indicators; and operation of the weapon system/equipment under usual, unusual, and emergency conditions. Weapon system and equipment operator data shall be developed in narrative or tabular form, or by whatever method is the most effective in conveying the specific TM application.

Source: https://assist.dla.mil -- Downloaded: 2016-12-09T23:24Z
Check the source to verify that this is the current version before use.

C.5.2 Operator instructions work packages.

C.5.2.1 Work package content. Work packages shall include WP identification information, initial setup information, and all required operator instruction information. When initial setup information differs for specific operator instructions, additional work packages shall be developed. Work packages shall stand alone and contain complete start-to-finish operator procedures. The words "**END OF WORK PACKAGE**" shall be placed below the last data item (e.g., text, illustration, etc.) of the work package. The operator instructions work packages described in C.5.2.2 shall be prepared, as applicable. (Refer to MIL-HDBK-1222 for examples of work package identification information format.)

C.5.2.2 Types of operator instructions work packages. The following types of operator instructions work packages shall be developed, as applicable. Note however, in cases where operating instructions are divided by crew station assignment (or auxiliary equipment), work packages shall be developed to support each crew-served station.

a. Description and use of controls and indicators work package **<ctrlindwp>** (refer to C.5.2.2.1 and FIGURE C-1 .
b. Operation under usual conditions work package(s) **<opusualwp>** (refer to C.5.2.2.2). Refer to MIL-HDBK-1222 for example.
c. Operation under unusual conditions work package(s) **<opunuwp>** (refer to C.5.2.2.3). Refer to MIL-HDBK-1222 for example.
d. Emergency work package(s) **<emergencywp>** (refer to C.5.2.2.4). Refer to MIL-HDBK-1222 for example.
e. Stowage and decal/data plate guide work package **<stowagewp>** (refer to C.5.2.2.5). Refer to MIL-HDBK-1222 for example.
f. On-vehicle equipment loading plan work package **<eqploadwp>** (refer to C.5.2.2.6). Refer to MIL-HDBK-1222 for example.

C.5.2.2.1 Description and use of controls and indicators work package **<ctrlindwp>**. Information shall be prepared for the description and use of all system or equipment controls and indicators. A description and use of controls and indicators shall be prepared for each equipment, assembly, or control panel having controls and indicators. Controls and indicators shall be described using a tabular option or a narrative option (Refer to C.5.2.2.1.3 or C.5.2.2.1.4). The same format shall be used throughout the work package.

C.5.2.2.1.1 Work package identification information **<wpidinfo>**. Work package identification information is required for this work package. (Refer to 4.7.9.3.)

C.5.2.2.1.2 Work package initial setup **<initial_setup>**. Initial setup information is not required for this work package.

Source: https://assist.dla.mil -- Downloaded: 2016-12-09T23:24Z
Check the source to verify that this is the current version before use.

C.5.2.2.1.3 Controls and indicators description tabular option. This option shall describe each control and indicator in a tabular format. (Refer to FIGURE C-1.) The work package shall start with a short introduction **<intro>** that identifies the basic system, area, or other breakdown. The introduction shall be followed by one or more controls and indicators tables (**standard information per paragraph 4.7.13.7**) **<ctrlindtab>** with an associated illustration **<figure>** for each control and indicator. The number of controls and indicators standard information tables required is dependent on several factors. These factors include but are not limited to system complexity, different users (crew members/stations) or configuration differences. For each control and indicator, the following entries shall be provided:

a. An index number **<key>** is used on the illustration to locate and identify the control or indicator on the illustration.
b. The name (nomenclature) **<ctrlind>** of the control or indicator as it appears on the equipment. Controls and indicators that are not labeled, such as the accelerator or brake pedals, shall be identified. Each control and indicator shall be clearly labeled as it appears on the equipment.
c. A description of the function of the control or indicator **<function>** shall be described.

C.5.2.2.1.4 Controls and indicators description narrative option. This option provides a narrative approach to describe each control and indicator. This textual approach shall begin with a figure **<figure>** illustrating the control or indicator that is being described. The figure shall be followed by paragraphs **<ctrlinddesc>** describing each control or indicator shown in the figure. The narrative option for controls and indicators shall contain the same items as given in C.5.2.2.1.3 a - c. More than one figure and controls and indicators description may be used to improve user understanding.

C.5.2.2.2 Operation under usual conditions work package **<opusualwp>**. Instructions to operate the weapon system/equipment and auxiliary equipment in all modes of operation shall be prepared. Any combination of control settings that will create a hazard to personnel or cause damage to equipment shall be preceded by a warning or caution. Instructions to ensure proper grounding of equipment shall be prepared.

C.5.2.2.2.1 Work package identification information **<wpidinfo>**. Work package identification information is required for this work package. (Refer to 4.7.9.3.)

C.5.2.2.2.2 Work package initial setup **<initial_setup>**. Initial setup information is required for this work package. (Refer to 4.7.9.4.)

C.5.2.2.2.3 Operations under usual tasks **<opertsk>**. The operational tasks **<opertsk>** described in C.5.2.2.2.3.1 through C.5.2.2.2.3.10 shall be included, as applicable.

C.5.2.2.2.3.1 Security measures for electronic data **<secref>**. Instructions for handling, loading, purging, overwriting, or unloading classified electronic data under usual conditions shall be developed when the systems are classified, have non-volatile on-board memory that is required to be cleared prior to transportation, or for any other action that might compromise the data as the result of being accessed by unauthorized personnel. Instructions shall meet the requirements of current regulations as they pertain to automation security.

Source: https://assist.dla.mil -- Downloaded: 2016-12-09T23:24Z
Check the source to verify that this is the current version before use.

C.5.2.2.2.3.2 Siting requirements **<site>**. When siting instructions specific to the equipment exist, these instructions shall be prepared. Operational features shall be considered, such as the following:

a. Location.
b. Proximity to power sources.
c. Effective ranges.
d. Terrain requirements to avoid screening reflections, ground clutter, and other poor operational conditions due to terrain.
e. Technical requirements.
f. Shelter locations.
g. Compensating for adverse siting conditions.
h. Orientation to a baseline during siting when the equipment contains large components, such as towers and antennas.
i. Mobile equipment oriented during installation.

C.5.2.2.2.3.3 Shelter requirements **<shelter>**. When equipment is normally housed in a permanent or semi-permanent shelter (other than a military truck, van, or transportable shelter) during use, the following information shall be prepared:

a. Amount of floor, wall, and height space required to house the equipment.
b. A plan for a typical layout.
c. Required weight capacity of the building floor.
d. Dimensions required for installed equipment.
e. Total weight that the floor must support and the area in square feet over which the total weight will be distributed.
f. Environmental conditions (e.g., venting).
g. Power requirements.
h. Unusual requirements specific to the equipment, such as air-conditioning.
i. Architectural and engineering data on beam sizes, lengths, bending moments, and required supports shall not be included.

C.5.2.2.2.3.4 Assembly and preparation for use **<prepforuse>**. Procedures shall be prepared when unpacking, assembly, and installation is required. When the equipment is shipped or delivered in specially designed containers, unpacking instructions shall be prepared. If the containers are to be used again, kept for future use, turned in to supply, or if any special disposition is required, the necessary procedures shall be prepared. Assembly and installation procedures shall be prepared when needed. These instructions shall be supported by illustrations. As applicable, power requirements, connections, and initial control settings needed for installation purposes shall be included.

C.5.2.2.2.3.5 Initial adjustments before use and self-test **<initial>**. Procedures shall be prepared for any routine checks, self-test, or adjustments that the operator must make before putting the equipment in operation is required.

Source: https://assist.dla.mil -- Downloaded: 2016-12-09T23:24Z
Check the source to verify that this is the current version before use.

C.5.2.2.2.3.6 Operating procedures **<oper>**. The following operating instructions shall be prepared, as applicable:

a. All steps necessary to bring the equipment from OFF through STANDBY condition to full operation, including all necessary warnings and cautions.
b. Procedures for each mode of operation; e.g., manual, automatic, local, remote, etc. The use and relative advantage of each mode shall also be described.
c. Description of the equipment's anti-jamming and interference reduction features, the advantage of each feature, and the operating procedures to be followed. Supporting illustrations (such as indicator displays, waveforms, etc.) that provide typical observations of jamming and interference for evaluation by the operator shall be included.
d. Operator turn-off procedures, including all steps necessary to bring the equipment from full operation through STANDBY to OFF condition.
e. Operating procedures for misfire, hangfire, and other events applicable to ammunition.
f. Operating procedures explaining how the equipment is operated in conjunction with auxiliary equipment or how it operates when integrated with other equipment.
g. When specified by the acquiring activity, operating procedures containing the identification, loading, initializing, and downloading of applicable operational and diagnostic software shall be included. Identification of the software shall include the purpose, configuration applicability, and version information. Procedures that verify that the proper software has been loaded and is operating properly shall also be included. Examples of specific types of data that may be applicable to these work packages are:
   (1) Descriptions of screen data and interpretation of message formats.
   (2) Operator actions based on screen display.
   (3) Data entry by the Operator.
   (4) Saving or purging data.
   (5) Processing of messages.
   (6) Software transfer procedures.
   (7) Reviewing message and entry formats.

C.5.2.2.2.3.7 Operating procedure considerations. The following considerations should be taken into account when preparing operating procedures:

a. Initial safety requirements (actions, inspections, and emergency turn-off procedures).
b. If a particular operating procedure or step is assigned to a specific crew-served position (e.g., gunner), the assignment must be indicated.
c. Connection of any accessory equipment not permanently connected.
d. Instructions for obtaining or confirming the presence of all critical inputs such as power, coolant, air, signal, air-conditioning, etc. Specific values for critical inputs (power, coolant, air, etc.) shall also be included.
e. Procedures for setting controls and making adjustments that must be accomplished by the operator prior to equipment turn-on.
f. Procedures for determining operational readiness and the acceptable indications expected from built-in indicators, such as meters, lamps, gauges, displays, and recorder readouts.

Source: https://assist.dla.mil -- Downloaded: 2016-12-09T23:24Z
Check the source to verify that this is the current version before use.

g. Milestones in the operational status of the equipment, indicated by brief statements, such as "The generator is now in STANDBY."

h. Visual or audible observations that occur as a result of an operator action, such as boom lowering, sweep rotation, blower motor running, etc.

C.5.2.2.2.3.8 Operating auxiliary equipment **<operaux>**. If applicable, procedures shall be prepared for putting any auxiliary equipment into operation, operating it, and putting it in standby or shutdown status. If these procedures are published in another TM covering the auxiliary equipment, reference shall be made to that TM in accordance with 4.7.23.1.

C.5.2.2.2.3.9 Preparation for movement **<prepmove>**. Preparation for movement procedures shall be prepared if the equipment is designed for movement and it can be readied for movement by the operator. Procedures shall be prepared for actions such as disassembly, folding, and telescoping. Illustrations shall be prepared, as required, to support the text. This information shall not duplicate the "assembly and preparation for use" requirements contained in C.5.2.2.2.3.4.

C.5.2.2.2.3.10 Decals and instruction plates **<instructplt>**. Decals and operating instruction plates located on the equipment, which are essential for operation under usual conditions, shall be clearly illustrated, so that all information is legible. Related warning and caution decals and plates shall be included. An illustration(s) shall be prepared to show the location of all applicable decals and plates including item unique identification markings.

C.5.2.2.3 Operation under unusual conditions work package **<opunuwp>**. Instructions shall be prepared for operation under unusual conditions. Preventive or protective measures to be taken beyond the operator capabilities shall be identified. Instructions to ensure proper grounding of equipment shall be prepared, as applicable.

C.5.2.2.3.1 Work package identification information **<wpidinfo>**. Work package identification information is required for this work package. (Refer to 4.7.9.3.)

C.5.2.2.3.2 Work package initial setup **<initial_setup>**. Initial setup information is required for this work package. (Refer to 4.7.9.4.)

C.5.2.2.3.3 Operations under unusual tasks **<opunutsk>**. The operational tasks described in C.5.2.2.3.3.1 through C.5.2.2.3.3.7 shall be included, as applicable.

C.5.2.2.3.3.1 Security measures for electronic data **<secref>**. Instructions for handling, loading, purging, overwriting, or unloading classified electronic data under unusual conditions shall be provided. These instructions shall be developed when the systems are classified. Instructions shall meet the requirements of current regulations as they pertain to automation security. Procedures shall include but are not limited to:

a. Clearing non-volatile on-board memory that is required to be cleared before transport.

b. Any other action that allows the data to be accessed by unauthorized personnel.

C.5.2.2.3.3.2 Unusual environment/weather **<unusualenv>**. Procedures shall be prepared for operation under conditions of extreme moist heat, extreme dry heat, extreme cold, salt air, sea spray, dust storms, sand storms, high altitudes, snow, mud, and other similar adverse environmental/weather conditions. Ranges of environmental/weather operating conditions considered for the system addressed shall be defined.

Source: https://assist.dla.mil -- Downloaded: 2016-12-09T23:24Z
Check the source to verify that this is the current version before use.

C.5.2.2.3.3.3 Fording and swimming **<fording>**. If applicable, procedures for fording and swimming the equipment shall be provided.

C.5.2.2.3.3.4 Interim Chemical, Biological, Radiological, Nuclear and Explosives (CBRNE) decontamination procedures **<decon>**. As applicable and specified by the acquiring activity, interim general CBRNE decontamination procedures to be performed until CBRNE decontamination facilities are available shall be prepared. Other decontamination TMs shall be referenced only when necessary.

C.5.2.2.3.3.5 Jamming and Electronic Countermeasures (ECM) procedures **<ecm>**. As applicable, procedures shall be prepared for operation of the equipment in an ECM environment through transmitted and reflected deception signals and through transmitted and reflected jamming.

C.5.2.2.3.3.6 Degraded operation procedures **<degraded>**. When operation of the equipment in a degraded condition is required, procedures shall be prepared for temporarily adapting the equipment and the operating procedures to meet the reduction of power, partial failure, failure of a portion of the equipment, or similar conditions.

C.5.2.2.3.3.7 Decals and instruction plates **<instructplt>**. Decals and operating instruction plates located on the equipment, which are essential for operation under unusual conditions, shall be clearly illustrated, so that all information is legible. Related warning and caution decals and plates shall be included. An illustration(s) shall be prepared to show the location of all applicable decals and plates including item unique identification markings.

C.5.2.2.4 Emergency work package **<emergencywp>**. As applicable, emergency procedures for, but not limited to, operating and shutting down equipment during emergency conditions shall be prepared. Emergency work packages shall be marked as specified in 4.7.22.2.

C.5.2.2.4.1 Work package identification information **<wpidinfo>**. Work package identification information is required for this work package. (Refer to 4.7.9.3.)

C.5.2.2.4.2 Work package initial setup **<initial_setup>**. Initial setup is required for this work package. (Refer to 4.7.9.4.)

C.5.2.2.4.3 Emergency operation **<emergency>**. Procedures covering operation of the equipment during emergency conditions (control failure, air failure, lube oil failure, loss of cooling water, etc.) shall be provided. Emergency operating instructions shall be included. A warning or a caution to return the equipment to proper operation when the emergency is over shall also be included.

C.5.2.2.4.4 Emergency shutdown **<emergency>**. Procedures to turn the equipment off during an emergency (fire, water, smoke, hazard to personnel, loss of coolant, normal power, etc.) shall be provided.

C.5.2.2.4.5 Vehicle recovery. For vehicle manuals, information related to vehicle recovery and towing shall be included in the emergency work package.

C.5.2.2.5 Stowage and decal/data plate guide work package **<stowagewp>**. This work package shall be prepared as directed by the acquiring activity. The guide plan shall include information provided by the acquiring activity. The data described in C.5.2.2.5.1 through C.5.2.2.5.5 shall be included.

Source: https://assist.dla.mil -- Downloaded: 2016-12-09T23:24Z
Check the source to verify that this is the current version before use.

C.5.2.2.5.1 Work package identification information **<wpidinfo>**. Work package identification information is required for this work package. (Refer to 4.7.9.3.)

C.5.2.2.5.2 Work package initial setup **<initial_setup>**. Initial setup is not required for this work package.

C.5.2.2.5.3 Introduction **<intro>**. A brief scope statement shall be prepared explaining the purpose of the work package.

C.5.2.2.5.4 Stowage guide **<stowinfo>**. Data on the location of applicable COEIs, BII, and AAL items shall be prepared. An illustration shall be included to facilitate the location of the items.

C.5.2.2.5.5 Decal/data plate guide **<decalinfo>**. Data on the location of all decals and data plates including item unique identification (IUID) markings, if applicable, shall be prepared. As applicable, illustrations detailing the locations of the decals and data plates shall be included.

C.5.2.2.6 On-vehicle equipment loading plan work package **<eqploadwp>**. This work package shall be prepared when applicable to the equipment. The loading plan shall include information provided by the acquiring activity. The data described in C.5.2.2.6.1 through C.5.2.2.6.4 shall be included.

C.5.2.2.6.1 Work package identification information **<wpidinfo>**. Work package identification information is required for this work package. (Refer to 4.7.9.3.)

C.5.2.2.6.2 Work package initial setup **<initial_setup>**. Initial setup is not required for this work package.

C.5.2.2.6.3 Introduction **<intro>**. A brief scope statement shall be prepared explaining the purpose of the loading plan and identifying the equipment covered by the on-vehicle equipment loading plan work package.

C.5.2.2.6.4 Illustrated loading plan list(s) **<loaddesc>**. An illustration identifying and locating the on-vehicle equipment shall be included. External and internal views shall be used, if necessary. As applicable, both tactical and nontactical situation loading configurations shall be shown.

C.6 **NOTES.**

The notes in section 6 apply to this appendix.

Source: https://assist.dla.mil -- Downloaded: 2016-12-09T23:24Z
Check the source to verify that this is the current version before use.

CREW INSTRUCTIONS
DESCRIPTION AND USE OF OPERATOR CONTROLS AND INDICATORS

INTRODUCTION

The following tables and illustrations provide the description and use of the controls and indicators pertaining to the instrument and auxiliary panels, center console, steering column, floor-mounted/door-mounted seat exterior, M1079 van controls, and special purpose kit controls and indicators. Some switch locations on the auxiliary panels may be blank depending on the model of your vehicle controls.

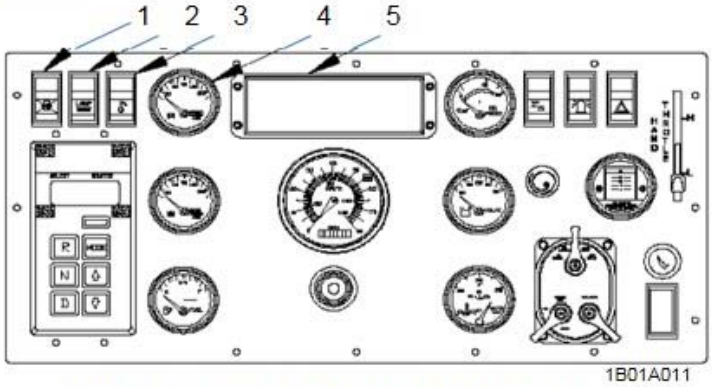

Figure 1. Instrument Panel Controls and Indicators

STEERING WHEEL REMOVED FOR CLARITY

Table 1. Instrument Panel Controls and Indicators

Key	Control/Indicator	Function
1	Radiator Fan Off Switch	When positioned on, radiator fan off switch will illuminate to indicate the radiator fan is disabled. Radiator fan off switch will remain in the off position and will not be illuminated, unless otherwise directed.
2	Lamp Test Switch	Tests the lights on high engine temperature and TRANS OIL TEMP indicators on Lighted Indicator Display.
3	Ether Start Switch	Injects ether into engine intake system to assist with cold weather starting when switch is pressed.
4	FRONT BRAKE AIR Pressure Gauge	Shows air pressure (in psi) available to operate front brakes. Normal air pressure range is 65-120 psi (448-827 kPa).
5	Lighted Indicator Display	Indicator lights to indicate operating characteristics of the vehicle. Figure 5 shows all indicators on the Lighted Indicator Display.

FIGURE C-1. Example of controls and indicators.

Source: https://assist.dla.mil -- Downloaded: 2016-12-09T23:24Z
Check the source to verify that this is the current version before use.

APPENDIX D
TROUBLESHOOTING PROCEDURES

D.1 SCOPE.

D.1.1 Scope. This appendix establishes the technical content requirements for the preparation of troubleshooting procedures for major weapon systems and their related systems, subsystems, equipment, assemblies, components, SRUs, and LRUs. This appendix is a mandatory part of this standard. The information contained herein is intended for compliance. The requirements are applicable for all maintenance levels/classes through overhaul (depot) including DMWRs and NMWRs.

D.2 APPLICABLE DOCUMENTS.

The applicable documents in section 2 apply to this appendix.

D.3 DEFINITIONS.

The definitions in section 3 apply to this appendix.

D.4 GENERAL REQUIREMENTS.

D.4.1 General. Troubleshooting procedures shall be prepared for weapon systems, major equipment, components, and applicable support and interface equipment. Troubleshooting procedures and supporting illustrations shall be prepared so that operator/crew and maintenance personnel can perform all required operator through depot level (overhaul) troubleshooting.

D.4.2 Development of troubleshooting instructions. Troubleshooting instructions shall cover all items comprising the weapon system/equipment, such as assemblies, subassemblies, components, wiring, junction boxes, and accessories. Troubleshooting procedures shall isolate faults to the part(s) authorized by the RPSTL and prescribe the corrective action authorized by the MAC at the maintenance level(s) covered by the publication. Tasks shall be presented in the order in which they are performed. Approved LPD, service experience, performance data on similar equipment, other RMS and Ao data available shall be used in the preparation of specific troubleshooting procedures. Troubleshooting procedures shall begin with diagnostic tests, observed problems, a fault symptom or malfunction and shall diagnose to a single fault/failure. Troubleshooting shall refer to specific maintenance tasks to correct the fault and include a reference to an operational checkout procedure or equivalent to verify fault was corrected. If corrective action cannot be performed at the same maintenance level, instructions will be provided to send to the appropriate level of maintenance authorized by the MAC and SMR code. Procedures shall include schematics and illustrations as needed (or shall reference to required schematics, etc.). As specified by the acquiring activity, troubleshooting steps/procedures may be repeated. Troubleshooting data shall be test and fault-isolation oriented. Troubleshooting instructions shall include detailed inspection and troubleshooting information. Instructions shall include or reference functional descriptions of subsystems being diagnosed to aid the operator/technician. The method used for identifying system equipment test points, including the requirements and methods of determining defects through visual inspection, shall be explained.

Source: https://assist.dla.mil -- Downloaded: 2016-12-09T23:24Z
Check the source to verify that this is the current version before use.

D.4.3 Maintenance level/class applicability. Requirements contained in this appendix are applicable to all maintenance levels/classes unless specifically labeled in bold and in parentheses. The labeled requirement may specify a specific level (e.g., **Field**) or a specific maintenance class (refer to 3.89) (e.g., **Maintainer** or **AMC**). The labeled requirement shall be applicable to all TMs containing that maintenance level/class. An explanation of applicable DDA maintenance levels/classes is provided in section 3.

D.4.4 Preparation of digital data for electronic delivery. Data prepared and delivered digitally in accordance with this standard shall be XML tagged using the current Army DTD. Data shall be formatted for presentation using the Army style sheets. Refer to 4.6 for information on obtaining or accessing the Army DTD and style sheets. XML tags used in the DTD are noted throughout the text of this standard in bracketed, bold characters (e.g., **`<descwp>`**) as a convenience for the author and to ensure that the tags are used correctly when developing a document instance.

D.4.5 Use of Document Type Definition (DTD)/style sheet. The DTD referenced in this appendix interprets the technical content and structure for the functional requirements contained in this standard. Development of the page-based TMs shall be accomplished through the use of this standard, the Army DTD, and the Army style sheets. MIL-HDBK-1222 provides further guidance and preferred style and format. The guidance in MIL-HDBK-1222 shall be followed unless it conflicts with the requirements in this standard.

D.4.6 Content structure. The examples provided herein are an accurate representation of the content structure requirements contained in this appendix and shall be followed to permit the effective use of the DTD.

D.4.7 Style and format. This standard provides style and format requirements for the technical content requirements described in this appendix. These requirements are considered mandatory and are intended for compliance.

D.4.8 Work package development. Data developed in accordance with this appendix shall be divided into work packages. These work packages should be stand alone and are broken into the following work package types: troubleshooting introduction, technical description, troubleshooting index, operational checkout, troubleshooting, diagnostic, preshop analysis, and component checklist. A work package shall contain all information and references required to support the work package type.

D.4.9 Safety devices and interlocks. Information shall be prepared pertaining to the purpose and location of all safety devices and interlocks in conjunction with the pertinent procedures.

D.4.10 Electrostatic discharge (ESD) sensitive parts. If the equipment contains ESD sensitive parts, components, or circuits, cautions and ESD labels shall be incorporated into the applicable tasks and procedures to ensure ESD sensitive parts are not damaged or degraded during maintenance and operation. (Refer to 4.7.20 for requirements on labeling with ESD.) Actions which could damage ESD sensitive parts, but which are not directly related to handling or operation of ESD sensitive parts, shall not be annotated with the ESD acronym, but shall be preceded by a caution statement.

Source: https://assist.dla.mil -- Downloaded: 2016-12-09T23:24Z
Check the source to verify that this is the current version before use.

D.4.11 Nuclear hardness **<hcp>**. If the weapon system/equipment has nuclear survivability requirements (e.g., overpressure and burst, thermal radiation, electromagnetic pulse, or transient radiation effects on electronics), cautions and HCP labels shall be incorporated into the applicable tasks and procedures to ensure the hardness of the equipment is not degraded during handling or operation. Refer to 4.7.19 for requirements on labeling with HCP. Actions which could degrade hardness, but which are not directly involved in establishing nuclear hardness, shall not be annotated with the acronym, but shall be preceded by a caution statement.

D.4.12 Selective application and tailoring of content using Appendix A matrixes. This standard contains some requirements that may not be applicable to the preparation of all TMs. Selective application and tailoring of requirements contained in this appendix are the responsibility of the acquiring activity and shall be accomplished using APPENDIX A. The applicability of some requirements is also designated by one of the following statements: unless specified otherwise by the acquiring activity; as specified by the acquiring activity; or when specified by the acquiring activity.

D.5 **DETAILED REQUIREMENTS.**

D.5.1 Testing and troubleshooting philosophy. Testing and troubleshooting data shall be developed to the extent required to maintain aircraft and other major weapon systems, equipment, components and support equipment at the authorized maintenance level in accordance with the LPD, MAC, and the SMR codes developed for the weapon system/equipment. Other factors to be considered in the development of troubleshooting procedures include, but are not limited to, the following:

a. Technical experience (target audience).
b. User environment.
c. System quick-turnaround requirements.
d. Test equipment requirements and availability.
e. Automated versus manual testing.
f. Replaceable component and part reliability.
g. Ease of testing.
h. Test access time.
i. Test time.

D.5.2 Information to be provided. Troubleshooting information shall be provided in combination with test procedures. This testing and troubleshooting information shall guide the technician, in as practical a manner as possible, to the system, subsystem, equipment, assembly, component, SRU, or LRU, or further to the replaceable part, interconnecting wire, or mechanical linkage, which caused the malfunction or failure. All information required to perform the tests and evaluate probable malfunctions of the assembled systems or equipment shall be provided.

Source: https://assist.dla.mil -- Downloaded: 2016-12-09T23:24Z
Check the source to verify that this is the current version before use.

D.5.2.1 Methods of testing and troubleshooting. The number of interrelated systems, assemblies, subassemblies, components, types of equipment, and the MAC shall be taken into consideration as to the type and depth of testing and troubleshooting instructions to be developed. Based on the complexity of the system or equipment, manual (non-automatic), semi-automatic or automatic testing and troubleshooting methods shall be used. Functional testing is usually performed using a test set or test console whereby technicians make end-to-end checks of the system or equipment to ensure it will perform the function it was intended to do.

D.5.2.1.1 Manual (non-automatic) troubleshooting. Troubleshooting procedures using non-automatic test equipment shall be established on a system test concept. To meet the objectives of reduced maintenance downtime and decreased fault detection time, malfunction symptoms shall be identified to specific points of entry into the testing/troubleshooting cycle. Every effort shall be employed to avoid repetition of time-consuming end-to-end tests.

D.5.2.1.2 Semi-automatic or automatic testing and troubleshooting. Many systems have been designed to use semi-automatic/automatic test equipment. These systems are designed and programmed for rapid electronic testing in the interest of reducing maintenance downtime to fault isolate and repair.

D.5.2.1.3 Testing and troubleshooting using built-in-test equipment (BITE). Many systems/pieces of equipment have been designed with BITE capabilities. BITE identifies faults to the operator or maintenance technician. BITE faults may be further isolated using diagnostic software or other troubleshooting procedures. When diagnostic software is used to isolate Built-In Test (BIT) faults, the software required to be used shall be identified in the TM.

D.5.2.1.4 Sensor derived failures. If the equipment/system has installed sensors, they shall be used to provide critical information on system operation or discrepancies.

D.5.2.1.5 Failure interpretation. Lookup tables for manually tested systems or software coding for semi-automatic and automatic systems shall be prepared so that the maintenance technician may properly interpret these displays and isolate and correct malfunctions.

D.5.2.2 Types of testing and troubleshooting information. Testing and troubleshooting information includes fault reporting/fault isolation data and detailed testing and troubleshooting procedures for each weapon system's equipment, systems, components, and support equipment. When applicable, integrated system testing and troubleshooting for aircraft and major weapon systems shall also be included.

D.5.2.2.1 Fault reporting/fault isolation information. Fault reporting information provides the crew member(s) or other operating personnel with a standardized means for reporting malfunctions and fault symptoms. Fault isolation information is designed for use in rapid isolation of faults revealed during an operational mission or when the aircraft/weapon system is in an operational configuration on the ground. This data shall instruct maintenance personnel as to what maintenance actions to perform and/or what procedures to use to correct reported faults. Fault reporting information and the fault isolation data are designed to be used together. Fault isolation information coverage shall be limited to faults identified in the fault reporting data that require specific procedures to isolate the cause. Fault reporting data shall reference the fault isolation data to the maximum extent practical for isolation of indicated malfunctions.

Source: https://assist.dla.mil -- Downloaded: 2016-12-09T23:24Z
Check the source to verify that this is the current version before use.

D.5.2.2.2 Integrated system testing and troubleshooting. When several systems are dependent upon each other for proper operation, the interdependent systems, as a unit, are identified as an integrated system. The testing of an integrated system is a checkout of the interdependent systems and shall reflect the assumption that the technician performing the check is qualified and is familiar with its systems and subsystems. Development and content of testing and troubleshooting for integrated systems shall be determined based on the systems having self-test or BIT capabilities, or requiring the use of a system peculiar test set, or common test equipment. These compound applications require more specifics on the criteria of which components or signals are tested by which method. In addition to coverage of the integrated system, the associated systems making up the integrated system shall be covered separately.

D.5.2.2.2.1 Integrated systems having self-test or built-in test (BIT) capability. Testing and troubleshooting procedures shall identify components or functions which are tested, and any additional input required for proper testing (power parameters, signals, motion, air, hydraulic, etc.). If wiring tests are included they should have defined testing parameters (which wires are tested, resistance tolerances, open definitions, wire-to-wire and wire-to-ground resistances, and any peculiar wire criteria) and what fault verification is required for a failure indication.

D.5.2.2.2.2 Integrated systems requiring the use of system peculiar test sets. Testing and troubleshooting procedures shall include identical parameters as those in D.5.2.2.2.1 with the additional requirement for special cables or support equipment that may be required.

D.5.2.2.2.3 Integrated systems requiring the use of common test equipment. Testing and troubleshooting procedures shall focus on actual readings or signal requirements so that sources of common test equipment will not be restricted.

D.5.3 Troubleshooting procedures content. The procedures shall contain all essential and pertinent information that would be included in any other form of maintenance procedure. This includes warnings, cautions, notes, power turn-on procedures, pre-checkout procedures, reference diagrams, and initial switch settings. In addition to external causes for malfunctions, troubleshooting should also identify symptoms resulting from failure of every spare and repair part authorized for replacement at user level. Troubleshooting procedures shall be prepared assuming one malfunction at a time is being corrected. The operator/technician shall be instructed to perform any applicable self-tests, alignments, and inspections before beginning any other troubleshooting procedures. As applicable, an operational check shall be specified to be performed after the fault is corrected to ensure correct operation of the system. Troubleshooting procedural instructions shall be prepared following these general requirements:

a. A concise explanation of the testing and troubleshooting format and an explanation of how to use the testing and troubleshooting procedures with the malfunction/symptom index, when applicable, shall be included.
b. The location for each component, accessory, connector, or junction box in the system under test shall be provided or a reference to the equipment description and data work package shall be included. The text and illustrations, as necessary, shall identify every test connector or other test point to be used in the test.

Source: https://assist.dla.mil -- Downloaded: 2016-12-09T23:24Z
Check the source to verify that this is the current version before use.

c. A complete list of test options shall be stipulated by the troubleshooting procedure. Any self-tests that are associated with the system shall be listed. Self-test schemes shall be described as the primary troubleshooting tool, with manual or automatic troubleshooting prepared to supplement the instructions where the self-test leaves off or fails to locate the malfunction. The procedure shall be built using system self-tests before using external test equipment.

d. Test setup procedures and post-test teardown procedures shall be included.

e. Complete step-by-step troubleshooting procedures, including instructions required for use and application of installed on-line testing equipment, shall be included. Procedures shall take into account controls, test point accessibility, indicator displays, and the feasibility of using BITE or automated test equipment where available.

f. Test procedures (e.g., system turn on, identification of time required to run and complete the system test, and an indication of any possible mid-test interruptions or stoppages and how to respond to them) shall be included.

g. Backup diagrams showing all test points, input and output signals, logic charts, schematics, signal flow diagrams, tables, and other illustrations as required for comprehensible understanding of the procedures shall be included.

h. Any information that will aid the operator/technician, such as waveforms; resistance data; fluid pressures; voltage levels; references to test diagrams, functional diagrams, text, etc.; and alignment procedures, checkout procedures, or other scheduled maintenance procedures shall be included. Connector numbers, pin designations, etc., shall be identified.

i. Special attention shall be given to interface wiring fault isolation procedures. Wiring fault isolation procedures shall include the following types of data, as applicable:

   (1) Specific wire reading access points and resistances for wiring components (where practical).

   (2) Wire-to-wire and wire-to-ground criteria for circuit integrity.

   (3) Special wire definition where required (including interconnecting criteria for proper sealing or terminal application), and special notations where wire harnesses should be completely replaced and not repaired.

   (4) It is also essential when developing fault isolation procedures to provide or refer to ground stud tables, which include type, location, and wires connected; charts for both connectors and terminal boards; and a wire number log to identify any wire with its prime wiring diagram.

D.5.4 Types of testing and troubleshooting. Depending on the type and complexity of the weapon system/equipment, the TM may contain the following testing and troubleshooting categories.

D.5.4.1 Aviation testing and troubleshooting category **(Aircraft Troubleshooting TMs only)** **`<troubleaviationcategory>`**. When developing Aircraft Troubleshooting TMs, the following work packages shall be developed as specified in their detailed paragraph:

a. Introduction work package **`<tsintrowp>`** (refer to D.5.5.3).

b. Technical description work package **`<techdescwp>`** (refer to D.5.5.4).

Source: https://assist.dla.mil -- Downloaded: 2016-12-09T23:24Z
Check the source to verify that this is the current version before use.

c. Troubleshooting index work package **<tsindxwp>** (refer to D.5.5.5).

d. Operational checkout work packages **<opcheckwp>** (refer to D.5.5.8.3).

e. Troubleshooting work packages **<tswp>** (refer to D.5.5.8.4).

f. Combined operational checkout and troubleshooting work package **<opcheck-tswp>** (refer to D.5.5.8.5).

D.5.4.2 Standard testing and troubleshooting category **<troublecategory>**. When developing TMs with maintenance level below depot, the following work packages shall be developed as specified in their detailed paragraph:

a. Introduction work package **<tsintrowp>** (refer to D.5.5.3).

b. Troubleshooting index work package **<tsindxwp>** (refer to D.5.5.5).

c. Operational checkout work packages **<opcheckwp>** (refer to D.5.5.8.3).

d. Troubleshooting work packages **<tswp>** (refer to D.5.5.8.4).

e. Combined operational checkout and troubleshooting work package **<opcheck-tswp>** (refer to D.5.5.8.5).

D.5.4.3 DMWR/NMWR testing and troubleshooting category **(depot only)** **<troubledmwrnmwrcategory>**. When developing DMWRs or NMWRs, the following work packages shall be developed as specified in their detailed paragraph:

a. Introduction work package **<tsintrowp>** (refer to D.5.5.3).

b. Troubleshooting index work package **<tsindxwp>** (refer to D.5.5.5).

c. Preshop analysis work package **<pshopanalwp>** (refer to D.5.5.6).

d. Component checklist work package **<compchklistwp>** (refer to D.5.5.7).

e. Operational checkout work packages **<opcheckwp>** (refer to D.5.5.8.3).

f. Troubleshooting work packages **<tswp>** (refer to D.5.5.8.4).

g. Combined operational checkout and troubleshooting work package **<opcheck-tswp>** (refer to D.5.5.8.5).

D.5.4.4 Master index testing and troubleshooting category **<masterindexcategory>**. When developing a TM with a master troubleshooting index, the Troubleshooting Index work package **<tsindxwp>** shall be developed. Refer to D.5.5.5.

D.5.5 Testing and troubleshooting work packages. Testing and troubleshooting work packages shall be developed for the overall weapon system/equipment and each maintainable system, subsystem, assembly, components, SRU, and LRU for each applicable maintenance level as indicated in the approved MAC.

D.5.5.1 Work package content. Work packages shall include WP identification information, initial setup, and all required testing and troubleshooting information. When initial setup differs for specific testing and troubleshooting procedures, additional work packages shall be developed. Work packages shall stand alone and contain complete start-to-finish troubleshooting procedures. Any follow-on maintenance that must be performed after troubleshooting is completed shall be included (e.g., disconnect external power, perform operational checks, etc.).

Source: https://assist.dla.mil -- Downloaded: 2016-12-09T23:24Z
Check the source to verify that this is the current version before use.

When the follow-on maintenance is extensive and is contained in a separate work package, a reference shall be made to the applicable work package. The words "END OF WORK PACKAGE" shall be placed below the last data item (e.g., text, illustration, etc.) of the work package.

D.5.5.2 Types of testing and troubleshooting work packages. The following types of testing and troubleshooting work packages shall be developed, as applicable. Refer to FIGURE D-1 through FIGURE D-8 and MIL-HDBK-1222 for typical examples of testing and troubleshooting work packages.

D.5.5.3 Introduction work package **<tsintrowp>**. This work package is required for aviation systems and is optional for non aviation systems. This work package shall describe the testing and troubleshooting process used to perform troubleshooting and shall include information on the methods used to perform troubleshooting. The general flow of the troubleshooting process shall be described and the general methods used to perform testing and troubleshooting shall be included. Any information peculiar to troubleshooting electrical subsystems and electronic equipment shall also be described. If a troubleshooting index **<tsindxwp>** is used, an explanation of the index shall be provided.

D.5.5.3.1 Work package identification information **<wpidinfo>**. Work package identification information is required for this work package (refer to 4.7.9.3).

D.5.5.3.2 Work package initial setup **<initial_setup>**. Initial setup is not required for this work package.

D.5.5.4 Technical description work packages **(Aircraft Troubleshooting Manuals only) <techdescwp>**. A technical description work package may be developed for each system and subsystem of the weapon system, as applicable. The work package shall, as applicable, include the information in D.5.5.4.1 through D.5.5.4.5.

D.5.5.4.1 Work package identification information **<wpidinfo>**. Work package identification information is required for this work package. (Refer to 4.7.9.3.)

D.5.5.4.2 Work package initial setup **<initial_setup>**. Initial setup is required for this work package. (Refer to 4.7.9.4.)

D.5.5.4.3 Equipment description and data **<descproc>**. When equipment description and data is required to support the testing and troubleshooting procedures, it shall be prepared in accordance with the requirements provided in B.5.3.3 through B.5.3.6, as applicable. If this information is provided in another TM, a reference to the TM may be included in lieu of including the descriptive data.

D.5.5.4.4 Controls and indicators **<ctrlindproc>**. When it is necessary to provide information concerning the description and use of the controls and indicators to support the testing and troubleshooting procedures, it shall be prepared in accordance with the requirements provided in C.5.2.2.1.3 or C.5.2.2.1.4, as applicable. If this information is provided in another TM, a reference to the TM may be included in lieu of including the controls and indicator data.

Source: https://assist.dla.mil -- Downloaded: 2016-12-09T23:24Z
Check the source to verify that this is the current version before use.

D.5.5.4.5 Theory of operation **<thryproc>**. When theory of operation is required to support the troubleshooting procedures, it shall be prepared in accordance with the requirements provided in B.5.4, as applicable. If this information is provided in another TM, a reference to the TM may be included in lieu of including the theory data.

D.5.5.5 Troubleshooting index work package **<tsindxwp>**. This work package shall be prepared as directed by the acquiring activity and consist of either a malfunction/symptom index **<tsindx.symptom>/<tsindx.messageword>** or a system/subsystem index **<tsindx.system>**.

D.5.5.5.1 Work package identification information **<wpidinfo>**. Work package identification information is required for this work package (refer to 4.7.9.3).

D.5.5.5.2 Work package initial setup **<initial_setup>**. Initial setup is not required for this work package.

D.5.5.5.3 Malfunction/symptom index **<tsindx.symptom>/<tsindx.messageword>**. When all probable faults have been determined and described, prepare a malfunction/symptom index work package using the exact description of the fault or symptom as was used in the troubleshooting procedures. This index shall include the following data:

a. For simple systems, list all fault symptoms or known malfunctions in alphabetical order by malfunction/ symptom **<malfunc>** or by built-in test code/fault message word **<messageword>.** Reference this information to the applicable testing and troubleshooting WP sequence number **<xref>/<link>/<extref>** or the required corrective action **<action>**.

b. For complex systems, list symptoms by subsystem categories **<tsindx.symptom-category>/<tsindx.messagewor-category>**, if necessary, and use codes such as FGC that help identify specific items. Group symptoms to common subsystem areas both in the malfunction/symptom index and in the troubleshooting procedures. For example, if a system has a data link, communications, radar, display, and tracking subsystems, the symptoms would be grouped into each related subsystem. All fault symptoms of a communications nature would fall under the communications subsystem. The symptoms may be further divided into functions within the communications subsystem that would be common. The same would be done for radar, data link, display, and tracking subsystems. Subsystem categories shall be listed in alphabetical order or by code.

c. Catalog malfunctions/symptoms by method of detection, if this aids usability.

d. Fault symptom descriptions (titles) shall be standardized between malfunction/symptom index work packages and troubleshooting procedures work packages.

D.5.5.5.4 Master malfunction/symptom index **<tsindx.symptom>**. When applicable, one troubleshooting malfunction/symptom index work package (refer to D.5.4.4) shall be prepared for all troubleshooting for the system/equipment.

D.5.5.5.5 System/subsystem index **<tsindx.system>**. This index shall consist of a list of specific systems, subsystems, assemblies and components requiring troubleshooting, referenced to the applicable testing and troubleshooting WP sequence number **<xref>/<link>/<extref>** or required corrective action **<action>**.

Source: https://assist.dla.mil -- Downloaded: 2016-12-09T23:24Z
Check the source to verify that this is the current version before use.

D.5.5.6 Preshop analysis work package **(DMWR/NMWR only) <pshopanalwp>**. Preshop analysis shall apply when data indicates that an inspection or test is more effective in determining the useful life of a system, subsystem, or component than a mandatory disassembly. Preshop analysis shall be prepared in accordance with D.5.5.6.1 through D.5.5.6.5.

D.5.5.6.1 Work package identification information **<wpidinfo>**. Work package identification information is required for this work package. (Refer to 4.7.9.3.)

D.5.5.6.2 Work package initial setup **<initial_setup>**. Initial setup is required for this work package. (Refer to 4.7.9.4.)

D.5.5.6.3 Scope **<scope>**. The purpose and coverage of the preshop analysis shall be stated.

D.5.5.6.4 Preparation Procedures **<proc>**.

a. Unpacking and special handling. Procedures shall be prepared for removing the item, assemblies, subassemblies, or components from the shipping containers and packaging material. Instructions shall be prepared on any needed handling requirements for hazardous material, electrostatic sensitive devices, precious metal content, classified material, or critical material. Instructions shall also be prepared for any special condemnation procedures for the item and its assemblies and subassemblies.
b. Checking attached documents. Instructions shall be prepared for checking all tags, forms, and documents attached to the item to determine the reason for its return and to identify any other obvious faults or damage.
c. External inspection. Procedures shall be prepared for external inspection of the item to determine if it is complete and if there is any obvious external damage.
d. Cleaning and preservation. Instructions shall be prepared for cleaning the item to prepare it for preshop analysis testing. The instructions shall include the procedures for any temporary preservation or corrosion protection measures needed to protect the item until the work required is started.

D.5.5.6.5 Preshop analysis procedures **<pshopanal>**. Detailed procedures shall be prepared for performing a preshop analysis. The acquiring activity shall determine if the preshop analysis procedures shall be a narrative or be structured as a checklist. The checklist shall permit the inclusion of the name and signature of the person performing the analysis and any remarks that are required based on the results of the analysis. If a narrative preshop analysis is not provided, a printable checklist shall be provided. When specified by the acquiring activity, an electronic checklist shall be provided in lieu of the narrative or printable checklist.

D.5.5.6.5.1 Narrative procedures **<proc>**. Preshop analysis text shall be presented in procedural format. Test and analysis procedures shall be presented in a logical sequence not to cause any unnecessary disassembly and in the order in which they should be performed. Each procedure shall be identified by a step number. Procedures shall be arranged in groups by major components, assemblies, and subassemblies. Each group shall be headed with an applicable title.

D.5.5.6.5.2 Checklist **<chklist>**. The checklist shall include the following data.

Source: https://assist.dla.mil -- Downloaded: 2016-12-09T23:24Z
Check the source to verify that this is the current version before use.

D.5.5.6.5.2.1 Cover sheet/frame **<coverpage>**. The cover sheet/frame (refer to FIGURE D-1) shall contain an area to record the following item information: part number **<partno>**; serial number **<serialno>**; NSN **<nsn>**; modifications required **<modreq>**; reason for overhaul or repair **<reason>**; unpacking of secondary items required **<secitem>**; review of tags **<revtag>** or forms **<revform>** with the item, name **<name>,** and signature **<sig>** of the person doing the analysis, and date **<date>**.

D.5.5.6.5.2.2 Introduction **<intro>**. When necessary, the table of tests and inspections shall be preceded by a brief explanation of its use.

D.5.5.6.5.2.3 Table of tests and inspections **<pshopckk.tab>**. This table shall have an entry for each test and inspection procedure. Each entry shall have, as a minimum, the following information: inspection point (the item or area to be inspected), condition, action, remarks, and identification of the personnel performing the inspection (refer to FIGURE D-2). If the procedure is too complex or lengthy to be included in the checklist, a reference to the WP where the procedures or actions are provided shall be included in the checklist.

D.5.5.7 Component checklist work package **(DMWR/NMWR only) <compchklistwp>**. A component checklist work package shall be prepared when required to support the preshop analysis procedures. In addition to the main components, subcomponents may be listed. This work package shall consist of the data described in D.5.5.7.1 through D.5.5.7.4.

D.5.5.7.1 Work package identification information **<wpidinfo>**. Work package identification information is required for this work package. (Refer to 4.7.9.3.)

D.5.5.7.2 Work package initial setup **<initial_setup>**. Initial setup is required for this work package. (Refer to 4.7.9.4.)

D.5.5.7.3 Introduction **<intro>**. When necessary, the checklist shall be preceded by a brief explanation of its use.

D.5.5.7.4 Component checklist **<compchklist>**. The checklist (refer to FIGURE D-3) shall contain the following data, of which item a is required and items b-j are as applicable:

a. Name/nomenclature of the equipment/item **<name>**.
b. Serial number **<serialno>**.
c. Date received **<daterec>**.
d. Received from (identify unit) **<recfrom>**.
e. Component name **<compname>**.
f. NSN **<nsn>**.
g. Part number/CAGEC **<partno>/<cageno>**.
h. Quantity required **<qty>**.
i. Quantity received **<qtyrec>**.
j. Visual damage found **<damage>**.

Source: https://assist.dla.mil -- Downloaded: 2016-12-09T23:24Z
Check the source to verify that this is the current version before use.

D.5.5.8 Operational checkout and troubleshooting procedures work packages. A series of work packages shall be developed containing operational checkout and troubleshooting procedures for integrated weapon systems and for each independent system and subsystem of the weapon system, as applicable. DMWRs/NMWRs shall include these work packages as required by the acquiring activity. The content and development requirements for these work packages are provided in D.5.5.8.1 through D.5.5.8.6.

D.5.5.8.1 Operational checkout and troubleshooting procedures content. Operational checkout and troubleshooting procedures shall guide a technician in as practical a manner as possible in detecting, isolating, and correcting system or equipment failure/malfunctions. Procedures shall ultimately lead to isolating faults to an appropriate adjustment, replaceable parts, interface wires, or mechanical linkage. Instructions shall direct repair or replacement of parts authorized for repair or replacement at the maintenance level covered. Procedures shall be accompanied by schematics, signal flow diagrams, waveforms, tables, and other illustrations for comprehensive understanding of the procedures. When schematics are required as backup data, they shall be referenced or they may be contained in the same WP. The schematics shall integrate fluid, mechanical, electrical, and electronic components. Illustrations may also be included that locate and identify the controls and displays used to perform the testing and troubleshooting procedures. If ATE is used and a Test Program Set has been developed, the operational checkout and troubleshooting procedures contained in the Test Program Set shall not be duplicated. A reference to the Test Program Set shall be provided.

D.5.5.8.2 Operational checkout and troubleshooting procedure work package development. Operational checkout and troubleshooting procedures shall be combined and contained in the same WP or may be developed in separate operational checkout and troubleshooting work packages. Based on the following factors, may be developed in a separate operational checkout and a separate troubleshooting work package (refer to D.5.5.8.5):

a. Complexity of the system/equipment.
b. The type of test equipment used.
c. System/equipment self-test or BIT capability.
d. Complexity of the test and troubleshooting procedures as determined by the task analysis.
e. Clarity and usability.

D.5.5.8.3 Operational checkout work package **<opcheckwp>**. Operational checkout procedures that subject an aircraft; or other type of a major weapon system; or their systems, subsystems, components, accessories, and items of equipment to prescribed conditions to determine if they will function in accordance with predetermined test parameters shall be developed. Operational checkout for DMWRs/NMWRs shall be developed as specified by the acquiring activity. An operational checkout work package may include test set hookup and disconnect procedures, index of test set message words, a reference index of test set or BIT/BITE fault codes and related actions, and further testing procedures related to the message words and fault codes. The words “END OF WORK PACKAGE” shall be placed below the last item (e.g., text, illustration, etc.) in any work package containing the operational checkout procedures. The information in D.5.5.8.3.1 through D.5.5.8.3.8 shall be included in the work package, as applicable.

Source: https://assist.dla.mil -- Downloaded: 2016-12-09T23:24Z
Check the source to verify that this is the current version before use.

D.5.5.8.3.1 Work package identification information **<wpidinfo>**. Work package identification information is required for this work package. (Refer to 4.7.9.3.)

D.5.5.8.3.2 Work package initial setup **<initial_setup>**. Initial setup is required for this work package. (Refer to 4.7.9.4.).

D.5.5.8.3.3 Introduction **<intro>**. When required, an introduction shall be included explaining how the operational checkout procedures are to be used to perform testing and how they relate to the associated troubleshooting work packages.

D.5.5.8.3.4 General procedures and precautions **<proc>**. Any general procedures that must be performed prior to checkout and precautions that must be taken during the performance of the checkout procedure shall be included.

D.5.5.8.3.5 Pretest setup procedures **<hookup>**. Procedures for connecting any test and accessory equipment, including cable connections, shall be included. Procedures for the initial setting of controls shall also be provided.

D.5.5.8.3.6 Operational checkout procedures **<opcheckproc>**. The selection of an operational checkout type shall be based on the type of system, equipment, or assembly/subassembly being addressed, the target audience, and the maintenance level of the operator/technician. Based on the complexity of the operational checkout to be performed, operational checkout procedures can be structured differently and therefore contain different content elements. The following methods shall be used to prepare operational checkout procedures. Once selected, the operational checkout method shall be prepared in accordance with the requirements outlined below.

D.5.5.8.3.6.1 Operational checkout test procedure **<opcheck>**. Operational checkout procedures **<testproc>** shall consist of a series of numbered steps **<step1>** and substeps **<step2>** - **<step6>**, which lead to an indication or condition **<indication>**. Based on the indications or conditions, a corrective action **<action>** shall be provided (refer to FIGURE D-4). This corrective action can either be stated as a specific remedy or can be a reference **<xref>/<link>** to a detailed troubleshooting procedure work package. This process is continued until the complete operational checkout procedure is completed. NOTE: The words "TESTING BRANCH" are used to break up the troubleshooting into branches to indicate to the user where in the troubleshooting they are. Also, makes commenting and linking in and out of troubleshooting procedures easier. Applies to any troubleshooting procedure. See FIGURE D-4 & FIGURE D-5.

D.5.5.8.3.6.2 Test set message word index **<messageindx>**. The message word index shall consist of a series of test set messages or bit-code words with message word description. Based on the message or bit-code word, a corrective action shall be stated. This corrective action can either be stated as a specific remedy or can be a reference **<xref>/<link>** to a detailed troubleshooting procedure work package.

D.5.5.8.3.6.3 Fault code reference index **<faultreports>**. The fault code reference index shall consist of a fault code(s) that leads to a corrective action. This corrective action can either be stated as a specific remedy or can be a reference **<xref>/<link>** to a maintenance work package. If applicable, additional follow-on operational testing procedures **<follow-on>** shall be included based on the corrective action.

Source: https://assist.dla.mil -- Downloaded: 2016-12-09T23:24Z
Check the source to verify that this is the current version before use.

D.5.5.8.3.7 Post-operational shutdown procedures **<disconnect>**. Procedures to return the aircraft, aircraft system, or equipment to its normal configuration, prior to operational checkout setup, if required, shall be included.

D.5.5.8.3.8 Follow-on maintenance **<follow-on>**. Instructions or reference to appropriate work packages related to any follow-on maintenance shall be included. Refer to E.5.3.2.3.11.

D.5.5.8.4 Troubleshooting work package **<tswp>**. Troubleshooting procedures for detecting, isolating, and correcting aircraft, aircraft systems, or other types of weapon systems and their subsystems, and equipment failures and malfunctions shall be developed. Troubleshooting for DMWRs/NMWRs shall be developed as specified by the acquiring activity. Work packages will relate either to a specific symptom or to a system, assembly, or component. Work packages related to a system of some complexity may contain more than one set of troubleshooting procedures directed to specific subsystems. The information in D.5.5.8.4.1 through D.5.5.8.4.8 shall be included in the work package, as applicable. Each malfunction shall end with one of the following:

a. When the corrective action can be performed at the same level of maintenance authorized to troubleshoot, the troubleshooting procedure shall end with a corrective action that includes a reference to the appropriate maintenance work package and to a work package (operational checkout, test or operating instructions) to confirm the malfunction was corrected.

b. When the corrective action cannot be performed at the same level of maintenance authorized to troubleshoot, then the troubleshooting procedure shall end with the following statement, "Send to next level of maintenance as authorized by MAC."

D.5.5.8.4.1 Work package identification information **<wpidinfo>**. Work package identification information is required for this work package (refer to 4.7.9.3).

D.5.5.8.4.2 Work package initial setup **<initial_setup>**. Initial setup is required for this work package. (Refer to 4.7.9.4.)

D.5.5.8.4.3 Introduction **<intro>**. When required, an introduction shall be included explaining how the troubleshooting procedures are to be used to perform troubleshooting and how they relate to the associated operational checkout work packages.

D.5.5.8.4.4 General procedures and precautions **<proc>**. Any general procedures that must be performed prior to troubleshooting and precautions that must be taken during the performance of the troubleshooting procedure shall be included.

D.5.5.8.4.5 Pretest setup procedures **<hookup>**. Procedures for connecting any test and accessory equipment, including cable connections, shall be included. Procedures for the initial setting of controls shall also be provided.

D.5.5.8.4.6 Troubleshooting procedures **<tsproc>**. The selection of a troubleshooting type shall be based on the type of system, equipment, or assembly/subassembly being addressed; the target audience description; and the maintenance level of the operator/technician. Based on the complexity of the troubleshooting to be performed, troubleshooting procedures can be structured differently and therefore contain different content elements. The following methods shall be used

Source: https://assist.dla.mil -- Downloaded: 2016-12-09T23:24Z
Check the source to verify that this is the current version before use.

to prepare troubleshooting procedures. Once selected, the troubleshooting method shall be prepared in accordance with the requirements specified by this document. Refer to MIL-HDBK-1222 for an example of a troubleshooting procedure.

D.5.5.8.4.6.1 Method A - Text-Logic **<logicproc>**. There are two options available in the **<logicproc>**:

a. Troubleshooting procedures for specific fault symptoms shall combine text and logic and consist of a series of tests **<test>** (steps and substeps) which lead to an indication or condition **<indication>** (usually stated in the form of a question). Based on these indications or conditions, a "YES" or "NO" response **<answer>** is provided that will guide the technician to either the next step or a series of steps **<test>**, or to a malfunction **<malfunc>** and corrective action **<action>** (refer to FIGURE D-5). This process is continued until the entire troubleshooting procedure is completed. The corrective action shall include a reference to the work package or paragraph **<xref>/<link>** that contains the data to perform the corrective action.

b. Functional flow trees (refer to MIL-HDBK-1222) may be used as a graphic to augment written troubleshooting procedures and shall not be the only means of presenting troubleshooting information. Functional flow trees shall only be used if the troubleshooting is simple, consists of one work package, and requires no warnings, cautions, or notes. If used, functional flow trees shall be searchable. A graphical example of functional flow tree troubleshooting is shown in MIL-HDBK-1222.

D.5.5.8.4.6.2 Method B - Text **<faultproc>**. Troubleshooting procedures shall consist of an all-inclusive series of specific fault symptoms for the system/equipment being troubleshot. For each fault symptom **<symptom>**, the probable malfunction or series of malfunctions **<malfunc>** that may have caused the fault shall be listed. For each probable malfunction identified, a corrective action **<action>** shall be stated with a reference to the work package or paragraph **<xref>/<link>** that contains the data to perform the corrective action (refer to FIGURE D-6).

D.5.5.8.4.6.3 Method C - Multiplex read codes **<muxproc>**. This method of troubleshooting is based on the use of computer generated MUX read code data. The MUX read code data are listed in troubleshooting sequence order by signal name.

a. Signal data. For each signal name **<signame>,** the following MUX read code data shall be provided (refer to FIGURE D-7).

   (1) Memory location **<memloc>**.

   (2) Memory data bit(s) **<memdata>**.

   (3) Condition **<condition>**.

   (4) Signal function **<sigfunc>**.

   (5) Remarks **<ckremarks>**.

   (6) Pass **<criteria>**.

   (7) Fail **<criteria>**.

Source: https://assist.dla.mil -- Downloaded: 2016-12-09T23:24Z
Check the source to verify that this is the current version before use.

b. The MUX read code data. The MUX read code data is used in conjunction with a malfunction/symptom index (refer to D.5.5.5.4) and an operational checkout procedure (refer to D.5.5.8.3.6). For each system or equipment, the MUX read code data shall be listed under the system or equipment name by the specific malfunction/symptom.

D.5.5.8.4.7 Post-operational shutdown procedures **<disconnect>**. If required, procedures to return the equipment to its normal configuration prior to troubleshooting setup shall be included.

D.5.5.8.4.8 Follow-on maintenance **<follow-on>**. Instructions or reference to appropriate work packages related to any follow-on maintenance shall be included. Refer to E.5.3.2.3.11.

D.5.5.8.5 Combined operational checkout and troubleshooting work package **<opcheck-tswp>**. Combined operational checkout and troubleshooting procedures to verify proper operation to prescribed standards and for detecting, isolating, and correcting system and equipment failures and malfunctions shall be developed. Combined operational checkout and troubleshooting for DMWRs/NMWRs shall be developed as specified by the acquiring activity. The following information in D.5.5.8.5.1 through D.5.5.8.5.8 shall be included, as applicable.

D.5.5.8.5.1 Work package identification information **<wpidinfo>**. Work package identification information is required for this work package. (Refer to 4.7.9.3.)

D.5.5.8.5.2 Work package initial setup **<initial_setup>**. Initial setup is required for this work package. (Refer to 4.7.9.4.)

D.5.5.8.5.3 Introduction **<intro>**. When required, an introduction shall be included explaining how the operational checkout and troubleshooting procedures are to be used to perform checkout and troubleshooting and how they relate to the associated maintenance work packages that include the corrective actions that will return the equipment to proper operation.

D.5.5.8.5.4 General procedures and precautions **<proc>**. Any general procedures that must be performed prior to checkout and precautions that must be taken during the performance of the checkout procedure shall be included.

D.5.5.8.5.5 Pretest setup procedures **<hookup>**. Procedures for connecting any test and accessory equipment, including cable connections, shall be included. Procedures for the initial setting of controls shall also be provided.

D.5.5.8.5.6 Operational checkout and troubleshooting procedures. Operational checkout and troubleshooting procedures may be combined in a single procedure or may be prepared as a separate operational checkout procedure and a separate troubleshooting procedure.

D.5.5.8.5.6.1 Combined operational checkout and troubleshooting procedures **<opcheck-tsproc>**. Combined operational checkout and troubleshooting procedures shall consist of a series of test procedures **<testproc>** (steps and substeps) that lead to an indication or condition **<indication>**. When a normal indication is obtained, the operational checkout continues until the complete checkout is completed or until an abnormal condition or indication is observed. When the test procedure results in an abnormal indication or condition, a malfunction **<malfunc>** or a series of malfunctions is provided. For each malfunction, the possible corrective actions **<action>** shall be provided (refer to FIGURE D-8). When required, the corrective action may include a reference to the work package or paragraph **<xref>/<link>** that contains the data to perform the corrective action.

Source: https://assist.dla.mil -- Downloaded: 2016-12-09T23:24Z
Check the source to verify that this is the current version before use.

D.5.5.8.5.6.2 Separate operational checkout procedures **<opcheckproc>**. When it is determined that the operational checkout procedures shall be separate from the troubleshooting procedures, the operational checkout procedures shall be included under the heading "OPERATIONAL CHECKOUT." Operational checkout procedures shall be developed in accordance with D.5.5.8.3.6.

D.5.5.8.5.6.3 Separate troubleshooting procedure **<tsproc>**. When it is determined that the troubleshooting procedures shall be separate from the operational checkout procedures, the troubleshooting procedures shall be included under the heading "TROUBLESHOOTING." Troubleshooting procedures shall be developed in accordance with D.5.5.8.4.6.

D.5.5.8.5.7 Post-operational shutdown procedures **<disconnect>**. Procedures to return the aircraft, aircraft system, or equipment to its normal configuration, prior to operational checkout or troubleshooting setup, if required, shall be included.

D.5.5.8.5.8 Follow-on maintenance **<follow-on>**. Instructions or reference to appropriate work packages related to any follow-on maintenance shall be included. Refer to E.5.3.2.3.11.

D.5.5.8.6 Integrated system troubleshooting procedures work packages. When specified by the acquiring activity, integrated system operational checkout and troubleshooting (refer to D.5.2.2.2) shall be developed. Troubleshooting procedures which involve more than one system or more than one major subsystem and which cannot be logically placed in one of the individual system/subsystem troubleshooting information work packages shall be covered in this type of work package. The content and structure of this work package shall be as described in D.5.5.8.3 and D.5.5.8.4 or D.5.5.8.5.

D.6 **NOTES.**

The notes in section 6 apply to this appendix.

Source: https://assist.dla.mil -- Downloaded: 2016-12-09T23:24Z
Check the source to verify that this is the current version before use.

This page intentionally left blank.

Source: https://assist.dla.mil -- Downloaded: 2016-12-09T23:24Z
Check the source to verify that this is the current version before use.

TM X-XXXX-XXX-XX 0079

PRESHOP ANALYSIS
FOR
P/N _____

Serial No. _____
NSN _____

MWOs Required _____

Reason(s) for Overhaul/Repair _____
_____
_____
_____

Unpacking Secondary Items Required? _____

Reviewed Tags? _____

Reviewed Forms? _____

Name (please print) _____

Signature _____ Date _____

0079-2

FIGURE D-1. Example of a cover sheet for preshop analysis checklist.

Source: https://assist.dla.mil -- Downloaded: 2016-12-09T23:24Z
Check the source to verify that this is the current version before use.

Table 1. Preshop Analysis Checklist

Inspection Point	Condition	Action	Remarks	Date Checked	Checked by
(1) Pump Housing	Inspect for obvious damage, signs of leakage, overheating, and overall condition	External Visual Inspection			
(2) Equipment Data Plate and Pump Markings	Inspect for legibility, unwanted paint, and general condition.	External Visual Inspection			
(3) Pressure Regulating Valve (TYPE I)	Inspect for damage to threads and mounting surfaces.	External Visual Inspection			
(4) Check Valve (TYPE II)	Inspect for damage to threads and mounting surfaces.	External Visual Inspection			
(5) Check Valve (TYPE III)	Inspect for damage to threads and mounting surfaces.	External Visual Inspection			
(6) Pressure Relief Valve (TYPE IV)	Inspect for damage to threads and mounting surfaces.	External Visual Inspection			
(7) Check Valve (TYPE V)	Inspect for damage to threads and mounting surfaces.	External Visual Inspection			
(8) Filter Bypass Valve (TYPE VI)	Inspect for damage to threads and mounting Surfaces.	External Visual Inspection			
(9) Programming Valve (TYPE VII)	Inspect for damage to threads and mounting surfaces.	External Visual Inspection			
(10) Filter Bypass Valve (TYPE VIII)	Inspect for damage to threads and mounting surfaces.	External Visual Inspection			
(11) Temperature Sensor (TYPE IX)	Check sensor and electrical connector for damage.	External Visual Inspection			
(12) Oil Pressure Sensor (TYPE X)	Check sensor and electrical connector for damage.	External Visual Inspection			
(13) Magnetic Particle Detector Assembly (TYPE XI)	Inspect for damage to threads and mounting surfaces. Check that assembly is magnetized.	External Visual Inspection			

FIGURE D-2. Example of a table of tests and inspections for a preshop analysis.

Source: https://assist.dla.mil -- Downloaded: 2016-12-09T23:24Z
Check the source to verify that this is the current version before use.

TM X-XXXX-XXX-XX 0080

DEPOT TROUBLESHOOTING
COMPONENT CHECKLIST

INITIAL SETUP:
NOT APPLICABLE

SCOPE

This work package includes a list which is to be copied for each item received for a preshop analysis. After copying one list for each item, the information required must be completed on the checklist prior to the preshop analysis.

COMPONENT CHECKLIST

Name/nomenclature of the Equipment/item_____

Serial number_____

Date received _____

Received from (identify unit)_____

Component name _____

NSN_____

Part number_____

Quantity required_____

Quantity received_____

Visual damage found_____

END OF WORK PACKAGE

0080-1/blank

FIGURE D-3. Example of a component checklist.

Source: https://assist.dla.mil -- Downloaded: 2016-12-09T23:24Z
Check the source to verify that this is the current version before use.

TM X-XXXX-XXX-XX 0012

OPERATOR TROUBLESHOOTING
OPERATIONAL CHECKOUT PROCEDURE
LOAD HANDLING SYSTEM TRAILER (LHST)

INITIAL SETUP:

Personnel Required	**Equipment Conditions**
Maintainer (1)	Trailer coupled (TM 9-2320-392-10-1)

PROCEDURE

WARNING

Remove rings, bracelets, watches, necklaces, and any other jewelry before working around vehicle. Jewelry can catch on equipment and cause injury or short across electrical circuit and cause severe burns or electrical shock. Failure to comply may result in injury to personnel.

NOTE

This work package does not supersede Preventative Maintenance Checks and Service (PMCS). After you have determined that your LHST is fully functional, perform scheduled PMCS (WP 0052 00).

TESTING – BRANCH 1

1. Check if lights illuminate

CONDITION/INDICATION

Lights do not illuminate when activated in towing vehicle.

CORRECTIVE ACTION

Check towing vehicle to ensure light controls are in correct mode. Check connector points at each light not working. If fault still exists, notify field maintenance.

0012-1

FIGURE D-4. Example of content for an operational checkout procedure.

Source: https://assist.dla.mil -- Downloaded: 2016-12-09T23:24Z
Check the source to verify that this is the current version before use.

TESTING – BRANCH 2

2. Check if drawbar will raise/lower.

CONDITION/INDICATION

Drawbar does not raise and/or lower.

CORRECTIVE ACTION

Check for kinks or leaks in pneumatic hoses. If fault still exists, notify field maintenance.

TESTING – BRANCH 3

3. Check if flatrack locks will lock/release.

CONDITION/INDICATION

Flatrack locks will not lock and/or release.

CORRECTIVE ACTION

Check for kinks or leaks in pneumatic hoses. If fault still exists, notify field maintenance.

TESTING – BRANCH 4

4. Check if front suspension will raise/lower using height actuation valve.

CONDITION/INDICATION

Front suspension will not raise and/or lower.

CORRECTIVE ACTION

Check for kinks or leaks in pneumatic hoses. If fault still exists, notify field maintenance.

FIGURE D-4. Example of content for an operational checkout procedure - Continued.

Source: https://assist.dla.mil -- Downloaded: 2016-12-09T23:24Z
Check the source to verify that this is the current version before use.

TESTING – BRANCH 5

5. Check if ABS Diagnostic Tool is operating.

CONDITION/INDICATION

ABS Diagnostic Tool does not operate.

CORRECTIVE ACTION

Notify field maintenance.

TESTING – BRANCH 6

6. Check if flatrack rail will raise/lower.

CONDITION/INDICATION

Flatrack rail will not raise and/or lower.

CORRECTIVE ACTION

Check for debris/rust in path. If fault still exists, notify field maintenance.

TESTING – BRANCH 7

7. Check if shuttle will operate.

CONDITION/INDICATION

Shuttle will not roll forward and/or back.

CORRECTIVE ACTION

Check for debris/rust in path. If fault still exists, notify field maintenance.

END OF WORK PACKAGE

0012-3/4 blank

FIGURE D-4. Example of content for an operational checkout procedure - Continued.

Source: https://assist.dla.mil -- Downloaded: 2016-12-09T23:24Z
Check the source to verify that this is the current version before use.

TM X-XXXX-XXX-XX 0151

MAINTAINER TROUBLESHOOTING
DRIVER SIDE HEADLIGHT DOES NOT ILLUMINATE

INITIAL SETUP:

Tools and Special Tools
Multimeter (WP 1252, Item 68)
Tool Kit, General Mechanic's (WP 1252, Item 136)

Materials
Dispenser, Pressure Sensitive Adhesive Tape (WP 1251, Item 36)
Strap, Tiedown (WP 1251, Item 52)

Personnel Required
Mechanic 91B (1)
Helper (1)

References
WP 0750
WP 0751
WP 0796
WP 0798
WP 0808

Equipment Condition
Engine Stopped (TM X-XXXX-XXX-10
Master Power Switch OFF (TM X-XXXX-XXX-10)
Wheels chocked (TM X-XXXX-XXX-10)

Drawings Required
Headlights FP-55

TROUBLESHOOTING PROCEDURE

Driver Side Headlight Does Not Illuminate

WARNING

Contact with a live electrical circuit could cause burns or other severe injury. Never work on electrical system without toggling Master Power switch OFF. Toggle battery disconnect switches off before working under hood or on vehicle electrical system. Remove all jewelry before conducting maintenance. Do not wear watches, rings, identification tags or other jewelry which could short across electrical components or catch on vehicle components. Failure to comply may result in injury or death to personnel.

NOTE

Refer to FP-55 as needed for reference to electrical schematics. Label all electrical connections prior to removal. Remove cable ties as required.

TESTING – BRANCH 1

1. Toggle Master Power switch ON (TM X-XXXX-XXX-10).
2. Service drive (SER. DRIVE) lights ON (TM X-XXXX-XXX-10).
3. Inspect driver side headlight.

CONDITION/INDICATION

Does driver side headlight operate?

DECISION

NO – Go to step 4

YES – Troubleshooting complete

0151-1

FIGURE D-5. Example of content for a troubleshooting procedure (Method A).

Source: https://assist.dla.mil -- Downloaded: 2016-12-09T23:24Z
Check the source to verify that this is the current version before use.

TESTING – BRANCH 2

4. Toggle Master Power switch OFF (TM X-XXXX-XXX-10).
5. Remove driver side headlight access panel (WP 750).
6. Disconnect 3526-GG5C11 (Figure 1, Item 1) form HDLP LOW connector (Figure 1, Item 2)
7. Connect positive (+) probe of multimeter to 3526-GG5C11 (Figure 1, Item 1).
8. Connect negative (-) probe of multimeter to know good ground.
9. Service drive (SER. DRIVE) lights ON (TM X-XXXX-XXX-10).

CONDITION/INDICATION

. Are 24 VDC present between 3526-CGC11 left front lights harness and a know good ground?

DECISION

YES – Go to step 10

NO – Go to: Service stop lights(s) malfunction WP 0152

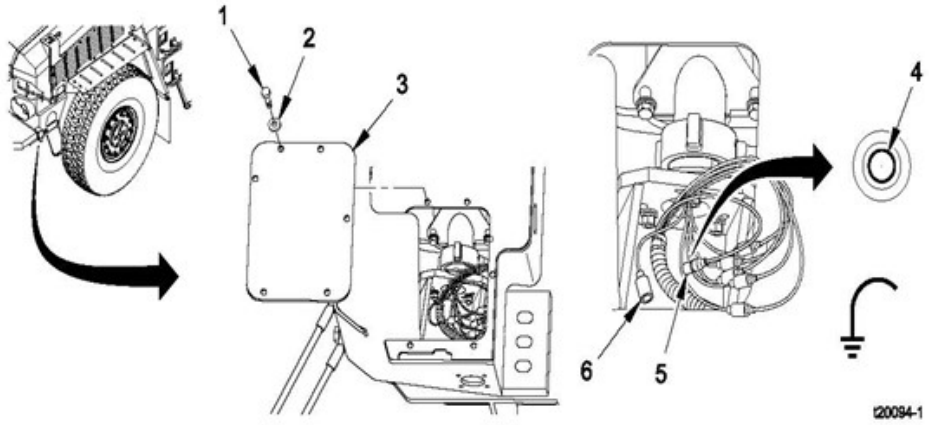

Figure 1. 3526-CG5C11 voltage test.

FIGURE D-5. <u>Example of content for a troubleshooting procedure (Method A)</u> - Continued.

Source: https://assist.dla.mil -- Downloaded: 2016-12-09T23:24Z
Check the source to verify that this is the current version before use.

TM X-XXXX-XXX-XX 0251

MAINTAINER TROUBLESHOOTING
CHARGING SYSTEM TROUBLESHOOTING

INITIAL SETUP:

Tools
Tool Kit, General Mechanic's:
Automotive (Vol 2, WP 0267, Item 81)
Wrench, Torque 75 ft-lb
(Vol 2, WP 0267, Item 96)

Equipment Condition
Engine OFF (TM 10-3930-660-10)
Parking brake applied
(TM 10-3930-660-10)
Wheels chocked (TM 10-3930-660-10)

References
WP 0097
WP 0141
WP 0095)
WP 0096

TROUBLESHOOTING PROCEDURE

CHARGING SYSTEM TROUBLESHOOTING

SYMPTOM

Alternator not charging or insufficiently charging.

MALFUNCTION

Loose or corroded battery connections.

CORRECTIVE ACTION

1. Check for loose or corroded battery connections.
2. Clean and tighten battery connections as needed (WP 0141).

MALFUNCTION

Alternator belt slipping.

CORRECTIVE ACTION

1.Check if **for alternator belt slippage.**

0251-1

FIGURE D-6. Example of content for a troubleshooting procedure (Method B).

Source: https://assist.dla.mil -- Downloaded: 2016-12-09T23:24Z
Check the source to verify that this is the current version before use.

TROUBLESHOOTING PROCEDURE

CHARGING SYSTEM TROUBLESHOOTING - Continued

CORRECTIVE ACTION - Continued

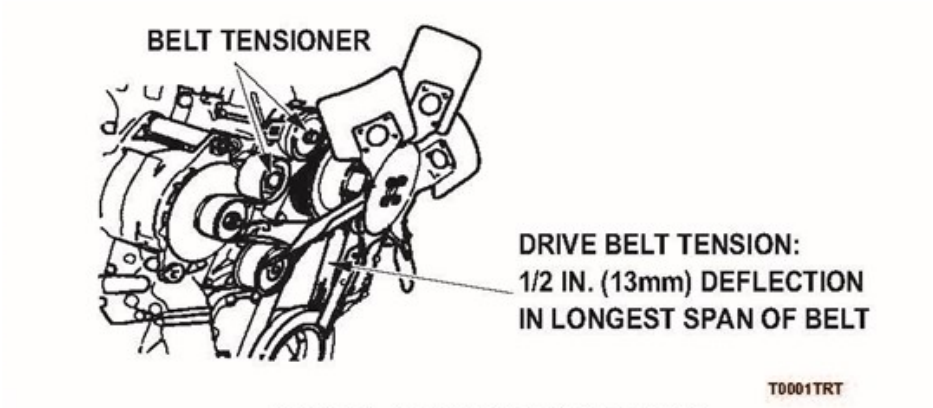

Figure 1. Alternator Belt Assembly.

2. Check belt tension and replace if required (WP 0095).
3. Check belt tension operation and replace belt tensioner if required (WP 0095).

MALFUNCTION

Alternator pulley loose

CORRECTIVE ACTION

1. Check for loose alternator pulley on shaft.
2. Check pulley nut torque.
3. Torque to 80 to 80 ft-lb (95 to 108 N-m) on 152 hp engines if necessary (WP 0096).
4. Torque to 75 ft-lb (102 N-m) on 165 hp engines if necessary (WP 0097).

END OF WORK PACKAGE

FIGURE D-6. Example of content for a troubleshooting procedure (Method B) - Continued.

Source: https://assist.dla.mil -- Downloaded: 2016-12-09T23:24Z
Check the source to verify that this is the current version before use.

23. **SIGNAL NAME:** DASEC STATUSWORD DC ANALOG OUTPUT BIT
MEMORY LOCATION: 002150
MEMORY DATA BIT(S): 15 (BINARY)
CONDITION: (None)
SIGNAL FUNCTION: Indicates status of DC analog circuits.
REMARKS: From DASEC to FCC.
PASS: If second digit displayed on HOD is 3 or 7, go to Step 24.
FAIL: Location of fault: replace DASEC (TM 1-1520-238-23 Series).

24. **SIGNAL NAME:** DASEC STATUSWORD AD/DA BIT
MEMORY LOCATION: 002150
MEMORY DATA BIT(S): 13 (BINARY)
CONDITION: (None)
SIGNAL FUNCTION: Indicates status of analog-to-digital and digital-to-analog circuits.
REMARKS: From DASEC to FCC.
PASS: If third digit displayed on HOD is 1, 3, 5, or 7, go to Step 25.
FAIL: Location of fault: replace DASEC (TM 1-1520-238-23 Series).

25. **SIGNAL NAME:** DASEC STATUSWORD FD/LS TEST
MEMORY LOCATION: 002150
MEMORY DATA BIT(S): 12 (BINARY)
CONDITION: (None)
SIGNAL FUNCTION: Indicates FD/LS ground test is being run.
REMARKS: From DASEC to FCC.
PASS: If third digit displayed on HOD is 1 or 5, go to Step 26.
FAIL: Location of fault: replace DASEC (TM 1-1520-238-23 Series).

26. **SIGNAL NAME:** DASEC STATUSWORD ASE BIT
MEMORY LOCATION: 002150
MEMORY DATA BIT(S): 11 (BINARY)
CONDITION: (None)
SIGNAL FUNCTION: Indicates last FD/LS test ASE bit status.
REMARKS: DASEC to FCC.
PASS: If third digit displayed on HOD is 1, go to Step 27.
FAIL: Location of fault: replace DASEC (TM 1-1520-238-23 Series).

27. **SIGNAL NAME:** DASEC STATUSWORD VD TEST
MEMORY LOCATION: 002150
MEMORY DATA BIT(S): 10 (BINARY)
CONDITION: (None)
SIGNAL FUNCTION: Indicates last FD/LS test VD bit status.
REMARKS: DASEC to FCC.
PASS: If third digit displayed on HOD is 3 or 4, go to Step 28.
FAIL: Location of fault: replace DASEC (TM 1-1520-238-23 Series).

FIGURE D-7. Example of content for a troubleshooting procedure (Method C).

Source: https://assist.dla.mil -- Downloaded: 2016-12-09T23:24Z
Check the source to verify that this is the current version before use.

TM X-XXXX-XXX-XX 0481

MAINTAINER TROUBLESHOOTING
COMPUTER PROCESSOR
OPERATIONAL CHECKOUT AND TRUBLESHOOTING

INITIAL SETUP:

Test Equipment
Test set (WP 0654, Item 4)

References
WP 0539

COMPUTER PROCESSOR - TEST PROCEDURE

CHECK STEP
1. Remove computer processor top cover (WP 0005).
2. Apply power to test set and place test set **POWER** switch to **ON** position.

CONDITION/INDICATION
Test set power indicator is illuminated.

MALFUNCTION/CORRECTIVE ACTION
If power indicator does not light, check power source for 28 VDC.

CHECK STEP
3. Place **UUT POWER** switch in **CP** position.

CONDITION/INDICATION
CP LEDS momentarily flash.

MALFUNCTION/CORRECTIVE ACTION
If LEDS do not flash briefly, check test set wiring.

CHECK STEP
4. Place Test Set **UUT POWER** switch in **CP** position. Quickly press and release the **CP BIT** button on the system interface card. Observe the 10 LEDs on the system I/F CCA.

CONDITION/INDICATION
BIT test routine runs for 30 seconds. During the first 15 seconds the CP LEDs (DS1- DS10) will flash. The second 15 second period is the status reporting period. All LEDs are **OFF** during the second 15 second period. After the BIT routine is complete, all LEDs will return to the original **OFF** state.

MALFUNCTION/CORRECTIVE ACTION
a. If DS1 is illuminated, perform **DS1** testing. Refer to Table 2.
b. If **DS2** is illuminated, perform **DS2** testing. Refer to Table 3.

0481-1

FIGURE D-8. Example of content for a combination testing and troubleshooting procedure.

Source: https://assist.dla.mil -- Downloaded: 2016-12-09T23:24Z
Check the source to verify that this is the current version before use.

APPENDIX E
MAINTENANCE INSTRUCTIONS

E.1 SCOPE.

E.1.1 Scope. This appendix establishes the technical content requirements for the preparation of maintenance procedures for major weapon systems and their related systems, subsystems, equipment, assemblies, components, SRUs, and LRUs. This appendix is a mandatory part of this standard. The information contained herein is intended for compliance. The requirements are applicable for all maintenance levels/classes through overhaul (depot), including DMWRs and NMWRs.

E.2 APPLICABLE DOCUMENTS.

The applicable documents in section 2 apply to this appendix.

E.3 DEFINITIONS.

The definitions in section 3 apply to this appendix.

E.4 GENERAL REQUIREMENTS.

E.4.1 General. Maintenance tasks shall be prepared for major weapon systems, equipment, components, and applicable support and interface equipment. They shall be prepared for all items comprising the weapon system/equipment: such as assemblies, subassemblies, components, wiring, junction boxes, and accessories. Maintenance tasks and supporting illustrations shall be prepared so that maintenance personnel can perform all required maintenance.

E.4.2 Development of maintenance tasks. Tasks shall be presented in the order in which they are performed. Sound engineering principles and techniques, approved LPD, service experience, performance data on similar equipment, and all other RMS and Ao data available shall be used in the preparation of specific maintenance tasks.

E.4.3 Maintenance level/class applicability. Requirements contained in this appendix are applicable to all maintenance levels/classes unless specifically labeled in bold and in parentheses. The labeled requirement may specify a specific level (e.g., **Field**) or a specific maintenance class (refer to 3.89) (e.g., **Maintainer** or **AMC**). The labeled requirement shall be applicable to all TMs containing that maintenance level/class. An explanation of applicable DA maintenance levels/classes is provided in section 3.

E.4.4 Depot Maintenance Work Requirements (DMWRs) and National Maintenance Work Requirements (NMWRs). When the acquiring activity specifies that a DMWR or NMWR shall be prepared to the best commercial practices, the depot requirements contained in this standard shall be used only as a guide; therefore, the maintenance tasks in the DTD (refer to E.4.6) cannot be used.

Source: https://assist.dla.mil -- Downloaded: 2016-12-09T23:24Z
Check the source to verify that this is the current version before use.

E.4.5 Preparation of digital data for electronic delivery. Data prepared and delivered digitally in accordance with this standard shall be XML tagged using the current Army DTD. Data shall be formatted for presentation using the Army style sheets. Refer to 4.6 for information on obtaining or accessing the Army DTD and style sheets. XML tags used in the DTD are noted throughout the text of this standard in bracketed, bold characters (e.g., **<descwp>**) as a convenience for the author and to ensure that the tags are used correctly when developing a document instance.

E.4.6 Use of the Document Type Definition (DTD)/style sheet. The DTD referenced in this appendix interprets the technical content and structure for the functional requirements contained in this standard. Development of the page-based TMs shall be accomplished through the use of this standard, the Army DTD, and the Army style sheets. MIL-HDBK-1222 provides further guidance and preferred style and format. The guidance in MIL-HDBK-1222 shall be followed unless it conflicts with the requirements in this standard.

E.4.7 Content structure. The examples provided herein are an accurate representation of the content structure requirements contained in this appendix and shall be followed to permit the effective use of the DTD.

E.4.8 Style and format. This standard provides style and format requirements for the technical content requirements described in this appendix. These requirements are considered mandatory and are intended for compliance.

E.4.9 Work package development. Data developed in accordance with this appendix shall be divided into work packages. These work packages should be stand alone and are broken into the following work package types: PMCS Introduction, PMCS, Service upon receipt, maintenance, general maintenance, lubrication instructions, illustrated list of manufactured items, torque limits, wiring diagrams, equipment/user fitting instructions, facilities, overhaul inspection procedures, depot mobilization requirements, quality assurance requirements, aircraft inventory master guide, storage of aircraft, overhaul and retirement schedule, weighing and loading, auxiliary equipment maintenance, ammunition maintenance, ammunition marking information, and foreign ammunition. A work package shall contain all information and references required to support the work package type.

E.4.10 Safety devices and interlocks. Information shall be prepared pertaining to the purpose and location of all safety devices and interlocks in conjunction with the pertinent procedures.

E.4.11 Electrostatic discharge (ESD) sensitive parts. If the equipment contains ESD sensitive parts, components, or circuits, cautions and ESD labels shall be incorporated into the applicable tasks and procedures to ensure ESD sensitive parts are not damaged or degraded during maintenance and operation. (Refer to 4.7.20 for requirements on labeling with ESD.) Actions which could damage ESD sensitive parts, but which are not directly related to handling or operation of ESD sensitive parts, shall not be annotated with the ESD acronym, but shall be preceded by a caution statement.

Source: https://assist.dla.mil -- Downloaded: 2016-12-09T23:24Z
Check the source to verify that this is the current version before use.

E.4.12 Nuclear hardness. If the weapon system/equipment has nuclear survivability requirements (for example, over pressure and burst, thermal radiation, electromagnetic pulse, or transient radiation effects on electronics), cautions and HCP labels shall be incorporated into the applicable tasks and procedures to ensure the hardness of the equipment is not degraded during handling or operation. (Refer to 4.7.19 for requirements on labeling with HCP.) Actions which could degrade hardness, but which are not directly involved in establishing nuclear hardness, shall not be annotated with the acronym, but shall be preceded by a caution statement.

E.4.13 Selective application and tailoring of content using Appendix A matrixes. This standard contains some requirements that may not be applicable to the preparation of all TMs. Selective application and tailoring of requirements contained in this appendix are the responsibility of the acquiring activity and shall be accomplished using APPENDIX A. The applicability of some requirements is also designated by one of the following statements: unless specified otherwise by the acquiring activity; as specified by the acquiring activity; or when specified by the acquiring activity.

E.5 **DETAILED REQUIREMENTS.**

E.5.1 Preparation of maintenance tasks. Maintenance tasks shall be prepared to enable a technician to perform maintenance on the weapons system/equipment and associated assemblies, components, SRUs, and LRUs. Tasks will be developed to allow the appropriate maintainer to bring the asset to a mission capable status. Maintenance tasks shall be developed in accordance with the LPD, Maintenance Allocation Chart (MAC), and the SMR codes developed for the weapon system/equipment and components. Maintenance work packages shall be arranged to coincide with the FGC or top-down breakdown sequence followed in the MAC and RPSTL.

E.5.2 Types of maintenance. Depending on the type and complexity of the weapon system/equipment, the TM, DMWR, or NMWR shall contain one or more of the following maintenance categories.

E.5.2.1 Preventive Maintenance Checks and Services (PMCS) (**except for aircraft TMs, DMWRs, and NMWRs**) **<pmcscategory>**. This maintenance category contains only the PMCS requirements and shall be used only when PMCS will be in a separate chapter by itself and the remaining maintenance work packages will be in separate chapter(s). The PMCS category contains the following work packages in the order specified:

a. PMCS Introduction work package **<pmcsintrowp>** (refer to E.5.3.4.1).

b. PMCS work package **<pmcswp>** (refer to E.5.3.4.2).

E.5.2.2 Weapon system/equipment maintenance with required Preventive Maintenance Checks and Services (PMCS) (**except for aircraft TMs, DMWRs, and NMWRs**) **<maintenancepmcscategory>**. This maintenance category shall be used when PMCS is combined with other maintenance work packages in a single chapter. Unless otherwise indicated, this maintenance category contains the following work packages in the order specified:

a. Service upon receipt work package **(Maintainer only) <surwp>** (refer to E.5.3.2).

b. Equipment/User fitting Instruction work package **<perseqpwp>** (refer to E.5.3.3).

c. PMCS introduction work package **<pmcsintrowp>** (refer to E.5.3.4.1).

d. PMCS work package **<pmcswp>** (refer to E.5.3.4.2).

Source: https://assist.dla.mil -- Downloaded: 2016-12-09T23:24Z
Check the source to verify that this is the current version before use.

e. The following work packages occur in no specific order:
   (1) Maintenance work package **<maintwp>** (refer to E.5.3.5).
   (2) General maintenance work package **<gen.maintwp>** (refer to E.5.3.7).
   (3) Lubrication instructions work package **<lubewp>** (refer to E.5.3.8).
f. Illustrated list of manufactured items work package **(Maintainer level and above)** (refer to E.5.3.10).
g. Torque limits work package **(Maintainer level and above) <torquewp>** (refer to E.5.3.11).
h. Wiring diagrams work package **(Maintainer level and above) <wiringwp>** (refer to E.5.3.12).

E.5.2.3 Weapon system/equipment maintenance without Preventive Maintenance Checks and Services (PMCS) (**except for aircraft TMs, DMWRs, and NMWRs**) **<maintenancecategory>**. This maintenance category shall be used for maintenance chapters which do not contain PMCS. In addition to this maintenance category, either the PMCS or maintenance with PMCS category shall also be developed. Unless otherwise specified by the acquiring activity, this maintenance category contains the following work packages in the order specified:

a. Service upon receipt work package **(Maintainer level only) <surwp>** (refer to E.5.3.2).
b. Equipment/User fitting instruction work package **<perseqpwp>** (refer to E.5.3.3).
c. The following work packages occur in no specific order:
   (1) Maintenance work package **<maintwp>** (refer to E.5.3.5).
   (2) General maintenance work package **<gen.maintwp>** (refer to E.5.3.7).
   (3) Lubrication instructions work package **<lubewp>** (refer to E.5.3.8).
d. Illustrated list of manufactured items work package **(Maintainer level and above)** (refer to E.5.3.10).
e. Torque limits work package **(Maintainer level and above) <torquewp>** (refer to E.5.3.11).
f. Wiring diagrams work package **(Maintainer level and above) <wiringwp>** (refer to E.5.3.12).

E.5.2.4 Depot weapon system/equipment maintenance **<depotcategory>**. Unless otherwise specified, the depot maintenance category contains the following work packages in the order specified:

a. Preservation, packaging, and marking general information work package **<ppmgeninfowp>** (refer to E.5.3.9.1).
b. Equipment/User Fitting Instruction work package **<perseqpwp>** (refer to E.5.3.3).
c. The following work packages occur in no specific order:
   (1) Maintenance work package **<maintwp>** (refer to E.5.3.5).
   (2) General maintenance work package **<gen.maintwp>** (refer to E.5.3.7).
   (3) Lubrication instructions work package **<lubewp>** (refer to E.5.3.8).

Source: https://assist.dla.mil -- Downloaded: 2016-12-09T23:24Z
Check the source to verify that this is the current version before use.

d. Facilities work package **<facilwp>** (refer to E.5.3.9.2).

e. Overhaul inspection procedures (OIPs) work package **<oipwp>** (refer to E.5.3.9.3).

f. Depot mobilization requirements work package **<mobilwp>** (refer to E.5.3.9.4).

g. Quality Assurance (QA) requirements work package **<qawp>** (refer to E.5.3.9.5).

h. Illustrated list of manufactured items (refer to E.5.3.10).

i. Torque limits work package **<torquewp>** (refer to E.5.3.11).

j. The following work packages are for **aircraft only**:

(1) Aircraft inventory master Guide work package **<inventorywp>** (refer to E.5.3.13.2).

(2) Storage of aircraft work package **<storagewp>** (refer to E.5.3.13.3).

k. Wiring diagrams work package **<wiringwp>** (refer to E.5.3.12).

E.5.2.5 Aircraft maintenance **(aircraft TMs, DMWRs, and NMWRs only) <aviationcategory>**. Unless otherwise indicated, this maintenance category contains the following work packages in the order specified:

a. Preservation, packaging, and marking general information work package **<ppmgeninfowp>** (refer to E.5.3.9.1).

b. Service upon receipt work package **(AMC only) <surwp>** (refer to E.5.3.2).

c. Equipment/User fitting instruction work package **<perseqpwp>** (refer to E.5.3.3).

d. The following work packages occur in no specific order:

(1) Maintenance work package **<maintwp>** (refer to E.5.3.5).

(2) General maintenance work package **<gen.maintwp>** (refer to E.5.3.7).

(3) Lubrication instructions work package **<lubewp>** (refer to E.5.3.8).

(4) Preventive maintenance inspections work package **<pmiwp>** (refer to E.5.3.13.1).

e. Overhaul and retirement schedule work package **<orschwp>** (refer to E.5.3.6).

f. Illustrated list of manufactured items (refer to E.5.3.10).

g. Torque limits work package **<torquewp>** (refer to E.5.3.11).

h. Aircraft inventory master Guide work package **<inventorywp>** (refer to E.5.3.13.2).

i. Storage of aircraft work package **<storagewp>** (refer to E.5.3.13.3).

j. Weighing and loading work package **(ASB only) <wtloadwp>** (refer to E.5.3.13.4).

k. Wiring diagrams work package **<wiringwp>** (refer to E.5.3.12).

E.5.2.6 Auxiliary equipment maintenance **<auxiliarycategory>**. This maintenance category contains the following work packages in the order specified:

a. Auxiliary equipment maintenance work package **<auxeqwp>** (refer to E.5.3.14).

b. Illustrated list of manufactured items work package **(Maintainer/AMC and above)** (refer to E.5.3.10).

c. Torque limits work package **(Maintainer/AMC and above) <torquewp>** (refer to E.5.3.11).

Source: https://assist.dla.mil -- Downloaded: 2016-12-09T23:24Z
Check the source to verify that this is the current version before use.

d. Wiring diagrams work package **(Maintainer/AMC and above)** **<wiringwp>** (refer to E.5.3.12).

E.5.2.7 Ammunition maintenance **<ammunitioncategory>**. This maintenance category contains the following work packages in the order specified:

a. Service upon receipt work package (**Maintainer level only**) **<surwp>** (refer to E.5.3.2).

b. The following work packages occur in no specific order:

(1) Ammunition maintenance work package **<ammowp>** (refer to E.5.3.15.1).

(2) Ammunition marking information work package **<ammo.markingwp>** (refer to E.5.3.15.2).

(3) Foreign ammunition (NATO) work package **<natowp>** (refer to E.5.3.15.3).

E.5.2.8 Test and inspection maintenance **(Ammunition only)** **<testinspectioncategory>**. This maintenance category contains the Maintenance work package **<maintwp>.** (Refer to E.5.3.5.)

E.5.2.9 Shipment/movement and storage maintenance **(Ammunition only)** **<shipmentmovementstoragecategory>**. This maintenance category contains the Maintenance work package **<maintwp>.** (Refer to E.5.3.5.)

E.5.2.10 Ammunition marking maintenance **(Ammunition only)** **<ammomarkingcategory>**. This maintenance category contains the Ammunition Marking Information work package **<ammo.markingwp>.** (Refer to E.5.3.15.2.)

E.5.2.11 Preventive maintenance services **(Aircraft preventive maintenance services only)** **<pmscategory>**. This maintenance category contains the Preventive Maintenance Services Inspection work packages **<pms-inspecwp>.** (Refer to E.5.3.16.)

E.5.2.12 Phased maintenance inspections **(Aircraft phased maintenance inspection only)** **<checklistcategory>**. This maintenance category contains the Phased Maintenance Inspection work packages **<pmi-cklistwp>.** (Refer to E.5.3.17.)

E.5.2.13 Software maintenance **<softmaintcategory>**. This maintenance category contains the Maintenance work package **<maintwp>.** (Refer to E.5.3.5.)

E.5.2.14 General maintenance **<genmaintcategory>**. This maintenance category contains the Maintenance work package **<maintwp>** (Refer to E.5.3.5) and the General Maintenance work package **<gen.maintwp>** (Refer to E.5.3.7.)

E.5.3 Maintenance work packages. Individual maintenance work packages shall be developed for the overall weapon system/equipment and each maintainable system, subsystem, assembly, component, SRU, and LRU for each applicable maintenance level as indicated in the approved MAC.

E.5.3.1 Work package content. Work packages shall contain one or more maintenance tasks. Work packages shall stand alone and contain complete start-to-finish maintenance tasks to the maximum extent possible.

Source: https://assist.dla.mil -- Downloaded: 2016-12-09T23:24Z
Check the source to verify that this is the current version before use.

a. Grouping tasks. Multiple tasks shall only be grouped into one work package if all the tasks have the same initial setup and all the items in initial setup apply to all the tasks that are being grouped together. Tasks shall not be grouped if condition-based maintenance applies. A task shall not be grouped with other tasks if it will be referenced by other tasks. Liberal use of references between work packages is encouraged.

b. Follow-on maintenance tasks. Any follow-on maintenance that must be performed after maintenance procedures are completed shall be included or referenced (e.g., disconnect external power, perform operational checks, etc.). When the follow-on maintenance is extensive, it shall be contained in a separate work package and a reference shall be made to the applicable work package.

c. End of the work package statement. The words "END OF WORK PACKAGE" shall be placed below the last data item (e.g., text, illustration, etc.) of the work package containing the maintenance procedure(s).

The maintenance work packages described in E.5.3.2 through E.5.3.17 shall be prepared, as applicable. Refer to MIL-HDBK-1222 for examples of work package identification information format.

E.5.3.2 Service upon receipt work package **<surwp>**. One or more service upon receipt work packages **<surwp>** shall be prepared. Each **<surwp>** shall contain a single service upon receipt task **<surtsk>**. (Refer to E.5.3.2.3.) The service upon receipt work packages shall contain information required for the user to ensure that the equipment will be adequately inspected, serviced, and operationally tested before it is subjected to use. **TEXT DELETED**

E.5.3.2.1 Work package identification information **<wpidinfo>**. Work package identification information is required for this work package. (Refer to 4.7.9.3.)

E.5.3.2.2 Work package initial setup **<initial_setup>**. Initial setup is required for this work package. (Refer to 4.7.9.4.)

E.5.3.2.3 Service upon receipt tasks **<surtsk>**. For equipment that requires extensive service upon receipt, the following tasks described in E.5.3.2.3.1 through E.5.3.2.3.11 shall be prepared and shall be placed in individual work packages. Instructions for munitions service upon receipt are contained in E.5.3.2.3.9. If these tasks reside in an existing work package/manual, reference may made to them.

E.5.3.2.3.1 Siting **<siting>**. Siting instructions peculiar to the equipment shall be prepared, as applicable. In preparing the instructions, operational and maintenance features shall be considered, such as the following:

a. Location.
b. Proximity to power sources.
c. Effective ranges.
d. Terrain requirements to avoid screening, reflections, ground clutter, and other poor operational conditions due to terrain.
e. Technical requirements.
f. Shelter locations.
g. Compensation for adverse siting conditions.

Source: https://assist.dla.mil -- Downloaded: 2016-12-09T23:24Z
Check the source to verify that this is the current version before use.

h. When the equipment contains large components such as towers and antennas that require orientation to a baseline during siting.

i. Orientation of mobile equipment during installation.

E.5.3.2.3.2 Shelter requirements **<shltr>**. When equipment is normally housed in a permanent or semi-permanent shelter (other than a military truck, van, or transportable shelter) during use, the following information shall be prepared:

a. Amount of floor, wall, and height space required.

b. A plan for a typical layout.

c. Required weight capacity of the building floor.

d. Dimensions required for installed equipment.

e. Total weights that the floor must support and the area in square feet over which the total weight will be distributed.

f. Environmental conditions (e.g., venting).

g. Power requirements.

h. Unusual requirements specific to equipment, such as air conditioning.

i. Architectural and engineering data on beam sizes, lengths, bending moments, and required supports shall not be included.

E.5.3.2.3.3 Service upon receipt of materiel **<surmat>**. The following instructions shall be prepared as specified in E.5.3.2 and E.5.3.2.3.

E.5.3.2.3.3.1 Unpacking **<unpack>**. Instructions for unpacking materiel or equipment shall be prepared. (Refer to E.5.3.5.3.18.)

E.5.3.2.3.3.2 Checking unpacked equipment **<chkeqp>**. Instructions shall be prepared for a condition check of the shipment (including that of pallets, containers, boxes, and legibility of markings). These instructions may be contained in a table (**standard information per paragraph 4.7.13.7**). The following data shall be included:

E.5.3.2.3.3.2.1 Packaging material **<crit.insp.tab>**. For each item **<eqpitem>** of a component requiring inspection, the following conditions shall be provided: acceptable **<accept>**, reparable **<repairable>**, and nonreparable **<nonrepairable>**. (Refer to FIGURE E-1).

E.5.3.2.3.3.2.2 Equipment components **<pecul.insp.tab>**. A table shall be provided that lists, by location **<location>**, each item **<eqpitem>** of a component **<compntassem>** requiring inspection. For each of these items, an inspection action **<step1>** shall be provided and, if applicable, a reference **<remarks>** shall be made to another work package. (Refer to FIGURE E-1.)

In addition, the following shall be inserted:

> "Inspect the equipment for damage incurred during shipment. If the equipment has been damaged, report the damage on DD Form 361, Transportation Discrepancy Report.
>
> Check the equipment against the packing slip to see if the shipment is complete. Report all discrepancies in accordance with DTR 4500.9-R, Part II.
>
> Check to see whether the equipment has been modified."

Source: https://assist.dla.mil -- Downloaded: 2016-12-09T23:24Z
Check the source to verify that this is the current version before use.

E.5.3.2.3.3.3 Processing unpacked equipment **<processeqp>**. Instructions shall be prepared for processing the unpacked equipment (e.g., removing excess lubricant from a new rifle), as long as they do not conflict with any warranty provisions. The following information shall be prepared, as applicable:

a. Any special skills required by processing personnel.
b. All caustic, corrosive, and/or toxic material used during processing shall be identified and applicable warnings and cautions given.
c. Instructions on safe disposal of waste products generated during processing actions.
d. Man-hour requirements and total man-hours required for processing the equipment.

E.5.3.2.3.4 Installation instructions **<install>**. Instructions shall be prepared to install the equipment properly. These instructions shall include which tools are to be used to make the necessary interconnections, to lubricate, calibrate, and adjust the equipment. Instructions for cabling and wiring shall include the following:

a. Cable diagrams shall be included or referenced as necessary. When cable assemblies are not supplied but are required for bench test setup, instructions shall be prepared in the manufactured items work package (refer to E.5.3.10) for fabricating interconnecting cable assemblies.
   (1) Instructions shall be prepared for any mating connectors that call for a special procedure either to make the proper connection or to prevent damage to the connector. Warnings and cautions shall be included where necessary.
   (2) A wiring diagram shall be prepared which fully identifies, by either color code or wire number (if applicable), each wire to be connected. This diagram shall show the location of each pertinent terminal. The terminal(s) shall be identified by number or other marking, if available, or by position if neither is available. Where appropriate, voltage readings shall be annotated.
   (3) All alternate connection patterns required for various modes of operation shall be shown and explained.
   (4) Only one diagram shall be used to illustrate interconnection patterns that appear more than once within the same equipment.
b. For installation of plug-in items, diagrams shall be prepared or referenced showing the location of items that are not installed in the equipment when received. Instructions shall be prepared whenever special techniques or connections are required.

E.5.3.2.3.4.1 Installation of the equipment.

a. Installation instructions shall be prepared for all the following actions (including placing, mounting, and attaching):
   (1) Cable and wiring interconnections.
   (2) Proper use of special tools.
b. Installation instructions shall identify all dimensions that must be maintained in placing, mounting, or attaching items.
c. When initial adjustments can be made efficiently during installation, such adjustments shall be included.

Source: https://assist.dla.mil -- Downloaded: 2016-12-09T23:24Z
Check the source to verify that this is the current version before use.

d. For equipment designed and intended for use in more than one type of installation (e.g., field, fixed station, and mobile), instructions shall be prepared for each type of installation involved.

e. Performance of any step in the installation instructions that requires the assistance of personnel from a higher level of maintenance shall be detailed. This shall be stated in a note similar to that in the following (italicized text within parentheses shall be replaced with the appropriate information):

"**NOTE**

The following installation procedure must be made with the assistance of (*insert level*) maintenance personnel (include Military Occupational Specialty, if applicable)."

f. Installation instructions shall include instructions for (as applicable):
   (1) All required installation options (e.g., ESD control requirements).
   (2) Accessory items.
   (3) Auxiliary items (those that extend or increase equipment capability).
   (4) Grounding of the equipment for both safety and proper operation.
   (5) Torque requirements.

E.5.3.2.3.4.2 Special applications. Installation instructions which are common to all special applications of a system, shall be prepared. Details resulting from the installation shall be omitted if they are specific only to the equipment into which the system is being installed (e.g., special treatment required when the system is installed in a vehicle or aircraft).

E.5.3.2.3.4.3 Van and shelter installations. When the equipment is permanently installed in vans or shelters, installations instructions will not need to be prepared. The following information shall be prepared only to the extent required for the applicable level of maintenance:

a. Instructions shall be prepared for the removal and replacement of each nonpermanent unit.

b. Diagrams and instructions shall be prepared which pertain to electrical and interconnection wiring exclusive of wiring specific to the equipment on which the installation is being made (e.g., headlight, ignition wiring).

c. Instructions shall be prepared for cable run locations, equipment locations, circuit breaker panels, and other similar details.

E.5.3.2.3.4.4 Assembly of equipment **<assem>**.

a. Instructions shall be prepared for assembling equipment that has been shipped unassembled. When the equipment is to be shelf or rack mounted, instructions shall also be prepared for assembly of the rack, if necessary, and for installation of the equipment in the rack. As applicable, power requirements, connections, and initial control settings needed for installation purposes shall be included.

b. When the equipment is shipped or delivered in specially designed containers, unpacking instructions shall be prepared as detailed in E.5.3.2.3.3.1.

Source: https://assist.dla.mil -- Downloaded: 2016-12-09T23:24Z
Check the source to verify that this is the current version before use.

c. For security measures for electronic data, instructions shall be prepared for handling, loading, purging, overwriting, or unloading classified electronic data under usual conditions. Instructions shall meet current security regulations as they pertain to automation security.

E.5.3.2.3.5 Preliminary servicing of equipment **<preserv>**. Instructions shall be prepared for all preliminary services required on newly installed equipment. This should include but not be limited to the following: lubrication, wiring, and fueling, etc.

E.5.3.2.3.6 Preliminary checks and adjustment of equipment **<prechkadj>**. Instructions shall be prepared for all checks and adjustments to be made on newly installed equipment. Information on the location of items such as controls and check points shall be prepared or referenced. Instructions shall be prepared for checks and adjustments that must be made before the equipment is put into operation and for all other checks required to ensure proper operation of the equipment. These instructions shall include but not be limited to the following (as applicable):

a. Checks for interconnections.
b. Checks for grounding, including earth ground connections, earth conditioning for conduction, as well as a check of the grounding circuit for negligible resistance.
c. Checks for adequate clearance for rotating or moving devices.
d. Checks of initial settings of all controls that must be preset before power is to be applied.
e. All other checks needed to determine that power can be applied without injuring personnel or damaging the equipment.
f. Firm seating and connection of all plug-in parts, mating connectors, jacks, and plugs.
g. Cable and wire harness routing, dressing, and fastening.
h. ESD control standards and cautions against damaging transistors, diodes, and other electrically sensitive items.
i. Replacement of all covers, inspection and access doors, and plates.
j. Operation of safety interlocks and switches.
k. Operation of ventilating louvers and intake and exhaust ports.
l. Operation and content of liquid cooling systems.
m. Lubricants and Corrosion Prevention Control (CPC) procedures.
n. Switch and control settings that are preset at installation (installer's adjustments).
o. Presetting and adjustment of automatic controls.
p. Terminal connections.
q. Required terminal or capacitor strapping.
r. Preliminary test measurements.
s. Presetting operator controls.
t. Normal operating checks.
u. After-installation orientation.
v. Burn-in of parts.
w. After-operations shutdown, checks, and inspections.

Source: https://assist.dla.mil -- Downloaded: 2016-12-09T23:24Z
Check the source to verify that this is the current version before use.

E.5.3.2.3.7 Preliminary calibration of equipment **<precal>**. Instructions shall be prepared for all calibration to be made on newly installed equipment.

E.5.3.2.3.8 Circuit alignment **<calign>**. Instructions shall be prepared for circuit alignment procedures. Applicable instructions shall be prepared in the following order.

E.5.3.2.3.8.1 External connections **<extconn>**. Connections to external lines that are required for each installation option shall be included. Connection instructions shall conform to the requirements for installing wiring and cabling interconnections.

E.5.3.2.3.8.2 Switch settings, patch panel connections, and internal control settings. **<setconn>**. Instructions shall be prepared for all switch settings, patch panel connections, and internal control settings required for each installation option and mode of operation.

E.5.3.2.3.8.3 Alignment procedures **<alignproc>**. Instructions shall be prepared for all alignment procedures, including any variations required for different installation options and modes of operation.

E.5.3.2.3.9 Ammunition service upon receipt tasks. Procedures shall be prepared for performing the following tasks as described in E.5.3.2.3.9.1 through E.5.3.2.3.9.4. Procedures shall include inspections to verify that ammunition received was requisitioned. Instructions shall be prepared to record the quantity of ammunition for recordkeeping purposes. In addition the following shall be inserted in to the TM verbatim:

> "If the markings on packaging conflict with nomenclature of item requisitioned, check with supply personnel to determine if an error has been made.
>
> Specific inspection criteria and identification of defects are outlined in the Inspection of Ammunition WP and the Inspection of Packaging WP."

E.5.3.2.3.9.1 Ammunition markings **<mark>**. Instructions shall be prepared for marking ammunition and ammunition containers. (Refer to E.5.3.5.3.16.)

E.5.3.2.3.9.2 Classification of defects **<ammo.defect>**. Procedures shall be prepared for identifying defects in munitions. (Refer to E.5.3.15.1.3.2.)

E.5.3.2.3.9.3 Handling **<ammo.handling>**. Procedures shall be prepared for handling ammunition. (Refer to E.5.3.15.1.3.3.)

E.5.3.2.3.9.4 Procedures needed to activate ammunition, mines, etc. **<arm>**. Procedures shall be prepared for the activation of ammunition, mines, etc., in preparation of functioning or use of training devices.

E.5.3.2.3.10 Other service upon receipt tasks **<other.surtsk>**. Additional service upon receipt tasks may be developed when the specific type of service upon receipt tasks are not covered as described in E.5.3.2.3.1 through E.5.3.2.3.9.4. If additional service upon receipt tasks are used, the proponent shall submit to LOGSA the requirements for this service upon receipt task type for possible incorporation within future revisions to this standard.

Source: https://assist.dla.mil -- Downloaded: 2016-12-09T23:24Z
Check the source to verify that this is the current version before use.

E.5.3.2.3.11 Follow-on maintenance **<followon.maintsk>**. As applicable, instructions shall be prepared or references to the applicable work package(s) for any follow-on maintenance required and shall be the last information in the work package. Follow-on is a maintenance condition which must be accomplished following the completion of a task to clean up or undo actions performed during the task. For example, in order to fix a component a task might require that an access panel be removed. The panel would then need to be replaced as a follow-on action. This task might be performed sometime after the repair task is completed but not immediately after the repair task. Other maintenance tasks might be performed in the same area before the follow-on task is accomplished.

E.5.3.3 Equipment/user fitting instructions work package **<perseqpwp>**. As applicable, equipment/user fitting instructions for personal use equipment shall be prepared.

E.5.3.3.1 Work package identification **<wpidinfo>**. Work package identification information is required for this work package. (Refer to 4.7.9.3.)

E.5.3.3.2 Work package initial setup **<initial_setup>**. Initial setup is required for this work package. (Refer to 4.7.9.4.)

E.5.3.4 Preventive Maintenance Checks and Services (PMCS) (**except for aircraft TMs, DMWRs, and NMWRs**). The PMCS shall be prepared for operator manuals and as required for other maintenance levels. PMCS shall be based upon the principles of Reliability Centered Maintenance (RCM) logic. It shall include PMCS information and applicable scheduled corrosion inspections. Lubrication instructions may be included in the PMCS information or a separate lubrication order may be prepared. (Refer to APPENDIX K). An introduction work package for PMCS shall also be prepared.

E.5.3.4.1 Preventive Maintenance Checks and Services (PMCS) introduction work package **<pmcsintrowp>**. This work package shall explain the purpose and use of the PMCS data. The PMCS introduction work package shall not contain any maintenance tasks. The PMCS introduction work package may contain reference/links to the PMCS data by interval but shall not contain reference/links to any other maintenance tasks.

E.5.3.4.1.1 Work package identification information **<wpidinfo>**. Work package identification information is required for this work package. (Refer to 4.7.9.3.)

E.5.3.4.1.2 Work package initial setup **<initial_setup>**. Initial setup is not required for this work package.

E.5.3.4.1.3 Preventive Maintenance Checks and Services (PMCS) data.

a. An explanation shall be prepared for each PMCS entry. The explanation for the item numbers shall detail how the item numbers are used when recording results of PMCS on DA Form 2404, Equipment Inspection and Maintenance Worksheet.
b. If lubrication instructions are included in the PMCS data, the requirements contained in APPENDIX K shall be used. Only lubrication information such as intervals, lubricant types, etc. shall be included in the introduction. Lubrication procedures shall be included in the PMCS work package. No lubrication procedures shall be contained in the PMCS introduction work package.

Source: https://assist.dla.mil -- Downloaded: 2016-12-09T23:24Z
Check the source to verify that this is the current version before use.

c. Information concerning CPC shall be prepared. This information shall contain a reference to the CPC information in the general information work package. In addition this information shall contain inspection requirements for corrosion. When items are determined to be not ready or available as a result of one (or more) forms of corrosion being present, these items shall be recorded as corrosion failures in the inspection record and the appropriate code as given in DA PAM 750-8 or DA PAM 738-751 will be used when requesting/performing maintenance activities. In addition, if the inclusion of such instructions is applicable, a statement shall be prepared which states that the instructions are mandatory.

d. When the equipment contains fluids, such as lubrication oil or hydraulic fluid, leakage criteria shall be prepared for the PMCS introduction as follows and referred to in the NOT MISSION CAPABLE IF: column (italicized text within parentheses shall be replaced with the appropriate information).

"**FLUID LEAKAGE**

It is necessary for you to know how fluid leakage affects the status of the (*enter component/equipment name*). Following are types/classes of leakage you need to know to be able to determine the status of the (*enter component/equipment name*). Learn these leakage definitions and remember—when in doubt, notify your supervisor. Equipment operation is allowed with minor leakage (Class I or II). Consideration must be given to fluid capacity in the item/system being checked/inspected. When in doubt, notify your supervisor.

When operating with Class I or II leaks, continue to check fluid levels as required in the PMCS.

Class III leaks should be reported immediately to your supervisor.

(1) Class I. Seepage of fluid (as indicated by wetness or discoloration) but not great enough to form drops.

(2) Class II. Leakage of fluid great enough to form drops, but not enough to cause drops to drip from the item being checked/inspected.

(3) Class III. Leakage of fluid great enough to form drops that fall from item being checked/inspected."

E.5.3.4.2 Preventive Maintenance Checks and Services (PMCS) work package **<pmcswp>**.

E.5.3.4.2.1 Work package identification information **<wpidinfo>**. Work package identification information is required for this work package. (Refer to 4.7.9.3.)

E.5.3.4.2.2 Work package initial setup **<initial_setup>**. Initial setup information is required for this work package. (Refer to 4.7.9.4.)

E.5.3.4.2.3 Preventive Maintenance Checks and Services (PMCS) procedures. The PMCS procedures shall include the checks and services data described in E.5.3.4.2.3.1. Illustrations shall be included as needed to support the PMCS procedures . (Refer to FIGURE E-2 for example of PMCS information.) For complex equipment or equipment that consists of components whose PMCS is covered by other TMs, a routing diagram may be developed to illustrate the order in which the PMCS shall be performed. PMCS procedures shall be grouped by interval and a separate PMCS work package may be prepared for each interval. If everything

Source: https://assist.dla.mil -- Downloaded: 2016-12-09T23:24Z
Check the source to verify that this is the current version before use.

is identical (e.g., initial setup, procedures, not mission capable column, etc), intervals may be combined. If time for each interval needs to be included, separate work packages shall be prepared for each interval with the time to complete the interval included in the initial setup.

E.5.3.4.2.3.1 Preventive Maintenance Checks and Services (PMCS) data preparation **<pmcstable>**. PMCS data shall consist of the entries described in E.5.3.4.2.3.1.1 through E.5.3.4.2.3.1.6. The text in parenthesis and bold shall be the headings for the PMCS table. PMCS is **standard information per paragraph 4.7.13.7**. (Refer to FIGURE E-2.)

E.5.3.4.2.3.1.1 Item number **<itemno>**. Item numbers (***ITEM NO***.) shall be assigned to the PMCS procedures. The PMCS procedures shall be arranged in a logical sequence requiring minimum time and motion on the part of the person(s) performing them and shall be so arranged that minimum interference will occur between persons performing the checks simultaneously on the same end item.

E.5.3.4.2.3.1.2 Intervals **<interval>**. The designated interval (***INTERVAL***) (e.g., “before,” “during,” “after,” “weekly,” etc.) when each check is to be performed shall be included. Procedures done first or most frequently (e.g., “before” checks and services) shall appear before “during” and “after” checks and services. The PMCS intervals which can be used are as follows **TEXT DELETED**

Before

During

After

Daily

Weekly

Monthly

Quarterly

Semiannually

Annually

Biennially

Periodic

Intermediate (**Aviation only**)

Man-hour/day (**Aviation only**)

Phased (**Aviation only**)

Other

E.5.3.4.2.3.1.3 Man-hours **<manhours>**. When specified by the acquiring activity, man-hours (***MAN-HOUR***) required to complete all prescribed lubrication services shall be included. Man-hours shall be stated to the nearest 10th of an hour.

Source: https://assist.dla.mil -- Downloaded: 2016-12-09T23:24Z
Check the source to verify that this is the current version before use.

E.5.3.4.2.3.1.4 Item to be checked or serviced **<checked>**. The items listed (***ITEM TO BE CHECKED OR SERVICED***) shall be identified in as few words as possible to clearly identify the item. Usually the common name (e.g., bumper, gas can and mounting bracket, front axle, etc.) will be enough.

E.5.3.4.2.3.1.5 Procedure **<pmcsproc>**. The PMCS procedures shall include step-by-step instructions, supporting illustrations and references to any other information required to perform each check or service. This may include lubrication, appropriate tolerances, adjustment limits, and instrument gauge readings. When specified by the acquiring activity, illustrations shall be prepared to identify the location or the process of the task being performed and shall be integrated with the procedures. Whenever replacement or repair is recommended, the maintenance task shall be referenced. PMCS procedural steps shall be numbered in accordance with paragraph 4.7.12.1.

E.5.3.4.2.3.1.6 Not mission capable if: **<eqpnotavail>**. If a PMCS item has not mission capable criteria , a brief statement shall be provided to detail the condition (***NOT MISSION CAPABLE IF:***)(e.g., malfunction, shortage) that would cause the equipment to be less than fully ready to perform its assigned mission. If the procedure contains detailed steps, the statement shall be placed opposite the applicable step.

E.5.3.4.2.4 Mandatory replacement parts **<mrplpart>**. All items that must be replaced during PMCS whether they have failed or not shall be identified in the initial setup of the PMCS work package and referenced to the mandatory replacement parts list in the supporting information.

E.5.3.4.3 Preventive Maintenance Checklist (PMC). When specified by the acquiring activity, a PMC shall be prepared as specified in APPENDIX J.

E.5.3.5 Maintenance work packages (**not required for aircraft PM and PMS manuals**) **<maintwp>**. Maintenance information shall be prepared and functionally divided into individual maintenance work packages **<maintwp>** containing one or more complete, start-to-finish maintenance tasks **<maintsk>**. (Refer to E.5.3.5.3.) These maintenance work packages should be in the order listed in the MAC and shall use the same task titles **<title>** as shown in the MAC. Every entry in the MAC shall be contained in a maintenance task within the maintenance publications (TMs, NMWR, DMWR, SUM, SAM, etc.) for the system. The associated maintenance work package may be in a higher level publication than the MAC is in. Refer to FIGURES 1 and 2 in the front of this standard for examples of maintenance work packages. The technical content structure for these work packages shall be consistent from work package to work package. Illustrations shall be prepared to identify the location or the process of the task being performed and shall be integrated with the procedures.

a. Maintenance instructions shall reference all work packages required for any unusual or critical steps such as specifying QA checks (**depot and aviation only**), care and handling of ESD sensitive items and all hazardous material (e.g., ammunition, radioactive components or materials, including prevention of deterioration due to rough handling, exposure to adverse weather conditions, or other hazards). Visual inspection and safety criteria shall be prepared to determine item serviceability. When applicable, instructions

Source: https://assist.dla.mil -- Downloaded: 2016-12-09T23:24Z
Check the source to verify that this is the current version before use.

shall contain references to the work packages for disposition of defective ammunition. (Refer to E.5.3.2.3.9.2.) Work packages shall be prepared for use of cleaning materials and paint authorized for use in the specified maintenance operations. When a tool is unusual or abnormal, it shall be described. Other tools, except for tools in a kit, may be described.

b. When specific to the equipment, applicable CPC procedural steps shall be included, or the work package shall reference applicable CPC publications.

c. NSNs shall not be used in procedural steps, illustrations, or legends of maintenance work packages.

d. P/Ns shall not be used in procedural steps, illustrations, or legends, except when essential for identification.

e. Aviation maintenance TMs shall reference work packages in TM 1-1500-204-23, as applicable.

f. The maintenance instructions shall be prepared to include required environmental control data and information. Instructions shall be prepared for information on any special maintenance required under extreme temperature, altitude, and humidity conditions within the limits established by the design specification for the equipment.

g. (**DMWRs/NMWRs only**) A Reliability, Availability, and Maintainability (RAM) table shall be prepared listing the pertinent measurable RAM ranges for the major overhauled components. (Refer to FIGURE E-3.) The RAM requirements shall be prescribed by maintenance engineering of the acquiring activity. When established by maintenance engineering, the requirements shall include critical measurement factors such as Meantime Between Failures (MTBFs), Mean Time to Repair (MTTR), availability, and maintenance ratio. The reliability and availability portion of the table shall give the minimum acceptable values, while the maintainability portion shall provide the maximum allowable rates. Availability may be expressed as a probability versus a qualified number. When specified by the acquiring activity, the RAM information may be prepared in a narrative. (Refer to FIGURE E-3.)

h. When maintenance tasks are updated during a change/revision cycle, the MAC shall be updated to reflect any changes made in the maintenance procedures (e.g., new tasks, deleted tasks, changes in times, etc.)

E.5.3.5.1 Work package identification information **<wpidinfo>**. Work package identification information is required for this work package. (Refer to 4.7.9.3.)

E.5.3.5.2 Work package initial setup **<initial_setup>**. Initial setup is required for this work package. (Refer to 4.7.9.4.)

E.5.3.5.3 Maintenance tasks **<maintsk>**. Every entry in the MAC shall be contained in a maintenance task within the maintenance publications (TMs, NMWR, DMWR, SUM, SAM, etc.) for the system. The associated maintenance work package may be in a higher level publication than the MAC is in. For each maintenance task, illustrations shall be used to support or clarify the text, including schematics, wiring diagrams, parts location drawings, and other

Source: https://assist.dla.mil -- Downloaded: 2016-12-09T23:24Z
Check the source to verify that this is the current version before use.

visual aids. The general maintenance work package is not a single task but is a series of procedures that may be referenced in the tasks below. The following is a list of the maintenance tasks which shall be used and are reserved for task titles except for follow-on and other. These titles shall not be used for procedures within the tasks.

Inspect **<inspect>** (refer to E.5.3.5.3.2)
Test **<test>** (refer to E.5.3.5.3.3)
Service **<service>** (refer to E.5.3.5.3.4)
Adjust **<adjust>** (refer to E.5.3.5.3.5)
Align **<align>** (refer to E.5.3.5.3.6)
Calibrate **<calibration>** (refer to E.5.3.5.3.7)
Remove **<remove>** (refer to E.5.3.5.3.8)
Install **<install>** (refer to E.5.3.5.3.9)
Replace **<replace>** (refer to E.5.3.5.3.10)
Repair **<repair>** (refer to E.5.3.5.3.11)
Paint **<paint>** (refer to E.5.3.5.3.12)
Overhaul **<overhaul>** (refer to E.5.3.5.3.13)
Rebuild **<rebuild>** (refer to E.5.3.5.3.14)
Lubricate **<lube>** (refer to E.5.3.5.3.15)
Mark **<mark>** (refer to E.5.3.5.3.16)
Pack **<pack>** (refer to E.5.3.5.3.17)
Unpack **<unpack>** (refer to E.5.3.5.3.18)
Preserve **<preservation>** (refer to E.5.3.5.3.19)
Prepare for use **<prepforuse>** (refer to E.5.3.5.3.20)
Assemble **<assem>** (refer to E.5.3.5.3.21)
Disassemble **<disassem>** (refer to E.5.3.5.3.22)
Clean **<clean>** (refer to E.5.3.5.3.23)
Nondestructive inspection **<ndi>** (refer to E.5.3.5.3.24)
Radio interference suppression **<ris>** (refer to E.5.3.5.3.25)
Place in service **<pis>** (refer to E.5.3.5.3.26)
Towing **<tow>** (refer to E.5.3.5.3.27)
Jacking **<jack>** (refer to E.5.3.5.3.28)
Parking **<park>** (refer to E.5.3.5.3.29)
Mooring **<moor>** (refer to E.5.3.5.3.30)
Covering **<cover>** (refer to E.5.3.5.3.31)
Hoisting **<hoist>** (refer to E.5.3.5.3.32)
Sling loading **<sling>** (refer to E.5.3.5.3.33)
External power **<extpwr>** (refer to E.5.3.5.3.34)
Preparation for storage **<prepstore>** (refer to E.5.3.5.3.35)
Preparation for shipment **<prepship>** (refer to E.5.3.5.3.36)
Transport **<transport>** (refer to E.5.3.5.3.37)
Arm **<arm>** (refer to E.5.3.5.3.38)
Load **<load>** (refer to E.5.3.5.3.39)
Unload **<unload>** (refer to E.5.3.5.3.40)

Source: https://assist.dla.mil -- Downloaded: 2016-12-09T23:24Z
Check the source to verify that this is the current version before use.

Install peripheral device **<installperdev>** (refer to E.5.3.5.3.41).
Uninstall peripheral device **<uninstallperdev>** (refer to E.5.3.5.3.42)
Upgrade/patch **<upgrade>** (refer to E.5.3.5.3.43)
Configure **<configure>** (refer to E.5.3.5.3.44)
Debug **<debug>** (refer to E.5.3.5.3.45)
Other **<other.maintsk>** (refer to E.5.3.5.3.46)
Follow-on **<followon.maintsk>** (refer to E.5.3.5.3.47)

E.5.3.5.3.1 Maintenance task requirements. Additional mandatory or unique technical information or additional explanations may be required to be included in the maintenance tasks listed in E.5.3.5.3. This information is described in E.5.3.5.3.2 through E.5.3.5.3.45. The following general requirements apply to most of the maintenance tasks in E.5.3.5.3:

a. Specific instructions shall be prepared for lockwiring, installing cotter pins, use of sealing compounds, lubricants or CPCs, and similar operations with applicable references to the expendable and durable items list.
b. Procedures shall not be prepared for separation of bonded, press-fitted, soldered, welded, or riveted parts; or the removal of electronic circuitry parts, unless such removal is necessary to clean, inspect, or test separately.
c. If servicing (e.g., pressurizing and charging with gas, lubrication, etc.) is required upon completion of a maintenance task, include this information as part of the task.
d. Warnings and cautions shall be included whenever chemicals or cleaning compounds are used or combined which may result in a dangerous or hazardous mixture. Whether the danger is to personnel or equipment, it shall be identified and the effect (e.g., gases, fumes, caustic, and fire) shall be stated.
e. Any mandatory replacement parts required shall be indicated in the maintenance work package procedural step(s) and reference made in the initial setup to the mandatory replacement parts work package in supporting information for those parts.
f. Torque requirements, values, and sequences shall be indicated. Only critical torques **<torque>** shall be indicated in task steps. All noncritical torques will be covered by the Torque Limits work package (refer to E.5.3.11) and a reference to the work package shall be provided. Torque values shall be given for all structural attaching hardware, fluid couplings (fuel, oil, hydraulic, pneumatic, etc.), and connections. Torque values shall include torque correction factors when crowfoot extensions, thread lubricants, and cadmium-plated screws or nuts are used. Torque values identified in the tasks must reflect torque wrenches authorized to personnel targeted to perform tasks. Upon completion of torque action, instructions shall be prepared on use of an orientation mark (striping).
g. Such terms as “reverse the disassembly procedures” or “installation is the reverse of removal” shall not be used in any maintenance task.
h. (**Depot and aviation maintenance only**) Maintenance procedures or steps that have a major QA effect shall be preceded by a statement (such as “QA check”) to identify them.
i. **(DMWRs/NMWRs only)** For items that have parts with specific characteristics, wear limits, specified performance requirements, or fatigue characteristics or tolerances, OIPs shall be included in any applicable maintenance task.

Source: https://assist.dla.mil -- Downloaded: 2016-12-09T23:24Z
Check the source to verify that this is the current version before use.

E.5.3.5.3.2 Inspect **<inspect>**. Instructions detailing all required inspections to determine the serviceability of an item by comparing its physical, mechanical, and/or electrical characteristics with established standards through examination (e.g., by sight, sound, or feel) shall be prepared. Special inspection requirements cited below shall be included as necessary.

E.5.3.5.3.2.1 Inspect during assembly. Instructions shall be prepared for testing and inspection during or after assembly to ensure proper assembly of the item. Correct methods of testing, instructions for making tolerance checks, and instructions for inspection of distance measurements (e.g., clearance, end play, backlash) shall be prepared. Measurement criteria and tolerances shall reflect the Test Measurement and Diagnostic Equipment (TMDE) available to the user**.**

E.5.3.5.3.2.2 Inspection of ammunition, chemical ammunition, or components including those that contain radioactive materials **(Maintainer, below depot sustainment, or ASB only)**. The following information shall be prepared for ammunition, chemical ammunition, or components including those that contain radioactive materials:

a. A statement shall be included that inspection criteria are provided to ensure that performed maintenance will restore items to an acceptable level. At a minimum, the types of inspection procedures shall include a pre-maintenance inspection to be conducted during unpacking, in-process inspections, and final acceptance inspection. Regulations and technical publications relating to policy responsibility and procedures applicable to ammunition stockpile reliability, ammunition surveillance, and quality evaluation programs shall be referenced. When approved by the acquiring activity, these procedures contained in other publications shall be included in the task.

b. Visual inspection criteria shall be prepared for the packing of the items in conformance with the inspection criteria noted in a above.

c. Detailed instructions and criteria shall be prepared for function testing. When test fixtures must be fabricated, diagrams and instructions for the fabrication shall be prepared. Where ammunition is required for function testing weapons, it shall be identified by Department of Defense Ammunition Code (DODAC), NSN, and nomenclature. This shall also include dummy rounds.

E.5.3.5.3.2.2.1 Specific instructions for inspection of radioactive ammunition, chemical ammunition or components.

a. Regulations and technical publications relating to policy responsibility and procedures applicable to radioactive materials procedures shall be referenced.

b. Instructions shall be prepared for inspection methods or techniques used to detect defective components or end items being processed. Classification of Materiel Defects tables (**standard information per paragraph 4.7.13.7**) **<defect.tab>** shall be prepared for ammunition components and packaging material. (Refer to FIGURE E-4.) A classification of defects (e.g. minor, major, or critical) for both functioning and nonfunctioning categories shall be included. The tabulated data shall include the following entries:

(1) A list of categories of defect **<defectype>** (critical, major, minor) by the defects attributable to each component **<condition>**.

Source: https://assist.dla.mil -- Downloaded: 2016-12-09T23:24Z
Check the source to verify that this is the current version before use.

(2) The corrective action to be taken **<actionreq>** or a reference **<xref>/<link>** to the corrective action.

(3) The inspection methods **<insp-method>** used to determine if corrective action was accomplished.

(4) The acceptable quality level **<acceptqual>** established for each defect.

c. Instructions shall be prepared to establish a uniform system of examination for deterioration or damage. Definitions shall be prepared to explain minor, major, and critical defects. When appropriate, lower maintenance levels/classes shall be included.

d. Instructions for disposition of lots shall be prepared and shall be as specified by the acquiring activity. The following statements shall be included in the TM verbatim (italicized text in parenthesis shall be replaced with the appropriate information):

(1) "Each lot of material shall be inspected and screened 100 percent if one critical nonfunctioning defect is observed. If a critical functioning defect occurs, save the remaining pieces and components; suspend the lot from local issue and use. Submit malfunction reports as prescribed in AR 75-1. Disposition instructions will be furnished by the U.S. Army Materiel Command.

(2) A lot of materiel is acceptable for issue if the acceptable criteria as indicated in (*insert applicable table number*) are met.

(3) Report all lots of materiel rejected under applicable serviceability table for disposition instructions to: Commander, U.S. Army TACOM Life Cycle Management Command, Chemical/Biological Defense, ATTN: AMSTA-LCW-C, 6501 E. 11 Mile Road, Warren, MI 48397-5000. Include a statement describing the capability and workload situation of your organization as to whether you are capable of reworking/demilitarizing the item."

E.5.3.5.3.2.2.2 Specific instructions for inspection of non-radioactive ammunition, chemical ammunition or components.

a. Criteria shall be prepared for inspection methods used to detect defective components or end items that have corrective action (every corrective action will have a corresponding work package). An Acceptable, Reparable, Irreparable Criteria table shall be prepared for ammunition components and packaging material. (Refer to FIGURE E-4). The default method for inspection is visual. If a method other than visual is required, it will be annotated in the defects column with a superscript. The tabulated data shall include the following entries:

(1) A list of components that have a correction action work package associated with it.

(2) The condition that is acceptable.

(3) The condition that requires repair.

(4) Reference **<xref>/<link>** to the corrective action.

(5) The condition that is irreparable.

Source: https://assist.dla.mil -- Downloaded: 2016-12-09T23:24Z
Check the source to verify that this is the current version before use.

b. The following statement shall be included in the TM verbatim:

" For pass/fail inspection criteria on a specific Department of Defense Identification Code (DODIC), consult Munitions History Program, Inspection Module or SB 742-1."

c. Instructions for disposition of lots shall be prepared and shall be as specified by the acquiring activity. The following statement shall be included in the TM verbatim:

" Disposition of each lot of material, including reporting, shall be in accordance with SB 742-1."

E.5.3.5.3.2.3 Pre-embarkation inspection of materiel in units alerted for overseas movement. If applicable, pre-embarkation inspection instructions shall be prepared. They shall be as specified by the acquiring activity.

E.5.3.5.3.2.4 Inspection of installed items. Instructions shall be prepared for inspection of components, assemblies, or parts installed on the equipment. Instructions shall indicate that inspection will be performed with the item in its normally installed position or condition. The instructions shall consider accessibility and visibility of the item being inspected. The purpose of the inspection shall be stated (e.g., to determine if the item is damaged, deteriorated, or incomplete to the extent that it should be replaced or repaired). Instructions shall be prepared for inspecting solder joints on an electronic item, welds on an armored vehicle, fluid leakage on vehicles, connectors on electronic devices, and other items to identify defects that must be corrected.

E.5.3.5.3.2.5 Inspection-acceptance and rejection criteria. Inspection requirements shall be prepared to include acceptance and rejection information sufficient to determine that new, repaired, and used components, assemblies, and subassemblies conform to wear limits, fits, and tolerances established.

E.5.3.5.3.3 Test **<test>**.

a. Instructions shall be prepared, as applicable, to verify serviceability by measuring the mechanical, pneumatic, hydraulic, chemical, electrical, or electronic characteristics of components, assemblies, and subassemblies and comparing those characteristics with prescribed standards. For software, instructions shall be prepared as applicable to verify usability/operability/functionality of the software.

b. (**DMWR/NMWR only**) Information shall be prepared for final testing of the highest assembly or equipment/end item involved to ensure the parameters of RAM and durability are met. The following procedures shall be prepared:

(1) Inspection. Inspection procedures (refer to E.5.3.5.3.2) shall be prepared that are required before final testing to ensure the item is complete and ready for final testing. Instructions shall be prepared for any minor preparation tasks needed before final testing.

(2) Lubrication. Any final lubrication procedures (refer to E.5.3.5.3.15) that need to be done before final testing shall be prepared.

Source: https://assist.dla.mil -- Downloaded: 2016-12-09T23:24Z
Check the source to verify that this is the current version before use.

(3) Final test procedures. Test procedures (refer to E.5.3.5.3.3), performance standards, and tolerances shall be prepared to establish that the equipment is adequately overhauled and ready for issue without qualifications. The procedures shall list all tools, TMDE, jigs, fixtures, and other support items required for the test in the initial setup information. Operating instructions shall be prepared for special test equipment where necessary. Procedures shall be prepared for minor adjustments that can be done without disassembling equipment. Complete procedures shall be prepared for burn-in or run-in tests.

(4) Final painting, refinishing, and marking. Procedures shall be prepared for any final painting (refer to E.5.3.5.3.12), refinishing, and marking (refer to E.5.3.5.3.16) that could not be done during the overhaul procedures. The materials and tools required to do the job shall be identified. Depot level maintenance shall include data plate replacement data. For data plates which require replacement, the type of material shall be indicated. Detailed preparation and attachment instructions shall be prepared. The instructions for stamping data plates shall include the initials of the facility performing the overhaul or modification, the contact number (if applicable), the date of overhaul or modification, the part number, and the total operating time since new (if applicable). The instructions shall specify the letter and figure sizes and indicate their placement (adjustment to manufacturer's data). The following statement shall be inserted:

"When sufficient space is not available on the existing data plate to add information, the plate shall be replaced and all pertinent data transferred to the new plate. Data shall not be stamped directly on any part, assembly, or item of equipment except when approved by the Government."

E.5.3.5.3.4 Service **<service>**.

a. Instructions shall be prepared for replenishment of fuel; oil; hydraulic or other fluids; oxygen, nitrogen, or other gases; and tire pressure. They shall also include any other such items and materials (except for lubricants) required for complete servicing of the equipment.

b. Servicing instructions shall be supplemented with a diagram showing locations of regular and emergency servicing points. Items located on each side of the equipment which require servicing shall be illustrated and identified as right and left side. NO STEP areas on walkways leading to any tank (in an aircraft) shall be indicated and necessary cautions shall be included.

c. All expendable and durable items used in the servicing instructions shall be referenced and contained in the expendable and durable items list (refer to G.5.7) by standard nomenclature, P/N, and CAGEC. A servicing diagram shall be referenced or included to support the procedures when required.

d. The warnings and cautions to observe in servicing a particular system tank or reservoir (e.g., grounding and prevention of fire hazards) shall be stated clearly.

e. Instructions shall be prepared regarding access to any out-of-the-way or unusual places requiring service.

Source: https://assist.dla.mil -- Downloaded: 2016-12-09T23:24Z
Check the source to verify that this is the current version before use.

E.5.3.5.3.5 Adjust **<adjust>**. Adjustment instructions shall be prepared for the item to maintain or regulate, within prescribed limits, by bringing into proper position, or by setting the operating characteristics to specified parameters before operating the part, system, or end item.

E.5.3.5.3.6 Align **<align>**. Detailed alignment instructions shall be prepared to adjust specified variable elements of an item to bring about optimum or desired performance.

E.5.3.5.3.7 Calibrate **<calibration>**. Instructions to determine and cause corrections to be made or to be adjusted on instruments of test, measuring, and diagnostic equipment used in precision measurement. It consists of comparisons of two instruments, one of which is a certified standard of known accuracy, to detect and adjust any discrepancy in the accuracy of the instrument being compared. Equipment that requires calibration after assembly or installation shall be indicated. Reference shall be made to the publication containing the applicable calibration procedure. **TEXT DELETED**

E.5.3.5.3.8 Remove **<remove>**. Instructions shall be prepared to take a component off an asset to facilitate other maintenance on a different component or on the same component (except for replace and repair.) If a component is removed only to repair or replace it, the removal procedure shall be incorporated into the repair or replace task, rather than using a separate remove task. A remove task typically requires an install task. The remove task is authorized by the LPD/MAC and the assigned maintenance level is shown as the third position code of the SMR code.

a. Instructions shall be prepared in the logical removal sequence. Illustrations shall be used to support and clarify the text. Instructions shall be prepared for checking and recording gear wear patterns, backlash, ESD protective control measures, measurements and tolerances for determining thickness of shims and purpose for shims, and separating and indexing parts for the assembly. Procedures shall identify items which must be matched or precision-mated when installed at a later time.

b. **(DMWR/NMWR only)** Instructions shall be prepared for recording the condition of the item/assembly, marking, handling, and storing the item.

c. **(Software only)** The remove task shall be used for removing software from work station/viewing hardware.

E.5.3.5.3.9 Install **<install>**. Instructions shall be prepared for the placing, positioning, or otherwise locating a component to make it part of a higher level end item. If a component is only installed after repair or to replace it, a separate install task shall not be prepared . The install procedure shall be incorporated into the repair or replace task. The install task is authorized by the LPD/MAC and the assigned maintenance level is shown as the third position code of the SMR code. Illustrations shall be used to support and clarify the text. Illustrations shall be used to support and clarify the text..

a. Instructions shall be referenced for painting, refinishing, and marking the item before its installation in the next higher assembly of the equipment.

b. Inspection instructions shall be prepared for checking alignment and adjustment of the item during the installation sequence. These instructions shall include a statement that adjustment, servicing, testing, and/or an operational check is required.

c. Instructions such as “reverse the removal procedure,” shall not be used.

Source: https://assist.dla.mil -- Downloaded: 2016-12-09T23:24Z
Check the source to verify that this is the current version before use.

d. Specific instructions shall be prepared for lockwiring, installing cotter pins, use of sealing compounds, lubricants, or CPCs and similar operations with applicable references to the expendable and durable items list.

e. Instructions shall identify any mandatory replacement parts or items that are required during the course of the installation. Reference shall be made in the maintenance work package initial setup to the Mandatory Replacement Parts List. Refer to G.5.9.

f. **(Software only)** The install task shall be used for installing software to work station/viewing hardware.

E.5.3.5.3.10 Replace **<replace>**. Instructions to take off an unserviceable component and put a serviceable component in its place. Replace may contain references to separate remove and install tasks if the component is removed/installed for purposes other than to replace it with a new component. The replace task is authorized by the LPD/MAC and the assigned maintenance level is shown as the third position code of the SMR code. Replace shall not be used for software to remove an old version and replace with new version. Remove/install and/or upgrade shall be used for this purpose.

E.5.3.5.3.11 Repair **<repair>**. Instructions for repair actions required to restore an item to a completely serviceable or fully mission capable status. Repair may contain references to separate remove and install tasks if the component is removed/installed for purposes other than to repair it. Repair shall not be used for replacement action. The repair task is authorized by the LPD/MAC and the assigned maintenance level is shown as the fourth position code of the SMR code.

E.5.3.5.3.12 Paint **<paint>**. Instructions shall be prepared for required painting, refinishing, and marking of assembled components, assemblies, subassemblies, or end item. Reference may be made to TM 55-1500-345-23, TB 43-0118, TM 43-0139, or other documents. Instructions shall also be prepared for any final painting, refinishing, and marking that could not be done during the overhaul procedures.

E.5.3.5.3.13 Overhaul **<overhaul>**. Instructions shall be prepared to restore an item to a completely serviceable/operational condition as required by maintenance standards in the appropriate technical publications. Overhaul is normally the highest degree of maintenance performed by the Army. Overhaul does not normally return an item to a like new condition.

E.5.3.5.3.14 Rebuild **<rebuild>**. Instructions shall be prepared for the restoration of unserviceable equipment to a like new condition in accordance with original manufacturing standards. Rebuild is the highest degree of materiel maintenance applied to Army equipment. The rebuild operation includes the act of returning to zero those age measurements (e.g., hours/miles) considered in classifying Army equipment/components.

E.5.3.5.3.15 Lubricate **<lube>**. Pertinent mandatory lubrication instructions, CPC procedures, and general lubrication instructions not contained elsewhere shall be prepared and appear in this section. (Refer to APPENDIX K.)

E.5.3.5.3.16 Mark **<mark>**.

a. For non munitions, instructions shall be prepared placing identifying information on the equipment or item. This may be done after repair or when required due to normal wear.

b. For munitions, the following information shall be prepared as a minimum:

Source: https://assist.dla.mil -- Downloaded: 2016-12-09T23:24Z
Check the source to verify that this is the current version before use.

(1) Any special sequence of actions necessary to protect the ammunition.

(2) Detailed step-by-step instructions shall be provided on the proper method to mark the ammunition and/or packaging

(3) The appropriate references, i.e., drawings, specifications, etc., shall be provided to ensure correct color, location, and size of markings.

c. For DMWRs/NMWRs, a reference to the preservation, packaging, and marking general information work package shall be included.

d. For DMWRs/NMWRs, this work package shall be used if instructions for marking IUID are required.

E.5.3.5.3.17 Pack **<pack>**.

a. Instructions shall be prepared detailing how to place an item into a container for either storage or shipment after service and other maintenance operations have been completed.

b. For munitions, the following information shall be prepared as a minimum:

(1) Any special sequence of action necessary to protect the ammunition.

(2) If a specially designed reusable container is involved for either the end item or components that are authorized for replacement, instructions shall be prepared to report or reenter the empty container through supply channels.

(3) When providing packaging instructions, the following information shall be included: part number/drawing number, CAGEC, and drawing title.

(4) Instructions shall be prepared on how to package defective ammunition. In addition, the following statement shall be inserted, “Defective ammunition shall be handled, packaged, and stored in accordance with local Standard Operating Procedure.

c. For DMWR/NMWRs, a reference to the preservation, packaging, and marking general information work package shall be included.

E.5.3.5.3.18 Unpack **<unpack>**. The following shall be included for this task:

a. Instructions shall be prepared detailing how to remove an item from a storage or shipping container or other shipping device prior to service or other maintenance operations. If the containers are to be used again, kept for future use, turned into supply, or require a special disposition method, the necessary procedures for reassembly of the container shall be prepared. These instructions shall be supported by illustrations.

b. For munitions, any special sequence of action necessary to protect the ammunition.

c. For munitions, if a specially designed reusable container is involved for either the end item or components that are authorized for replacement, instructions shall be prepared to report or re-enter the empty container through supply channels.

E.5.3.5.3.19 Preserve **<preservation>**. Instructions shall be prepared for all authorized methods to treat systems and equipment whether installed or stored, to keep them in a satisfactory condition. For DMWR/NMWRs, a reference to the preservation, packaging, and marking general information work package shall be included.

Source: https://assist.dla.mil -- Downloaded: 2016-12-09T23:24Z
Check the source to verify that this is the current version before use.

E.5.3.5.3.20 Prepare for use **<prepforuse>**.

a. As applicable, instructions shall be prepared for assembly or other tasks required to prepare the equipment for use after it has been unpacked such as power requirements, connections, and initial control settings needed for installation purposes.

b. For security measures for electronic data, instructions shall be prepared for handling, loading, purging, overwriting, or unloading classified electronic data under usual conditions. Instructions shall meet current security regulations as they pertain to automation security.

E.5.3.5.3.21 Assemble **<assem>**. Step-by-step instructions shall be prepared for assembling items disassembled or removed that make up the components, assemblies, or subassemblies. Illustrations shall be used to support and clarify the text.

a. Instructions shall be prepared for assembling precision-matched or mated parts marked during disassembly.

b. Instructions shall be prepared for checking and recording gear wear patterns, backlash, shimming requirements, and the indexing of parts to ensure proper alignment during assembly. The purpose of shims shall be given (e.g., adjust backlash, prevent metallurgical reaction, etc.).

c. Torque requirements, values, and sequences shall be indicated. Only critical torques **<torque>** shall be indicated in task steps. All non-critical torques will be covered by the Torque Limits work package. (Refer to E.5.3.11.) Torque values shall be given for all structural attaching hardware, fluid couplings (fuel, oil, hydraulic, pneumatic, etc.), and connections. Torque values shall include torque correction factors when crowfoot extensions, thread lubricants, and cadmium-plated screws or nuts are used. Torque values identified in the tasks must reflect torque wrenches authorized to personnel targeted to perform tasks. Upon completion of torque action, instructions shall be prepared on use of an orientation mark (striping).

d. Instructions such as “reverse the disassembly procedure,” shall not be used.

e. ESD standards, ESD sensitive items along with the protective and control measures to be taken, and CPC procedures shall be identified.

f. For munitions, direction shall be provided if the assembly procedure results in a logistics change (NSN, DODIC, etc.) to the end item.

E.5.3.5.3.22 Disassemble **<disassem>**. The following shall be included for this task:

a. Instructions shall be prepared to take apart components, assemblies, or subassemblies to the extent specified by the MAC and SMR coded items. Illustrations shall be used to support and clarify the text. Instructions shall be prepared for precision-matched or mated components, assemblies, subassemblies, or parts (other than common hardware), including ESD sensitive items, to ensure they will be marked, handled, and stored to preclude damage and to ensure assembly and installation in their matched positions.

b. For munitions, direction shall be provided if the disassembly procedure results in a logistics change (NSN, DODIC, etc.) to the end item or component(s).

Source: https://assist.dla.mil -- Downloaded: 2016-12-09T23:24Z
Check the source to verify that this is the current version before use.

E.5.3.5.3.23 Clean **<clean>**. Step-by-step instructions on how to remove dirt, corrosion, or other contaminants from equipment shall be prepared. All cleaning instructions, methods, special equipment, and materials shall be specified. Instructions shall be prepared for corrosion prevention treatment of metal parts after cleaning.

a. All materials used in the cleaning and corrosion prevention of equipment, components, or parts shall be referenced and contained in the expendable and durable items list. (Refer to G.5.7.)
b. Cleaning materials used for the cleaning of systems, subsystems, and components in order to prepare them for painting, bonding, applying sealants or adhesives, and the removal thereof shall be Hazardous Air Pollutant (HAP) Free. The use of HAP containing cleaner(s) is considered a serious risk to human health and the environment due to potential impacts on installations that are required to perform the specific cleaning tasks. If a HAP containing cleaner(s) must be used due to performance/technical requirements, then it shall be formally approved by the risk acceptance authority for serious-level risks, as identified in the System Safety program and MIL-STD-882.
c. Instructions shall include cautions to avoid damage of components and to prevent the entrance of water or other solvents into electrical components, ducts, or similar openings.
d. Warnings and cautions shall be prepared whenever chemicals or cleaning compounds are used or combined which may result in a dangerous or hazardous mixture. Any danger to personnel or equipment shall be identified and the effect (e.g., gases, fumes, caustic, and fire) shall be stated.
e. For aircraft, detailed instructions shall be prepared for cleaning and washing the entire aircraft. Instructions shall be prepared for the removal of the battery, the relief tube, and power plant. Removal instructions for armament exhaust deposits or other items or material as necessary shall be provided. Instructions shall also be prepared regarding components which require relubrication after the aircraft has been washed or steam cleaned.
f. Cleaning methods or materials shall not cause corrosion, create conditions that promote corrosion, or remove/negate any in-place corrosion prevention methods. If normal cleaning (e.g. pressure washing) has the potential to remove coatings, CPCs or other corrosion prevention materials instructions (or reference to the appropriate methods) shall be provided on how to properly restore the corrosion prevention to the affected system(s).
g. The standard cleaning practice shall include instructions for proper cleanout and draining of enclosed areas. This shall include but is not limited to cleaning drain holes; removing drain plugs; and opening covers, hatches, etc. The procedure should clearly state when to open access points; how to clean enclosed areas; how to verify that such spaces are clean and dry; and how to reinstall drain plugs, covers, hatches, etc.

E.5.3.5.3.24 Nondestructive Inspection (NDI) **<ndi>**. Step-by-step instructions on preparation and accomplishment of inspections or tests which do not destroy or damage the item or equipment.

a. The reject criteria shall be specified in all cases. This shall be done by means of a blanket statement, individual criteria for a part, or a combination of both.
b. When several NDI methods are permitted, the relative order of preference shall be specified.

Source: https://assist.dla.mil -- Downloaded: 2016-12-09T23:24Z
Check the source to verify that this is the current version before use.

c. Instructions shall be prepared for removing primer and/or paint for TMs that require the removal process as part of NDI procedures. If a part requires a special process, this procedure must be contained within the NDI procedure for that part.

d. Cleaning requirements before, during, and after NDI shall be specified. If a part has a built-in bearing, then a procedure shall be prepared to ensure protection of the bearing for the NDI procedure.

e. The following requirements apply to **aircraft NDI TMs only.**

(1) Instructions for use of visible dye penetrants shall not be included as part of NDI instructions unless specified otherwise by the proponent activity. When required, refer to TM 1-1500-335-23 for preparation of those instructions.

(2) When specified by the acquiring activity, TM 1-1500-335-23 shall be the only NDI document referenced in the NDI procedures. The technical provisions of this TM shall be followed. Individual NDI procedures shall be specified for each part requiring NDI. In order to satisfy this requirement, the following shall be prepared:

(a) If penetrant is required, the applicable process in TM 1-1500-335-23 shall be identified.

(b) If magnetic particle inspection is required, the specific TM 1-1500-335-23 method, the type of magnetization, and amount of current or ampere turns shall be provided.

E.5.3.5.3.25 Radio interference suppression **<ris>**.

a. Instructions shall be prepared for primary components in the suppression system. The instructions shall also include the replacement of these primary components.

b. Secondary components shall be referenced to pertinent maintenance procedures that contain the removal and installation instructions.

c. Instructions shall be prepared for testing radio interference suppression components.

E.5.3.5.3.26 Place in service **<pis>**. Instructions shall be prepared for actions not previously provided in a service upon receipt work package (refer to E.5.3.2) that may be required for an assembly, component, or end item. Instructions shall be prepared such as removal of an item from storage and preparation for installation on an end item. Final servicing checks, calibration, leak checks, charging, pressurizing, and operational checks shall be prepared.

E.5.3.5.3.27 Towing **<tow>**. Instructions shall be prepared to connect one vehicle to another for the purpose of having one vehicle moved through the motive power of the other vehicle.

E.5.3.5.3.28 Jacking **<jack>**. Instructions shall be prepared for placement of jack stands or supporting devices and for raising or lifting a vehicle to facilitate maintenance.

E.5.3.5.3.29 Parking **<park>**. Instructions shall be prepared to safely place a vehicle in a lot, ramp area, or other designated location.

E.5.3.5.3.30 Mooring **<moor>**. Instructions shall be prepared to secure a vehicle by chains, ropes, or other means to protect the vehicle from environmental conditions or secure for transportation.

E.5.3.5.3.31 Covering **<cover>**. Instructions shall be prepared to place a protective wrapping over a vehicle to protect it from environmental conditions or to hide (e.g., camouflage) it.

Source: https://assist.dla.mil -- Downloaded: 2016-12-09T23:24Z
Check the source to verify that this is the current version before use.

E.5.3.5.3.32 Hoisting **<hoist>**. Instructions shall be prepared to allow a vehicle to be raised by cables or ropes through attaching points.

E.5.3.5.3.33 Sling loading **<sling>**. Instructions shall be prepared to place a sling around a vehicle to allow it to be raised.

E.5.3.5.3.34 External power **<extpwr>**. Instructions shall be prepared on how to apply electrical power from any authorized power source (e.g., external generator or facility power).

E.5.3.5.3.35 Preparation for storage **<prepstore>**. This task shall be prepared and as applicable, shall include the following for both short-term and long-term storage:

a. Instructions for security procedures and special storage requirements for sensitive items (security, terrorism, etc.) related to storing the equipment.
b. Instructions for special preservation, packaging, packing, marking, ESD-protective and control measures required for storage. These shall include the use of specially designed reusable containers.
c. Instructions on special use of corrosion-preventive compounds, moisture barriers, and desiccant materials required for storage.
d. Instructions for applying special identifying and cautionary markings to storage containers. These shall include security classification, special temperature requirements, and shelf life.
e. Instructions will be provided by the proponent activity for placing equipment in and for removing it from administrative storage.
f. (**Ammunition only**) Instructions for basic load storage, quantity-distance class, storage compatibility groupings, storage temperatures, stacking limits, and other pertinent storage requirements per DA PAM 385.64.
g. Instructions for aviation ground support equipment requirements to include a reference to TM 1-1500-204-23 for general technical information for preparation for storage.
h. For wheeled and tracked vehicles, refere to MIL-STD-3003 for further guidance related to storage.

If there are no requirements related to storage for the equipment, the following shall be inserted in the work package:

"There are no requirements related to storage for *(insert equipment name)*."

E.5.3.5.3.36 Preparation for shipment **<prepship>**. This task shall be prepared and as applicable, shall include the following:

a. Instructions for security procedures and special transportation requirements for sensitive items (security, terrorism, etc.) related to shipping the equipment.
b. Instructions for special preservation, packaging, packing, marking, ESD-protective and control measures required for shipping. These shall include the use of specially designed reusable containers.
c. Instructions on special use of corrosion-preventive compounds, moisture barriers, and desiccant materials required for shipping.
d. Instructions for applying special identifying, shipping, and cautionary markings to shipping containers. These shall include security classification, special temperature requirements, and shelf life.

Source: https://assist.dla.mil -- Downloaded: 2016-12-09T23:24Z
Check the source to verify that this is the current version before use.

e. Instructions should cover any component removal, fluid removal, etc. required to ship/transport the item.

f. (**Ammunition only**) Instructions for basic load shipping, quantity-distance class, shipping compatibility groupings, storage temperatures, stacking limits, and other pertinent shipping requirements per DA PAM 385-64.

g. Instructions for aviation ground support equipment requirements to include a reference to TM 1-1500-204-23 for general technical information for preparation for shipment.

h. For wheeled and tracked vehicles, refer to MIL-STD-3003 for further guidance related to storage.

If there are no requirements related to preparation for shipment for the equipment the following shall be inserted in the work package:

"There are no requirements related to preparation for shipment for *(insert equipment name)*."

E.5.3.5.3.37 Transport **<transport>**. This task shall be prepared and as applicable, shall include the following:

a. Requirements for dimensions, weights, and types of transport that can/can't be used.

b. Instructions for transporting the equipment via air, sea, land, and rail. For vehicles, this includes instructions for self-transport (i.e., it can be driven, flown, or sailed to its destination). Instructions should cover any chocking, bracing, tiedown, etc. required to ship/transport the item.

c. Instructions for loading and unloading the equipment.

d. Instructions for procedures on the proper handling, blocking, and bracing of basic load ammunition when being transported in trucks and other tactical vehicles.

e. (**Ammunition only**) Instructions for basic load shipping, quantity-distance class, shipping compatibility groupings, storage temperatures, stacking limits, and other pertinent shipping requirements per DA PAM 385.64.

Reference shall not be made to any Surface Deployment and Distribution Command (formerly Military Transportation Management Command) Transportation Engineering Agency (SDDC/TEA) (formerly MTMC/TEA) publications. If there are no requirements related to transport of the equipment the following shall be inserted in the work package:

"There are no requirements related to transport of *(insert equipment name)*."

E.5.3.5.3.38 Arm **<arm>**. Instructions shall be prepared for arming/activation of munitions (e.g., ammunition, mines, etc.) prior to use.

E.5.3.5.3.39 Load **<load>**. Instructions for placing assets onto a transportation medium (e.g., pallet, truck, container) or munitions into a weapon/weapon system shall be prepared as required to support the specific equipment.

a. For transportation, the act of placing assets onto a transportation medium (e.g., pallet, truck, container).

b. For munitions, the act of placing munitions onto a vehicle or aircraft.

E.5.3.5.3.40 Unload **<unload>**. Instructions for removing assets from a transportation medium (e.g., pallet, truck, container) or munitions from a weapon/weapon system shall be prepared as required to support the specific equipment.

Source: https://assist.dla.mil -- Downloaded: 2016-12-09T23:24Z
Check the source to verify that this is the current version before use.

a. For transportation, the act of removing assets from a transportation medium (e.g., pallet, truck, container).

b. For munitions, the act of removing munitions from a vehicle or aircraft.

E.5.3.5.3.41 Install peripheral device **<installperdev>**. Instructions shall be prepared for installing peripheral devices such as printers, scanner, modems, etc.

E.5.3.5.3.42 Uninstall peripheral device **<uninstallperdev>**. Instructions shall be prepared for uninstalling peripheral devices such as printers, scanner, modems, etc.

E.5.3.5.3.43 Upgrade/patch **<upgrade>**. Instructions for performing software upgrades and/or installing software patches shall be prepared.

E.5.3.5.3.44 Configure **<configure>.** Instructions for configuring the software for different uses/purposes and/or different users shall be prepared.

E.5.3.5.3.45 Debug **<debug>**. Instructions for locating software bugs and removing those bugs/correcting errors shall be prepared.

E.5.3.5.3.46 Additional maintenance tasks **<other.maintsk>**. Additional maintenance tasks may be developed when the specific type of maintenance tasks are not covered as described in E.5.3.5.3.2 through E.5.3.5.3.45. If additional maintenance tasks are used, the proponent shall submit to LOGSA the requirements for this maintenance task type for possible incorporation within future revisions to this standard.

E.5.3.5.3.47 Follow-on maintenance task **<followon.maintsk>**. Refer to E.5.3.2.3.11 for requirements.

E.5.3.6 Overhaul and retirement schedule work package **(aircraft only) <orschwp>**. A work package identifying the criteria to overhaul or retire an aircraft or aircraft components shall be prepared.

E.5.3.6.1 Work package identification information **<wpidinfo>**. Work package identification information is required for this work package. (Refer to 4.7.9.3.)

E.5.3.6.2 Work package initial setup **<initial_setup>**. Initial setup is not required for this work package.

E.5.3.6.3 Overhaul and retirement schedule **<orsch>**. The overhaul and retirements schedule shall include the following statement and the associated table (**standard information per paragraph 4.7.13.7**) (refer to FIGURE E-5):

> **"OVERHAUL AND RETIREMENT SCHEDULE**
>
> Units of operating equipment that are to be overhauled or retired at the period specified are listed here. Unless otherwise specified in TM 1-1500-328-23, Aeronautical Equipment Maintenance Management Policies and Procedures, removal of equipment for overhaul may be accomplished at the inspection nearest the time when overhaul is due."

The overhaul and retirement schedule shall be prepared as a table and shall consist of the following entries:

Source: https://assist.dla.mil -- Downloaded: 2016-12-09T23:24Z
Check the source to verify that this is the current version before use.

a. Part name. The name of the part shall be listed. An asterisk (*) shall precede the part name if the part is an indentured subassembly.

b. Part number. The official P/N of the part listed.

c. Overhaul interval hours. The maximum operating time allowed on the part before it is to be overhauled.

d. Overhaul interval notes. Any additional information required on the part's overhaul interval.

e. Retirement interval hours. Maximum operating time allowed on the part before it is removed and condemned.

f. Retirement interval notes. Any additional information required on the part's retirement interval.

E.5.3.7 General maintenance work package **<gen.maintwp>**. This work package shall be prepared as directed by the acquiring activity. It shall contain common, general, or standard maintenance procedure(s) (e.g., specific torque wrench usage, lockwire procedures, “O” ring seal installation, external power connections, etc.) applicable to other maintenance work packages contained within the TM that require this general maintenance procedure to complete the task. Maintenance tasks listed in E.5.3.5.3 shall not be included. This WP may be referenced in other maintenance work packages.

E.5.3.7.1 Work package identification information **<wpidinfo>**. Work package identification information is required for this work package. (Refer to 4.7.9.3.)

E.5.3.7.2 Work package initial setup **<initial_setup>**. Initial setup is required for this work package. (Refer to 4.7.9.4.)

E.5.3.7.3 Maintenance procedure **<proc>**. Instructions to perform a specific common, general, or standard maintenance procedure shall be prepared or referenced.

E.5.3.8 Lubrication instructions work package **<lubewp>**. This work package shall be prepared as directed by the acquiring activity. It shall contain the requirements outlined in E.5.3.8.1 through E.5.3.8.4.

E.5.3.8.1 Work package identification information **<wpidinfo>**. Work package identification information is required for this work package. (Refer to 4.7.9.3.)

E.5.3.8.2 Work package initial setup **<initial_setup>**. Initial setup is required for this work package. (Refer to 4.7.9.4.)

E.5.3.8.3 Lubrication instructions. Lubrication schedules shall be prepared to present all applications, procedures, lubricants, and lubrication points to completely lubricate equipment.

E.5.3.8.4 Lubrication charts.

Source: https://assist.dla.mil -- Downloaded: 2016-12-09T23:24Z
Check the source to verify that this is the current version before use.

a. Lubrication charts shall consist of a main drawing prepared as a three-dimensional (3D) diagram. They shall consist of enlarged or detailed views as are considered necessary to identify items which otherwise would be obscured. They shall show all lubrication requirements for all parts of the equipment requiring periodic lubrication other than those lubricated by the main engine oil system. The charts shall also indicate type of lubricant, method of application, and frequency. (Refer to FIGURE E-6.)

b. Use of black silhouette figures representing a likeness of the tool used in the application (oil can, grease gun, brush, or hand) shall be the accepted means of presenting application methods on the lubrication chart.

c. Abbreviations, as specified in MIL-HDBK-275 (aviation) or MIL-HDBK-113 (non-aviation), shall be used to present lubricant types. In the event a lubricant does not have an abbreviation listed in MIL-HDBK-275 or MIL-HDBK-113, the abbreviation shall be provided by the acquiring activity. Assigned application symbols, type abbreviations, and frequency shall be placed within the standard lubrication symbols.

d. Each application symbol and lubricant abbreviation used shall be defined. Notes may be used to specify any other than normal requirements.

E.5.3.9 DMWR/NMWR specific maintenance work packages.

E.5.3.9.1 Preservation, packaging, and marking general information work package <**ppmgeninfowp**>. This work package shall be prepared and shall be the first work package in the first maintenance chapter. This work package shall contain the information in E.5.3.9.1.1 through E.5.3.9.1.3 below.

E.5.3.9.1.1 Work package identification information **<wpidinfo>**. Work package identification information is required for this work package. (Refer to 4.7.9.3.)

E.5.3.9.1.2 Work package initial setup **<initial_setup>**. Initial setup is not required for this work package.

E.5.3.9.1.3 Preservation, packaging, and marking general information. Preservation, packaging, and marking general information shall include the below preservation, packaging, and marking general information verbatim. Individual maintenance work packages shall be prepared for pack (refer to E.5.3.5.3.17), mark (refer to E.5.3.5.3.16), and preserve (refer to E.5.3.5.3.19) tasks. This work package shall refer to the individual work packages containing the procedures for packing, marking, and preserving. This work package shall not contain any tasks/procedures.

"PACKAGING

Military preservation, Level A packing, and marking shall be accomplished in accordance with the specific packaging instructions contained in WP (*insert work package number*).

MARKING FOR SHIPMENT AND STORAGE

Storage: In addition to any special markings called out on the special packaging instruction (SPI) or in the packaging requirements code, all unit packages, intermediate packs, exterior shipping containers, and, as applicable, unitized loads shall be marked in accordance with MIL-STD-129 including bar coding. The repair facility is responsible for application of special markings as required by MIL-STD-129 regardless of whether specified in the contract/order or not. Special markings include, but are not limited to, Shelf-life markings, structural

Source: https://assist.dla.mil -- Downloaded: 2016-12-09T23:24Z
Check the source to verify that this is the current version before use.

markings, and transportation special handling markings. The marking of pilferable and sensitive materiel will not identify the nature of the materiel.

Shipment: The repair facility shall apply identification and address markings with bar codes in accordance with MIL-STD-129. A Military Shipment Label (MSL) is required for all shipments except contractor to contractor. The MSL will include both linear and 2D bar codes per the standard. Military Shipping Label: Military Shipment Labels may be created using the Computer Automated Transportation Tool Military Shipment Label/Issue Receipt Release Document (CATT MSL/IRRD).

HEAT TREATMENT AND MARKING OF WOOD PACKAGING MATERIALS

Wood Packaging Materials (WPM) (e.g., boxes, crates, skids, pallets, and any wood used as inner packaging made of non-manufactured wood) shall be constructed of lumber that has been heat-treated in accordance with the requirements of International Standard for Phytosanitary Measures (ISPM) –15. The WPM manufacturer shall be affiliated with an inspection agency accredited by the board of review of the American Lumber Standard Committee. The WPM manufacturer shall ensure traceability to the original source of heat treatment. Each piece of WPM shall be marked to show the conformance to the International Plant Protection Convention Standard. Certification markings shall be indelible and permanent. They may be stamped, stenciled, or branded directly onto or into the WPM. Certification marks shall be applied in a visible location on at least two opposite sides of the wood packaging product but are not required on each individual component piece of a wood packaging product. On dunnage, the marking shall be applied every 2 feet to opposite surfaces of each piece. If possible, the mark shall be visible when the dunnage is placed in the load to enable inspectors to verify the WPM's compliance without unloading or unstuffing the container. Foreign manufacturers shall have the heat treatment of WPM verified in accordance with their National Plant Protection Organization's compliance program.

ALTERNATIVES

The packaging requirements have been validated and the method of preservation/packing has proven successful in meeting the needs of the military distribution system, including undefined storage and shipment throughout the world. Tailoring of the packaging instructions may only be authorized by the packaging requirements developer. If tailored, prototype package is required to validate the sizes and fit requirements. Minor dimensional and size changes are acceptable provided email notification is provided to the packaging requirements developer. Any design changes or changes in the method of preservation that provide a cost savings without degrading the method of preservation or packing or affecting the serviceability of the item will be considered and responded to within 10 days of submission. The equipment proponent reserves the right to require testing to validate alternate preservation methods, materials, alternates, blocking, bracing, cushioning, and packing.

Source: https://assist.dla.mil -- Downloaded: 2016-12-09T23:24Z
Check the source to verify that this is the current version before use.

REUSE OF PACKAGING MATERIALS

The cushioning material and the fiberboard boxes may be reused provided:

a. There is no visible damage to material.

b. The foam cushioning has not taken a permanent set.

c. The fiberboard has no punctures, delaminating, or crushed flutes.

The water vapor proof barrier bag shall never be reused. Always use new barrier material, evacuate air from the barrier bag, and conduct a snap test after 2 hours on each bag to ensure seal is holding. All components of the wood box/crate must be present, properly secured in position, and not broken. Splits are acceptable provided the boards remain secured and not loose. When reapplying the lid, fasteners shall be placed 1/2 inch away from the previous fastener hole. Strapping shall be applied per MIL-HDBK-774.

CONTAINER REPAIR

Each long life metal reusable container will be inspected and reconditioned in accordance with TB 9-289, TB 55-8100-200-24, or SB 725-92-1 and the applicable container drawing package. Container drawings are available upon request from the packaging requirements developer. This reconditioning effort includes mandatory replacement of breather valves, humidity indicators, data plates, sealing gaskets, and desiccant, plus all shear mounts with an age factor of 5 years or older. It also includes a leak test after reconditioning, inspection and replacement of unserviceable wood skids, and touch up or total stripping and refinishing of the container surfaces with CARC paint."

E.5.3.9.2 Facilities work package **<facilwp>**. This work package shall be prepared as directed by the acquiring activity. A description of all facilities (e.g., test stands, test tracks, clean rooms, shielded rooms, or other facilities) that are required to do the maintenance work shall be included. Reference shall be provided for any specifications or standards that these facilities must meet. When approved by the acquiring activity, data from these standards may be included in this work package.

E.5.3.9.2.1 Work package identification information **<wpidinfo>**. Work package identification information is required for this work package. (Refer to 4.7.9.3.)

E.5.3.9.2.2 Work package initial setup **<initial_setup>**. Initial setup is required for this work package. (Refer to 4.7.9.4.)

E.5.3.9.3 Overhaul inspection procedures (OIPs) work package **<oipwp>**. Unless otherwise specified by the acquiring activity, OIPs shall be prepared for items that have parts with specific characteristics, wear limits, specified performance requirements, or fatigue characteristics or tolerances. A separate work package shall be provided for each item containing such parts. Within each work package, a separate OIP table or list shall be provided for each part of the item that requires a critical inspection. The OIP shall consist of the characteristics being inspected for, inspection methods, and the acceptance/reject criteria that must be met. Unless otherwise

Source: https://assist.dla.mil -- Downloaded: 2016-12-09T23:24Z
Check the source to verify that this is the current version before use.

specified by the acquiring activity, an illustration shall accompany the OIP. Illustrations for OIPs are strongly encouraged and shall only be omitted for very simple systems/parts. A reference letter may be included on the illustration to aid in locating the critical inspection characteristics of the parts.

E.5.3.9.3.1 Work package identification information **<wpidinfo>**. Work package identification information is required for this work package. (Refer to 4.7.9.3).

E.5.3.9.3.2 Work package initial setup **<initial_setup>**. Initial setup is required for this work package. (Refer to 4.7.9.4.)

E.5.3.9.3.3 Overhaul Inspection Procedures (OIPs). The OIP shall contain the characteristics being inspected for, the inspection methods being used, and the acceptance/reject criteria that must be met. Unless otherwise specified, an illustration shall accompany the OIP. Illustrations are strongly encouraged for OIPs and shall only be omitted for very simple systems/parts. A reference letter may be included in the OIP to locate the critical inspection characteristics of the parts on the illustrations. The OIPs may be contained in a table or a list. (Refer to FIGURE E-7.) References to these OIP work packages shall be included within the applicable maintenance procedural step (e.g., disassembly, reassembly, testing, etc.) or preshop analysis procedural step where they apply. The OIP is **standard information per paragraph 4.7.13.7**.

E.5.3.9.4 Depot mobilization requirements work package **<mobilwp>**. When specified and provided by the acquiring activity, the modifications, deletions, or additions to the preshop analysis or overhaul procedures required during mobilization shall be included in this work package. The data described in E.5.3.9.4.1 through E.5.3.9.4.4 shall be included (**standard information per paragraph 4.7.13.7**).

E.5.3.9.4.1 Work package identification information **<wpidinfo>**. Work package identification information is required for this work package. (Refer to 4.7.9.3.)

E.5.3.9.4.2 Work package initial setup **<initial_setup>**. Initial setup information is required for this work package. (Refer to 4.7.9.4.)

E.5.3.9.4.3 Introduction for depot mobilization requirements work package **<intro>**. The following text shall be included verbatim:

> "**DEPOT MOBILIZATION REQUIREMENTS**
>
> **INTRODUCTION**
>
> **Scope**
>
> The purpose of this work package is to streamline and accelerate the overhaul process during the mobilization of the depot.
>
> **Explanation of Mobilization Requirements**
>
> The mobilization requirements include a list of instructions for modifying preshop analysis and/or overhaul procedures. The pertinent procedures to be modified are referred to by work package number followed by the action to be taken."

Source: https://assist.dla.mil -- Downloaded: 2016-12-09T23:24Z
Check the source to verify that this is the current version before use.

E.5.3.9.4.4 Mobilization requirements **<mobilreq>**. Mobilization requirements consist of a list of actions that shall be in effect during depot mobilization. The work packages that are modified by these actions shall be noted. This data shall be provided in a standard table (**standard information per paragraph 4.7.13.7**) **<mobiltab>.** Alternatively, if the actions are already listed in another work package or packages, a statement shall be made that includes references to those actions. (Refer to FIGURE E-8 for example of mobilization requirements.)

E.5.3.9.5 QA requirements work package **<qawp>**. This work package shall be prepared and include the data described in E.5.3.9.5.1 through E.5.3.9.5.10.

E.5.3.9.5.1 Work package identification information **<wpidinfo>**. Work package identification information is required for this work package. (Refer to 4.7.9.3.)

E.5.3.9.5.2 Work package initial setup **<initial_setup>**. Initial setup is required for this work package. (Refer to 4.7.9.4.)

E.5.3.9.5.3 Statement of responsibility **<responsibility>**. The following information shall be included:

> "**STATEMENT OF RESPONSIBILITY**
>
> The depot/contractor is responsible for complying with the quality assurance requirements contained in this work package and in accordance with International Standards Organization (ISO) 9000 Series standards or equivalent. The commodity manager reserves the right to perform inspections or make changes that ensure the depot work being done meets the quality standards of the DMWR and preserves the inherent reliability of the item."

E.5.3.9.5.4 Definitions **<definitions>**. Definitions shall be prepared for all QA terms extensively used in the DMWR and NMWR. If the definitions are listed in another publication, that publication shall be referenced.

E.5.3.9.5.5 Special requirements for inspection tools and equipment **<specialreq>**. Any special requirements for the maintenance and calibration of tools and test equipment used for QA inspections shall be listed.

E.5.3.9.5.6 Certification requirements **<certreq>**. Any certification or licensing requirements for processes, procedures, materials, equipment, or personnel skills shall be listed. The list shall include appropriate standards, specifications, regulations, and/or laws that apply. The list shall reference the text in the DMWR/NMWR where a requirement exists for a soldering, welding, or magnetic particle inspection certification, radioactive substance, or test driver licenses.

E.5.3.9.5.7 Quality program **<quality-program>**. Any requirements for a quality program shall be listed.

E.5.3.9.5.8 In-process inspections **<inprocess>**. The following statement shall be included:

Source: https://assist.dla.mil -- Downloaded: 2016-12-09T23:24Z
Check the source to verify that this is the current version before use.

"**IN-PROCESS INSPECTIONS**

In-process quality assurance (QA) inspections are contained throughout the overhaul procedures of this DMWR. These inspections are immediately preceded by a statement such as "QA check" to identify them. They are the minimum inspections required. Additional QA inspections may be established by the depot or the commodity manager."

E.5.3.9.5.9 Acceptance inspections **<acceptance>**. The following statement shall be included:

"**ACCEPTANCE INSPECTIONS**

Items overhauled in accordance with this DMWR will be accepted based on the following criteria:

1. Conformance to quality of material requirements.
2. Conformance to all in-process quality assurance inspections.
3. Conformance to all final assembly testing requirements.
4. Conformance to the preservation, packaging, and marking requirements."

E.5.3.9.5.10 First article inspection **<first>**. When applicable, reference to first article inspection/test prepared for the DMWR/NMWR in accordance with ISO 9000 Series standards or equivalent shall be included.

E.5.3.10 Illustrated list of manufactured items (**Maintainer/AMC and above**). The illustrated list of manufactured items information shall be prepared when there are any items required to support maintenance or operation coded with an "M" in the source code of the SMR contained in the RPSTL. It shall contain an introduction work package (refer to E.5.3.10.1) and one or more manufacturing procedure work packages (refer to E.5.3.10.2). The manufacturing procedure work package shall identify and include technical information for each item authorized to be manufactured or fabricated by field or sustainment personnel (e.g., all "MO," "MF," "MH," and "MD" source coded items). When applicable, links may be made to fabrication instructions for tools and equipment.

E.5.3.10.1 Illustrated list of manufactured items introduction work package **<manu_items_introwp>**. The work package shall include the data described in E.5.3.10.1.1 through E.5.3.10.1.4.

E.5.3.10.1.1 Work package identification information **<wpidinfo>**. Work package identification information is required for this work package. (Refer to 4.7.9.3.)

E.5.3.10.1.2 Work package initial setup **<initial_setup>**. Initial setup is not required for this work package.

E.5.3.10.1.3 Introduction for illustrated list of manufactured items work package **<intro>**. The following introduction shall be prepared and included verbatim (italicized text within parentheses shall be replaced with the appropriate information):

Source: https://assist.dla.mil -- Downloaded: 2016-12-09T23:24Z
Check the source to verify that this is the current version before use.

"**ILLUSTRATED LIST OF MANUFACTURED ITEMS**

INTRODUCTION

Scope

This work package includes complete instructions for making items authorized to be manufactured or fabricated at the (*enter applicable maintenance level*).

How to Use the Index of Manufactured Items

A part number index in alphanumeric order is provided for cross-referencing the part number of the item to be manufactured to the information that covers fabrication criteria.

Explanation of the Illustrations of Manufactured Items

All instructions needed by maintenance personnel to manufacture the item are included on the illustrations. (*When applicable, a reference to the associated parts information TM or parts information work package shall be entered here.*) All bulk materials needed for manufacture of an item are listed by part number or specification number in a tabular list on the illustration."

E.5.3.10.1.4 Index of manufactured items **<manuindx>**. An index of P/Ns or drawing numbers shall be prepared. This index shall list P/Ns and/or drawing numbers, in alphanumeric order, along with the name of the part for all items illustrated in this work package. The work package number to the manufactured items work package containing the manufacturing instructions shall be included.

E.5.3.10.2 Manufacturing procedure work package **<manuwp>**. A work package shall be prepared for each manufactured item. It shall contain the data described in E.5.3.10.2.1 through E.5.3.10.2.3.

E.5.3.10.2.1 Work package identification information **<wpidinfo>**. Work package identification information is required for this work package. (Refer to 4.7.9.3.)

E.5.3.10.2.2 Work package initial setup **<initial_setup>**. Initial setup information is required for this work package. (Refer to 4.7.9.4.)

E.5.3.10.2.3 Instructions for manufactured items **<manuitem>**. The following shall be prepared:

a. Illustrations which contain sufficient views to portray all features of the item (as required). (Refer to FIGURE E-9.)
b. All instructions (explanatory text and list of bulk materials) needed by maintenance personnel to manufacture the item (refer to FIGURE E-9) shall supplement the illustrations and shall contain the following data:
   (1) All dimensional, location, and processing instructions needed to manufacture the item shall be included (e.g., 30 in. long, top surface, primer coating).
   (2) A description of the item to be manufactured, including the P/N and name.

Source: https://assist.dla.mil -- Downloaded: 2016-12-09T23:24Z
Check the source to verify that this is the current version before use.

(3) A list of bulk materials needed to manufacture the item shall be prepared. The list of bulk materials shall consist of the P/N, CAGEC and NSN, or specification number of the raw bulk material to be used in manufacture of the item. The list shall cite the technical characteristics (e.g., standards, specifications, conditions, dimensions, and any other pertinent data).

(4) When applicable, a reference shall be made to the associated RPSTL, RPSTL TM, or Repair Parts List work package (for combined TMs).

E.5.3.11 Torque limits work package (**Maintainer/AMC and above**) **<torquewp>**. This work package shall be prepared as directed by the acquiring activity. Information shall be prepared to provide applicable torque values **<torque>** (expressed in foot or inch pound terms and/or metric terms), data as to bolt grade markings such as SAE markings and their proper identification, and specific torque sequencing requirements. Refer to FIGURE E-10 for an example of the type of information presented in a torque limits work package. The torque data described in E.5.3.11.1 through E.5.3.11.4 shall be included.

E.5.3.11.1 Work package identification information **<wpidinfo>**. Work package identification information is required for this work package. (Refer to 4.7.9.3.)

E.5.3.11.2 Work package initial setup **<initial_setup>**. Initial setup is required for this work package. (Refer to 4.7.9.4.)

E.5.3.11.3 Introduction **<intro>**. Information shall be prepared to include the scope or how to use the work package.

E.5.3.11.4 Torque instructions **<torqueval>**. Specific instructions such as torque limits for dry and wet fasteners, fastener sizes and thread patterns, etc., shall be prepared.

E.5.3.12 Wiring diagrams and schematics work package (**Maintainer/AMC and above**) **<wiringwp>**. This work package shall be prepared as directed by the acquiring activity. It shall include wiring and cable provisions contained in the equipment/end item, including all systems or equipment which can be installed or removed later (e.g., mission-related systems/equipment). Applicability of diagrams shall be explained in relation to equipment configuration. At a minimum, the wiring data described in E.5.3.12.1 through E.5.3.12.7 shall be included.

E.5.3.12.1 Work package identification information **<wpidinfo>**. Work package identification information is required for this work package. (Refer to 4.7.9.3.)

E.5.3.12.2 Work package initial setup **<initial_setup>**. Initial setup information is not required for this work package.

E.5.3.12.3 Introduction **<intro>**. Information shall be prepared to include the scope of the work package. A statement shall be included explaining that wiring diagrams and essential wiring information are provided for all electrical and electronic systems and circuits.

E.5.3.12.3.1 Wiring diagrams index. A table which lists the wiring diagrams by foldout number and title may be included in the introduction. Wiring diagram index list shall include the sheet numbers as applicable and the page number for the foldout. Refer to MIL-HDBK-1222 for example.

Source: https://assist.dla.mil -- Downloaded: 2016-12-09T23:24Z
Check the source to verify that this is the current version before use.

E.5.3.12.4 Abbreviations **<abbrev>**. A statement shall be prepared that abbreviations are in accordance with ASME Y14.38, except when the abbreviation stands for a marking actually found in the equipment. A table listing the abbreviations used on the wiring diagram may be included on this work package. Table shall include the abbreviation and its definition. Refer to MIL-HDBK-1222 for example.

E.5.3.12.5 Component descriptions with related schematic locations table **<component_desc>**. A table may be prepared to assist user in finding components which contains component descriptions in alphabetical order, foldout sheet number, grid number, and official name which appears on the wiring diagram. Refer to MIl-HDBK-1222 for example.

E.5.3.12.6 Wire identification **<wireid>**. Identification of wires by number shall be explained. A list of circuit designators and a wire identification diagram shall be prepared. Refer to MIL-HDBK-1222 for example of wire identification table. Additional tables may be included as follows for SAE or color designations:

E.5.3.12.6.1 SAE wire designations. A table explaining the SAE wire designations used in the wiring diagrams may be included in the wiring diagrams work package. Refer to MIL-HDBK-1222 for example.

E.5.3.12.6.2 Wire color designations **<wire_color>**. As applicable, a table may be prepared which explains the color codes used on the wiring diagrams. Refer to MIL-HDBK-1222 for example.

E.5.3.12.7 Wiring diagrams **<wiringdiag>**. As specified by the acquiring activity, wiring diagrams shall be prepared for all electrical and electronic systems and circuits.

E.5.3.13 Aircraft specific maintenance work packages.

E.5.3.13.1 Preventive maintenance inspections work package **<pmiwp>**. This work package shall be prepared as directed by the acquiring activity and shall contain the requirements outlined in E.5.3.13.1.1 through E.5.3.13.1.5.

E.5.3.13.1.1 Work package identification information **<wpidinfo>**. Work package identification information is required for this work package. (Refer to 4.7.9.3.)

E.5.3.13.1.2 Work package initial setup **<initial_setup>**. Initial setup information is required for this work package. (Refer to 4.7.9.4.)

E.5.3.13.1.3 General information and introduction **<geninfo>**. The following paragraph shall be inserted (italicized text within parentheses shall be replaced with the appropriate information):

> "**GENERAL INFORMATION**
>
> This work package contains complete requirements for special inspections, overhaul and retirement schedule, and standards of serviceability applicable to the aircraft. The inspections prescribed in this work package shall be accomplished at specified periods by aviation maintenance companies, with the assistance of aviation support battalions when required. Complete Daily, Intermediate, Periodic, or Phased inspections are contained in the (*insert applicable aircraft inspection checklist TM*)."

Source: https://assist.dla.mil -- Downloaded: 2016-12-09T23:24Z
Check the source to verify that this is the current version before use.

E.5.3.13.1.4 Standards of serviceability. The following paragraph shall be inserted:

"Standards of serviceability to be used in the day-to-day inspection and maintenance of the aircraft can be found as fits, tolerances, wear limits, and specifications in the aircraft maintenance manuals. Standards of serviceability for transfer to aircraft are contained in TM 1-1500-328-23."

E.5.3.13.1.5 Special inspections.

a. Definition and general information. The following paragraph shall be inserted:

"This information supplements scheduled inspections as outlined in the applicable aircraft inspection checklists. Inspection of items that are required to be inspected at intervals not compatible with airframe operating time or airframe inspection intervals is also included. Refer to DA PAM 738-751 (Functional Users Manual for the Army Maintenance Management System-Aviation (TAMMS-A)) for applicable forms, records, and worksheets required for these inspection intervals. Typical examples of this type of inspection are as follows:

(1) Inspections which are solely contingent upon specific conditions or incidents that occur (e.g., hard landings, over speed, or sudden stoppage), wherein immediate inspection is required to ensure safe flight.

(2) Inspection of components or airframe on a calendar basis, e.g., first aid kits, weight and balance check, aircraft inventory."

b. Requirements. Components and other items which qualify under the criteria for special inspections, as detailed previously, or over speed shall be included. These inspections shall be grouped under specific aircraft areas. A line drawing of the aircraft or accessory showing sequence for inspection by area shall be included. The area identified shall include all surfaces, materials, components, and equipment pertaining to that specific location. The following inspection data entries shall be included, as applicable. The information entries shall be placed in a table (**standard information per paragraph 4.7.13.7**) **<pmi.pecul.tab>**.

(1) Aircraft serial or tail number **<serialno>**.

(2) Date of inspection **<date>**.

(3) Area number **<areano>**.

(4) Inspection number **<itemno>**.

(5) Inspection interval **<interval>**.

(6) Name of component being inspected **<compname>**.

(7) Inspection procedure **<proc>**.

E.5.3.13.2 Aircraft inventory master guide work package **<inventorywp>**. This work package shall be prepared as directed by the acquiring activity. Information shall be prepared on standard inventory procedures to allow determination of inventoriable items of installed and loose equipment authorized and required by the specific aircraft in performance of its mission. The inventory data described in E.5.3.13.2.1 through E.5.3.13.2.6 shall be included.

Source: https://assist.dla.mil -- Downloaded: 2016-12-09T23:24Z
Check the source to verify that this is the current version before use.

E.5.3.13.2.1 Work package identification information **<wpidinfo>**. Work package identification information is required for this work package. (Refer to 4.7.9.3.)

E.5.3.13.2.2 Work package initial setup **<initial_setup>**. Initial setup information is required for this work package. (Refer to 4.7.9.4.)

E.5.3.13.2.3 Introduction **<intro>**. A short explanation of the scope and purpose of the work package shall be prepared. Information pertaining to the necessary steps to ensure the list is accurate, exact, and complete (e.g., research of authorized changes, Modification Work Orders (MWOs), additions/deletions for special mission requirements) shall be included. The introduction shall include a reference to DA PAM 738-751 for applicable forms and records.

E.5.3.13.2.4 Security **<security>**. It shall be stated here that aircraft inventory records should be unclassified, but, if necessary, any classification of the contents shall be in accordance with the existing security regulations.

E.5.3.13.2.5 Inventoriable items **<inventoriable>**. The selection of inventoriable items to be listed is to be without regard to the agency (governmental or contractual) furnishing the items.

a. Items to be listed are as follows:
   (1) Items essential to the execution of the designated mission of the aircraft, such as electronic, photographic, armament, special mission instruments, and safety and comfort equipment.
   (2) Loose equipment delivered with the aircraft and items subject to pilferage or readily converted to personal use.
   (3) Modification kits which are reissued or distributed to using organizations for installation and which are not immediately placed in use. These shall be recorded on the affected aircraft's DA Form 2408-17, Aircraft Inventory Record, and identified as loose equipment until modification is completed.
   (4) Equipment required for operation in a specific environment.
b. Items to be excluded are as follows:
   (1) Nonaccountable items coded as expendable in the applicable stock lists.
   (2) Personal issue or items furnished on unit allowance or other authority.
   (3) Items or components considered as basic or integral parts of the airframe or basic aircraft, such as engines, propellers, wheels, and standard instruments.
   (4) Equipment publications, checklists, and aircraft forms.

E.5.3.13.2.6 Periods of inventory **<prdinv>**. The following text shall be included verbatim:

"**PERIODS OF INVENTORY**

Inventoriable items shall be checked against the Aircraft Inventory Record, DA Form 2408-17, at the following periods:

1. Upon receipt.
2. Before transfer of the aircraft to another organization.
3. Upon placing aircraft in storage and upon removal from storage. Aircraft need not be inventoried while in storage.
4. Twelve months after last inventory."

Source: https://assist.dla.mil -- Downloaded: 2016-12-09T23:24Z
Check the source to verify that this is the current version before use.

E.5.3.13.3 Storage of aircraft work package **<storagewp>**. The stowage of aircraft work package(s) shall be prepared as directed by the acquiring activity. Information described in E.5.3.13.3.1 through E.5.3.13.3.4 shall be included.

E.5.3.13.3.1 Work package identification information **<wpidinfo>**. Work package identification information is required for this work package. (Refer to 4.7.9.3.)

E.5.3.13.3.2 Work package initial setup **<initial_setup>**. Initial setup information is required for this work package. (Refer to 4.7.9.4.)

E.5.3.13.3.3 General information for storage of aircraft work package **<geninfo>**. The following text shall be included verbatim:

"**STORAGE OF AIRCRAFT**
GENERAL INFORMATION

Components Involved in an Accident

Any component removed for reason of accident shall not be preserved, but shall be shipped in the same condition it was in after the accident.

Categories of Storage

1. Flyable storage - no time limit.
2. Short term (administrative storage) - 1 to 45 days.
3. Intermediate storage - 46 to 180 days."

E.5.3.13.3.4 Flyable storage **<flyable>**, short term storage **<short>**, and intermediate storage **<intermediate>**.

a. A general discussion shall be prepared for each category of aircraft storage, to include considerations for selection of the appropriate category (e.g., ground operation, motoring of engines, and other required maintenance for which personnel and materials are needed) and steps to be taken for care of the aircraft during exceptionally wet weather.
b. For each category of aircraft storage, all essential information shall be prepared to include all procedures for preparing the complete aircraft for storage and removal from storage. It shall exclude any information on when or why the aircraft is stored. Each category of storage shall make reference to inspection documents and inspection procedures to be conducted before, during, and after storage.

E.5.3.13.4 Weighing and loading work package **(ASB only) <wtloadwp>**. The weighing and loading work package(s) shall be prepared. It shall provide description, information, and procedures for aircraft weighing, balancing, and loading. The data described in E.5.3.13.4.1 through E.5.3.13.4.5 shall be included.

E.5.3.13.4.1 Work package identification information **<wpidinfo>**. Work package identification information is required for this work package. (Refer to 4.7.9.3.)

E.5.3.13.4.2 Work package initial setup **<initial_setup>**. Initial setup is required for this work package. (Refer to 4.7.9.4.)

Source: https://assist.dla.mil -- Downloaded: 2016-12-09T23:24Z
Check the source to verify that this is the current version before use.

E.5.3.13.4.3 General information **<geninfo>**. The following text shall be included verbatim:

"**WEIGHING AND LOADING**

GENERAL INFORMATION

Scope

This work package contains description, information, and procedures for aircraft weighing and loading."

E.5.3.13.4.4 Weighing information **<formchart>**. Instructions shall be included for preparing the aircraft, weighing the aircraft in the basic weight condition, performing calculations, and using and recording data on DD Form 365-1 (Basic Weight Checklist) and DD Form 365-2 (Aircraft Weighing Record). Instructions shall include setup requirements, procedures for positioning the aircraft in the weighing area, and assembly of the aircraft weighing equipment. Illustrations shall be prepared to support the text, including a two-view chart diagram. (Refer to FIGURE E-11.) A reference may be made to TM 55-1500-342-23 for additional information governing weight and balance of aircraft, forms, and records.

E.5.3.13.4.5 Loading information **<weightinst>**. Descriptions and instructions shall be prepared for aircraft loading and for computing weight and balance information. Sufficient information and data shall be provided so that an aviator, knowing the basic weight and moment of the aircraft, can compute any combination of weight and balance using the prescribed charts and forms. Reference shall be made to AR 95-1, DA PAM 738-751, and TM 55-1500-342-23 for additional information governing weight and balance of aircraft, forms, and records. Data shall include fundamental principles of loading. An illustration of aircraft compartments and stations shall be included. Reference shall be made to DD Form 365-1 for a more complete listing of compartments and equipment that comprise the basic weight of the aircraft. Loading information shall include weight and balance characteristics, center of gravity limits, weight/balance and loading, and weight and moment tables for load items such as crew, fuel, cargo, and armament.

E.5.3.14 Auxiliary equipment maintenance work package **<auxeqpwp>**. When auxiliary equipment (e.g., Modified Tables of Organization and Equipment (MTOE) items, etc.) maintenance TMs are not procured for peculiar equipment furnished by the contractor, separate maintenance work packages shall be prepared for each maintenance task.

E.5.3.14.1 Work package identification information **<wpidinfo>**. Work package identification information is required for this work package. (Refer to 4.7.9.3.)

E.5.3.14.2 Work package initial setup **<initial_setup>**. Initial setup is required for this work package. (Refer to 4.7.9.4.)

E.5.3.14.3 Auxiliary equipment procedures **<maintsk>/<proc>**. Concise step-by-step instructions shall be prepared for proper care of auxiliary equipment while in and out of service. There shall be work packages for each of the following tasks:

a. Storage.
b. Preventive maintenance.

Source: https://assist.dla.mil -- Downloaded: 2016-12-09T23:24Z
Check the source to verify that this is the current version before use.

c. Lubrication.

d. Operating checks.

e. Adjustments.

f. Maintenance instructions **<maintsk>** (refer to E.5.3.5.3) for special tools that have been fabricated (refer to E.5.3.10).

E.5.3.15 Ammunition specific work packages.

E.5.3.15.1 Ammunition maintenance work package **<ammowp>**. This work package shall be prepared as directed by the acquiring activity and shall reference or contain (in separate work packages) the following information as presented in E.5.3.15.1.1 through E.5.3.15.1.5.

E.5.3.15.1.1 Work package identification information **<wpidinfo>**. Work package identification information is required for this work package. (Refer to 4.7.9.3.)

E.5.3.15.1.2 Work package initial setup **<initial_setup>**. Initial setup is required for this work package. (Refer to 4.7.9.4.)

E.5.3.15.1.3 Care and handling. Concise step-by-step instructions required for the care and handling of ammunition shall be prepared. These shall include hazard distances, storage, special requirements, prevention of deterioration due to rough handling, exposure to adverse weather conditions, or any other hazards that may be encountered. Visual inspection criteria shall be prepared to determine item serviceability.

E.5.3.15.1.3.1 Ammunition markings **<mark>**. Instructions shall be prepared for marking ammunition and ammunition containers. (Refer to E.5.3.5.3.16.)

E.5.3.15.1.3.2 Classification of defects **<ammo.defect>**. Instructions shall be prepared for performing visual inspection of ammunition received from the ammunition supply facility. Instructions shall be prepared for performing visual inspection and a condition check of the shipment of ammunition/containers (pallets, boxes, etc.) and shall include classification and disposition of defective ammunition/containers.

E.5.3.15.1.3.3 Handling **<ammo.handling>**. Instructions shall be prepared for handling ammunition.

E.5.3.15.1.3.3.1 Unpacking **<unpack>**. As a minimum, the following information shall be prepared:

a. Any special sequence of action necessary to protect the ammunition.

b. If a specially designed, reusable container is involved for either the end item or components that are authorized for replacement, instructions shall be prepared to report or reenter the empty container through supply channels.

E.5.3.15.1.3.3.2 Packing **<pack>**. As a minimum, the following information shall be prepared:

a. Any special sequence of action necessary to protect the ammunition.

b. Instructions shall be prepared on how to package defective ammunition.

E.5.3.15.1.4 Defective **<ammo.defect>**. Instructions shall be prepared for disposition of defective ammunition. (Refer to E.5.3.2.3.9.2.)

Source: https://assist.dla.mil -- Downloaded: 2016-12-09T23:24Z
Check the source to verify that this is the current version before use.

E.5.3.15.1.5 Cleaning and painting **<clean>** or **<paint>**. Use of cleaning materials and paint authorized for use in the specified maintenance operations.

E.5.3.15.2 Ammunition marking information work package **<ammo.markingwp>**. This work package shall be prepared as directed by the acquiring activity. It shall provide applicable information on ammunition marking **<mark>** (refer to E.5.3.5.3.16), classification, identification **<ammotype>**, care and handling, preservation, transportation, authorized rounds, preparation for firing, fuzes, and packing **<pack>** (refer to E.5.3.5.3.17). Reusable original packaging and containers shall be identified for return or temporary storage of ammunition in its original configuration. Information on classifying, identifying, caring for, handling, etc., non-ammunition Class V items shall be prepared, when applicable. Individual paragraphs shall be prepared for each ammunition type/classification.

E.5.3.15.2.1 Work package identification information **<wpidinfo>**. Work package identification information is required for this work package. (Refer to 4.7.9.3.)

E.5.3.15.2.2 Work package initial setup **<initial_setup>**. Initial setup is required for this work package. (Refer to 4.7.9.4.)

E.5.3.15.3 Foreign ammunition (NATO) work package **<natowp>**. A work package to describe foreign ammunition shall be prepared when applicable. The requirements of E.5.3.15.2 shall apply.

E.5.3.15.3.1 Work package identification information **<wpidinfo>**. Work package identification information is required for this work package. (Refer to 4.7.9.3.)

E.5.3.15.3.2 Work package initial setup **<initial_setup>**. Initial setup is required for this work package. (Refer to 4.7.9.4.)

E.5.3.16 Preventive maintenance services/Preventive maintenance daily inspection work packages **(aircraft preventive maintenance services/preventive maintenance daily only) <pms-inspecwp>**. A work package shall be developed for each specific inspection interval (e.g., daily, intermediate, periodic, 10 hour/14 day, 30 hr/42 day, etc.), as applicable to the aircraft. Inspection checklists shall be divided by areas of the aircraft (e.g., nose, fuselage, tail, etc.). All items requiring inspection shall be listed in the logical sequence of inspection that would require a minimum of time and motion on the part of the individual performing the inspection. The checklist data shall be formatted and delivered to support the inspection requirements in DA PAM 738-751.

E.5.3.16.1 Work package identification information **<wpidinfo>**. Work package identification information is required for this work package. (Refer to 4.7.9.3.)

E.5.3.16.2 Work package initial setup **<initial_setup>**. Initial setup information is required for this work package. (Refer to 4.7.9.4.)

E.5.3.16.3 Actuation warning. The following warning shall appear before the first step of the procedure (italicized text within parentheses shall be replaced with the appropriate information):

Source: https://assist.dla.mil -- Downloaded: 2016-12-09T23:24Z
Check the source to verify that this is the current version before use.

WARNING

Accidental actuation of the aircraft power plant or hydraulic system, or (*insert aircraft specific equipment as applicable, e.g., firing of armament, jettison ballistics*) may cause severe injury or death. Before starting inspection, the aircraft safety check must be performed, if applicable IAW (*insert specific technical manual here) (if applicable the following statement may be inserted here "and all armament must be safetied, deactivated, and cleared (insert technical manuals here)."*

E.5.3.16.4 Mandatory safety-of-flight inspection items. Mandatory safety-of-flight inspection items shall be highlighted. Mandatory safety of flight inspection items shall have WARNING on the WARNING SUMMARY page at the front of the manual. The WARNING shall be verbatim as follows:

"CSI WARNING

Certain inspections are mandatory Safety of Flight requirements, and the inspection intervals cannot be exceeded. In the event these inspections cannot be accomplished at the specified interval, the aircraft condition status symbol will be immediately changed to a red X."

E.5.3.16.5 Area diagram. An area diagram of the aircraft, showing sequences for inspection by area shall be included. The area identified shall include all surfaces, material, components and equipment pertaining to that specific location. (Refer to FIGURE E-12 (PMD) and FIGURE E-13 (PMS).)

E.5.3.16.6 Standard checklists. If applicable, the standard inspection checklist shall be further divided into Power Off checks and Power On checks.

a. The following statement shall be the first item for each aircraft. It shall read: “Inspect aircraft forms and records for recorded discrepancies (DA PAM 738-751, Functional Users Manual for the Army Maintenance Management System Aviation (TAMMS-A)).”
b. The work packages shall be divided into the proper sequence of steps as outlined in the area diagrams. For PMD manuals, there shall be one work package for each inspection area.
c. The following statement shall be the final procedure of the checklist: "Inspect for foreign object damage and ensure all access panels or doors opened or removed for this inspection are closed or reinstalled."

E.5.3.17 Phased maintenance inspection work package **(aircraft phased maintenance checklist only) `<pmi-cklistwp>`**. Phased maintenance inspection data shall be prepared and shall include the information described in E.5.3.17.1 through E.5.3.17.4.

E.5.3.17.1 Work package identification information **`<wpidinfo>`**. Work package identification information is required for this work package. (Refer to 4.7.9.3.)

E.5.3.17.2 Work package initial setup **`<initial_setup>`**. Initial setup information is required for this work package. (Refer to 4.7.9.4.)

Source: https://assist.dla.mil -- Downloaded: 2016-12-09T23:24Z
Check the source to verify that this is the current version before use.

E.5.3.17.3 Inspection area diagrams **<figure>**. Diagrams locating the inspection areas and the access doors and panels that require removal at various phased maintenance inspections of the aircraft shall be included. (Refer to FIGURE E-14 and FIGURE E-15.)

E.5.3.17.4 Phased maintenance checklist. The phased maintenance checklist shall include all the inspection steps required to complete the given inspection. It may contain illustrations to aid in the performance of the inspection. Inspection steps shall be organized in a logical flow to minimize inspector movement. The inspection data shall be formatted and presented to support the inspection requirements in DA PAM 738-751. The work package shall begin with the following note:

"NOTE

Before start of the Phased Maintenance Inspection, it is recommended that a pre-inspection maintenance test flight (MTF) be conducted. Accomplishment of the MTF shall be determined by the unit maintenance officer. The pre-inspection MTF should be conducted by a maintenance test pilot following a review of the aircraft forms and records and a briefing from the crew of the aircraft. The MTF is recommended to assess the aircraft performance and identify deficiencies that should be corrected while the aircraft is undergoing phased maintenance inspections."

E.6 **NOTES.**

The notes in section 6 apply to this appendix.

Source: https://assist.dla.mil -- Downloaded: 2016-12-09T23:24Z
Check the source to verify that this is the current version before use.

MAINTAINER MAINTENANCE SERVICE UPON RECEIPT

INITIAL SETUP:

Tools and Special Tools
Measuring Tape (WP 0240, Item 3)

References
WP 0125

References (cont.)
WP 0128
SF 361, Transportation Discrepancy Report

Checking Unpacked Equipment

Inspect the equipment for damage incurred during shipment.

If the equipment has been damaged, report the damage on DD Form 361, Transportation Discrepancy Report. Check the equipment against the packing slip to see if the shipment is complete. Report all discrepancies in accordance with DTR 4500.9-R, Part II.

Check to see of the equipment has been modified.

TABLE 1. Inspection Criteria for Packaging

COMPONENT	ACCEPTABLE	REPARABLE	NONREPARABLE
Wooden Boxes and Crates			
Hardware	Operative and tight. Nails, screws, and fasteners.	Inoperative or loose. Nails, screws, and fasteners.	None. None.
Ends	Free from damage.	Broken or missing cleats and handles.	Damage that requires disassembly of box.
Wood	Splits less than 3 inches long, no closer than 1 inch to edge of board or adjoining split. The board must be secured by at least one nail on each side of the split when it extends to the edge of the board.	Splits no more than 3 inches but no closer than 1 inch to edge of board or adjoining split, or ½-inch wide, that can be repaired by use of corrugated fasteners.	Splits closer than 1 inch to edge of board or adjoining split or over ½-inch wide.
Fiber Containers			
Metal Ends	Minor rust, cracks, indentations, or splits that would not impair waterproofing or serviceability of container.	None.	Perforations, excessive rust, or ends which are crushed or not securely crimped to body.
Body and Cap	No leaks, cuts, or gouges.	Cuts, tears, or gouges not closer than 1 inch to closure, less than ½ square inch in area, and un-penetrated layers that can be spot-painted.	Cuts, tears, or gouges closer than 1 inch to closure, more than ½ square inch in area, or through all impregnated layers.

FIGURE E-1. Example of packaging inspection/service upon receipt.

Source: https://assist.dla.mil -- Downloaded: 2016-12-09T23:24Z
Check the source to verify that this is the current version before use.

TABLE 2. M29 and M30 Control Surfaces and Containers

LOCATION	ITEM	ACTION	REMARKS
Container	Components	1. Inspect for rust, fungus, paint damage, and deformation. 2. Reject container if damage prevents it from functioning properly.	WP 0125 —
M29	Control Surfaces	1. Inspect for dents and scratches on post, trailing edge phenolic, skin and closure plate. 2. Reject control surface: a. If post dents or scratches exceed 0.002 in. (0.051 mm). b. If trailing edge phenolic dents exceed 0.040 in. (10.160 mm). c. If skin dents exceed 0.030 in. (7.620 mm) within 2 in (50.800 mm) of post. d. If closure plate dents exceed 0.030 in. (7.620 mm) within 2 in (50.800 mm) of post.	WP 0128 —
M30	Control Surfaces	1. Inspect for dents and scratches on post and skin. 2. Skin dents or scratches up to 0.050 in. (12.700 mm) are allowable, but should be blended. 3. Reject control surface if post dents or scratches exceed 0.002 in. (0.051 mm).	— — —

END OF WORK PACKAGE

FIGURE E-1. <u>Example of packaging inspection/service upon receipt</u> - Continued.

Source: https://assist.dla.mil -- Downloaded: 2016-12-09T23:24Z
Check the source to verify that this is the current version before use.

TM X-XXXX-XXX-XX 0029

CREW MAINTENANCE
PREVENTIVE MAINTENANCE CHECKS AND SERVICES

TABLE 1. PMCS for Models MHE-270/MHE-271

ITEM NO.	INTERVAL	MAN HOURS	ITEM TO BE CHECKED OR SERVICED	PROCEDURE	NOT MISSION CAPABLE IF:
1	Before		Truck exterior	Check for oil, fuel, coolant, and hydraulic oil leaks	Any Class III leaks are evident
2	Before		Truck exterior	Check the Cab/Rollover Protective Structure (ROPS) / Falling Object Protective Structure (FOPS), and vehicle frame for obvious damage, bent weldments, cracked welds, loose or missing parts, and mounting hardware.	Structural members are bent or welds are cracked. Parts are missing or damaged.
3	Before		Truck exterior	Check exterior wiring and connectors for secure mounting and frayed, broken, or burned wires.	Wiring is frayed, broken, or burned.
4	Before		Mast Assembly	Check for obvious damage, bent weldments, cracked welds, broken or missing chains, loose mounting hardware, or missing parts.	Structural members are bent or welds are cracked. Parts are missing or damaged.
5	Before		Mast Assembly	Check for rocks or other debris lodged in hoses or hose roller guides. Remove debris.	Hoses or guides are damaged.
6	Before		Mast Assembly	Check for hydraulic leaks	Any Class III leaks are evident
7	Before		Rotate Carriage	Check upper rotate carriage retainer for buildup of grease. Remove excess grease.	Grease buildup exists.
8	Before		Tires	Check for wear, cuts, cracks, gouges, abrasion, low or flat tires, and correct pressure 45 PSI (310 kPa).	Obvious low tire inflation. One or more tires unserviceable.
9	Before		Wheels	Check for damage and loose or missing mounting nuts.	Obvious damage, loose or missing mounting nut.

0029-3

FIGURE E-2. Example of a PMCS table.

Note: Man-hour column is optional and may be omitted if there are no lubrication instructions combined with the PMCS.

Source: https://assist.dla.mil -- Downloaded: 2016-12-09T23:24Z
Check the source to verify that this is the current version before use.

Table 2. Requirements for XXX System

System	MTBF	MTR	Ao
Track	500 mi	30 min	0.89
Engine	70 hr	43 min	0.92
Hull	1,000 mi	80 min	0.86
Radio	400 hr	10 min	0.95
Night Sight	145 hr	10 min	0.88
Gun Tube	10,000 rds	45 min	0.95

Table 3. Maintenance Ratio for XXX System 0.35

Maintainer	Below Depot	Depot
0.05	0.08	0.07

EXAMPLE OF TABULAR RAM DATA

Requirements for XXX System

Maintainability

When maintenance procedures shown in the technical manuals are followed, the mature maintainability data are as follows:

1. Mean Operator Preventive Maintenance Time shall not exceed 0.25 man-hours per mission. This time shall not be included in organizational preventive maintenance time.
2. Maximum operator Corrective Maintenance Time shall not exceed 1.00 man-hours per mission without being classified as a mission failure.
3. The ratio of total corrective and maintainer preventive maintenance man-hours to operating hours shall not exceed 0.10.
4. The ratio of total maintainer preventive maintenance man-hours to total operating hours shall not exceed 0.04.
5. The ratio of total corrective maintenance man-hours to operating hours shall not exceed 0.06.
6. Mean man-hours to perform a corrective maintenance action shall not exceed 2.5.
7. The Mean Time Between Corrective Maintenance Actions shall not be less than 150 operating hours.
8. The engine shall have an 80 percent probability of not requiring replacement in 20,000 miles of operation.
9. The gun tube shall have an 80 percent probability of not requiring replacement in 50,000 rounds of operation.
10. The truck shall have a 92 percent probability of not requiring replacement in 5,450 miles of operation.

EXAMPLE OF NARRATIVE RAM DATA

FIGURE E-3. Example of tabular and narrative reliability, availability, and maintainability data.

Source: https://assist.dla.mil -- Downloaded: 2016-12-09T23:24Z
Check the source to verify that this is the current version before use.

INSPECTION

Table 1. Inspection Criteria for Metal Boxes.

COMPONENT	ACCEPTABLE	REPARABLE	WP NO. WITH CORRECTIVE ACTION	IRREPARABLE
BODY AND COVER	No pitting or rust	Pitting or rust which can be removed	WP 0055	Rusted through
	Separator present and intact	Separator broken	WP 0035	N/A
MARKING	Legible and correct	Illegible or incorrect	WP 0046	N/A

END OF WORK PACKAGE

FIGURE E-4. Example of classification of materiel defects.

Source: https://assist.dla.mil -- Downloaded: 2016-12-09T23:24Z
Check the source to verify that this is the current version before use.

OVERHAUL AND RETIREMENT SCHEDULE - CONTINUED

Table 1. Overhaul and Retirement Schedule

PART NAME	PART NUMBER/ CAGEC	OVERHAUL INTERVAL HOURS	OVERHAUL INTERVAL NOTES	RETIREMENT INTERVAL HOURS	RETIREMENT INTERVAL NOTES
*Clutch Assembly	7–311310003 (02771)	1,000		4,500	
	7–31131003–3 (02771)	1,000		14,500	
	7–31131003–7 (02771)	1,000		14,500	
	7–31131003–9 (02771)	1,000		14,500	
Main Rotor Drive Shaft	7–211350021 (02781)			5,400	1
	7–211350021–3 (02781)			5,400	1
Main Rotor Drive Plat	7–211310098–5 (02771)			5,400	
	7–211310098–7 (02771)			5,400	
	7–211310098–9 (02771)			5,400	
	7–211310098–11 (02771)			5,400	
Nose Gearbox Assembly, LH	7–311320001–3 (02831)			4,500	
	7–311320001–5 (02831)			4,500	
Quill Shaft Assembly	7–211320093 (02731)			4,500	
Nose Gearbox Assembly, RH	7–311320001–4 (02731)			4,500	
	7–311320001–6 (02731)			4,500	

END OF WORK PACKAGE

FIGURE E-5. Example of an overhaul and retirement schedule.

Source: https://assist.dla.mil -- Downloaded: 2016-12-09T23:24Z
Check the source to verify that this is the current version before use.

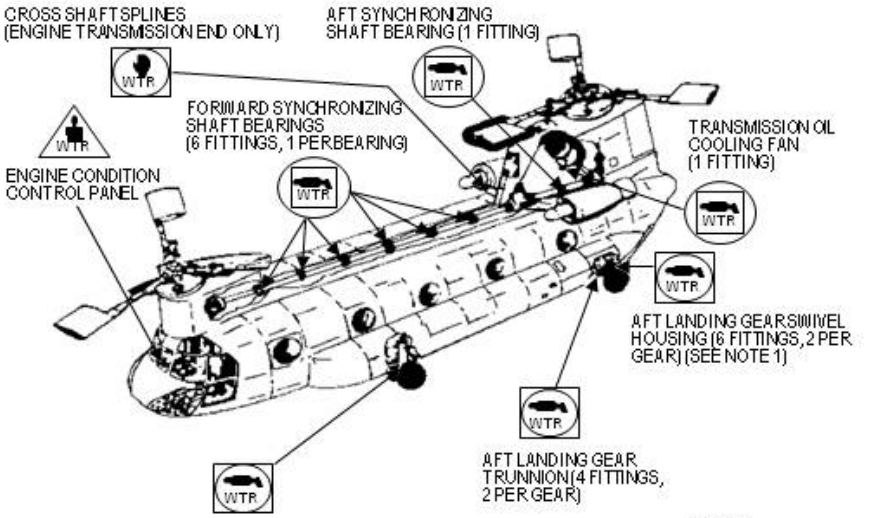

NOTES

1. CODE C AND D, X.1, AND 63.7900 THRU 63-7921 WITHOUT HIGH FLOATATION LANDING GEAR HAVE 4 FITTINGS (2 PER GEAR).
2. LUBRICATION INTERVAL SHOWN IS FOR AVERAGE CONDITIONS. MORE FREQUENT LUBRICATION MAY BE NECESSARY UNDER EXTREMELY DUSTY CONDITIONS.

TABLE OF LUBRICANTS		
IDENTI-FICATION LETTER	SPECIFICATION	TYPE OF LUBRICANT
WTR	MJL-G-813228 (C221)	GREASE, AIRCRAFT, GENERAL PURPOSE, WIDE TEMPERATURE RANGE

SYMBOLS	FREQUENCY	METHOD OF APPLICATION
□	25 Hours	GREASE GUN
○	100 Hours	BRUSH
△	500 Hours	HAND

FIGURE E-6. <u>Example of a lubrication chart</u>.

Source: https://assist.dla.mil -- Downloaded: 2016-12-09T23:24Z
Check the source to verify that this is the current version before use.

TM X-XXXX-XXX-XX 0280

DEPOT MAINTENANCE
SPUR GEAR FOR
OVERHAUL INSPECTION PROCEDURES

INITIAL SETUP:

References
WP 0252

Table 1. Overhaul Inspection Procedures for Spur Gear (Figure 4, Item 5)

QA REQ	NO.	REF LTR	CHARACTERISTIC	INSP METHOD	REQUISITE
NO	1		Serviceability	Visual/measure	Examine for nicks, gouges, burrs, and corrosion, identified below repair damaged areas, 0.020 inch (0.508mm) or less deep, by blending.
YES	2		Metal fatigue	Magnetic particle inspection	No fractures or cracks.
YES	3	A	Tooth wear	visual	No pitting, scuffing, scoring, metal flow, or wear steps allowed.
YES	4	B	Journal wear	Measure	Minimum diameter, 0.9841 inch (24.99mm). Repair (WP 0252).

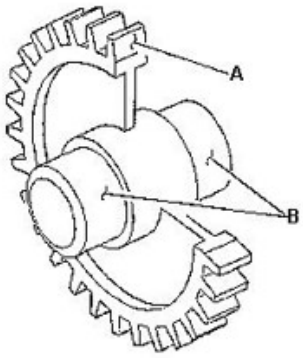

Figure 1. Spur Gear.

END OF WORK PACKAGE

0280-1/blank

FIGURE E-7. Example of an OIP table.

Source: https://assist.dla.mil -- Downloaded: 2016-12-09T23:24Z
Check the source to verify that this is the current version before use.

Table 1. Mobilization Requirements

WORK PACKAGE	ACTION
WP 0088	Materials and Fabrication, Step 6. Add "Depending on the urgency of requirements, availability of materials, and fabrication lead time, provisions of this work package may be relaxed. When that occurs, any practical method may be used to inscribe or attach the data to the equipment, i.e., decals."
WP 0090	Cleaning, Step 3. Add "Clean only to the extent necessary to perform preshop analysis."
WP 0092	Cleaning, Step 8. Add "Clean only to the extent necessary to inspect components."
WP 0098	Painting, Step 3. Add "Painted surfaces will be treated for corrosion and scratches that expose bare metal. Touch-up painting need not correlate in hue and gloss."
WP 0099	Delete

END OF WORK PACKAGE

FIGURE E-8. Example of depot mobilization requirements.

Source: https://assist.dla.mil -- Downloaded: 2016-12-09T23:24Z
Check the source to verify that this is the current version before use.

Flange Holder

1. Fabricate the flange holder form 0.50 in. (12.7 mm) thick mild steel stock.
2. Using torch, cut steel stock to dimensions shown in Figure 12.
3. Using a grinder, remove all rough edges.

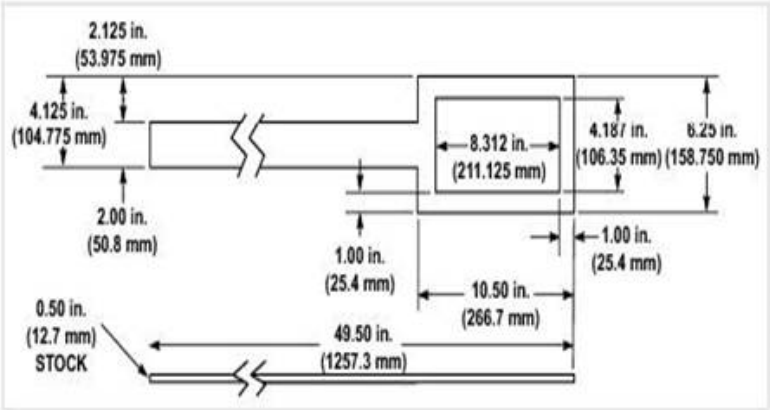

Figure 12. Dimensions for flange holder.

0291-3

FIGURE E-9. <u>Example of an illustrated list of manufactured items.</u>

Source: https://assist.dla.mil -- Downloaded: 2016-12-09T23:24Z
Check the source to verify that this is the current version before use.

TM X-XXXX-XXX-XX 0115

MAINTAINER MAINTENANCE
2 Kw mep-501a/531a MILITARY TACTICAL GENERATOR SETS
TORQUE LIMITS

HOW TO USE TORQUE TABLES

1. Measure the diameter of the screw you are installing.

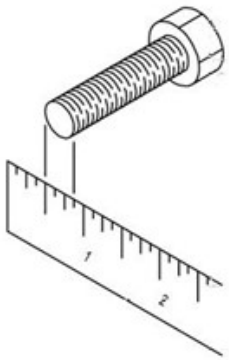

Figure 1. Measuring Screw.

2. Under the heading DIA. INCHES or MM, look down the left hand column until you find the diameter of the screw you are installing.

CAPSCREW HEAD MARKINGS

Manufacturer's marks may vary.
These are all SAE Grade 5 (3-line).

Metric screws are of three grades:
8.8, 10.9, and 12.9. Grades and manufacturer's marks appear on the screw head.

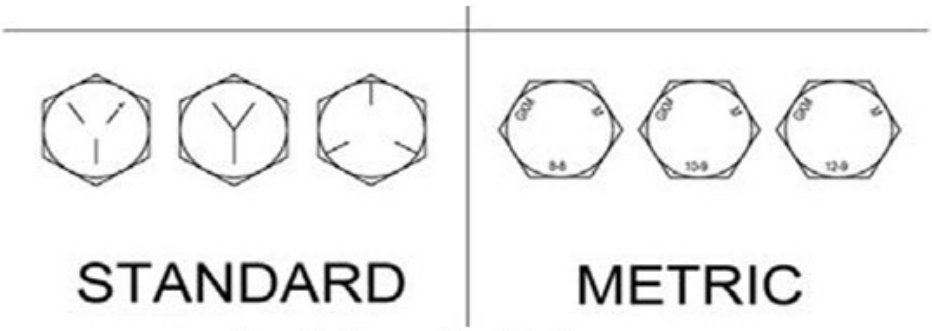

Figure 2. Capscrew Head Markings.

3. To Find the grade screw you are installing, match the markings on the head to the correct picture of capscrew Head Markings at the top of the torque table.
4. Look down the column under the picture you found in step 3 until you find the torque limit (FT●LB or N●M) for the diameter screw you are installing.

0115-1

FIGURE E-10. Example of torque limits data.

Source: https://assist.dla.mil -- Downloaded: 2016-12-09T23:24Z
Check the source to verify that this is the current version before use.

Table 1. Torque limits for Steel Fasteners.

	STANDARD			METRIC		
Size	SAE Grade 5	SAE Grade 5	SAE Grade 5	8.8	10.9	12.9
Dia. (inches)	Torque					
4-40	6 in●lb	6 in●lb	6 in●lb	0.68 N●m	0.68 N●m	0.68 N●m
6-32	11 in●lb	11 in●lb	11 in●lb	1.2 N●m	1.2 N●m	1.2 N●m
8-32	20 in●lb	20 in●lb	20 in●lb	2.3 N●m	2.3 N●m	2.3 N●m
10-32	32 in●lb	32 in●lb	32 in●lb	3.6 N●m	3.6 N●m	3.6 N●m
1/4-20	75 in●lb	75 in●lb	75 in●lb	8.5 N●m	8.5 N●m	8.5 N●m
5/16-18	140 in●lb	140 in●lb	140 in●lb	15.8 N●m	15.8 N●m	15.8 N●m
3/8-16	31 ft●lb	31 ft●lb	31 ft●lb	42 N●m	42 N●m	42 N●m
1/2-13	75 ft●lb	75 ft●lb	75 ft●lb	101.7 N●m	101.7 N●m	101.7 N●m

Torque values shown are for nut-screw combinations that have not been plated or have not had special lubricants applied to them. Discount the residual lubricant present that was applied during manufacture.

FIGURE E-10. Example of torque limits data - Continued.

Source: https://assist.dla.mil -- Downloaded: 2016-12-09T23:24Z
Check the source to verify that this is the current version before use.

Table 2. Torque Limits for Brass Fasteners.

	STANDARD			METRIC		
Size	SAE Grade 5	SAE Grade 5	SAE Grade 5	8.8	10.9	12.9
Dia. (inches)	Torque					
1/4-20	50 in●lb	50 in●lb	50 in●lb	5.6 N●m	5.6 N●m	5.6 N●m
1/2-13	35 ft●lb	35 ft●lb	35 ft●lb	47.5 N●m	47.5 N●m	47.5 N●m

Torque values shown are for nut-screw combinations that have been plated or have had lubricant applied.

Table 3. Torque Limits for Metric Fasteners into Steel.

	STANDARD			METRIC		
Size	SAE Grade 5	SAE Grade 5	SAE Grade 5	8.8	10.9	12.9
Dia. (inches)	Torque					
M6 x 1	7.3 ft●lb	7.3 ft●lb	7.3 ft●lb	9.9 N●m	9.9 N●m	9.9 N●m
M8 x 1.25	18 ft●lb	18 ft●lb	18 ft●lb	24.4 N●m	24.4 N●m	24.4 N●m
M10 x 1.5	35 ft●lb	35 ft●lb	35 ft●lb	47.5 N●m	47.5 N●m	47.5 N●m

END OF WORK PACKAGE

0115-3/blank

FIGURE E-10. <u>Example of torque limits data</u> - Continued.

Source: https://assist.dla.mil -- Downloaded: 2016-12-09T23:24Z
Check the source to verify that this is the current version before use.

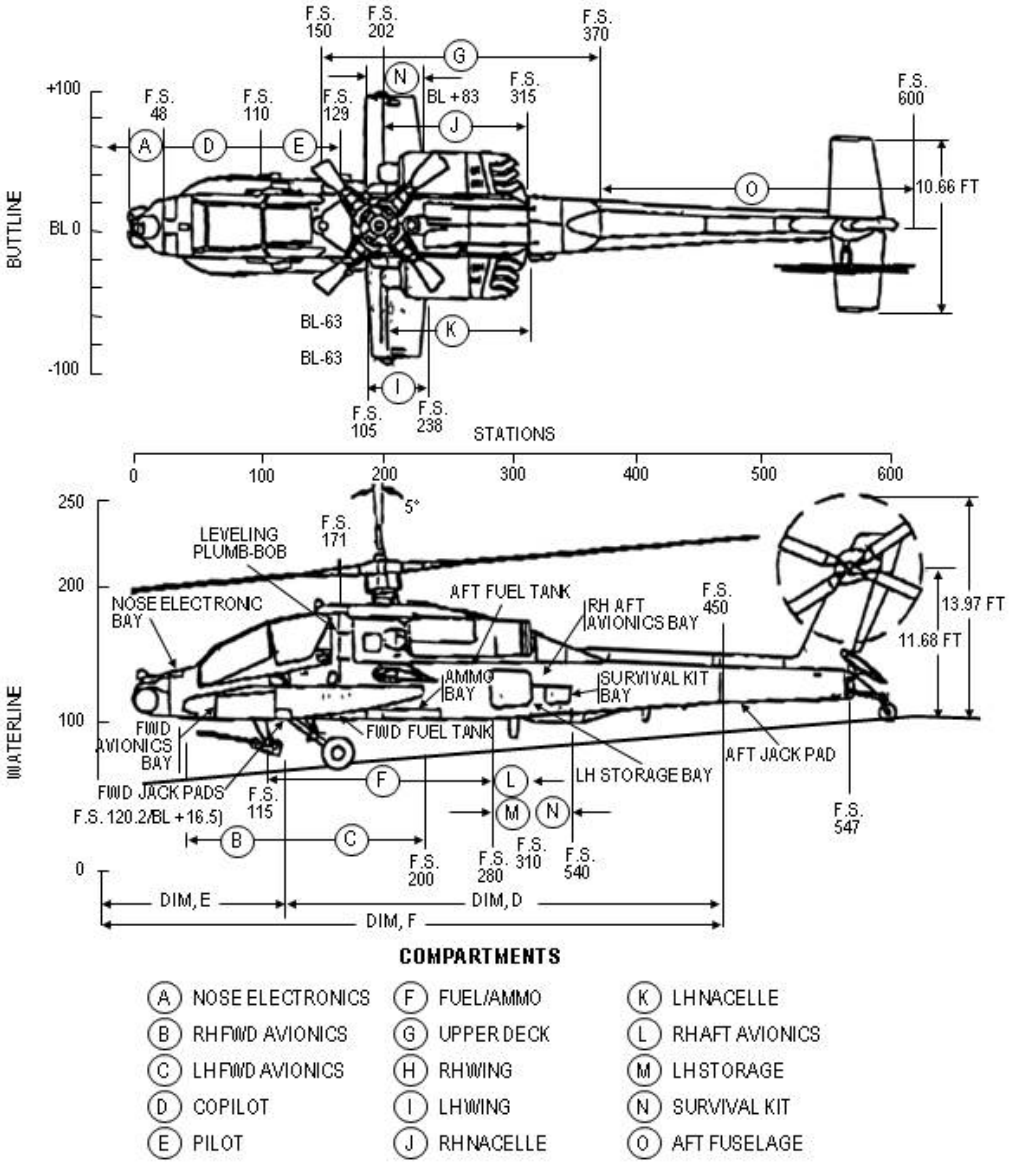

FIGURE E-11. <u>Example of two-view chart diagram.</u>

Source: https://assist.dla.mil -- Downloaded: 2016-12-09T23:24Z
Check the source to verify that this is the current version before use.

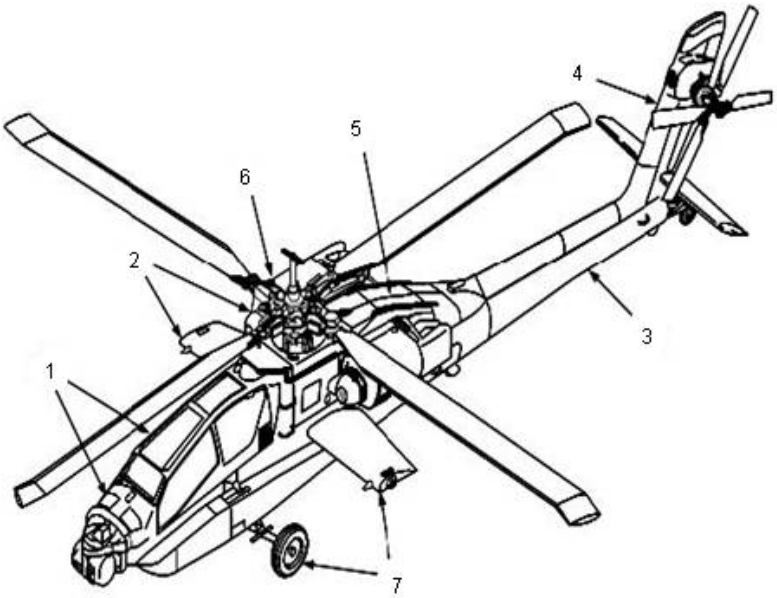

AREA NO. 1	CANOPY, CREW STATION, AVIONICS COMPARTMENTS, FORWARD RELEASE
AREA NO. 2	RIGHT FUSELAGE, WING, PYLONS, RIGHT MAIN LANDING GEAR, NO. 2 ENGINE AND NACELLE, BATTERY COMPARTMENT
AREA NO. 3	AFT FUSELAGE, TAIL ROTOR DRIVE AND CONTROLS
AREA NO. 4	STABILIZER, STABILATOR, TAIL WHEEL, TAIL ROTOR DRIVES AND CONTROLS
AREA NO. 5	AFT EQUIPMENT BAY (ALL EQUIPMENT)
AREA NO. 6	MAIN ROTOR AND CONTROLS
AREA NO. 7	LEFT FUSELAGE, WING, PYLONS, LEFT MAIN LANDING GEAR, NO. 1 ENGINE AND NACELLE, AMMO COMPARTMENT

FIGURE E-12. Example of an area diagram for PMD.

Source: https://assist.dla.mil -- Downloaded: 2016-12-09T23:24Z
Check the source to verify that this is the current version before use.

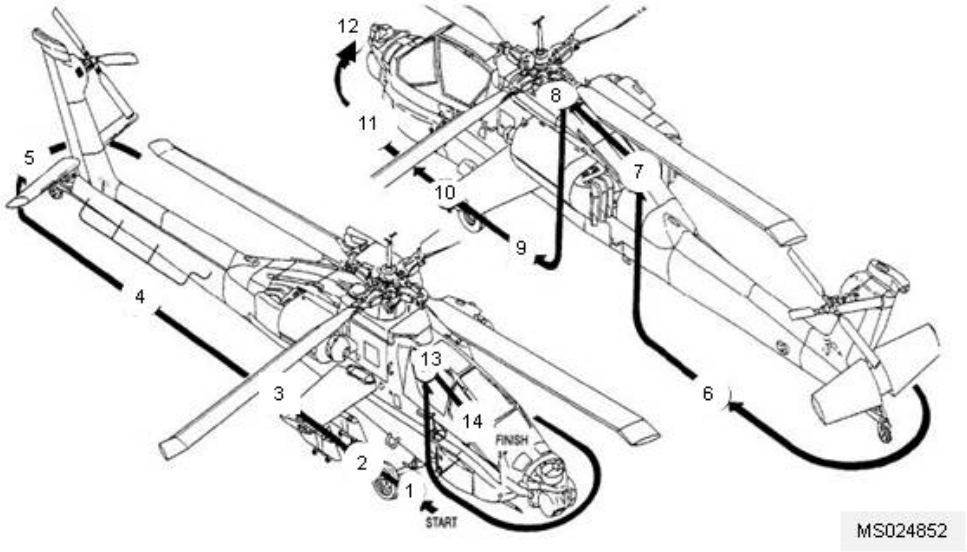

Figure 1. Area Diagram

TM 1-1520-238-PMS

AREA NO. 1	WP 0002	Fuselage—Right Side Forward	All surfaces, components, and equipment in forward avionics bay. Includes landing gear and search light.
AREA NO. 2	WP 0003	Fuselage—Right Side Center	All surfaces, components, and equipment aft of crewstation to engine nacelle. Includes transmission deck, right nose gearbox, engine installation components, wing and stores.
AREA NO. 3	WP 0004	Engine Nacelle—Right	All surfaces, components, and equipment aft of APU exhaust duct. Includes lower nacelle, aft electronics compartment, and IR suppressor.
AREA NO. 4	WP 0005	Fuselage—Right Side Aft	All surfaces, components, and equipment aft of APU exhaust duct and forward of intermediate gearbox. Includes hydraulic ground service panel and aft horizontal tail rotor drive shaft.
AREA NO. 5	WP 0006	Tail Section	All surfaces, components, and equipment aft of tailboom area. Includes horizontal stabilator, tail landing gear, intermediate and tail rotor gearboxes, aft vertical tail rotor drive shaft, and tail rotor
AREA NO. 6	WP 0007	Fuselage—Left Side Aft	All surfaces, components, and equipment forward of intermediate gearbox and aft of ANCU exhaust duct.
AREA NO. 7	WP 0008	Catwalk	All surfaces, components, and equipment in catwalk area. Includes shaft-driven compressor, forward tail rotor drive shaft, fire extinguisher containers, environmental control unit (ENCU), and APU.

FIGURE E-13. <u>Example of an area diagram for PMS.</u>

Source: https://assist.dla.mil -- Downloaded: 2016-12-09T23:24Z
Check the source to verify that this is the current version before use.

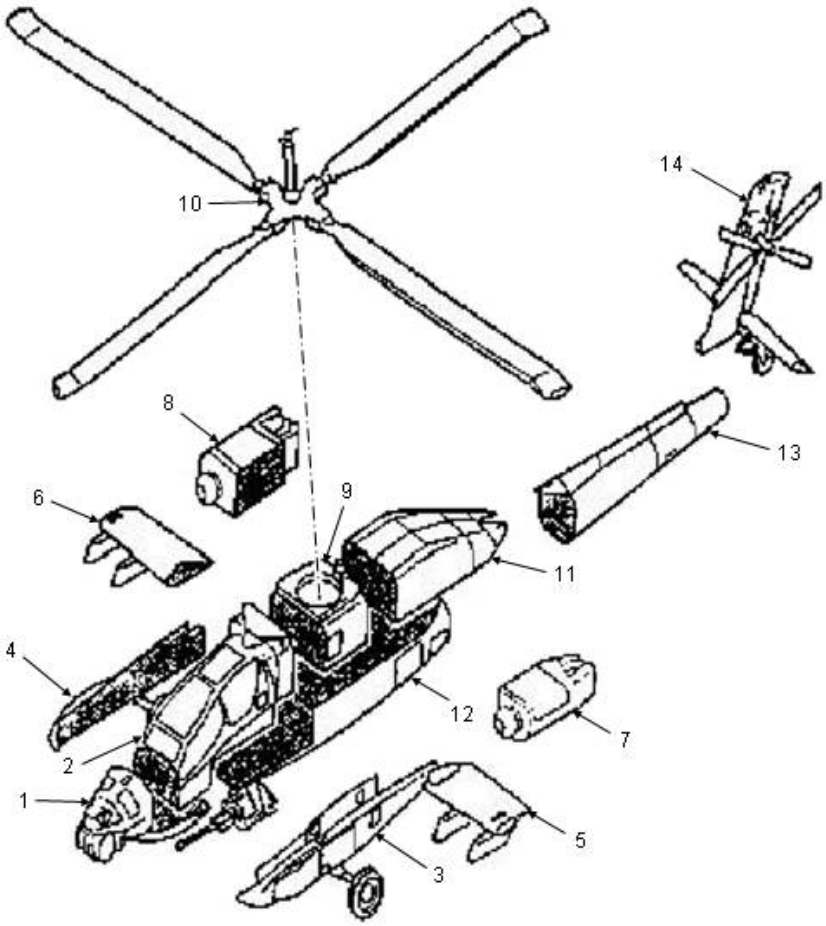

AREA NO.	AREA TITLE
1	FORWARD FUSELAGE
2	CREW STATIONS
3	LEFT FORWARD AVIONICS BAY AND MAIN LANDING GEAR
4	RIGHT FORWARD AVIONICA BAY AND MAIN LANDING GEAR
5	LEFT WING AND PYLONS
6	RIGHT WING AND PYLONS
7	LEFT ENGINE AND NOSE GEARBOX
8	RIGHT ENGINE AND NOSE GEARBOX
9	MAIN TRANSMISSION
10	MAIN ROTOR
11	AFT EQUIPMENT BAY
12	MID AND LOWER FUSELAGE
13	AFT FUSELAGE
14	EMPENNAGE, TAIL ROTOR AND TAIL LANDING GEAR

FIGURE E-14. Example of an inspection area diagram.

Source: https://assist.dla.mil -- Downloaded: 2016-12-09T23:24Z
Check the source to verify that this is the current version before use.

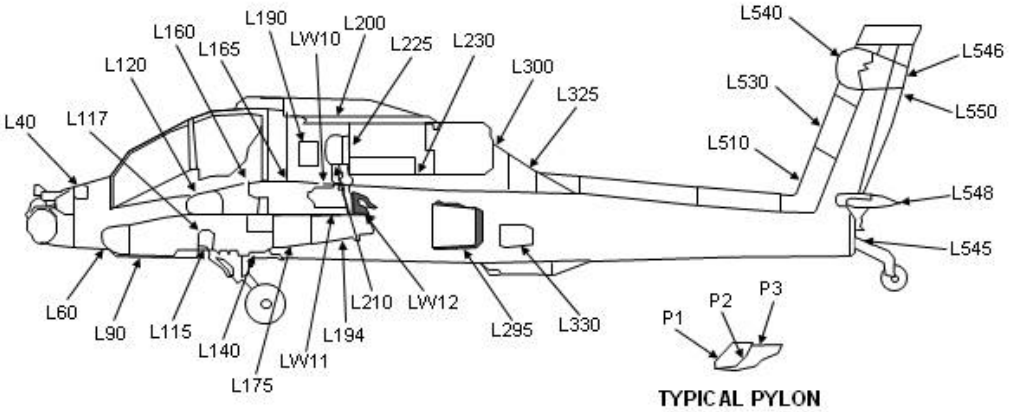

LEFT SIDE

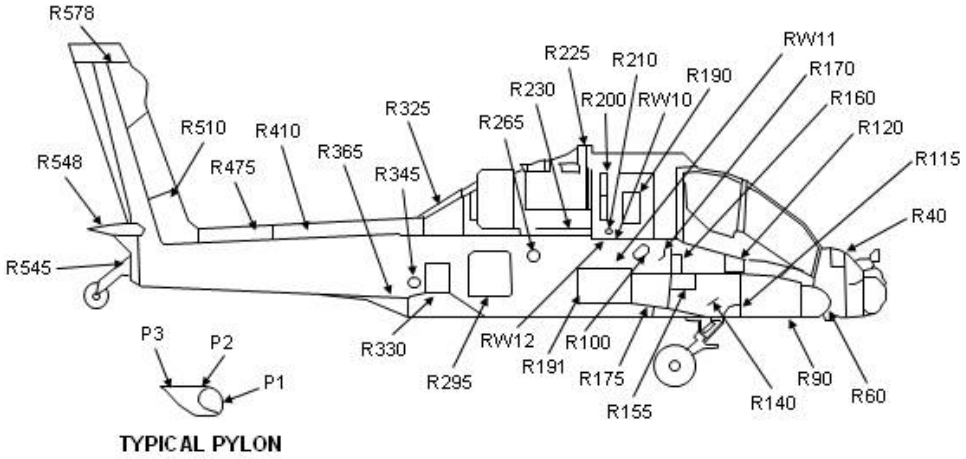

RIGHT SIDE

FIGURE E-15. <u>Example of inspection access provisions.</u>

Source: https://assist.dla.mil -- Downloaded: 2016-12-09T23:24Z
Check the source to verify that this is the current version before use.

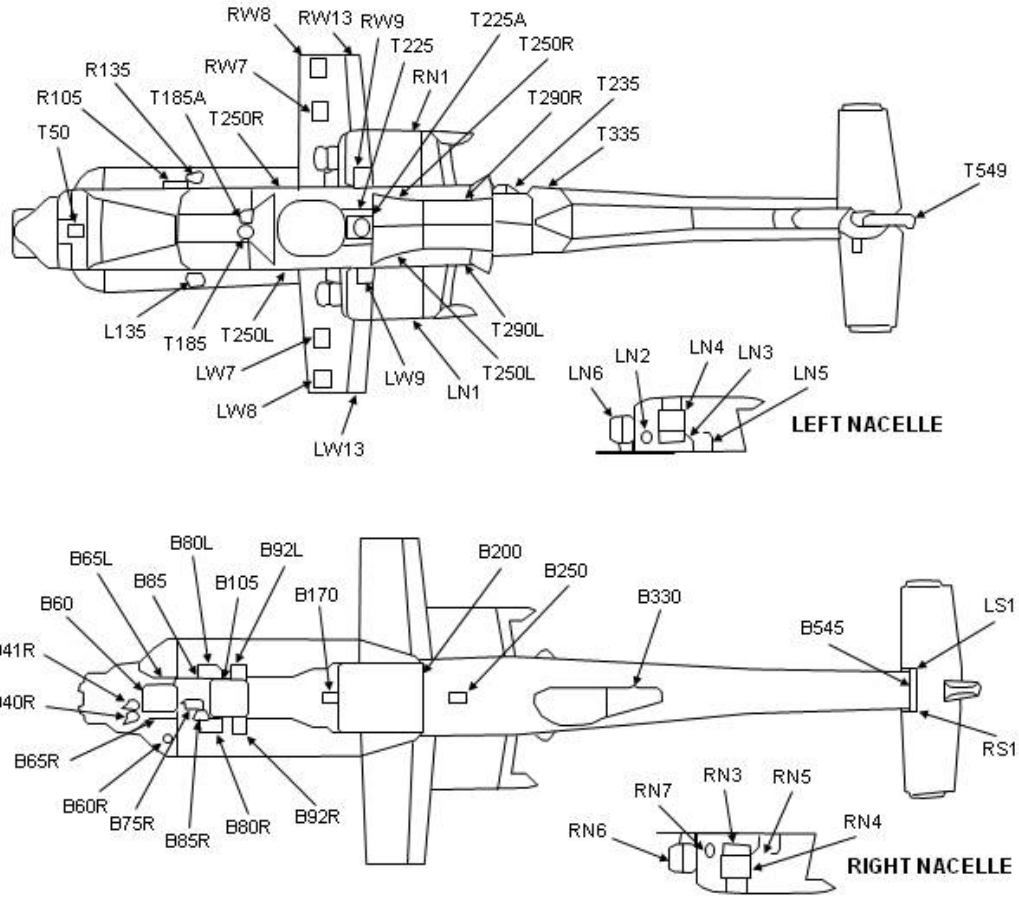

FIGURE E-15. Example of inspection access provisions – Continued.

Source: https://assist.dla.mil -- Downloaded: 2016-12-09T23:24Z
Check the source to verify that this is the current version before use.

This page intentionally left blank.

Source: https://assist.dla.mil -- Downloaded: 2016-12-09T23:24Z
Check the source to verify that this is the current version before use.

APPENDIX F
REPAIR PARTS AND SPECIAL TOOLS LIST (RPSTL)

F.1 **SCOPE.**

F.1.1 Scope. This appendix establishes the technical content requirements for the preparation of parts information for major weapon systems and their related systems, subsystems, equipment, assemblies, components, SRUs, and LRUs. This appendix is a mandatory part of this standard. The information contained herein is intended for compliance. The requirements are applicable for all maintenance levels/classes through overhaul (depot), including DMWRs and NMWRs.

F.2 **APPLICABLE DOCUMENTS.**

The applicable documents in section 2 apply to this appendix.

F.3 **DEFINITIONS.**

The definitions in section 3 apply to this appendix.

F.4 **GENERAL REQUIREMENTS.**

F.4.1 General. The RPSTL provides authorized spares and repair parts; special tools; special Test, Measurement, and Diagnostic Equipment (TMDE); and other special support equipment required for performance of all levels of maintenance of the weapon system/equipment, subsystems, assemblies, and components. The RPSTL authorizes the requisitioning, issue and disposition of spares, repair parts and special tools in accordance with the SMR codes.

F.4.2 Maintenance level/class applicability. Requirements contained in this appendix are applicable to all maintenance levels/classes unless specifically labeled in bold and in parentheses. The labeled requirement may specify a specific level (e.g., **Field**) or a specific maintenance class (refer to 3.89) (e.g., **Maintainer** or **AMC**). The labeled requirement shall be applicable to all TMs containing that maintenance level/class. An explanation of applicable DA maintenance levels/classes is provided in section 3. All RPSTL information for all levels of maintenance, including depot, may be in a single RPSTL manual or may be in multiple RPSTLs. When separate RPSTLs are specified by the acquiring activity, they shall be grouped by maintenance level. Duplication of the RPSTL data should be avoided when separating by maintenance level/class..

F.4.3 Preparation of digital data for electronic delivery. Data prepared and delivered digitally in accordance with this standard shall be XML tagged using the current Army DTD. Data shall be formatted for presentation using the Army style sheets. Refer to 4.6 for information on obtaining or accessing the Army DTD and style sheets. XML tags used in the DTD are noted throughout the text of this standard in bracketed, bold characters (e.g., **`<descwp>`**) as a convenience for the author and to ensure that the tags are used correctly when developing a document instance.

Source: https://assist.dla.mil -- Downloaded: 2016-12-09T23:24Z
Check the source to verify that this is the current version before use.

F.4.4 Use of the Document Type Definition (DTD)/style sheet. The DTD referenced in this appendix interprets the technical content and structure for the functional requirements contained in this standard. Development of the page-based TMs shall be accomplished through the use of this standard, the Army DTD, and the Army style sheets. MIL-HDBK-1222 provides further guidance and preferred style and format. The guidance in MIL-HDBK-1222 shall be followed unless it conflicts with the requirements in this standard.

F.4.5 Content structure. The examples provided herein are an accurate representation of the content structure requirements contained in this appendix and shall be followed to permit the effective use of the DTD for RPSTL.

F.4.6 Style and format. This standard provides style and format requirements for the technical content requirements described in this appendix. These requirements are considered mandatory and are intended for compliance.

F.4.7 Work package development. Data developed in accordance with this appendix shall be divided into work packages. These work packages should be stand alone and are broken into the following work package types: Introduction, parts list, repair parts for special tools, kits, bulk items, special tools list, and cross reference indexes. A work package shall contain all information and references required to support the work package type.

F.4.8 Selective application and tailoring of content using Appendix A matrixes. This standard contains some requirements that may not be applicable to the preparation of all TMs. Selective application and tailoring of requirements contained in this standard are the responsibility of the acquiring activity and shall be accomplished using APPENDIX A. The applicability of some requirements is also designated by one of the following statements: unless specified otherwise by the acquiring activity; as specified by the acquiring activity; or when specified by the acquiring activity.

F.5 **DETAILED REQUIREMENTS.**

F.5.1 General. The requirements provided in this appendix provide the technical content requirements for the preparation of RPSTL data.

F.5.2 RPSTL development. RPSTL requirements include:

a. Introductory information;
b. Listings of all authorized spare and repair parts, special tools, special TMDE, and other support equipment required for performance of maintenance; and
c. Illustrations to identify and locate the spare and repair parts.

F.5.3 Preparation of RPSTL. RPSTL data shall be prepared for weapon systems, major components, and applicable support and interface equipment. This information shall be contained in one of the following:

a. A separate RPSTL TM.
b. RPSTL work packages included in a maintenance TM.
c. RPSTL work packages included in a DMWR.
d. RPSTL work packages included in a NMWR.

F.5.3.1 Separate RPSTL TM. Separate RPSTL TMs shall consist of front and rear matter and a Parts Information Chapter **<pim>** containing the work packages as described in F.5.3.2.

Source: https://assist.dla.mil -- Downloaded: 2016-12-09T23:24Z
Check the source to verify that this is the current version before use.

F.5.3.2 RPSTL chapter **<pim>**. Unless otherwise specified, the RPSTL chapter **<pim>** shall contain the following work packages listed in the order specified:

a. A single introduction work package **<introwp>.** (Refer to F.5.3.5.)
b. One or more repair parts list work packages **<plwp**> . (Refer to F.5.3.6.)
c. When the requirements in F.5.3.7 a through c are met, a repair parts for special tools work package **<stl_partswp>** shall be prepared. (Refer to F.5.3.7.)
d. When kit parts are listed as described under option 2 (refer to F.5.3.6.3.2.6.9b, a kit parts list work package **<kitswp>** shall be prepared. (Refer to F.5.3.8.)
e. When bulk items are listed in a parts list, a bulk items work package **<bulkitemswp>** shall be prepared. (Refer to F.5.3.9.)
f. When special tools are listed, one or more special tools list work packages **<stlwp>** shall be prepared. (Refer to F.5.3.10.)
g. A National Stock Number (NSN) index work package **<nsnindxwp>** shall be prepared. (Refer to F.5.3.11.1)
h. A part number index work package **<pnindxwp>** shall be prepared. (Refer to F.5.3.11.2.)
i. When specified by the acquiring activity, a reference designator index work package **<refdesindxwp>** shall be prepared. (Refer to F.5.3.11.3.)

F.5.3.3 RPSTL work packages requirements. When a separate RPSTL manual is not procured and repair parts and/or special tools are required, the work packages described previously shall be prepared as specified in F.5.3.3.1 or F.5.3.3.2.

F.5.3.3.1 RPSTL work packages **<pim>** included in a maintenance TM. When a separate RPSTL manual is not required or authorized, RPSTL data shall be included in a separate parts information chapter **<pim>** that immediately follows the last Maintenance Information Chapter (**<mim>**) in a maintenance TM. Front and rear matter requirements shall become part of the maintenance TM that includes the RPSTL work packages.

F.5.3.3.2 RPSTL work packages included in a DMWR/NMWR. If an item of equipment is programmed for depot overhaul and no repair parts (including modules, printed circuits, and components) are authorized for replacement below depot level maintenance, authorized repair parts data shall be included in the applicable DMWR/NMWR. The work packages described in F.5.3.5 through F.5.3.11 shall be included as specified herein.

F.5.3.3.2.1 Depot repair parts. Unless otherwise specified by the acquiring activity, depot level repair parts shall be included in the single RPSTL. (Refer to F.5.3.) When the acquiring activity specifies a depot (DMWR/NMWR) level RPSTL, only depot level parts shall appear in the depot RPSTL. Figure(s) in the lower maintenance level RPSTL that contain both depot coded and non-depot coded parts shall identify all parts. The appropriate SMR code shall identify the repair level. If the RPSTL TM includes depot repair parts, the statement "Including Depot Maintenance Repair Parts" shall be added to the title of the RPSTL TM.

Source: https://assist.dla.mil -- Downloaded: 2016-12-09T23:24Z
Check the source to verify that this is the current version before use.

F.5.3.4 Repair parts list, special tools, and kits work package layout. All RPSTL work packages shall start on a right-hand page in accordance with 4.7.2.3. For parts list, special tools, and kit work packages, the first page shall contain the work package identification information **<wpidinfo>**. The Figure shall start on page 2. The parts list shall follow the figure and shall start on a new page. (Refer to FIGURE F-1 for possible layout scenarios. Refer to F.5.3.12.1 for the figure layout requirements.)

F.5.3.5 Introduction work package **<introwp>**. The introduction work package shall be prepared to the requirements contained in F.5.3.5.1 through F.5.3.5.3.3. (Refer to FIGURE F-2.)

F.5.3.5.1 Work package identification information **<wpidinfo>**. Work package identification information is required for this work package. (Refer to 4.7.9.3.)

F.5.3.5.2 Work package initial setup **<initial_setup>**. Initial setup is not required for this work package.

F.5.3.5.3 Introduction. One of the following introductions shall be included. The content of F.5.3.5.3.1 covers non-aviation, F.5.3.5.3.2 covers aviation, and F.5.3.5.3.3 covers Marine Corps only. The verbatim text (within the quotation marks) shall be included. The italicized text shall be replaced with the required system specific information or select the corresponding phrase for the specific system. The publication list shall identify the publication number and title in numerical sequence. If the publication is non-government, the source shall be given and shall be listed alphabetically by title. If there are any SMR codes in the RPSTL data that use the 6th position, information for the 6th position found in AR 700-82 shall be included in the RPSTL introduction after the explanation of the 5th position.

F.5.3.5.3.1 Non aviation Repair Parts and Special Tool List (RPSTL) introduction.

"**INTRODUCTION**

SCOPE

This RPSTL lists the authorized spares and repair parts; special tools; special test, measurement, and diagnostic equipment (TMDE); and other special support equipment required for performance of (*enter maintenance level*) maintenance of the (*enter item name*). It authorizes the requisitioning, issue, and disposition of spares, repair parts, and special tools as indicated by the source, maintenance, and recoverability (SMR) codes.

GENERAL

In addition to the Introduction work package, this RPSTL is divided into the following work packages.

1. Repair Parts List Work Packages. Work packages containing lists of spare and repair parts authorized for use in the performance of maintenance at the levels determined by the MAC/SMR code. These work packages also include parts which must be removed for replacement of the authorized parts. Parts lists are composed of functional groups in ascending alphanumeric sequence, with the parts in each group listed in ascending Figure and item number sequence. Sending units, brackets, filters, and bolts are listed with the component they mount on. Bulk materials are listed by item name in the Bulk Items work package which follows (*select the work package the bulk items follow: the last Parts List work package, the Special Tools Repair Parts work package, or Kits*) work package. *(choose one of the following) Repair parts kits are listed separately in their own functional group and work package* **OR** *Repair parts kits*

Source: https://assist.dla.mil -- Downloaded: 2016-12-09T23:24Z
Check the source to verify that this is the current version before use.

are listed at the end of the individual work packages. Repair parts for reparable special tools are also listed in a separate work package. Items listed are shown on the associated illustrations.

2. *(Include the text in items* 2 *through 4 only if the described work package is included in the TM.)* Special Tools Repair Parts Work Package. This work package lists any spare parts required for the special tools, TMDE, or other support equipment listed in the Special Tools Work Package that are not listed in any other publication.

3. Kits work package. This work package lists all repair kits and their component parts.

4. Bulk Items Work Package. This work package lists all items identified as ‘bulk’ in the parts lists. Due to the nature of bulk items, this work package does not include a Figure.

5. Special Tools List Work Packages. This work package lists those special tools, special TMDE, and special support equipment authorized by this RPSTL (as indicated by Basis of Issue (BOI) information in the DESCRIPTION AND USABLE ON CODE (UOC) column). Tools that are components of common tool sets and/or Class VII are not listed.

6. Cross-Reference Indexes Work Packages. There are (*enter applicable number*) cross-reference indexes work packages in this RPSTL. The National Stock Number (NSN) Index work package refers you to the Figure and item number for each NSN listed in the RPSTL. The Part Number Index work package refers you to the figure and item number for each part number listed in the RPSTL. (*If reference designator is used enter: "The Reference Designator Index work package refers you to the Figure and item number of each reference designator listed in the RPSTL").*

EXPLANATION OF COLUMNS IN THE REPAIR PARTS LIST AND SPECIAL TOOLS LIST WORK PACKAGES

ITEM NO. (Column 1). Indicates the number used to identify items called out in the illustration.

SMR CODE (Column 2). The SMR code containing supply/requisitioning information, maintenance level authorization criteria, and disposition instruction in accordance with AR 700-82, as shown in the following breakout. This entry may be subdivided into 4 subentries, one for each service.

TABLE 1. SMR Code Explanation.

Source Code	**Maintenance Code**		**Recoverability Code**
XX	XX		X
1st two positions: How to get an item.	3rd position: Who can install, replace, or use the item.	4th position: Who can do complete repair on the item	5th position: Who determines disposition action on unserviceable items.

Source: https://assist.dla.mil -- Downloaded: 2016-12-09T23:24Z
Check the source to verify that this is the current version before use.

NOTE

Complete Repair: Maintenance capacity, capability, and authority to perform all corrective maintenance tasks of the "Repair" function in a use/user environment in order to restore serviceability to a failed item.

Source Code. The source code tells you how you get an item needed for maintenance, repair, or overhaul of an end item/equipment. Explanations of source codes follow:

TABLE 2. Source Code Explanation.

Source Code	Application/Explanation
PA PB PC PD PE PF PG PH PR PZ	Stock items; use the applicable NSN to requisition/request items with these source codes. They are authorized to the level indicated by the code entered in the third position of the SMR code. **NOTE** Items coded PC are subject to deterioration. Items coded PR or PZ are obsolete and may not be able to be ordered like other P coded items.
KD KF KB	Items with these codes are not to be requested/requisitioned individually. They are part of a kit that is authorized to the maintenance level indicated in the third position of the SMR code. The complete kit must be requisitioned and applied.
MF-Made at maintainer class MH-Made at below depot sustainment class ML-Made at SRA MD-Made at depot MG-Navy only	Items with these codes are not to be requisitioned/requested individually. They must be made from bulk material which is identified by the P/N in the DESCRIPTION AND USABLE ON CODE (UOC) entry and listed in the bulk material group work package of the RPSTL. If the item is authorized to you by the third position code of the SMR code, but the source code indicates it is made at higher level, order the item from the higher level of maintenance.
AF-Assembled by maintainer class AH-Assembled by below depot sustainment class AL-Assembled by SRA	Items with these codes are not to be requested/requisitioned individually. The parts that make up the assembled item must be requisitioned or fabricated and assembled at the level of maintenance indicated by the source code. If the third position of the SMR code authorizes you to replace the item, but the source code indicates the item is assembled at a

Source: https://assist.dla.mil -- Downloaded: 2016-12-09T23:24Z
Check the source to verify that this is the current version before use.

Source Code	Application/Explanation
AD-Assembled by depot	higher level, order the item from the higher level of maintenance.
AG - Navy only	
XA	Do not requisition an "XA" coded item. Order the next higher assembly. (Refer to NOTE below.)
XB	If an item is not available from salvage, order it using the CAGEC and P/N.
XC	Installation drawings, diagrams, instruction sheets, field service drawings; identified by manufacturer's P/N.
XD	Item is not stocked. Order an XD-coded item through local purchase or normal supply channels using the CAGEC and P/N given, if no NSN is available.

NOTE

Cannibalization or controlled exchange, when authorized, may be used as a source of supply for items with the above source codes except for those items source coded "XA" or those aircraft support items restricted by requirements of AR 750-1.

Maintenance Code. Maintenance codes tell you the level(s) of maintenance authorized to use and repair support items. The maintenance codes are entered in the third and fourth positions of the SMR code as follows:

Third Position. The maintenance code entered in the third position tells you the lowest maintenance class authorized to remove, replace, and use an item. The maintenance code entered in the third position will indicate authorization to the following classes of maintenance:

Maintenance Code	Application/Explanation
C -	Crew
F -	Maintainer maintenance can remove, replace, and use the item.
H -	Below Depot Sustainment maintenance can remove, replace, and use the item.
L -	Specialized repair activity can remove, replace, and use the item.
G -	Afloat and ashore intermediate maintenance can remove, replace, and use the item (Navy only)
K -	Contractor facility can remove, replace, and use the item

Source: https://assist.dla.mil -- Downloaded: 2016-12-09T23:24Z
Check the source to verify that this is the current version before use.

Maintenance Code	Application/Explanation
Z -	Item is not authorized to be removed, replace, or used at any maintenance level
D -	Depot can remove, replace, and use the item.

NOTE

Army will use C in the third position. However, for joint service publications, other services may use O.

Fourth Position. The maintenance code entered in the fourth position tells you whether or not the item is to be repaired and identifies the lowest maintenance class with the capability to do complete repair (perform all authorized repair functions).

Maintenance Code	Application/Explanation
C -	Crew (operator) is the lowest class that can do complete repair.
F -	Maintainer is the lowest class that can do complete repair of the item.
H -	Below Depot Sustainment is the lowest class that can do complete repair of the item.
L -	Specialized repair activity (*enter specialized repair activity designator*) is the lowest class that can do complete repair of the item.
D -	Depot is the lowest class that can do complete repair of the item.
G -	Both afloat and ashore intermediate levels are capable of complete repair of item. (Navy only)
K -	Complete repair is done at contractor facility
Z -	Nonreparable. No repair is authorized.
B -	No repair is authorized. No parts or special tools are authorized for maintenance of "B" coded item. However, the item may be reconditioned by adjusting, lubricating, etc., at the user level.

Recoverability Code. Recoverability codes are assigned to items to indicate the disposition action on unserviceable items. The recoverability code is shown in the fifth position of the SMR code as follows:

Source: https://assist.dla.mil -- Downloaded: 2016-12-09T23:24Z
Check the source to verify that this is the current version before use.

Recoverability Code	**Application/Explanation**
C -	Reparable item. When uneconomically reparable, condemn and dispose of the item at the crew/operator level.
Z -	Nonreparable item. When unserviceable, condemn and dispose of the item at the level of maintenance shown in the third position of the SMR code.
F -	Reparable item. When uneconomically reparable, condemn and dispose of the item at the field level.
H -	Reparable item. When uneconomically reparable, condemn and dispose of the item at the below depot sustainment.
D -	Reparable item. When beyond lower level repair capability, return to depot. Condemnation and disposal of item are not authorized below depot.
L -	Reparable item. Condemnation and disposal not authorized below Specialized Repair Activity (SRA).
A -	Item requires special handling or condemnation procedures because of specific reasons (such as precious metal content, high dollar value, critical material, or hazardous material). Refer to appropriate manuals/directives for specific instructions.
G -	Field level reparable item. Condemn and dispose at either afloat or ashore intermediate levels. (Navy only)
K -	Reparable item. Condemnation and disposal to be performed at contractor facility.

NSN (Column (3)). The NSN(s) for the item is listed in this column.

CAGEC (Column (4)). The Commercial and Government Entity Code (CAGEC) is a five-digit code which is used to identify the manufacturer, distributor, or Government agency/activity that supplies the item.

PART NUMBER (Column (5)). Indicates the primary number used by the manufacturer (individual, company, firm, corporation, or Government activity), which controls the design and characteristics of the item by means of its engineering drawings, specifications, standards, and inspection requirements to identify an item or range of items.

Source: https://assist.dla.mil -- Downloaded: 2016-12-09T23:24Z
Check the source to verify that this is the current version before use.

NOTE

When you use an NSN to requisition an item, the item you receive may have a different part number from the number listed.

DESCRIPTION AND USABLE ON CODE (UOC) (Column (6)). This column includes the following information:

1. The federal item name, and when required, a minimum description to identify the item.

2. Part numbers of any bulk materials required if the item is to be locally manufactured or fabricated.

3. Hardness Critical Item (HCI). Items that require special handling or procedures to ensure protection against electromagnetic pulse (EMP) damage are marked with the letters 'HCI.'

4. Refer to Usable on Code details presented later in this work package under SPECIAL INFORMATION.

5. Dot indentions indicate the relationship of the part (or parts) to its next higher assembly (NHA) in the tabular listing. The NHA for this part (or parts) is listed right before the part (or parts) that it is the NHA for. If the item is connected directly to (can be disassembled from) the item identified in the functional group code title for that specific tabular listing, it shall have one dot indentation. Otherwise, that item in the tabular list will not have a dot indention.

6. The statement END OF FIGURE appears below the last item description in column (6) for each Figure in the repair parts list, special tools repair parts, kits, bulk items, and special tools list work packages

QTY (Column (7)). The QTY (quantity per Figure) column indicates the quantity of the item used in the breakout shown on the illustration/Figure. A "V" appearing in this column instead of a quantity indicates that the quantity is variable and quantity may change from application to application.

(MC) Include in multiservice manuals involving Marine Corps.

USMC QTY per Equip (Column (8)). This column indicates the total quantity of the item used on the equipment.

EXPLANATION OF CROSS-REFERENCE INDEXES WORK PACKAGES FORMAT AND COLUMNS

1. National Stock Number (NSN) Index Work Package. NSNs in this index are listed in National Item Identification Number (NIIN) sequence.

STOCK NUMBER Column. This column lists the NSN in NIIN sequence. The NIIN consists of the last nine digits of the NSN. When using this column to locate an item, ignore the first four digits of the NSN. However, the complete NSN should be used when ordering items by stock number.

For example, if the NSN is 5385-01-574-1476, the NIIN is 01-574-1476.

FIG. Column. This column lists the number of the Figure where the item is identified/located. The Figures are in numerical order in the repair parts list and special tools list work packages.

Source: https://assist.dla.mil -- Downloaded: 2016-12-09T23:24Z
Check the source to verify that this is the current version before use.

ITEM Column. This column identifies the item associated with the Figure listed in the adjacent FIG. column. This item is also identified by the NSN listed on the same line.

2. Part Number (P/N) Index Work Package. Part numbers which are all numbers are listed first in ascending numeric sequence. Part numbers containing letters and numbers are listed in ascending alphanumeric sequence by part number after all the part numbers containing numbers only.

PART NUMBER Column. This column indicates the part number assigned to the item.

FIG. Column. This column lists the number of the Figure where the item is identified/located in the repair parts list and special tools list work packages.

ITEM Column. The item number is the number assigned to the item as it appears in the Figure referenced in the adjacent Figure number column.

Include item 3 if reference designator index is used.

3. Reference Designator Index Work Package. Reference designators in this index are listed in ascending alphanumeric sequence (vertical arrangement of letter and number combination which places the first letter or digit of each group in order "A" through "Z," followed by the numbers "0" through "9" and each following letter or digit in like order).

REFERENCE DESIGNATOR Column. This column indicates the reference designator assigned to the item.

FIG. Column. This column lists the number of the Figure where the item is identified/located in the repair parts list or special tools list work package.

ITEM Column. The item number is the number assigned to the item as it appears in the Figure referenced in the adjacent Figure number column.

SPECIAL INFORMATION

UOC. The UOC appears in the lower left corner of the Description Column heading. Usable on codes are shown as "UOC:" in the Description Column (justified left) on the first line under the applicable item/nomenclature. Uncoded items are applicable to all models. Examples of the UOCs used in the RPSTL are:

Code	Used On
PAA	Model M114
PAB	Model M114A
PAC	Model M114B

Include appropriate UOC content, as applicable.

Fabrication Instructions. Bulk materials required to manufacture items are listed in the bulk material work package of this RPSTL. Part numbers for bulk material are also referenced in the Description Column of the line item entry for the item to be manufactured/fabricated. Detailed fabrication instructions for items source coded to be manufactured or fabricated are found in (*enter applicable TM number or work package sequence number*).

Source: https://assist.dla.mil -- Downloaded: 2016-12-09T23:24Z
Check the source to verify that this is the current version before use.

Index Numbers. Items which have the word BULK in the Figure column will have an index number shown in the item number column. This index number is a cross-reference between the NSN/Part Number (P/N) Index work packages and the bulk material list in the bulk items work package.

For a combined narrative-RPSTL manual associated publications shall not be included.

Associated Publications. The publication(s) listed below pertain to the (*enter item name*):

Publication	**Short Title**

The following paragraph shall appear only in the field maintenance RPSTL special instructions.

Illustrations List. The illustrations in this RPSTL contain field authorized items. Illustrations published in (*enter applicable TM number for the higher maintenance level RPSTL, e.g., for field, below depot sustainment, etc.*) that contain field authorized items also appear in this RPSTL. The tabular list in the repair parts list work package contains only those parts coded "F" in the third position of the SMR code; therefore, there may be a break in the item number sequence.

HOW TO LOCATE REPAIR PARTS

1. When NSNs or Part Numbers Are Not Known.

First. Using the table of contents, determine the assembly group to which the item belongs. This is necessary since Figures are prepared for assembly groups and subassembly groups, and lists are divided into the same groups.

Second. Find the Figure covering the functional group or the sub functional group to which the item belongs.

Third. Identify the item on the Figure and note the number(s).

Fourth. Look in the repair parts list work packages for the Figure and item numbers. The NSNs and part numbers are on the same line as the associated item numbers.

2. When NSN Is Known.

First. If you have the NSN, look in the STOCK NUMBER column of the NSN index work package. The NSN is arranged in NIIN sequence. Note the Figure and item number next to the NSN.

Second. Turn to the Figure and locate the item number. Verify that the item is the one for which you are looking.

3. When Part Number Is Known.

First. If you have the part number and not the NSN, look in the PART NUMBER column of the part number index work package. Identify the Figure and item number.

Second. Look up the item on the Figure in the applicable repair parts list work package.

Include item 4 only if the RPSTL has a reference designator index work package.

4. When Reference Designator Is Known.

First. If you know the reference designator, look in the REFERENCE DESIGNATOR column of the reference designator index work package. Note the Figure and item number.

Source: https://assist.dla.mil -- Downloaded: 2016-12-09T23:24Z
Check the source to verify that this is the current version before use.

Second. Turn to the Figure and locate the item number. Verify that the item is the one for which you are looking.

ABBREVIATIONS

Abbreviation	**Explanation**

Include all abbreviations used in the RPSTL. "

F.5.3.5.3.2 Aviation Repair Parts and Special Tool List (RPSTL) introduction.

"**INTRODUCTION**

SCOPE

This RPSTL lists and authorizes spares and repair parts; special tools; special test, measurement, and diagnostic equipment (TMDE); and other special support equipment required for performance of (*enter maintenance level*) maintenance of the (*enter item name*). It authorizes the requisitioning, issue, and disposition of spares, repair parts, and special tools as indicated by the source, maintenance, and recoverability (SMR) codes.

GENERAL

In addition to the Introduction work package, this RPSTL is divided into the following work packages.

1. Repair Parts List Work Packages. Work packages containing lists of spare and repair parts authorized for use in the performance of maintenance at the levels determined by the MAC/SMR code. These work packages also include parts which must be removed for replacement of the authorized parts. Parts lists are composed of functional groups in ascending alphanumeric sequence, with the parts in each group listed in ascending Figure and item number sequence. Sending units, brackets, filters, and bolts are listed with the component they mount on. Bulk materials are listed by item name in the Bulk Items work package which follows (*select the work package the bulk items follow: the last Parts List work package, the Special Tools Repair Parts work package, or Kits*) work package. *(choose one of the following) Repair parts kits are listed separately in their own functional group and work package* **OR** *Repair parts kits are listed at the end of the individual work packages.* Repair parts for reparable special tools are also listed in a separate work package. Items listed are shown on the associated illustrations.

2. *(Include the text in items 2 through 4 only if the described work package is included in the TM.)* Special Tools Repair Parts Work Package. This work package lists any spare parts required for the special tools, TMDE, or other support equipment listed in the Special Tools Work Package that are not listed in any other publication.

3. Kits work package. This work package lists all repair kits and their component parts.

4. Bulk Items Work Package. This work package lists all items identified as ‘bulk’ in the parts lists. Due to the nature of bulk items, this work package does not include a Figure.

5. Special Tools List Work Packages. This work package lists those special tools, special TMDE, and special support equipment authorized by this RPSTL (as indicated by Basis of Issue (BOI) information in the DESCRIPTION AND USABLE ON CODE (UOC) column). Tools that are components of common tool sets and/or Class VII are not listed.

Source: https://assist.dla.mil -- Downloaded: 2016-12-09T23:24Z
Check the source to verify that this is the current version before use.

6. Cross-Reference Indexes Work Packages. There are (*enter applicable number*) cross-reference indexes work packages in this RPSTL. The National Stock Number (NSN) Index work package refers you to the Figure and item number for each NSN listed in the RPSTL. The Part Number Index work package refers you to the Figure and item number for each part number listed in the RPSTL." (*If reference designator is used enter: "The Reference Designator Index work package refers you to the Figure and item number of each reference designator listed in the RPSTL).*

EXPLANATION OF COLUMNS IN THE REPAIR PARTS LIST AND SPECIAL TOOLS LIST WORK PACKAGES

ITEM NO. (Column 1). Indicates the number used to identify items called out in the illustration.

SMR CODE (Column 2). The SMR code containing supply/requisitioning information, maintenance level authorization criteria, and disposition instruction in accordance with AR 700-82, as shown in the following breakout. This entry may be subdivided into 4 subentries, one for each service.

TABLE 1. SMR Code Explanation.

Source Code	**Maintenance Code**		**Recoverability Code**
XX	XX		X
1st two positions: How to get an item.	3rd position: Who can install, replace, or use the item.	4th position: Who can do complete repair on the item	5th position: Who determines disposition action on unserviceable items.

NOTE

Complete Repair: Maintenance capacity, capability, and authority to perform all corrective maintenance tasks of the "Repair" function in a use/user environment in order to restore serviceability to a failed item.

Source Code. The source code tells you how you get an item needed for maintenance, repair, or overhaul of an end item/equipment. Explanations of source codes follow:

TABLE 2. Source Code Explanation.

Source Code	**Application/Explanation**
PA PB PC PD PE PF PG PH PR PZ	Stock items; use the applicable NSN to requisition/request items with these source codes. They are authorized to the level indicated by the code entered in the third position of the SMR code. **NOTE** Items coded PC are subject to deterioration. Items coded PR or PZ are obsolete and may not be able to be ordered like other P coded items.

Source: https://assist.dla.mil -- Downloaded: 2016-12-09T23:24Z
Check the source to verify that this is the current version before use.

KD KF KB	Items with these codes are not to be requested/requisitioned individually. They are part of a kit that is authorized to the maintenance level indicated in the third position of the SMR code. The complete kit must be requisitioned and applied.
MO-Made at AMC level MF-Made at ASB level ML-Made at TASMG MD-Made at depot MG- Navy only	Items with these codes are not to be requisitioned/requested individually. They must be made from bulk material which is identified by the P/N in the DESCRIPTION AND USABLE ON CODE (UOC) entry and listed in the bulk material group work package of the RPSTL. If the item is authorized to you by the third position code of the SMR code, but the source code indicates it is made at higher level, order the item from the higher level of maintenance.
AO-Assembled at AMC level AF-Assembled at ASB level AL-Assembled at TASMG AD-Assembled at depot AG-Navy only	Items with these codes are not to be requested/requisitioned individually. The parts that make up the assembled item must be requisitioned or fabricated and assembled at the level of maintenance indicated by the source code. If the third position of the SMR code authorizes you to replace the item, but the source code indicates the item is assembled at a higher level, order the item from the higher level of maintenance.
XA	Do not requisition an "XA" coded item. Order the next higher assembly. (Refer to NOTE below.)
XB	If an item is not available from salvage, order it using the CAGEC and P/N.
XC	Installation drawings, diagrams, instruction sheets, field service drawings; identified by manufacturer's P/N.
XD	Item is not stocked. Order an XD-coded item through local purchase or normal supply channels using the CAGEC and P/N given, if no NSN is available.

NOTE

Cannibalization or controlled exchange, when authorized, may be used as a source of supply for items with the above source codes except for those items source coded "XA" or those aircraft support items restricted by requirements of AR 750-1.

Maintenance Code. Maintenance codes tell you the level(s) of maintenance authorized to use and repair support items. The maintenance codes are entered in the third and fourth positions of the SMR code as follows:

Source: https://assist.dla.mil -- Downloaded: 2016-12-09T23:24Z
Check the source to verify that this is the current version before use.

Third Position. The maintenance code entered in the third position tells you the lowest maintenance level authorized to remove, replace, and use an item. The maintenance code entered in the third position will indicate authorization to the following levels of maintenance:

Maintenance Code	Application/Explanation
O -	AMC maintenance can remove, replace, and use the item
F -	ASB maintenance can remove, replace, and use the item.
L -	TASMG can remove, replace, and use the item.
G -	Afloat and ashore intermediate maintenance can remove, replace, and use the item (Navy only)
K -	Contractor facility can remove, replace, and use the item
Z -	Item is not authorized to be removed, replace, or used at any maintenance level
D -	Depot can remove, replace, and use the item.

Fourth Position. The maintenance code entered in the fourth position tells you whether or not the item is to be repaired and identifies the lowest maintenance level with the capability to do complete repair (perform all authorized repair functions).

Maintenance Code	Application/Explanation
O -	AMC is the lowest class that can do complete repair of item
F -	ASB is the lowest class that can do complete repair of the item.
L -	TASMG is the lowest class that can do complete repair of the item.
D -	Depot is the lowest class that can do complete repair of the item.
G -	Both afloat and ashore intermediate levels are capable of complete repair of item. (Navy only)
K -	Complete repair is done at contractor facility
Z -	Nonreparable. No repair is authorized.
B -	No repair is authorized. No parts or special tools are authorized for maintenance of "B" coded item. However, the item may be reconditioned by adjusting, lubricating, etc., at the user level.

Recoverability Code. Recoverability codes are assigned to items to indicate the disposition action on unserviceable items. The recoverability code is shown in the fifth position of the SMR code as follows:

Recoverability Code	Application/Explanation
Z -	Nonreparable item. When unserviceable, condemn and dispose of the item at the level of maintenance shown in the third position of the SMR code.
O -	Reparable item. When uneconomically reparable, condemn and dispose of the item at the AMC level.
F -	Reparable item. When uneconomically reparable, condemn and dispose of the item at the ASB level.

Source: https://assist.dla.mil -- Downloaded: 2016-12-09T23:24Z
Check the source to verify that this is the current version before use.

Recoverability

Code	Application/Explanation
D -	Reparable item. When beyond lower level repair capability, return to depot. Condemnation and disposal of item are not authorized below depot level.
L -	Reparable item. Condemnation and disposal not authorized below TASMG.
A -	Item requires special handling or condemnation procedures because of specific reasons (such as precious metal content, high dollar value, critical material, or hazardous material). Refer to appropriate manuals/directives for specific instructions.
G -	Field level reparable item. Condemn and dispose at either afloat or ashore intermediate levels. (Navy only)
K -	Reparable item. Condemnation and disposal to be performed at contractor facility.

NSN (Column 3). The NSN for the item is listed in this column.

CAGEC (Column 4). The Commercial and Government Entity Code (CAGEC) is a five-digit code that is used to identify the manufacturer, distributor, or Government agency/activity that supplies the item.

PART NUMBER (Column 5). Indicates the primary number used by the manufacturer (individual, company, firm, corporation, or Government activity), which controls the design and characteristics of the item by means of its engineering drawings, specifications, standards, and inspection requirements to identify an item or range of items.

NOTE

When you use an NSN to requisition an item, the item you receive may have a different P/N from the number listed.

DESCRIPTION AND USABLE ON CODE (UOC) (Column (6)). This column includes the following information:

1. The federal item name, and when required, a minimum description to identify the item.

2. P/Ns of bulk materials are referenced in this column in the line entry to be manufactured or fabricated.

3. Hardness Critical Item (HCI). A support item that provides the equipment with special protection from electromagnetic pulse (EMP) damage during a nuclear attack.

4. Refer to Usable on Code details presented later in this work package under SPECIAL INFORMATION.

5. Dot indentions indicate the relationship of the part (or parts) to its next higher assembly (NHA) in the tabular listing. The NHA for this part (or parts) is listed right before the part (or parts) that it is the NHA for. If the item is connected directly to (can be disassembled from) the item identified in the functional group code title for that specific tabular listing, it shall have one dot indentation. Otherwise, that item in the tabular list will not have a dot indention.

Source: https://assist.dla.mil -- Downloaded: 2016-12-09T23:24Z
Check the source to verify that this is the current version before use.

6. The statement END OF FIGURE appears just below the last item description in column (6) for a given Figure in both the repair parts list and special tools list work packages.

QTY (Column (7)). The QTY (quantity per Figure) column indicates the quantity of the item used in the breakout shown on the illustration/Figure, which is prepared for a functional group, sub functional group, or an assembly. A "V" appearing in this column instead of a quantity indicates that the quantity is variable and quantity may change from application to application.

(MC) Include for multiservice manuals involving the Marine Corps.

USMC QTY per Equip (Column 8). This column accommodates the Marine Corps quantity per equipment requirement.

EXPLANATION OF CROSS-REFERENCE INDEXES WORK PACKAGES FORMAT AND COLUMN

1. National Stock Number (NSN) Index Work Package. NSNs in this index are listed in National Item Identification Number (NIIN) sequence.

STOCK NUMBER Column. This column lists the NSN in NIIN sequence. The NIIN consists of the last nine digits of the NSN. When using this column to locate an item, ignore the first four digits of the NSN. However, the complete NSN should be used when ordering items by stock number.

For example, if the NSN is 5385-01-574-1476, the NIIN is 01-574-1476.

FIG. Column. This column lists the number of the Figure where the item is identified/located. The Figures are in numerical order in the repair parts list and special tools list work packages.

ITEM Column. The item number identifies the item associated with the Figure listed in the adjacent FIG. column. This item is also identified by the NSN listed on the same line.

2. Part Number (P/N) Index Work Package. Part numbers which are all numbers are listed first in ascending numeric sequence. Part numbers containing letters and numbers are listed in ascending alphanumeric sequence by part number after all the part numbers containing numbers only.

PART NUMBER Column. Indicates the P/N assigned to the item.

FIG. Column. This column lists the number of the Figure where the item is identified/located in the repair parts list and special tools list work packages.

ITEM Column. The item number is the number assigned to the item as it appears in the Figure referenced in the adjacent Figure number column.

Include 3, as applicable.

3. Reference Designator Index Work Package. Reference designators in this index are listed in ascending alphanumeric sequence (vertical arrangement of letter and number combination which places the first letter or digit of each group in order "A" through "Z," followed by the numbers "0" through "9" and each following letter or digit in like order).

REFERENCE DESIGNATOR Column. Indicates the reference designator assigned to the item.

Source: https://assist.dla.mil -- Downloaded: 2016-12-09T23:24Z
Check the source to verify that this is the current version before use.

FIG. Column. This column lists the number of the Figure where the item is identified/located in the repair parts list or special tools list work package.

ITEM Column. The item number is the number assigned to the item as it appears in the Figure referenced in the adjacent Figure number column.

SPECIAL INFORMATION

UOC. The UOC appears in the lower left corner of the Description Column heading. Usable on codes are shown as "UOC: ..." in the Description Entry (justified left) on the first line under the applicable item/nomenclature. Uncoded items are applicable to all models. Identification of the UOCs used in the RPSTL are:

Code	Used On
PAA	Model M114
PAB	Model M114A
PAC	Model M114B

Include appropriate UOC content, as applicable.

Fabrication Instructions. Bulk materials required to manufacture items are listed in the bulk material functional group of this RPSTL. Part numbers for bulk material are also referenced in the Description Column of the line item entry for the item to be manufactured/fabricated. Detailed fabrication instructions for items source coded to be manufactured or fabricated are found in (*enter applicable TM number or work package sequence number*).

Index Numbers. Items which have the word BULK in the Figure column will have an index number shown in the item number column. This index number is a cross-reference between the NSN / P/N index work packages and the bulk material list in the repair parts list work package.

For a combined narrative-RPSTL manual, associated publications shall not be included.

Associated Publications. The publication(s) listed below pertains to the (enter item name):

Publication	Short Title

The following paragraph shall appear only in the unit maintenance RPSTL special instructions.

Illustrations List. The illustrations in this RPSTL contain field authorized items. Illustrations published in (enter applicable TM number for the higher maintenance level RPSTL, e.g., for field, below depot sustainment, etc.) that contain field authorized items also appear in this RPSTL. The tabular list in the repair parts list work package contains only those parts coded "O" in the third position of the SMR code; therefore, there may be a break in the item number sequence.

HOW TO LOCATE REPAIR PARTS

1. When NSNs or P/Ns Are Not Known.

First. Using the table of contents, determine the assembly group to which the item belongs. This is necessary since Figures are prepared for assembly groups and subassembly groups, and lists are divided into the same groups.

Source: https://assist.dla.mil -- Downloaded: 2016-12-09T23:24Z
Check the source to verify that this is the current version before use.

Second. Find the Figure covering the functional group or the sub functional group to which the item belongs.

Third. Identify the item on the Figure and note the number(s).

Fourth. Look in the repair parts list work packages for the Figure and item numbers. The NSNs and part numbers are on the same line as the associated item numbers.

2. When NSN Is Known.

First. If you have the NSN, look in the STOCK NUMBER column of the NSN index work package. The NSN is arranged in NIIN sequence. Note the Figure and item number next to the NSN.

Second. Turn to the Figure and locate the item number. Verify that the item is the one you are looking for.

3. When P/N Is Known.

First. If you have the P/N and not the NSN, look in the PART NUMBER column of the P/N index work package. Identify the Figure and item number.

Second. Look up the item on the Figure in the applicable repair parts list work package.

Include 4 only if the RPSTL has a reference designator index work package.

4. When Reference Designator Is Known.

First. If you know the reference designator, look in the REFERENCE DESIGNATOR column of the reference designator index work package. Note the Figure and item number.

Second. Turn to the Figure and locate the item number. Verify that the item is the one you are looking for.

ABBREVIATIONS

Abbreviation	**Explanation**

Include all abbreviations used in the RPSTL."

F.5.3.5.3.3 (MC) Marine Corps only RPSTL introduction. The following introduction shall be used for RPSTL manuals for Marine Corps use only and shall not be used in joint service manuals:

"**INTRODUCTION**

SCOPE

This RPSTL lists and authorizes spares and repair parts; special tools; special test, measurement, and diagnostic equipment (TMDE); and other special support equipment required for performance of (*enter maintenance level*) maintenance of the (*enter item name*). It authorizes the requisitioning, issue, and disposition of spares, repair parts, and special tools as indicated by the source, maintenance, and recoverability (SMR) codes.

GENERAL

In addition to the Introduction work package, this RPSTL is divided into the following work packages.

Source: https://assist.dla.mil -- Downloaded: 2016-12-09T23:24Z
Check the source to verify that this is the current version before use.

1. Repair Parts List Work Packages. Work packages containing lists of spare and repair parts authorized for use in the performance of maintenance at the levels determined by the MAC/SMR code. These work packages also include parts which must be removed for replacement of the authorized parts. Parts lists are composed of functional groups in ascending alphanumeric sequence, with the parts in each group listed in ascending Figure and item number sequence. Sending units, brackets, filters, and bolts are listed with the component they mount on. Bulk materials are listed by item name in the Bulk Items work package which follows (*select the work package the bulk items follow: the last Parts List work package, the Special Tools Repair Parts work package, or Kits*) work package. *(choose one of the following) Repair parts kits are listed separately in their own functional group and work package* **OR** *Repair parts kits are listed at the end of the individual work packages.* Repair parts for reparable special tools are also listed in a separate work package. Items listed are shown on the associated illustrations.

2. *(Include the text in items 2 through 4 only if the described work package is included in the TM.)* Special Tools Repair Parts Work Package. This work package lists any spare parts required for the special tools, TMDE, or other support equipment listed in the Special Tools Work Package that are not listed in any other publication.

3. Kits work package. This work package lists all repair kits and their component parts.

4. Bulk Items Work Package. This work package lists all items identified as ‘bulk’ in the parts lists. Due to the nature of bulk items, this work package does not include a Figure.

5. Special Tools List Work Packages. This work package lists those special tools, special TMDE, and special support equipment authorized by this RPSTL (as indicated by Basis of Issue (BOI) information in the DESCRIPTION AND USABLE ON CODE (UOC) column). Tools that are components of common tool sets and/or Class VII are not listed.

6. Cross-Reference Indexes Work Packages. There are (*enter applicable number*) cross-reference indexes work packages in this RPSTL. The National Stock Number (NSN) Index work package refers you to the Figure and item number for each NSN listed in the RPSTL. The Part Number Index work package refers you to the Figure and item number for each part number listed in the RPSTL.” (*If reference designator is used enter: “The Reference Designator Index work package refers you to the Figure and item number of each reference designator listed in the RPSTL).*

EXPLANATION OF COLUMNS IN THE REPAIR PARTS LIST AND SPECIAL TOOLS LIST WORK PACKAGES

ITEM NO. (Column 1). Indicates the number used to identify items called out in the illustration.

SMR CODE (Column 2). The SMR code containing supply/requisitioning information, maintenance level authorization criteria, and disposition instruction in accordance with AR 700-82, as shown in the following breakout. This entry may be subdivided into 4 subentries, one for each service.

Source: https://assist.dla.mil -- Downloaded: 2016-12-09T23:24Z
Check the source to verify that this is the current version before use.

TABLE 1. SMR Code Explanation.

Source Code	Maintenance Code		Recoverability Code
XX	XX		X
1st two positions: How to get an item.	3rd position: Who can install, replace, or use the item.	4th position: Who can do complete repair on the item	5th position: Who determines disposition action on unserviceable items.

NOTE

Complete Repair: Maintenance capacity, capability, and authority to perform all corrective maintenance tasks of the "Repair" function in a use/user environment in order to restore serviceability to a failed item.

Source Code. The source code tells you how you get an item needed for maintenance, repair, or overhaul of an end item/equipment. Explanations of source codes follow:

TABLE 2. Source Code Explanation.

Source Code	Application/Explanation
PA PB PC PD PE PF PG PH PR PZ	Stock items; use the applicable NSN to requisition/request items with these source codes. They are authorized to the level indicated by the code entered in the third position of the SMR code. **NOTE** Items coded PC are subject to deterioration. Items coded PR or PZ are obsolete and may not be able to be ordered like other P coded items.
KD KF KB	Items with these codes are not to be requested/requisitioned individually. They are part of a kit that is authorized to the maintenance level indicated in the third position of the SMR code. The complete kit must be requisitioned and applied.
MO-Made at Field/Organizational level MF-Made at Field/Intermediate level MH- Field/Intermediate level ML-Made at Specialized Maintenance Facility MD-Made at depot MG- Navy only	Items with these codes are not to be requisitioned/requested individually. They must be made from bulk material which is identified by the P/N in the DESCRIPTION AND USABLE ON CODE (UOC) entry and listed in the bulk material group work package of the RPSTL. If the item is authorized to you by the third position code of the SMR code, but the source code indicates it is made at higher level, order the item from the higher level of maintenance.

Source: https://assist.dla.mil -- Downloaded: 2016-12-09T23:24Z
Check the source to verify that this is the current version before use.

AO-Assembled at Field/Organizational level AF-Assembled at Field/Intermediate level AH -Assembled at Field/Intermediate level AL-Assembled at Specialized Maintenance Facility AD-Assembled at depot AG-Navy only	Items with these codes are not to be requested/requisitioned individually. The parts that make up the assembled item must be requisitioned or fabricated and assembled at the level of maintenance indicated by the source code. If the third position of the SMR code authorizes you to replace the item, but the source code indicates the item is assembled at a higher level, order the item from the higher level of maintenance.
XA	Do not requisition an "XA" coded item. Order the next higher assembly. (Refer to NOTE below.)
XB	If an item is not available from salvage, order it using the CAGEC and P/N.
XC	Installation drawings, diagrams, instruction sheets, field service drawings; identified by manufacturer's P/N.
XD	Item is not stocked. Order an XD-coded item through local purchase or normal supply channels using the CAGEC and P/N given, if no NSN is available.

NOTE

Cannibalization or controlled exchange, when authorized, may be used as a source of supply for items with the above source codes except for those items source coded "XA" or those aircraft support items restricted by requirements of AR 750-1.

Maintenance Code. Maintenance codes tell you the level(s) of maintenance authorized to use and repair support items. The maintenance codes are entered in the third and fourth positions of the SMR code as follows:

Third Position. The maintenance code entered in the third position tells you the lowest maintenance level authorized to remove, replace, and use an item. The maintenance code entered in the third position will indicate authorization to the following levels of maintenance:

Maintenance Code	**Application/Explanation**
O -	Field/Organizational level maintenance can remove, replace, and use the item
F -	Field/Intermediate maintenance can remove, replace, and use the item.
H -	Field/Intermediate maintenance can remove, replace, and use the item.
L -	Specialized Maintenance Facility can remove, replace, and use the item.
G -	Afloat and ashore intermediate maintenance can remove, replace, and use the item (Navy only)

Source: https://assist.dla.mil -- Downloaded: 2016-12-09T23:24Z
Check the source to verify that this is the current version before use.

Maintenance Code	Application/Explanation
K -	Contractor facility can remove, replace, and use the item
Z -	Item is not authorized to be removed, replace, or used at any maintenance level
D -	Depot can remove, replace, and use the item.

Fourth Position. The maintenance code entered in the fourth position tells you whether or not the item is to be repaired and identifies the lowest maintenance level with the capability to do complete repair (perform all authorized repair functions).

Maintenance Code	Application/Explanation
O -	Field/Organizational level is the lowest class that can do complete repair of item
F -	Field/Intermediate is the lowest class that can do complete repair of the item.
H -	Field/Intermediate is the lowest class that can do complete repair of the item.
L -	Specialized Maintenance Facility is the lowest class that can do complete repair of the item.
D -	Depot is the lowest class that can do complete repair of the item.
G -	Both afloat and ashore intermediate levels are capable of complete repair of item. (Navy only)
K -	Complete repair is done at contractor facility
Z -	Nonreparable. No repair is authorized.
B -	No repair is authorized. No parts or special tools are authorized for maintenance of "B" coded item. However, the item may be reconditioned by adjusting, lubricating, etc., at the user level.

Recoverability Code. Recoverability codes are assigned to items to indicate the disposition action on unserviceable items. The recoverability code is shown in the fifth position of the SMR code as follows:

Recoverability Code	Application/Explanation
Z -	Nonreparable item. When unserviceable, condemn and dispose of the item at the level of maintenance shown in the third position of the SMR code.
O -	Reparable item. When uneconomically reparable, condemn and dispose of the item at the Field/Organizational level.
F -	Reparable item. When uneconomically reparable, condemn and dispose of the item at the Field/Intermediate level.
H -	Reparable item. When uneconomically reparable, condemn and dispose of the item at the Field/Intermediate level.
D -	Reparable item. When beyond lower level repair capability, return to depot. Condemnation and disposal of item are not authorized below depot level.

Source: https://assist.dla.mil -- Downloaded: 2016-12-09T23:24Z
Check the source to verify that this is the current version before use.

Recoverability

Code	Application/Explanation
L -	Reparable item. Condemnation and disposal not authorized below Specialized Maintenance Facility.
A -	Item requires special handling or condemnation procedures because of specific reasons (such as precious metal content, high dollar value, critical material, or hazardous material). Refer to appropriate manuals/directives for specific instructions.
G -	Field level reparable item. Condemn and dispose at either afloat or ashore intermediate levels. (Navy only)
K -	Reparable item. Condemnation and disposal to be performed at contractor facility.

NSN (Column 3). The NSN for the item is listed in this column.

CAGEC (Column 4). The Commercial and Government Entity Code (CAGEC) is a five-digit code that is used to identify the manufacturer, distributor, or Government agency/activity that supplies the item.

PART NUMBER (Column 5). Indicates the primary number used by the manufacturer (individual, company, firm, corporation, or Government activity), which controls the design and characteristics of the item by means of its engineering drawings, specifications, standards, and inspection requirements to identify an item or range of items.

NOTE

When you use an NSN to requisition an item, the item you receive may have a different P/N from the number listed.

DESCRIPTION AND USABLE ON CODE (UOC) (Column (6)). This column includes the following information:

1. The federal item name, and when required, a minimum description to identify the item.

2. P/Ns of bulk materials are referenced in this column in the line entry to be manufactured or fabricated.

3. Hardness Critical Item (HCI). A support item that provides the equipment with special protection from electromagnetic pulse (EMP) damage during a nuclear attack.

4. Refer to Usable on Code details presented later in this work package under SPECIAL INFORMATION.

5. Dot indentions indicate the relationship of the part (or parts) to its next higher assembly (NHA) in the tabular listing. The NHA for this part (or parts) is listed right before the part (or parts) that it is the NHA for. If the item is connected directly to (can be disassembled from) the item identified in the functional group code title for that specific tabular listing, it shall have one dot indentation. Otherwise, that item in the tabular list will not have a dot indention.

Source: https://assist.dla.mil -- Downloaded: 2016-12-09T23:24Z
Check the source to verify that this is the current version before use.

6. The statement END OF FIGURE appears just below the last item description in column (6) for a given Figure in both the repair parts list and special tools list work packages.

QTY (Column (7)). The QTY (quantity per Figure) column indicates the quantity of the item used in the breakout shown on the illustration/Figure, which is prepared for a functional group, sub functional group, or an assembly. A "V" appearing in this column instead of a quantity indicates that the quantity is variable and quantity may change from application to application.

EXPLANATION OF CROSS-REFERENCE INDEXES WORK PACKAGES FORMAT AND COLUMN

1. National Stock Number (NSN) Index Work Package. NSNs in this index are listed in National Item Identification Number (NIIN) sequence.

STOCK NUMBER Column. This column lists the NSN in NIIN sequence. The NIIN consists of the last nine digits of the NSN. When using this column to locate an item, ignore the first four digits of the NSN. However, the complete NSN should be used when ordering items by stock number.

For example, if the NSN is 5385-01-574-1476, the NIIN is 01-574-1476.

FIG. Column. This column lists the number of the Figure where the item is identified/located. The Figures are in numerical order in the repair parts list and special tools list work packages.

ITEM Column. The item number identifies the item associated with the Figure listed in the adjacent FIG. column. This item is also identified by the NSN listed on the same line.

2. Part Number (P/N) Index Work Package. Part numbers which are all numbers are listed first in ascending numeric sequence. Part numbers containing letters and numbers are listed in ascending alphanumeric sequence by part number after all the part numbers containing numbers only.

PART NUMBER Column. Indicates the P/N assigned to the item.

FIG. Column. This column lists the number of the Figure where the item is identified/located in the repair parts list and special tools list work packages.

ITEM Column. The item number is the number assigned to the item as it appears in the Figure referenced in the adjacent Figure number column.

Include 3, as applicable.

3. Reference Designator Index Work Package. Reference designators in this index are listed in ascending alphanumeric sequence (vertical arrangement of letter and number combination which places the first letter or digit of each group in order "A" through "Z," followed by the numbers "0" through "9" and each following letter or digit in like order).

REFERENCE DESIGNATOR Column. Indicates the reference designator assigned to the item.

FIG. Column. This column lists the number of the Figure where the item is identified/located in the repair parts list or special tools list work package.

Source: https://assist.dla.mil -- Downloaded: 2016-12-09T23:24Z
Check the source to verify that this is the current version before use.

ITEM Column. The item number is the number assigned to the item as it appears in the Figure referenced in the adjacent Figure number column.

SPECIAL INFORMATION

UOC. The UOC appears in the lower left corner of the Description Column heading. Usable on codes are shown as "UOC: ..." in the Description Entry (justified left) on the first line under the applicable item/nomenclature. Uncoded items are applicable to all models. Identification of the UOCs used in the RPSTL are:

Code	Used On
PAA	Model M114
PAB	Model M114A
PAC	Model M114B

Include appropriate UOC content, as applicable.

Fabrication Instructions. Bulk materials required to manufacture items are listed in the bulk material functional group of this RPSTL. Part numbers for bulk material are also referenced in the Description Column of the line item entry for the item to be manufactured/fabricated. Detailed fabrication instructions for items source coded to be manufactured or fabricated are found in (*enter applicable TM number or work package sequence number*).

Index Numbers. Items which have the word BULK in the Figure column will have an index number shown in the item number column. This index number is a cross-reference between the NSN / P/N index work packages and the bulk material list in the repair parts list work package.

For a combined narrative-RPSTL manual, associated publications shall not be included.

Associated Publications. The publication(s) listed below pertains to the (enter item name):

Publication	Short Title

The following paragraph shall appear only in the unit maintenance RPSTL special instructions

Illustrations List. The illustrations in this RPSTL contain field authorized items. Illustrations published in (enter applicable TM number for the higher maintenance level RPSTL, e.g., for field, below depot sustainment, etc.) that contain field authorized items also appear in this RPSTL. The tabular list in the repair parts list work package contains only those parts coded "O" in the third position of the SMR code; therefore, there may be a break in the item number sequence.

HOW TO LOCATE REPAIR PARTS

1. When NSNs or P/Ns Are Not Known.

First. Using the table of contents, determine the assembly group to which the item belongs. This is necessary since Figures are prepared for assembly groups and subassembly groups, and lists are divided into the same groups.

Second. Find the Figure covering the functional group or the sub functional group to which the item belongs.

Source: https://assist.dla.mil -- Downloaded: 2016-12-09T23:24Z
Check the source to verify that this is the current version before use.

Third. Identify the item on the Figure and note the number(s).

Fourth. Look in the repair parts list work packages for the Figure and item numbers. The NSNs and part numbers are on the same line as the associated item numbers.

2. When NSN Is Known.

First. If you have the NSN, look in the STOCK NUMBER column of the NSN index work package. The NSN is arranged in NIIN sequence. Note the Figure and item number next to the NSN.

Second. Turn to the Figure and locate the item number. Verify that the item is the one you are looking for.

3. When P/N Is Known.

First. If you have the P/N and not the NSN, look in the PART NUMBER column of the P/N index work package. Identify the Figure and item number.

Second. Look up the item on the Figure in the applicable repair parts list work package.

Include 4 only if the RPSTL has a reference designator index work package.

4. When Reference Designator Is Known.

First. If you know the reference designator, look in the REFERENCE DESIGNATOR column of the reference designator index work package. Note the Figure and item number.

Second. Turn to the Figure and locate the item number. Verify that the item is the one you are looking for.

ABBREVIATIONS

Abbreviation	**Explanation**

Include all abbreviations used in the RPSTL."

F.5.3.5.3.4 Indexed Repair Parts and Special Tool List (RPSTL) illustration and legend **<figure>**. When specified by the acquiring activity, an indexed RPSTL illustration and legend shall be added to the end of the introduction work package. The illustration shall have a legend that defines the item number, major functional group Figure title, and the respective Figure number. (Refer to FIGURE F-3.)

F.5.3.6 Repair parts list work package **<plwp>**. Each stand-alone RPSTL TM or RPSTL chapter in a combined manual shall contain at least one repair parts list work package **<plwp>**. (Refer to FIGURE F-4 for example of a repair parts list work package.) For less complex equipment with a small RPSTL, the RPSTL may be contained in a single work package or a few work packages. For complex equipment, each RPSTL work package shall have one Figure and one parts list. The Figure may have multiple sheets.

F.5.3.6.1 Work package identification information **<wpidinfo>**. Work package identification information is required for this work package. (Refer to 4.7.9.3.)

F.5.3.6.2 Work package initial setup **<initial_setup>**. Initial setup is not required for this work package.

F.5.3.6.3 Repair parts list **<pi.category>**. The repair parts lists shall have a figure **<figure>** and a list of repair part items **<pi.item>** as specified in F.5.3.6.3.1 and F.5.3.6.3.2. Repair parts list is **standard information per paragraph 4.7.13.7**.

Source: https://assist.dla.mil -- Downloaded: 2016-12-09T23:24Z
Check the source to verify that this is the current version before use.

F.5.3.6.3.1 Repair parts Figure title **<title>**. When available, Figure titles shall be taken from provisioning documentation. The RPSTL Figure title, the functional group title, and the applicable MAC title shall be the same. When no provisioning documentation is provided, the acquiring activity or contractor shall develop a title. This title shall be used consistently throughout the TM.

F.5.3.6.3.2 Repair part item **<pi.item>**. Each repair part shall include the column requirements in F.5.3.6.3.2.1 through F.5.3.6.3.2.8. Each repair part may also include the optional items in F.5.3.6.3.2.9 through F.5.3.6.3.2.12.1.

F.5.3.6.3.2.1 Item number column **<callout>**. Items shall be listed on the repair parts list (in the ITEM NO. column) by the same callout number shown on the associated figure. The items shall be listed in ascending alphanumeric sequence.

F.5.3.6.3.2.2 Source, Maintenance, and Recoverability (SMR) code column **<smr>**. The SMR code column shall include SMR codes assigned to the applicable items. For multiple service TMs, the SMR code column shall be divided into subcolumns, one for each service involved. Each service shall identify the appropriate SMR code subentry. When services share the same SMR code for an item, the SMR code shall be listed for each service. Refer to FIGURE F-5 for example of SMR codes in a multi-service RPSTL.

F.5.3.6.3.2.3 National Stock Number (NSN) column **<nsn>**. The NSN column shall include the NSN assigned to the applicable item.

F.5.3.6.3.2.4 Commercial And Government Entity Code (CAGEC) column **<cageno>**. The applicable five-digit CAGEC number, found at https://www.dlis.dla.mil/cage, shall appear in the CAGEC column.

F.5.3.6.3.2.5 Part number column **<partno>**. Each assigned part number shall be listed in the PART NUMBER column. When multiple part numbers exist for a single item (e.g., an end-item design number and a subsidiary suppliers number), the part number column shall list the manufacturer's number. The subsidiary identification information shall be included in the description column. (Refer to F.5.3.6.3.2.6.)

F.5.3.6.3.2.6 Description and Usable On Code (UOC) column. The DESCRIPTION AND USABLE ON CODE (UOC) column shall include the following information.

F.5.3.6.3.2.6.1 Functional group header **<fncgrp>**. The functional group header shall precede the first repair part item in the description column. The header shall consist of the functional group number and title **<fnccode>** appearing on the top line(s). The next line(s) below shall include the Figure number and the Figure title **<fnctitle>**. The functional group codes shall not exceed 11 characters.

F.5.3.6.3.2.6.2 Item name **<name>**. The item name shall consist of the official nomenclature (Refer to 4.7.25.2). If the item is an HCI or ESD item, the symbol HCI and/or ESD shall precede the item name.

F.5.3.6.3.2.6.3 Description **<desc>**. The description shall consist of the data from the provisioning document. The **<desc>** may also contain other information to assist in identifying the item. This includes, but is not limited to, original manufacturer's part number, Military Specification part numbers, or specific physical information about the item.

Source: https://assist.dla.mil -- Downloaded: 2016-12-09T23:24Z
Check the source to verify that this is the current version before use.

F.5.3.6.3.2.6.4 Indentions. The item name listed in the DESCRIPTION AND USABLE ON CODE (UOC) column shall be indented using dots to show the disassembly parts relationship within the figure. (Refer to FIGURE F-6.) No more than 5 indentures (dots) shall be used.

F.5.3.6.3.2.6.5 Usable On Code (UOC) **<uoc>**. When an item has multiple configurations or multiple models, the three-position alphanumeric UOC, representing the applicable configuration in which the item is used, shall be placed on the last line under the item description. The letters "UOC:" followed by the applicable UOC shall be indented. (Refer to FIGURE F-4.) When an item is used on all configurations or when only one configuration is covered by the RPSTL, UOCs shall not be shown.

F.5.3.6.3.2.6.6 Serial number application **<usbefserno>**. When part numbers of spare/repair items are not the same for all serial numbered equipment of the same model, a statement identifying the Usable Effective (USBL EFF) serial numbers shall be placed on the last line under the item description. The letters “USBL EFF” followed by the applicable serial numbers shall be indented (e.g., USBL EFF SER NOS 1719-1941). When an item is used on all models or when only one configuration is covered by the RPSTL, serial numbers shall not be shown.

F.5.3.6.3.2.6.7 Assembled items. Spare and repair parts that are part of a nonstocked assembled item (source coded "AO," "AF," "AH," “AL,” or "AD") shall be assigned item numbers on illustrations and shall be listed in item number sequence on the repair parts list. These items/parts shall be listed immediately below the item to be assembled on the repair parts list. When a particular illustration does not show the parts breakdown of the nonstocked assembly, reference shall be made to the breakdown illustration in the RPSTL. Instructions, drawings, charts, and tables showing how to assemble assemblies source coded "A( )" shall not appear in the RPSTL, but shall appear in the list of manufactured items (refer to E.5.3.10) or by reference to the applicable assembled items maintenance TM if one is available.

F.5.3.6.3.2.6.8 Manufactured items. All items source coded "MO," "MF," "MH," “ML,” or "MD" shall have the statement in the DESCRIPTION AND USABLE ON CODE (UOC) column **<desc>** as follows: "MAKE FROM (*enter applicable bulk material or other replaceable item name, CAGEC, and part number*)." Material that is used to make items shall also be shown in a separate bulk items work package **<bulk_itemswp>.** (Refer to F.5.3.9.) Instructions, drawings, charts, and tables required to show how items are made shall not be contained in the RPSTL; but shall appear in the illustrated list of manufactured items (refer to E.5.3.10).

F.5.3.6.3.2.6.9 Kits and kit repair parts. Kits and repair parts shall conform to the format of either option 1 (refer to FIGURE F-7) or option 2 (refer to FIGURE F-8), as specified by the acquiring activity. Only one option is to be used in a weapons systems RPSTL listing:

a. Option 1 (kits):

(1) Option 1 kits shall appear at the end of the associated parts list. As specified by the acquiring activity, the ITEM NO. column **<callout>** for kits shall be either left blank or list an alphabetical character(s). The QTY column **<qty>** for kits shall be a “V” (variable) when the exact quantity may vary. (Refer to FIGURE F-7.)

Source: https://assist.dla.mil -- Downloaded: 2016-12-09T23:24Z
Check the source to verify that this is the current version before use.

(2) Option 1 (parts) **<kititem>**. Option 1 kit repair parts shall be listed with their applicable Figure and appear in item number sequence. The statement "part of Kit P/N (enter kit P/N)" shall follow item name **<name>**. Kit repair parts shall also be listed under the kit list at the end of the parts list. Parts of the kit list shall be indented and listed alphabetically by item name or in item number sequence immediately below the kit item name. The quantity **<qty>** (in parentheses), Figure number, and item number **<callout>** shall follow the repair part item name.

b. Option 2 (kits) **<kitswp>**.

(1) Option 2 kits shall be listed in the kit parts list work package **<kitswp>.** (Refer to F.5.3.8.)

(2) Option 2 (parts) **<pi.item>**. Option 2 kit repair parts shall appear in the parts list by item number as shown on the associated Figure. They shall be listed in item number sequence. The statement "PART OF KIT P/N *(enter kit part number)*" shall follow the item name.

F.5.3.6.3.2.6.10 End of figure statement. The statement "**END OF FIGURE"** shall appear below the last item described in the column for each of the tabular lists in the repair parts list and the special tools list work packages to indicate the end of the work packages.

F.5.3.6.3.2.7 Quantity column **<qty>**. The number in the QTY column shall represent the number of times the item appears in the illustration/Figure with the associated item number. When a definite quantity cannot be determined because the number of uses per equipment or the size/length of an item may vary with each piece of equipment, the letter "V" shall be placed in the left position of the QTY column.

F.5.3.6.3.2.8 (MC) United States Marine Corp. (USMC) quantity per equipment column **<qty_per_end_item>**. The number in the USMC QTY per Equip column shall represent the total quantity for all the occurrences of that part in all the repair parts lists. This column shall be included in multi-service manuals involving the Marine Corps.

F.5.3.6.3.2.9 Mandatory replacement **<mrp>**. Information on mandatory replacement may be included in the RPSTL in addition to the mandatory replacement parts list work package.

F.5.3.6.3.2.10 Unit of issue **<ui>**. The unit of issue for the item may be included.

F.5.3.6.3.2.10.1 Unit of measure 'um'. The unit of measure for the item may be included. When used, the unit of measure is an attribute of the **<ui>** element and the unit of issue **<ui>** must be entered.

F.5.3.6.3.2.11 Reference designator **<refdes>**. The reference designator for the item may be included.

F.5.3.6.3.2.12 Next higher assembly **<nha_item>**. Information on the next higher assembly may be included. Refer FIGURE F-6 for example.

F.5.3.6.3.2.12.1 Parts breakdown reference **<part.breakdown.ref>**. A reference to parts breakdown for the item may be included.

Source: https://assist.dla.mil -- Downloaded: 2016-12-09T23:24Z
Check the source to verify that this is the current version before use.

F.5.3.6.4 Basic Issue Items (BII) (repair parts). Repair parts for reparable BII that do not have separate operator TMs, but are authorized in the RPSTL, shall be listed in a functional group titled **<fnctitle>** BASIC ISSUE ITEMS (REPAIR PARTS). Items listed in functional and sub functional groups shall be listed and identified with the same basic columnar data required for the end item repair parts. BII shall be supported by illustrations.

F.5.3.6.5 Expendable and durable items. Expendable and durable items shall not be listed in the RPSTL. These items shall appear in the expendable and durable items work package **<explistwp>** (refer to G.5.7) in the Support Information Chapter.

F.5.3.7 Repair parts for special tools list work package **<stl_partswp>**. The special tools repair parts list work package shall be prepared when all the following conditions in a through c are met. This work package shall follow the last repair parts list work package **<plwp>** and shall precede the kit parts list work package **<kitswp>,** bulk items work package **<bulk_itemswp>**, or special tools list work package **<stlwp>**. The work package data requirements are specified in F.5.3.7.1 through F.5.3.7.3.

a. The RPSTL identifies the special tool in the special tools list work package. (Refer to F.5.3.10.)
b. The special tool has repair parts that may be replaced at any maintenance level covered in the TM.
c. The special tool does not have repair instructions and/or parts listed in a TM for the special tool.

F.5.3.7.1 Work package identification information **<wpidinfo>**. Work package identification information is required for this work package. (Refer to 4.7.9.3.)

F.5.3.7.2 Work package initial setup **<initial_setup>**. Initial setup is not required for this work package.

F.5.3.7.3 Special tools repair parts items list **<pi.category>**. When developing the special tools repair parts items list, the requirements in F.5.3.6.3.2 shall be used except as specified in F.5.3.7.3.1.

F.5.3.7.3.1 Functional group header **<fncgrp>**. The functional group header shall precede the first special tools repair part item in the DESCRIPTION AND USABLE ON CODE (UOC) column. The functional group number and title **<fnccode>** shall be “SPECIAL TOOLS (REPAIR PARTS)” appearing on the top line(s). The next line(s) below shall be the Figure number and the Figure title **<fnctitle>**.

F.5.3.8 Kit parts list work package **<kitswp>**. A kits parts work package **<kitswp>** (refer to FIGURE F-8) shall be prepared when kit parts are listed separately in accordance with F.5.3.6.3.2.6.9b (Option 2 (kits)). The work package shall follow the last repair parts list work package **<plwp>** or repair parts for special tools list work package **<stl_partswp>**, when provided, and shall precede the bulk items list work package **<bulk_itemswp>**, if provided, or special tools list work package **<stlwp>**. The work package consists of one or more kits part item lists **<pi.category>** organized by functional group. The work package data requirements are specified in F.5.3.8.1 through F.5.3.8.3. **TEXT DELETED**

Source: https://assist.dla.mil -- Downloaded: 2016-12-09T23:24Z
Check the source to verify that this is the current version before use.

F.5.3.8.1 Work package identification information **<wpidinfo>**. Work package identification information is required for this work package. (Refer to 4.7.9.3.)

F.5.3.8.2 Work package initial setup **<initial_setup>**. Initial setup is not required for this work package.

F.5.3.8.3 Kits part items list **<pi.category>**. The kits part items list shall be listed alphanumerically by part number in the PART NUMBER column. The requirements defined in F.5.3.6.3 shall be used except as specified in F.5.3.8.3.1 through F.5.3.8.3.3. Kit parts list is **standard information per paragraph 4.7.13.7.**

F.5.3.8.3.1 Functional group header **<fncgrp>**. The functional group header shall precede the first bulk item in the DESCRIPTION AND USABLE ON CODE (UOC) column. The functional group number and title **<fnccode>** shall be "REPAIR KITS" appearing on the top line(s). The next line(s) below shall be the Figure number and the Figure title **<fnctitle>**.

F.5.3.8.3.2 Kit part item group **<kititem>**. Parts in the kit group, in the DESCRIPTION AND USABLE ON CODE (UOC) column, shall be indented two positions and listed alphabetically by item name or in item number sequence under their kit name. Kit parts shall be listed by item names **<name>**, the quantity (in parentheses) **<qty>**, the Figure number, and the item numbers **<callout>** that appear in the basic parts list.

F.5.3.8.3.3 Kits part item quantity **<qty>**. The QTY column entry for kits part shall contain a "V" (variable) when the exact quantity may vary.

F.5.3.9 Bulk items work package **<bulk_itemswp>**. A bulk items work package shall be prepared whenever bulk items are required in the repair of any parts listed in a parts list, special tool list or repair kit. The work package shall not have an illustration. The work package data requirements are specified in F.5.3.9.1 through F.5.3.9.3. Bulk items list is **standard information per paragraph 4.7.13.7**.

F.5.3.9.1 Work package identification information **<wpidinfo>**. Work package identification information is required for this work package. (Refer to 4.7.9.3.)

F.5.3.9.2 Work package initial setup **<initial_setup>**. Initial setup is not required for this work package.

F.5.3.9.3 Bulk item **<pi.item>**. Items in the bulk items list shall be listed alphabetically by item name in the DESCRIPTION AND USABLE ON CODE (UOC) column. (Refer to FIGURE F-9.) The requirements defined in F.5.3.6.3.2 shall be used except as specified in F.5.3.9.3.1 and F.5.3.9.3.2.

F.5.3.9.3.1 ITEM column **<callout>**. Numbers in the ITEM column of bulk material list apply to the FIG. BULK only and shall not be associated with item numbers (callouts appearing on the illustrations/Figures).

F.5.3.9.3.2 Functional group header **<fncgrp>**. The functional group header shall precede the first bulk item in the DESCRIPTION AND USABLE ON CODE (UOC) column. The functional group number and title **<fnccode>** shall be "BULK MATERIAL" appearing on the top line(s). The next line(s) below shall be the Figure number and the Figure title **<fnctitle>** and titled "FIG. BULK."

Source: https://assist.dla.mil -- Downloaded: 2016-12-09T23:24Z
Check the source to verify that this is the current version before use.

F.5.3.10 Special tools list work package **<stlwp>**. A special tools list work package shall be prepared for special tools, special TMDE, and other special support equipment authorized for maintenance of the end item/assembly. (Refer to FIGURE F-10.) Repair parts for special tools listed in this work package that have their own TM shall not be listed in the repair parts for special tools list work package. (Refer to F.5.3.7.) These tools shall be listed in the format and data requirement in F.5.3.10.1 through F.5.3.10.3.6. **TEXT DELETED**

F.5.3.10.1 Work package identification information **<wpidinfo>**. Work package identification information is required for this work package. (Refer to 4.7.9.3.)

F.5.3.10.2 Work package initial setup **<initial_setup>**. Initial setup is not required for this work package.

F.5.3.10.3 Special tools list **<pi.category>**. The special tools list requirements in F.5.3.6.3 shall be used except as specified in F.5.3.10.3.1 through F.5.3.10.3.6. Special tools list is **standard information per paragraph 4.7.13.7**

F.5.3.10.3.1 Item number column. Items shall be listed on the special tools list (in the ITEM NO. column) by the same callout number shown on the associated Figure. The items shall be listed in ascending alphanumeric sequence.

F.5.3.10.3.2 Functional group header **<fncgrp>**. The functional group header shall precede the first bulk item in the DESCRIPTION AND USABLE ON CODE (UOC) column. The functional group number and title **<fnccode>** shall be “SPECIAL TOOLS” appearing on the top line(s). The next line(s) below shall be the Figure number and the Figure title **<fnctitle>**.

F.5.3.10.3.3 D-coded items. When a depot level RPSTL does not exist and items are maintained at depot level, they shall be identified with a "D" in the third position of the SMR code in the highest level RPSTL prepared.

F.5.3.10.3.4 Basis of Issue (BOI) **<boi>**. The BOI **<boi>** shall be placed on the last line under the item description, in the DESCRIPTION AND USABLE ON CODE (UOC) column, for individual items, sets, or kits. The BOI shall indicate the quantity of the items, e.g., sets, or kits authorized to support a quantity of end items/assembly(s) or a specific military unit. For example, BOI: 1 auth for 1-12 equip or BOI: 1 per BN HQ when BN has SVC CO.

F.5.3.10.3.5 Quantity column. The QTY column shall be left blank.

F.5.3.10.3.6 Components list **<kititem>**. Components of special tool sets and kits, in the DESCRIPTION AND USABLE ON CODE (UOC) column, shall be listed in Figure and item number sequence **<callout>**. The component shall be indented two positions and listed by item name **<name>**, the Figure number, and the item numbers **<callout>**. Quantities of components **<qty>** shall be included in BOI statement. (Refer to F.5.3.10.3.4.)

F.5.3.11 Cross-reference index work packages.

F.5.3.11.1 National stock number (NSN) index work package **<nsnindxwp>**. This work package shall be prepared (refer to FIGURE F-11). The index (**standard information per paragraph 4.7.13.7**) shall be in ascending numeric sequence by the National Item Identification Number (NIIN) (the last nine digits of the NSN). This index shall be listed in the format and data requirement in F.5.3.11.1.1 through F.5.3.11.1.3.

Source: https://assist.dla.mil -- Downloaded: 2016-12-09T23:24Z
Check the source to verify that this is the current version before use.

F.5.3.11.1.1 Work package identification information **<wpidinfo>**. Work package identification information is required for this work package. (Refer to 4.7.9.3.)

F.5.3.11.1.2 Work package initial setup **<initial_setup>**. Initial setup is not required for this work package.

F.5.3.11.1.3 National Stock Number (NSN) index **<nsnindx>**. Each line entry **<nsnindxrow>** shall list the complete NSN for each NSN assigned to the applicable repair part or special tool item followed by any figure numbers and item numbers **<callout>** where the NSN appears. The NSN **<nsn>** line entry shall identify the first figure number and item number **<callout>** for which the stock number is applicable. The NSN shall not be repeated on the same page of the index for each additional figure number and item number **<callout>** identified by that NSN. When NSN references carry over to another page, the carried over NSN entry shall appear at the top of the list.

F.5.3.11.2 Part number index work package **<pnindxwp>**. This work package shall be prepared (refer to FIGURE F-12). The index (**standard information per paragraph 4.7.13.7**) shall be in ascending order by part number. Part numbers which are all numbers shall be in numeric order and listed first before any part numbers containing letters. Part numbers containing letters and numbers shall be listed in alphanumeric sequence by part number after all the part numbers containing only numbers. This index shall be in accordance with the format and data requirement in F.5.3.11.2.1 through F.5.3.11.2.3.

F.5.3.11.2.1 Work package identification information **<wpidinfo>**. Work package identification information is required for this work package. (Refer to 4.7.9.3.)

F.5.3.11.2.2 Work package initial setup **<initial_setup>**. Initial setup is not required for this work package.

F.5.3.11.2.3 Part number index **<pnindx>**. Each line entry **<pnindxrow>** shall list the part numbers assigned to applicable repair part or special tool items followed by any figure numbers and item numbers **<callout>** where the part number appears. The part number **<partno>** line entry shall identify the first figure number and item number **<callout>** for which the part number is applicable. The part number shall not be repeated on the same page of the index for each additional Figure number and item number **<callout>** identified by that part number. When part number references carry over to another page, the carried over part number entry shall appear at the top of the list.

F.5.3.11.3 Reference designator index work package **<refdesindxwp>**. A reference designator work package (refer to FIGURE F-13) shall be prepared as required. The index (**standard information per paragraph 4.7.13.7**) shall be in alphanumeric sequence by reference designators. This index shall be listed in the format and data requirement in F.5.3.11.3.1 through F.5.3.11.3.3.

F.5.3.11.3.1 Work package identification information **<wpidinfo>**. Work package identification information is required for this work package. (Refer to 4.7.9.3.).

F.5.3.11.3.2 Work package initial setup **<initial_setup>**. Initial setup is not required for this work package.

Source: https://assist.dla.mil -- Downloaded: 2016-12-09T23:24Z
Check the source to verify that this is the current version before use.

F.5.3.11.3.3 Reference designator index **<refdesindx>**. Each line entry **<refdesindxrow>** shall list each reference designator assigned to the applicable repair part or special tool item followed by any figure numbers and item numbers **<callout>** where the reference designator appears. The reference designator **<refdes>** line entry shall identify the first Figure number and item number **<callout>** for which the reference designator is applicable. The reference designators shall not be repeated on the same page of the index for each additional Figure number and item number **<callout>** identified by that reference designator. When reference designator references carry over to another page, the carried over reference designator entry shall appear at the top of the list.

F.5.3.11.4 Bulk Figure reference. When entries in either the NSN or the part number index references bulk material, the word “BULK” shall appear in the FIG. column. The numbers in the ITEM No. column shall refer to the item number list in the bulk Figure located in the bulk functional group list and shall not refer to item numbers on an illustration.

F.5.3.11.5 Sets and kits. Part numbers for sets/kits shall be cross-referenced to NSN, figure, and item number for the set/kit. When Option 1 is selected, the ITEM column shall either be blank or list an alphabetical character (e.g., "K" for KIT, "S" for SET, etc.). (Refer to F.5.3.6.3.2.6.9a) When Option 2 is selected, the FIG. column shall list the word KITS or SETS, as applicable. (Refer to F.5.3.6.3.2.6.9b.)

F.5.3.12 Illustrations. Additional RPSTL specific illustration requirements are described in F.5.3.12.1 through F.5.3.12.4.

F.5.3.12.1 Arrangement of illustrations. All illustrations prepared for spares, repair parts, special tools, special TMDE, and other special support equipment shall be arranged in figure number sequence. They shall precede their companion parts list (on the left-hand page preceding the parts list or at the top of the same page of the parts list). Illustrations shall not be duplicated to provide facing page illustrations for the second and subsequent pages of the companion parts list. Illustrations shall not be duplicated to show different models or configurations of an assembly when UOCs can be assigned to indicate differences in configurations. (Refer to F.5.3.4 for RPSTL work package layout requirements to achieve facing page layout.)

F.5.3.12.2 Use of illustrations. Foldout and foldout-foldup illustrations shall not be used in RPSTLs. References to illustrations in other TMs or to illustrations in the narrative portion of a combined maintenance TM with a RPSTL shall not be made. Landscape pages shall not be prepared except for RPSTLs supporting nuclear weapons (regulated by the Department of Energy/Defense Nuclear Agency). For clarity, multisheet illustrations may be used.

F.5.3.12.3 Identical parts/item numbers. Identical parts (same part number) appearing in a Figure (illustration) having only one FGC shall have the same item number. If a figure has two or more FGCs/assemblies, only the identical parts with identical SMR codes within each FGC/assembly shall have the same item number.

F.5.3.12.4 Identical assemblies. When two or more identical assemblies (same part number) exist in different places, i.e., in the equipment, a breakdown of the parts shall be illustrated only once, i.e., the first time the assembly appears in the RPSTL. For subsequent times that the identical assembly appears, the assembly item name shall appear in the description and UOC column and be followed by the statement “SEE FIG ## FOR BREAKDOWN.”

Source: https://assist.dla.mil -- Downloaded: 2016-12-09T23:24Z
Check the source to verify that this is the current version before use.

F.6 **NOTES.**

The notes in section 6 apply to this appendix.

Source: https://assist.dla.mil -- Downloaded: 2016-12-09T23:24Z
Check the source to verify that this is the current version before use.

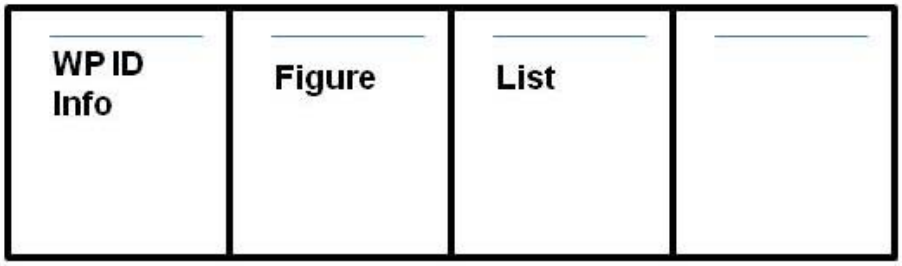

Single sheet illustration

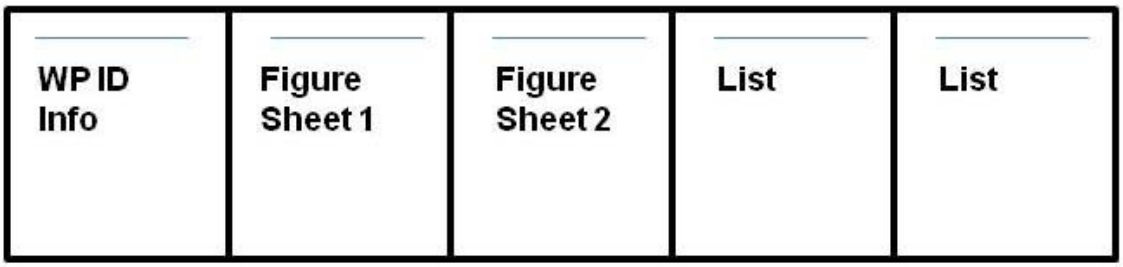

Multisheet illustration

FIGURE F-1. <u>RPSTL page layout scenarios.</u>

Source: https://assist.dla.mil -- Downloaded: 2016-12-09T23:24Z
Check the source to verify that this is the current version before use.

0001

TM X-XXXX-XXX-XX

MAINTAINER
REPAIR PARTS AND SPECIAL TOOLS LIST (RPSTL) INTRODUCTION
M198 HOWITZER

INTRODUCTION

SCOPE
This RPSTL lists the authorized spares and repair parts; special tools; special test, measurement, and diagnostic equipment (TMDE); and other special support equipment required for performance of maintainer maintenance of the M198 Howitzer. It authorizes the requisitioning, issue, and disposition of spares, repair parts, and special tools as indicated by the source, maintenance, and recoverability (SMR) codes.

GENERAL
In addition to the Introduction work package, this RPSTL is divided into the following work packages.

1. Repair Parts List Work Packages. Work packages containing lists of spare and repair parts authorized for use in the performance of maintenance at the levels determined by the MAC/SMR code. These work packages also include parts which must be removed for replacement of the authorized parts. Parts lists are composed of functional groups in ascending alphanumeric sequence, with the parts in each group listed in ascending figure and item number sequence. Sending units, brackets, filters, and bolts are listed with the component they mount on. Bulk materials are listed by item name in the Bulk Items work package which follows the Special Tools Repair Parts work package. Repair parts kits are listed at the end of the individual work packages. Repair parts for reparable special tools are also listed in a separate work package. Items listed are shown on the associated illustrations.

2. Special Tools Repair Parts Work Package. This work package lists any spare parts required for the special tools, TMDE, or other support equipment listed in the Special Tools Work Package that are not listed in any other publication.

3. Bulk Items Work Package. This work package lists all items identified as 'bulk' in the parts lists. Due to the nature of bulk items, this work package does not include a Figure.

4. Special Tools List Work Packages. This work package lists those special tools, special TMDE, and special support equipment authorized by this RPSTL (as indicated by Basis of Issue (BOI) information in the DESCRIPTION AND USABLE ON CODE (UOC) column). Tools that are components of common tool sets and/or Class VII are not listed.

5. Cross-Reference Indexes Work Packages. There are 2 cross-reference indexes work packages in this RPSTL. The National Stock Number (NSN) Index work package refers you to the Figure and item number for each NSN listed in the RPSTL. The Part Number Index work package refers you to the figure and item number for each part number listed in the RPSTL.

EXPLANATION OF COLUMNS IN THE REPAIR PARTS LIST AND SPECIAL TOOLS LIST WORK PACKAGES

0001-1

FIGURE F-2. Example of an introduction work package.

Source: https://assist.dla.mil -- Downloaded: 2016-12-09T23:24Z
Check the source to verify that this is the current version before use.

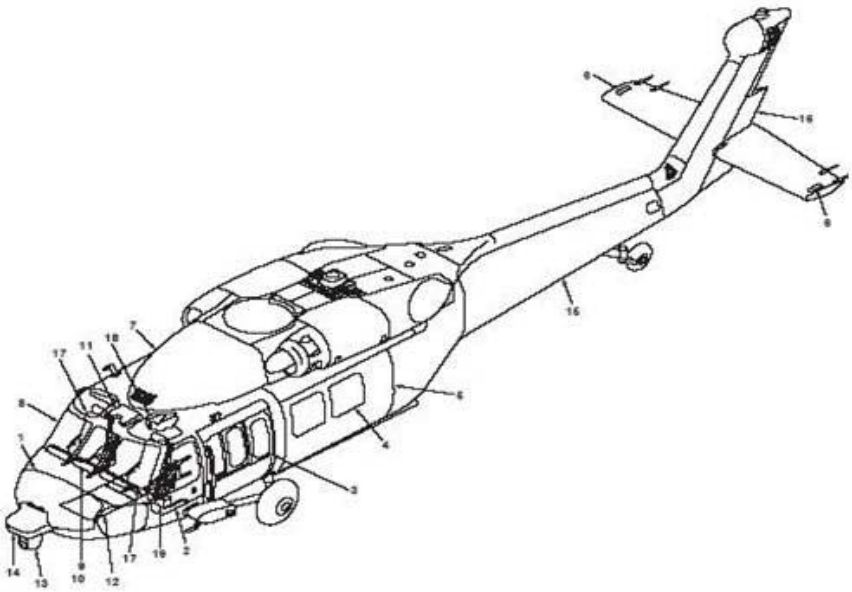

ITEM NO.	FIGURE TITLE	FIGURE NO.
1	Door Installation, Nose Section	4
2	Door Installation, Crew Nose Section	5
3	Gunners Window	13
4	Window Panel, Jettisonable, Cargo Door US-60Q	26
5	Door Installation, Troop/Cargo	25
6	Stabilator Installation, Tail Rotor Pylon Horizontal	42
7	Stabilator Installation, Tail Rotor Pylon Horizontal	56
8	Windshield Installation, Cockpit	65
9	Instrument Installation, Cockpit	66
10	Instrument Panel Installation UH-60Q	67
11	Console Installation Overhead	78
12	PM Equipment Bay, Lower	99
13	FLIR Turret Installation	109
14	FLIR Installation	110
15	Tail Cone Assembly	187
16	Tail Rotor Pylon Assembly	200
17	Seat Installation, Pilot And Copilot	213
18	Seat Installation, Troop And Gunner	230
19	Battery Installation	279

Figure 1. Exploded View, UH-60A, UH-60L, UH-60Q, HH-60L, and EH-60A Helicopter Airframe

FIGURE F-3. <u>Example of an indexed RPSTL illustration and legend.</u>

Source: https://assist.dla.mil -- Downloaded: 2016-12-09T23:24Z
Check the source to verify that this is the current version before use.

TM X-XXXX-XXX-XX 0092

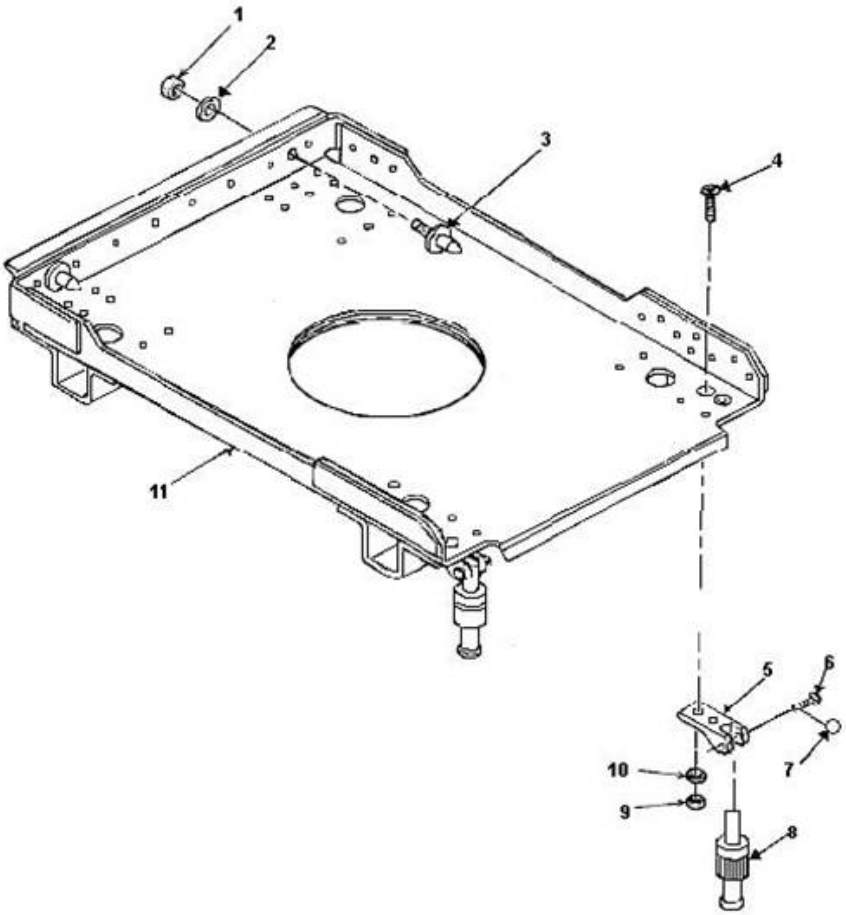

Figure 91. Electrical Equipment Rack, FMT 3234023-100

0092-2

FIGURE F-4. <u>Example of a repair parts list work package.</u>

Source: https://assist.dla.mil -- Downloaded: 2016-12-09T23:24Z
Check the source to verify that this is the current version before use.

(1) ITEM NO.	(2) SMR CODE	(3) NSN	(4) CAGEC	(5) PART NUMBER	(6) DESCRIPTION AND USABLE ON CODE (UOC)	(7) QTY
					GROUP 6025	
					FIG. 91 RACK, ELECTRONIC EQUIPMENT, FMT 3234023-100	
1	PACZZ	5310-00-894-3637	80205	NAS1291CAM	NUT, SELF-LOCKING, EX UOC:DCT, DCU.....	2
2	PACZZ	5310-00-515-7449	88044	AN960C416L	WASHER, FLAT UOC: DCT, DCU.....	2
3	PACZZ	5315-00-127-8038	82577	3210472	PIN, REAR GUIDE UOC: DCT, DCU.....	2
4	PACZZ	5305-00-958-3409	96906	MS2469S52	SCREW, MACHINE UOC: DCT, DCU.....	4
5	PACZZ	5340-01-257-1761	82577	3210471	HINGE, RACK UOC: DCT, DCU.....	2
6	PACZZ	5315-01-008-7083	82577	3210473	PIN, HINGE UOC: DCT, DCU.....	2
7	PACZZ	5315-00-288-2478	96906	MS24665-1011	PIN, COTTER UOC: DCT, DCU.....	2
8	PACZZ	5340-00-132-3718	82577	964037-IC	FASTENER, SELF LOCK UOC: DCT, DCU.....	2
9	PACZZ	5310-00-844-3302	80205	NAS1291C3	NUT, SELF LOCKING UOC: DCT, DCU.....	4
10	PACZZ	5310-00-781-9483	80205	NAS620C10L	WASHER, FLAT UOC: DCT, DCU.....	4
11	XACZZ		82577	6019031	RACK, SUBASSEMBLY.....	1
					END OF FIGURE	

FIGURE F-4. Example of a repair parts list work package - Continued.

Source: https://assist.dla.mil -- Downloaded: 2016-12-09T23:24Z
Check the source to verify that this is the current version before use.

TM X-XXXX-XXX-XX 0092

(1) ITEM NO	(2) SMR CODE a. ARMY	b. AIR FORCE	c. NAVY	d. USMC	(3) NSN	(4) CAGEC	(5) PART NUMBER	(6) DESCRIPTION AND USABLE ON CODE (UOC)	(7) QTY	(8) USMC QTY PER EQUIP
1	PACZZ	PAOZZ	PAOZZ	PAOZZ	5310-01-012-3595	81205	2740-0003	. NUT, PLAIN, ASSEMBLED	7	374
2	PACZZ	PAOZZ	PAOZZ	PAOZZ	XXXX-01-XXX-XXXX	19207	12325869	. BOLT, MACHINE	6	300
3	PACZZ	PAOZZ	PAOZZ	PAOZZ	XXXX-01-XXX-XXXX	96906	MS35207-269	. SCREW, MACHINE	1	1
4	XDCZZ	XB	XBOZZ	XBOZZ		30554	88-20036	. SPACER, TRAY, OUTPUT	1	1
5	PACZZ	PAOZZ	PAOZZ	PAOZZ	XXXX-01-XXX-XXXX	96906	MS27183-42	. WASHER, FLAT	1	1
6	XDCCC	XB	XBOZZ	XBOZZ		30554	88-20036	. OUTPUT BOX ASSEMBLY SEE FIGURE 13 FOR BREAKDOWN	1	1
7	PACZZ	PAOZZ	PAOZZ	PAOZZ	XXXX-01-XXX-XXXX	45722	P15121-64	. . SCREW, ASSEMBLED, WAS	2	25
8	PACZZ	PAOZZ	PAOZZ	PAOZZ	XXXX-01-XXX-XXXX	81205	2740-0003	. . NUT, PLAIN, ASSEMBLED	10	374
9	PACZZ	PAOZZ	PAOZZ	PAOZZ	XXXX-01-XXX-XXXX	96906	88-20314-4	. . CLAMP, LOOP	2	7
10	PACZZ	PAOZZ	PAOZZ	PAOZZ	XXXX-01-XXX-XXXX	45722	P15121-67	. . SCREW, ASSEMBLED, WAS	9	9
11	XDCZZ	XB	XBOZZ	XBOZZ		9R803	4300-12-XP-74	. . MARKER STRIP, TERMINAL	1	1
12	XDCZZ	XB	XBOZZ	XBOZZ		9R803	3300-14-XP-74	. . MARKER STRIP, TERMINAL	1	1
13	PACZZ	PAOZZ	PAOZZ	PAOZZ	XXXX-01-XXX-XXXX	78189	511-081800-00	. . NUT, PLAIN, ASSEMBLED	2	8
14	PACZZ	PAOZZ	PAOZZ	PAOZZ	XXXX-01-XXX-XXXX	45722	P15121-37	. . SCREW, ASSEMBLED, WAS	2	6
15	PACZZ	PAOZZ	PAOZZ	PAOZZ	XXXX-01-XXX-XXXX	96906	MS27183-42	. . WASHER, FLAT	6	87

FIGURE F-5. Example of a multi-service RPSTL.

Source: https://assist.dla.mil -- Downloaded: 2016-12-09T23:24Z
Check the source to verify that this is the current version before use.

TM X-XXXX-XXX-XX 0025

(1) ITEM NO.	(2) SMR CODE	(3) NSN	(4) CAGEC	(5) PART NUMBER	(6) DESCRIPTION AND USABLE ON CODE (UOC)	(7) QTY
					GROUP 14 ENGINE ASSEMBLY	
					FIG. 24 OIL PUMP ASSEMBLY	
1	XXXXX	XXXX-XX-XXX-XXXX	XXXXX	XXXXXXXXXX	.BOLT MACHINE	1
2	XXXXX	XXXX-XX-XXX-XXXX	XXXXX	XXXXXXXXXX	.WASHER, LOCK	1
3	XXXXX	XXXX-XX-XXX-XXXX	XXXXX	XXXXXXXXXX	.STRAINER, PUMP	1
4	XXXXX	XXXX-XX-XXX-XXXX	XXXXX	XXXXXXXXXX	.PUMP ROTARY.	1
5	XXXXX	XXXX-XX-XXX-XXXX	XXXXX	XXXXXXXXXX	. .REGULATOR PRESS	1
6	XXXXX	XXXX-XX-XXX-XXXX	XXXXX	XXXXXXXXXX	. .WASHER, KEY	1
7	XXXXX	XXXX-XX-XXX-XXXX	XXXXX	XXXXXXXXXX	. .SPACER, RING	5
8	XXXXX	XXXX-XX-XXX-XXXX	XXXXX	XXXXXXXXXX	. .GEAR, OIL PUMP	1
9	XXXXX	XXXX-XX-XXX-XXXX	XXXXX	XXXXXXXXXX	. .BOLT, MACHINE CAP SCREW 1/4-20X1-3/8 INCH	5
10	XXXXX	XXXX-XX-XXX-XXXX	XXXXX	XXXXXXXXXX	. .WASHER, LOCK, 1/4 IN MEDIUM SAE	1
11	XXXXX	XXXX-XX-XXX-XXXX	XXXXX	XXXXXXXXXX	. .LOCKWASHER, STEEL	2
12	XXXXX	XXXX-XX-XXX-XXXX	XXXXX	XXXXXXXXXX	. .SCREW, COVER	2
13	XXXXX	XXXX-XX-XXX-XXXX	XXXXX	XXXXXXXXXX	. .COVER, PUMP	2
14	XXXXX	XXXX-XX-XXX-XXXX	XXXXX	XXXXXXXXXX	. .PUMP, OIL BSC	6
15	XXXXX	XXXX-XX-XXX-XXXX	XXXXX	XXXXXXXXXX	. . .GEAR, DR SHAFT	1
16	XXXXX	XXXX-XX-XXX-XXXX	XXXXX	XXXXXXXXXX	. . .BODY ASSY	1
17	XXXXX	XXXX-XX-XXX-XXXX	XXXXX	XXXXXXXXXX	. . .SHAFT, IDLER	1
18	XXXXX	XXXX-XX-XXX-XXXX	XXXXX	XXXXXXXXXX	. . . .BODY, PUMP	1
					END OF FIGURE	

0025-3/blank

FIGURE F-6. <u>Example of indentions (next higher assembly).</u>

Source: https://assist.dla.mil -- Downloaded: 2016-12-09T23:24Z
Check the source to verify that this is the current version before use.

TM X-XXXX-XXX-XX 0011

(1) ITEM NO.	(2) SMR CODE	(3) NSN	(4) CAGEC	(5) PART NUMBER	(6) DESCRIPTION AND USABLE ON CODE (UOC)	(7) QTY
					GROUP 15 AUXILLARY POWER UNIT	
					FIG. 10 T62T-2A, T62T-2A1 GAS TURBINE ENGINE	
1	PACDD	2835-00-906-6766	55820	37688-0	ENGINE, GAS TURBINE T62T-2A UOC:NB4.....	2
2	PACDD	2835-00-804-8316	55820	37688-1000	ENGINE, GAS TURBINE T62T-2A1 UOC: NB5.....	2
3	PACZZ	5310-00-877-5797	96906	MS21044N3	.NUT, SELF-LOCKING UOC: NB4, NB5.....	2
4	PACZZ	5310-00-123-4567	88044	AN960DD10	.WASHER, FLAT UOC: NB4, NB5, NB6.....	4
5	KACZZ	5330-00-263-8030	96906	MS29512-06	.PACKING, PREFORMED PART OF KIT P/N 31766-1.....	2
6	PACCC	2910-00-919-2021	55820	28022-4	. .NOZZLE ASSEMBLY STATOR UOC: NB4, NB5, NB6.....	2
7	KDCZZ	5330-00-961-1463	96906	MS35769-5	. .GASKET PART OF KIT P/N 31766-1 UOC: NB4, NB5, NB6.....	2
8	PACZZ	5310-00-454-3762	71895	970HE1UPPH	NOZZLE, STATOR UOC: NB4, NB5, NB6.....	2
9	KACZZ	5330-00-961-1463	55820	26793-1	. .GASKET PART OF KIT P/N 31766-1 UOC: NB4, NB5, NB6.....	4
10	PACZZ	5330-00-954-1782	55820	31766-1	. .SEAL KIT, TURBINE.....	1
					GASKET (1) 10-7	
					GASKET (1) 10-9	
					PACKING, PREFORMED (10) 10-6	
					END OF FIGURE	

0011-3/blank

FIGURE F-7. Example of kits breakdown option 1.

Source: https://assist.dla.mil -- Downloaded: 2016-12-09T23:24Z
Check the source to verify that this is the current version before use.

(1) ITEM NO.	(2) SMR CODE	(3) NSN	(4) CAGEC	(5) PART NUMBER	(6) DESCRIPTION AND USABLE ON CODE (UOC)	(7) QTY
					GROUP 94 REPAIR KITS	
					FIG. KITS	
1	PAOZZ	2540-00-255-0775	78385	G7044528	PARTS KIT, HEATER, VE PERSONNEL HEATER.....	2
					BURNER ASSEMBLY (1) 252-6	
					SCREW, MACHINE (1) 252-8	
2	PAOZZ	2540-00-255-0777	78385	G704529	PARTS KIT, HEATER, VE PERSONNEL HEATER.....	2
					SCREW,MACHINE (1) 252-8	
					VAPORIZER (1) 252-11	
					WASHER, FLAT (1) 252-9	
					WASHER, FIBER (1) 252-10	
					WASHER, FLAT (1) 252-12	
					WICK (1) 252-13	
3	PAFZZ	2990-01-065-7617	19207	12259821	MOUNT, ENGINE TO BE INSTALLED ONLY AS A SET.....	2
					CAP, ENGINE MOUNT (1) 1-14	
					MOUNT, ENGINE (1) 1-18	
4	PAFZZ	4320-01-133-4069	62983	421242L	.PARTS KIT, HYDRAULIC.....	4
					GASKET (1) 239-5	
					PACKING, PREFORMED (1) 239-4	
					PACKING, PREFORMED (1) 239-6	
					PACKING, SEAL (4) 239-8	
					PARTS KIT, ROTARY PU (2) 239-9	
					PARTS KIT, ROTARY PU (10) 239-10	
					PIN (20) 239-14	
					PLATE, INLET SUPPORT (1) 239-13	
					PLATE, OUTLET SUPPORT (1) 239-7	
					RETAINER, PACKING (1) 239-12	
					RING (1) 239-12	
					ROTOR (1) 239-11	
					SCREW (2) 239-15	
					END OF FIGURE	

FIGURE F-8. Example of kits breakdown option 2.

Source: https://assist.dla.mil -- Downloaded: 2016-12-09T23:24Z
Check the source to verify that this is the current version before use.

TM X-XXXX-XXX-XX 0116

MAINTAINER
GROUP 9501 BULK MATERIAL

(1) ITEM NO.	(2) SMR CODE	(3) NSN	(4) CAGEC	(5) PART NUMBER	(6) DESCRIPTION AND USABLE ON CODE (UOC)	(7) QTY
					GROUP 9501 BULK MATERIAL	
					FIG. BULK	
1	PACZZ	5330-00-982-5130	81349	MILC7637TYP2	ASBESTOS SHEET, WOVE.....	1
2	XBCZZ		19207	RRC271	CHAIN, WELDLESS.....	1
3	PACZZ	5975-00-285-0907	97030	LOOM3/8ID	CONDUIT, NONMETALIC.....	1
4	PACZZ	9340-00-142-6860	19207	11633348	GLASS, LAMINATED.....	1
5	PACZZ	9340-00-285-6775	19200	8635931	GLASS, LAMINATED.....	1
6	PFCZZ	4720-00-809-2429	30299	FT3548-5	HOSE, AIRDUCT.....	1
7	PAFZZ	4720-00-001-0093	81349	MIL-H-13531	NOSE, ASSEMBLY, NONMETALIC...	1
8	XBCZZ		85757	3250-0610	HOSE, NONMETALIC.....	1
9	PAFZZ	4720-00-999-8994	01276	303-8	HOSE, NONMETALIC.....	1
10	PACZZ	4720-00-951-2433	96909	MS521301A229R	HOSE, NONMETALIC.....	1
11	PACZZ	4720-01-009-9058	85757	3250-1010	HOSE, NONMETALIC.....	1
12	PACZZ	4720-00-683-8830	81349	MIL-H-8788-4	HOSE, NONMETALIC.....	1
13	PACZZ	4720-00-999-4044	11083	3R7752	HOSE, PREFORMED.....	1
14	XBOZZ		81349	MIL-I-14511	INSULATION BOARD TH.....	1
15	PACZZ	9390-00-488-2106	19207	CPR102201	NONMETALLIC SPECIAL.....	1
16	PACZZ	5330-00-333-0313	81348	HHP151	RUBBER SHEET SOLID.....	1
17	XBCZZ		19207	10287823-7	RUBBER STRIP.....	1
18	PAFZZ	5330-01-040-8923	19207	CPR104394	SEAL, RUBBER CHANNEL.....	1
19	PAFZZ	5330-01-082-3792	19207	CPR102235	SEAL, RUBBER SPECIAL.....	1
20	PACZZ	5330-01-082-3793	19207	CPR102232	SEAL, RUBBER SPECIAL.....	1

0116-1

FIGURE F-9. Example of a bulk material list.

Source: https://assist.dla.mil -- Downloaded: 2016-12-09T23:24Z
Check the source to verify that this is the current version before use.

(1) ITEM NO.	(2) SMR CODE	(3) NSN	(4) CAGEC	(5) PART NUMBER	(6) DESCRIPTION AND USABLE ON CODE (UOC)	(7) QTY
					GROUP 30 SPECIAL TOOLS	
					FIG. 254	
1	PECDD	6625-01-169-5333	80058	TS-3920A/ASM	TEST SET, STABILIZATION (BOI: 1 AUTH PER 15 AIRCRAFT.....	1
1	PECDD	6625-01-266-1636	80058	TS-3920B/ASM	TEST SET, STABILIZATION (BOI: 1 AUTH PER 15 AIRCRAFT.....	1
2	XBCZZ		80063	A3012556	WEDGE, 30/60/90 DEG. (BOI: 1 AUTH PER TEST SET.....	1
3	XBCZZ		80063	A3012557	WEDGE, 05/85/90 DEG. (BOI: 1 AUTH PER TEST SET.....	1
4	XBCZZ		80063	A3012558	PIN, ALIGNMENT (BOI: 1 AUTH PER TEST SET).....	1
5	XBCZZ		80063	A3012559	FIXTURE, PROTRACTOR (BOI: 1 AUTH PER TEST SET).....	1
					END OF FIGURE	

FIGURE F-10. <u>Example of a special tools list work package.</u>

Source: https://assist.dla.mil -- Downloaded: 2016-12-09T23:24Z
Check the source to verify that this is the current version before use.

TM X-XXXX-XXX-XX 0101

MAINTAINER
NATIONAL STOCK NUMBER INDEX

STOCK NUMBER	FIG.	ITEM		STOCK NUMBER	FIG.	ITEM
5365-00-003-6807	4	4		5305-00-054-5651	9	5
5935-00-005-2826	3	1			28	5
5315-00-012-0123	65	1			90	1
5310-00-016-7216	28	12		5305-00-054-5652	52	1
5340-00-021-3495	77	20		5305-00-054-5653	28	6
	85	15		5305-00-054-6653	89	17
5310-00-027-7247	8	2		5305-00-054-6654	28	23
5310-00-030-0580	51	21		5305-00-054-6655	29	4
3110-00-034-5257	69	5			88	21
	72	5		5305-00-054-6657	29	18
	75	9		5305-00-054-6666	51	29
	77	8		5305-00-054-6669	1	10
	79	5		5305-00-054-9293	60	4
	81	10		5305-00-056-9961	9	3
	84	5			33	16
	85	3			88	35
5305-00-038-9048	45	27		5310-00-057-0573	33	8
5310-00-045-3296	77	25			52	2
	85	20			90	2
5310-00-045-4007	2	5		5310-00-058-1823	29	1
5305-00-052-6456	55	2			61	4
5310-00-054-0041	24	3		5315-00-058-6062	45	18
5305-00-054-5637	6	9		5305-00-059-3657	2	14
5305-00-054-5638	88	11		5305-00-059-3658	1	3
5305-00-054-5647	33	15		5305-00-059-3661	51	26
	51	25		5310-00-061-7326	29	19
5305-00-054-5648	10	1		5305-00-066-7327	88	37
	33	7		5305-00-066-7369	34	1
5305-00-054-5649	2	8		5365-00-067-3836	46	17
	29	13		5305-00-068-0543	45	9
	33	3		5365-00-068-8011	70	2
	51	15			80	2
	52	8		5975-00-074-2072	61	12
	89	3			88	33
5305-00-054-5650	51	3		5970-00-074-8780		

0101-1

FIGURE F-11. Example of a national stock number index work package.

Source: https://assist.dla.mil -- Downloaded: 2016-12-09T23:24Z
Check the source to verify that this is the current version before use.

TM X-XXXX-XXX-XX 0102

MAINTAINER
PART NUMBER INDEX

PART NUMBER	FIG.	ITEM		PART NUMBER	FIG.	ITEM
122467	31	2		DDM50PE	10	27
145999845	22	14		DM53744-21	8	32
37865411	10	8		DM53744-24	31	2
557699000345	17	15		DM53744-25	31	1
AN960C 10L	12	20		DM53745-25	15	16
AN960C4L	8	11			31	10
	9	44		DM53745-27	15	15
	12	24			31	9
	17	28		DM53745-28	32	1
AN960C416L	8	89		DSC7900-10-C-6	8	19
AN960C516L	8	66		EP15160	10	81
AN960C6	8	74		I/O-100-00000	21	3
	13	5			22	5
AN960C6L	27	6			23	3
AN960C616	27	22			24	2
AN960C8	8	41			25	2
	11	10			26	2
AN/960C816	17	9		JANTX1N1206A	12	1
AP373-95	8	84			14	3
AP373-96	12	15		JANTX1N4102-1	10	89
B3-14	17	12		JANTX1N4106-1	14	98
CA4342	27	23		JANTX1N4109-1	9	31
CA4440-4	16	54		JANTX1N4150-1	4	2
CD2-Z147-1	16	44			8	77
CKR05BX102M	10	7			9	4
CMR05F201JPDR	14	16			10	1
DB-3	16	65			14	2
DBM5W5P	15	17			28	1
	31	11		JANTX1N4572A-1	10	86
	32	2		JANTX1N4626-1	10	90
DBM5W5S	8	29			28	8
	31	3		JANTX1N4627	10	85
DBM50906-1	8	28		JANTX1N4627-1	14	99
	15	18		JANTX1N5419	9	1
	31	5			12	2
	32	4		JANTX1N5420	10	3

0102-1

FIGURE F-12. Example of a part number index work package.

Source: https://assist.dla.mil -- Downloaded: 2016-12-09T23:24Z
Check the source to verify that this is the current version before use.

TM X-XXXX-XXX-XX 0102

MAINTAINER
REFERENCE DESIGNATOR INDEX

REFERENCE DESIGNATOR	FIG.	ITEM		REFERENCE DESIGNATOR	FIG.	ITEM
S1	1	15		2A1A25	70	14
W2	1	3		2A1A26	70	14
2AT1	2	309		2A1A27	70	15
2AT10	2	552		2A1A28	70	16
2AT11	2	699		2A1A29	70	18
2AT12	2	699		2A1A4	70	8
2AT13	2	479		2A1A6	70	9
2AT14	2	479		2A1A7	70	9
2AT2	2	309		2A1A8	70	10
2AT3	2	558		2A1A9	70	11
2AT4	2	564		2A1DL1	70	25
2AT5	2	705		2A1DL2	70	25
2AT5	2	479		2A1DL3	70	25
2AT6	2	494		2A1DL4	70	25
2AT7	2	675		2A1DL5	70	25
2AT8	2	624		2A1DL6	70	25
2AT9	2	552		2A1J20	71	27
2A1	2	489		2A1J25	71	36
2A1AT2	71	30		2A1J29	71	34
2A1AT3	71	33		2A1W10	71	46
2A1A1	70	6		2A1W12	71	44
2A1A10	70	6		2A1W14	70	45
2A1A11	70	12		2A1W30	70	31
2A1A13	70	13		2A1W31	70	29
2A1A14	70	14		2A1W32	70	30
2A1A15	70	14		2A1W33	70	28
2A1A16	70	15		2A1W34	70	26
2A1A17	70	16		2A1W35	70	27
2A1A18	70	13		2A1W36	70	35
2A1A19	70	14		2A10	2	590
2A1A20	70	14		2A10A1	80	2
2A1A21	70	15		2A10A10	80	2
2A1A22	70	16		2A10A11	80	3
2A1A23	70	17		2A10A13	80	4
2A1A24	70	13		2A10A14	80	2

0102-1

FIGURE F-13. Example of a reference designator index work package.

Source: https://assist.dla.mil -- Downloaded: 2016-12-09T23:24Z
Check the source to verify that this is the current version before use.

This page intentionally left blank.

Source: https://assist.dla.mil -- Downloaded: 2016-12-09T23:24Z
Check the source to verify that this is the current version before use.

APPENDIX G
SUPPORTING INFORMATION

G.1 SCOPE.

G.1.1 Scope. This appendix establishes the technical content requirements for the preparation of supporting information for major weapon systems and their related systems, subsystems, equipment, assemblies, components, SRUs, and LRUs. This appendix is a mandatory part of this standard. The information contained herein is intended for compliance. The requirements are applicable for all maintenance levels/classes through overhaul (depot), including DMWRs and NMWRs.

G.2 APPLICABLE DOCUMENTS.

The applicable documents in section 2 apply to this appendix.

G.3 DEFINITIONS.

The definitions in section 3 apply to this appendix.

G.4 GENERAL REQUIREMENTS.

G.4.1 General. Supporting information shall be prepared for weapon systems, major equipment, components, and applicable support and interface equipment. Supporting information requirements are included for the preparation of technical data that supplements the specific operation and maintenance information contained in the TM. This supplemental information includes reference data and general maintenance and parts information with associated illustrations.

G.4.2 Maintenance level/class applicability. Requirements contained in this appendix are applicable to all maintenance levels/classes unless specifically labeled in bold and in parentheses. The labeled requirement may specify a specific level (e.g., **Field**) or a specific maintenance class (refer to 3.89) (e.g., **Maintainer** or **AMC**). The labeled requirement shall be applicable to all TMs containing that maintenance level/class. An explanation of applicable DA maintenance levels/classes is provided in section 3.

G.4.3 Preparation of digital data for electronic delivery. Data prepared and delivered digitally in accordance with this standard shall be XML tagged using the current Army DTD. Data shall be formatted for presentation using the Army style sheets. Refer to 4.6 for information on obtaining or accessing the Army DTD and style sheets. XML tags used in the DTD are noted throughout the text of this standard in bracketed, bold characters (e.g., **`<descwp>`**) as a convenience for the author and to ensure that the tags are used correctly when developing a document instance.

G.4.4 Use of the Document Type Definition (DTD)/style sheet. The DTD referenced in this appendix interprets the technical content and structure for the functional requirements contained in this standard. Development of the page-based TMs shall be accomplished through the use of this standard, the Army DTD, and the Army style sheets. MIL-HDBK-1222 provides further guidance and preferred style and format. The guidance in MIL-HDBK-1222 shall be followed unless it conflicts with the requirements in this standard.

Source: https://assist.dla.mil -- Downloaded: 2016-12-09T23:24Z
Check the source to verify that this is the current version before use.

G.4.5 Content structure. The examples provided herein are an accurate representation of the content structure requirements contained in this appendix and shall be followed to permit the effective use of the DTD.

G.4.6 Style and format. This standard provides style and format requirements for the technical content requirements described in this appendix. These requirements are considered mandatory and are intended for compliance.

G.4.7 Work package development. Data developed in accordance with this appendix shall be divided into work packages. These work packages should be stand alone and are broken into the following work package types: references, MAC intro, MAC, COEI/BII, AAL, expendable and durable items list, tool identification list, mandatory replacement parts list, and critical safety items. A work package shall contain all information and references required to support the work package type.

G.4.8 Safety devices and interlocks. Information shall be prepared pertaining to the purpose and location of all safety devices and interlocks in conjunction with the pertinent procedures.

G.4.9 Electrostatic Discharge (ESD) sensitive parts. If the equipment contains ESD sensitive parts, components, or circuits; cautions and ESD labels shall be incorporated into the applicable tasks and procedures to ensure ESD sensitive parts are not damaged or degraded during maintenance and operation. (Refer to 4.7.20 for requirements on labeling with ESD.) Actions which could damage ESD sensitive parts, but which are not directly related to handling or operation of ESD sensitive parts, shall not be annotated with the ESD acronym, but shall be preceded by a caution statement.

G.4.10 Nuclear hardness **<hcp>**. If the weapon system/equipment has nuclear survivability requirements (e.g., overpressure and burst, thermal radiation, electromagnetic pulse, or transient radiation effects on electronics), cautions and Hardness-Critical Process (HCP) labels shall be incorporated into the applicable tasks and procedures to ensure that the hardness of the equipment is not degraded during handling or operation. (Refer to 4.7.19 for requirements on labeling with HCP.) Actions which could degrade hardness, but which are not directly involved in establishing nuclear hardness, shall not be annotated with the acronym, but shall be preceded by a caution statement.

G.4.11 Selective application and tailoring of content using Appendix A matrixes. This standard contains some requirements that may not be applicable to the preparation of all TMs. Selective application and tailoring of requirements contained in this standard are the responsibility of the acquiring activity and shall be accomplished using APPENDIX A. The applicability of some requirements is also designated by one of the following statements: unless specified otherwise by the acquiring activity; as specified by the acquiring activity; or when specified by the acquiring activity.

G.5 **DETAILED REQUIREMENTS.**

G.5.1 Preparation of supporting information. Supporting information shall be developed as work packages. Supporting information work packages are described in G.5.2 through G.5.11. Supporting information work packages shall be placed in a single chapter called “Supporting Information.” These work packages shall be placed in the TM in the order in which they are presented herein, as applicable.

Source: https://assist.dla.mil -- Downloaded: 2016-12-09T23:24Z
Check the source to verify that this is the current version before use.

G.5.2 References work package **<refwp>**. This work package shall be prepared and list all publications referenced in the TM that are required by the user to operate and/or maintain the equipment. It shall consist of a scope and a publication list(s).

G.5.2.1 Work package identification information **<wpidinfo>**. This information is required for this work package. (Refer to 4.7.9.3.)

G.5.2.2 Work package initial setup **<initial_setup>**. Initial setup is not required for this work package.

G.5.2.3 Scope **<scope>**. Information concerning the use and content of the references work package shall be prepared. (Refer to FIGURE G-1.)

G.5.2.4 Publication list **<publist>**. Individual paragraphs shall be prepared for each publication type. All related/referenced publications, with the exception of those publications that are currently unpublished, shall be listed. This list shall identify the publication by number **<name>/<extref>/<link>** in alphanumeric sequence and shall also include the title **<title>**. If a publication is non-government, the source shall be given and all such publications shall be listed alphabetically by title. (Refer to FIGURE G-1.) If a LOAP exists, it may be referenced.

G.5.3 Maintenance Allocation Chart **(MAC) (Maintainer/AMC only)**. The MAC shall be prepared and include an introduction work package and a MAC work package. Non-Aviation MAC preparation instructions are discussed in G.5.3.1 and Aviation MAC preparation instructions are discussed in G.5.3.2.

G.5.3.1 Introduction for non-aviation Maintenance Allocation Chart (MAC) work package **<macintrowp>**.

G.5.3.1.1 Work package identification information **<wpidinfo>**. This information is required for this work package. (Refer 4.7.9.3.)

G.5.3.1.2 Work package initial setup **<initial_setup>**. Initial setup is not required for this work package.

G.5.3.1.3 Introduction **<intro>**. The following text shall be prepared and included verbatim. (Refer to FIGURE G-2.)

"**INTRODUCTION**

The Army Maintenance System MAC

This introduction provides a general explanation of the maintenance levels/classes, functions, and other information contained in the MAC.

The MAC (immediately following this introduction) designates overall authority and responsibility for the performance of all maintenance tasks on the identified end item or component. The application of the maintenance tasks to the end item or component shall be consistent with the capacities and capabilities of the designated maintenance levels/classes which are shown in the MAC in column (4). Column (4) is divided into two secondary columns. These columns indicate the maintenance levels/classes of 'Field' and 'Sustainment'. Each maintenance level column is further divided into two sub-columns. These sub-columns identify the maintenance classes and are as follows:

Source: https://assist.dla.mil -- Downloaded: 2016-12-09T23:24Z
Check the source to verify that this is the current version before use.

1. Field level maintenance classes:
    a. Crew (operator) maintenance. This is the responsibility of a using organization to perform maintenance on its assigned equipment. It normally consists of inspecting, servicing, lubricating, adjusting, and replacing parts, minor assemblies, and subassemblies. Items with a “C” (“O” for joint service reporting) in the third position of the Source, Maintenance, and Recoverability (SMR) code may be replaced at the crew(operator) class. A code of “C” (“O” for joint service) in the fourth position of the SMR code indicates complete repair is authorized at the crew (operator) class.
    b. Maintainer maintenance. This is maintenance accomplished on a component, accessory, assembly, subassembly, plug-in unit, or other portion by field level units. This maintenance is performed either on the system or after it is removed. An “F” in the third position of the SMR code indicates replacement of assemblies, subassemblies, or other components is authorized at this level. An “F” in the fourth position of the SMR code indicates complete repair of the identified item is allowed at the Maintainer class. Items repaired at this level are normally returned to the user after maintenance is performed.
2. Sustainment level maintenance classes:
    a. Below depot sustainment. This is maintenance accomplished on a component, accessory, assembly, subassembly, plug-in unit, or other portion either on the system or after it is removed. The item subject to maintenance has normally been forwarded to a maintenance facility away from the field level supporting units. An “H” in the third position of the SMR code indicates replacement of assemblies, subassemblies, or other components is authorized at this class. An "H" appearing in the fourth position of the SMR code indicates complete repair is possible at this class. Items are normally returned to the supply system after maintenance is performed at this class.
    b. Depot. This is maintenance accomplished on a component, accessory, assembly, subassembly, plug-in unit, or other portion either on the system or after it is removed. Assets to be repaired at this class are normally returned to an Army Depot or authorized contractor facility. The replace function for this class of maintenance is indicated by the letter "D" or "K" appearing in the third position of the SMR code. A "D" or "K" appearing in the fourth position of the SMR code indicates complete repair is possible at the depot sustainment maintenance level. Items are returned to the supply system after maintenance is performed at this class.

The tools and test equipment requirements table (immediately following the MAC) lists the tools and test equipment (both special tools and common tool sets) required for each maintenance task as referenced from the MAC.

Source: https://assist.dla.mil -- Downloaded: 2016-12-09T23:24Z
Check the source to verify that this is the current version before use.

The remarks table (immediately following the tools and test equipment requirements) contains supplemental instructions and explanatory notes for a particular maintenance task.

Maintenance functions (tasks)

Maintenance functions are limited to and defined as follows *(Functions/tasks may be removed from introduction if not used)*:

1. Inspect. Step-by-step instructions to determine the serviceability of an item by comparing its physical, mechanical, and/or electrical characteristics with established standards through examination (e.g., by sight, sound, or feel).
2. Test. Step-by-step instructions to verify serviceability by measuring the mechanical, pneumatic, hydraulic, or electrical characteristics of an item and comparing those characteristics with prescribed standards, e.g., load testing of lift devices or hydrostatic testing of pressure hoses. For software, to verify usability/operability/functionality of the software.
3. Service. Step-by-step instructions to be performed periodically to keep an item in proper operating condition such as replenishing fuel, lubricants, chemical fluids, or gases.
4. Adjust. Step-by-step instructions to maintain or regulate, within prescribed limits, by bringing into proper position, or by setting the operating characteristics to specified parameters.
5. Align. Step-by-step instructions to adjust specified variable elements of an item to bring about optimum or desired performance.
6. Calibrate. Step-by-step instructions to determine and cause corrections to be made or to be adjusted on instruments of test, measuring, and diagnostic equipment used in precision measurement. It consists of comparisons of two instruments, one of which is a certified standard of known accuracy, to detect and adjust any discrepancy in the accuracy of the instrument being compared.
7. Remove. Step-by-step instructions for taking a component off an asset to facilitate other maintenance on a different component or on the same component (except for replace and repair.) For software, it is step-by-step instructions for uninstalling/removing the software from a workstation or other viewing hardware.
8. Install. Step-by-step instructions for placing, positioning, or otherwise locating a component to make it part of a higher level end item. The install task is authorized by the LPD/MAC and the assigned maintenance level is shown as the third position code of the SMR code. For software, it is step-by-step instructions putting the software on a workstation or other viewing hardware.
9. Replace. Step-by-step instructions for taking off an unserviceable component and putting a serviceable component in its place. The replace task is authorized by the LPD/MAC and the assigned maintenance level is shown as the third position code of the SMR code.

Source: https://assist.dla.mil -- Downloaded: 2016-12-09T23:24Z
Check the source to verify that this is the current version before use.

10. Repair. Step-by-step instructions for restoring an item or software to a completely serviceable or fully mission capable status. The repair task is authorized by the LPD/MAC and the assigned maintenance level is shown as the fourth position code of the SMR code. The following definitions are applicable to the "repair" maintenance task: welding, grinding, riveting, straightening, facing, machining, and/or resurfacing.
11. Paint. Step-by-step instructions to prepare and apply coats of paint. When used with munitions, the paint is applied so the ammunition can be identified and protected.
12. Overhaul. Step-by-step instructions to restore an item to a completely serviceable/operational condition as required by maintenance standards in the appropriate technical publications. Overhaul is normally the highest degree of maintenance performed by the Army. Overhaul does not normally return an item to a like new condition.
13. Rebuild. Step-by-step instructions required for the restoration of unserviceable equipment to a like new condition in accordance with original manufacturing standards. Rebuild is the highest degree of materiel maintenance applied to Army equipment. The rebuild operation includes the act of returning to zero those age measurements (e.g., hours/miles) considered in classifying Army equipment/components.
14. Lubricate. Step-by-step instructions for applying a material (e.g., oil or grease) to reduce friction and allow a component to operate in a more efficient manner.
15. Mark. Step-by-step instructions for restoring obliterated identification on an asset.
16. Pack. Step-by-step instructions to place an item into a container for either storage or shipment after service and other maintenance operations have been completed.
17. Unpack. Step-by-step instructions for removing an asset from a storage or shipping container in preparation to perform further maintenance (e.g., repair or install).
18. Preserve. Step-by-step instructions for treating systems and equipment whether installed or stored, to ensure a serviceable condition.
19. Prepare for use. Step-by-step instructions required to make an asset ready for other maintenance (e.g., remove preservatives, lubricate, etc.).
20. Assemble. Step-by-step instructions to join the component pieces of an asset together to make a complete serviceable asset.
21. Disassemble. Step-by-step instructions to break down (take apart) a spare/functional group coded item to the level of its least component, that is assigned an SMR code for the level of maintenance under consideration (i.e., identified as maintenance significant).

Source: https://assist.dla.mil -- Downloaded: 2016-12-09T23:24Z
Check the source to verify that this is the current version before use.

22. Clean. Step-by-step instructions on how to remove dirt, corrosion or other contaminants from equipment. Refer to appropriate painting, lubrication, and preservation methods to restore original corrosion prevention and control methods when removed as a result of cleaning and/or when using cleaning to remove corrosion from the item.
23. Nondestructive inspection. Step-by-step instructions on preparation and accomplishment inspections which do not destroy or damage the equipment.
24. Radio interference suppression. Step-by-step instructions to ensure installed equipment, either communication or other electronics, does not interfere with installed communication equipment.
25. Place in service. Step-by-step instructions required to place an item into service that are not covered in the service upon receipt work package.
26. Towing. Step-by-step instructions to connect one vehicle to another for the purpose of having one vehicle moved through the motive power of the other vehicle.
27. Jacking. Step-by-step instructions to mechanically raise or lift a vehicle to facilitate maintenance on the vehicle.
28. Parking. Step-by-step instructions to safely place a vehicle in a lot, ramp area or other designated location.
29. Mooring. Step-by-step instructions to secure a vehicle by chains, ropes or other means to protect the vehicle from environmental conditions or secure for transportation.
30. Covering. Step-by-step instructions to place a protective wrapping over a vehicle to protect it from environmental conditions or to hide (e.g., camouflage) it.
31. Hoisting. Step-by-step instructions to allow a vehicle to be raised by cables or ropes through attaching points.
32. Sling loading. Step-by-step instructions to place a sling around a vehicle to allow it to be raised.
33. External power. Step-by-step instructions on how to apply electrical power from any authorized power source (e.g., external generator or facility power).
34. Preparation for storage. Step-by-step instructions for preparing the equipment for placement into administrative, short term, and/or long-term storage.
35. Preparation for shipment. Step-by-step instructions for preparing the equipment to be shipped or transported.
36. Transport. Step-by-step instructions and guidance for transporting/shipping the equipment.

Source: https://assist.dla.mil -- Downloaded: 2016-12-09T23:24Z
Check the source to verify that this is the current version before use.

37. Arm. Step-by-step instructions on activating munitions prior to use.

38. Load. Step-by-step instructions for one of three tasks:

    a. For transportation, the act of placing assets onto a transportation medium (e.g., pallet, truck, container).

    b. For weapons/weapons systems, the act of placing munitions into the weapon/weapons system.

39. Unload. Step-by-step instructions for one of three tasks:

    a. For transportation, the act of removing assets from a transportation medium (e.g., pallet, truck, container).

    b. For weapons/weapons systems, the act of removing munitions from the weapon/weapons system.

40. Install peripheral device. Step-by-step instructions for installing peripheral devices such as printers, scanners, modems, etc.

41. Uninstall peripheral device. Step-by-step instructions for uninstalling peripheral devices such as printers, scanners, modems, etc.

42. Upgrade/patch. Step-by-step instructions for performing an upgrade to software or installing a patch to software.

43. Configure. Step-by-step instructions for configuring software for different uses/purposes and/or different users.

44. Debug. Step-by-step instructions for debugging software/correcting errors in the software.

Explanation of Columns in the MAC

Column (1) Group Number. Column (1) lists Functional Group Code (FGC) numbers, the purpose of which is to identify maintenance significant components, assemblies, subassemblies, and modules with the Next Higher Assembly (NHA).

Column (2) Component/Assembly. Column (2) contains the item names of components, assemblies, subassemblies, and modules for which maintenance is authorized.

Column (3) Maintenance Function. Column (3) lists the functions to be performed on the item listed in column (2). (For a detailed explanation of these functions, refer to maintenance functions (tasks) outlined previously.)

Column (4) Maintenance Level. Column (4) specifies each level/class of maintenance authorized to perform each function listed in column (3), by indicating man-hours required in the appropriate sub-column. The man-hour figure is the task time multiplied by the number of maintainers required to perform that maintenance task. This time includes preparation (equipment conditions, inspections), task performance, follow-on maintenance and quality assurance (inspections) time. Crew maintenance time will be entered as task (clock) time only. If different maintenance classes perform the same maintenance functions due to the number or complexity of the tasks, appropriate man-

Source: https://assist.dla.mil -- Downloaded: 2016-12-09T23:24Z
Check the source to verify that this is the current version before use.

hour figures are to be shown for each class. The symbol designations for the various maintenance levels and classes are as follows:

Field:

C Crew maintenance

F Maintainer maintenance

Sustainment:

L Specialized Repair Activity (SRA)

H Below depot maintenance

D Depot maintenance

NOTE

The "L" maintenance class is not included in column (4) of the MAC. Functions to this class of maintenance are identified by work time figure in the "H" column of column (4), and an associated reference code is used in the REMARKS column (6). This code is keyed to the remarks and the SRA complete repair application is explained there.

Column (5) Tools and Equipment Reference Code. Column (5) specifies, by a number code, those common tool sets, kits, or outfits (not individual tools), common Test, Measurement and Diagnostic Equipment (TMDE), common tools that are not part of a set, kit, or outfit, special tools, special TMDE, and special support equipment required to perform the designated function. Codes are keyed to the entries in the tools and test equipment table.

Column (6) Remarks Code. When applicable, this Column (6) contains a letter code, in alphabetical order, which is keyed to the remarks table entries.

Explanation of Columns in the Tools and Test Equipment Requirements

Column (1) Tool or Test Equipment Reference Code. The tool or test equipment reference code correlates with a code used in column (5) of the MAC.

Column (2) Maintenance Level. The lowest class of maintenance authorized to use the tool or test equipment.

Column (3) Nomenclature. Name or identification of the tool or test equipment.

Column (4) National Stock Number (NSN). The NSN of the tool or test equipment.

Column (5) Tool Number. The manufacturer's part number.

Explanation of Columns in the Remarks

Column (1) Remarks Code. The code recorded in column (6) of the MAC.

Column (2) Remarks. This column lists information pertinent to the maintenance task being performed as indicated in the MAC."

G.5.3.2 Introduction for aviation Maintenance Allocation Chart (MAC) work package **<macintrowp>**.

G.5.3.2.1 Work package identification information **<wpidinfo>**. This information is required for this work package. (Refer to 4.7.9.3)

Source: https://assist.dla.mil -- Downloaded: 2016-12-09T23:24Z
Check the source to verify that this is the current version before use.

G.5.3.2.2 Work package initial setup **<initial_setup>**. Initial setup is not required for this work package.

G.5.3.2.3 Introduction **<intro>**. The following text shall be prepared and included verbatim. (Refer to FIGURE G-3.)

"INTRODUCTION

Aviation Maintenance Allocation Chart

The MAC (immediately following the introduction) designates overall authority and responsibility for the performance of maintenance tasks on the identified end item or component. The application of the maintenance tasks to the end item or component shall be consistent with the capacities and capabilities of the designated maintenance level which are shown on the MAC as:

Field - includes two columns:

"O" which corresponds to Aviation Maintenance Company (AMC) and

"F" which corresponds to Aviation Support Battalion (ASB)

Sustainment - includes two columns:

"L" which corresponds to Theater Aviation Sustainment Maintenance Group (TASMG) and other organizations that have National Maintenance Program certification and

"D" which corresponds to Depot

The maintenance to be performed is described as follows:

1. Field maintenance activities:
   (1) Aviation Maintenance Company (AMC). The aviation maintenance company is the lowest class of aviation field maintenance. The AMC provides direct support to aircraft operations, performing functions of aircraft servicing (daily, preflight, post-flight inspections, refuel, arming), Battle Damage Assessment and Repair (BDAR), and repair or replacement actions as specified in the MAC.
   (2) Aviation Support Company (ASC) in the Aviation Support Battalion (ASB). The ASB performs the following types of maintenance:
      (1) Off equipment repair of LRUs or other components within the limits prescribed in the MAC.
      (2) Inspections beyond the capability of the AMC.
      (3) BDAR as required.
      (4) Provide support to AMC personnel during peak workload periods as determined by local policy.
2. Sustainment maintenance:
   a. Theater Aviation Sustainment Maintenance Group (TASMG) (deployed). The TASMG performs the following:
      (1) Provides support to CONUS deploying forces.
      (2) Provides support to OCONUS deployed forces (as the Theater Aviation Support Maintenance Group (TASMG).
      (3) Expands aviation maintenance capabilities of CONUS depots.

Source: https://assist.dla.mil -- Downloaded: 2016-12-09T23:24Z
Check the source to verify that this is the current version before use.

(4) Classifies and inspects aviation stocks and components.

(5) Performs maintenance actions beyond the scope of the AMC or ASB within the limits prescribed in the MAC.

(6) Augments ASB and AMC maintenance tasks.

b. Depot. This is maintenance accomplished on a component, accessory, assembly, subassembly, plug-in unit, or other portion either on the system or after it is removed. Assets to be repaired at this class are normally returned to an Army Depot or authorized contractor facility. The replace function for this class of maintenance is indicated by the letter "D" or "K" appearing in the third position of the Source, Maintenance, and Recoverability (SMR) code. A "D" or "K" appearing in the fourth position of the SMR code indicates complete repair is possible at the depot sustainment maintenance level. Items are returned to the supply system after maintenance is performed at this level/class.

Use of the MAC

NOTE

Approved item names are used throughout this MAC. Generic terms/ nomenclature (if any) are expressed in parentheses and are not to be considered as official terminology.

The MAC assigns maintenance tasks to the lowest level/class of maintenance.

Maintenance functions (tasks)

Maintenance functions are limited to and defined as follows *(Functions/tasks may be removed from introduction if not used)*:

1. Inspect. Step-by-step instructions to determine the serviceability of an item by comparing its physical, mechanical, and/or electrical characteristics with established standards through examination (e.g., by sight, sound, or feel).
2. Test. Step-by-step instructions to verify serviceability by measuring the mechanical, pneumatic, hydraulic, or electrical characteristics of an item and comparing those characteristics with prescribed standards, e.g., load testing of lift devices or hydrostatic testing of pressure hoses. For software, to verify usability/operability/functionality of the software.
3. Service. Step-by-step instructions to be performed periodically to keep an item in proper operating condition such as replenishing fuel, lubricants, chemical fluids, or gases.
4. Adjust. Step-by-step instructions to maintain or regulate, within prescribed limits, by bringing into proper position, or by setting the operating characteristics to specified parameters.
5. Align. Step-by-step instructions to adjust specified variable elements of an item to bring about optimum or desired performance.
6. Calibrate. Step-by-step instructions to determine and cause corrections to be made or to be adjusted on instruments of test, measuring, and diagnostic equipment used in precision measurement. It consists of comparisons of two instruments, one of which

Source: https://assist.dla.mil -- Downloaded: 2016-12-09T23:24Z
Check the source to verify that this is the current version before use.

is a certified standard of known accuracy, to detect and adjust any discrepancy in the accuracy of the instrument being compared.

7. Remove. Step-by-step instructions for taking a component off an asset to facilitate other maintenance on a different component or on the same component (except for replace and repair.) For software, it is step-by-step instructions for uninstalling/removing the software from a workstation or other viewing hardware.
8. Install. Step-by-step instructions for placing, positioning, or otherwise locating a component to make it part of a higher level end item. The install task is authorized by the LPD/MAC and the assigned maintenance level is shown as the third position code of the SMR code. For software, it is step-by-step instructions putting the software on a workstation or other viewing hardware.
9. Replace. Step-by-step instructions for taking off an unserviceable component and putting a serviceable component in its place. The replace task is authorized by the LPD/MAC and the assigned maintenance level is shown as the fourth position code of the SMR code.
10. Repair. Step-by-step instructions for restoring an item or software to a completely serviceable or fully mission capable status. The repair task is authorized by the LPD/MAC and the assigned maintenance level is shown as the fourth position code of the SMR code. The following definitions are applicable to the “repair” maintenance task: welding, grinding, riveting, straightening, facing, machining, and/or resurfacing.
11. Paint. Step-by-step instructions to prepare and apply coats of paint. When used with munitions, the paint is applied so the ammunition can be identified and protected.
12. Overhaul. Step-by-step instructions to restore an item to a completely serviceable/operational condition as required by maintenance standards in the appropriate technical publications. Overhaul is normally the highest degree of maintenance performed by the Army. Overhaul does not normally return an item to a like new condition.
13. Rebuild. Step-by-step instructions required for the restoration of unserviceable equipment to a like new condition in accordance with original manufacturing standards. Rebuild is the highest degree of materiel maintenance applied to Army equipment. The rebuild operation includes the act of returning to zero those age measurements (e.g., hours/miles) considered in classifying Army equipment/components.
14. Lubricate. Step-by-step instructions for applying a material (e.g., oil or grease) to reduce friction and allow a component to operate in a more efficient manner.
15. Mark. Step-by-step instructions for restoring obliterated identification on an asset.
16. Pack. Step-by-step instructions to place an item into a container for either storage or shipment after service and other maintenance operations have been completed.

Source: https://assist.dla.mil -- Downloaded: 2016-12-09T23:24Z
Check the source to verify that this is the current version before use.

17. Unpack. Step-by-step instructions for removing an asset from a storage or shipping container in preparation to perform further maintenance (e.g., repair or install).
18. Preserve. Step-by-step instructions for treating systems and equipment whether installed or stored, to ensure a serviceable condition.
19. Prepare for use. Step-by-step instructions required to make an asset ready for other maintenance (e.g., remove preservatives, lubricate, etc.)
20. Assemble. Step-by-step instructions to join the component pieces of an asset together to make a complete serviceable asset.
21. Disassemble. Step-by-step instructions to break down (take apart) a spare/functional group coded item to the level of its least component, that is assigned an SMR code for the level of maintenance under consideration (i.e., identified as maintenance significant)
22. Clean. Step-by-step instructions on how to remove dirt, corrosion or other contaminants from equipment. Refer to appropriate painting, lubrication, and preservation methods to restore original corrosion prevention and control methods when removed as a result of cleaning and/or when using cleaning to remove corrosion from the item.
23. Nondestructive inspection. Step-by-step instructions on preparation and accomplishment of inspections which do not destroy or damage the equipment.
24. Radio interference suppression. Step-by-step instructions to ensure installed equipment, either communication or other electronics, does not interfere with installed communication equipment.
25. Place in service. Step-by-step instructions required to place an item into service that are not covered in the service upon receipt work package.
26. Towing. The step-by-step instructions to connect one vehicle to another for the purpose of having one vehicle moved through the motive power of the other vehicle.
27. Jacking. The step-by-step instructions to mechanically raise or lift a vehicle to facilitate maintenance on the vehicle.
28. Parking. Step-by-step instructions to safely place a vehicle in a lot, ramp area or other designated location.
29. Mooring. Step-by-step instructions to secure a vehicle by chains, ropes or other means to protect the vehicle from environmental conditions or secure for transportation.
30. Covering. Step-by-step instructions to place a protective wrapping over a vehicle to protect it from environmental conditions or to hide (e.g., camouflage) it.
31. Hoisting. Step-by-step instructions to allow a vehicle to be raised by cables or ropes through attaching points.

Source: https://assist.dla.mil -- Downloaded: 2016-12-09T23:24Z
Check the source to verify that this is the current version before use.

32. Sling loading. Step-by-step instructions to place a sling around a vehicle to allow it to be raised.

33. External power. Step-by-step instructions on how to apply electrical power from any authorized power source (e.g., external generator or facility power).

34. Preparation for storage. Step-by-step instructions for preparing the equipment for placement into administrative, short term, and/or long-term storage.

35. Preparation for shipment. Step-by-step instructions for preparing the equipment to be shipped or transported.

36. Transport. Step-by-step instructions and guidance for transporting/shipping the equipment.

37. Arm. Step-by-step instructions on activating munitions prior to use.

38. Load. Step-by-step instructions for one of three tasks:

    a. For transportation, the act of placing assets onto a transportation medium (e.g., pallet, truck, container).

    b. For weapons/weapon systems, the act of placing munitions into the weapon/weapon system.

39. Unload. Step-by-step instructions for one of three tasks:

    a. For transportation, the act of removing assets from a transportation medium (e.g., pallet, truck, container).

    b. For weapons/weapon systems, the act of removing munitions from the weapon/weapon system.

40. Install peripheral device. Step-by-step instructions for installing peripheral devices such as printers, scanners, modems, etc.

41. Uninstall peripheral device. Step-by-step instructions for uninstalling peripheral devices such as printers, scanners, modems, etc.

42. Upgrade/patch. Step-by-step instructions for performing an upgrade to software or installing a patch to software.

43. Configure. Step-by-step instructions for configuring software for different uses/purposes and/or different users.

44. Debug. Step-by-step instructions for debugging software/correcting errors in the software).

Explanation of Columns in the MAC

Column (1) Group Number. Column (1) lists Functional Group Code (FGC) numbers, the purpose of which is to identify maintenance significant components, assemblies, subassemblies, and modules with the Next Higher Assembly (NHA).

Source: https://assist.dla.mil -- Downloaded: 2016-12-09T23:24Z
Check the source to verify that this is the current version before use.

Column (2) Component/Assembly. Column (2) contains the item names of components, assemblies, subassemblies, and modules for which maintenance is authorized.

Column (3) Maintenance Function. Column (3) lists the functions to be performed on the item listed in column (2). (For a detailed explanation of these functions, refer to maintenance functions (tasks) outlined above.)

Column (4) Maintenance Level. Column (4) specifies each level/class of maintenance authorized to perform each function listed in column (3), by indicating man-hours required in the appropriate sub-column. The man-hour figure is the task time multiplied by the number of maintainers required to perform that maintenance task. This time includes preparation (equipment conditions, inspections), task performance, follow-on maintenance and quality assurance (inspections) time. Crew maintenance time will be entered as task (clock) time only. If different maintenance classes perform the same maintenance functions due to the number or complexity of the tasks, appropriate man-hour figures are to be shown for each class. The symbol designations for the various maintenance levels and classes are as follows:

Field:

O Aviation Maintenance Company

F Aviation Support Battalion

Sustainment:

L Theater Aviation Support Maintenance Group

D Depot

Column (5) Tools and Equipment Reference Code. Column (5) specifies, by a number code, those common tool sets, kits, or outfits (not individual tools), common Test, Measurement and Diagnostic Equipment (TMDE), common tools that are not part of a set, kit, or outfit, and special tools, special TMDE, and special support equipment required to perform the designated function.

Column (6) Remarks Code. When applicable, Column (6) contains a letter code, in alphabetical order, which is keyed to the remarks.

Explanation of Entries in the Tools and Test Equipment Requirements

Column (1) Tool or Test Equipment Reference Code. The tool or test equipment reference code correlates with a code used in column (5) of the MAC.

Column (2) Maintenance Level. The lowest level/class of maintenance authorized to use the tool or test equipment.

Column (3) Nomenclature. Name or identification of the tool or test equipment.

Column (4) National Stock Number (NSN). The NSN of the tool or test equipment.

Column (5) Tool Number. The manufacturer's part number.

Explanation of Entries in the Remarks

Column (1) Remarks Code. The code recorded in remarks code column of the MAC.

Source: https://assist.dla.mil -- Downloaded: 2016-12-09T23:24Z
Check the source to verify that this is the current version before use.

Column (2) Remarks. This column lists information pertinent to the maintenance task being performed as indicated in the MAC."

G.5.3.3 Maintenance Allocation Chart (MAC) work package **<macwp>**. This work package shall be prepared in Functional Group Code (FGC) or top-down breakdown sequence to consolidate and identify those groups on the list that involve identified maintenance tasks. The MAC shall be prepared according to the approved source data provided by the acquiring activity. Every entry in the MAC shall be contained in a maintenance task within the maintenance publications (TM, NMWR, DMWR, SUM, SAM, etc.) for the system. The associated maintenance work package may be in a higher level or lower level publication than the MAC is in. The MAC shall be in the 23 level maintenance manual or for combined manuals the one containing the 23 level information (e.g., 13, 14, or 24). The MAC shall contain entries for all levels of maintenance through depot for both hardware and software maintenance tasks. The time to complete a task includes the time required for setup, follow-on maintenance procedures, and general maintenance procedures required for the task (e.g., a repair task that requires follow-on maintenance would include the time for the follow-on maintenance in the time for the repair.).

G.5.3.3.1 Work package identification information **<wpidinfo>**. Work package identification information is required for this work package. (Refer to 4.7.9.3.)

G.5.3.3.2 Work package initial setup **<initial_setup>**. Initial setup is not required for this work package.

G.5.3.3.3 Maintenance Allocation Chart (MAC) entries.

a. The basic entries in the MAC shall be a list of functional groups applicable to the end item which requires maintenance. The term functional group applies to reparable assemblies and subassemblies; e.g., spares, but not to repair parts. The end item group shall be numbered “00,” or its equivalent “AA.” The functional group codes shall not exceed 11 characters in length and shall match those used in the RPSTL.

b. All item names of MAC functional groups shall be the official nomenclature. (Refer to 4.7.25.2.) Reverse word order shall be used in the MAC. Where applicable, type designators may be used, without stock or part numbers (P/Ns) if possible, in order to minimize need for subsequent change; however, entries shall contain positive identification. Parts that are not subject to maintenance shall not be listed in the MAC.

c. The maintenance code entered in the third position of the SMR code in the RPSTL shall be used to identify the lowest category of maintenance that is authorized to remove, replace, and use the spare or repair part. SMR codes are further defined in APPENDIX F.

d. All items in the MAC shall specify the maintenance class(es) to which a function is authorized.

e. Exception is authorized to ammunition MACs to permit use of maintenance task headings that better describe or identify ammunition peculiar maintenance tasks. The headings used and their definitions shall be included in the appropriate ammunition TM(s).

f. The MAC shall be updated during change/revision cycle to reflect any changes made to maintenance tasks in that change/revision such as adding new tasks, deleting tasks, or changing times.

Source: https://assist.dla.mil -- Downloaded: 2016-12-09T23:24Z
Check the source to verify that this is the current version before use.

G.5.3.3.4 Maintenance Allocation Chart (MAC) format. The non-aviation MAC **<mac> (standard information per paragraph 4.7.13.7)** and aviation MAC **<avmac> (standard information per paragraph 4.7.13.7)** shall be prepared in the formats shown in FIGURE G-4 (non-aviation), FIGURE G-5 (joint service non-aviation), and FIGURE G-6 (aviation) and as follows:

a. For an explanation of data to be listed in columns of the MAC, refer to the introduction information presented in G.5.3.1 or G.5.3.2 as applicable.

b. The group number **<groupno>** shall be entered in column 1, the nomenclature of the spare (component/assembly) **<compassem>** shall be entered in column 2, and the maintenance task **<maintfunc>** shall be listed in column 3 of the MAC.

c. The maintenance level entry shall be as follows:

(1) Column 4 of the non-aviation MAC shall be divided into two main headings, one for field and one for sustainment. Beneath the main headings, there shall be four subheadings **<maintclass-2lvl>**. Crew **<c>** and maintainer **<f>** shall be under field and below depot **<h>** and depot **<d>** shall be under sustainment. For joint service manuals, an asterisk shall be placed next to the “C” and the following note shall follow the table to explain the asterisk:

“*NOTE

This is a joint service manual. While Army uses a “C,” other services may use an “O” in this column.”

(2) Column 4 of the aviation MAC shall be divided into two main headings, one for field and one for sustainment. Beneath the main headings, there shall be four subheadings **<avmaintclass-2lvl>**. Aviation maintenance company <**o**> and aviation support battalion **<f>** shall be under field and theater aviation sustainment maintenance group **<l>** and depot **<d>** shall be under sustainment.

d. A man-hour figure must appear in the subcolumn for the maintenance level authorized to perform the maintenance listed in column 3. For ammunition, an "X" may be used in place of man-hour figure.

e. Reference numbers for all required tools and test equipment **<terefs>** shall be listed in column 5 of the MAC. These reference numbers shall correspond to the appropriate tools/test equipment listed in the tools and test equipment table.

f. Reference letters for applicable remarks **<remarkrefs>** shall be listed in column 6 of the MAC. These reference letters shall correspond to the appropriate remarks listed in the remarks table.

Source: https://assist.dla.mil -- Downloaded: 2016-12-09T23:24Z
Check the source to verify that this is the current version before use.

G.5.3.4 Tools and test equipment requirements **<tereqtab>**. A tabular list **(standard information per paragraph 4.7.13.7)** of all common tool sets, kits, or outfits (not individual tools), common Test, Measurement and Diagnostic Equipment (TMDE), common tools that are not part of a set, kit, or outfit, and special tools, special TMDE, and special support equipment required to maintain the equipment shall be prepared in accordance with the format shown in FIGURE G-7 or FIGURE G-8, as applicable. Common tools shall not be included on this list when they are part of an existing set, kit, or outfit authorized to the intended user; however, the authorized set, kit, or outfit that contains the prescribed common tools shall be listed.

G.5.3.5 Remarks **<remarktab>**. Remarks **(standard information per paragraph 4.7.13.7)** pertinent to maintenance tasks shall be prepared as applicable and shall be listed in this table alphabetically by remarks code. Remarks table format shall be as shown in FIGURE G-7 or FIGURE G-8, as applicable.

G.5.4 Components of End Item (COEI)/Basic Issue Items (BII) or Supply System Responsibility (SSR) lists work package (**crew (operator) only**) **<coeibiiwp>**. Army only manuals and multi-service manuals shall use term COEI/BII. For Marine Corps only manuals, use the term "Supply System Responsibility (SSR)" in place of COEI/BII for this work package. This work package shall be prepared as an inventory for the equipment to ensure safe and efficient operation. The format of the COEI and BII shall be based on the number of items and usability. When only a few items are listed, the illustrations shall be placed above the tabular listing (Method A). When using method A for a larger number of items, the table may be broken into several smaller tables for usability. When numerous items are listed, the illustrations may be included within the tabular listing for better usability (Method B). The data described in G.5.4.1 through G.5.4.5 shall be prepared. For multiservice manuals involving the Marine Corps, the terms COEI and BII shall be used regardless of the lead service.

G.5.4.1 Work package identification information **<wpidinfo>**. Work package identification information is required for this work package. (Refer to 4.7.9.3.)

G.5.4.2 Work package initial setup **<initial_setup>**. Initial setup is not required for this work package.

G.5.4.3 Introductions for COEI/BII lists and SSR lists work package **<intro>**. As applicable, the following introductions shall be prepared and included verbatim.

G.5.4.3.1 (A) Introduction for COEI/BII. Include the following introduction verbatim (refer to FIGURE G-9 for example). If the COEI/BII list is long and there are multiple UOCs, additional information may be provided in the UOC portion of the introduction.

"COMPONENTS OF END ITEM (COEI) AND BASIC ISSUE ITEMS (BII) LISTS INTRODUCTION

Scope

This work package lists COEI and BII for the (*insert the end item name*) to help you inventory items for safe and efficient operation of the equipment.

Source: https://assist.dla.mil -- Downloaded: 2016-12-09T23:24Z
Check the source to verify that this is the current version before use.

General

The COEI and BII information is divided into the following lists:

Components of End Item (COEI). This list is for information purposes only and is not authority to requisition replacements. These items are part of the (*enter name of end item*). As part of the end item, these items must be with the end item whenever it is issued or transferred between property accounts. Items of COEI are removed and separately packaged for transportation or shipment only when necessary. Illustrations are furnished to help you find and identify the items.

Basic Issue Items (BII). These essential items are required to place the (*enter name of end item*) in operation, operate it, and to do emergency repairs. Although shipped separately packaged, BII must be with the (*enter name of end item*) during operation and when it is transferred between property accounts. Listing these items is your authority to request/requisition them for replacement based on authorization of the end item by the Table of Organization and Equipment/Modified Table of Organization and Equipment (TOE/MTOE). Illustrations are furnished to help you find and identify the items.

Explanation of Columns in the COEI List and BII List

Select method A text.

"Column (1) Illus Number. Gives you the number of the item illustrated.

Column (2) National Stock Number (NSN). Identifies the stock number of the item to be used for requisitioning purposes.

Column (3) Description, Part Number/Commercial and Government Entity Code (CAGEC). Identifies the Federal item name (in all capital letters) followed by a minimum description when needed. When applicable, the stowage location of COEI and BII is also included in this column. The last line below the description is the CAGEC (in parentheses) and the part number.

Column (4) Usable On Code. When applicable, gives you a code if the item you need is not the same for different models of equipment. (*Add the following only as applicable. Replace As, Bs, or Cs with appropriate codes and model numbers.*) These codes are identified below:

Code	**Used on**
AAA	*Model XXX*
BBB	*Model XXXX*
CCC	*Model XXXXX*

Add if applicable: Model XXX uses COEI items (insert item numbers) and BII items (insert item numbers), Model XXXX use COEI items(insert item numbers) and BII items (insert item numbers), and Model XXXXX use COEI items(insert item numbers) and BII items (insert item numbers).

Column (5) U/I. Unit of Issue (U/I) indicates the physical measurement or count of the item as issued per the National Stock Number shown in column (2).

Column (6) Qty Rqr. Indicates the quantity required."

OR

Source: https://assist.dla.mil -- Downloaded: 2016-12-09T23:24Z
Check the source to verify that this is the current version before use.

Select method B text.

"Column (1) Item Number. Gives you the reference number of the item listed.

Column (2) National Stock Number (NSN) and Illustration. Identifies the stock number of the item to be used for requisitioning purposes and provides an illustration of the item.

Column (3) Description, Part Number/(CAGEC). Identifies the Federal item name (in all capital letters) followed by a minimum description when needed. When applicable, the stowage location of COEI and BII is also included in this column. The last line below the description is the CAGEC (Commercial and Government Entity Code) (in parentheses) and the part number.

Column (4) Usable On Code. When applicable, gives you a code if the item you need is not the same for different models of equipment. (*Add the following only as applicable. Replace As, Bs, or Cs with appropriate codes and model numbers.*) These codes are identified below:

Code	**Used on**
AAA	*Model XXX*
BBB	*Model XXXX*
CCC	*Model XXXXX*

Add if applicable: Model XXX uses COEI items (insert item numbers) and BII items (insert item numbers), Model XXXX use COEI items(insert item numbers) and BII items (insert item numbers), and Model XXXXX use COEI items(insert item numbers) and BII items (insert item numbers).

Column (5) U/I. Unit of Issue (U/I) indicates the physical measurement or count of the item as issued per the National Stock Number shown in column (2).

Column (6) Qty Rqr. Indicates the quantity required."

G.5.4.3.2 (MC) Introduction for SSR. Include the following introduction verbatim for SSR. If the SSR list is long and there are multiple UOCs, additional information may be provided in the UOC portion of the introduction

"SUPPLY SYSTEM RESPONSIBILITY (SSR) LIST

INTRODUCTION

Scope

This work package lists SSR for the (*insert the end item name*) to help you inventory items for safe and efficient operation of the equipment.

General

Supply System Responsibility. This list is for information purposes only and is not authority to requisition replacements. These items are part of the (*enter name of end item*). As part of the end item, these items must be with the end item whenever it is issued or transferred between property accounts. Illustrations are furnished to help you find and identify the items.

Source: https://assist.dla.mil -- Downloaded: 2016-12-09T23:24Z
Check the source to verify that this is the current version before use.

Explanation of Entries in the SSR List

Select method A text

Illus Number. Gives you the number of the item illustrated.

National Stock Number (NSN). Identifies the stock number of the item to be used for requisitioning purposes.

Description, Part Number/Commercial and Government Entity Code (CAGEC). Identifies the Federal item name (in all capital letters) followed by a minimum description when needed. The stowage location of SSR is also included in this entry. The last line below the description is the CAGEC (in parentheses) and the part number.

Usable On Code. When applicable, gives you a code if the item you need is not the same for different models of equipment. (*Add the following only as applicable. Replace As, Bs, or Cs with appropriate codes and model numbers.*) These codes are identified below:

Code	**Used on**
AAA	*Model XXX*
BBB	*Model XXXX*
CCC	*Model XXXXX*

Add if applicable: Model XXX uses SSR items (insert items numbers), Model XXXX uses SSR items (insert item numbers), and Model XXXXX uses SSR items (insert item numbers).

U/I. Unit of Issue (U/I) indicates the physical measurement or count of the item as issued per the National Stock Number entry.

Qty Rqr. Indicates the quantity required."

OR

Select method B text.

"Item Number. Gives you the reference number of the item listed.

National Stock Number and Illustration. Identifies the stock number of the item to be used for requisitioning purposes and provides an illustration of the item.

Description, Part Number/ Commercial and Government Entity Code (CAGEC). Identifies the Federal item name (in all capital letters) followed by a minimum description when needed. The stowage location of SSR is also included in this entry. The last line below the description is the CAGEC (in parentheses) and the part number.

Usable On Code. When applicable, gives you a code if the item you need is not the same for different models of equipment. (*Add the following only as applicable. Replace As, Bs, or Cs with appropriate codes and model numbers.*) These codes are identified below:

Code	**Used on**
AAA	*Model XXX*
BBB	*Model XXXX*
CCC	*Model XXXXX*

Source: https://assist.dla.mil -- Downloaded: 2016-12-09T23:24Z
Check the source to verify that this is the current version before use.

Add if applicable: Model XXX uses SSR items (insert items numbers), Model XXXX uses SSR items (insert item numbers), and Model XXXXX uses SSR items (insert item numbers.

U/I. Unit of Issue (U/I) indicates the physical measurement or count of the item as issued per the National Stock Number entry.

Qty Rqr. Indicates the quantity required."

G.5.4.4 COEI/SSR list **<coei>**. This list shall be prepared as an illustrated tabular list of COEI/SSR items. The illustrations shall be placed above the list (Method A) or within the list (Method B). The arrangement of the illustrations and list shall be as shown shown in FIGURE G-10 and G-11 (Method A) or FIGURE G-12 (Method B). For method B, illustrations shall be placed in the national stock number column.

G.5.4.4.1 List **<coeitab>**. The COEI/SSR list **(standard information per paragraph 4.7.13.7)** shall include the headings and basic content shown in FIGURE G-10 or FIGURE G-11 or FIGURE G-12, applicable to the specific equipment. The description **<dcpno>** of each item shall consist of the approved Federal item name **<name>**, followed by a short description **<desc>** when needed. The part number **<partno>** shall be located below the item. The CAGEC **<cageno>** shall follow the part number and in parentheses. Items shall be listed in alphabetical order by description. When applicable, the stowage location of COEI/SSR shall also be included with the description in the table. When more than one model or configuration is applicable and Usable On Codes (UOCs) **<uoc>** are assigned, the UOC shall appear in a separate column adjacent to the description column. (Refer to FIGURE G-10, FIGURE G-11 or FIGURE G-12.) When on-board spares **<on-board-spares>** apply, there shall be a break in the text of the list and a new heading ON-BOARD SPARES shall be used. A list of the on-board spares shall appear in the same format as required for the basic COEI/SSR list.

G.5.4.5 (A) Basic Issue Items (BII) list **<bii>**. This tabular list **(standard information per paragraph 4.7.13.7)** shall be prepared in the same format and include similar content (tailored to the applicable BII) as required for the COEI list. Items shall be listed in alphabetical order by description . When applicable, the stowage location of BII shall also be included in the description column in the table. (Refer to FIGURE G-13 or FIGURE G-14.) Equipment publications for operators shall be listed in the basic issue items list." Any tools required for operator maintenance shall be included in the BII.

G.5.5 Additional Authorization List (AAL) or Using Unit Responsibility Items (UURI) list work package (**crew (operator) only**) **<aalwp>**. Army only manuals and multi-service manuals shall user the term AAL. For Marine Corps only manuals, the term "Using Unit Responsibility Items (UURI)" shall be used in place of AAL. This work package shall be prepared as directed by acquiring activity and shall list all AAL items (i.e., items not issued with the end item; not listed on the end item engineering drawing as part of the end item, NSN configuration; not required to be turned in with the end item; separately authorized by MTOE, TDA, CTA, or JTA; and provided for information only). For Marine Corps only manuals, this work package shall list the items to be requisitioned separately by using unit. The data described in G.5.5.1 and G.5.5.4 shall be prepared. For multiservice manuals involving the Marine Corps, the term AAL shall be used regardless of the lead service.

Source: https://assist.dla.mil -- Downloaded: 2016-12-09T23:24Z
Check the source to verify that this is the current version before use.

G.5.5.1 Work package identification information **<wpidinfo>**. Work package identification information is required for this work package. (Refer to 4.7.9.3.)

G.5.5.2 Work package initial setup **<initial_setup>**. Initial setup is not required for this work package.

G.5.5.3 AAL/UURI introductions **<intro>**. As applicable, the following introductions (text within the quotation marks) shall be prepared and included verbatim. (Refer also to FIGURE G-15.)

G.5.5.3.1 (A) AAL introduction. The following instruction shall be included verbatim. If the AAL list is long and there are multiple UOCs, additional information may be provided in the UOC portion of the introduction

"**ADDITIONAL AUTHORIZATION LIST (AAL)**

INTRODUCTION

Scope

This work package lists additional items you are authorized for the support of the (*enter item name*).

General

This list identifies items that do not have to accompany the (*enter short item name*) and that do not have to be turned in with it. These items are all authorized to you by CTA, MTOE, TDA, or JTA.

Explanation of Columns in the AAL

Column (1) National Stock Number (NSN). Identifies the stock number of the item to be used for requisitioning purposes.

Column (2) Description, Part Number/(CAGEC). Identifies the Federal item name (in all capital letters) followed by a minimum description when needed. The last line below the description is the part number and the Commercial and Government Entity Code (CAGEC) (in parentheses).

Column (3) Usable On Code. When applicable, gives you a code if the item you need is not the same for different models of equipment. (*Add the following only as applicable. Replace Xs with appropriate codes and model numbers.*) These codes are identified below:

Code	Used on
XXX	*Model XXX*
XXX	*Model XXXX*
XXX	*Model XXXXX*

Add if applicable: Model XXX uses AAL items (insert item numbers), Model XXXX use AAL items(insert item numbers, and Model XXXXX use AAL items(insert item numbers)

Column (4) U/I. Unit of Issue (U/I) indicates the physical measurement or count of the item as issued per the National Stock Number shown in column (1).

Column (5) Qty Recm. Indicates the quantity recommended."

Source: https://assist.dla.mil -- Downloaded: 2016-12-09T23:24Z
Check the source to verify that this is the current version before use.

G.5.5.3.2 (MC) UURI introduction. The following introduction shall be included verbatim. If the UURI list is long and there are multiple UOCs, additional information may be provided in the UOC portion of the introduction

"**USING UNIT RESPONSIBILITY ITEMS (UURI) LIST**

INTRODUCTION

Scope

This work package lists using unit responsibility items you are authorized for the support of the (*enter item name*).

General

This list identifies items that are to be requisitioned by the using unit.

Explanation of Entries in the UURI

National Stock Number (NSN). Identifies the stock number of the item to be used for requisitioning purposes.

Description, Part Number/Commercial and Government Entity Code (CAGEC). Identifies the Federal item name (in all capital letters) followed by a minimum description when needed. The last line below the description is the part number and the CAGEC (in parentheses).

Usable On Code. When applicable, gives you a code if the item you need is not the same for different models of equipment. (*Add the following only as applicable. Replace Xs with appropriate codes and model numbers.*) These codes are identified below:

Code	Used on
XXX	*Model XXX*
XXX	*Model XXXX*
XXX	*Model XXXXX*

Add if applicable: Model XXX uses UURI items (insert item numbers), Model XXXX uses UURI items(insert item numbers), and Model XXXXX use UURI items (insert item numbers.

U/I. Unit of Issue (U/I) indicates the physical measurement or count of the item as issued per the National Stock Number.

Qty Recm. Indicates the quantity recommended."

G.5.5.4 AAL/UURI list **<aal>**. A tabular list **(standard information per paragraph 4.7.13.7)** of all AAL items/UURI shall be prepared. The headings and subsequent information for this list shall be the same as the COEI/BII/SSR lists except the ILLUS NUMBER column required for the COEI/BII/SSR lists shall not apply since no illustrations are used, and the QTY column shall be QTY RECM (quantity recommended). The items shall be listed alphabetically. The format and general content of the list shall be prepared as shown in FIGURE G-15. For Army operator manuals, any parts (except for mandatory replacement parts) required for maintenance shall be listed in the AAL.

Source: https://assist.dla.mil -- Downloaded: 2016-12-09T23:24Z
Check the source to verify that this is the current version before use.

G.5.6 (MC) Collateral Material (CM) Work Package. This work package shall be prepared for Marine Corps only manuals. This work package contains a list of items furnished with the end items upon initial issue and normally remain with the using unit during redistribution/rebuild or other change of custody of the end item unless otherwise directed by MARCORLOGCOM. These items are required to be maintained on hand, on order, or identified as an unfunded deficiency unless otherwise specifically directed. CM will be maintained and replaced by the using unit, except for materiel with 9999 series NSNs. Using units are not authorized to requisition items using the assigned 9999 series NSNs. The 9999 series NSN shown under the heading of "Collateral Materiel" is for control within the distribution system only, and is not authorized for requisitioning purposes. Items under this category will be requisitioned by individual NSN/NIIN, and/or part number and CAGE) Codes

G.5.6.1 (MC) Work package identification information **<wpidinfo>**. Work package identification information is required for this work package. (Refer to 4.7.9.3.)

G.5.6.2 (MC) Work package initial setup **<initial_setup>**. Initial setup is not required for this work package.

G.5.6.3 (MC) Introduction for collateral materials (CM) list work package **<intro>**. The following introduction (text within the quotation marks) shall be prepared and included verbatim:

"COLLATERAL MATERIAL(CM) ITEMS LIST
INTRODUCTION

Scope

This work package lists collateral material items you are authorized for the support of the (*enter item name*)

General

This list identifies items that are to be requisitioned by the using unit except those with 9999 NSN.

Explanation of Entries in the UURI

National Stock Number (NSN). Identifies the stock number of the item to be used for requisitioning purposes.

Description, Part Number/Commercial and Government Entity Code (CAGEC). Identifies the Federal item name (in all capital letters) followed by a minimum description when needed. The last line below the description is the part number and the CAGEC (in parentheses).

Usable On Code. When applicable, gives you a code if the item you need is not the same for different models of equipment. (*Add the following only as applicable. Replace Xs with appropriate codes and model numbers.*) These codes are identified below:

Source: https://assist.dla.mil -- Downloaded: 2016-12-09T23:24Z
Check the source to verify that this is the current version before use.

Code	Used on
XXX	*Model XXX*
XXX	*Model XXXX*
XXX	*Model XXXXX*

Add if applicable: Model XXX uses CM items (insert item numbers), Model XXXX uses CM items(insert item numbers), and Model XXXXX use CM items (insert item numbers.

U/I. Unit of Issue (U/I) indicates the physical measurement or count of the item as issued per the National Stock Number.

Qty Recm. Indicates the quantity recommended."

G.5.6.4 (MC) CM list. A tabular list **(standard information per 4.7.13.7)** of all CM items shall be prepared. The entries and subsequent information for this list shall be the same as the COEI/BII/SSR lists except the ILLUS NUMBER entry required for the COEI/BII/SSR lists shall not apply since no illustrations are used, and the QTY entry shall be QTY RECM (quantity recommended). The items shall be listed alphabetically.

G.5.7 Expendable and durable items list work package **<explistwp>**. This work package shall be prepared to provide the TM user a list of all expendable and durable items called out in the TM text that are necessary to operate and/or maintain the equipment. The following data described in G.5.7.1 through G.5.7.4 shall be included.

G.5.7.1 Work package identification information **<wpidinfo>**. Work package identification information is required for this work package. (Refer to 4.7.9.3.)

G.5.7.2 Work package initial setup **<initial_setup>**. Initial setup is not required for this work package.

G.5.7.3 Introduction for expendable and durable items list work package **<intro>**. The following introduction (text within the quotation marks) shall be prepared and included verbatim. (Refer also to FIGURE G-16.)

"**EXPENDABLE AND DURABLE ITEMS LIST**

INTRODUCTION

Scope

This work package lists expendable and durable items that you will need to operate and/or maintain the (*enter equipment/end item name*). This list is for information only and is not authority to requisition the listed items. These items are authorized to you by CTA 50-970, Expendable/Durable Items (Except Medical, Class V Repair Parts, and Heraldic Items), CTA 50-909, Field and Garrison Furnishings and Equipment or CTA 8-100, Army Medical Department Expendable/Durable Items.

Explanation of Columns in the Expendable/Durable Items List

Column (1) Item No. This number is assigned to the entry in the list and is referenced in the narrative instructions to identify the item (e.g., Use brake fluid (WP 0098, item 5)).

Source: https://assist.dla.mil -- Downloaded: 2016-12-09T23:24Z
Check the source to verify that this is the current version before use.

Column (2) Level. This column identifies the lowest class of maintenance that requires the listed item (*include as applicable: C = Crew, O = AMC, F = Maintainer or ASB, H = Below Depot or TASMG, D = Depot*).

Column (3) National Stock Number (NSN). This is the NSN assigned to the item which you can use to requisition it.

Column (4) Item Name, Description, Part Number/(CAGEC). This column provides the other information you need to identify the item. The last line below the description is the part number and the Commercial and Government Entity Code (CAGEC) (in parentheses).

Column (5) U/I. Unit of Issue (U/I) code shows the physical measurement or count of an item, such as gallon, dozen, gross, etc."

G.5.7.4 Expendable and durable items list **<explist>**. This list **(standard information per paragraph 4.7.13.7)** shall be prepared in tabular format as shown in FIGURE G-16 and include the following information:

a. Item number.
b. Lowest maintenance class.
c. National Stock Number (NSN).
d. Item name or nomenclature.
e. If applicable, a description.
f. Part number.
g. Commercial and Government Entity Code (CAGEC).
h. Unit of Issue (U/I).

No illustrations shall be prepared for these items. Items appearing in the tabular list shall appear in alphabetical sequence by item name. Items to be listed shall be those approved by the acquiring activity.

G.5.8 Tool identification list work package (**Maintainer/AMC and above**) **<toolidwp>**. This work package shall be prepared and shall include a list of all the common and special tools authorized to the levels of maintenance covered in the narrative portion of the TM and as referenced by the initial setups. A tool identification list shall include sets, kits or outfits and the tools used from these sets, kits, or outfits and referenced within the initial setups. For DMWRs/NMWRs, a list of all common and special tools and TMDE not contained in lower level TMs or in the RPSTL and required to perform the procedures in the DMWR/NMWR shall be included. This list shall include any special inspection equipment used only for the item that the DMWR/NMWR covers. The following data described in G.5.8.1 through G.5.8.4 shall be included. If there are no tools required for maintenance of the equipment, the following statement shall be included in the tool identification list work package in lieu of the tool list table:

"No tools are required for the maintenance of (*insert the system name*)."

G.5.8.1 Work package identification information **<wpidinfo>**. Work package identification information is required for this work package. (Refer to 4.7.9.3.)

Source: https://assist.dla.mil -- Downloaded: 2016-12-09T23:24Z
Check the source to verify that this is the current version before use.

G.5.8.2 Work package initial setup **<initial_setup>**. Initial setup is not required for this work package.

G.5.8.3 Introduction for tool identification list work package **<intro>**. The following introduction (text within the quotation marks) shall be prepared and included verbatim. (Refer to FIGURE G-17.)

"**TOOL IDENTIFICATION LIST**

INTRODUCTION

Scope

This work package lists all common and special tools, supplements, fixtures needed to maintain the (*insert equipment name*)."

OR

"This work package lists all common and special tools and equipment not listed in the lower level manuals for this system and that are needed to maintain the (*insert equipment name*)." **(DMWRs/NMWRs only)**

"**Explanation of Columns in the Tool Identification List**

Column (1) Item No. This number is assigned to the entry in the list and is referenced in the initial setup to identify the item (e.g., Extractor (WP 0090, item 32)).

Column (2) Item Name. This column lists the item by noun nomenclature and other descriptive features (e.g., Gauge, belt tension).

Column (3) National Stock Number (NSN). This is the National Stock Number (NSN) assigned to the item; use it to requisition the item.

Column (4) Part Number/(CAGEC). Indicates the primary number used by the manufacturer (individual, company, firm, corporation, or Government activity) which controls the design and characteristics of the item by means of its engineering drawings, specifications, standards, and inspection requirements to identify an item or range of items. The manufacturer's Commercial and Government Entity Code (CAGEC) is also included.

Column (5) Reference. This column identifies the authorizing supply catalog, components list, or RPSTL for items listed in this work package." **(Not required for DMWRs/NMWRs)**

G.5.8.4 Tool identification list **<toolidlist>**. Applicable information for this tabular list **(standard information per paragraph 4.7.13.7)** shall be prepared, formatted as shown in FIGURE G-17, and include the following information:

a. Item number.
b. Item name or nomenclature.
c. National Stock Number (NSN).
d. Part Number.
e. Commercial and Government Entity Code (CAGEC).

Source: https://assist.dla.mil -- Downloaded: 2016-12-09T23:24Z
Check the source to verify that this is the current version before use.

f. Reference.

Item names shall be in alphabetical order. A lead-in paragraph to the tool identification list may be included.

G.5.9 Mandatory replacement parts list (MRPL) work package (**Maintainer/AMC and above**) **<mrplwp>**. This work package shall be prepared and shall list all mandatory replacement parts (MRPs) referenced in the task initial setups for all maintenance tasks in the manual including PMCS tasks. For **DMWRs/NMWRs**, a mandatory replacement parts list consisting of all items that must be replaced during the repair and overhaul of the equipment, whether or not they have been disturbed, shall be developed. When an item or component is not disassembled based on preshop analysis (PSA), the item will not be disassembled for the sole purpose to add a mandatory part. All items that must be replaced during overhaul or repair procedures (based on usage intervals such as miles, time, or rounds fired, or replaced on a time between overhaul (TBO) interval) shall be included in the parts list table. A reference shall be made to the TM that covers the equipment. The following data described in G.5.9.1 through G.5.9.4 shall be included. If there are no mandatory replacement parts for the equipment, the following shall be entered in the mandatory replacement parts work package in lieu of the tabular list of mandatory replacement parts:

"No mandatory replacement parts are required for the maintenance of (*insert system name*)."

G.5.9.1 Work package identification information **<wpidinfo>**. Work package identification information is required for this work package. (Refer to 4.7.9.3.)

G.5.9.2 Work package initial setup **<initial_setup>**. Initial setup is not required for this work package.

G.5.9.3 Introduction for mandatory replacement parts work package **<intro>**. Introduction for mandatory replacement parts work package **<intro>**. The following introduction (text within the quotation marks) shall be prepared and included verbatim. (Refer also to FIGURE G-18.):

"**INTRODUCTION**

Scope

This work package includes a list of all the mandatory replacement parts referenced in the task initial setups and procedures including those referenced in Preventive Maintenance Checks and Services. These are items that must be replaced during maintenance whether they have failed or not. This includes items based on usage intervals such as miles, time, rounds fired, etc.

Explanation of Columns in the Mandatory Replacement Parts List

Column (1) Item No. This number is assigned to the entry in the list and is referenced in the narrative instructions to identify the item (e.g., Use O-ring (WP 0098, item 5)).

Column (2) Part Number (CAGEC). Identifies the part number and CAGEC of the item to be used for requisitioning purposes.

Column (3) National Stock Number (NSN) Identifies the stock number of the item to be used for requisitioning purposes.

Source: https://assist.dla.mil -- Downloaded: 2016-12-09T23:24Z
Check the source to verify that this is the current version before use.

Column (4) Description This column lists the item by noun nomenclature and other descriptive features (e.g., Gauge, belt tension).

Column (5) Qty. Indicates the quantity required."

G.5.9.4 Mandatory replacement parts list **<mrpl>**. This work package shall include a tabular list **<mrpl> (standard information per paragraph 4.7.13.7)** of mandatory replacement parts. Mandatory replacement parts shall be listed (standard column headings in quotes) by item number **<itemno>** "Item No.," part number **<partno>** and CAGEC **<cageno>** "Part Number/(CAGEC)," NSN **<nsn>** **"**National Stock Number (NSN)," nomenclature **<name>** "Nomenclature," and quantity **<qty>** "Qty." Items shall be listed in alphanumeric order by part number. (Refer to FIGURE G-18.) Refer to FIGURE G-19 for example of opting out of mandatory replacement parts.

G.5.10 Critical safety items (CSIs) work package **<csi.wp>**. This work package shall be developed. The following data described in G.5.10.1 through G.5.10.3 shall be included in the work package.

G.5.10.1 Work package identification information **<wpidinfo>**. Work package identification information is required for this work package. (Refer to 4.7.9.3.)

G.5.10.2 Work package initial setup **<initial_setup>**. Initial setup is not required for this work package.

G.5.10.3 Critical Safety Items (CSIs) **<csi>**. This work package shall be prepared on any system that contains a CSI. All CSIs shall be listed (standard column headings are shown in quotes) by their nomenclature **<name>** "Nomenclature," part number **<partno>** and Commercial and Government Entity Code CAGEC **<cageno>** "Part Number/(CAGEC)" and critical characteristic **<desc>** "Critical Characteristic". (Refer to FIGURE G-20.) If there are no critical safety items for the equipment, the following statement shall be entered in the CSI work package in lieu of the table:

"There are no critical safety items for the (*insert system name*)."

G.5.11 Support items work package **<supitemwp>**. This work package shall be prepared as directed by the acquiring activity and shall combine any of the supporting lists described in G.5.4 through G.5.10, as applicable. This work package shall be developed when the data contained in these supporting lists are minimal and creating a separate work package for each list is unnecessary.

G.5.11.1 Work package identification information **<wpidinfo>**. Work package identification information is required for this work package. (Refer to 4.7.9.3.)

G.5.11.2 Work package initial setup **<initial_setup>**. Initial setup is not required for this work package.

G.5.11.3 Introduction **<intro>**. The work package may include an introduction to the information.

G.5.11.4 Support items lists. The work package shall include the applicable lists described in G.5.4 through G.5.10.

Source: https://assist.dla.mil -- Downloaded: 2016-12-09T23:24Z
Check the source to verify that this is the current version before use.

G.5.12 Additional work packages **<genwp>**. When specified by the acquiring activity additional work packages shall be prepared when the work packages previously described herein do not support the data/information to be presented.

G.5.12.1 Work package identification information **<wpidinfo>**. Work package identification information is required for this work package. (Refer to 4.7.9.3.)

G.5.12.2 Work package initial setup **<initial_setup>**. Initial setup is not required for this work package.

G.6 **NOTES.**

The notes in section 6 apply to this appendix.

Source: https://assist.dla.mil -- Downloaded: 2016-12-09T23:24Z
Check the source to verify that this is the current version before use.

TM NUMBER **0438**

MAINTAINER REFERENCES

SCOPE

This work package lists all field manuals, forms, technical manuals, and miscellaneous publications referenced in this manual.

FIELD MANUALS

ATTP 3-97.11	Cold Region Operations
FM 3-11.3	Multi-service Tactics, Techniques and Procedures for Chemical, Biological, Radiological, and Nuclear Contamination Avoidance
FM 3-97.6	Mountain Operations
FM 4-25.11	First Aid
FM 90-3	Desert Operations

FORMS

DA Form 2028	Recommended Changes to Publications and Blank Forms
DA Form 2062	Hand Receipt/Annex Number
DA Form 2404	Equipment Inspection and Maintenance Worksheet
DA Form 2408	Equipment Log Assembly (Records)
DA Form 2408-4-1	Weapon Record Data
DA Form 2408-9	Equipment Control Record
DA Form 2408-14	Uncorrected Fault Record
DA Form 2408-20	Oil Analysis Log
DD 518	Accident Identification Card
SF 91	Motor Vehicle Accident Report
SF 368	Product Quality Deficiency Report

TECHNICAL MANUALS

TM 4-33.31	Operation and Maintenance of Ordnance Materiel in Cold Weather
TM 9-1300-200	Ammunition, General
TM 11-5965-286-14	Headset-Microphone Kit
TM 750-244-6	Procedures for Destruction of TACOM Equipment to Prevent Enemy Use

END OF WORK PACKAGE

0438-1/blank

FIGURE G-1. Example of references.

Source: https://assist.dla.mil -- Downloaded: 2016-12-09T23:24Z
Check the source to verify that this is the current version before use.

MAINTENANCE ALLOCATION CHART (MAC)

INTRODUCTION

The Army Maintenance System MAC

This introduction provides a general explanation of the maintenance and repair functions.

The MAC (immediately following this introduction) designates overall authority and responsibility for the performance of maintenance tasks on the identified end item or component. The application of the maintenance tasks to the end item or component shall be consistent with the capacities and capabilities of the designated maintenance levels/classes, which are shown in the MAC in column (4). Column (4) is divided into two secondary columns. These columns indicate the maintenance levels/classes of 'Field' and 'Sustainment'. Each maintenance level column is further divided into two sub-columns. These sub-columns identify the maintenance classes and are as follows:

1. Field level maintenance classes:

    a. Crew (operator) maintenance. This is the responsibility of a using organization to perform maintenance on its assigned equipment. It normally consists of inspecting, servicing, lubricating, adjusting, and replacing parts, minor assemblies, and subassemblies. Items with a "C" ("O" for joint service reporting) in the third position of the Source, Maintenance, and Recoverability (SMR) code may be replaced at the crew(operator) class. A code of "C" ("O" for joint service) in the fourth position of the SMR code indicates complete repair is authorized at the crew (operator) class.

    b. Maintainer maintenance. This is maintenance accomplished on a component, accessory, assembly, subassembly, plug-in unit, or other portion by field level units. This maintenance is performed either on the system or after it is removed. An "F" in the third position of the SMR code indicates replacement of assemblies, subassemblies, or other components is authorized at this level. An "F" in the fourth position of the SMR code indicates complete repair of the identified item is allowed at the Maintainer class. Items repaired at this level are normally returned to the user after maintenance is performed.

2. Sustainment level maintenance classes:

    a. Below depot sustainment. This is maintenance accomplished on a component, accessory, assembly, subassembly, plug-in unit, or other portion either on the system or after it is removed. The item subject to maintenance has normally been forwarded to a maintenance facility away from the field level supporting units. An "H" in the third position of the SMR code indicates replacement of assemblies, subassemblies, or other components is authorized at this class. An "H" appearing in the fourth position of the SMR code indicates complete repair is possible at this class. Items are normally returned to the supply system after maintenance is performed at this class.

0439-1

FIGURE G-2. Example of non-aviation MAC introduction.

Source: https://assist.dla.mil -- Downloaded: 2016-12-09T23:24Z
Check the source to verify that this is the current version before use.

MAINTENANCE ALLOCATION CHART (MAC)

INTRODUCTION

Aviation Maintenance Allocation Chart

The MAC (immediately following the introduction) designates overall authority and responsibility for the performance of maintenance tasks on the identified end item or component. The application of the maintenance tasks to the end item or component shall be consistent with the capacities and capabilities of the designated maintenance level which are shown on the MAC as:

Field - includes two columns:
"O" which corresponds to Aviation Maintenance Company (AMC) and
"F" which corresponds to Aviation Support Battalion (ASB)

Sustainment - includes two columns:
"L" which corresponds to Theater Aviation Sustainment Maintenance Group (TASMG) and other organizations that have National Maintenance Program certification and
"D" which corresponds to Depot

The maintenance to be performed is described as follows:

1. Field maintenance activities:

a. Aviation Maintenance Company (AMC). The aviation maintenance company is the lowest class of aviation field maintenance. The AMC provides direct support to aircraft operations, performing functions of aircraft servicing (daily, preflight, post-flight inspections, refuel, arming), Battle Damage Assessment and Repair (BDAR), and repair or replacement actions as specified in the MAC.

b. Aviation Support Company (ASC) in the Aviation Support Battalion (ASB). The ASB performs the following types of maintenance:

(1) Off equipment repair of LRUs or other components within the limits prescribed in the MAC.
(2) Inspections beyond the capability of the AMC.
(3) BDAR as required.
(4) Provide support to AMC personnel during peak workload periods as determined by local policy.

2. Sustainment maintenance:

a. Theater Aviation Sustainment Maintenance Group (TASMG) (deployed). The AVCRAD/TASMG performs the following:

0439-1

FIGURE G-3. Example of aviation MAC introduction.

Source: https://assist.dla.mil -- Downloaded: 2016-12-09T23:24Z
Check the source to verify that this is the current version before use.

TM X-XXXX-XXX-XX **0440**

MAINTENANCE ALLOCATION CHART (MAC)

Table 1. MAC for TSEC/ST-34

(1) GROUP NUMBER	(2) COMPONENT/ ASSEMBLY	(3) MAINTENANCE FUNCTION	(4) MAINTENANCE LEVEL				(5) TOOLS & EQUIP REFERENCE CODE	(6) REMARKS CODE
			FIELD		SUSTAINMENT			
			CREW (C)	MAINTAINER (F)	BELOW DEPOT (H)	DEPOT (D)		
00	TSEC/ST-34	INSPECT	0.1					A
		SERVICE	0.2					B
		REPLACE	0.3				1	C, D
		TEST	0.4					E
		REPAIR		1.5			1,2	F
		REPAIR			2.0		1, 2, 3, 4, 5	G, H
		REPAIR				2.0	1, 2, 3, 4, 5, 6, 7, 8	I
		OVERHAUL			16.0		1, 2, 3, 4, 5, 6, 7, 8	J
01	POWER UNIT. STP-	INSPECT	0.1					A
		TEST	0.3					E
		REPAIR		1.8			1, 2	F
		REPAIR			2.0		1, 2, 3, 4, 5	G, J
		REPAIR				2.0	1, 2, 3, 4, 5, 6, 7, 8	H
0101	PRINT CIRCUIT BOARDS							
010101	E-EB/01	INSPECT		0.1				A
		REPLACE		0.5			1, 2	A
		TEST				1.0	1, 2, 3, 6, 7, 8	I
		REPAIR		0.5			1	
		REPLACE				2.0	1, 2, 3, 4, 6, 7, 8	G
010102	SWITCHING ASSEMBLY	INSPECT	0.1	0.1			1	A
		REPLACE	0.5	0.5			1	
		TEST				1.0	1, 2, 3, 6, 7, 8	
		REPAIR				2.0	1, 2, 3, 4, 6, 7, 8	H
02	LOGIC UNIT,	INSPECT	--					A
		TEST	--					E
		REPAIR		1.0			1, 2	F
		REPAIR			2.0		1, 2, 3, 4, 5	

0440-1

FIGURE G-4. Example of a non-aviation MAC.

Source: https://assist.dla.mil -- Downloaded: 2016-12-09T23:24Z
Check the source to verify that this is the current version before use.

TM X-XXXX-XXX-XX **0440**

MAINTENANCE ALLOCATION CHART (MAC)

Table 1. MAC for TSEC/ST-34

(1) GROUP NUMBER	(2) COMPONENT/ ASSEMBLY	(3) MAINTENANCE FUNCTION	(4) MAINTENANCE LEVEL				(5) TOOLS & EQUIP REFERENCE CODE	(6) REMARKS CODE
			FIELD		SUSTAINMENT			
			CREW (C)*	MAINTAINER (F)	BELOW DEPOT (H)	DEPOT (D)		
00	TSEC/ST-34	INSPECT	0.1					A
		SERVICE	0.2					B
		REPLACE	0.3				1	C, D
		TEST	0.4					E
		REPAIR		1.5			1,2	F
		REPAIR			2.0		1, 2, 3, 4, 5	G, H
		REPAIR				2.0	1, 2, 3, 4, 5, 6, 7, 8	I
		OVERHAUL			16.0		1, 2, 3, 4, 5, 6, 7, 8	J
01	POWER UNIT. STP-	INSPECT	0.1					A
		TEST	0.3					E
		REPAIR		1.8			1, 2	F
		REPAIR			2.0		1, 2, 3, 4, 5	G, J
		REPAIR				2.0	1, 2, 3, 4, 5, 6, 7, 8	H
0101	PRINT CIRCUIT BOARDS							
010101	E-EB/01	INSPECT		0.1				A
		REPLACE		0.5			1, 2	A
		TEST				1.0	1, 2, 3, 6, 7, 8	I
		REPAIR		0.5			1	
		REPLACE				2.0	1, 2, 3, 4, 6, 7, 8	G
010102	SWITCHING ASSEMBLY	INSPECT	0.1	0.1			1	A
		REPLACE	0.5	0.5			1	
		TEST				1.0	1, 2, 3, 6, 7, 8	
		REPAIR				2.0	1, 2, 3, 4, 6, 7, 8	H
02	LOGIC UNIT,	INSPECT	--					A
		TEST	--					E
		REPAIR		1.0			1, 2	F
		REPAIR			2.0		1, 2, 3, 4, 5	

*This is a joint service manual. While Army uses a “C”, other services may use an “O” in this column.

0440-1

FIGURE G-5. Example of joint service non-aviation MAC.

Source: https://assist.dla.mil -- Downloaded: 2016-12-09T23:24Z
Check the source to verify that this is the current version before use.

TM X XXXX-XXX-XX **0442**

AVIATION MAINTENANCE ALLOCATION CHART (MAC)

Table 1. MAC for T-XXX Turbine Engine

(1) GROUP NUMBER	(2) DESCRIPTION	(3) MAINTENANCE FUNCTION	(4) MAINTENANCE LEVEL				(5) TOOLS & EQUIP REFERENCE CODE	(6) REMARKS CODE
			FIELD		SUSTAINMENT			
			AMC (O)	ASB (F)	TASMG (L)	DEPOT (D)		
04	POWER PLANT							
0401	ENGINE, TURBINE	INSPECT	0.1				1	A
		TEST	0.1					B
		TEST		0.2				
		TEST			0.3			
		SERVICE	0.2					C
		REPLACE		0.4				
		REPAIR		0.4				
		REPAIR			0.4			
		OVERHAUL				3.0		A
040101	EXTERNAL LINES & HOSES	INSPECT	0.1				3	D
		TEST		0.2				
		REPLACE	0.5					
		REPAIR		1.0				
0402	COMPRESSOR SECTION (COLD SECTION MODULE	INSPECT	0.1					E
		INSPECT		0.2				
		TEST		0.2				
		SERVICE	0.2					
		REPAIR		0.4				
		REPAIR			0.6			
		OVERHAUL				4.0		

0442-1

FIGURE G-6. Example of an aviation MAC.

Source: https://assist.dla.mil -- Downloaded: 2016-12-09T23:24Z
Check the source to verify that this is the current version before use.

Table 2. Tools and Test Equipment for TSEC/ST-34

TOOLS OR TEST EQUIPMENT	MAINTENANCE LEVEL	NOMENCLATURE	NATIONAL STOCK NUMBER	TOOL NUMBER
1	H	Automatic test system ST-51	5810-00-089-4599	TSEC/ST-51
2	F	Multimeter, digital	6625-01-139-2512	AN/PSM-45
3	D	Multimeter, digital	6625-01-145-2430	AN/USM 486
4	H	Oscilloscope	6625-01-187-7847	AN/USM 488
5	D	Power supply (0-35 VDC 2.4A)	6130-00-006-5524	HP 6434B86
6	D	Power supplytester	NOT APPLICABLE	ON502427
7	H	Repair and soldering center (page)	4940-01-031-4541	PRC-350C/equip
8	F	Tool kit, electronic equipment	5180-00-610-8177	TK-105/6

Table 3. Remarks for TSEC/ST-34

REMARKS CODES	REMARKS
A	External
B	Preventive maintenance checks and services (PMCS)
C	Replace rack installed unit, 0.4 hrs
D	Bench top use only, 0.1 hrs
E	Selftest
F	Repair by PMA and authorized component replacement only
G	Complete unit and subassembly repair (except STP-34 switching assembly and E-EBO/1)
H	Complete unit and subassembly repair
I	In compliance with TSEC/ST-34 CIDOS
J	Function performed by specialized repair activity (SRA). (theater COMSEC Logistics Center-Europe or Lexington-Blue Grass Army Depot)

END OF WORK PACKAGE

FIGURE G-7. <u>Example of non-aviation MAC tools and test equipment and remarks tables.</u>

Source: https://assist.dla.mil -- Downloaded: 2016-12-09T23:24Z
Check the source to verify that this is the current version before use.

Table 2. Tools and Test Equipment for T-xxx Turbine Engine

TOOLS OR TEST EQUIPMENT	MAINTENANCE LEVEL	NOMENCLATURE	NATIONAL STOCK NUMBER	TOOL NUMBER
1	AMC	Sling, aircraft maintenance	1730-00-903-5019	LTCT 773
2	AMC	Wrench, crowfoot	5120-00-034-6193	LTCT 4810
3	ASB	Wrench, socket	5120-00-875-2588	LTCT 393
4	ASB	Wrench, spanner	5120-00-886-1794	LTCT 9263

Table 3. Remarks for T-xxx Turbine Engine

REMARKS CODES	REMARKS
A	Diagnostic inspection using bprescope.
B	Functional test at AMC – engine in airframe.
C	Functional test at ASB – engine in METS
D	Repair at ASB includes the engine assembly, individual line replacement units (LRU) 9accessories) and modules.
E	Replace seal.
F	Repair limited to replacement of rotor assembly, stator, stage 1 nozzle, face type seal, and combiustion liner.
G	Repair limited to replacement of external lines, hoses, and line replacement units (LRU) (accessories).
H	Replacement of carbon seal.
I	Reset button.
J	Water wash.
K	Visible inspection without detailed disassembly.
L	All repair and replacement of parts performed by AMC is limited to authorized items listed in TM XX-XXXX-XXX-23P

END OF WORK PACKAGE

0440-2

FIGURE G-8. <u>Example of aviation two-level MAC tools and test equipment and remarks tables.</u>

Source: https://assist.dla.mil -- Downloaded: 2016-12-09T23:24Z
Check the source to verify that this is the current version before use.

OPERATOR
M198 HOWITZER
COMPONENTS OF END ITEM (COEI) AND BASIC ISSUE ITEMS (BII) LISTS

INTRODUCTION

Scope

This work package lists COEI and BII for the M198 howitzer to help you inventory items for safe and efficient operation of the equipment.

General

The COEI and BII information is divided into the following lists:

Components of End Item (COEI). This list is for information purposes only and is not authority to requisition replacements. These items are part of the M198 howitzer. As part of the end item, these items must be with the end item whenever it is issued or transferred between property accounts. Items of COEI are removed and separately packaged for transportation or shipment only when necessary. Illustrations are furnished to help you find and identify the items.

Basic Issue Items (BII). These essential items are required to place the M198 howitzer in operation, operate it, and to do emergency repairs. Although shipped separately packaged, BII must be with the M198 howitzer during operation and when it is transferred between property accounts. Listing these items is your authority to request/requisition them for replacement based on authorization of the end item by the TOE/MTOE. Illustrations are furnished to help you find and identify the items.

Explanation of Columns in the COEI List and BII List

Column (1), Illus Number, gives you the number of the item illustrated.

Column (2), National Stock Number, identifies the stock number of the item to be used for requisitioning purposes.

Column (3), Description, CAGEC, and Part Number, identifies the Federal item name (in all capital letters) followed by a minimum description when needed. The stowage location of COEI and BII is also included in this column. The last line below the description is the CAGEC (Commercial and Government Entity Code) (in parentheses) and the part number.

Column (4), Usable on Code, gives you a code if the item you need is not the same for different models of equipment. These codes are identified below:

Code	Used on
PAA	Model XXX
PAB	Model XXXX
PAC	Model XXXXX

PAA uses COEI items 1, 2, 4, 5, 6, 7, 9, and 10 and all BII items. PAB uses COEI items 1, 2, 3, 5, 6, 8, and 10 and all BII items. PBB uses COEI items 1, 2, 3, 5, 6, 9, 11, and 12 and all BII items.

Column (5), U/M (unit of measure), indicates how the item is issued for the National Stock Number shown in column (2).

Column (6), Qty Rqr, indicates the quantity required.

FIGURE G-9. (A) Example of an introduction for COEI and BII lists.

Source: https://assist.dla.mil -- Downloaded: 2016-12-09T23:24Z
Check the source to verify that this is the current version before use.

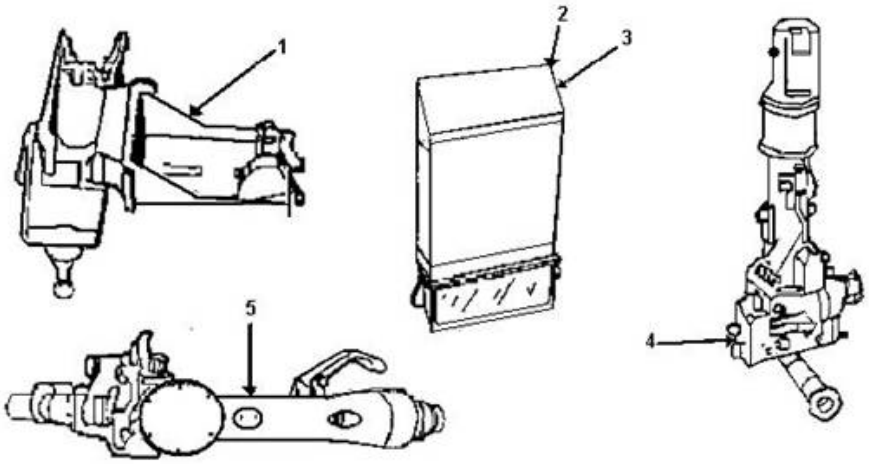

Table 1. Components of End Item List

(1) Illus number	(2) National Stock Number (NSN)	(3) Description, Part Number/CAGEC)	(4) Usable On Code	(5) U/I	(6) Qty Rqr
1	1005-00-706-8880	MOUNT,MACHINE GUN 1:cal. .50 (in mount on cupola) 7068880(19204)	PAA	EA	1
2	1240-00-344-4643	PERISCOPE:M27 (chief of section) (stowage box cab wall) 7633132(19200)	PAA	EA	1
3	1240-00-509-2743	PERISCOPE:M45 (driver's) (stowage box driver's compartment) 8213430(19200)	PAA	EA	1
4	1240-00-864-2930	TELESCOPE, PANORAMIC M117 (in mount M145 or telescope box) 7660400(19200)	PAA	EA	1
5	1240-00-491-9676	TELESCOPE, ELBOW:M118CA1 (in mountM146) 10559855(19200)	PAB	EA	1

0441-2

FIGURE G-10. (A) <u>Example of COEI list, single table (Method A)</u>.

Source: https://assist.dla.mil -- Downloaded: 2016-12-09T23:24Z
Check the source to verify that this is the current version before use.

TM X-XXXX-XXX-XX 0341

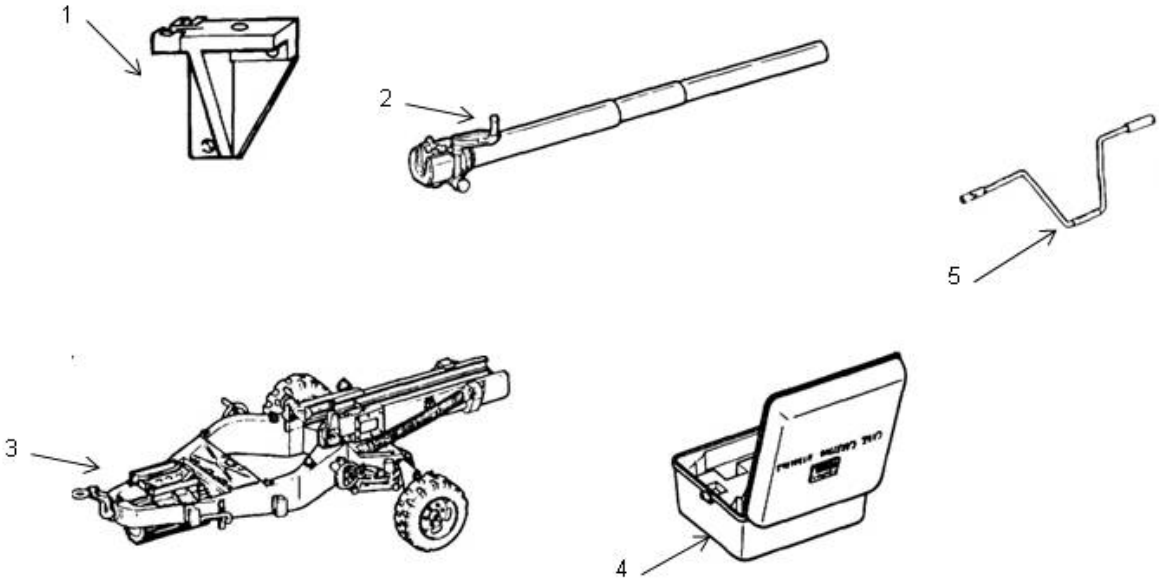

Table 1. Components of End Item List, Part 1

(1) Illus number	(2) National Stock Number (NSN)	(3) Description, Part Number/CAGEC)	(4) Usable On Code	(5) U/I	(6) Qty Rqr
1	1290-01-127-7816	BRACKET, ANTENNA MOUNTING: 11785066 (19200)		EA	1
2	1015-00-927-9421	CANNON, 105mm HOWITZER, M137A1 11577648 (19208)		EA	1
3	NA	CARRIAGE, 105MM HOWITZER, M31 8433200 (19204)		EA	1
4	1015-01-028-4582	CASE, CARRYING 11729600-2		EA	1
5	1015-00-073-5372	CRANK ASSEMBLY 8432902 (19204)		EA	1

0341-2

FIGURE G-11. (A) <u>Example of COEI list, multiple tables (Method A)</u>.

Source: https://assist.dla.mil -- Downloaded: 2016-12-09T23:24Z
Check the source to verify that this is the current version before use.

TM X-XXXX-XXX-XX 0341

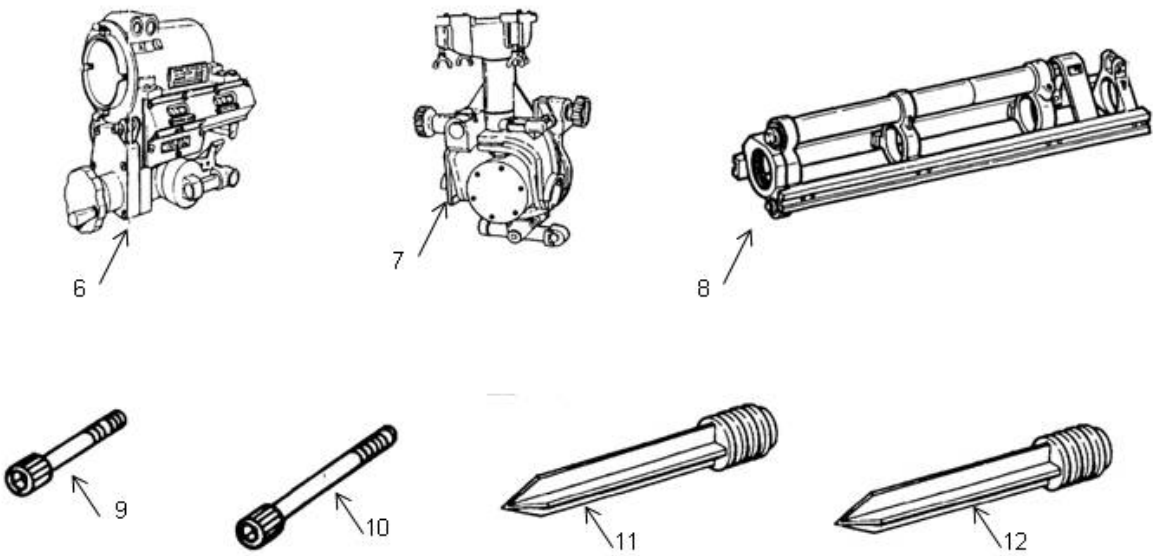

Table 2. Components of End Item List, Part 2

(1) Illus number	(2) National Stock Number (NSN)	(3) Description, Part Number/CAGEC)	(4) Usable On Code	(5) U/I	(6) Qty Rqr
6	1240-00-150-8890	MOUNT, TELSCOPE, M134A1 10553215 (19200)		EA	1
7	1290-00-150-8891	QUADRANT, FIRE CONTROL, M14A1 11730915 (19200)		EA	1
8	1015-00-316-0251	RECOIL MECHANISM, 105MM HOWITZER, M37A1 12000725 (19204)		EA	1
9	5305-00-983-7466	SCREW, CAP, SOCKET HEAD MS16997-148 (96906)		EA	1
10	5305-00-958-7483	SCREW, CAP, SOCKET HEAD MS16997-151 (96906)		EA	2
11	1015-00-987-8738	STAKE, CARRIAGE: 24-IN. LONG 8436590 (19204		EA	8
12	1015-00-987-8738	STAKE, CARRIAGE: 24-IN. LONG 8436590 (19204		EA	4

0341-3

FIGURE G-11. (A) <u>Example of COEI list, multiple tables (Method A) - Continued</u>.

Source: https://assist.dla.mil -- Downloaded: 2016-12-09T23:24Z
Check the source to verify that this is the current version before use.

Table 1. Components of End Item List

(1) Illus number	(2) National Stock Number (NSN)	(3) Description, Part Number/CAGEC)	(4) Usable On Code	(5) U/I	(6) Qty Rqr
1	1005-00-706-8880 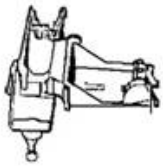	MOUNT,MACHINE GUN 1:cal. .50 (in mount on cupola) 7068880(19204)	PAA	EA	1
2	1240-00-344-4643	PERISCOPE:M27 (chief of section) (stowage box cab wall) 7633132(19200)	PAA	EA	1
3	1240-00-509-2743	PERISCOPE:M45 (driver's) (stowage box driver's compartment) 8213430(19200)	PAA	EA	1
4	1240-00-864-2930	TELESCOPE,PANORAMIC M117 (in mount M145 or telescope box) 7660400(19200)	PAA	EA	1
5	1240-00-491-9676 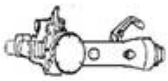	TELESCOPE,ELBOW:M118CA1 (in mountM146) 10559855(19200)	PAB	EA	1

0441-2

FIGURE G-12. (A) <u>Example of COEI list (Method B).</u>

Source: https://assist.dla.mil -- Downloaded: 2016-12-09T23:24Z
Check the source to verify that this is the current version before use.

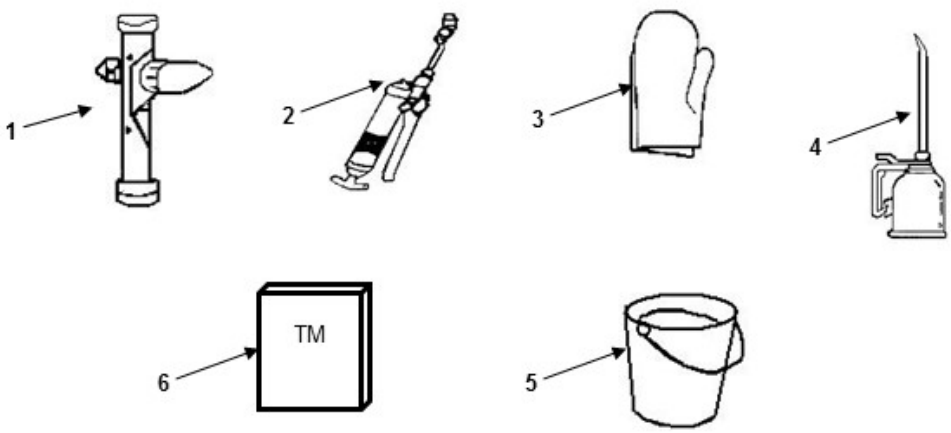

Table 2. Basic Issue Items (BII)

(1) Illus number	(2) National Stock Number (NSN)	(3) Description, Part Number/CAGEC)	(4) Usable On Code	(5) U/I	(6) Qty Rqr
1	1290-00-535-7629	LIGHT, AIMING POST; M14 7197188(19200)	PAA	EA	2
2	4930-00-766-3545	LUBRICATING GUN, HAND: high pressure (in tool bag) 102758(36251)	PAA	EA	1
3	8415-00-266-8843	MITTENS, CLOTH: (pair)M1942 (in oddment tray) 11655982(19207)	PAA	EA	2
4	4930-00-262-8868	OILER, HAND: steel, pump type, 1pt, spout 9 lg (in left cab door stowage box) 328(72798)	PAA	EA	1
5	7240-00-160-0455	PAIL, UTILITY: 14-qt capability (on vehicle floor) RRP35(81348)	PAA	EA	1
6		Technical Manual (TM X-XXXX-XX-10)		EA	1

END OF WORK PACKAGE

0441-3/blank

FIGURE G-13. (A) Example of BII list (Method A).

Source: https://assist.dla.mil -- Downloaded: 2016-12-09T23:24Z
Check the source to verify that this is the current version before use.

Table 2. Basic Issue Items (BII)

(1) Illus number	(2) National Stock Number (NSN)	(3) Description, Part Number/CAGEC)	(4) Usable On Code	(5) U/I	(6) Qty Rqr
1	1290-00-535-7629	LIGHT, AIMING POST; M14 7197188(19200)	PAA	EA	2
2	4930-00-766-3545	LUBRICATING GUN, HAND: high pressure (in tool bag) 102758(36251)	PAA	EA	1
3	8415-00-266-8843	MITTENS, CLOTH: (pair)M1942 (in oddment tray) 11655982(19207)	PAA	EA	2
4	4930-00-262-8868	OILER, HAND: steel, pump type, 1 pt, spout 9 lg (in left cab door stowage box) 328(72798)	PAA	EA	1
5	7240-00-160-0455	PAIL, UTILITY: 14-qt capability (on vehicle floor) RRP35(81348)	PAA	EA	1
6		Technical Manual (TM X-XXXX-XXX-10)		EA	1

END OF WORK PACKAGE

0441-3/blank

FIGURE G-14. <u>(A) Example of BII list (Method B).</u>

Source: https://assist.dla.mil -- Downloaded: 2016-12-09T23:24Z
Check the source to verify that this is the current version before use.

TM X-XXXX-XXX-XX 0442

CREW
NBCRS FOX M93A1
ADDITIONAL AUTHORIZATION LIST (AAL)

INTRODUCTION

Scope

This work package lists additional items you are authorized for the support of the NBCRS FOX M93A1.

General

This list identifies items that do not have to accompany the NBCRS FOX M93A1 and that do not have to be turned in with it.

These items are all authorized to you by CTA, MTOE, TDA, or JTA.

Explanation of Columns in the AAL

Column (1) National Stock Number (NSN). Identifies the stock number of the item to be used for requisitioning purposes.

Column (2) Description, Part Number/(CAGEC). Identifies the Federal item name (in all capital letters) followed by a minimum description when needed. The last line below the description is the part number and Commercial and Government Entity Code (CAGEC) (in parentheses).

Column (3) Usable On Code. When applicable, gives you a code if the item you need is not the same for different models of equipment.

Column (4) U/I. Unit of Issue (U/I) indicates the physical measurement or count of the item as issued per the National Stock Number shown in column (1).

Column (5) Qty Recm. Indicates the quantity recommended.

Table 1. Additional Authorization List

(1) National Stock Number (NSN)	(2) Description, Part Number/CAGEC)	(3) Usable On Code	(4) U/I	(5) Qty Rqr
6665-01-105-5623	ALARM, CHEMICAL AGENT 8762101(19200)		EA	1
1240-01-207-5787	BINOCULARS, MOD, CON M22 9370122(19200)		EA	1
2590-01-148-7961	CABLE KIT, SPECIAL PURPOSE 223592-2000(19200)		EA	2
1080-00-623-7295	CAMOUFLAGE SCREEN WOODLAND/DST POLES 11655722(34623)		EA	1
1080-00-103-1246	CAMOUFLAGE SCREEN WOODLAND RAD SCT 11655720(34623)		EA	1
6665-01-199-4153	CHEMICAL AGENT MONITOR (CAM) 11645620(34623)		EA	1

END OF WORK PACKAGE

0442-1/blank

FIGURE G-15. (A) Example of an AAL.

Source: https://assist.dla.mil -- Downloaded: 2016-12-09T23:24Z
Check the source to verify that this is the current version before use.

CREW
NBCRS FOX M93A1
EXPENDABLE AND DURABLE ITEMS LIST

INTRODUCTION

Scope
This work package lists expendable and durable items that you will need to operate and/or maintain the NBCRS FOX M93A1. This list is for information only and is not authority to requisition the listed items. These items are authorized to you by CTA 50-970, Expendable/Durable Items (Except Medical, Class V Repair Parts, and Heraldic Items), CTA 50–909, Field and Garrison Furnishings and Equipment, or CTA 8-100, Army Medical Department Expendable/Durable Items.

Explanations of Columns in the Expendable / Durable Items List

Column (1) Item No. This number is assigned to the entry in the list and is referenced in the narrative instructions to identify the item (e.g., "Use brake fluid (WP 0098, Item 5).").

Column (2) Level. This column includes the lowest level of maintenance that requires the listed item (C = Operator/Crew).

Column (3) National Stock Number (NSN). This is the NSN assigned to the item which you can use to requisition it.

Column (4) Item Name, Description, Part Number/(CAGEC). This column provides the other information you need to identify the item. The last line below the description is the part number and the Commercial and Government Entity Code (CAGEC) (in parentheses).

Column (5) U/I. Unit of Issue (U/I) code shows the physical measurement or count of an item, such as gallon, dozen, gross, etc.

Table 1. Expendable and Durable Items List

(1) Item No.	(2) Level	(3) National Stock Number (NSN)	(4) Item Name, Description, Part Number/CAGEC)	(5) U/I
1	C	6810-00-201-0906	Alcohol, denatured, Grade III, 16 ounce bottle O-E-760 (81348)	BT
2	C	8030-01-138-1666	Antiseize Compound, 250-gram tube MIL-T-5544 (81349)	TU
3	C	6515-00-059-5235	Applicator, disposable, package of 1000 A-A-30016 (58536)	PK
4	C	8020-00-224-8024	Brush, artist, MTL ferrule, round, tapered point, Type I, camel hair H-B-118 (81348)	EA
5	C	9150-01-054-6453	Cleaner, Lubricant & Preservation (CLP), 1-pint bottle with sprayer MIL-L-63640 (81349)	P

END OF WORK PACKAGE

FIGURE G-16. Example of expendable and durable items list.

Source: https://assist.dla.mil -- Downloaded: 2016-12-09T23:24Z
Check the source to verify that this is the current version before use.

TM X-XXXX-XXX-XX 0444

MAINTAINER
MCLIC
TOOL IDENTIFICATION LIST

INTRODUCTION

Scope
This work package lists all common and special tools, supplements, and fixtures needed to maintain the MICLIC.

Explanation of Columns in the Tool Identification List

Column (1) Item No. This number is assigned to the entry in the list and is referenced in the initial setup to identify the item (e.g., "Extractor (WP 0090, Item 32)").

Column (2) Item Name. This column lists the item by noun nomenclature and other descriptive features (e.g., "Gage, belt tension").

Column (3) National Stock Number (NSN). This is the National Stock Number (NSN) assigned to the item; use it to requisition the item.

Column (4) Part Number/(CAGEC). Indicates the primary number used by the manufacturer (individual, company, firm, corporation, or Government activity) which controls the design and characteristics of the item by means of its engineering drawings, specifications, standards, and inspection requirements to identify an item or range of items. The manufacturer's Commercial and Government Entity Code (CAGEC) is also included.

Column (5) Reference. This column identifies the authorizing supply catalog or RPSTL for items listed in this work package.

Table 1. MCLIC Tool Identification List

(1) Item No.	(2) Item Name	(3) National Stock Number (NSN)	(4) Part Number/ CAGEC)	(5) Reference
1	Adapter, socket wrench, 1/2 inch-3/4 inch	5120-00-114-5207	11655788-3 (81349)	TM 9-2350-252-20P-1
2	Adapter, torque wrench, 1/2 inch drive, 1/2 inch	5120-00-399-1157	2588756 (81349)	TM 9-2350-252-20P-1
3	Adapter, torque wrench, 1/2 inch drive, 3/4 inch	5120-00-399-1154	2588757 (81349)	TM 9-2350-252-20P-1
4	Adapter, torque wrench, 1/2 inch drive, 5/16 inch	5120-01-115-1891	12298105-1 (81349)	TM 9-2350-252-20P-1
5	Adapter, torque wrench, 1/2 inch drive, 1/5216 inch	5120-00-215-8200	11663358-2 (81349)	TM 9-2350-252-20P-1
6	Adjusting tool, belt	4910-01-128-2670	3375058 (81349)	TM 9-2350-252-20P-1
7	Bit. Screwdriver, 1/4 inch drive	5120-00-316-9228	TMC105A (81349)	TM 9-2350-252-20P-1
8	Brush, Battery, Terminal		BTC3A (55719)	FRS CL 4950-95-E42
9	Caliper Set, Micrometer, Inside		KTCS0998 (00NS2)	SATS CL 4910-95-A81

0444-1

FIGURE G-17. Example of a tool identification list.

Source: https://assist.dla.mil -- Downloaded: 2016-12-09T23:24Z
Check the source to verify that this is the current version before use.

MAINTAINER
MANDATORY REPLACEMENT PARTS LIST

INTRODUCTION

Scope

This work package includes a list of all the mandatory replacement parts referenced in the task initial setups and procedures including those referenced in Preventive Maintenance Checks and Services. These are items that must be replaced during maintenance whether they have failed or not. This includes items based on usage intervals such as miles, time, rounds fired, etc.

Explanation of Columns in the Mandatory Replacement Parts List

Column (1) Item No. This number is assigned to the entry in the list and is referenced in the narrative instructions to identify the item (e.g., Use O-ring (WP 0098, item 5)).

Column (2) Part Number (CAGEC). Identifies the part number and CAGEC of the item to be used for requisitioning purposes.

Column (3) National Stock Number (NSN) Identifies the stock number of the item to be used for requisitioning purposes.

Column (4) Description This column lists the item by noun nomenclature and other descriptive features (e.g., Gauge, belt tension).

Column (5) Qty. Indicates the quantity required.

Table 1. Mandatory Replacement Parts List

(1) Item No.	(2) Part Number/ CAGEC)	(3) National Stock Number (NSN)	(4) Nomenclature	(5) Qty
1	12286941 (19207)	2940-01-086-1605	Filter assembly (part of kit, P/N 5705132)	1
2	M83248/1-014 (81349)	5330-00-166-0990	Preformed packing (item 54 is part of kit, P/N 5705132 4	4
3	M83248/1-115 (81349)	5330-00-166-1066	Preformed packing	2
4	M83248/1-904 (81349)	5330-00-020-0203	Preformed packing	5
5	M83248/1-905 (81349)	5330-00-167-5166	Preformed packing	2
6	M83248/1-906 (81349)	5330-00-020-0186	Preformed packing	2
7	M83248/1-908 (81349)	5330-00-020-0105	Preformed packing	3
8	M83248/1-910 (81349)	5330-00-020-0067	Preformed packing	3
9	M83248/1-916 (81349)	5330-00-165-4565	Preformed packing	1
10	MS35333-3	5310-00-576-5752	Lockwasher	4

END OF WORK PACKAGE

0446-1/blank

FIGURE G-18. Example of a mandatory replacement parts list.

Source: https://assist.dla.mil -- Downloaded: 2016-12-09T23:24Z
Check the source to verify that this is the current version before use.

MAINTAINER
MANDATORY REPLACEMENT PARTS LIST

MANDATORY REPLACEMENT PARTS LIST

There are no mandatory replacement parts for the XYZ system

END OF WORK PACKAGE

FIGURE G-19. Example of a mandatory replacement parts list opt out.

Source: https://assist.dla.mil -- Downloaded: 2016-12-09T23:24Z
Check the source to verify that this is the current version before use.

Table 1. Critical Safety Items (CSI) List

Nomenclature	Part Number/ CAGEC)	Critical Characteristics
Carrier Hub	7-311310016-3 (02731)	Process core and surface hardness
Cluster Gear	7-211310027-3 (02731)	Process core and surface hardness
Spur Gear	7-113100029-3 (02731)	Dimensions and contour of root area.
Gear	7-311310025-3 (02731)	Process core and surface hardness
Gearshaft	7-211310035-3 (02731)	Process core and surface hardness
Gearshaft	7-211310039-5 (02731)	Process core and surface hardness
Nut	7-113100121-3 (02731)	Process surface hardness.
Spindle	7-113100141-3 (02731)	Process core hardness.

END OF WORK PACKAGE

FIGURE G-20. Example of a critical safety items parts table.

Source: https://assist.dla.mil -- Downloaded: 2016-12-09T23:24Z
Check the source to verify that this is the current version before use.

APPENDIX H
DESTRUCTION OF ARMY MATERIEL TO PREVENT ENEMY USE

H.1 SCOPE.

H.1.1 Scope. This appendix establishes the technical content requirements for developing generic information and/or specific procedures regarding the destruction of Army materiel to prevent enemy use for major weapon systems and their related systems, subsystems, equipment, assemblies, components, SRUs, and LRUs. This appendix is a mandatory part of this standard. The information contained herein is intended for compliance. The requirements are applicable for all maintenance levels/classes through overhaul (depot), including DMWRs and NMWRs.

H.2 APPLICABLE DOCUMENTS.

The applicable documents in section 2 of the basic standard apply to this appendix.

H.3 DEFINITIONS.

The definitions in section 3 of the basic manual apply to this appendix.

H.4 GENERAL REQUIREMENTS.

H.4.1 General. The requirements provided in this appendix provide the technical content requirements for the preparation of destruction of Army materiel procedures. Several approaches are available for preparing manuals for destruction of Army materiel. These include, but are not limited to:

a. Instructions or procedures developed for a particular stock class of materiel, as identified by its Federal Supply Classification (FSC).
b. Procedures that provide detailed destruction instructions for specific weapons system(s) or equipment and any installed subsystems.
c. Simple standardized destruction methods based on the assumption that time and demolition materials may not always be available for carrying out complicated demolition or other destruction procedures.

H.4.2 Types of manuals. Each weapon system or major item of equipment shall have destruction procedures prepared that cover the approaches in H.4.1b and H.4.1c mentioned previously. Equipment managers may direct that a generic destruction manual be developed for assets they control in approach a that are not covered in a weapons system-specific manual. Equipment managers and weapons system program managers should work together to ensure that destruction procedures do not provide conflicting destruction requirements or overly duplicated destruction procedures. Some duplication of destruction procedures is allowed for components in a weapons system, but only those specific procedures (refer to H.5.4.4) for the component shall be duplicated. Duplication of this information is preferred to having users in a combat situation looking for destruction information in multiple TMs.

H.4.2.1 Destruction manuals for a Federal Supply Classification (FSC). When directed by an AMC supply class custodian or manager, a separate destruction TM <**destruction_manual**> shall be prepared. The manual shall contain generic destruction procedures and when possible should include specific procedures for each item in the stock class. The requirements in H.5.1 through H.5.4 shall be used.

Source: https://assist.dla.mil -- Downloaded: 2016-12-09T23:24Z
Check the source to verify that this is the current version before use.

H.4.2.2 Destruction manuals/work packages for weapon systems. Each weapons system shall have destruction procedures developed. If a separate manual is used, these procedures will be contained in a minimum of three work packages. The first shall be a general information work package **<ginfowp>** containing the information specified in H.5.2. The second shall be the introduction work package **<destruct-introwp>** with the information specified in H.5.3. The third and any succeeding work packages shall contain specific destruction procedures **<destruct-materialwp>** as specified in H.5.4.

H.4.3 Preparation of digital data for electronic delivery. Data prepared and delivered digitally in accordance with this standard shall be XML tagged using the current Army DTD. Data shall be formatted for presentation using the Army style sheets. Refer to 4.6 for information on obtaining or accessing the Army DTD and style sheets. XML tags used in the DTD are noted throughout the text of this standard in bracketed, bold characters (e.g., **<descwp>**) as a convenience for the author and to ensure that the tags are used correctly when developing a document instance.

H.4.4 Use of the Document Type Definition (DTD)/style sheet. The DTD referenced in this appendix interprets the technical content and structure for the functional requirements contained in this standard. Development of the page-based TMs shall be accomplished through the use of this standard, the Army DTD, and the Army style sheets. MIL-HDBK-1222 provides further guidance and preferred style and format. The guidance in MIL-HDBK-1222 shall be followed unless it conflicts with the requirements in this standard.

H.4.5 Content structure. The examples provided herein are an accurate representation of the content structure requirements contained in this appendix and shall be followed to permit the effective use of the DTD

H.4.6 Style and format. This standard provides style and format requirements for the technical content requirements described in this appendix. These requirements are considered mandatory and are intended for compliance.

H.4.7 Selective application and tailoring of content using Appendix A matrixes. This standard contains some requirements that may not be applicable to the preparation of all destruction TMs. Selective application and tailoring of requirements contained in this standard is the responsibility of the acquiring activity and shall be accomplished using APPENDIX A. The applicability of some requirements is also designated by one of the following statements: unless specified otherwise by the acquiring activity; as specified by the acquiring activity; or when specified by the acquiring activity.

H.4.8 General destruction rules. When preparing any destruction manual, the following priority guidelines shall be followed. These are provided to ensure a common approach to destruction of materiel:

a. Any cryptographic equipment or materiel shall be destroyed first.
b. Classified equipment or materiel is to be destroyed after any cryptographic assets. A statement to this effect shall be included in the introductory materiel. The destruction of classified materiel statement is required regardless of the classification of the materiel covered in the current TM.

Source: https://assist.dla.mil -- Downloaded: 2016-12-09T23:24Z
Check the source to verify that this is the current version before use.

c. Essential material shall be destroyed when time precludes the destruction of the entire system. In this case, essential material consists of such material identified for the system or stock class in the manual being prepared. The system manual shall include a list of essential material. A statement shall be included stating that essential material be destroyed in the order provided and that the same material be destroyed on each system. (Refer to H.5.3.7.)

d. Any repair parts that may be on the verge of capture shall be destroyed in the same order as the essential material.

H.5 **DETAILED REQUIREMENTS.**

H.5.1 Front and rear matter. When a stand-alone destruction manual is prepared, unless otherwise specified in this appendix, the front and rear matter requirements contained in 5.2.1 and 5.2.2. shall be used.

H.5.2 General information work package **<ginfowp>**. A general information work package shall be prepared. (Refer to B.5.2.) At a minimum, it shall contain a scope statement containing the following verbatim text:

> "This manual is for the guidance of those whose duty it is to render inoperable or destroy equipment which is in imminent danger of capture by an enemy."

For destruction procedures that will implement any international standards, the following text shall be included. For a stand-alone destruction manual, the statement shall be in the **<ginfowp>** scope paragraph. For destruction procedures included in a weapon system manual, this statement shall be included in the "How to Use the Manual" (italicized text within parentheses shall be replaced with the appropriate information).

> "Certain provisions of this technical manual (identify by chapter, work package, paragraph, or similar manner, if appropriate) are the subject of international standardization agreement (*insert the ABCA or ASCC standard number; the NATO, STANAG, NETR, or NEPR number; or appropriate documentary reference*). When revision or cancellation of this technical manual is proposed which will modify the international agreement concerned, the technical manual management activity will take appropriate action through international standardization channels, including departmental standardization offices, to change the agreement or make other appropriate accommodations."

H.5.2.1 Work package identification information **<wpidinfo>**. Work package identification information is required for this work package. (Refer to 4.7.9.3.)

H.5.2.2 Work package initial setup **<initial_setup>**. Initial setup is not required for this work package.

H.5.3 Destruction procedures introduction work package **<destruct-introwp>**. The destruction introduction work package shall contain the following information as described in H.5.3.1 through H.5.3.7.

H.5.3.1 Work package identification information **<wpidinfo>**. Work package identification information is required for this work package. (Refer to 4.7.9.3.)

Source: https://assist.dla.mil -- Downloaded: 2016-12-09T23:24Z
Check the source to verify that this is the current version before use.

H.5.3.2 Work package initial setup **<initial_setup>**. Initial setup is not required for this work package.

H.5.3.3 Authority to destroy materiel **<authorize_to_destroy>**. The following paragraph shall be included verbatim:

> "Authorization. Only division or higher commanders have the authority to order destruction of equipment. They may however, delegate this authority to subordinate commanders when the situation demands it."

H.5.3.4 Reporting destruction **<report_destruct>**. A paragraph shall be included that requires any destruction activity be reported through command channels.

H.5.3.5 General destruction information **<general_destruct_info>**. Text shall be included that provides the user with information that is generic to most destruction processes. This data shall include, but is not limited to, the following types of information:

a. Information on types of destructive processes such as burning, use of explosives, burying, or self destruction devices/techniques. This explanation shall include the advantages and disadvantages of each process.
b. For complex weapons systems, the reason to perform any subordinate destruction procedures in conjunction with those for the weapons system.
c. Any considerations relative to physical location or weather related (wind, rain, temperature) that users should consider when destroying materiel.
d. Explanations on the priority for materiel destruction. (Refer to H.4.7.)

H.5.3.6 Degree of destruction **<degree_of_destruct>**. The following information shall be included verbatim:

> "Methods of Destruction. Choose methods of destruction which will cause such damage that it will be impossible to restore the equipment to a usable condition within the combat zone.
>
> Classified Equipment. Classified equipment must be destroyed to such a degree as to prevent duplication by, or revealing means of operation or function to the enemy.
>
> Associated Classified Documents. Any classified documents, notes, instructions, or other written material pertaining to function, operation, maintenance, or employment, including drawings or parts lists, must be destroyed in a manner to render them useless to the enemy."

H.5.3.7 Essential components and spare parts **<component_spares>**. When specified by the acquiring activity, the destruction procedures may identify essential components whose destruction will incapacitate the weapons system. In certain conditions, the destruction of essential components may be used. If destruction of essential components is allowed, statements shall be included that for each weapons system, the same components will be destroyed. A similar statement shall be included that for any spare parts requiring destruction, the same essential spare parts shall be destroyed. If a weapons system determines the component parts to be essential, they should notify the components item manager so that they may identify those items for higher priority destruction in any item-level destruction procedures manual.

Source: https://assist.dla.mil -- Downloaded: 2016-12-09T23:24Z
Check the source to verify that this is the current version before use.

H.5.4 Destruction procedures work package **<destruct-materialwp>**. The destruction procedures work package shall contain the following information as described in H.5.4.1 through H.5.4.5. The destruction procedures work package shall contain only destruction procedures. All general or explanatory information shall be contained in the destruction introduction work package. (Refer to H.5.3.)

H.5.4.1 Work package identification information **<wpidinfo>**. Work package identification information is required for this work package. (Refer to 4.7.9.3.)

H.5.4.2 Work package initial setup **<initial_setup>**. Any procedure, **<proc>**, required by this work package shall include initial setup **<initial_setup>**. Initial setup requirements are found in 4.7.9.4.

H.5.4.3 Parts list **<essential_spares>**. When a weapons system TM contains a requirement to allow destruction of essential or spare parts (refer to H.5.3.7), a list of essential components and spares shall be developed and included in the work package.

H.5.4.4 Specific destruction procedures **<proc>**. The destruction procedures work package shall include specific destruction procedures for the weapons system or items (for item-level TMs). When required, specific procedures to destroy subordinate components shall be included. Specific destruction procedures for subordinate components shall not be referenced. As applicable, the order the procedures should be applied and the results of applying in the wrong order shall be included in this work package. When destruction procedures are developed, authors shall ensure the procedures use resources a soldier in the field would have readily accessible. The following methods shall be included as applicable:

a. Self-destruction options.
b. Explosive devices.
c. Improper operation.
d. Fire.
e. Mechanical devices (e.g., sledgehammers, crowbars, cranes, etc.).
f. Natural surroundings (e.g., rivers, lakes, caves, burying, hiding in vegetation, etc.).

As applicable, the procedures shall identify the points on the equipment that would be most advantageous to apply the previously described methods (e.g., where to place explosives or where to apply force with a mechanical device).

H.5.4.5 Classified equipment and documents. Special instructions for destruction of classified equipment and documents shall be provided.

H.6 **NOTES.**

The notes in section 6 apply to this appendix.

Source: https://assist.dla.mil -- Downloaded: 2016-12-09T23:24Z
Check the source to verify that this is the current version before use.

This page intentionally left blank.

Source: https://assist.dla.mil -- Downloaded: 2016-12-09T23:24Z
Check the source to verify that this is the current version before use.

APPENDIX I
BATTLE DAMAGE ASSESSMENT AND REPAIR (BDAR)

I.1 SCOPE.

I.1.1 Scope. The requirements provided in this appendix provide the technical content requirements for the preparation of BDAR procedures. This appendix covers only assessment and repair of equipment failures occurring on the battlefield. This repair is sometimes limited to such means of fixing as bypassing, patching, or jury-rigging components, or the use of alternative procedures to restore the equipment/system performance to a minimum operating condition. Fix procedures in BDAR information are for use in combat only. Standard maintenance procedures are used as soon as practicable. This appendix is a mandatory part of this standard. The information contained herein is intended for compliance.

I.2 APPLICABLE DOCUMENTS.

The applicable documents in section 2 of the basic standard apply to this appendix.

I.3 DEFINITIONS.

The definitions in section 3 of the basic manual apply to this appendix.

I.4 GENERAL REQUIREMENTS.

I.4.1 Maintenance level. Unless otherwise specified, BDAR repair functions shall be accomplished by the following maintenance levels/classes:

a. Field (Crew (operator)/AMC). Performed by crew (operator) or by a forward organizational maintenance team.
b. Field (Maintainer/ASB). Performed by maintainer or ASB, when damage exceeds service repair capability. When required repair time or tactical conditions dictate, the damaged/failed item will be recovered or evacuated as appropriate.

I.4.2 Maintenance level/class applicability. Requirements contained in this appendix are applicable to all maintenance levels/classes/ unless specifically labeled in bold and in parentheses. The labeled requirement may specify a specific level (e.g., **Field**) or a specific maintenance class (refer to 3.89) (e.g., **Maintainer** or **AMC**). The labeled requirement shall be applicable to all TMs containing that maintenance level/class. An explanation of applicable DA maintenance levels/classes is provided in section 3.

I.4.3 Preparation of digital data for electronic delivery. Data prepared and delivered digitally in accordance with this standard shall be XML tagged using the current Army DTD. Data shall be formatted for presentation using the Army style sheets. Refer to 4.6 for information on obtaining or accessing the Army DTD and style sheets. XML tags used in the DTD are noted throughout the text of this standard in bracketed, bold characters (e.g., **<descwp>**) as a convenience for the author and to ensure that the tags are used correctly when developing a document instance.

Source: https://assist.dla.mil -- Downloaded: 2016-12-09T23:24Z
Check the source to verify that this is the current version before use.

I.4.4 Use of the Document Type Definition (DTD)/style sheet. The DTD referenced in this appendix interprets the technical content and structure for the functional requirements contained in this standard. Development of the page-based TMs shall be accomplished through the use of this standard, the Army DTD, and the Army style sheets. MIL-HDBK-1222 provides further guidance and preferred style and format. The guidance in MIL-HDBK-1222 shall be followed unless it conflicts with the requirements in this standard.

I.4.5 Content structure. The examples provided herein are an accurate representation of the content structure requirements contained in this appendix and shall be followed to permit the effective use of the DTD.

I.4.6 Style and format. This standard provides style and format requirements for the technical content requirements described in this appendix. These requirements are considered mandatory and are intended for compliance.

I.4.7 Work package development. Data developed in accordance with this appendix shall be divided into work packages. These work packages should be stand alone and are broken into the following work package types: BDAR unique general information, battle damage assessment, repair, references, special or fabricated tools, expendable and durable items list, and substitute materials/part. A work package shall contain all information and references required to support the work package type.

I.4.8 Safety devices and interlocks. Information shall be prepared pertaining to the purpose and location of all safety devices and interlocks in conjunction with the pertinent procedures.

I.4.9 Electrostatic Discharge (ESD) sensitive parts. If the equipment contains ESD sensitive parts, components, or circuits; cautions and ESD labels shall be incorporated into the applicable tasks and procedures to ensure ESD sensitive parts are not damaged or degraded during maintenance and operation. Refer to 4.7.20 for requirements on labeling with ESD. Actions which could damage ESD sensitive parts, but which are not directly related to handling or operation of ESD sensitive parts, shall not be annotated with the ESD acronym, but shall be preceded by a caution statement.

I.4.10 Nuclear hardness **<hcp>**. If the weapon system/equipment has nuclear survivability requirements (e.g., overpressure and burst, thermal radiation, electromagnetic pulse, or transient radiation effects on electronics), cautions and Hardness-Critical Process (HCP) labels shall be incorporated into the applicable tasks and procedures to ensure that the hardness of the equipment is not degraded during handling or operation. Refer to 4.7.19 for requirements on labeling with HCP. Actions which could degrade hardness, but which are not directly involved in establishing nuclear hardness, shall not be annotated with the acronym, but shall be preceded by a caution statement.

I.4.11 Selective application and tailoring of content using Appendix A matrixes. This standard contains some requirements that may not be applicable to the preparation of all TMs. Selective application and tailoring of requirements contained in this standard are the responsibility of the acquiring activity and shall be accomplished using APPENDIX A. The applicability of some requirements is also designated by one of the following statements: unless specified otherwise by the acquiring activity; as specified by the acquiring activity; or when specified by the acquiring activity.

Source: https://assist.dla.mil -- Downloaded: 2016-12-09T23:24Z
Check the source to verify that this is the current version before use.

I.5 **DETAILED REQUIREMENTS.**

I.5.1 Content. When specified by the acquiring activity, a battle damage manual **<bdar>** shall be prepared. Content shall be directed to fix-forward battlefield conditions; i.e., repairs must be made as quickly as possible and to the extent necessary to restore or maintain the applicable equipment/system. A BDAR manual shall consist of front matter, **<gim>**, **<baim>**, **<brim>**, **<sim>**, and rear matter as described in I.5.2 through I.5.6.4.4. The following statement shall appear at the beginning of each work package in the BDAR manual:

> BDAR FIXES SHALL BE USED ONLY IN COMBAT OR FOR TRAINING AT THE DISCRETION OF THE COMMANDER. (AUTHORIZED TRAINING FIXES ARE LISTED IN THE BDAR TRAINING PROCEDURES WORK PACKAGE.) IN ANY CASE, DAMAGE SHALL BE REPAIRED BY STANDARD MAINTENANCE PROCEDURES AS SOON AS PRACTICABLE.

I.5.1.1 Operating procedures. Operating procedures in BDAR manuals shall be restricted to testing a system, subsystem, or component for the purpose of damage assessment or to testing after a field expedient repair has been performed. If any change to normal operating procedures is made, the new procedures to be followed shall be given.

I.5.2 Front and rear matter. The front and rear matter requirements contained in 5.2.1 and 5.2.2. shall be used.

I.5.3 General information chapter **<gim>**. A general information chapter **<gim>** shall be provided. It shall consist of a general information work package **<ginfowp>** (refer to B.5.2.) and BDAR unique general information work package **<bdar-geninfowp>** (refer to I.5.3.2.)

I.5.3.1 General information work package **<ginfowp>**. A general information work package shall be prepared IAW B.5.2. It shall contain those elements required to support all Army TMs. This may include, but is not limited to a scope (required), equipment improvement reporting, etc.

I.5.3.2 BDAR unique general information work package **<bdar-geninfowp>**. This work package shall contain information that is general in nature, but unique to a BDAR manual. It shall inform the user/reader of the purpose of the BDAR information and its relationship to user personnel, other publications, and the end item/system it supports. It shall also contain the BDAR fixes statement. (Refer to I.5.1 and FIGURE I-1.)

I.5.3.2.1 Work package identification information **<wpidinfo>**. Work package identification information is required for this work package. (Refer to 4.7.9.3.)

I.5.3.2.2 Work package initial setup **<initial_setup>**. Initial setup information is not required for this work package.

I.5.3.2.3 BDAR fixes statement. The BDAR fixes statement given in I.5.1 shall be included in this work package.

I.5.3.2.4 Standards and practices **<bdar-std-practices>**. This paragraph shall contain information pertaining to standards and practices peculiar to combat conditions. It shall include, as a minimum, the following subparagraph headings and data (expanded as applicable):

Source: https://assist.dla.mil -- Downloaded: 2016-12-09T23:24Z
Check the source to verify that this is the current version before use.

a. BDAR Characteristics. An explanation of the expediency of repair, reason for deviation from standard maintenance practices, need to take greater risks, and other characteristics specific to repair under combat conditions shall be included..

b. Waiver of precautions. A reference to deviations from normal peacetime precautions shall be included. If such deviations are summarized in another portion of the BDAR information, reference shall be made to that portion.

c. Operating characteristics. The minimum functional combat capability criteria for the applicable end item/system shall be listed.

d. Training. The explanation/rationale concerning the use of BDAR fixes for training shall be addressed. It shall list all BDAR procedures that are authorized for training. The fix (training) procedures shall be grouped by major system(s) or components(s) as they appear in the BDAR information. Each procedure shall be cross-referenced to the work package where it appears. The following statement shall be included:

"After completion of training, the end item/system shall be returned to full serviceable condition using regular repair procedures as applicable."

I.5.3.2.5 Tasks and responsibilities **<bdar-task-resp>**. This paragraph shall consist of tasks that may be required as a result of battlefield damage. The person/group responsible for each task shall be identified. The tasks shall appear in the order in which they should be performed. This information shall be presented in narrative form. This section shall include the following subparagraphs:

I.5.3.2.5.1 Tagging/identifying BDAR repairs. Instructions for identifying components affected by BDAR fixes shall be included.

I.5.3.2.5.2 Reports. Instructions for completing reports resulting from BDAR fixes shall be addressed.

I.5.3.2.6 Combat Threats **<bdar-combat-threat>** (Aviation Only). This paragraph shall consist of the description of damage from threats confronting aircraft while on combat missions from armor-piercing, armor piercing incendiary projectiles, and high-explosive incendiary projectiles. It shall also describe damage from exposure to bombs, mortars, and artillery fragments and blasts when on the ground. The resulting effects to the metal airframe structure and follow-on effects should the mission be continued shall be given. The effects of secondary damage such as cracks, crippling, or buckling and loss or damage to mechanical fasteners shall also be given. Structure damage modes shall be defined for the type of materials and structure affected.

I.5.4 Battle damage assessment chapter **<baim>**. A battle damage assessment chapter containing one or more battle damage assessment work packages **<damage-assesswp>** (refer to I.5.4.1) shall be prepared.

I.5.4.1 Battle damage assessment work package(s) **<damage-assesswp>**. Multiple battle damage assessment work packages shall be prepared. Each of these work packages shall contain an introduction and fault assessment tables. The work packages shall be organized as follows:

Source: https://assist.dla.mil -- Downloaded: 2016-12-09T23:24Z
Check the source to verify that this is the current version before use.

a. End item. These shall be a battle damage assessment work package pertaining to the overall end item or major subsystems and shall discuss the capability of the end item/subsystem to perform its mission essential functions.

b. Major functional group. Unless otherwise specified by the acquiring activity, these work packages shall be titled, arranged, and shall correspond to the functional groups as they appear in the MAC and the parts information. The total number of work packages in the BDAR information shall be determined by the number of major functional groups applicable to the equipment/system covered by the manual.

c. Auxiliary Equipment. As required, battle damage assessment work packages shall be prepared for any auxiliary equipment.

Each battle damage assessment work package shall contain the information in I.5.4.1.1 through I.5.4.1.5.

I.5.4.1.1 Work package identification information **<wpidinfo>**. Work package identification information is required for this work package. (Refer to 4.7.9.3)

I.5.4.1.2 Work package initial setup **<initial_setup>**. Initial setup information is not required for this work package.

I.5.4.1.3 BDAR fixes statement. The BDAR fixes statement given in I.5.1 shall be included in this work package.

I.5.4.1.4 Introduction **<intro>**. This paragraph shall introduce the assessment table(s) in the work package. It shall contain paragraphs that will cover the scope of the work package and application of assessment tables.

I.5.4.1.5 Fault assessment tables. This paragraph shall contain assessment tables that lead the user to a repair procedure or another chart/table that will further aid in analyzing/assessing damage. As specified by the acquiring activity, the format of the assessment tables shall be either a troubleshooting procedure or a table. (Refer to FIGURE I-2 and FIGURE I-3 for examples.) The assessment procedures shall be developed and arranged so that logical and expedient methods are used to locate trouble.

I.5.5 Battle damage repair chapter **<brim>**. One or more battle damage repair chapters **<brim>**, containing one or more battle damage repair work packages **<genrepairwp>** shall be prepared (refer to I.5.5.1).

I.5.5.1 Battle damage repair work packages **<genrepairwp>**. Unless otherwise specified by the acquiring activity, these work packages shall provide information for battlefield repair of end items, components, etc. The following types of repair work packages shall be included in the BDAR information module:

a. General repair. As required, procedures shall be provided for items that are not necessarily associated with a specific component or subsystem of the end item.

b. End item repair. Procedures for repair of the overall end item shall be provided.

Source: https://assist.dla.mil -- Downloaded: 2016-12-09T23:24Z
Check the source to verify that this is the current version before use.

c. Major functional group repair. Unless otherwise specified by the acquiring activity, these work package(s) shall be titled, arranged, and shall correspond to the functional groups as they appear in the MAC and the parts information. The total number of work packages in the BDAR repair information shall be determined by the number of major functional groups applicable to the equipment/system covered by the manual.

d. Auxiliary equipment. As required, procedures for repair of battle damage to auxiliary equipment shall be provided.

Each repair work package shall comply with the requirements contained in I.5.5.1.1 through I.5.5.1.5.

I.5.5.1.1 Work package identification information **<wpidinfo>**. Work package identification information is required for this work package. (Refer to 4.7.9.3)

I.5.5.1.2 Initial setup information **<initial_setup>**. Initial setup information is required for this work package. (Refer to 4.7.9.4.)

I.5.5.1.3 BDAR fixes statement. The BDAR fixes statement given in I.5.1 shall be included in this work package.

I.5.5.1.4 Introduction **<geninfo>**. This paragraph shall contain the following subparagraphs.

I.5.5.1.4.1 Scope. A brief statement that describes the purpose and application of the overall coverage of the work package shall be included.

I.5.5.1.4.2 Repair procedure index. A list of all procedures shall be contained in this work package. The procedures shall be listed in the order in which they appear. Procedures authorized for training and listed in the training fixes work package shall be boxed in.

I.5.5.1.5 Repair procedure **<bdar-repair-proc>**. This paragraph shall contain the repair procedure for the item(s) covered in the work package. The format and content of these paragraphs shall be as follows.

I.5.5.1.5.1 General. Remarks concerning the general nature and causes related to the damage and repair of the item shall be included. These remarks shall be brief.

I.5.5.1.5.2 Item name, trouble. The item name and the trouble shall be used as the subparagraph side head. The side head shall be followed with a general statement(s) concerning the particular type of trouble and repair to be made. Statement(s) shall be brief and as concise as possible. Subparagraphs shall be as follows.

I.5.5.1.5.2.1 Limitations **<bdar-limitation>**. This statement(s) shall identify, in relation to operational capability, the limits that would be imposed on the equipment/end item if the fix that follows is performed.

I.5.5.1.5.2.2 Personnel/time required **<bdar-persn>**. The number of personnel and time required to accomplish the fix shall be listed. Time shall be expressed in decimal point hours to the nearest one-tenth hour. An example follows:

1 soldier - 1.5 hrs

Source: https://assist.dla.mil -- Downloaded: 2016-12-09T23:24Z
Check the source to verify that this is the current version before use.

I.5.5.1.5.2.3 Materials/tools **<bdar-mtrl-tools>**. The materials and tools (peculiar) needed to make the BDAR fix shall be listed. Following each listed item shall be a reference (in parenthesis) to that work package and item number (e.g., hose (WP 0048, item 4). Reference to tools shall reference instructions for tool fabrication when applicable. Any other necessary information (such as quantities and sizes) shall be provided.

I.5.5.1.5.2.4 Procedural steps **<proc>**. Each step shall be listed numerically and placed in the sequential order in which it will be performed. Steps shall be as prescribed in 4.7.12. The last procedural step for every BDAR fix shall be: "Record BDAR action taken. When mission is complete, as soon as practical, repair the equipment/system using standard maintenance procedures."

I.5.5.1.5.3 Options. When more than one method of making the same repair/fix exists, multiple options shall be included. Options shall be listed in order of effectiveness and listed consecutively as option 1, option 2, etc. Each option provided under the item name/trouble paragraph side head shall contain the subparagraphs required by I.5.5.1.5.2. Alternatives that do not include fixes shall also be listed as options.

I.5.5.1.5.4 Item name, category. When the basic item, identified in the section title, is divided into categories or types, each specific item shall be titled and covered within a separate paragraph. Each of these paragraphs shall contain only the information that applies to that specific item. For example: Information or procedures under a heading "high pressure" shall pertain to high pressure; low pressure information/ procedures (if applicable) shall appear under the heading, "low pressure."

I.5.6 Supporting information chapter **<sim>**. A supporting information chapter containing the following work packages shall be prepared.

I.5.6.1 References work package **<refwp>**. References for the BDAR information shall be included in the references work package for the system TM. The BDAR shall not have its own references work package

I.5.6.2 Special or fabricated tools work package **<bdartoolswp>**. The special or fabricated tools work package shall consist of the following information as described in I.5.6.2.1 through I.5.6.2.4.

I.5.6.2.1 Work package identification information **<wpidinfo>**. Work package identification information is required for this work package. (Refer to 4.7.9.3)

I.5.6.2.2 Initial setup information **<initial_setup>**. Initial setup information is only required for this work package (refer to 4.7.9.4) if fabricated tools are used.

I.5.6.2.3 BDAR fixes statement. The BDAR fixes statement given in I.5.1 shall be included in this work package.

I.5.6.2.4 Content and format. This work package shall contain a list of all tools and test equipment that are required for BDAR procedures and that are not common. This list shall be prepared in accordance with the requirements for a tool identification list in G.5.8. When fabrication of tools is required for BDAR, this work package shall also contain fabrication instructions for those tools. The fabrication instructions shall be prepared in accordance with the requirements for an illustrated list of manufactured items contained in E.5.3.10.

Source: https://assist.dla.mil -- Downloaded: 2016-12-09T23:24Z
Check the source to verify that this is the current version before use.

I.5.6.3 Expendable and durable items work package **<explistwp>**. Expendable and durable items required for BDAR information shall be included in the expendable and durable items list work package for the system TM. The BDAR shall not have its own expendable and durable items list work package.

I.5.6.4 Substitute materials/parts work package **<substitute-matwp>**. The substitute materials/parts work package shall consist of the following information as described in I.5.6.4.1 through I.5.6.4.4.

I.5.6.4.1 Work package identification information **<wpidinfo>**. Work package identification information is required for this work package. (Refer to 4.7.9.3)

I.5.6.4.2 Initial setup information **<initial_setup>**. Initial setup information is not required for this work package.

I.5.6.4.3 BDAR fixes statement. The BDAR fixes statement given in I.5.1 shall be included in this work package.

I.5.6.4.4 Content. This work package shall list materials and parts that may be used for BDAR fixes. Lists or tables shall include the primary material/part, the substitute/alternate material/part, and remarks (when applicable) that identify the limitations or degradation effected by use of the substitutes. The work package shall be divided into paragraphs by material type. When paragraphs are required, the first paragraph shall be titled introduction and shall provide a general explanation of the purpose and content of the other paragraphs. When applicable, a paragraph shall be dedicated to Petroleum, Oil, and Lubricant (POL) substitutes. For example of alternate/substitute material listing, refer to FIGURE I-4. For examples of POL substitutes, refer to FIGURE I-5 and FIGURE I-6.

I.6 **NOTES.**

The notes in section 6 apply to this appendix.

Source: https://assist.dla.mil -- Downloaded: 2016-12-09T23:24Z
Check the source to verify that this is the current version before use.

TM X-XXXX-XXX-BD 0001

BDAR
INTRODUCTION

BDAR FIXES SHALL BE USED ONLY IN COMBAT OR FOR TRAINING AT THE DISCRETION OF THE COMMANDER. (AUTHORIZED TRAINING FIXES ARE LISTED IN APPENDIX E.) IN ANY CASE, DAMAGE SHALL BE REPAIRED BY STANDARD MAINTENANCE PROCEDURES AS SOON AS PRACTICABLE.

INTRODUCTION

Purpose

This Technical Manual (TM) is for use by operators, unit and Direct Support (DS) maintenance personnel. It provides procedures and guidelines for battlefield repairs on the M113 Family of Vehicles (FOV) under the forward support maintenance concept during combat.

The purpose of Battlefield Damage Assessment and Repair (BDAR) is to rapidly return disabled combat vehicles to the operation commander by expediently fixing, bypassing, or jury-rigging components to restore the minimum essential systems required for the support of the specific combat mission or to enable the tank to self-recover. These repairs may be temporary and may not restore full performance capability.

Scope

This TM describes BDAR procedures applicable specifically to M113 FOV. Expedient repairs of a general nature applicable to system or subsystem common to more than one combat vehicle, are covered in TM 9-2350-276-BD.

Many expedient repair techniques helpful in preparing a tank for recovery are included in FM 20-22, Vehicle Recovery Operations. Details of such procedures are not duplicated in the TM, although certain quick-fix battlefield operations which would, in some cases, prepare the vehicle for recovery or self-recovery will be described. Users of this manual should refer to FM 20-22 for further recovery-associated expedient repairs.

All possible types of combat damage and failure modes cannot be predicted, nor are all effective field repairs known. This TM provides guidelines for assessing and repairing battlefield failures of the 13 FOV and is not intended to be a complete catalog of all possible emergency repairs. The repairs described here serve as a guideline and are intended to stimulate the experienced mechanic to devise methods, as needed, to rapidly repair equipment in a combat crisis.

Application

The procedures in this manual are designed for battlefield environments and should be used in situations where standard maintenance procedures are impractical. These procedures are not meant to replace standard maintenance practices, but rather to supplement them strictly in a battlefield environment. Standard maintenance procedures will prov ide the most effective means of returning a damaged vehicle to ready starus provided that adequate time, replacement parts, and necessary tools are available. BDAR procedures are only authorized for use in an emergency situation in a battlefield environment, and only at the direction of the commander.

0001-1

FIGURE I-1. Example of BDAR-general information work package.

Source: https://assist.dla.mil -- Downloaded: 2016-12-09T23:24Z
Check the source to verify that this is the current version before use.

Table 1. Visual Inspection

ITEM/ACTION	FAULT ISOLATION	BDAR REFERENCE
I. Engine Visually Inspect →	Damage visible: - Evaluate extent of damage using procedures in	WP 0023, Table 1
↓ No Damage Found		
II. Fuel System Visually Inspect →	Damage visible: - Evaluate extent of damage using procedures in	WP 0024, Table 1
↓ No Damage Found		
III. Cooling System Visually Inspect →	Damage visible: - Evaluate extent of damage using procedures in	WP 0025, Table 1
↓ No Damage Found		
IV. Electrical System Visually Inspect →	Damage visible: - Evaluate extent of damage using procedures in	WP 0026, Table 1
↓ No Damage Found		

FIGURE I-2. <u>Example of BDAR assessment flowchart diagram.</u>

Source: https://assist.dla.mil -- Downloaded: 2016-12-09T23:24Z
Check the source to verify that this is the current version before use.

How to use the fault assessment tables:

a. A fault assessment table is organized so the user can quickly assess a particular system or capability by asking a series of questions.

b. First, ask a question. Your response will be either a “yes” or “no”. If it is “yes”, then you have no problem so go to the next question.

c. If it is “no”, then proceed to the work package listed.

Table 1. Mobility

Does engine start/run?	If no go to WP 0032
Does tank move in “D” and “R”?	If no go to WP 0033
Are the track and suspension intact?	If no go to WP 0034 for track repair Or go to WP 0035 for suspension repair
Does tank steer/pivot?	If no go to WP 0036
Does tank brake?	If no go to WP 0037
Does tank have full power	If no go to WP 0038

FIGURE I-3. Example of BDAR assessment table.

Source: https://assist.dla.mil -- Downloaded: 2016-12-09T23:24Z
Check the source to verify that this is the current version before use.

Table 1. Hull Spares and Repair Parts

Parts		Applies To		From Weapons System					
NSN	Description	M1 (PM)	M1A1	M2 M3 Tank	M34 A2 Track	M48 A5 Famil	M60 Famil	M88 Famil	M109 Veh
5935-00-001-7325	Connector Plug	X	X	X					
5315-00-014-1283	Pin, Straight, Headless	X	X			X	X		
2530-00-015-2774	Spacer, Hub Track	X	X	X		X	X	X	X
4730-00-018-9566	Plug, Pipe	X	X	X		X	X	X	X
4730-00-050-4203	Fitting, Lubrication	X	X			X	X		
4730-00-050-4208	Fitting, Lubrication	X	X			X	X		
5340-00-057-3537	Clevis, Road End	X	X			X	X		
2530-01-201-4816	Roadwheel Assembly	X	X				X	X	
4730-00-080-9847	Adaptor, Straight	X	X			X	X	X	X
5340-00-088-4254	Clamp, Loop	X	X			X	X		
5340-00-088-6655	Clamp, Loop	X	X			X	X		
2920-00-088-8613		X	X				X		

FIGURE I-4. Example of substitute materials/parts.

Source: https://assist.dla.mil -- Downloaded: 2016-12-09T23:24Z
Check the source to verify that this is the current version before use.

Table 2. Substitute Lubricants and Hydraulic Fluids

Primary				Alternate		Expedient	Notes
Lubrication Point	Temperature Range	Military Specifications	NATO Product	US or NATO Equivalent	Soviet		
Gun Bore	Above 32°F +40°F/65°F	(PL-M) MIL-L-3150 PL-S VV-L-800	02-192 0-190				Not BDAR critical
Bore Evacuator	Above 32°F +40°F/65°F	(PL-M) MIL-L-3150 PL-S VV-L-800	0-192 0-190	OE/HDO-10 MIL-L-2104 OEA, MIL-G-46167			
Breech Block	Above 32°F +40°F/65°F	(PL-M) MIL-L-3150 PL-S VV-L-800	0-192 0-190	Any MIL-L-2104 OEA, MIL-G-46167			
Grenade Dischargers	Above 32°F +40°F/65°F	(PL-M) MIL-L-3150 PL-S VV-L-800	0-192 0-190	Any MIL-L-2104 OEA, MIL-G-46167			Not BDAR critical

FIGURE I-5. <u>Example of substitute lubricants and hydraulic fluids.</u>

Source: https://assist.dla.mil -- Downloaded: 2016-12-09T23:24Z
Check the source to verify that this is the current version before use.

Table 3. Substitute Fuels for Diesel Fuel W-F-800, DF-1, and NATO-F-54

Primary Fuel	Alternate Fuel	Expedient Fuel	Military Specification	Commercial Specification
Diesel Fuel VV-F-800 DF-1 NATO-F-54	See Below	See Below	X	
	*Automotive Diesel: ASTM-D-975 (1-D and 2-D)			X
	Kerosene: ASTM-D-3699			X
	Fuel Oil: ASTM-D-396 (Numbers 1 and 2)			X
	Distillate: NATO-F-75 (Low pour point)		X	
	Kerosene: NATO-F-5B		X	
	Aviation Turbine: MIL-T-5624 (JP4 and JP5) NATO-F-40		X	X

FIGURE I-6. <u>Example of substitute fuels.</u>

Source: https://assist.dla.mil -- Downloaded: 2016-12-09T23:24Z
Check the source to verify that this is the current version before use.

APPENDIX J
PREVENTIVE MAINTENANCE CHECKLIST (PMC)

J.1 SCOPE.

J.1.1 Scope. This appendix contains detailed requirements for the preparation of a page-based operator's pocket-size Preventive Maintenance Checklist (PMC) for major weapon systems and their related systems, subsystems, equipment, assemblies, components, SRUs, and LRUs. This appendix is a mandatory part of the standard. The information contained herein is intended for compliance. The requirements are applicable for all maintenance levels/classes through overhaul (depot), including DMWRs and NMWRs.

J.2 APPLICABLE DOCUMENTS.

The applicable documents in section 2 apply to this appendix.

J.3 DEFINITIONS.

The definitions in section 3 apply to this appendix.

J.4 GENERAL REQUIREMENTS.

J.4.1 General. The requirements provided in this appendix provide the technical content requirements for PMC.

J.4.2 Development of a Preventive Maintenance Checklist (PMC). A PMC **<pmc>** shall be prepared when specified by the acquiring activity. The acquiring activity shall specify those inspection intervals for the PMC using those intervals as stated in E.5.3.4.2.3.1.2. (Refer to J.6.1.)

J.4.3 Preparation of digital data for electronic delivery. Data prepared and delivered digitally in accordance with this standard shall be XML tagged using the current Army DTD. Data shall be formatted for presentation using the Army style sheets. Refer to 4.6 for information on obtaining or accessing the Army DTD and style sheets. XML tags used in the DTD are noted throughout the text of this standard in bracketed, bold characters (e.g., **<descwp>**) as a convenience for the author and to ensure that the tags are used correctly when developing a document instance.

J.4.4 Use of Document Type Definition (DTD)/style sheet. The DTD referenced in this appendix interprets the technical content and structure for the functional requirements contained in this standard. Development of the page-based TMs shall be accomplished through the use of this standard, the Army DTD, and the Army style sheets. MIL-HDBK-1222 provides further guidance and preferred style and format. The guidance in MIL-HDBK-1222 shall be followed unless it conflicts with the requirements in this standard.

J.4.5 Content structure. The examples provided herein are an accurate representation of the content structure requirements contained in this appendix and shall be followed to permit the effective use of the DTD.

J.4.6 Style and format. This standard provides style and format requirements for the technical content requirements described in this appendix. These requirements are considered mandatory and are intended for compliance.

Source: https://assist.dla.mil -- Downloaded: 2016-12-09T23:24Z
Check the source to verify that this is the current version before use.

J.4.7 Preventive Maintenance Checklist (PMC) numbering. The PMC shall use the same basic TM identification number as the operator or field level maintenance manual from which the preventive maintenance checks and services were extracted. A "-PMC" suffix shall be added to the basic TM number. (Refer to FIGURE J-1.)

J.4.8 National Stock Numbers (NSNs) and Part Numbers (P/Ns). NSNs shall not be used in procedural steps in the PMC. P/Ns shall not be used in procedural steps except when absolutely necessary for identification.

J.4.9 Illustrations. Illustrations may be used in the PMC.

J.4.10 Selective application and tailoring of content using Appendix A matrixes. This standard contains some requirements that may not be applicable to the preparation of all PMCs. Selective application and tailoring of requirements contained in this standard are the responsibility of the acquiring activity and shall be accomplished using APPENDIX A. The applicability of some requirements is also designated by one of the following statements: unless specified otherwise by the acquiring activity; as specified by the acquiring activity; or when specified by the acquiring activity.

J.5 **DETAILED REQUIREMENTS.**

J.5.1 Basic content. The PMC shall consist of front matter, a PMCS introduction work package, one or more PMCS work packages, and rear matter as described in J.5.2 through J.5.5 below.

J.5.2 Front matter. A PMC manual shall contain the following front matter as required:

J.5.2.1 Front cover **`<frntcover_abbreviated>`**. The PMC shall include an abbreviated front cover (refer to 5.2.1.2) and shall include a usage note on the cover as prescribed in J.5.2.1.1. Refer to FIGURE J-1.

J.5.2.1.1 Usage note and reporting errors and recommending improvements statement **`<reporting>`**. The following usage statement shall appear on the cover page of the PMC above the Reporting Errors and Recommending Improvements statement. The below abbreviate Reporting Errors and Recommending Improvements statement shall be used in lieu of the standard statement found in 5.2.1.7.1 Italicized text within parentheses shall be replaced with the appropriate information (refer to FIGURE J-1):

"**NOTICE**

To effectively perform the procedures in this checklist, you must be experienced in using the preventive maintenance checks and services (PMCS) table in Technical Manual (TM) (*insert the TM number*). The checklist item numbers match those in the PMCS table in the TM.

REPORTING ERRORS AND RECOMMENDING IMPROVEMENTS

You can help improve this publication. If you find any errors, or if you know of a way to improve this publication, please let us know. Mail your letters or DA Form 2028-2 (Recommended Changes to Publications and Blank Forms) directly to: (*the address of proponent*). A reply will be sent to you."

J.5.2.2 Warning summary **`<warnsum>`**. If applicable, a warning summary may be included in the PMC. Refer to 5.2.1.4.

Source: https://assist.dla.mil -- Downloaded: 2016-12-09T23:24Z
Check the source to verify that this is the current version before use.

J.5.3 PMCS introduction work package **<pmcsintrowp>**. A PMCS introduction work package shall be prepared in accordance with E.5.3.4.1.

J.5.4 PMCS work packages **<pmcswp>**. The PMC shall contain one or more PMCS work packages containing all items and intervals for the maintenance level(s) as specified by the acquiring activity. The specified inspections shall be taken directly from the applicable PMCS table (refer to E.5.3.4.2) in the operator or field level manual containing the inspection. Item numbers in the checklist shall be the same as those assigned to the procedures in the operator or field level maintenance PMCS table.

J.5.5 Rear matter **<rear>**. Rear matter shall be prepared in accordance with 5.2.2.

J.6 **NOTES.**
(This section contains information of a general or explanatory nature that may be helpful, but is not mandatory.)

J.6.1 Acquisition requirements. The acquiring activity should specify the inspection intervals to be included in the PMC. (Refer to J.4.2.)

Source: https://assist.dla.mil -- Downloaded: 2016-12-09T23:24Z
Check the source to verify that this is the current version before use.

TM 9-2350-XXX-10-PMC

CREW (OPERATOR)
DAILY PREVENTIVE
MAINTENANCE CHECKLIST
FOR
FIGHTING VEHICLE, INFANTRY
XYZ AND XYZ2

NOTICE

To effectively perform the procedures in this checklist, you must be experienced in using the PMCS table in TM 9-2350-XXX-10-1. The item numbers in this checklist are the same as those in the PMCS tables.

REPORTING ERRORS AND RECOMMENDING IMPROVEMENTS

You can help improve this publication. If you find any errors, or if you know of a way to improve this publication, please let us know. Mail your letters or DA Form 2028 (Recommended Changes to Publications and Blank Forms) directly to: (the address of proponent). A reply will be sent to you.

DISTRIBUTION STATEMENT A: Approved for public release; distribution is unlimited.

HEADQUARTERS, DEPARTMENT OF THE ARMY
29 SEPTEMBER 1989

FIGURE J-1. Example PMC cover page.

Source: https://assist.dla.mil -- Downloaded: 2016-12-09T23:24Z
Check the source to verify that this is the current version before use.

APPENDIX K
LUBRICATION ORDERS

K.1 SCOPE.

K.1.1 Scope. This appendix establishes the technical content requirements for the preparation of stand-alone Lubrication Orders (LOs) for major weapon systems and their related systems, subsystems, equipment, assemblies, components, SRUs, and LRUs. This appendix is a mandatory part of this standard. The information contained herein is intended for compliance. The requirements are applicable for all maintenance levels/classes through overhaul (depot) including DMWRs and NMWRs.

K.2 APPLICABLE DOCUMENTS.

The applicable documents in section 2 apply to this appendix.

K.3 DEFINITIONS.

The definitions in section 3 apply to this appendix.

K.4 GENERAL REQUIREMENTS.

K.4.1 General. The requirements provided in this appendix provide the technical content requirements for the LOs.

K.4.2 Development of lubrication instructions. Lubrication instructions shall be prepared for all equipment, except aircraft, that require lubrication. These lubrication instructions shall be prepared as a stand-alone work card except in the following cases:

a. When specified by the acquiring activity, the lubrication instructions may be included in the PMCS work package or as a lubrication work package. (Refer to E.5.3.4.)
b. When the lubrication procedures are classified, the lubrication instructions shall be included in the PMCS or a lubrication work package that is classified to at least the classification level of the instructions or higher. Classified instructions shall be marked and handled as specified in the current security regulations.

K.4.3 Preparation of digital data for electronic delivery. Data prepared and delivered digitally in accordance with this standard shall be XML tagged using the current Army DTD. Data shall be formatted for presentation using the Army style sheets. Refer to 4.6 for information on obtaining or accessing the Army DTD and style sheets. XML tags used in the DTD are noted throughout the text of this standard in bracketed, bold characters (e.g., **<descwp>**) as a convenience for the author and to ensure that the tags are used correctly when developing a document instance.

K.4.4 Use of Document Type Definition (DTD)/style sheet. The DTD referenced in this appendix interprets the technical content and structure for the functional requirements contained in this standard. Development of the page-based TMs shall be accomplished through the use of this standard, the Army DTD, and the Army style sheets. MIL-HDBK-1222 provides further guidance and preferred style and format. The guidance in MIL-HDBK-1222 shall be followed unless it conflicts with the requirements in this standard.

Source: https://assist.dla.mil -- Downloaded: 2016-12-09T23:24Z
Check the source to verify that this is the current version before use.

K.4.5 Content structure. The examples provided herein are an accurate representation of the content structure requirements contained in this appendix and shall be followed to permit the effective use of the DTD for LOs.

K.4.6 Style and format. This standard provides style and format requirements for the technical content requirements described in this appendix. These requirements are considered mandatory and are intended for compliance.

K.4.7 Work package development. Data developed in accordance with this appendix shall be divided into work packages. These work packages should be stand alone and are broken into the following work package types: lubrication. A work package shall contain all information and references required to support the work package type.

K.4.8 Warnings, cautions, and notes. Warnings, cautions, and notes shall be applied in accordance with 4.7.7.

K.4.9 Illustrations. Illustrations may be used in the LO.

K.4.9.1 Single illustrations. Illustrations shall be used to show the location of grease fittings and shall indicate the number of grease points (when applicable). A minimum number of illustrations shall be used. Foldouts shall not be used in lubrication orders.

K.4.9.2 Multiple illustrations. When it is necessary to provide multiple numbers of illustrations to show separate component parts, each illustration shall have an individual title.

K.4.10 Safety devices and interlocks. Information shall be prepared pertaining to the purpose and location of all safety devices and interlocks in conjunction with the pertinent procedures.

K.4.11 Electrostatic Discharge (ESD) sensitive parts. If the equipment contains ESD sensitive parts, components, or circuits, cautions and ESD labels shall be incorporated into the applicable tasks and procedures to ensure ESD sensitive parts are not damaged or degraded during maintenance and operation. (Refer to 4.7.20 for requirements on labeling with ESD.) Actions which could damage ESD sensitive parts, but which are not directly related to handling or operation of ESD sensitive parts, shall not be annotated with the ESD acronym, but shall be preceded by a caution statement.

K.4.12 Selective application and tailoring of content using Appendix A matrixes. This standard contains some requirements that may not be applicable to the preparation of all TMs. Selective application and tailoring of requirements contained in this standard are the responsibility of the acquiring .activity and shall be accomplished using APPENDIX A. The applicability of some requirements is also designated by one of the following statements: unless specified otherwise by the acquiring activity; as specified by the acquiring activity; or when specified by the acquiring activity.

K.5 **DETAILED REQUIREMENTS.**

K.5.1 Lubrication Order (LO) **<lubeorder>**.

K.5.1.1 General requirements. LOs shall comply with the following general requirements:

K.5.1.1.1 LO format. LOs shall be prepared in either log book or standard page size. (Refer to TABLE I.)

Source: https://assist.dla.mil -- Downloaded: 2016-12-09T23:24Z
Check the source to verify that this is the current version before use.

K.5.1.1.2 LO number. The LO number shall appear on the cover page in accordance with K.5.2.1. The LO number shall appear at the top of all the other pages in the LO.

K.5.1.1.3 Lubrication interval symbols. Unless otherwise specified by the acquiring activity, the lubrication interval symbols in TABLE K-I shall be used:

TABLE K-I. Lubrication intervals.

Symbol	Definition
D	Daily
W	Weekly
M	Monthly
Q	Quarterly
S	Semiannually
A	Annually
B	Biennially
H	Hours (operated)
MI	Miles (operated)
KM	Kilometers (operated)
RDS	Rounds (fired)
OC	On Condition
MRA	Maintenance Repair Action

K.5.1.1.4 Measurements. Unless otherwise specified by the acquiring activity, all measurements expressed in the text, in tables, or in illustrations shall be expressed in both U.S. standard units and metric units. The order shall be in accordance with equipment markings

K.5.2 LO front matter. LO front matter shall consist of an abbreviated cover.

K.5.2.1 Cover **<frntcover_abbreviated>**. The cover shall contain the heading, title, NSN, part number, CAGEC, the EIC, a reference line, reporting errors information, supersedure notice (revisions only), distribution statement/export control warning/destruction notice, LO statement, service nomenclature, and date. Refer to FIGURE K-1

K.5.2.1.1 Heading. The heading shall consist of the LO number centered at the top of the cover and the words "LUBRICATION ORDER" centered below the LO number formatted as shown in FIGURE K-1

K.5.2.1.2 Title **<tmtitle>**. The title shall appear below the heading and read the same as the title on the related TM. When more than one piece of equipment is covered by the LO, the title for each shall appear separately.

K.5.2.1.3 National Stock Number (NSN), part number, Commercial and Government Entity Code (CAGEC), and End Item Code (EIC). The applicable NSNs, part numbers, CAGECs, and EICs for each piece of equipment covered by the LO shall be entered beneath the title(s).

K.5.2.1.4 Reference line **<lube-refs>**. A reference line consisting of the publication number(s) of the related TMs shall be placed below the title within the applicable area.

Source: https://assist.dla.mil -- Downloaded: 2016-12-09T23:24Z
Check the source to verify that this is the current version before use.

K.5.2.1.5 Reporting errors **<reporting>**. LO cover shall contain a Reporting Errors and Recommending Improvements Statement. Refer to 5.2.1.7.1.

K.5.2.1.6 Supersedure notice **<supersedure>**. For revised LOs, a supersedure notice shall be included on the cover as shown in FIGURE K-1

K.5.2.1.7 Distribution statement, export control warning, and destruction notice **<notices>**. A distribution statement and, when required, an export control warning and destruction notice shall be placed on the first card. Requirements for these notices are contained in 5.2.1.1.9 through 5.2.1.1.11 and in DODI 5230.24.

K.5.2.1.8 Lubrication order (LO) statement **<general_purpose_notices>**. The following statement shall be included on the title page of the LO:

> "A copy of this lubrication order will remain with the equipment at all times; instructions contained herein are mandatory."

K.5.2.1.9 Service nomenclature **<servnomen>**. The LO cover shall include the service or acquiring activity's nomenclature as shown in FIGURE K-1

K.5.2.1.10 LO date **<date>**. The LO cover shall include the date of the LO at the bottom.

K.5.3 LO introduction work package **<lointrowp>**. The LO introduction work package shall contain the information in K.5.3.1 through K.5.3.3 as applicable.

K.5.3.1 Work package identification information **<wpidinfo>**. Work package identification information is required for this work package. (Refer to 4.7.9.3.)

K.5.3.2 Work package initial setup **<initial_setup>**. Initial setup is not required for this work package.

K.5.3.3 LO introduction contents. The LO introduction shall contain the statements/information as prescribed in K.5.3.3.1 through K.5.3.3.4 below as applicable.

K.5.3.3.1 General statement(s)/notes.

K.5.3.3.1.1 General note placement. General statement(s)/notes shall be placed in the LO introduction work package and are applicable to the overall understanding of requirements of the LO procedures. **TEXT DELETED**

K.5.3.3.1.2 General note content. The statement(s) shall include such information as adherence to lubrication intervals, explanation of interval symbols, maintenance levels/classes, exceptional operational requirements, abbreviations, fittings, and parts cleaning. A statement concerning corrosion control shall be used as applicable. The statement shall provide instructions or reference corrosion control requirements provided in the applicable narrative TM. (Refer to FIGURE K-2 for an example.)

K.5.3.3.2 Oil filter statement. As applicable, a statement similar to the following shall be included:

> "Oil filters shall be serviced/cleaned/changed as applicable, when:
>
> a. They are known to be contaminated, or clogged,
> b. Service is recommended by Army Oil Analysis Program (AOAP) laboratory analysis, or

Source: https://assist.dla.mil -- Downloaded: 2016-12-09T23:24Z
Check the source to verify that this is the current version before use.

c. At prescribed hardtime maintenance intervals."

K.5.3.3.3 Army Oil Analysis Program (AOAP) statements. One of the following statements shall be included for all equipment falling under the AOAP.

K.5.3.3.3.1 Army Oil Analysis Program (AOAP) sampling interval statement. A statement similar to the following shall be included:

"Engine oil/transmission oil/hydraulic fluids must be sampled at (*insert applicable hour/mileage time frame*) as prescribed by (*insert DA PAM 750-8 or DA PAM 738-751).”*

K.5.3.3.3.2 Army Oil Analysis Program (AOAP) not available/non-enrolled statement. When a component/equipment is not enrolled in the AOAP, or oil analysis support is not available, a statement similar to the following shall be used:

"This (*enter name of component/equipment*) is not enrolled in the Army Oil Analysis Program. HARDTIME MAINTENANCE INTERVALS APPLY."

K.5.3.3.4 Warranty hardtime statement. When applicable, the following statement shall be used:

"For equipment under manufacturer's warranty, hardtime oil service intervals shall be followed. Intervals shall be shortened if lubricants are known to be contaminated or if operation is under adverse conditions such as longer than usual operating hours, extended idling periods, extreme dust, etc."

K.5.4 Lubrication procedures work package **<lubewp>**. One or more lubrication procedures work packages shall be prepared (refer to E.5.3.8) and shall include all applications, procedures, authorized lubricants, intervals, man-hour requirements, lubrication points, and AOAP requirements. Unless otherwise specified by the contracting activity, the lubrication procedures shall be presented in grouped sequence by interval to enable the user to receive, lubricate, and return to an acceptable performance standard all components of the equipment in a minimum amount of time with the skills, tools, test equipment, and spare parts authorized by the LPD or the MAC. Unless otherwise specified by the contracting activity, lubrication procedures shall be based upon the principles of RCM logic. Any other maintenance procedures from the related maintenance TM that are required for the LO may be included in the LO only if the information is less than two pages. If the information is more than two pages, a reference to the maintenance TM shall be included in the LO

K.5.4.1 Work package identification information **<wpidinfo>**. Work package identification information is required for this work package. (Refer to 4.7.9.3.)

K.5.4.2 Work package initial setup **<initial_setup>**. Initial setup is required for this work package. (Refer to 4.7.9.4.)

K.5.4.3 Grouped lubrication points. When grouped lubrication points require the same lubricant at the same interval, the type and number of points shall be identified and described by one of the following methods:

a. Multi-headed, solid-shafted arrows shall point to each of the lubrication points. (Refer to FIGURE K-3)
b. Lubrication point notes shall provide instructions for applying lubricants, taking into account the following factors:

Source: https://assist.dla.mil -- Downloaded: 2016-12-09T23:24Z
Check the source to verify that this is the current version before use.

(1) Type, grade, availability, and properties of prescribed lubricant.

(2) Expected temperature.

(3) Lubrication gun and tools available to authorized maintenance level.

(4) Types of lubrication fittings.

(5) Possible ill effects of excessive or insufficient lubrication.

Caution shall be stressed where over or under lubrication of a part will damage that part or closely associated parts. Such cautionary notes shall either be included as a portion of the point note or as a special note. (Refer to K.5.5.3.)

K.5.4.4 Washing and natural drying. If applicable, instructions shall be given for washing and natural drying of finely machined and dirt-sensitive parts before relubricating. Use of compressed air jets or temperatures above 212 degrees Fahrenheit shall not be prescribed.

K.5.4.5 Preservation information. If preservation procedures are required for the LO, reference shall be made to the related maintenance TM containing preservation procedures. Any special preservation procedures needed for the LO that are not covered in the related maintenance TM may be included in the LO.

K.5.5 LO Supporting Information **<sim>**. The LO supporting information shall contain the information contained in K.5.5.1 through K.5.5.3 below as applicable.

K.5.5.1 Lubricants and military symbols work package **<lubricantsymbolswp>**. The lubricants and military symbols work package shall contain the information in K.5.5.1.1 through K.5.5.1.3 below.

K.5.5.1.1 Work package identification information **<wpidinfo>**. Work package identification information is required for this work package. (Refer to 4.7.9.3.)

K.5.5.1.2 Work package initial setup **<initial_setup>**. Initial setup is not required for this work package.

K.5.5.1.3 Lubricants and military symbols. Unless otherwise specified by the acquiring activity, lubricants shall be identified by standard military symbols, in accordance with MIL-HDBK-113 and MIL-HDBK-275. (Refer to FIGURE K-3) The lubricant symbols and interval symbols shall be contained in a table. These columns shall be headed by the words "LUBRICANT" and "INTERVAL." Those lubrication points that are serviced or lubricated by checking the level, replenishing the lubricant, or draining and refilling shall be indicated by the lubricant's symbol at the point on the illustration that is designated for replenishing or refilling. The amount of lubricant required shall be given either in the point note or in the "Capacity" column of the table, if applicable.

Source: https://assist.dla.mil -- Downloaded: 2016-12-09T23:24Z
Check the source to verify that this is the current version before use.

K.5.5.2 Lubricant types work package **<lubetypeswp>**. The lubricant types work package shall contain the information in K.5.5.2.1 through K.5.5.2.3 below.

K.5.5.2.1 Work package identification information **<wpidinfo>**. Work package identification information is required for this work package. (Refer to 4.7.9.3.)

K.5.5.2.2 Work package initial setup **<initial_setup>**. Initial setup is not required for this work package.

K.5.5.2.3 Lubricant table. As applicable, this work package shall contain table(s) to provide information needed to select the proper lubricant for various temperature ranges and uses. The size and location of the table(s) shall be tailored to meet layout requirements and shall include as applicable, information on temperature range, lubricant, military symbol, NATO code, specification, NSN, capacity, interval between service, and man-hours required to complete all service by type stated to the nearest tenth for all lubricants prescribed by the LO. (Refer to FIGURE K-4 for an example.)

K.5.5.2.3.1 Notes to tables. As necessary, when specific restrictions, preferred grades, and other conditions exist, notes shall be annotated on tables in accordance with 4.7.13.4. For example: 1/"When MIL-PRF-2104 lubricant is authorized, use 15W-40 (OE/HDO-15/40) when available and the applicable temperature range exists," or 2/"15W-40 oil is not authorized in this particular (*enter component name*)." Where applicable, the statement "For Arctic Operation, refer to TM 4-33.31" shall be included as a note.

K.5.5.3 Special notes work package **<lospecnoteswp>**. The special notes work package shall contain the information in K.5.5.3.1 through K.5.5.3.3 below.

K.5.5.3.1 Work package identification information **<wpidinfo>**. Work package identification information is required for this work package. (Refer to 4.7.9.3.)

K.5.5.3.2 Work package initial setup **<initial_setup>**. Initial setup is not required for this work package.

K.5.5.3.3 Special notes. The special notes work package shall contain the special notes in K.5.5.3.3.1 through K.5.5.3.3.2 as applicable.

K.5.5.3.3.1 Pertinent lubrication point information. As applicable, additional pertinent lubrication point information shall be incorporated into the LO. When applicable, the LO shall contain a special note referencing, but not repeating, instructions in TMs.

K.5.5.3.3.2 Effect of extreme conditions. If applicable, pertinent instructions relevant to the effect of extreme conditions such as temperature, humidity, or altitude on lubrication requirements for the equipment shall be included as a special note.

K.5.6 Lubrication order rear matter **<lubeorder_rear>**.

K.5.6.1 Reporting errors and recommending improvements DA Form 2028 **<da2028>**. DA Form 2028 shall be included in 5.2.3.3.

K.5.6.2 Authentication block **<authent>**. An authentication block, provided by the acquiring activity, shall be included in the LO. Distribution information, as applicable, shall be placed below the authentication block.

Source: https://assist.dla.mil -- Downloaded: 2016-12-09T23:24Z
Check the source to verify that this is the current version before use.

K.5.6.3 Back cover **<back>**. The lubrication order shall contain a back cover as specified in 5.2.2.6 which will contain the PIN.

K.6 **NOTES.**

The notes in section 6 apply to this appendix.

Source: https://assist.dla.mil -- Downloaded: 2016-12-09T23:24Z
Check the source to verify that this is the current version before use.

LO X-XXXX-XXX-X

LUBRICATION ORDER
TITLE
NSN
PART NUMBER
CAGEC
EIC

References: TM X-XXXX-XXX-10, TM X-XXXX-XXX-20, LO X-XXXX-XXX-XX, AND FM X-XXX

REPORTING OF ERRORS

You can help improve this LO. If you find any mistakes or if you know of a way to improve the procedures, please let us know. Mail your letter, DA Form 2028 (Recommended Changes to Publications and Blank Forms) directly to: (*Insert name and address of proponent*.) You may also send your recommended changes via electronic mail or by fax. Our fax number is (*insert DSN and commercial number of proponent*). Our email address is (*insert email address of proponent*). A reply will be furnished to you.

SUPERSEDURE NOTICE: This LO supersedes LO X-XXXX-XXX-X, dated 5 Oct 03.

DISTRIBUTION STATEMENT C: Distribution authorized to U.S. government agencies and their contractors. This publication is Administrative-Operational Use required for administrative and operational purposes, as determined on (*insert date*). Other request for this document must be referred to (*insert name and address of proponent.*)

WARNING: This document contains technical data whose export is restricted by the Arms Export Control Act (Title 22, U.S.C., Sec 2751, et. seq.) or the Export Administration Act of 1979 (Title 50, U.S.C., App. 2401, et. seq.) as amended. Violations of these export laws are subject to severe criminal penalties. Disseminate in accordance with provisions of DOD Directive 5230.25.

DESTRUCTION NOTICE: Destroy by any method that will prevent disclosure of the contents or reconstruction of the document.

GENERAL NOTICE: Copy of this lubrication order will remain with the equipment at all times; instructions contained herein are mandatory.

SERVICE NOMENCLATURE
LO DATE

FIGURE K-1. Example of LO cover.

Source: https://assist.dla.mil -- Downloaded: 2016-12-09T23:24Z
Check the source to verify that this is the current version before use.

NOTES:

This LO is for crew (C) maintenance. Lube intervals (on-condition or hardtime) are based on normal operation. Lube more during constant use, and less during inactive periods. Use correct grade of lubricant for seasonal temperature expected.

On the picture, a dash line (--) means lube points on both sides.

Clean parts with dry solvent (SD), type II, or equivalent. Use cleaning compound solvent (RBC) on powder-fouled parts. Dry before lubricating. DO NOT use fluid or semi-fluid lubricant on SFD lubricated surface. Wipe surfaces dry.

Before you start your lube service.

ALWAYS	NEVER
a. Clean grease fittings before lubrication.	a. Use wrong type/grade grease.
b. Use the lubrication order as your guide.	b. Use too much lubricant.

FIGURE K-2. Example of general statements/notes.

Source: https://assist.dla.mil -- Downloaded: 2016-12-09T23:24Z
Check the source to verify that this is the current version before use.

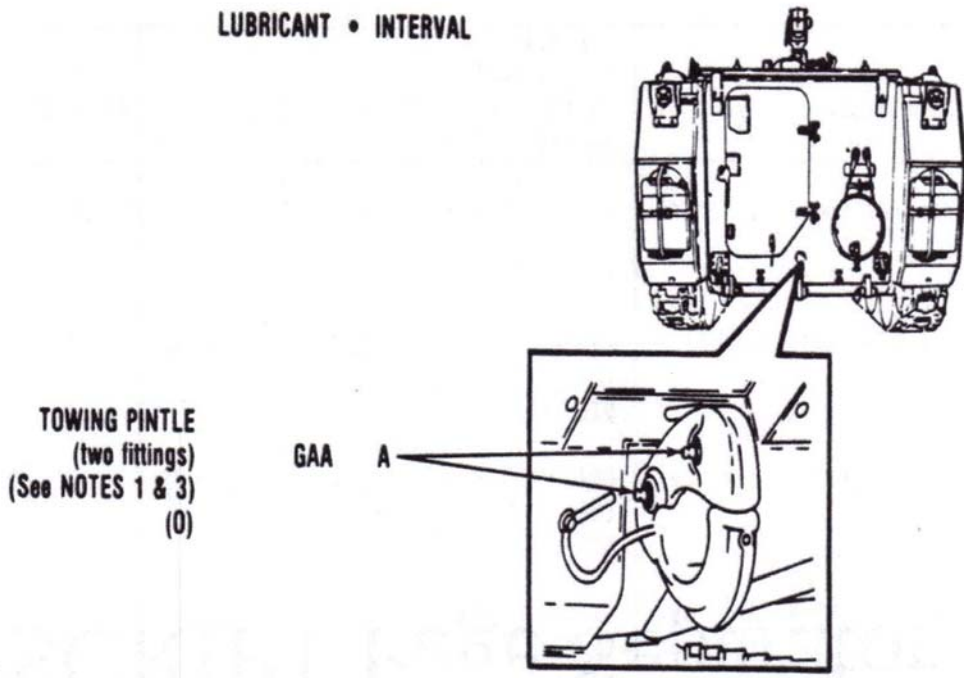

FIGURE K-3. <u>Example – identification of lubricant symbol and lubrication points, interval, and note.</u>

Source: https://assist.dla.mil -- Downloaded: 2016-12-09T23:24Z
Check the source to verify that this is the current version before use.

TABLE I. Lubricant Table for Engine XXC

Temperature Range	Lubricant Mil. Symbol (NATO Code) Specification	Capacity	Interval	Man-hour
-18°C to +49°C (zero to +120°F)	OE/HDO 14/40 (0-1236) MIL-PRF-2104	5 QTS	200 MI	.5
-25°C to +40°C (-15°F to +40°F)	OE/HDO 10 (0-237) MIL-PRF-2104	5 QTS	200 MI	.5
-10°C to +49°C (+15°F to +120°F)	OE/HDO 30 (0-238) MIL-PRF-2104	5 QTS	200 MI	.5
-05°C to +49°C (+25°F to +120°F)	OE/HDO 40 (NA) MIL-PRF-2104	5 QTS	200 MI	.5
-57°C to +04°C (-70°F to +40°F)	OEA (D-183) MIL-PRF-2104	5 QTS	100 MI	.5

FIGURE K-4. Example of lubricant table.

Source: https://assist.dla.mil -- Downloaded: 2016-12-09T23:24Z
Check the source to verify that this is the current version before use.

APPENDIX L
MAINTENANCE OR DEMILITARIZATION OF AMMUNITION PROCEDURES

L.1 **SCOPE.**

L.1.1 Scope. This appendix establishes the technical content requirements for the preparation of DMWRs for the maintenance or demilitarization of ammunition, hereafter referred to as ammunition for major weapon systems and their related systems, subsystems, equipment, assemblies, components, SRUs, and LRUs. This appendix is a mandatory part of this standard. The information contained herein is intended for compliance.

L.2 **APPLICABLE DOCUMENTS.**

The applicable documents in section 2 of the basic standard apply to this appendix.

L.3 **DEFINITIONS.**

The definitions in section 3 of the basic standard apply to this appendix.

L.4 **GENERAL REQUIREMENTS.**

L.4.1 General. The requirements provided in this appendix provide the technical content requirements for the maintenance or demilitarization of ammunition.

L.4.2 Development of maintenance or demilitarization instructions. Maintenance or demilitarization instructions shall cover all items comprising the ammunition. Tasks shall be presented in the order in which they are performed. Procedures shall refer to specific maintenance tasks or demilitarization tasks to complete the tasks.

L.4.3 Preparation of digital data for electronic delivery. Data prepared and delivered digitally in accordance with this standard shall be XML tagged using the current Army DTD. Data shall be formatted for presentation using the Army style sheets. Refer to 4.6 for information on obtaining or accessing the Army DTD and style sheets. XML tags used in the DTD are noted throughout the text of this standard in bracketed, bold characters (e.g., **<descwp>**) as a convenience for the author and to ensure that the tags are used correctly when developing a document instance.

L.4.4 Use of Document Type Definition (DTD)/style sheet. The DTD referenced in this appendix interprets the technical content and structure for the functional requirements contained in this standard. Development of the page-based TMs shall be accomplished through the use of this standard, the Army DTD, and the Army style sheets. MIL-HDBK-1222 provides further guidance and preferred style and format. The guidance in MIL-HDBK-1222 shall be followed unless it conflicts with the requirements in this standard.

L.4.5 Content structure and format. The examples provided herein are an accurate representation of the content structure and format requirements contained in this appendix and shall be followed to permit the effective use of the DTD for demilitarization or maintenance procedures.

L.4.6 Style and format. This standard provides style and format requirements for the technical content requirements described in this appendix. These requirements are considered mandatory and are intended for compliance.

Source: https://assist.dla.mil -- Downloaded: 2016-12-09T23:24Z
Check the source to verify that this is the current version before use.

L.4.7 Work package development. Data developed in accordance with this appendix shall be divided into work packages. These work packages should be stand-alone and are broken into the following work package types: general information, DMWR introduction, operational requirements, quality acceptance requirements, and supporting information.

L.4.8 Electrostatic discharge (ESD) sensitive parts. If the equipment contains ESD sensitive parts, components, or circuits, cautions and ESD labels shall be incorporated into the applicable tasks and procedures to ensure ESD sensitive parts are not damaged or degraded during maintenance and operation. (Refer to 4.7.20 for requirements on labeling with ESD.) Actions which could damage ESD sensitive parts, but which are not directly related to handling or operation of ESD sensitive parts, shall not be annotated with the ESD acronym, but shall be preceded by a caution statement.

L.4.9 Selective application and tailoring of content using the Appendix A matrixes. This standard contains some requirements that may not be applicable to the preparation of all DMWRs. Selective application and tailoring of requirements contained in this standard are the responsibility of the acquiring activity and shall be accomplished using APPENDIX A. The applicability of some requirements is also designated by one of the following statements: unless specified otherwise by the acquiring activity; as specified by the acquiring activity; or when specified by the acquiring activity.

L.5 **DETAILED REQUIREMENTS.**

L.5.1 General. The requirements provided in this appendix provide the technical content requirements for the maintenance or demilitarization of ammunition.

L.5.2 Preparation of maintenance or demilitarization DMWRs. The DMWR **<dmwr_ammo>** shall contain the following work packages outlined below, as applicable, in addition to the front matter (5.2.1) and rear matter (5.2.2):

a. General Information Work Package.
b. DMWR Introduction Work Package.
c. Operational Requirements Work Package.
d. Quality Acceptance Requirements Work Package.
e. Supporting Information:
   (1) References Work Package.
   (2) Expendable and Durable Items List Work Package.
   (3) Equipment and Special Facilities Work Package.
   (4) Tabulated Data, Military Specifications, and Drawings Work Package.
   (5) Approved Intraplant Transfer Equipment Work Package.
   (6) Pentachlorophenol (PENTA)-Treated Packing Materials Work Package.
   (7) Environmental Requirements Work Package.
   (8) Hazard Analysis Work Package.
   (9) Other Supporting Information Work Packages.

Source: https://assist.dla.mil -- Downloaded: 2016-12-09T23:24Z
Check the source to verify that this is the current version before use.

L.5.3 Chapter 1- General Information and DMWR introduction **<gim>**. This chapter shall contain the following two work packages as prescribed in L.5.3.1 and L.5.3.2:

L.5.3.1 General Information work package **<ginfowp>**. A general information work package shall be prepared in accordance with B.5.2.

L.5.3.2 DMWR introduction work package **<dmwr_introwp>**. The DMWR introduction work package shall be prepared in accordance with the requirements contained in L.5.3.2.1 through L.5.3.2.15.

L.5.3.2.1 Work package identification information **<wpidinfo>**. Work package identification information is required for this work package. (Refer to 4.7.9.3)

L.5.3.2.2 Work package initial setup **<initial_setup>**. Initial setup is not required for this work package.

L.5.3.2.3 Work planning **<work_planning>**. Accumulation of excess ammunition items, removal of line rejects or explosive waste/hazardous waste, and removal of items containing precious metals shall be addressed.

L.5.3.2.4 Disposition **<disposition>**. Disposition guidelines for serviceable and unserviceable components and materials shall be included as a part of each operation description and shall address removal of hazardous materials or components and inspection of salvaged materials prior to transfer to Locally Approved Disposition Services (LADS). Reference may be made to publications for information on packing, marking, and shipping generated assemblies, components, and materials.

L.5.3.2.5 Equipment **<equipment>**. The equipment information provided shall contain, but not be limited to, the following paragraph:

> "Equipment cited herein for the various operations has been approved for the operations specified. Activities intending to use other equipment for these operations must obtain approval from the publication's proponent agency by filing a deviation, waiver, or exception.
>
> Transfer and materials handling equipment must conform to requirements set forth in AR 385-10. The Approved Intraplant Transfer Equipment Work Package lists preferred approved Ammunition Peculiar Equipment (APE) for moving and handling ammunition and components.
>
> Use of APE or nonstandard APE is governed by AR 700-20. All modifications to existing APE and locally fabricated nonstandard APE must have prior approval in accordance with AR 700-20. Locally designed and fabricated equipment, other than APE or nonstandard APE, must be approved by local safety office and the commander of the installation.
>
> APE and associated kits must be operated in accordance with the applicable operation and maintenance manual."

L.5.3.2.6 Safety requirements **<sfty_req>**. The safety requirements information provided shall contain, but not be limited to, the following paragraph:

> "Guidance for safety requirements as prescribed by current safety directives and regulations shall be addressed."

Source: https://assist.dla.mil -- Downloaded: 2016-12-09T23:24Z
Check the source to verify that this is the current version before use.

L.5.3.2.7 Protection against general hazards **<gen_hazards>**. Guidance for general hazards shall be addressed for the ammunition and materials requiring protection against the general hazards. Additionally, requirements for handling of ammunition, requirements for wearing of suitable protective clothing, and precautions when handling PENTA-treated packing materials and pallets shall be included. Reference shall be made to PENTA-Treated Packing Materials Work Package for additional data on personal hygiene requirements, working with PENTA-treated wood, and the disposition of contaminated clothing.

L.5.3.2.8 Protection against specific hazards **<spec_hazards>**. Specific hazards shall be listed in each applicable operation for the ammunition and materials requiring protection against the specific hazards.

L.5.3.2.9 Hazard analysis **<haz_analysis>**. As a minimum, the Hazard Analysis information provided shall contain the following statement and shall reference the Hazard Analysis Work Package.

> "A hazard analysis identifies potential hazards associated with these operations and countermeasures to mitigate these hazards, and assesses the probability and effect of occurrence."

L.5.3.2.10 Environmental regulation compliance **<erc>**. Environmental regulations implemented by federal, state, and local governments shall be addressed. (Refer to L.5.6.7.)

L.5.3.2.11 Resource conservation and recovery regulations **<rcrr>**. Pertinent resource conservation and recovery regulations, as contained in the Resource Conservation and Recovery Act, 42 U.S.C. 6901 et seq., shall be addressed.

L.5.3.2.12 Resource recovery **<resource_recovery>**. Resource recovery shall contain a paragraph similar to the following:

> "All items of salvageable value will be salvaged as scrap or reusable material. All explosives and hazardous materials that can be successfully recovered and reused will be recovered; otherwise, the materials will be disposed of by an environmentally safe and approved method."

L.5.3.2.13 Reporting requirements **<reporting_req>**. Guidance for reporting work accomplishments shall be addressed.

L.5.3.2.14 Tabulated data **<tabdata>**. Reference shall be made to the Tabulated Data, Military Specifications, and Drawings Work Package for the tabulated data.

L.5.3.2.15 Flowchart **<flowchart>**. A flowchart providing an overview of all operations may be included but is not mandatory.

L.5.4 Chapter X - Operational Requirements **<opim>**. This chapter shall contain the following work package as prescribed in L.5.4.1:

L.5.4.1 Operational requirements work package **<dmwr_operationalreqwp>**. The operational requirements work package shall be prepared in accordance with requirements contained in L.5.4.1.1 through L.5.4.1.5. This work package may be repeated for each operation, as necessary, to meet all of the operational requirements. Refer to FIGURE L-1 for an example of a demilitarization operational requirements work package.

Source: https://assist.dla.mil -- Downloaded: 2016-12-09T23:24Z
Check the source to verify that this is the current version before use.

L.5.4.1.1 Work package identification information **<wpidinfo>**. Work package identification information is required for this work package. (Refer to 4.7.9.3)

L.5.4.1.2 Work package initial setup **<initial_setup>**. Initial setup is required for this work package. (Refer to 4.7.9.4.)

L.5.4.1.3 Special safety requirements **<spec_sfty_req>**. Special safety requirements shall be prepared.

L.5.4.1.4 Operational steps **<op_steps>**. Specific operational steps, which are to include warnings, cautions, and notes, shall be prepared. The initial setup shall include equipment requirements, material requirements, and special facilities requirements.

L.5.4.1.5 Flowchart **<flowchart>**. A flowchart of each specific operation may be included but is not mandatory.

L.5.5 Chapter X - Quality Acceptance Requirements **<mim>**. This chapter shall contain the following work package as prescribed in L.5.5.1:

L.5.5.1 Quality acceptance requirements work package **<dmwr_qarwp>**. The quality acceptance requirements work package shall contain either the QA requirements for demilitarization or maintenance of ammunition, but shall not contain information for both. The quality acceptance requirements work package shall address the quality acceptance requirements for the DMWR contained in L.5.5.1.1 through L.5.5.1.5, as applicable.

L.5.5.1.1 Work package identification information **<wpidinfo>**. Work package identification information is required for this work package. (Refer to 4.7.9.3)

L.5.5.1.2 Work package initial setup **<initial_setup>**. Initial setup is not required for this work.

L.5.5.1.3 Demilitarized ammunition **<demil_qar>**. The quality acceptance requirements for ammunition subject to demilitarization shall address the QA plan, inspection, and random sampling of salvaged materiel.

L.5.5.1.4 Maintenance of ammunition **<maintenance_qar>**. The quality acceptance requirements for ammunition subject to maintenance shall address ballistic test requirements (BTRs), product defect criteria, or site defect criteria identified in the operation requirements work package(s) to include defect classification or to incorporate appropriate statistical process control (SPC) statements for performing activities.

L.5.5.1.5 Definitions **<definitions>**. All peculiar quality terms used in the DMWR shall be listed and defined. Alternately, if the definitions are listed in another publication, that publication shall be referenced.

L.5.6 Chapter X - Supporting information **<dmwr_sim>**. Supporting information work packages shall be added to a DMWR as applicable, in the order in which they are presented herein, for purposes of illustration, application, and general information. Supporting information work package identification shall be referenced in the text by work package sequence number followed by the title. Each individual supporting information work package shall begin on a right-hand page. The work packages prescribed in L.5.6.1 through L.5.6.9 below may be included in an ammunition DMWR:

Source: https://assist.dla.mil -- Downloaded: 2016-12-09T23:24Z
Check the source to verify that this is the current version before use.

L.5.6.1 References work package **<refwp>**. This work package shall be prepared in accordance with G.5.2. Military specifications and drawings which are listed in the Tabulated data, military specifications, and drawings work package shall not be listed.

L.5.6.2 Expendable and durable items list work package **<explistwp>**. This work package shall be prepared in accordance with G.5.7.

L.5.6.3 Equipment and special facilities work package **<genwp>**. This work package shall be prepared in accordance with G.5.12. This work package shall consist of a list of equipment and special facilities required to perform the operations described in the DMWR. (Refer to FIGURE L-2 for an example.)

L.5.6.4 Tabulated data, military specifications, and drawings work package **<genwp>**. This work package shall be prepared in accordance with G.5.12. This work package shall consist of a list of tabulated data extracted from Army Data Sheets, and/or military specifications and drawings applicable to the DMWR operations. Refer to FIGURE L-3 for an example.

L.5.6.5 Approved intraplant transfer equipment work package **<genwp>**. This work package shall be prepared in accordance with G.5.12. This work package lists suggested or commonly available intraplant transfer equipment.

L.5.6.6 Pentachlorophenol (PENTA)-treated packing materials work package **<genwp>**. This work package shall be prepared in accordance with G.5.12. When specified by the contracting activity, this work package shall be used to include the latest PENTA-treated packing materials requirements.

L.5.6.7 Environmental requirements work package **<genwp>**. This work package shall be prepared in accordance with G.5.12. This work package shall be used to include the latest environmental requirements. As a minimum, this work package shall include air, noise, and emission problems, and controls as applicable.

L.5.6.8 Hazard analysis work package **<genwp>**. This work package shall be prepared in accordance with G.5.12. This work package shall contain a hazard analysis updated to include the latest requirements. Potential hazards that may result in injury or death shall be identified. Appropriate countermeasures shall be provided.

L.5.6.9 Other supporting information work packages **<genwp>**. This work package shall be prepared in accordance with G.5.12. When specified by the contracting activity, other supporting information work packages may be added to the DMWR.

L.6 **NOTES.**

The notes in section 6 apply to this appendix.

Source: https://assist.dla.mil -- Downloaded: 2016-12-09T23:24Z
Check the source to verify that this is the current version before use.

DMWR 9-1315-CA44-X1 **0003**

DEPOT MAINTENANCE

UNLOAD PALLET (SKID)

INITIAL SETUP:

Materials/Parts
Coveralls, fire resistant (WP 0014, Table 2, Item 2)
Cutter, steel strapping, 3/4-inch (WP 0014, Table 2, Item 3)
Glasses, safety (WP 0014, Table 2, Item 6)
Gloves, leather-palmed (WP 0014, Table 2, Item 8)
Shoes, safety, steel-toed (WP 0014, Table 2, Item 10)

References
TM 9-1300-251-23&P
WP 0004

SPECIAL SAFETY REQUIRMENTS

Operators handling PENTA-treated pallet and all other wood products will wear leather-palmed gloves, fire resistant coveralls, and safety glasses.

Operators handling or nearby steel strapping cutting operations will wear faceshield, leather-palmed gloves, fire resistant coveralls, and safety glasses.

Operators will unload metal container from pallet from top to bottom while wearing leather-palmed gloves, fire resistant coveralls, safety glasses, and steel-toed safety shoes.

OPERATING PROCEDURES

NOTE

All pallets, boxes, and other wooden packing materials marked with the letter "P" are treated with Pentachlorophenol (PENTA).

1. Receive palletized ammunition from storage.
2. Identify palletized ammunition by nomenclature and lot number.
3. Cut steel strapping with steel strapping cutter and remove strapping.
4. Remove metal container from pallet.
5. Inspect pallet for serviceability in accordance with TM 9-1300-251-23&P.
6. Transfer:
   a. Metal container to WP 0004.
   b. Serviceable pallet to storage.
   c. Unserviceable, repairable pallet to carpenter shop.
   d. Unserviceable, unrepairable pallet to LADS.
   e. Steel strapping to LADS.

0003-1

FIGURE L-1. Example of operational requirements work package.

Source: https://assist.dla.mil -- Downloaded: 2016-12-09T23:24Z
Check the source to verify that this is the current version before use.

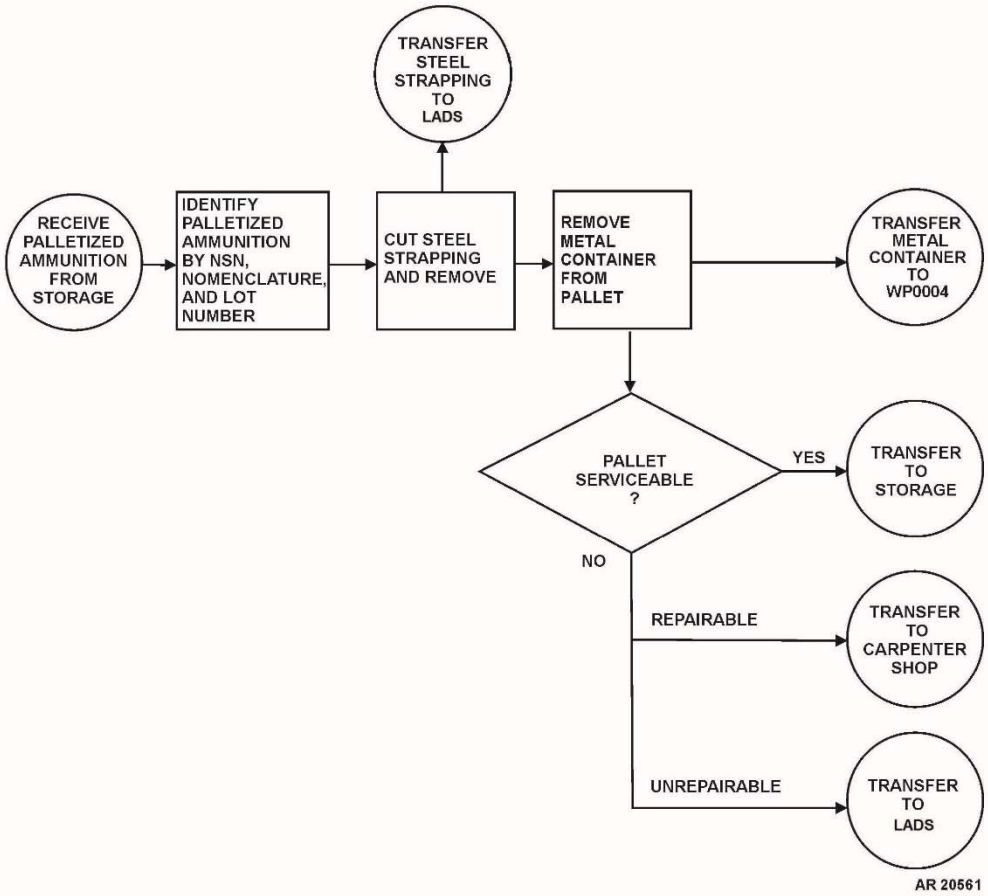

Figure 1. Flowchart for Unload Pallet (Skid).

END OF WORK PACKAGE

FIGURE L-1. Example of operational requirements work package - Continued.

Source: https://assist.dla.mil -- Downloaded: 2016-12-09T23:24Z
Check the source to verify that this is the current version before use.

DEPOT

EQUIPMENT AND SPECIAL FACILITIES

APE EQUIPMENT

Table 1. APE Equipment.

ITEM NO.	NOMENCLATURE	APE
1	Remover, lid pneumatic	1003M1
2	Vise, pneumatic	1065 with kit 1065E021

OTHER EQUIPMENT AND MATERIALS

Table 2. Other Equipment and Materials.

ITEM NO.	NOMENCLATURE	NSN
1	Adapter, fuze wrench	Locally fabricated
2	COVERALLS, EXPLOSIVES HANDLERS': fire resistant	8415-00-279-8719
3	CUTTER, STEEL STRAPPING: 3/4-inch	5110-00-771-3732
4	FACESHIELD, INDUSTRIAL:	4240-00-542-2048
6	Glasses, safety	Commercially available
7	Gloves, cotton	Commercially available
8	Gloves, leather-palmed	Commercially available
10	Shoes, safety, steel-toed	Locally available
11	Shovel, hand, nonsparking	Locally available
12	Wrench, fuze, 1-3/4 inch open end	Locally available

SPECIAL FACILITIES

Table 3. Special Facilities.

ITEM NO.	NOMENCLATURE
1	Conductive flooring or conductive mats

END OF WORK PACKAGE

FIGURE L-2. Example of equipment and special facilities work package.

Source: https://assist.dla.mil -- Downloaded: 2016-12-09T23:24Z
Check the source to verify that this is the current version before use.

DEPOT

DATA, MILITARY SPECIFICATIONS, AND DRAWINGS

DATA

NOTE

Numerical values, such as weights, dimensions, etc., are nominal values, except when specified as maximum or minimum. Actual items may vary slightly from these values. Allowable limits can be obtained from the drawings indicated in this WP.

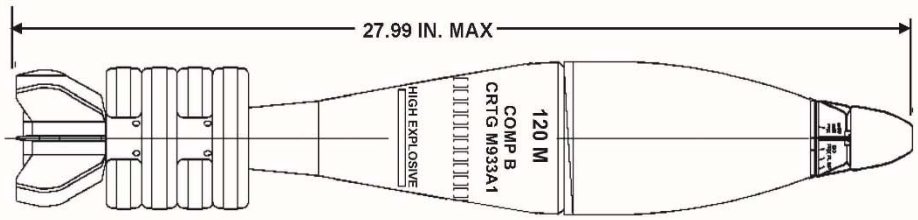

Figure 1. Cartridge, 120mm: HE, M933A1 with Fuze, PD/DLY, M783.

Description

The complete round consists of a PD/DLY fuze, propelling increments, fin assembly, ignition cartridge, and shell body. The shell body is made of wrought steel and is loaded with HE filler. The ignition cartridge has a compression primer and is assembled to the end of the fin assembly. The propelling increments are contained in four horseshoe-shaped felt fiber containers assembled around the fin assembly shaft.

Tabulated Data

Complete Round:	
Type	High Explosive (HE)
Weight	XX lb (XX kg)
Length	XX in. (XX mm)
Weapon used with	120mm Mortar System
NSN	XXXX-XX-XXX-XXXX
DODAC	XXXX-XXXX
PN	XXXXXXXX
CAGEC	XXXXX
Projectile:	
Body material	Steel
Color	Olive drab w/yellow markings
Filler	HE
Weight	XX lb (XX kg)

FIGURE L-3. Example of tabulated data, military specifications, and drawings.

Source: https://assist.dla.mil -- Downloaded: 2016-12-09T23:24Z
Check the source to verify that this is the current version before use.

Temperature Limits

Firing:	
Lower limit	-50 °F (-45.6 °C)
Upper limit	+145 °F (+62.8 °C)
Storage:	
Lower limit	-60 °F (-51.1 °C)
Upper limit	+160 °F (+71.1 °C)

Unit of Issue

Packing	1 round per PA153 fiber container; 2 PA153 fiber containers per PA154 metal container; 24 PA514 metal containers per pallet

Packing Data

PA154 Metal Container:	
Length	12.362 in. (313.995 mm)
Width	6.360 in. (161.544 mm)
Height	31.780 in. (807.212 mm)
Cube	1.45 cu ft (0.041 cu m)

Shipping and Storage Data

Quantity distance class	1.1
Storage compatibility group	E
Proper shipping name	Cartridges for weapons
UN number	0006

MILITARY SPECIFICATIONS

Detail Specification Item Specification for the Cartidge,120MM: High Explosive M934A1 and M933A1	MIL-S-XXXXX

DRAWINGS

Booster Assembly	XXXXXXXX
Cartridge, Ignition, M1020	XXXXXXXX

END OF WORK PACKAGE

FIGURE L-3. Example of tabulated data, military specifications, and drawings – Continued.

Source: https://assist.dla.mil -- Downloaded: 2016-12-09T23:24Z
Check the source to verify that this is the current version before use.

This page intentionally left blank.

Source: https://assist.dla.mil -- Downloaded: 2016-12-09T23:24Z
Check the source to verify that this is the current version before use.

APPENDIX M
SOFTWARE USERS MANUAL (SUM) AND SOFTWARE ADMINISTRATORS MANUAL (SAM)

M.1 **SCOPE.**

M.1.1 Scope. The requirements provided in this appendix provide the technical content requirements for the preparation of Software Users Manuals (SUM) and Software Administrators Manuals (SAM). Unless otherwise stated within, the requirements in this appendix apply to both SUMs and SAMs. This appendix is a mandatory part of this standard. The information contained herein is intended for compliance.

M.2 **APPLICABLE DOCUMENTS.**

The applicable documents in section 2 of the basic standard apply to this appendix.

M.3 **DEFINITIONS.** The definitions below in addition to the definitions in section 3 of this standard apply to this appendix.

M.3.1 Software. Software refers to the computer programming provided as part of a weapon system. In this appendix, software does not refer to the viewing software for an IETM. It does not include the viewing hardware/workstation used to view/use the weapon system software.

M.3.2 Software administrator. Person who has administrative rights and can make changes to software code.

M.3.3 Software users manual (SUM). A SUM is a manual which contains information and procedures for the user of the software. The user usually does not have admin rights and cannot make changes to the software code.

M.3.4 Software administrators manual (SAM). A SAM provides information and procedures to the individuals who have the responsibilities and admin rights to make changes to the software code, do repairs, updates, patches, etc.

M.3.5 Supervisor. User of software that has special privileges above and beyond a regular user but is not an administrator.

M.4 **GENERAL REQUIREMENTS.**

M.4.1 Maintenance level/class applicability. Requirements contained in this appendix are applicable to all maintenance levels/classes/ unless specifically labeled in bold and in parentheses. The labeled requirement may specify a specific level (e.g., **Field**) or a specific maintenance class (refer to 3.89) (e.g., **Maintainer** or **AMC**). The labeled requirement shall be applicable to all TMs containing that maintenance level/class. An explanation of applicable DA maintenance levels/classes is provided in section 3.

M.4.2 Preparation of digital data for electronic delivery. Data prepared and delivered digitally in accordance with this standard shall be XML tagged using the current Army DTD. Data shall be formatted for presentation using the Army style sheets. Refer to 4.6 for information on obtaining or accessing the Army DTD and style sheets. XML tags used in the DTD are noted throughout the text of this standard in bracketed, bold characters (e.g., **`<descwp>`**) as a convenience for the author and to ensure that the tags are used correctly when developing a document instance.

Source: https://assist.dla.mil -- Downloaded: 2016-12-09T23:24Z
Check the source to verify that this is the current version before use.

M.4.3 Use of the Document Type Definition (DTD)/style sheet. The DTD referenced in this appendix interprets the technical content and structure for the functional requirements contained in this standard. Development of the page-based TMs shall be accomplished through the use of this standard, the Army DTD, and the Army style sheets. MIL-HDBK-1222 provides further guidance and preferred style and format. The guidance in MIL-HDBK-1222 shall be followed unless it conflicts with the requirements in this standard.

M.4.4 Content structure. The examples provided herein are an accurate representation of the content structure requirements contained in this appendix and shall be followed to permit the effective use of the DTD.

M.4.5 Style and format. This standard provides style and format requirements for the technical content requirements described in this appendix. These requirements are considered mandatory and are intended for compliance.

M.4.6 Work package development. Data developed in accordance with this appendix shall be divided into work packages. These work packages should be stand alone and are broken into the following work package types: general information, software summary, software effectivity, differences between software versions, features and capabilities, screen displays, menus/directories, tools and buttons, security and privacy, supervisory controls, power up/startup, power down/shutdown, accessing/exiting software, key commands, process and commands, user interface, additional software operation, troubleshooting introduction, malfunction symptom index, messages, recovery from errors, troubleshooting, maintenance, references, basic issue items, additional authorization list, and expendable and durable items list. A work package shall contain all information and references required to support the work package type.

M.4.7 Selective application and tailoring of content using Appendix A matrixes. This standard contains some requirements that may not be applicable to the preparation of all TMs. Selective application and tailoring of requirements contained in this standard are the responsibility of the acquiring activity and shall be accomplished using APPENDIX A matrixes. The applicability of some requirements is also designated by one of the following statements: unless specified otherwise by the acquiring activity; as specified by the acquiring activity; or when specified by the acquiring activity.

M.5 **DETAILED REQUIREMENTS.**

M.5.1 Content and format. When specified by the acquiring activity, a software users manual **<sum>** and/or software administrators manual **<sam>** shall be prepared. Content shall be limited to information/procedures related to the software. A SUM/SAM manual shall consist of front matter, **<gim>**, **<softdescdata>**, **<opim>**, **<tim>**, **<mim>**, **<sim>**, and rear matter as described in M.5.2 through M.5.9. SUMs/SAMs shall be formatted in the same manner as operator and maintenance TMs. Any procedures requiring administrative privileges to perform shall be put in a SAM and shall not be put in a SUM.

M.5.1.1 Hardware related procedures. Hardware related procedures in SUMs/SAMs manuals shall be restricted to powerup/startup procedures required to get to the software and to explanation/use of hardware buttons/controls which affect the software operation. Reference shall be made to the hardware manual for any other hardware related procedures.

Source: https://assist.dla.mil -- Downloaded: 2016-12-09T23:24Z
Check the source to verify that this is the current version before use.

M.5.1.2 SUMs/SAMs in combination with other manuals. SUMS and SAMs may be prepared as separate manuals for each system. As specified by the acquiring activity, SUMs and SAMs may be combined together as one manual. SUM/SAM information shall not be combined with hardware operator and/or maintenance manuals. Software information may be included as a section in the weapon system TM(s).

M.5.1.3 Updates to SUMs/SAMs. For SUMs and SAMs, changes shall be used to make changes to information related to the same version of the software. When a new version of the software is issued, a revision to the SUM and SAM shall be prepared. If required, the information for the earlier version(s) may be retained within the revised SUM or SAM. If information for older versions is retained in a revision, the software effectivity work package and differences between versions work package shall be prepared.

M.5.1.4 Numbering SUMs/SAMs. In accordance with DA PAM 25-40, individual SUMs and SAMs shall have a -SUM or -SAM suffix. A combined SUM and SAM manual shall have a -SAM suffix. The differentiation between an administrators manual and a combined user and administrator manual shall be made in the publication title.

M.5.2 Front and rear matter. The front and rear matter shall be prepared in accordance with the requirements contained in 5.2.1 and 5.2.2.

M.5.3 Software general information chapter **<gim>**. A software general information chapter **<gim>** shall be provided. It shall consist of the following work packages:

a. Software general information work package **<softginfowp>**.

b. Software summary work package **<softsumwp>**.

c. Software effectivity work package **<softeffectwp>** (Revisions only).

d. Differences between versions work package **<softdiffversionwp>** (Revisions only).

M.5.3.1 Software general information work package **<softginfowp>**. A software general information work package shall be prepared and shall contain the information contained in M.5.3.1.1 through M.5.3.1.11 in the order presented and as applicable:

M.5.3.1.1 Work package identification information **<wpidinfo>**. Work package identification information is required for this work package. (Refer to 4.7.9.3)

M.5.3.1.2 Work package initial setup **<initial_setup>**. Initial setup is not required for this work package.

M.5.3.1.3 Scope **<scope>** (Required). Scope shall be as prescribed in paragraph B.5.2.3.

M.5.3.1.4 Maintenance forms, records, and reports **<mfrr>** (Required). Maintenance forms, records, and reports paragraph shall be as prescribed in paragraph B.5.2.4.

M.5.3.1.5 Software improvement recommendations **<eir>** (Required). This paragraph shall provide the software user/administrator with instructions for submitting recommendations for improvements related to the software. It may be the same as for Equipment Improvement Recommendations (EIR) as prescribed in paragraph B.5.2.5.

Source: https://assist.dla.mil -- Downloaded: 2016-12-09T23:24Z
Check the source to verify that this is the current version before use.

M.5.3.1.6 System overview **<softsysover>** (Required). This paragraph shall contain a brief description of the software, its purpose and use, etc. General descriptions of the software capabilities may also be provided. More detailed information shall be provided in the features and capabilities work package described in M.5.4.1.

M.5.3.1.7 Document overview **<softdocover>** (Required). This paragraph shall contain a brief description of this manual and any other documentation available for the software.

M.5.3.1.8 Warranty information **<wrntyref>**. As applicable, warranty information related to the software shall be provided in this paragraph. Hardware related warranty information shall not be included here unless it also applies to the software.

M.5.3.1.9 Destruction of Army software to prevent enemy use **<destructmat>**. Destruction information shall be prepared in accordance with B.5.2.9.

M.5.3.1.10 Nomenclature cross reference list **<nomenreflist>**. As applicable, a software nomenclature cross reference list shall be prepared in accordance with paragraph B.5.2.13. This list shall only contain nomenclature related to the software. Hardware nomenclature shall be contained in the operator and/or maintenance manuals for the hardware.

M.5.3.1.11 List of abbreviations/acronyms **<loa>** (Required). This paragraph shall contain a list of the software related abbreviations and acronyms used within the SUM or SAM. This list shall only contain abbreviation/acronyms related to the software. Hardware abbreviations/acronyms shall be contained in the operator and/or maintenance manuals for the hardware.

M.5.3.2 Software summary work package **<softsumwp>**. This work package shall be prepared and shall contain the information in paragraphs M.5.3.2.1 through M.5.3.2.8 in the order presented and as applicable.

M.5.3.2.1 Work package identification information **<wpidinfo>**. Work package identification information is required for this work package. (Refer to 4.7.9.3.)

M.5.3.2.2 Work package initial setup **<initial_setup>**. Initial setup information is not required for this work package.

M.5.3.2.3 Software application **<soft_app>** (Required). This paragraph shall contain a brief description of how the software applies at various levels of command and at different organizations/activities.

M.5.3.2.4 Software inventory **<soft_inventory>** (Required). This paragraph shall contain a list/description of the software components provided

M.5.3.2.5 Software environment **<soft_environment>** (Required). This paragraph shall contain information about the environment in which the software must run and any requirements with regard to the environment for the software. The environment for the software could include the operating system, the database system, specific developmental tools, or compiler.

M.5.3.2.6 Security and privacy **<soft_secpriv>** (Required). This paragraph shall contain a brief description of the security and privacy measures provided with the software. Detailed procedures shall be provided in the operating procedures.

Source: https://assist.dla.mil -- Downloaded: 2016-12-09T23:24Z
Check the source to verify that this is the current version before use.

M.5.3.2.7 Supervisory controls **<soft_superctrls>**. This paragraph shall contain a brief description of any supervisory controls provided with the software. Detailed procedures for using these controls shall be provided in the operating procedures.

M.5.3.2.8 Assistance and problem reporting **<soft_assistreport>** (Required). This paragraph shall contain information as to how to obtain assistance with the software and how/where to report problems with the software.

M.5.3.3 Software effectivity work package **<softeffectwp>** (Revisions only). This work package shall contain the information in M.5.3.3.1 through M.5.3.3.3 below.

M.5.3.3.1 Work package identification information **<wpidinfo>**. Work package identification information is required for this work package. (Refer to 4.7.9.3.)

M.5.3.3.2 Work package initial setup **<initial_setup>**. Initial setup information is not required for this work package.

M.5.3.3.3 Software effectivity information **<geninfo>**. This work package shall contain information about what systems each version of the software pertains to when more than one version of the software must be covered in the SUM or SAM. This information may be narrative or tabular.

M.5.3.4 Differences between software versions work package **<softdiffversionwp>** **(Revisions only)**. This work package shall contain the information in M.5.3.4.1 through M.5.3.4.3 below.

M.5.3.4.1 Work package identification information **<wpidinfo>**. Work package identification information is required for this work package. (Refer to 4.7.9.3.)

M.5.3.4.2 Work package initial setup **<initial_setup>**. Initial setup information is not required for this work package.

M.5.3.4.3 Differences between software versions information **<eqpdiff>**. This work package shall contain detailed information about the differences between versions of the software when more than one version of the software must be covered in a SUM or SAM.

M.5.4 Software description and data chapter **<softdescdata>**. A software description and data chapter shall be provided and shall contain the following work packages in the order provided:

a. Features and capabilities work package **<softfeaturescapwp>**.

b. Screen displays work package **<softscreendisplaywp>**.

c. Menus and directories work package **<softmenuwp>**.

d. Tools and buttons work package **<softtoolswp>**.

M.5.4.1 Features and capabilities work package **<softfeaturescapwp>** (Required). This work package shall contain the information in M.5.4.1.1 through M.5.4.1.3 below.

M.5.4.1.1 Work package identification information **<wpidinfo>**. Work package identification information is required for this work package. (Refer to 4.7.9.3.)

Source: https://assist.dla.mil -- Downloaded: 2016-12-09T23:24Z
Check the source to verify that this is the current version before use.

M.5.4.1.2 Work package initial setup **<initial_setup>**. Initial setup information is not required for this work package.

M.5.4.1.3 Capabilities and features **<proc>.** This work package shall contain descriptions of the features and capabilities of the software and shall also provide instructions for how to use these features and/or capabilities. This work package shall be used for features/capabilities other than those covered in other work packages (e.g. key commands, security, etc.)

M.5.4.2 Screen displays work package **<softscreendisplaywp>** (Required). This work package shall contain the information in M.5.4.2.1 through M.5.4.2.3 below.

M.5.4.2.1 Work package identification information **<wpidinfo>**. Work package identification information is required for this work package. (Refer to 4.7.9.3.)

M.5.4.2.2 Work package initial setup **<initial_setup>**. Initial setup information is not required for this work package.

M.5.4.2.3 Screen displays . This work package shall contain information about and descriptions of the screens that display to the user/administrator while using the software.

M.5.4.3 Menus and directories work package **<softmenuwp>**. This work package shall contain the information in M.5.4.3.1 through M.5.4.3.3 below.

M.5.4.3.1 Work package identification information **<wpidinfo>**. Work package identification information is required for this work package. (Refer to 4.7.9.3.)

M.5.4.3.2 Work package initial setup **<initial_setup>**. Initial setup information is not required for this work package.

M.5.4.3.3 Menus and directories **<proc>**. This work package shall contain information about and descriptions of the menus and directory structure for the software. Work package may also contain procedures for how to use the menus/submenus, file structure, file management tools, etc. that are part of the software.

M.5.4.4 Tools and buttons work package **<softtoolswp>** (Required). This work package shall contain the information in M.5.4.4.1 through M.5.4.4.3 below.

M.5.4.4.1 Work package identification information **<wpidinfo>**. Work package identification information is required for this work package. (Refer to 4.7.9.3.)

M.5.4.4.2 Work package initial setup **<initial_setup>**. Initial setup information is not required for this work package.

M.5.4.4.3 Tools and buttons **<ctrlindtab>**. This work package shall contain descriptions of all the buttons, tools, and/or toolbars provided by the software. As applicable, this work package shall also contain procedures for using these buttons and tools/toolbars. As applicable, this work package may also contain information/instructions for hardware buttons/controls that are used in the operation of the software.

M.5.5 Software operator instructions chapter **<sopim>**. A software operating instructions chapter **<opim>** shall be prepared and shall contain, as applicable, the following work packages in the order provided:

a. Security and privacy procedures work package **<softsecprivwp>** (Required).

Source: https://assist.dla.mil -- Downloaded: 2016-12-09T23:24Z
Check the source to verify that this is the current version before use.

b. Supervisory controls work package **<softsuperctrlswp>**.

c. Powerup/startup and power down/shutdown procedures work package **<softpowerupwp>** (Required)

d. Accessing/exiting software work package **<softaccesswp>** (Required).

e. Key commands work package **<softkeycmdswp>**.

f. Process and commands work package **<softproccmdwp>**.

g. User interface work package **<softguiwp>**.

h. Software operating conventions work package **<softopconventionswp>**.

i. Additional software operation work package **<softgenwp>**.

M.5.5.1 Security and privacy procedures work package **<softsecprivwp> (Required)**. A software security and privacy procedures work package shall be prepared and shall contain the information in M.5.5.1.1 through M.5.5.1.3 below.

M.5.5.1.1 Work package identification information **<wpidinfo>**. Work package identification information is required for this work package. (Refer to 4.7.9.3)

M.5.5.1.2 Work package initial setup **<initial_setup>**. Initial setup information is required for this work package. (Refer to 4.7.9.4.)

M.5.5.1.3 Security and privacy procedures **<proc>**. . This work package shall contain procedures for the security and privacy features of the software. Security and privacy procedures include such things as setting passwords, changing passwords, setting file access restrictions, account management (e.g., setting up new ones, removing accounts, etc.)

M.5.5.2 Supervisory controls work package **<softsuperctrlswp>** (Required for SAM only)**.** This work package shall contain the information in M.5.5.2.1 through M.5.5.2.3 below.

M.5.5.2.1 Work package identification information **<wpidinfo>**. Work package identification information is required for this work package. (Refer to 4.7.9.3)

M.5.5.2.2 Work package initial setup **<initial_setup>**. Initial setup information is required for this work package. (Refer to 4.7.9.4.)

M.5.5.2.3 Supervisory controls **<proc>**. This work package shall contain information about and descriptions of the supervisory controls available within the software. Work package shall also contain procedures for how to use these supervisory controls (e.g., setting them, turning them on/off, etc.)

M.5.5.3 Powerup/startup and power down/shutdown procedures work package **<softpowerupwp>** (Required). This work package shall contain the information in M.5.5.3.1 through M.5.5.3.3 below.

M.5.5.3.1 Work package identification information **<wpidinfo>**. Work package identification information is required for this work package. (Refer to 4.7.9.3)

M.5.5.3.2 Work package initial setup **<initial_setup>**. Initial setup information is required for this work package. (Refer to 4.7.9.4.)

Source: https://assist.dla.mil -- Downloaded: 2016-12-09T23:24Z
Check the source to verify that this is the current version before use.

M.5.5.3.3 Powerup/startup procedures **<proc>**. This work package shall contain procedures for powering up/starting up the workstation/viewing equipment to enable access to the software.

M.5.5.3.4 Powerdown/shutdown procedures **<proc>**. This work package shall contain procedures for powering down/shutting down the workstation/viewing equipment for the software.

M.5.5.4 Accessing/exiting software work package **<softaccesswp>** (Required)**.** This work package shall contain the information in M.5.5.4.1 through M.5.5.4.3 below.

M.5.5.4.1 Work package identification information **<wpidinfo>**. Work package identification information is required for this work package. (Refer to 4.7.9.3)

M.5.5.4.2 Work package initial setup **<initial_setup>**. Initial setup information is required for this work package. (Refer to 4.7.9.4.)

M.5.5.4.3 Accessing/exiting software procedures **<proc>**. This work package shall contain procedures for accessing/logging on to the software. This work package shall also contain procedures for exiting/logging off the software.

M.5.5.5 Key commands work package **<softkeycmdswp>**. This work package shall contain the information in M.5.5.5.1 through M.5.5.5.3 below.

M.5.5.5.1 Work package identification information **<wpidinfo>**. Work package identification information is required for this work package. (Refer to 4.7.9.3)

M.5.5.5.2 Work package initial setup **<initial_setup>**. Initial setup information is required for this work package. (Refer to 4.7.9.4.)

M.5.5.5.3 Key commands **<softkeycmdswp>**. This work package shall contain descriptions for the key commands contained in the software and shall contain procedures for how to use these key commands.

M.5.5.6 Processes and commands work package **<softproccmdwp>**. This work package shall contain the information in M.5.5.6.1 through M.5.5.6.3 below.

M.5.5.6.1 Work package identification information **<wpidinfo>**. Work package identification information is required for this work package. (Refer to 4.7.9.3)

M.5.5.6.2 Work package initial setup **<initial_setup>**. Initial setup information is required for this work package. (Refer to 4.7.9.4.)

M.5.5.6.3 Process and commands **<proc>**. This work package shall contain procedures for running any processes and/or executing any commands contained in the software.

M.5.5.7 User interface work package **<softguiwp>**. This work package shall contain the information in M.5.5.7.1 through M.5.5.7.3 below.

M.5.5.7.1 Work package identification information **<wpidinfo>**. Work package identification information is required for this work package. (Refer to 4.7.9.3)

M.5.5.7.2 Work package initial setup **<initial_setup>**. Initial setup information is required for this work package. (Refer to 4.7.9.4.)

Source: https://assist.dla.mil -- Downloaded: 2016-12-09T23:24Z
Check the source to verify that this is the current version before use.

M.5.5.7.3 User interface procedures **<proc>**. This work package shall describe any interfaces that are part of the software and shall provide instructions for how to use these interfaces.

M.5.5.8 Software operating conventions **<softopconventionswp>**. This work package shall contain the information in M.5.5.8.1 through M.5.5.8.3 below:

M.5.5.8.1 Work package identification information **<wpidinfo>**. Work package identification information is required for this work package. (Refer to 4.7.9.3)

M.5.5.8.2 Work package initial setup **<initial_setup>**. Initial setup information is required for this work package. (Refer to 4.7.9.4.)

M.5.5.8.3 Software operating conventions **<proc>**. This procedure shall describe any operating conventions that are unique to the software and shall provide instructions to operate the weapon system/equipment and auxiliary equipment software in all modes of operation. Any combination or control settings that will create a hazard to personnel or cause damage to equipment shall be preceded by a warning or caution.

M.5.5.9 Additional software operation work package **<softgenwp>**. This work package shall be used for any software operating procedures which are not covered in M.5.5.1 through M.5.5.8.

M.5.5.9.1 Work package identification information **<wpidinfo>**. Work package identification information is required for this work package. (Refer to 4.7.9.3)

M.5.5.9.2 Work package initial setup **<initial_setup>**. Initial setup information is required for this work package. (Refer to 4.7.9.4.)

M.5.6 Software troubleshooting chapter **<tim>** (Required). This chapter shall contain the following work packages in the order provided as applicable:

a. Introduction work package **<tsintrowp>** (Required).

b. Troubleshooting index work package **<tsindexwp>** (Required for SAM only).

c. Messages work package **<softmessageswp>** (Required for SAM only).

d. Recovery from errors, malfunctions, and emergencies work package **<softerrorswp>**.

e. Troubleshooting work package **<tswp>**.

M.5.6.1 Introduction work package **<tsintrowp>** (Required). This work package shall be prepared in accordance with D.5.5.3.

M.5.6.2 Troubleshooting index work package **<tsindexwp>** (Required for SAM only). This work package shall be prepared in accordance with D.5.5.5.

M.5.6.3 Messages work package **<softmessageswp>** (Required for SAM only). This work package shall contain the information in M.5.6.3.1 through M.5.6.3.3 below.

M.5.6.3.1 Work package identification information **<wpidinfo>**. Work package identification information is required for this work package. (Refer to 4.7.9.3)

M.5.6.3.2 Work package initial setup **<initial_setup>**. Initial setup information is not required for this work package.

Source: https://assist.dla.mil -- Downloaded: 2016-12-09T23:24Z
Check the source to verify that this is the current version before use.

M.5.6.3.3 Messages **<message>**. This work package shall describe all possible error messages the user might see. The description shall include the wording for the error messages and explanation of what the error message means. This work package provides the user with a place to look up error messages to find out what they mean. Error messages may be repeated in the troubleshooting index work package to refer the user to the troubleshooting and/or corrective action needed for the error message.

M.5.6.4 Recovery from errors, malfunctions, and emergencies work package **<softerrorswp>**. This work package shall contain the information in M.5.6.4.1 through M.5.6.4.3 below.

M.5.6.4.1 Work package identification information **<wpidinfo>**. Work package identification information is required for this work package. (Refer to 4.7.9.3)

M.5.6.4.2 Work package initial setup **<initial_setup>**. Initial setup information is required for this work package. (Refer to 4.7.9.4.)

M.5.6.4.3 Recovery from errors, malfunctions, and emergencies **<proc>**. This work package shall provide procedures for recovering from errors, correcting malfunctions, and handling emergencies.

M.5.6.5 Troubleshooting work package **<tswp>**. This work package shall be prepared in accordance with D.5.5.8.4. As applicable, this work package shall contain any information/procedures needed to cover interfaces between software troubleshooting and hardware troubleshooting.

M.5.7 Software maintenance chapter **<mim>** (Optional for SUM and Required for SAM). This chapter shall be prepared in accordance with APPENDIX E.

M.5.8 Supporting information chapter **<sim>** (Required). A supporting information chapter shall be prepared and shall contain the following work packages in the order provided as applicable:

a. References work package **<refwp>** (Required).

b. Basic issue items work package **<softbiiwp>** (Required).

c. Additional authorization list work package **<aalwp>**.

d. Expendable and durable items list work package **<explistwp>**.

e. Additional supporting information work package **<genwp>**.

M.5.8.1 References work package **<refwp> (Required)**. References for the SUM or SAM information shall be included in this work package. This work package shall be prepared in accordance with G.5.2.

M.5.8.2 Software basic issue items (BII) work package **<softbiiwp> (Required)**. This work package shall be prepared and shall contain the information in M.5.8.2.1 through M.5.8.2.3

M.5.8.2.1 Work package identification information **<wpidinfo>**. Work package identification information is required for this work package. (Refer to 4.7.9.3)

Source: https://assist.dla.mil -- Downloaded: 2016-12-09T23:24Z
Check the source to verify that this is the current version before use.

M.5.8.2.2 Work package initial setup **<initial_setup>**. Initial setup information is not required for this work package.

M.5.8.2.3 BII list **<softbii>**. This list shall be prepared in accordance with G.5.4.5 and shall contain as a minimum the SUM and SAM. This list shall also include any other software related BII items. This list shall not be a duplication of the BII contained in the hardware operator manual and it shall not include any hardware related BII items.

M.5.8.3 Additional authorization list work package **<aalwp>**. If applicable, this work package may be included in the SUM. If prepared, this work package shall be prepared in accordance with G.5.5 and shall include only applicable software related AAL items. This work package shall not be a duplication of the AAL contained in the hardware operator manual and it shall not include hardware related AAL items.

M.5.8.4 Expendable and durable items work package **<explistwp>**. If applicable, this work package may be included in the SUM and/or SAM. If prepared, this work package shall be prepared in accordance with G.5.7 and shall include only software related expendable items. This work package shall not be a duplication of the expendable list from the operator and/or maintenance manuals for the hardware or contain any hardware related expendables.

M.5.8.5 Additional supporting information work package **<genwp>**. This work package shall be prepared as required for information not covered in M.5.8.1 through M.5.8.4. This work package shall be prepared in accordance with G.5.12.

M.5.9 Rear Matter. Rear matter for SUMs and SAMs shall be prepared in accordance with 5.2.2.

M.6 **NOTES.**

The notes in section **6** apply to this appendix.

Source: https://assist.dla.mil -- Downloaded: 2016-12-09T23:24Z
Check the source to verify that this is the current version before use.

This page intentionally left blank.

Source: https://assist.dla.mil -- Downloaded: 2016-12-09T23:24Z
Check the source to verify that this is the current version before use.

APPENDIX N
GENERAL MAINTENANCE MANUAL

N.1 SCOPE.

N.1.1 Scope. The requirements provided in this appendix provide the technical content requirements for the preparation of General Maintenance Manuals. This appendix is a mandatory part of this standard. The information contained herein is intended for compliance.

N.2 APPLICABLE DOCUMENTS.

The applicable documents in section 2 of the basic standard apply to this appendix.

N.3 DEFINITIONS.

The definitions in section 3 of this standard apply to this appendix.

N.4 GENERAL REQUIREMENTS.

N.4.1 Maintenance level/class applicability. Requirements contained in this appendix are applicable to all maintenance levels/classes/ unless specifically labeled in bold and in parentheses. The labeled requirement may specify a specific level (e.g., **Field**) or a specific maintenance class (refer to 3.89) (e.g., **Maintainer** or **AMC**). The labeled requirement shall be applicable to all TMs containing that maintenance level/class. An explanation of applicable DA maintenance levels/classes is provided in section 3.

N.4.2 Preparation of digital data for electronic delivery. Data prepared and delivered digitally in accordance with this standard shall be XML tagged using the current Army DTD. Data shall be formatted for presentation using the Army style sheets. Refer to 4.6 for information on obtaining or accessing the Army DTD and style sheets. XML tags used in the DTD are noted throughout the text of this standard in bracketed, bold characters (e.g., **<descwp>**) as a convenience for the author and to ensure that the tags are used correctly when developing a document instance.

N.4.3 Use of the Document Type Definition (DTD)/style sheet. The DTD referenced in this appendix interprets the technical content and structure for the functional requirements contained in this standard. Development of the page-based TMs shall be accomplished through the use of this standard, the Army DTD, and the Army style sheets. MIL-HDBK-1222 provides further guidance and preferred style and format. The guidance in MIL-HDBK-1222 shall be followed unless it conflicts with the requirements in this standard.

N.4.4 Content structure. The examples provided herein are an accurate representation of the content structure requirements contained in this appendix and shall be followed to permit the effective use of the DTD.

N.4.5 Style and format. This standard provides style and format requirements for the technical content requirements described in this appendix. These requirements are considered mandatory and are intended for compliance.

Source: https://assist.dla.mil -- Downloaded: 2016-12-09T23:24Z
Check the source to verify that this is the current version before use.

N.4.6 Work package development. Data developed in accordance with this appendix shall be divided into work packages. These work packages should be stand alone and are broken into the following work package types: general information, equipment description and data, maintenance, general maintenance, references, and expendable and durable items list. A work package shall contain all information and references required to support the work package type.

N.4.7 Selective application and tailoring of content using Appendix A matrixes. This standard contains some requirements that may not be applicable to the preparation of all TMs. Selective application and tailoring of requirements contained in this standard are the responsibility of the acquiring activity and shall be accomplished using APPENDIX A. The applicability of some requirements is also designated by one of the following statements: unless specified otherwise by the acquiring activity; as specified by the acquiring activity; or when specified by the acquiring activity.

N.5 **DETAILED REQUIREMENTS.**

N.5.1 Content and format. When specified by the acquiring activity, a general maintenance manual **<genmaintman>** shall be prepared. Content shall be limited to information/procedures related to general maintenance. A general maintenance manual shall consist of front matter, **<gim>**, **<mim>** (one or more), **<sim>**, and rear matter as described in N.5.2 through N.5.6.

N.5.2 Introductory and rear matter. The introductory and rear matter shall be prepared in accordance with requirements contained in 5.2.1 and 5.2.2.

N.5.3 General information chapter **<gim>**. A general information chapter **<gim>** for a general maintenance manual shall be provided. It shall consist of the following work packages:

a. General information work package **<genmaint_ginfowp>** (Required).

b. Equipment description and data work package **<descwp>** (As required).

N.5.3.1 General maintenance manual general information work package **<gmginfowp>**. A general information work package for a general maintenance manual shall be prepared and shall contain the information contained in N.5.3.1.1 through N.5.3.1.10 in the order presented and as applicable:

N.5.3.1.1 Work package identification information **<wpidinfo>**. Work package identification information is required for this work package. (Refer to 4.7.9.3)

N.5.3.1.2 Work package initial setup **<initial_setup>**. Initial setup is not required for this work package.

N.5.3.1.3 Scope **<scope>** (Required). Scope shall be as prescribed in B.5.2.3.

N.5.3.1.4 Maintenance forms, records, and reports **<mfrr>** (Required). Maintenance forms, records, and reports paragraph shall be as prescribed in B.5.2.4.

N.5.3.1.5 Equipment improvement recommendations **<eir>** (Required). Equipment improvement recommendations shall be in accordance with B.5.2.5.

N.5.3.1.6 Policy **<policy>**. As applicable, this paragraph shall contain policy information related to general maintenance.

Source: https://assist.dla.mil -- Downloaded: 2016-12-09T23:24Z
Check the source to verify that this is the current version before use.

N.5.3.1.7 Safety **<safety>**. As applicable, this paragraph shall contain safety information related to general maintenance.

N.5.3.1.8 Warranty information **<wrntyref>**. As applicable, warranty information related to the equipment and/or general maintenance shall be included.

N.5.3.1.9 Nomenclature cross/reference list **<nomenreflist>**. As applicable, a nomenclature cross reference list shall be prepared in accordance with paragraph B.5.2.13. This list shall only contain nomenclature related to general maintenance.

N.5.3.1.10 List of abbreviations/acronyms **<loa>** (Required). This paragraph shall contain a list of the general maintenance related abbreviations and acronyms used within the general maintenance manual.

N.5.3.2 Equipment description and data work package **<descwp>**. As applicable, an equipment description and data work package shall be included and shall be prepared in accordance with B.5.3.

N.5.4 Maintenance chapter **<mim>** (Required). A general maintenance manual shall contain one or more maintenance chapters. These chapters shall be prepared in accordance with APPENDIX E. These chapters shall contain maintenance procedures work packages and/or general maintenance work packages

N.5.5 Supporting information chapter **<sim>** (Required). A supporting information chapter shall be prepared and shall contain the following work packages in the order provided as applicable:

a. References work package **<refwp>** (Required).

b. Expendable and durable items list work package **<explistwp>**.

c. Additional supporting information work package **<genwp>**.

N.5.5.1 References work package **<refwp> (Required)**. References for the general maintenance manual shall be included in this work package. This work package shall be prepared in accordance with G.5.2

N.5.5.2 Expendable and durable items list work package **<explistwp>**. Expendable and durable items required for general maintenance shall be included in this work package. This work package shall be prepared in accordance with G.5.7.

N.5.5.3 Additional supporting information work package **<genwp>**. This work package shall be prepared as required for information not covered in N.5.5.1 through N.5.5.2. This work package shall be prepared in accordance with G.5.12.

N.5.6 Rear Matter. Rear matter for a general maintenance manual shall be prepared in accordance with 5.2.2.

N.6 **NOTES.**

The notes in section 6 apply to this appendix**.**

Source: https://assist.dla.mil -- Downloaded: 2016-12-09T23:24Z
Check the source to verify that this is the current version before use.

CONCLUDING MATERIAL

Custodians:
Army - TM
Marine Corps - MC

Preparing Activity:
Army - TM

Review Activities:
Army - APD, AR, AT, AV,
CR, EA, MI, PT

Project Number:
TMSS-2014-023

NOTE: The activities listed above were interested in this document as of the date of this document. Since organizations and responsibilities can change, you should verify the currency of the information above using the ASSIST Online database at https://assist.dla.mil/.

Source: https://assist.dla.mil -- Downloaded: 2016-12-09T23:24Z
Check the source to verify that this is the current version before use.