MIL-C-83733C(USAF)
28 July 1986
SUPERSEDING
MIL-C-83733B(USAF)
10 December 1980

MILITARY SPECIFICATION

CONNECTORS, ELECTRICAL MINIATURE, RECTANGULAR TYPE, RACK TO PANEL, ENVIRONMENT RESISTING, 200°C TOTAL CONTINUOUS OPERATING TEMPERATURE, GENERAL SPECIFICATION FOR

This specification is approved for use within the Air Force Acquisition Logistics Division, Directorate of Electronic Support (AFALD/PTES), Gentile AFS, Dayton, Ohio 45444, Department of the Air Force, and is available for use by all Departments and Agencies of the Department of Defense.

1. SCOPE

1.1 Scope. This specification covers environment and fluid resisting, miniature, rectangular type, rack to panel electrical connectors (plugs and receptacles). These connectors utilize rear release, removable crimp type contacts and are capable of continuous operation from -65°C to +200°C.

1.2 Classification.

1.2.1 Military part number. Unless otherwise specified (see 3.1), the military part number shall consist of the letter "M" and the basic number of the specification sheet; the letters for the class and shell size, and the number of the insert arrangement, as shown in the following example

M83733/1 R B 101

- Military designator and specification sheet no. — M83733/1
- Class R - Environment resisting — R
- Shell size A or B — B
- Insert arrangement See MIL-STD-1531 (shell size A) or MIL-STD-1532 (shell size B) — 101

2. APPLICABLE DOCUMENTS

2.1 Government documents.

2.1.1 Specifications and standards. The following specifications and standards form a part of this specification to the extent specified herein. Unless otherwise specified, the issues of these documents shall be those listed in the issue of the Department of Defense Index of Specifications and Standards (DODISS) and supplement thereto, cited in the solicitation.

SPECIFICATIONS

FEDERAL

QQ-A-591 - Aluminum Alloy Die Castings.

Beneficial comments (recommendations, additions, deletions) and any pertinent data which may be of use in improving this document should be addressed to Electronic Support Division AFLC, 2750 ABW/ES, Gentile AF Station, Dayton, Ohio 45444, by using the self-addressed Standardization Document Improvement Proposal (DD Form 1426) appearing at the end of this document or by letter.

DISTRIBUTION STATEMENT A. Approved for public release; distribution is unlimited
Source: https://assist.dla.mil - Downloaded: 2016-11-25T22:04Z
Check the source to verify that this is the current version before use.

MILITARY

MIL-C-17	-	Cables, Radio Frequency, Flexible and Semirigid.
MIL-G-3058	-	Gasoline, Automotive, Combat.
MIL-H-5606	-	Hydraulic Fluid, Petroleum Base Aircraft, Missile, and Ordnance.
MIL-T-5624	-	Turbine Fuel, Aviation, Grades JP-4 and JP-5.
MIL-L-7808	-	Lubricating Oil, Aircraft Turbine Engine, Synthetic Base.
MIL-A-8243	-	Anti-icing and Deicing - Defrosting Fluid.
MIL-I-17214	-	Indicator, Permeability, Low-Mu (Go-No Go).
MIL-C-22520	-	Crimping Tools, Terminal Hand or Power Actuated, Wire Termination, and Tool Kits.
MIL-W-22759	-	Wire, Electric, Fluoropolymer-Insulated, Copper or Copper Alloy.
MIL-L-23699	-	Lubricating Oil, Aircraft Turbine Engines, Synthetic Base.
MIL-C-25769	-	Cleaning Compound, Aircraft Surface, Alkaline Waterbase.
MIL-C-26074	-	Coatings, Electroless Nickel, Requirements for.
MIL-C-39029/4	-	Contacts, Electrical Connector, Pin, Crimp Removable, (For MIL-C-26482 Series 2, MIL-C-81703 Series 3, MIL-C-83733, and MIL-C-83723 Series 3 Connectors).
MIL-C-39029/5	-	Contacts, Electrical Connector, Socket, Crimp Removable, (For MIL-C-26482 Series 2, MIL-C-81703 Series 3, MIL-C-83723, and MIL-C-83733 Series 3 Connectors).
MIL-C-39029/9	-	Contacts, Electrical Connector, Pin, Crimp Removable, Thermocouple, (For MIL-C-26482 Series 2, MIL-C-81703 Series 3, MIL-C-83723 Series 3, and MIL-C-83733 Connectors).
MIL-C-39029/10	-	Contacts, Electrical Connector, Socket, Crimp Removable, Thermocouple, (For MIL-C-26482 Series 2, MIL-C-81703 Series 3, MIL-C-83723 Series 3, and MIL-C-83733 Connectors).
MIL-C-39029/50	-	Contacts, Electrical Connector, Pin, Crimp Removable, Shielded, (For MIL-C-83733 Connectors).
MIL-C-39029/51	-	Contacts, Electrical Connector, Socket, Crimp Removable, Shielded, (For MIL-C-83733 Connectors).
MIL-C-39029/57	-	Contacts, Electrical Connectors, Socket, Crimp Removable, (For MIL-C-24308, MIL-C-55302/68, /71, /72, /75, MIL-C-38999 Series II and MIL-C-83733 Connectors).
MIL-C-39029/58	-	Contacts, Electrical Connector, Pin, Crimp Removable, (For MIL-C-24038, MIL-C-55302/69, MIL-C-38999 Series I, II, III, IV, and MIL-C-83733 Connectors).
MIL-C-39029/71	-	Contacts, Electrical Connector, Pin, Removable, Solderless Wrap-Post Termination (For MIL-C-38999 Series II, MIL-C-24308, MIL-C-83733, and MIL-C-55302/69 Connectors.)
MIL-C-39029/72	-	Contacts, Electrical Connector, Socket, Removable, Solderless Wrappost Termination (For MIL-C-38999 Series I, II, III, and IV, MIL-C-24308, and MIL-C-55302/68, /71, and /75 Connectors).
MIL-G-45204	-	Gold Plating, Electrodeposited.
MIL-C-55330	-	Connectors, Preparation for Delivery of.
MIL-W-81381	-	Wire, Electric, Polyimide-Insulated, Copper or Copper Alloy.
MIL-I-81969/8	-	Installing and Removal Tools, Connector Electrical Contact, Types I and II, Class 2, Composition A.
MIL-I-81969/14	-	Installing and Removal Tools, Connector Electrical Contact, Type III, Class 2, Composition B.
MIL-C-83723	-	Connectors, Electrical, (Circular, Environment Resisting), Receptacles and Plugs.
MIL-C-85049	-	Connector Accessories, Electrical General Specification for.
MIL-C-85049/28	-	Connector Accessories, Electrical, Backshell, Non Environmental, Straight, Shield Termination, Category 3b (For MIL-C-83733 Connectors).
MIL-C-85049/44	-	Connector Accessories, Electrical, Strain Relief, Straight, Category 4c (For MIL-C-83733 Connectors).

(See Supplement 1A for list of associated specification sheets.)

Source: https://assist.dla.mil -- Downloaded: 2016-11-25T22:04Z
Check the source to verify that this is the current version before use.

STANDARDS

FEDERAL

FED-STD-H28 - Screw-Thread Standards for Federal Services.

MILITARY

MIL-STD-105 - Sampling Procedures and Tables for Inspection by Attributes.
MIL-STD-202 - Test Methods for Electronic and Electrical Component Parts.
MIL-STD-889 - Dissimilar Metals.
MIL-STD-1285 - Marking of Electrical and Electronic Parts.
MIL-STD-1344 - Test Methods for Electrical Connectors.
MIL-STD-1531 - Insert Arrangements for MIL-C-83733 Rack to Panel Connectors, Shell Size A.
MIL-STD-1532 - Insert Arrangements for MIL-C-83733 Rack to Panel Connectors, Shell Size B.
MIL-STD-45662 - Calibration Systems Requirements.
MS3461 - Test Gauge, MIL-C-26482 Series 2 or MIL-C-81703 Series 3 Contact Retention Feature.
MS24700 - Bushing, Fixed, Connector, Rack and Panel, Miniature.
MS27488 - Plug, Grommet Sealing, Electric Connector.
MS27495 - Tool, Contact, Connector Assembly and Disassembly.
MS27534 - Tool, Contact Insertion-Extraction, Electrical Connector.
MS51848 - Washer, Lock - Helical Spring, Hi-Collar.

(See Supplement 1A for list of MS sheet form standards).

(Copies of specifications and standards required by manufacturers in connection with specific acquisition functions should be obtained from the contracting activity or as directed by the contracting activity.)

2.1.2 Other publications. The following document forms a part of this specification to the extent specified herein Unless otherwise specified, the issues of the documents which are DOD adopted shall be those listed in the issue of the DODISS specified in the solicitation. Unless otherwise specified, the issues of documents not listed in the DODISS shall be the issue of the nongovernment documents which is current on the date of the solicitation.

AMERICAN NATIONAL STANDARDS INSTITUTE

ANSI B46 1-1962 - Surface Texture (Surface Roughness, Waviness and Lay).

(Application for copies should be addressed to the American National Standards Institute, Inc., 1430 Broadway, New York, NY 10018.)

(Nongovernment standards and other publications are normally available from the organizations which prepare or which distribute the documents. These documents also may be available in or through libraries or other informational services.)

2.1.3 Order of precedence. In the event of a conflict between the text of this specification and the references cited herein (except for associated detail specifications, specification sheets or MS standards), the text of this specification shall take precedence. Nothing in this specification, however, shall supersede applicable laws and regulations unless a specific exemption has been obtained.

3. REQUIREMENTS

3.1 Specification sheets. The individual item requirements shall be as specified herein and in accordance with the applicable specification sheets In the event of any conflict between requirements of this specification and the specification sheets, the latter shall govern (see 6.2).

Source: https://assist.dla.mil -- Downloaded: 2016-11-25T22:04Z
Check the source to verify that this is the current version before use.

3.2 Qualification. Connectors furnished under this specification shall be products which are qualified for listing on the applicable qualified products list at the time set for opening of bids (see 4.4 and 6.3).

3.3 Materials. Materials shall be as specified herein. When a definite material is not specified, a material shall be used which will enable the connectors to meet the performance requirements of this specification. Acceptance or approval of any constituent material shall not be construed as a guaranty of the acceptance of the finished product.

3.3.1 Dissimilar metals. When dissimilar metals are employed in intimate contact with each other, suitable protection against electrolytic corrosion shall be provided as specified in MIL-STD-889.

3.3.2 Non-magnetic material. All components, with the exception of screws, washers, and mounting hardware, shall be made from materials which are classified as non-magnetic, and the permeability of the basic connector shall be less than 2.0. The permeability shall be checked by the instrument described in MIL-I-17214 or equivalent.

3.3.3 Shells. The shells for classes R and S connectors shall be of high grade aluminum die casting alloy conforming to QQ-A-591. Other materials are permitted provided they meet the performance requirements of this specification and, in their finished form, occupy the same position in the galvanic series as the aluminum shell.

3.3.4 Finishes.

3.3.4.1 Finish for class R connectors. Aluminum parts shall be electroless nickel plated in accordance with MIL-C-26074, class 3 or 4, grade A. All other metal parts shall be made of corrosion-resistant materials or shall be protected to meet the performance requirements of this specification.

3.3.4.2 Finish for class S connectors. All metal parts for class S connectors shall be electroless nickel plated in accordance with MIL-C-26074, class 3 or 4, grade B. Finish shall be dull. Use of a suitable underplate is permissible. A silver underplate shall not be used.

3.4 Design and construction. Connectors shall be in accordance with the applicable specification sheet and shall be constructed to withstand normal handling incident to installation and maintenance in service. Mating and backend configuration and dimensions to insure intermateability shall be in accordance with figures 1 and 2.

3.4.1 Contacts. A quantity of power contacts consisting of the normal complement plus 1 spare contact of each applicable size for connector arrangements having 26 contacts or less, and 2 spare contacts where the number of contacts exceed 26, shall be included in each unit package. No spares shall be furnished for shielded contacts. For indirect shipments, connectors may be supplied without contacts (see 6.2). Power contacts shall be qualified for listing on the qualified products list for

Size 22D in accordance with MIL-C-39029/57 and MIL-C-39029/58
Size 20, 16, and 12 in accordance with MIL-C-39029/4 and MIL-C-39029/5

Shielded contacts shall be in accordance with MIL-C-39029/50 and MIL-C-39029/51.

3.4.1.1 Insertion and removal tools. The classes R and S connector design shall permit individual insertion and removal of the contacts without removing the insert or sealing members. Insertion of the contacts into and removal of the contacts from the insert shall be accomplished with the applicable tools as shown in MIL-I-81969/8 for size 22D contacts and MIL-I-81969/14 for sizes 20, 16, and 12.

3.4.1.2 Insert arrangement. The insert arrangement shall be in accordance with MIL-STD-1531 (shell size A) or MIL-STD-1532 (shell size B), as specified (see 3.1).

Source: https://assist.dla.mil -- Downloaded: 2016-11-25T22:04Z
Check the source to verify that this is the current version before use.

3.4.2 Sealing plugs. Insulated plugs shall be provided for sealing spare contact holes. Ten percent of the number of contacts, but not less than one sealing plug, shall be enclosed in the unit package. The sealing plugs shall be in accordance with MS27488. Connectors shall pass all tests required herein with any quantity of the contact holes sealed with plugs. The same sealing plug shall be used in both the plug and receptacle. For indirect shipments, connectors may be supplied without sealing plugs (see 6.2).

3.4.3 Inserts. The inserts shall be designed and constructed with proper sections and radii so that they will not readily chip, crack, or break in assembly or normal service. The inserts shall be nonremovable, mechanically retained, and bonded in the shell. The inserts shall be designed and constructed so as to eliminate all air paths between contacts and between contacts and shell. The insert engaging faces shall be designed and constructed so as to eliminate all air paths between contacts and between contacts and shells when the connectors are mated. The pin insert face shall be resilient and shall have individual raised sealing barriers around each pin contact with dimensions as shown on figure 2. The socket insert face shall be rigid dielectric and shall have individual chamfered holes at each contact location with dimensions as shown on figure 1, to provide seats for the pin insert individual sealing barriers and guidance for centering misaligned pin contacts when mating the connectors. The insert and wire sealing members of class R connectors shall be essentially one integral part, consisting of one or more parts bonded together so as to form essentially one integral piece and shall provide suitable sealing around the wires having diameters within the range shown in table I. The insert shall be designed so as to provide positive locking of individual contacts.

TABLE I. Contact size and wire range accommodations.

Contact size	Wire size accommodation	Wire range accommodation (diameter over insulation) Min	Max
		Inch	Inch
22D	28	.030	.060
22D	26	.030	.060
22D	24	.030	.060
22D	22	.031	.060
20	24	.040	.083
20	22	.040	.083
20	20	.040	.083
16	20	.063	.103
16	18	.063	.103
16	16	.063	.103
12	14	.081	.158
12	12	.081	.158
12 shielded	M17/094-RG179	---	---

3.4.4 Shell design. The connector shall be of the solid shell design and shall be constructed to positively retain inserts. The configuration shall be essentially rectangular as shown (see 3.1). The engaging skirts shall provide a keystone shape to preclude mating when either connector is rotated 180 degrees from the correct mating position. The engaging surfaces shall be configured to align the shells while mating to provide proper guidance for engagement of the pin and socket contacts.

3.4.4.1 Rack to panel mounting. Rack to panel connector shells shall be capable of being interchangeably mounted in a fixed or floating position as shown (see 3.1). Fixed mounted connectors shall mate properly with float mounted counterpart connectors. Shells shall be provided either with captive clinch nuts for fixed mounting, or shall be provided with or have provisions to allow installation of spring mounts, bushings, or guide pins as specified (see 3.1).

3.4.4.2 Shell peripheral seal. A nonremovable integral resilient peripheral seal shall be provided in the receptacle shell. The seal shall engage the mating plug shell before mating is completed.

Source: https://assist.dla.mil -- Downloaded: 2016-11-25T22:04Z
Check the source to verify that this is the current version before use.

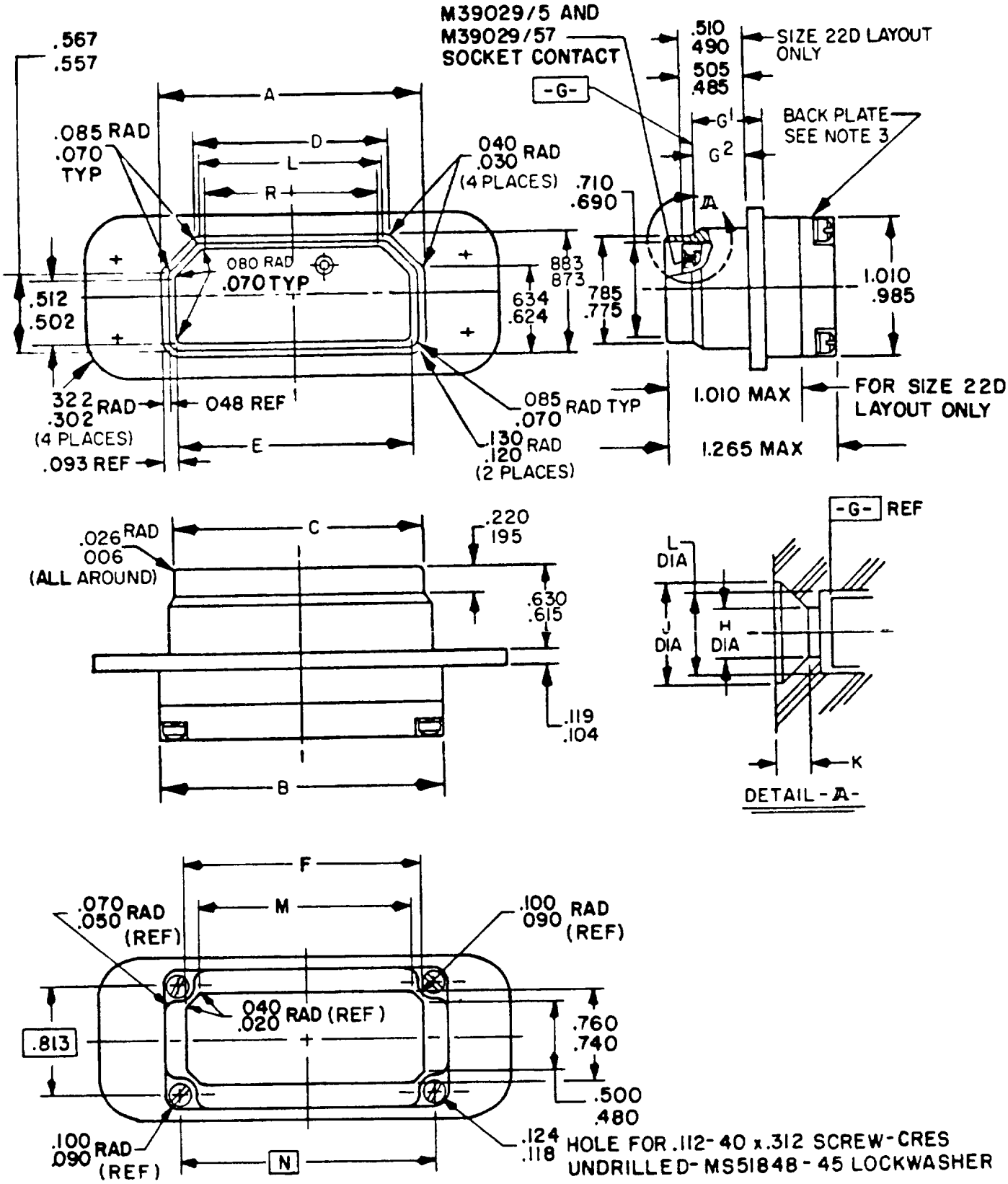

FIGURE 1 Connector, plug interface and backend dimensions.

Source: https://assist.dla.mil -- Downloaded: 2016-11-25T22:04Z
Check the source to verify that this is the current version before use.

Interface and backend dimensions

Shell size	A	B	C	D	E	F	M	I	L	R
A	1 959 1.946	2 086 2 055	1.864 1.853	1 460 1 450	1 780 1.763	1 825 1.815	1 585 1 560	1 890	1 426 1 412	1 386 1.373
B	3.259 3 246	3 386 3 355	3 164 3 153	2 760 2 750	3 080 3 063	3 125 3 115	2 875 2 865	3 190	2 726 2 712	2 686 2.673

Contact entry dimensions

Contact size	G1	G2	H Dia	J Dia	K	L Dia
22D	.591 .533	.472 .429	.038 .035	.065 .063	.016 .012	066 .064
20	.537 .497	.419 .392	.053 .051	.118 .114	.048 040	.085 .083
16	.537 .497	419 .393	.075 .073	.150 .146	.048 040	.120 .118
12	.537 .497	.419 393	.102 .100	.210 .206	.048 040	.172 .170

NOTES:
1. Dimensions are in inches.
2. All dimensions are after plating.
3. Back plate is not applicable to -131 and -185 layouts.
4. Dimensions are symmetrical about ℄ within .006 T.I.R.

FIGURE 1. Connector, plug, interface and backend dimensions - Continued.

Source: https://assist.dla.mil -- Downloaded: 2016-11-25T22:04Z
Check the source to verify that this is the current version before use.

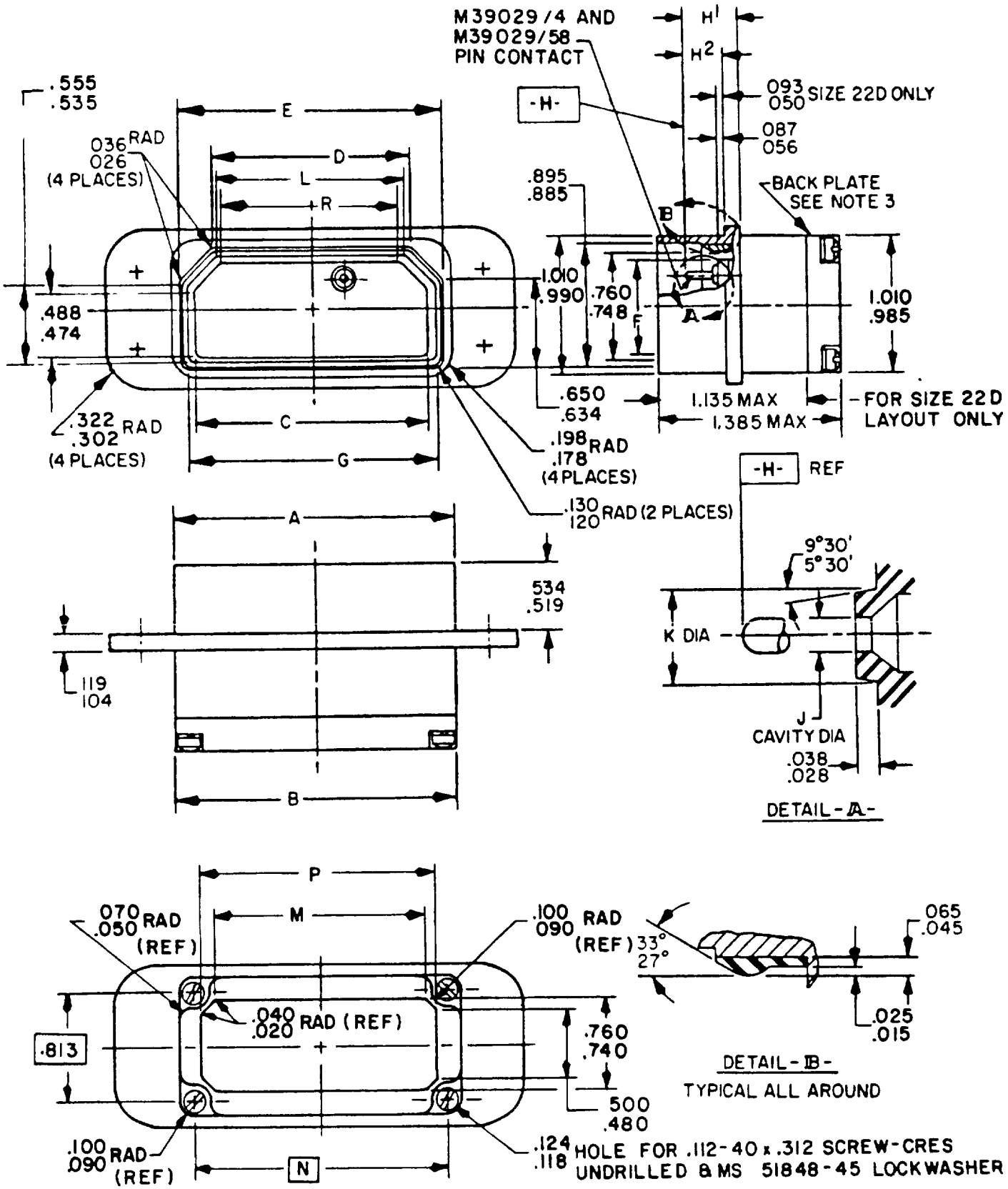

FIGURE 2 Connector, receptacle, interface and backend dimensions

Source: https://assist.dla.mil -- Downloaded: 2016-11-25T22:04Z
Check the source to verify that this is the current version before use.

Interface and backend dimensions

Shell size	A	B	C	D	E	F	G	M	N	P	L	R
A	2 085 2 072	2 086 2 055	1.758 1 725	1 485 1 460	1 976 1 961	687 667	1 845 1 825	1 580 1 560	1 890	1 825 1 815	1 420 1 400	1 370 1 330
B	3 385 3 372	3.386 3 355	3 058 3.025	2 785 2 760	3 271 3 261	.687 667	3.145 3 112	2.880 2 860	3 190	3 125 3 115	2.720 2.700	2 670 2 630

Contact entry dimensions

Contact size	Pin length		J Dia	K Dia
	H1	H2		
22D	.383 .336	.267 .230	.028 .025	.077 .071
20	.416 .374	.300 .268	.039 .036	.112 .106
16	.416 .374	.300 .268	.061 .058	.144 .138
12	.416 .374	.300 .268	.093 .090	.204 .198

NOTES
1 Dimensions are in inches
2 All dimensions are after plating
3 Back plate is not applicable to -131 and -185 layouts
4 Dimensions are symmetrical about G_L within .006 T I.R
5 Interfacial seal dimensions = C-E-R
6 Peripheral seal dimensions = G & L

FIGURE 2 Connector, receptacle, interface and backend dimensions - Continued.

Source: https://assist.dla.mil -- Downloaded: 2016-11-25T22:04Z
Check the source to verify that this is the current version before use.

3.4.5 Backplate. When compressed about the wires and contacts by the backplate, the sealing member shall not distort or bind any of the contacts to cause improper operation of the connector.

3.4.6 Screw threads. Screw threads shall be in accordance with FED-STD-H28.

3.5 Marking. Connectors shall be marked in accordance with MIL-STD-1285. All letters and numbers shall be a minimum of .046875 inch in height. For indirect shipments of connectors without contacts, the complete military part number of the connector with contacts shall be marked on the connector.

3.5.1 Contact identification. The contact positions shall be designed on the front and rear of the inserts as shown in MIL-STD-1531 (shell size A) or MIL-STD-1532 (shell size B). Designators shall be legible. Where space limitations render legibility or proper functioning of the connector impossible, or where such designations may render possible confusion between contacts, contact position designations may be omitted after the grid pattern has been established. Location of identifying characters shall be in close proximity to the holes but need not be placed exactly where indicated on the standard.

3.6 Performance. The class R connectors shall be mounted and mated as shown on figure 3 unless otherwise specified, and shall perform as follows when subjected to the environments and tests specified.

3.6.1 Maintenance aging. When tested as specified in 4.6.2, connectors shall meet the requirements of 3.6.3, 3.6.22, and all subsequent required tests.

3.6.2 Temperature cycling. When tested as specified in 4.6.3, there shall be no evidence of cracking, fracture, or other damage detrimental to the operation of the connector.

3.6.3 Mating and unmating forces. When tested as specified in 4.6.4, the axial force required to fully mate or separate the plug and receptacle shall not exceed the applicable value listed in table II.

TABLE II. Mating force.

Shell size	Maximum force (pounds)	
	Without mounting accessories	Spring 1/ mounting
A	70	176
B	95	176

1/ For connectors using spring mounting, the mating force becomes a function of the spring loading. Values listed apply to connectors mounted as shown on figure 3 at minimum panel spacing.

3.6.4 Altitude immersion. When tested as specified in 4.6.5, connectors shall maintain an insulation resistance of at least 1,000 megohms and shall withstand a dielectric withstanding voltage of 1,000 volts rms at sea level for service rating M, and 1,500 volts rms at sea level for service rating I.

3.6.5 Insert retention. When tested as specified in 4.6.6, completely assembled and unmated connectors shall withstand an axial load of 45 pounds per square inch gauge (psig) applied to the mating face for a period of at least 5 seconds without being dislocated from their normal position in the shell, cracking or breaking.

3.6.6 Salt spray (corrosion). When tested as specified in 4.6.7, connectors and contacts shall show no exposure of basic metal due to corrosion which will adversely affect performance.

3.6.7 Contact resistance. When tested as specified in 4.6.8, the contact resistance (millivolt drop) for class R connectors shall not exceed the values listed in table III.

Source: https://assist.dla.mil -- Downloaded: 2016-11-25T22:04Z
Check the source to verify that this is the current version before use.

TABLE III. Contact resistance (millivolt drop).

Contact size	Wire size	Maximum voltage drop (millivolts)				Test current (amperes)
		Silver plated wire		Nickel plated wire		
		25° +3°C -0°	200° +3°C -0°	25° +3°C -0°	200° +3°C -0°	
22D	28	54	92	81	138	1.0
22D	26	52	89	80	137	2.0
22D	24	45	77	68	116	3.0
22D	22	73	125	110	188	5.0
20	24	45	77	68	116	3.0
20	22	73	125	110	188	5.0
20	20	55	94	83	141	7.5
16	20	46	79	69	119	7.5
16	18	46	79	69	119	7.5
16	16	49	84	74	126	13.0
12	14	40	68	60	102	17.0
12	12	42	71	63	107	23.0

3.6.8 Gauge location. When tested as specified in 4.6.9, the axial location of contacts shall be measured using test gauges conforming to figure 4 or 5, or MS3461, as applicable. Gauge location measurements shall fall within the range specified on figure 1 or 2, as applicable.

3.6.9 Pin contact stability. When tested as specified in 4.6.10, the total displacement of the contact tip end shall not exceed the applicable limit specified in table IV.

TABLE IV. Pin contact stability.

Pin size	Total displacement
	Inch
22D	.030
20	.026
16	.028
12	.030

3.6.10 Gauge retention. When tested as specified in 4.6.11, test gauges conforming to figure 4 or 5, or MS3461, as applicable, shall be retained in the contact cavities of crimp contact connectors. The axial displacement of the test gauge while under load shall not exceed .012 inch.

3.6.11 Magnetic permeability. When tested as specified in 4.6.12, the relative permeability of the basic connector assembly shall be less than 2.0.

3.6.12 Contact retention. When tested as specified in 4.6.13, the individual contact-locking mechanism of unmated connectors shall withstand, in both directions, the axial load specified in table V. During the test, the axial displacement of the contact shall not exceed .012 inch when pressures are applied from the face side.

Source: https://assist.dla.mil -- Downloaded: 2016-11-25T22:04Z
Check the source to verify that this is the current version before use.

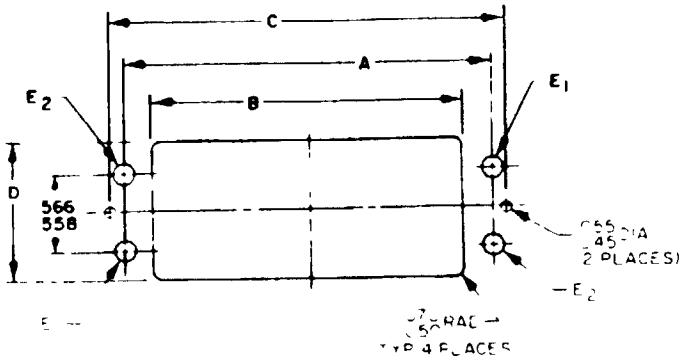

FIGURE 3a Panel cut-out dimensions

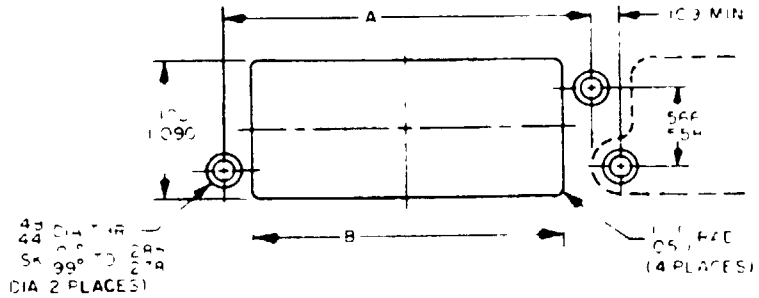

FIGURE 3c Panel cut-out dimensions

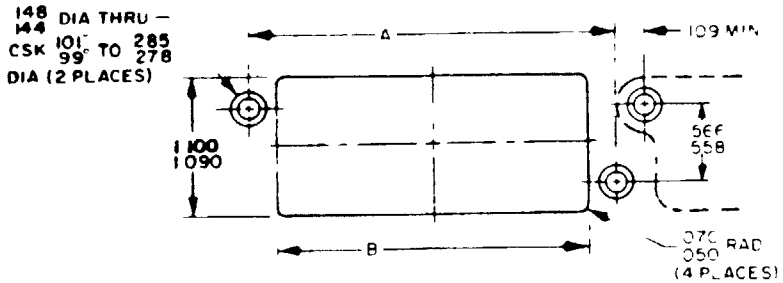

FIGURE 3b Panel cut-out dimensions

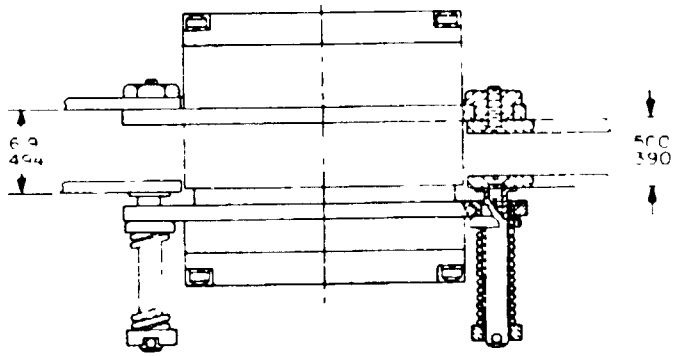

FIGURE 3d Recommended panel spacing (MIL-C-83733 4, 5, 6, 7, and 10)

Specification sheet No MIL-C-83733	Figure ref	Dimensions (in inches) A ± 004		B ± 005		C ± 005		D ± 005		E1		E2	
		Shell size A	Shell size B	Shell size A	Shell size B	Shell size A	Shell size B	Shell size A	Shell size B	Shell size A	Shell size B	Shell size A	Shell size B
1, 5, 6 - - - -	3a	2 578	3 875	2 103	3 400	2 765	4 062	1 022	1 022	148/144	148/144	148/144	148/144
2 - - - - - - - -	3a	---	3 875	---	3 465	---	4 062	---	1 095	---	148/144	---	260/250
3 - - - - - - - -	3a	---	3 875	---	3 465	---	4 062	---	1 095	---	320/315	---	148/144
4 - - - - - - - -	3a	2 578	3 875	2 167	3 465	2 765	4 062	1 095	1 095	148/144	148/144	148/144	148/144
7 - - - - - - - -	3a	2 578	3 875	2 167	3 465	2 765	4 062	1 095	1 095	148/144	148/144	430/420	430/420
8 - - - - - - - -	3a	---	3 875	---	3 465	---	4 062	---	1 095	---	380/370	--	148/144
9, 10, 11 - - -	3c	2 570	3 875	2 167	3 465	---	---	1 095	1 022	---	---	---	---
12 - - - - - - - -	3b	2 578	3 875	2.095	3 400	---	---	1 095	1 095	---	---	---	-

FIGURE 3 Panel cut-out dimensions and recommended panel spacing

Source: https://assist.dla.mil -- Downloaded: 2016-11-25T22:04Z
Check the source to verify that this is the current version before use.

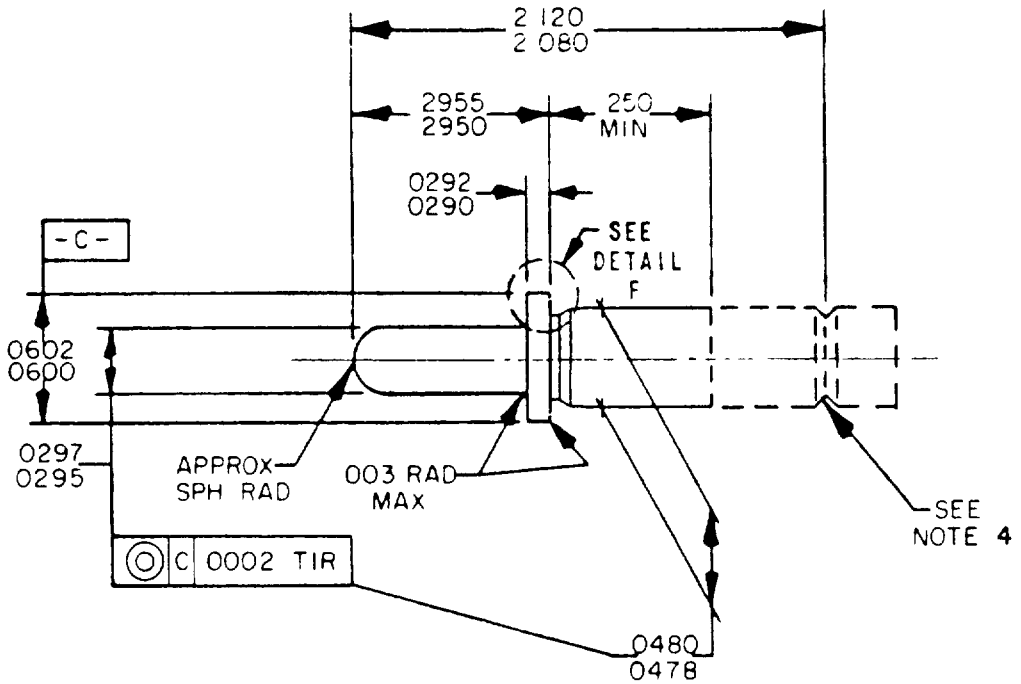

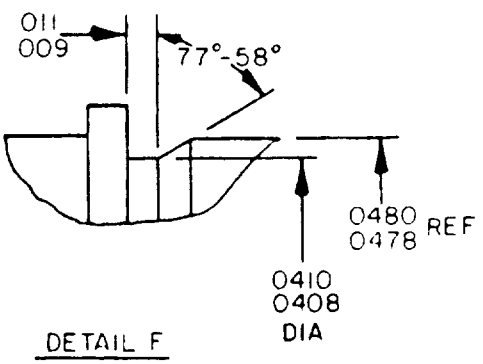

NOTES
1 Dimensions are in inches
2 Material Hardened tool steel
3 Finish 32-microinch polished
4 Design of rear extension is optional, but must have a groove provided as indicated

FIGURE 4 Test gauge, pin, gauge location and retention (contact size 22D)

Source: https://assist.dla.mil -- Downloaded: 2016-11-25T22:04Z
Check the source to verify that this is the current version before use.

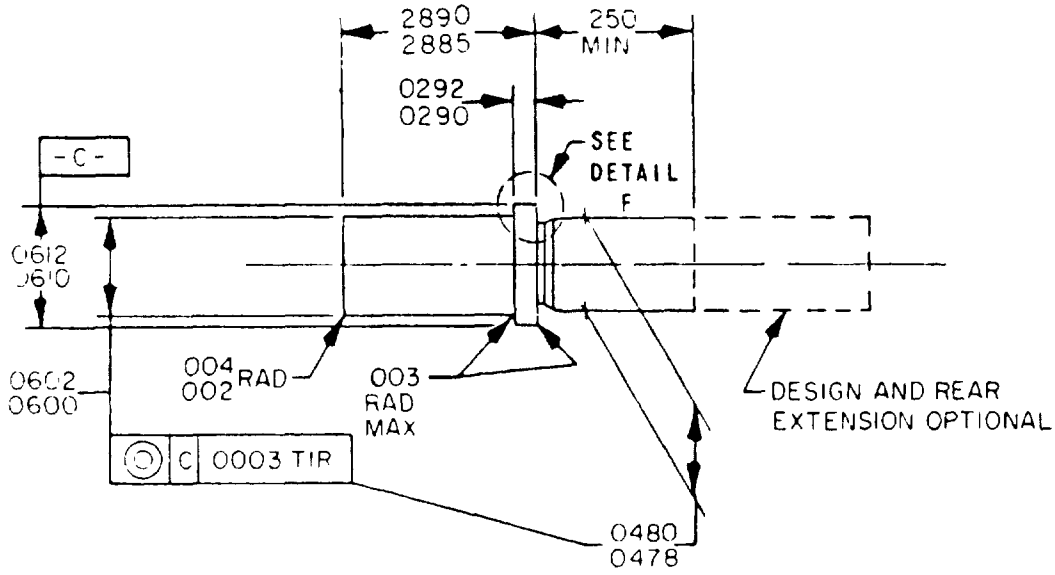

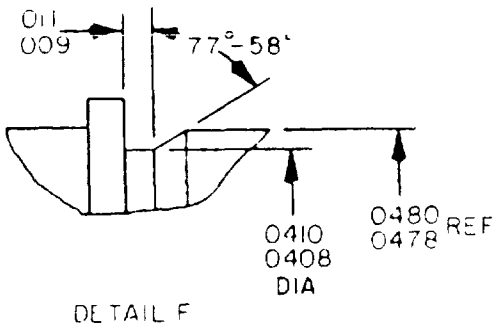

DETAIL F

NOTES
1 Dimensions are in inches
2 Material Hardened tool steel
3 Finish 32-microinch polished

FIGURE 5 Test gauge, socket, gauge location and retention (contact size 22D)

Source: https://assist.dla.mil -- Downloaded: 2016-11-25T22:04Z
Check the source to verify that this is the current version before use.

TABLE V. Axial load.

Contact size	Axial load
	Pounds
22D	10 ±1
20	20 +3, -0
16	25 +3, -0
12	30 +3, -0

3.6.13 Altitude - low temperature. When tested as specified in 4.6.14, connectors shall withstand a dielectric withstanding voltage of 625 volts rms after stabilizing at an atmospheric pressure equivalent to an altitude of 80,000 feet and a temperature of -54° +4°, -0°C.

3.6.14 Insulation resistance.

3.6.14.1 At ambient temperature. When tested as specified in 4.6.15.1, the insulation resistance of connectors shall be greater than 5,000 megohms when measured separately between pairs of contacts and between the shell and any contact.

3.6.14.2 At elevated temperature. When tested as specified in 4.6.15.2, the insulation resistance of connectors shall be greater than 200 megohms when measured separately between any two contacts and between the shell and any contact.

3.6.15 Dielectric withstanding voltage.

3.6.15.1 Dielectric withstanding voltage. When tested as specified in 4.6.16.1, connectors shall show no evidence of breakdown or flashover.

3 6.15.2 Dielectric withstanding voltage, altitude When tested as specified in 4.6.16.2, completely wired and assembled connectors shall show no evidence of breakdown or flashover.

3.6.16 Durability. When tested as specified in 4.6.17, mated pairs of fully assembled connectors shall meet the subsequent test requirements listed in table VII.

3.6.17 Random vibration. When tested as specified in 4.6.18, connectors shall not crack or break and there shall be no loosening of parts. Connectors shall be in full engagement during vibration. Interruption of electrical continuity shall be not longer than 1.0 microsecond.

3.6.18 Shock (specified pulse). During and after the test specified in 4.6.19, connectors shall show no sign of damage.

3.6.19 Humidity. During and after the test specified in 4.6.20, the insulation resistance shall be not less than 100 megohms.

3.6.20 Ozone exposure. When tested as specified in 4.6.21, connectors shall show no evidence of cracking of materials or other damage which will adversely affect subsequent performance in the qualification test sequence.

3.6.21 Fluid immersion. When tested as specified in 4.6.22, connectors shall meet the subsequent test requirements listed in table VII.

3.6.21.1 Retention system fluid exposure. When tested as specified in 4.6.22.1, connectors shall meet the requirements of 3.6.10. Effects of fluids on resilient sealing members shall not be a consideration of this test.

3.6.22 Contact insertion and removal forces. When tested as specified in 4.6.23, the individual contact insertion force shall not exceed 15 pounds and the removal force shall not exceed 10 pounds. Contacts shall be wired using wire specified in table VI. The applicable tool specified in 3.4.1.1 shall be used for this test.

Source: https://assist.dla.mil -- Downloaded: 2016-11-25T22:04Z
Check the source to verify that this is the current version before use.

3.6.23 Contact walkout. When tested as specified in 4.6.24, contacts shall not become dislodged from their normal position.

3.6.24 Insertion removal tool abuse. When tested as specified in 4.6.25, there shall be no damage to the contacts, the connector insert, or the contact retainer mechanism The connectors shall meet the requirements of subsequent testing.

3.6.25 Temperature life with contact loading. When tested as specified in 4.6 26, contacts shall maintain their specified locations as shown on figure 1 or 2, as applicable, and there shall be no electrical discontinuity in excess of 1.0 microsecond.

3.7 Interchangeability. All complete connectors, including their complement of contacts, having the same part number shall be completely interchangeable with each other with respect to installation (physical) and performance (function) as specified herein.

3.8 Workmanship. Connectors shall be in accordance with the requirements of this specification and shall be free from defects which will affect life, serviceability, or appearance. All corners shall be broken and smooth. Shell surfaces shall be free from blow holes, burrs, and cracks.

4. QUALITY ASSURANCE PROVISIONS

4.1 Responsibility for inspection. Unless otherwise specified in the contact or purchase order, the supplier is responsible for the performance of all inspection requirements as specified herein. Except as otherwise specified in the contract or order, the supplier may use his own or any other facilities suitable for the performance of the inspection requirements specified herein, unless disapproved by the Government. The Government reserves the right to perform any of the inspections set forth in the specification where such inspections are deemed necessary to assure supplies and services conform to prescribed requirements.

4.1.1 Responsibility for compliance. All items must meet all requirements of sections 3 and 5. The inspections set forth in this specification shall become a part of the contractor's overall inspection system or quality program. The absence of any inspection requirements in the specification shall not relieve the contractor of the responsibility of assuring that all products or supplies submitted to the Government for acceptance comply with all requirements of the contract. Sampling in quality conformance does not authorize submission of known defective material, either indicated or actual, nor does it commit the Government to acceptance of defective material.

4.1.2 Test equipment and inspection facilities. Test and measuring equipment and inspection facilities of sufficient accuracy, quality and quantity to permit performance of the required inspection shall be established and maintained by the supplier The establishment and maintenance of a calibration system to control the accuracy of the measuring and test equipment shall be in accordance with MIL-STD-45662.

4.2 Classification of inspections. The inspections specified herein are classified as follows

a. Qualification inspection (see 4.4).

b. Quality conformance inspection (see 4.5).

4.3 Inspection conditions. Unless otherwise specified herein, all inspections shall be performed in accordance with the test conditions specified in the "GENERAL REQUIREMENTS" of MIL-STD-1344.

Source: https://assist.dla.mil -- Downloaded: 2016-11-25T22:04Z
Check the source to verify that this is the current version before use.

4.4 Qualification inspection. Qualification inspection shall be performed at a laboratory acceptable to the Government (see 6.3) on sample units produced with equipment and procedures normally used in production.

4.4.1 Sample size and inspection routine. The number of connectors and the inspection to which they shall be subjected shall be as follows

a A minimum of two complete mating pairs of connectors of each shell size, with insert arrangements containing power contacts of all sizes for which qualification is desired, shall be wired with minimum diameter wire of table VI and mounted in accordance with figure 3. Mating connector samples shall be divided into two similar groups. One group shall be subjected to the tests of group 1, table VII, in the sequence indicated. The other group shall be subjected to the tests of group 2, table VII, in the sequence indicated.

b. A minimum of two complete mating pairs of connectors of each shell size, with insert arrangements containing power contacts of all sizes for which qualification is desired, shall be wired with the maximum diameter wire of table VI and mounted in accordance with figure 3. Mating connector samples shall be divided into two similar groups. One group shall be subjected to the tests of group 1, table VII, in the sequence indicated. The other group shall be subjected to the tests of group 2, table VII, in the sequence indicated.

c. Twelve mated pairs of connectors, representing both shell sizes in any insert arrangement, shall be terminated with nominal gauge wire and mounted in accordance with figure 3. The connectors shall be subjected to the tests of group 3, table VII, in the sequence indicated.

d. Twelve mated pairs of connectors representing both shell sizes in any insert arrangement providing a minimum of 21 contact cavities of each appropriate contact size, shall be terminated with nominal gauge wire and mounted in accordance with figure 3. The connectors shall be subjected to the tests of group 4, table VII, in the sequence indicated.

TABLE VI. Test wire sizes.

Contact size	Maximum wire	Minimum wire
22D	M22759/11-22	M81381/7-26 M81381/9-26
20	M22759/9-20	M81381/7-22 through /10-22 M81381/11-24 through /14-24
16	M22759/9-16 M22759/10-16	M81381/11-16 M81381/12-16
12	M22759/9-12 M22759/10-12	M81381/7-12 or /8-12 M81381/11-12 or /12-12
12 shielded	M17/094-RG179	---

4.4.2 Preparation of samples. Preparation of test samples shall be in accordance with 4 4.1. Mated connectors shall be as shown on figure 3.

4.4.3 Failures. One or more failures shall be cause for refusal to grant qualification approval

Source: https://assist.dla.mil -- Downloaded: 2016-11-25T22:04Z
Check the source to verify that this is the current version before use.

TABLE VII. Qualification inspection.

Inspection	Requirement paragraph	Test paragraph
Group 1		
Inspection of product	3.1,3.3,3.4,3.5,3.7, and 3.8	4.6.1
Maintenance aging	3.6.1	4.6.2
Thermal shock	3.6.2	4.6.3
Mating and unmating forces	3.6.3	4.6.4
Altitude immersion 1/	3.6.4	4.6.5
Insert retention	3.6.5	4.6.6
Salt spray (corrosion)	3.6.6	4.6.7
Mating and unmating forces	3.6.3	4.6.4
Contact resistance	3.6.7	4.6.8
Post test inspection	---	4.6.27
Group 2		
Inspection of product	3.1,3.3,3.4,3.5,3 7, and 3.8	4.6.1
Gauge location	3.6.8	4.6.9
Gauge retention	3.6.10	4.6.11
Maintenance aging	3.6.1	4.6.2
Magnetic permeability	3.6.11	4.6.12
Contact retention 2/	3.6.12	4.6.13
Altitude - low temperature	3.6.13	4.6.14
Insulation resistance at ambient temperature	3.6.14.1	4.6.15.1
Thermal shock	3.6.2	4.6.3
Mating and unmating forces	3.6.3	4.6.4
Insulation resistance at elevated temperature	3.6.14.2	4.6.15.2
Dielectric withstanding voltage	3.6.15.1	4.6.16.1
Dielectric withstanding voltage at altitude 1/	3.6.15.2	4.6.16.2
Durability	3.6.16	4.6.17
Random vibration 1/	3.6.17	4.6.18
Shock (specified pulse)	3.6.18	4.6.19
Humidity	3.6.19	4.6.20
Contact retention 3/	3.6.12	4.6.13
Post test inspection	---	4.6.27
Group 3 (Dielectrics)		
Inspection of product	3.4 and 3.5	4.6.1
Ozone exposure	3.6.20	4.6.21
Insulation resistance at ambient temperature	3.6.14.1	4.6.15.1
Dielectric withstanding voltage	3.6.15.1	4.6.16.1
Fluid immersion (one mated pair per fluid)	3.6.21	4.6.22
Mating and unmating forces	3.6.3	4.6.4
Post test inspection	---	4.6.27
Group 4 (Retention system)		
Inspection of product	3.4 and 3.5	4.6.1
Contact walkout	3.6.23	4.6.24
Inspection removal tool abuse 1/	3.6.24	4.6.25
Pin contact stability	3.6.9	4.6.10
Retention system fluid exposure (one mated pair per fluid)	3.6.21.1	4.6.22.1
Temperature life with contact loading 1/	3.6.25	4.6.26
Gauge retention	3.6.10	4.6.11
Contact insertion and removal forces	3.6.22	4.6.23
Insert retention	3.6.5	4.6.6
Post test inspection	---	4.6.27

1/ Original qualification only.
2/ Load from front only.
3/ Load from both directions.

Source: https://assist.dla.mil -- Downloaded: 2016-11-25T22:04Z
Check the source to verify that this is the current version before use.

4.4.4 Retention of qualification. To retain qualification, the manufacturer shall forward a report at 9-month intervals to the qualifying activity. The qualifying activity shall establish the initial reporting date. The report shall consist of:

a. A summary of the results of the tests performed for periodic 9-month inspection.

b. A summary of the results of tests performed for 18-month requalification inspection, when applicable, including the number and mode of failures. The summary shall include results of the 9-month inspection tests performed and completed during the reporting period. If the summary of the test results indicates nonconformance with specification requirements, and corrective action acceptable to the qualifying activity has not been taken, action may be taken to remove the failing product from the qualified products lists.

(1) Failure to submit the report within 30 days after the end of each reporting period may result in loss of qualification for the product. In addition to the periodic submission of inspection data, the supplier shall immediately notify the qualifying activity at any time during the reporting period that the inspection data indicates failure of the qualified product to meet the requirements of this specification.

(2) In the event that no production occurred during the reporting period, a report shall be submitted certifying that the company still has the capabilities and facilities necessary to produce the item. If during two consecutive reporting periods there has been no production, the manufacturer may be required, at the discretion of the qualifying activity to submit connectors (a representative product of each type, size, class, etc.,) to testing in accordance with the qualification inspection requirements.

4.5 Quality conformance inspection.

4.5.1 Inspection of product for delivery. Inspection of product for delivery shall consist of group A inspection.

4.5.1 1 Inspection lot. An inspection lot shall consist of all connectors of the same part number, produced under essentially the same conditions, and offered for inspection at one time.

4.5.1.2 Group A inspection. Group A inspection shall consist of the inspections specified in 4.6.1 and the dielectric withstanding voltage test specified in 4.6.16.1.

4 5.1.2.1 Sampling plan. For the inspection of product specified in 4.6.1, statistical sampling shall be in accordance with MIL-STD-105 for general inspection level II. The acceptable quality level (AQL) shall be 1 0 percent for major defects and 4.0 percent for minor defects. Inspection shall be conducted on 100 percent of the samples in the lot for dielectric withstanding voltage. With approval of the qualifying activity, in-process inspection of the integral insert assembly after all bonding operations may be submitted for this requirement. Major and minor defects shall be as described in table VIII.

TABLE VIII. Defects.

Major	Minor
Inability to mate with counterpart	Poor exterior finish
Incorrect sealing rings	Sealing member flash
Incorrect wire entry hole	Incorrect exterior or outline dimensions not preventing engagement or mounting
Improper sealing member or connector dimensions preventing sealing	Omission of identification markings
Defective insert	
Missing or defective contact-locking device	
Incorrect marking	
Piece part missing	
Material	
Electrical defects	

Source: https://assist.dla.mil -- Downloaded: 2016-11-25T22:04Z
Check the source to verify that this is the current version before use.

4.5.1.2.2 Rejected lots. If an inspection lot is rejected, the manufacturer may rework it to correct the defects, or screen out the defective units, and resubmit for reinspection. Resubmitted lots shall be inspected using tightened inspection. Such lots shall be separate from new lots, and shall be clearly identified as reinspected lots. Before resubmission of the lot by the manufacturer for acceptance, the contractor shall fully explain to the acquiring activity both the cause of previous failures and corrections made on the screened lot. Connectors rejected after reinspection shall not be resubmitted, without specific approval of the acquiring activity. The contractor shall be required, at the discretion of the acquiring activity, to show evidence of corrective action in current production.

4.5.1.3 Group B inspection (periodic). Periodic inspection shall consist of a 9-month inspection and an 18-month requalification.

4.5.1.3.1 9-month inspection. Connectors shall be selected at random during each 9-month integrated production period as follows.

a. One mated pair of connectors containing a high density insert arrangement (-131 or -185) shall be terminated and mounted in accordance with 4.4.1a. The connectors shall be subjected to the tests of sample 1, table IX.

b. One mated pair of connectors containing a high density insert arrangement (-131 or -185) shall be terminated and mounted in accordance with 4.4.1b. These connectors shall be subjected to the tests of sample 2, table IX.

c. A minimum of one mated pair of connectors containing a typical insert arrangement representing two or more contact sizes shall be terminated and mounted in accordance with 4.4.1d. The connectors shall be subjected to the tests of sample 3, table IX.

d. Two mated pairs of connectors containing any representative insert arrangement shall be terminated and mounted in accordance with 4.4.1c. One mated pair shall be subjected to the tests of sample 4, table IX. The other mated pair shall be subjected to the tests of sample 5, table IX.

TABLE IX. Nine-month periodic inspection.

Inspection	Requirement paragraph	Method paragraph	Sample number 1	2	3	4	5
Inspection of product- - - - -	3.4, 3.5	4.6.1	X	X	X	X	X
Insulation resistance at ambient temperature- - - - -	3.6.14.1	4.6.15.1	X	X	X	X	X
Dielectric withstanding voltage	3.6.15.1	4.6.16.1	X	X	X	X	X
Humidity - - - - - - - - - - - -	3.6.19	4.6.20	X	X			
Temperature life with contact loading (250 hours)- - - - -	3.6.25	4.6.26			X		
Insert retention - - - - - - - -	3.6.5	4.6.6			X		
Fluid immersion (MIL-H-5606) -	3.6.21	4.6.22				X	
Fluid immersion (MIL-T-5624, JP-5)- - - - - - - - - - - - -	3.6.21	4.6.22					X
Mating and unmating forces - -	3.6.3	4.6.4				X	X
Post test inspection - - - - -	---	4.6.27	X	X	X	X	X

4.5.1.3.2 18-month requalification. Requalification inspection shall be performed in accordance with table VII on current production samples at least once each 18 months of integrated production time.

Source: https://assist.dla.mil -- Downloaded: 2016-11-25T22:04Z
Check the source to verify that this is the current version before use.

4.5.1.3.3 Noncompliance. If a sample fails to pass group B inspection, the manufacturer shall take corrective action on the materials or processes, or both, as warranted, and on all units of product which can be corrected and which were manufactured under essentially the same conditions, with essentially the same materials, processes, etc., and which are considered subject to the same failure. Acceptance of the product shall be discontinued until corrective action, acceptable to the Government, has been taken. After the corrective action has been taken, group B inspection shall be repeated on additional sample units (all inspections, or the inspection which the original sample failed, at the option of the Government). Group A inspection may be reinstituted; however, final acceptance shall be withheld until the group B reinspection has shown that the corrective action was successful. In the event of failure after reinspection, information concerning the failure and corrective action taken shall be furnished to the cognizant inspection activity and the qualifying activity.

4.6 Test methods.

4.6.1 Inspection of product. Connectors and associated hardware shall be inspected to verify that the design, construction, physical dimensions, marking, interchangeability, and workmanship are in accordance with the applicable requirements (see 3.1, 3.3, 3.4, 3.5, 3.7, and 3.8).

4.6.2 Maintenance aging (see 3.6.1). Each contact shall be inserted, removed, and reinserted using applicable insertion and removal tools. The connector shall be mated and unmated 10 times and at least 10 of the contacts in both plugs an receptacles shall be removed and inserted 9 times, using applicable insertion and removal tools. The force measurements required by 4.6.23 shall be made on the third insertion of 5 contacts of each of the connectors.

4.6.3 Temperature cycling (see 3.6.2). Wired, mated connectors shall be subjected to temperature cycling in accordance with method 1003 of MIL-STD-1344, test condition A, except the minimum temperature shall be -65° +0°, -3°C and the maximum temperature shall be 200° +3°, -0°C. Upon completion of the last cycle, the connectors shall be returned to room temperature for inspection and additional tests specified in table VII.

4.6.4 Mating and unmating forces (see 3.6.3). Mating and unmating forces shall be measured in accordance with method 2013 of MIL-STD-1344. The following details and exceptions shall apply:

a. Special mounting means - See MIL-STD-1344.

b. Force or torque requirements - See table II.

c. Lubrication - None.

d. Wire type, gauge, and length - See table VI and 4.4.1; length optional.

e. Rate of mating and unmating - Maximum of 10 seconds for each operation.

f. Definition of mating parameter - Mating dimensions are as shown on figure 3.

g. Applicable hardware - All hardware furnished with connector.

h. Test conditions - Standard ambient.

4.6.5 Altitude immersion (see 3.6.4). Mated connectors shall be tested in accordance with method 1004 of MIL-STD-1344. The following details shall apply:

a. All wire ends shall be located within the chamber and exposed to the chamber atmosphere, but not submerged or sealed.

b. At the end of the third cycle while the connectors are still submerged in the solution, the insulation resistance shall be measured as specified in 4.6.15.1 and the dielectric withstanding voltage test shall be performed as specified in 4.6.16.1.

Source: https://assist.dla.mil -- Downloaded: 2016-11-25T22:04Z
Check the source to verify that this is the current version before use.

4.6.6 Insert retention (see 3.6.5). Insert faces of unmated connectors shall be tested in accordance with method 2010 of MIL-STD-1344 to a pressure of 45 psig.

4.6.7 Salt spray (corrosion) (see 3.6.6). Unmated connectors shall be tested in accordance with method 1001 of MIL-STD-1344. The following detail and exception shall apply

a Test condition letter - B.

b. The samples shall not be mounted but shall be suspended using waxed twine (or string), glass rods, or glass cord.

4.6.8 Contact resistance (see 3.6.7). Contact resistance shall be measured in accordance with method 3004 of MIL-STD-1344. Twenty percent, but not less than three contacts of the mated connectors, shall be tested. The following details and exceptions shall apply

a. Test sample preparation shall be in accordance with MIL-STD-1344.

b. Wire size and type - See table VI and 4.4.1.

c. Test current shall be as specified herein.

d. Millivolt drop - See table III.

e. Preconditioning and special environment - Samples shall be tested at +25°C and +200°C

4.6.9 Gauge location (see 3.6.8). Applicable test gauges shall be installed in three randomly selected cavities of each contact size in each connector. With the gauges fully seated against the contact retention device, the axial location of the front of the gauges shall be measured relative to the reference plane indicated on figure 1 or 2, as applicable.

4.6.10 Pin contact stability (see 3.6.9). Ten percent of the pin contact cavities of each size in each unmated connector shall be subjected to this test. Test gauges conforming to figure 4 or MS3461, as applicable, shall be installed in the connector and the connector held rigidly in a suitable fixture. A moment shall be applied to the exposed rod as shown on figure 6. The rate of moment application shall not exceed 1 pound per minute. The total pin tip displacement shall be measured as shown on figure 6

4.6.11 Gauge retention (see 3.6 10) Applicable test gauges conforming to figure 4 or 5, or MS3461 shall be installed in three randomly selected cavities in each connector, with the accessory rear hardware removed. The axial load specified in table V shall be applied to individual test gauges in both directions. The load shall be applied at a rate of 1 pound per second until the specified load has been reached. Gauge displacement shall be measured with respect to the connector shell after an initial load of 2 pounds has been applied to assure that all slack has been taken up

4.6.12 Magnetic permeability (see 3.6.11). The wired, assembled, and fully mated connectors shall be checked for relative permeability with an indicator conforming to MIL-I-17214.

4.6.13 Contact retention (see 3.6.12). The contact retention shall be tested as specified in method 2007 of MIL-STD-1344. An axial load, as shown in table V, shall be applied to 20 percent of the contacts in unmated connectors as specified in table VII. A preload of 3 pounds maximum shall be initially applied to fully seat the contacts. Connectors shall have all contacts in place during the test.

Source: https://assist.dla.mil -- Downloaded: 2016-11-25T22:04Z
Check the source to verify that this is the current version before use.

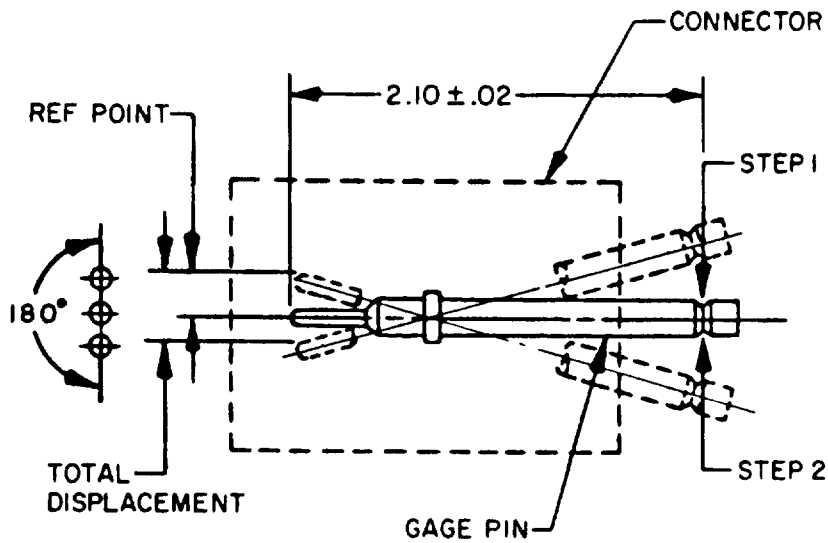

Step 1 - Apply moment to determine reference point.
Step 2 - Apply moment in opposite direction (180°) and measure total displacement.

Contact size	Moment (pound/inch)
22D - -	1
20 - - -	1.5
16 - - -	2
12 - - -	2

FIGURE 6 Pin contact stability test

Source: https://assist.dla.mil -- Downloaded: 2016-11-25T22:04Z
Check the source to verify that this is the current version before use.

4.6.14 Altitude - low temperature (see 3.6.13). Connectors shall be conditioned in a dry oven at a temperature of 50°C ±5°C for at least 8 hours. Wired, mated assembled connectors in a continuous loop circuit shall be placed in a chamber in a manner that will simulate actual service usage. A suitable method must be made to energize the connector between shell and contacts.

a. Reduce the chamber internal temperature to 54°C (-65°F) and maintain until the specimen stabilizes.

b. Reduce the chamber internal pressure to simulate an altitude of 80,000 feet.

c. Maintain the above temperature and pressure for 1 hour minimum.

d. Energize the connector between the connector shell and all contacts using 625 V rms, 60 Hz for 1 minute minimum. There shall be no dielectric breakdown.

e. With the test voltage removed, increase the chamber internal pressure and temperature to standard ambient conditions and allow the specimen to stabilize.

f. Perform dielectric withstanding voltage and insulation resistance tests of 4.6.16.1 and 4.6.15.1, respectively. (The continuous loop circuit may be opened for these tests.) The connectors shall remain mated.

4 6.15 Insulation resistance.

4.6.15.1 At ambient temperature (see 3.6.14.1). Connectors shall be tested in accordance with method 3003 of MIL-STD-1344. For test purposes, the resistance shall be measured separately between the closest pairs of contacts, including those which were inserted and removed 10 times in maintenance aging, and between the shell and the contacts closest to the shell, including those which were inserted and removed 10 times in maintenance aging. Each connector shall have a minimum of 50 percent of the contacts subjected to this test. The tolerance of the applied voltage shall be ±10 percent. For quality conformance inspection, simulated contacts and special techniques may be used in performing this test.

4.6.15.2 At elevated temperature (see 3.6.14.2). The insulation resistance of mated connectors shall be measured in accordance with 4.6.15.1, except that the connectors shall have been exposed to an ambient temperature of 200°C ±3°C for a period of 30 minutes The resistance shall be measured while the connector is at the elevated temperature.

4.6.16 Dielectric withstanding voltage.

4.6.16.1 Dielectric withstanding voltage (see 3.6.15.1). Unmated connectors shall be tested in accordance with method 3001 of MIL-STD-1344. Test voltages, as shown in table X, shall be applied between the closest pairs of contacts and also between the shell and the contacts closest to the shell. Each connector shall have a minimum of 50 percent of its contacts subjected to this test. The specified voltage shall be maintained for 2 seconds minimum. For quality conformance inspection, simulated contacts and special techniques may be used in performing this test.

TABLE X. Test voltages (ac rms).

Altitude (feet)	Equivalent pressure (Torr)	1/ Service rating M		Service rating I	
		Mated	Unmated	Mated	Unmated
Sea level	---	1300	1300	1800	1800
50,000	87.5	800	550	1000	600
70,000	35.5	800	350	1000	400
110,000	5.74	800	200	1000	200

1/ For service rating, see 3.1.

Source: https://assist.dla.mil -- Downloaded: 2016-11-25T22:04Z
Check the source to verify that this is the current version before use.

4.6.16.2 Dielectric withstanding voltage, altitude (see 3.6.15.2). The mated connectors shall be placed in a suitable chamber at room temperature and tested at the simulated altitudes of table X starting at sea level and concluding at 110,000 feet. The test shall be in accordance with method 3001 of MIL-STD-1344. Test voltages, as shown in table X, shall be applied between the closest pair of contacts as well as between the shell and the contacts closest to the shell. Each connector shall have a minimum of 50 percent of its contacts subjected to this test. The specified voltage shall be maintained for 2 seconds minimum The leads of all test circuits shall be brought out through the walls of the chamber. There shall be no wire splices inside the chamber. The wire ends of all leads shall be unsealed.

4.6.17 Durability (see 3.6.16). Connectors shall be subjected to 500 cycles of mating and unmating at a rate not exceeding 300 cycles per hour. The mating and unmating shall be accomplished in a manner similar to subjection in service. After 500 cycles, the plug and receptacle assemblies shall pass the remaining sequence of tests.

4.6.18 Random vibration (see 3.6.17). Connectors shall be tested in accordance with method 2005 of MIL-STD-1344. All contacts shall be wired in series with at least 100 milliamperes of current allowed to flow. The following details shall apply:

a. Monitoring instrumentation - A suitable instrument shall be used to monitor the current flow and to indicate any discontinuity of contacts or interruption of current flow.

b. The number and location of test points.

c. Method of mounting - Similar to figure 7, except the plug and receptacle shall be mounted on separate adapter plates using the connector's normal mounting provisions and suitable hardware. The adapter plate for the plug shall be attached to the mounting bracket. The adapter for the receptacle shall be subsequently attached to the plug adapter plate in a manner simulating the normal mated condition in the aircraft.

d. Test condition VI, letter G, time duration 8 hours per axis.

e. Measurements before, during, and after test.

4.6.19 Shock (specified pulse) (see 3.6.18). Wired connectors shall be tested in accordance with method 2004 of MIL-STD-1344, test condition A. Receptacles shall be mounted by a method similar to the vibration tests on the shock device or carriage. Plugs shall be engaged with the receptacles. The connectors shall be fully wired and the wired bundle or cable clamped to points that move with the connector. A minimum of 8 inches of wire or cable shall be unsupported behind the rear of each connector.

4.6.20 Humidity (see 3.6.19). Wired, mated connectors shall be tested in accordance with test type II of method 1002 of MIL-STD-1344. The following details and exceptions shall apply

a. Polarization voltage - Not required.

b. Wired and mated connectors - As specified in 4.4.1.

c. Test type - II, omitting step 7b.

d. Initial measurements - None. No drip loops in wire or wire splices in chamber. Wires shall be brought out of the chamber through vapor-tight seals.

e. Final measurements - After a minimum of 3 hours at step 7a of the final cycle and while the connectors are still subjected to high humidity, the insulation resistance shall be measured when the chamber temperature reaches 20°C ±5°C and condensate is observed on the connector.

4.6.21 Ozone exposure (see 3.6.20). Ozone exposure shall be conducted in accordance with method 1007 of MIL-STD-1344. The standard details shall apply.

Source: https://assist.dla.mil -- Downloaded: 2016-11-25T22:04Z
Check the source to verify that this is the current version before use.

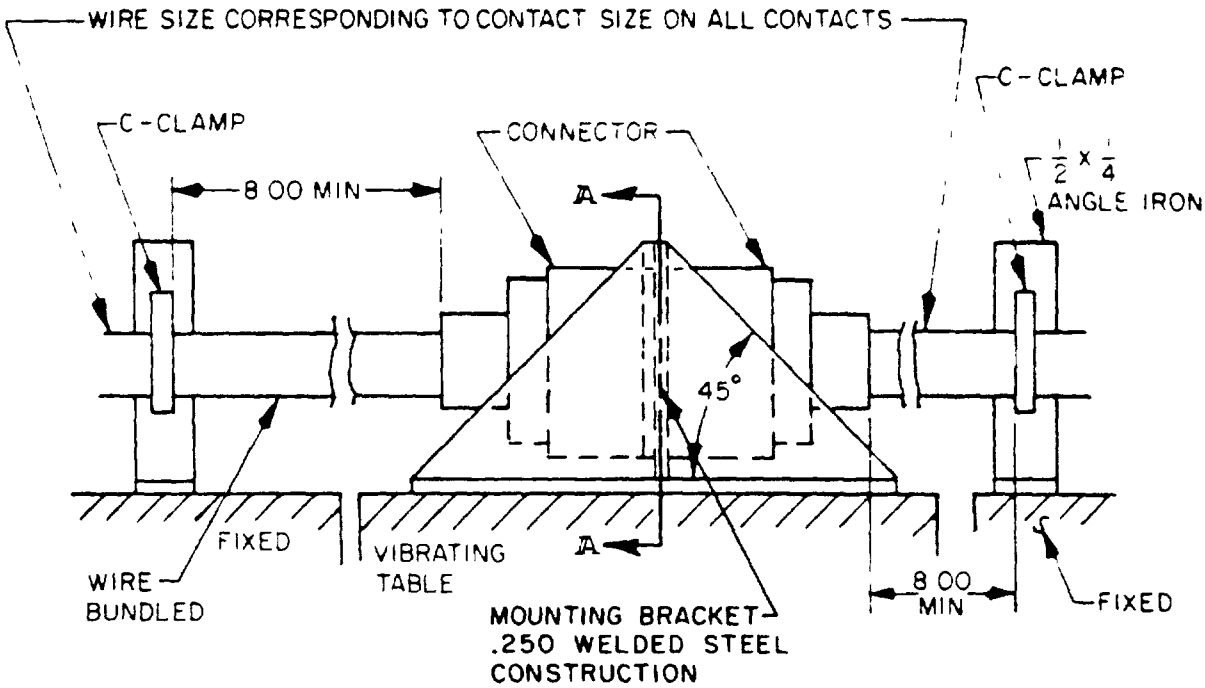

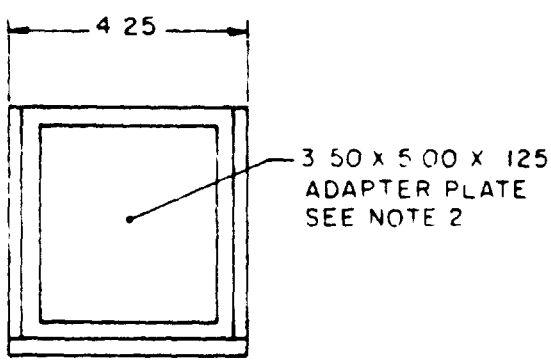

SECTION A-A

NOTES
1. Dimensions are in inches
2 Cable to panel mounting requires a single adapter plate
3 Unless otherwise specified, dimensions are for reference

FIGURE 7 Vibration testing equipment.

Source: https://assist.dla.mil -- Downloaded: 2016-11-25T22:04Z
Check the source to verify that this is the current version before use.

4.6.22 Fluid immersion (see 3.6.21). Connector samples shall be subjected to the test specified in method 1016 of MIL-STD-1344 (one sample per fluid). After testing, connectors shall be visually inspected (no magnification) for cracks and tears which may affect remaining tests in the test sequence. Connectors shall then be mated and unmated, or unmated and mated, depending on fluid immersion test conditions. Samples shall be subjected to the fluids specified in method 1016 of MIL-STD-1344, as shown in table XI herein.

4.6.22.1 Retention system fluid exposure (see 3.6.21.1). Connectors shall be unmated and contacts shall be removed. Connectors shall be immersed in the test fluids of table XI (one sample per fluid) for 20 hours at room temperature. After removal, fluids shall be drained from all recesses. Connectors shall remain in free air for 4 hours minimum and the contacts shall be reinstalled.

4.6.23 Contact insertion and removal forces (see 3.6.22). Contact insertion and removal forces shall be measured in accordance with method 2012 of MIL-STD-1344 using tools specified in 3.4.1.1.

4.6.24 Contact walkout (see 3.6.23). Two contacts in each plug and receptacle shall be tested. The contacts shall be crimped to stranded steel cable of an appropriate size and installed in the connector. The unmated connector shall be mounted in a test fixture as shown on figure 8. A 3-pound load shall be applied to the cable. One 360-degree rotation of the fixture shall constitute 1 cycle. The connector shall be subjected to 100 cycles at a rate of 10 to 20 cycles per minute.

4.6.25 Insertion removal tool abuse (see 3.6.24). Five contact cavities of each size in each connector shall be subjected to each of the following tests. Different contact cavities shall be used for each test. Should a tool become damaged during any of the testing, it shall be replaced. Failure of a tool shall not constitute a test failure.

4.6.25.1 Removal tool rotation. The applicable contact removal tool shall be inserted as if to remove a contact and an axial load of 3 pounds shall be applied. With the force applied, the tool shall be rotated 180 degrees and then removed, also removing the contact. The contact shall be reinserted. These steps shall be repeated three times on each of the five contacts selected.

4.6.25.2 Insertion tool rotation. The contact shall first be removed. With the applicable contact insertion tool, the contact shall be reinserted and an axial load of 3 pounds applied to the tool. With the force applied, the tool shall be rotated 180 degrees and then removed. These steps shall be repeated three times on each of the five contacts selected.

TABLE XI. Fluid immersion.

Sample number	Method 1016, MIL-STD-1344 test fluid
1	d
2	e
3	a
4	b
5	f
6	g
7	c
8	i
9	h
10	i
11	j
12	k

Source: https://assist.dla.mil -- Downloaded: 2016-11-25T22:04Z
Check the source to verify that this is the current version before use.

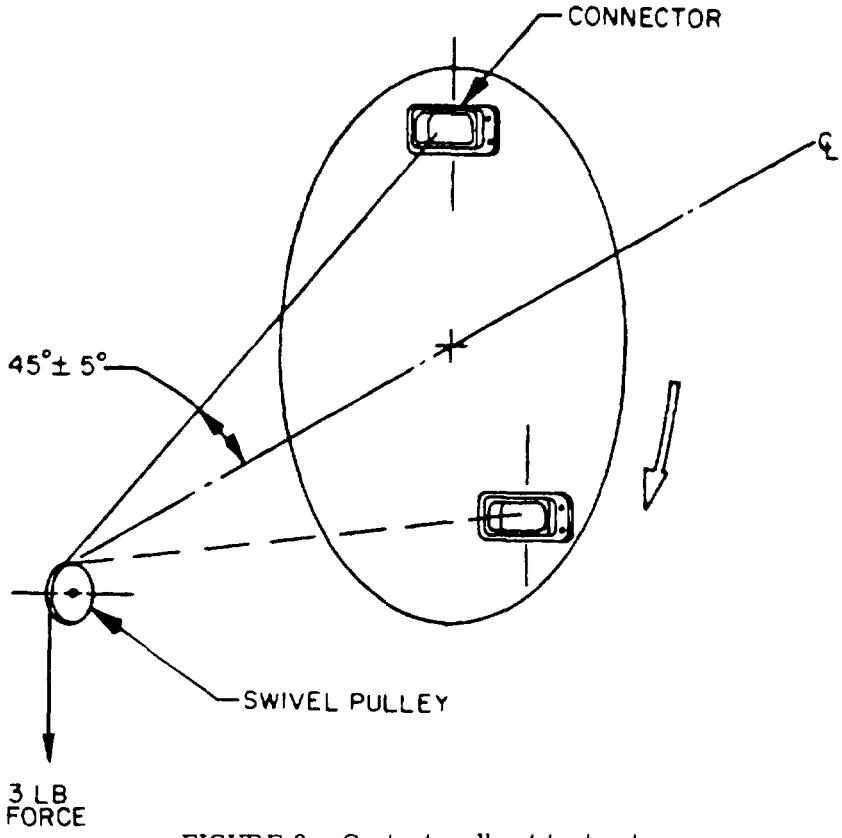

FIGURE 8 Contact walkout test setup

4.6.25.3 Insertion tool thrust. The contact shall first be removed. With the applicable contact insertion tool, the contact shall be reinserted and an axial load of 10 pounds applied to the tool. These steps shall be performed once only on each of the five contacts selected. A new tool shall be used for each contact.

4.6.25.4 Removal tool thrust. The applicable contact removal tool shall be inserted as if to remove the contact and an axial load of 10 pounds shall be applied to the tool. The tool shall then be removed, also removing the contact. These steps shall be performed only once on each of the five contacts selected. A new tool shall be used for each contact.

4.6.26 Temperature life with contact loading (see 3.6.25). Temperature life shall be tested in accordance with method 1005 of MIL-STD-1344. The following details and exceptions shall apply.

a. Test condition for chamber and connector temperature and length of test - Test condition 6 (letter D for qualification inspection, letter B for periodic inspection).

b. Load conditions (electrical) - 100 ±10 milliamperes at 10 V dc maximum.

c. Special fixturing and mounting - See figure 9.

d. Observations or measurements - Discontinuities in excess of 1 microsecond during test. After return to ambient temperature, the connectors shall be unmated and the contact locations measured with approximately 2 pounds axial load applied to seat the contacts against the retention device.

Source: https://assist.dla.mil -- Downloaded: 2016-11-25T22:04Z
Check the source to verify that this is the current version before use.

e. Periodic inspection - Discontinuity as in d.

f. Number of samples - One pair of contacts per sample.

g. Sample preparation - Connector samples shall have one mating pair of contacts removed and replaced with contacts crimped to stranded steel cable or steel-cored copper wire (Copperweld or equivalent) of an appropriate size. The axial location of these contacts shall be measured for conformance to figure 1 or 2, as applicable, with a load of approximately 2 pounds to seat the contacts against the retention device. A weight equal to 50 percent of the axial load specified in table V for the applicable contact size shall be suspended freely from each steel wire.

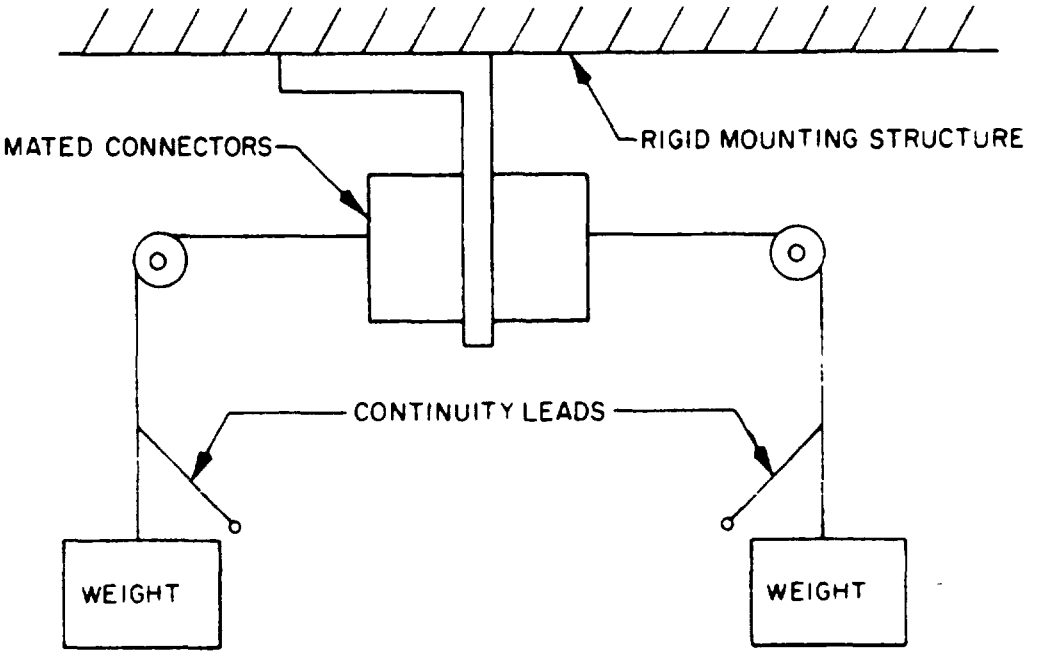

FIGURE 9 Fixturing for temperature life with contact loading

4.6.27 Post test inspection. The tested connectors shall be inspected to determine the effects of previous testing. Any evidence of cracking, loosening of parts, carbon tracking, excess wear, tearing of grommet seals, resilient interface material, peripheral seals, or missing parts shall be recorded.

5. PACKAGING

NOTE The packaging requirements specified herein apply only for direct Government acquisitions. Packaging requirements for products acquired by contractors shall be specified in the individual order.

5.1 Packaging requirements. The requirements for packaging shall be in accordance with MIL-C-55330.

Source: https://assist.dla.mil -- Downloaded: 2016-11-25T22:04Z
Check the source to verify that this is the current version before use.

6. NOTES

6.1 Intended use. The connectors are intended for use in applications wherein extremes of temperature, humidity, and barometric pressure are experienced. They are not intended for use at operating temperatures higher than +200°C for extended periods.

6 2 Ordering data. Acquisition documents should specify the following

a. Title, number, and date of this specification.

b. Description of connector by type, class, and size.

c. Connector part number, including insert arrangement.

d. Whether contacts and sealing plugs are included (for contractor acquisition only)

e. Levels of preservation, packaging, and packing required.

6 3 Qualification. With respect to products requiring qualification, awards will be made only for such products as have, prior to the time set for opening of bids, been tested and approved for inclusion in the applicable qualified products list whether or not such products have actually been so listed by that date. The attention of the manufacturer is called to this requirement, and manufacturers are urged to arrange to have the products that they propose to offer to the Federal Government tested for qualification in order that they may be eligible to be awarded contracts or orders for the products covered by this specification. Information pertaining to qualification of products covered by this specification may be obtained from the Air Force Acquisition Logistics Division, Electronic Support Division (AFALD/PTES), Gentile AFS, Dayton, Ohio 45444.

6.3 1 Contact qualification. Manufacturers who have not previously qualified connectors to this specification should submit sufficient additional contacts to determine compliance with applicable contact military standards, specification sheets, and their related specifications.

6.4 Subject term (keyword) listing.

Connector
Electrical
Environment resisting
Miniature
Rectangular
Rack to panel

6.5 Changes from previous issue. Asterisks are not used in this revision to identify changes with respect to the previous issue, due to the extensiveness of the changes

Custodian
Air Force - 85

Review activities
Air Force - 11, 99
DLA - ES

Preparing activity
Air Force - 85

Agent
DLA - ES

(Project 5935-F271)

Source: https://assist.dla.mil -- Downloaded: 2016-11-25T22:04Z
Check the source to verify that this is the current version before use.

INSTRUCTIONS: In a continuing effort to make our standardization documents better, the DoD provides this form for use in submitting comments and suggestions for improvements. All users of military standardization documents are invited to provide suggestions. This form may be detached, folded along the lines indicated, taped along the loose edge *(DO NOT STAPLE)*, and mailed. In block 5, be as specific as possible about particular problem areas such as wording which required interpretation, was too rigid, restrictive, loose, ambiguous, or was incompatible, and give proposed wording changes which would alleviate the problems. Enter in block 6 any remarks not related to a specific paragraph of the document. If block 7 is filled out, an acknowledgement will be mailed to you within 30 days to let you know that your comments were received and are being considered.

NOTE This form may not be used to request copies of documents, nor to request waivers, deviations, or clarification of specification requirements on current contracts. Comments submitted on this form do not constitute or imply authorization to waive any portion of the referenced document*(s)* or to amend contractual requirements.

(Fold along this line)

(Fold along this line)

DEPARTMENT OF THE AIR FORCE

NO POSTAGE NECESSARY IF MAILED IN THE UNITED STATES

OFFICIAL BUSINESS
PENALTY FOR PRIVATE USE $300

BUSINESS REPLY MAIL
FIRST CLASS PERMIT NO 73236 WASHINGTON D C

POSTAGE WILL BE PAID BY THE DEPARTMENT OF THE AIR FORCE

Electronic Support Division AFLC
2750 ABW/ES
Gentile AF Station, Dayton, OH 45444

Source: https://assist.dla.mil -- Downloaded: 2016-11-25T22:04Z
Check the source to verify that this is the current version before use.

STANDARDIZATION DOCUMENT IMPROVEMENT PROPOSAL

(See Instructions – Reverse Side)

1. DOCUMENT NUMBER	2. DOCUMENT TITLE
MIL-C-83733C	Connectors etc

3a. NAME OF SUBMITTING ORGANIZATION	4. TYPE OF ORGANIZATION *(Mark one)*
	☐ VENDOR
	☐ USER
b. ADDRESS *(Street, City, State, ZIP Code)*	☐ MANUFACTURER
	☐ OTHER *(Specify)* _____

5. PROBLEM AREAS

a. Paragraph Number and Wording

b. Recommended Wording

c. Reason/Rationale for Recommendation

6. REMARKS

7a. NAME OF SUBMITTER *(Last, First, MI)* – Optional	b. WORK TELEPHONE NUMBER *(Include Area Code)* – Optional
c. MAILING ADDRESS *(Street, City, State, ZIP Code)* – Optional	8. DATE OF SUBMISSION *(YYMMDD)*

DD FORM 82 MAR 1426 PREVIOUS EDITION IS OBSOLETE

Source: https://assist.dla.mil -- Downloaded: 2016-11-25T22:04Z
Check the source to verify that this is the current version before use.