PPP-F-320D
October 27, 1970
SUPERSEDING
Fed. Spec. PPP-F-320C
March 24, 1965

FEDERAL SPECIFICATION

FIBERBOARD; CORRUGATED AND SOLID, SHEET STOCK (CONTAINER GRADE), AND CUT SHAPES

This specification was approved by the Commissioner, Federal Supply Service, General Services Administration, for the use of all Federal agencies.

1. SCOPE AND CLASSIFICATION

1.1 Scope. This specification covers fiberboard primarily used in the fabrication of boxes, pads, sleeves, box liners, partitions, and cut shapes. For intended use, see 6.1.

1.2 Classification.

1.2.1. Types, classes, varieties, and grades. The fiberboard shall be of the following types, classes, varieties, and grades, as specified (see 6.2):

Type CF (corrugated fiberboard).

Class - Domestic.
Variety SW (single-wall).
Grades 125, 175, 200, 275, 350 (see table I).
Variety DW (double-wall).
Grades 200, 275, 350, 500, 600 (see table I).

Class - Weather-resistant.
Variety SW.
Grades V3c, W5c, W6c (see table II).
Variety DW.
Grades V11c, V13c, V15c (see table II).

Class-Waterproof and water vapor resistant (WWVR).
Variety SW.
Grades V3c, WWVR; W5c, WWVR (see table II).
Variety DW.
Grades V11c, WWVR; V13c, WWVR (see table II).

Type SF (solid fiberboard).

Class - Domestic.
Grades 125, 175, 200, 275, 350, 500, 600 (see table III).

Class - Weather-resistant.
Grades V2s, V3s, V4s, W5s, W6s, (see table IV).

2. APPLICABLE DOCUMENTS

2.1 The following documents of the issues in effect on the date of invitation for bids or request for proposals, form a part of this specification to the extent specified herein:

Federal Specifications:

QQ-S-781 - Strapping, Flat; Steel.
MMM-A-260 - Adhesives, Water-Resistant (For Sealing Waterproofed Paper).
PPP-B-636 - Box, Fiberboard.
PPP-B-638 - Boxes, Liners and Sleeves, Fiberboard, Knocked-Down, Flat; Packing Of.
PPP-B-640 - Boxes, Fiberboard, Corrugated, Triple-Wall.
PPP-B-1055 - Barrier Material, Waterproofed, Flexible.
PPP-C-650 - Crates, Wood, Open and Covered.
PPP-S-760 - Strapping, Nonmetallic (and Connectors).

FSC 8135

Source: https://assist.dla.mil -- Downloaded: 2016-12-11T05:49Z
Check the source to verify that this is the current version before use.

Federal Standards:

Fed. Test Method Std. No. 101 - Preservation, Packaging, and Packing Materials: Test Procedures.
Fed. Std. No. 123 - Marking for Domestic Shipment (Civil Agencies).

(Activities outside the Federal Government may obtain copies of Federal Specifications, Standards, and Handbooks as outlined under General Information in the Index of Federal Specifications and Standards and at the prices indicated in the Index. The Index, which includes cumulative monthly supplements as issued, is for sale on a subscription basis by the Superintendent of Documents, U. S. Government Printing Office, Washington, D.C. 20402.

(Single copies of this specification and other product specifications required by activities outside the Federal Government for bidding purposes are available without charge at the General Services Administration Regional Offices in Boston, New York, Washington, D.C., Atlanta, Chicago, Kansas City, Mo., Dallas, Denver, San Francisco, Los Angeles, and Seattle, Wash.

(Federal Government activities may obtain copies of Federal Specifications, Standards, and Handbooks and the Index of Federal Specifications and Standards from established distribution points in their agencies.)

Military Standards:

MIL-STD-105 - Sampling Procedures and Tables for Inspection by Attributes.
MIL-STD-129 - Marking for Shipment and Storage.
MIL-STD-731 - Quality of Wood Members for Containers and Pallets.

(Copies of Military Specifications and Standards required by contractors in connection with specific procurement functions should be obtained from the procuring activity or as directed by the contracting officer.)

2.2 Other publications. The following publications form a part of this specification to the extent specified herein. Unless otherwise indicated, the issue in effect on the date of invitation for bids or request for proposal shall apply.

National Motor Freight Traffic Association, Incorporated, Agent:

National Motor Freight Classification.

(Application for copies should be addressed to the National Motor Freight Traffic Association, Inc., Agent, 1616 P Street, N. W., Washington, D. C. 20036.)

Uniform Classification Committee, Agent:

Uniform Freight Classification.

(Application for copies should be addressed to the Uniform Classification Committee, Tariff Publishing Officer, Room 202 Union Station, 516 W. Jackson Blvd., Chicago, Illinois 60606.)

American Society for Testing and Materials (ASTM) Standard:

D 641 Conditioning Paperboard, Fiberboard and Paperboard Containers for Testing (same as TAPPI method T 402m).

(Copies may be obtained from the American Society for Testing and Materials, 1916 Race St., Philadelphia, Pa. 19103)

3. REQUIREMENTS

3.1 Materials.

3.1.1 Paperboard components.

3.1.1.1 Facings and outer plies. The facings of corrugated fiberboard and the outer plies of solid fibertcard shall be made from virgin or reclaimed fibers having bending qualities to satisfy the requirements of 3.7. In addition, the facings and outer plies for class weather-resistant material shall be treated with a suitable wet strength resin to make them highly water resistant.

Source: https://assist.dla.mil -- Downloaded: 2016-12-11T05:49Z
Check the source to verify that this is the current version before use.

3.1.1.1.1 Outer facing of type CF, class WWVR. One outer facing of this material shall be a composite sheet comprised of one ply of sized, wet-strength virgin kraft linerboard laminated to a ply of linerboard conforming to 3.1.1.1 with a minimum of 6 pounds per thousand square feet of polyethylene (see 4.4.6). The sized ply shall be on the exterior side of the facing, with the unsized linerboard next to the corrugated medium. At the supplier's option, both plies of linerboard may be of sized, wet strength material.

3.1.1.2 Corrugating medium. The corrugating medium of corrugated fiberboard shall be made from virgin or reclaimed fibers. In addition, mediums for class weather-resistant material shall be treated with a suitable wet strength resin to make them water-resistant.

3.1.1.3 Filler plies. The filler plies of solid fiberboard shall be made from any combination of fibers that will permit the end product to meet the strength and bending requirements of this specification.

3.1.2 Adhesives.

3.1.2.1 Class, domestic. The adhesive used in the construction of the domestic class of fiberboard shall be that which is commercially used by the industry, and shall enable the end item to meet the strength requirements specified herein.

3.1.2.2 Class, weather-resistant. The adhesive used in the construction of weather-resistant fiberboard shall be water-resistant to the extent that the end item will meet the requirements of this specification (see 3.5).

3.1.2.3 Class, waterproof and water vapor-resistant. The adhesives used shall enable the combined board to meet the requirements of 3.5 and 4.3.2. Paragraph 3.5 also applies to the polyethylene to linerboard bonds in the laminated facings.

3.2 Construction.

3.2.1 Type CF. Corrugated fiberboard shall be made with two (SW) or three (DW) facings. Each facing shall be separated by and securely adhered to an A, B, or C flute corrugating medium.

3.2.1.1. Flutes. The number of flutes per linear foot of corrugated fiberboard shall be as follows:

A flute 33-39
B flute 47-53
C flute 39-45

3.2.1.2 Variety DW. Not more than one B flute corrugated medium shall be used in any multi-wall board.

3.2.2 Type SF. Solid fiberboard shall be constructed by laminating facing plies and, when applicable, filler plies securely and continuously together.

3.2.2.1 Class, domestic.

3.2.2.1.1 Grades 125 and 175. The fiberboard shall consist of not less than two plies of components.

3.2.2.1.2 Grades 200 through 600. The fiberboard shall consist of not less than three plies of components.

3.2.3 Scored sheets. The score lines on scored sheets shall show no visual continuous surface break greater than specified in 3.7 when tested as specified in 4.3.2.

3.2.4 Pads and cut shapes. Pads and cut shapes shall be made in accordance with dimensions or drawings specified in the contract or order (see 6.2).

3.2.4.1 Pads and cut shapes may be single sheets, or may be made up by laminating two or more sheets or layers of specified types and classes of material to the specified thickness.

3.3 Physical requirements.

3.3.1 Type CF (corrugated fiberboard).

3.3.1.1 Class domestic, all varieties.

3.3.1.1.1 Facings. The facings shall conform to the requirements in table I when tested as specified

Source: https://assist.dla.mil -- Downloaded: 2016-12-11T05:49Z
Check the source to verify that this is the current version before use.

in 4.2.1.

3.3.1.1.2 Corrugating medium. The corrugating medium for the domestic class of corrugated fiberboard shall be not less than 0.009 inch in thickness when tested as specified in 4.2.1.

3.3.1.1.3 End item. Domestic class of corrugated fiberboard constructed as specified in 3.2.1 shall conform to the requirements in table I for bursting strength or puncture resistance, as applicable, when tested as specified in 4.3.2.

TABLE I. Type CF, class domestic

Variety	Grade	Combined weight facings only (minimum)	Bursting strength (minimum average) dry
		Pounds per 100 square feet	Pounds per square inch
SW	125	52	125
SW	175	75	175
SW	200	84	200
SW	275	138	275
SW	350	180	350
DW	200	92	200
DW	275	110	275
DW	350	126	350
DW	500	222	500
DW	600	270	600

3.3.1.2 Class weather-resistant. The components and end items shall conform to the applicable thicknesses, and bursting strengths as specified in table II when tested as specified in 4.2.1 and 4.3.2.

3.3.1.3 Class waterproof and water vapor resistant.

3.3.1.3.1 Components. The components shall conform to the applicable thicknesses and basis weight as specified in table II and 3.1.1.1.1, when tested as specified in 4.2.1.

3.3.1.3.2 End items. The end items shall conform to the applicable requirements of table II when tested as specified in 4.3.2. In addition, the end item shall not absorb more than 5 ml. of water when tested as specified in 4.4.7.

TABLE II. Type CF, class weather-resistant, and class waterproof and water vapor-resistant

Variety	Grade[1]	Thickness, inch[2]		Bursting strength pounds per square inch minimum (average)	
		Corrugating medium	Outer facings[3]	Dry	Wet[4]
SW	V3c	0.010	0.023	400	150
SW	W5c	.010	.016	275	100
SW	W6c	.010	.010	175	50
DW	V11c	.010	.023	600	300
DW	V13c	.010	.016	400	200
DW	V15c	.010	.010	300	100

[1]Includes WWVR grades.

[2]A minus 5 percent, or unlimited plus tolerance shall be permitted.

[3]For double-wall fiberboard, the inner facing shall be the same thickness as the outer facing.

[4]After 24 hour submersion (see 4.4.1).

3.3.2 Type SF (solid fiberboard).

3.3.2.1 Class domestic.

Source: https://assist.dla.mil -- Downloaded: 2016-12-11T05:49Z
Check the source to verify that this is the current version before use.

3.3.2.1.1 Facings and filler plies. The combined weights of the facing and filler plies, shall conform to the requirements in table III, when tested as specified in 4.2.1.

3.3.2.1.2 End item. Domestic class of solid fiberboard constructed as specified in 3.2.2 shall conform to the bursting strength requirements in table III, when tested as specified in 4.3.2.

TABLE III. Type SF (solid fiberboard); class domestic, all grades

Grade	Combined weight of plies before lamination (pounds per 1000 square feet - minimum)	Bursting strength (pounds per square inch - minimum average)
125	114	125
175	149	175
200	190	200
275	237	275
350	283	350
500	330	500
600	360	600

3.3.2.2 Class weather-resistant, all grades. The weather-resistant solid fiberboard shall conform to the requirements in table IV, when tested as specified in 4.3.2.

TABLE IV. Type SF, class weather-resistant, all grades

Grade	Thickness[1/] inch	Bursting strength (pounds per square inch, minimum average)	
		Dry	Wet (After 24 hour immersion) (see 4.4.2)
W2s	0.090	550	500
W3s	0.090	400	150
W4s	0.080	400	150
W5s	0.075	275	100
W6s	0.060	175	50

1/ A minus 10 percent or unlimited plus tolerance shall be permitted.

3.4 Dimensions. Sheet and pad sizes, and shape dimensions shall be as specified (see 6.2).

3.4.1 Dimension tolerance.

3.4.1.1 Mill run (untrimmed) sheets. The dimensional tolerance in the machine direction of untrimmed fiberboard sheets shall be minus 1/4 inch and plus 2 inches. The cross machine dimensions shall be not less than specified.

3.4.1.2 Trimmed sheets. The dimensional tolerances for trimmed fiberboard sheets shall be ± 1/8 inch for width and minus 1/8 inch plus 1/2 inch for length.

3.4.1.3 Pads and shapes. The dimensional tolerances for all other materials made from fiberboard shall be ± 1/8 inch.

3.4.1.3 Scored sheets. The center line of score to center line of score dimension, and the center line of score to sheet edge dimension shall be as specified (see 6.2), ± 1/16-inch.

3.5 Glue bond separation of weather-resistant and waterproof and water-vapor-resistant classes. The facings and corrugating media of fiberboard, and the plies of solid fiberboard shall remain securely and continuously adhered to their contacting surfaces when tested as specified in 4.3.2. Edge separation shall not exceed 1/4 inch in depth. This requirement shall also apply to the laminated facing plies of class WWVR.

3.5.1 Lamination of pads and cut shapes. The bonding agent used in the lamination process for fabricating pads and cut shapes shall be equal or superior to the requirements of 3.5, and shall pass the tests as specified therein.

Source: https://assist.dla.mil -- Downloaded: 2016-12-11T05:49Z
Check the source to verify that this is the current version before use.

3.6 Curl. Fiberboard, when prepared for delivery, shall lie flat to the extent that the end item shall contain no curl in excess of 1/8 inch when tested as specified in 4.3.2.

3.7 Bending requirements. Unless otherwise specified, fiberboard shall show no continuous visual surface break of the outer component ply, or facing split completely through, when folded as specified in 4.4.5 and applicable subparagraphs.

3.8 Compliance marking. Unless otherwise specified (see 6.2), each sheet, pad, or cut shape shall be marked with the identification of the specification, class, grade, and date of manufacture, along one edge, with the applicable notation characters not less than 3/16 inch in height, as follows:

PPP-F-320, Class: (DOM, WR, OR WWVR*)
Grade: (125, V3s, or V3c WWVR*)
Date MFG: (MO. and YR. e.g. 10-68)

*Applicable abbreviations of board being procured. The above is an example only.

3.8.1 Class WWVR. Class WWVR fiberboard shall be marked on the facing that has been laminated with polyethylene.

3.9 Workmanship. Fiberboard shall be free from slime, adhesive spots, blisters, tears, scuffs, and checks. Trimmed edges shall be clean cut. There shall be no flute structure distortions except at edges and scores. The quality shall conform to levels established in section 4, hereinafter.

4. QUALITY ASSURANCE PROVISIONS

4.1 Responsibility for inspection. Unless otherwise specified in the contract or purchase order, the supplier is responsible for the performance of all inspection requirements specified herein. Except as otherwise specified, the supplier may utilize his own facilities or any commercial laboratory acceptable to the Government. The Government reserves the right to perform any of the inspections set forth in the specification where such inspections are deemed necessary to assure that supplies and services conform to prescribed requirements.

4.1.1 Sampling for inspection. Sampling for inspection and tests shall be performed in accordance with the provisions set forth in MIL-STD-105, except where otherwise indicated.

4.2 Inspection of materials and components. In accordance with 4.1 components and materials shall be inspected and tested in accordance with all the requirements of referenced specifications, drawings, and standards, unless otherwise excluded, amended, or qualified in this specification, or applicable purchase documents.

4.2.1 Sampling and testing of components. The paperboard components shall be tested to see that they meet the applicable requirements of section 3, including tables I through IV. The methods of testing specified in table V shall be followed. The lot shall consist of all of the paperboard components manufactured at one time for use in the construction of one type, class, variety, and grade of fiberboard and shall be expressed in pounds of paperboard. The sample unit shall be of sufficient length and full width of the roll to conduct all tests referenced in table V. The sample unit shall not be taken from the two outer convolutions of the roll and, when practicable, not more than one sample unit shall be taken from any one roll. The sample size shall be selected in accordance with the sampling plan in table VI. Test results shall include all values upon which the results are based and there shall be no failures to meet the lot average or sample average minimum requirements. Paperboard components shall be conditioned for basis weight and thickness determinations in accordance with ASTM D641-49

TABLE V. Test methods for components

Characteristic	Test method
Basis weight	5022 (Fed. Test Method Std. No. 101)
Thickness	1003 (Fed. Test Method Std. No. 101)
Polyethylene in outer facing of WWVR board	Paragraph 4.4.6

TABLE VI. Component sampling plan

Lot size	Sample size
Pounds of paperboard	
800 or less	2
801 to 22,000	3
22,001 or more	5

Source: https://assist.dla.mil -- Downloaded: 2016-12-11T05:49Z
Check the source to verify that this is the current version before use.

4.3 Inspection of the end item.

4.3.1 Examination of the end item. The end items shall be examined for the defects set forth in the applicable subparagraphs at the inspection level and acceptable quality levels in 4.3.1.5. A random sample shall be drawn from each lot of materials for each style, class, variety, and grade for examination of visual and dimensional characteristics. The lot size, for purpose of determining the sample size in accordance with MIL-STD-105 shall be expressed in units of the end item for examination under 4.3.1.1 through 4.3.1.3 and in units of pallets, skids, boxes, or bundles for examination under 4.3.1.4.

4.3.1.1 Examination for defects in appearance and general workmanship. The sample unit shall be one unit of the end item randomly selected. When practicable, no more than 3 sample units shall be selected from any one shipping unit. Both sides of the materials shall be examined.

Examine	Defects
Appearance	Surfaces, not clean. Not trimmed (as applicable). Tear, cut, hole, scuff mark. Blister, ply separation, splices. Compliance markings missing (as applicable), not along one edge (see 3.8)

4.3.1.2 Examination for dimensional defects. The sample unit shall be one unit of the end item.

Examine	Defects
Mill run sheets	Machine direction more than minus 1/4 inch or plus 2 inches of specified size Cross direction less than specified.
Trimmed sheets	More than ± 1/8 inch of specified width. More than minus 1/8 inch or plus 1/2 inch of specified length.
Cut shapes or pads	More than ± 1/8 inch of specified size.
Scored sheet score lines	Center to center or center to edge distance more than ± 1/16 inch of specified dimension.

4.3.1.3 Examination for defects in construction. The sample unit shall be one unit of the end item.

Examine	Defect
Category of board	Not type, class, variety, grade, or fluting as specified.
Scoring, when applicable	Not as specified.
Type CF	Facings not securely adhered to corrugating medium. Split facings, ragged edges. Distorted flute structure, on areas other than edges for scoring.
Variety DW	More than one B flute in combination.
Type SF	Plys not securely and continuously adhered. Ragged edges; blisters.
Class Domestic:	
Grades 125 and 175	Less than 2 ply.
Grades 200 through 600	Less than 3 ply.

Source: https://assist.dla.mil -- Downloaded: 2016-12-11T05:49Z
Check the source to verify that this is the current version before use.

4.3.1.4 Examination for count per shipping unit and preparation for delivery. The sample unit shall be one shipping unit, fully packed, selected just prior to the closing operation. Closed shipping units shall be examined for closure defects. The lot shall be unacceptable if the average count per shipping unit is less than specified or indicated.

Examine	Defects
Markings (shipping unit and interior packages)	Incorrect; illegible; improper size, location, sequence, method of application.
	Not in accord with applicable Federal or Military Standard.
Material	Not specification material, or wrong category of specification material.
	Nonconforming, missing, damaged, or defective component.
Workmanship	Improper construction, fastening, nailing, strapping, closure, wrapping of package or shipping container.
	Uneven stacking of sheets or packages on pallets, or in other container.
	Omission of master sheets when specified.
Weight	Exceeds maximum specified for bundle, package, or shipping unit.
	Exceeds boxmaker's certificate.

4.3.1.5 Inspection levels and acceptable quality levels (AQL's) for examination. Inspection levels for determining sample size, and the acceptable quality levels (AQL's) expressed in defects per 100 units shall be as follows:

Examination paragraph 1/	Inspection level	AQLs
4.3.1.1	I	6.5
4.3.1.2	S-2	4.0
4.3.1.3	S-2	4.0
4.3.1.4	S-1	2.5

1/ The same sample units shall be used for examination under 4.3.1.2 and 4.3.1.3 and shall be those randomly selected under 4.3.1.1.

4.3.2 Testing of the end item. The end items shall be tested to see that they meet the applicable requirements of section 3, including tables I through IV. The methods of testing specified in the ASTM standard or Fed. Test Method Std. No. 101, where applicable, and as listed in table VII shall be followed. The lot shall consist of all end items produced for delivery at one time and shall be expressed in units of the product. The sample unit shall be of sufficient length and full cross-machine direction of sheets to perform all required tests. A sufficient number of consecutive pads or cut shapes shall be selected to perform all required tests. The sample size shall be in accordance with the following sampling plan. There shall be no failures to meet the sample unit or lot average requirements. The wet bursting strength, and water absorption requirements apply to the lot average. All other test requirements apply to the sample unit. Except where otherwise specified in the detail test paragraph, specimens shall be conditioned and tested in accordance with ASTM method D641.

Lot size, units of product	Sample size
800 or less	2
801 to 22,000	3
22,001 or more	5

Source: https://assist.dla.mil -- Downloaded: 2016-12-11T05:49Z
Check the source to verify that this is the current version before use.

TABLE VII. Instructions for testing the end item

Characteristics	Test method	Number determinations per sample unit 1/	Results reported as Pass or Fail 2/	Results reported as Numerically to nearest 3/
Atmospheric conditions	ASTM D641			
Bursting strength	2007 Procedure B (Std. 101)	6 (3 on each side)	--	Pounds per square inch
Ply Separation	Para. 4.4.2 4/	1	--	1/16-inch
Curl	Para. 4.4.3	1	--	1/16-inch
Bending qualities	Para. 4.4.4	1	x	---------
Thickness	1003 (Std. 101)	10	--	0.001-inch
Water absorption	Para. 4.4.6	1	--	1 ml.
Basis weight	5022 (Std. 101)	3	--	Pound per 1000 square feet

1/ Determinations shall be randomly distributed throughout the sample unit.

2/ If failure is indicated, report description of failure.

3/ Report all values upon which results are based.

4/ These tests shall be performed on specimens that have been subjected to the immersion procedure specified in 4.4.1.

Source: https://assist.dla.mil -- Downloaded: 2016-12-11T05:49Z
Check the source to verify that this is the current version before use.

4.4 Tests.

4.4.1 Immersion procedure for wet bursting strength and ply separation tests of weather-resistant class. Separate specimens, measuring 6 by 10 inches, shall be used for the wet bursting strength, and ply separation tests, as applicable. The specimens shall be cut from undamaged, unscored, and unprinted portions of the board. Corrugated fiberboard shall have the corrugated openings along the 10-inch dimension. The specimens shall be submerged in fresh aerated tap water at a temperature of 75° + 5°F., at a pH value between 6.5 and 7.5. The top 10-inch edge shall be horizontal and 1 inch below the water surface. The specimen shall be supported vertically in such a manner that the water has free access to all surfaces and ply separation, if it occurs, will not be restricted. The specimen shall remain submerged for a period of 24 hours. After removal from the water, the specimen shall continue to be supported in a vertical position and allowed to drain until surfaces no longer glisten, and in the case of corrugated fiberboard, until excess water has drained from the flutes. Larger or additional specimens may be used if necessary to obtain the required number of bursts per sample unit.

4.4.2 Ply separation. Corrugated and solid fiberboard, after immersion procedure specified in 4.4.1, shall be tested for proper adhesion of components as follows: If separation occurs spontaneously and freely during soaking, the board fails to meet this requirement. Surface tension of water may cause the wet components of the fiberboard to cling together even though not properly bonded. Using pressure sufficient only to overcome the surface tension of water, brush lightly with the ball of the thumb, across the cut edges of the specimen. Repeat at several points on each of the four edges. Separation of the components shall not extend more than 1/4-inch from the edge of the specimen. In addition, for testing double wall corrugated fiberboard, a soaked specimen shall be laid on a table, in atmospheric conditions of 73° + 5°F. and 50 percent relative humidity, with air circulating across the top surface of the specimen until the specimen fails or reaches equilibrium (minimum 24 hours). The fiberboard complies with the specification if separation of the components does not extend more than 1/4-inch from the edge of the specimen.

4.4.3 Curl. Cut a 12 by 24 inch sample to produce two 12 by 12 inch specimens. Place the specimens in the conditioning apparatus shown by figure II so that opposite facings contact the bottom platen. The top platen shall exert 3 + 1/4 pounds per square foot on the specimen. Condition the assembly according to ASTM D641-49. Remove the top platen. Measure and report, to the nearest 1/16-inch, the maximum point of departure of any point of the specimen along any edge. Measure from the top surface of the bottom platen to the under side of the specimen.

4.4.4 Bending. A 12 by 12 inch specimen, conditioned according to ASTM D641, shall be scored along and across the machine direction, or corrugations, using scoring devices having the proper profiles for the type, class, variety, and grades of fiberboard to be tested. Cracks or ruptures occurring at the intersection of score lines shall be disregarded. Report any continuous visual score line surface break. At the contractor's option, he may furnish samples from the same production run of fiberboard as the lot being sampled, which have been scored on his own equipment, for the bending tests. These samples shall be conditioned according to ASTM D641 before bending. The production score lines on scored sheets shall be included in the test (see 3.2.3).

4.4.4.1 Type CF, corrugated fiberboard.

4.4.4.1.1 Variety SW, (single wall). Single wall corrugated shall be folded 180 degrees toward the inner facing along both the machine and cross score lines.

4.4.4.1.2 Varieties DW (double-wall). DW corrugated fiberboard shall be folded 180 degrees inward (male side) on scores parallel to the corrugations. For scores at right angles to the corrugations, the fiberboard shall be bent outward (female side) 90 degrees, returned to the flat, nonfolded position and then folded 90 degrees inward (male side).

4.4.4.2 Solid fiberboard. Solid fiberboard shall be folded 180 degrees inward, (male side) on scores parallel to the machine direction. Scores parallel to the cross direction shall be folded outward 90° in the female direction, returned to its unfolded position, and then folded 90° inward (male direction).

4.4.5 Amount of polyethylene determination. Cut a minimum sample of 24 square inches (6-by 4-inch), tolerance: + 1/32-inch in length and width dimensions so that the weight of extracted film may be accurately converted to pounds per 1000 square feet. Soak the sample in water containing 2 percent wetting agent (Rohm and Haas-"Triton X-114," or equivalent). Peel the fibers away from the film with a firm rubbing action until only those fibers remain which are mostly adhered to the polyethylene film. To remove the remaining fibers, place the prepared sample in a shallow pan of cupriethylene diamine, or hot (160°-180°F.) zinc chloride solution (3 parts zinc chloride to 1 part water). The fiber will soften and be readily removed from the film by brushing the sample with a small wooden spatula. When the film becomes clear, it should be thoroughly washed in cold water and dried to constant weight. The weight of the extracted film should be accurately obtained to the nearest 0.01 gram. The weight in pounds per 1000 square feet may be calculated by multiplying this weight in grams by the conversion factor of 13.2.

Source: https://assist.dla.mil -- Downloaded: 2016-12-11T05:49Z
Check the source to verify that this is the current version before use.

4.4.6 Wet water absorption.

4.4.6.1 Equipment: (1) A 3-inch diameter cylinder, open at both ends; (2) paraffin wax; (3) 100 ml. wet-water. Wet water is defined here as a 2 percent (by volume) solution of a wetting agent, Rohm and Haas "Triton X-114" or equivalent; (4) graduated cylinder (capacity 100 ml, 1 ml sub-division); and (5) watchglass.

4.4.6.2 Procedure: Cut a 6-by 6-inch panel of the waterproof and water vapor resistant fiberboard. Immerse one end of the 3-inch diameter cylinder about 2 inches into hot (200°F.) paraffin wax. Place it on the center of the sample of fiberboard to be tested, on the laminated facing side. The melted wax will form a seal around the bottom of the cylinder. Pour 100 ml. of wet-water into the sealed cylinder. Place a watchglass cover over the cylinder. Set aside for 24 hours, plus or minus one hour. Transfer the remaining wet-water to a graduated cylinder and record the remaining quantity to the nearest 1 ml.

4.4.7 Bursting strength.

4.4.7.1 Dry bursting strength. Specimens cut from undamaged, unscored and unprinted portions of the board shall be conditioned according to ASTM D641. and tested according to method 2007 procedure B of Fed. Test Meth. Std. No. 101. There shall be six determinations per sample unit, three from each side of the board.

4.4.7.2 Wet bursting strength. Specimens prepared according to 4.4.1 shall be tested according to method 2007 procedure b of Fed. Test Meth. Std. No. 101. There shall be six determinations per sample unit, three from each side of the board.

5. PREPARATION FOR DELIVERY

5.1 Packing. Packing shall be level A, B, or C, as specified (see 6.2).

5.1.1 Level A.

5.1.1.1 Type CF; class domestic; type SF; class domestic, mill run sheets. A quantity of fiberboard sheets of one type, class, variety, grade, and size, not exceeding a net weight of 800 pounds, nor a height of 24 inches, shall be packed in a wood crate conforming to PPP-C-650, style A, type II. Prior to placement in the crate, the stack of sheets of quantities of convenient size shall be wrapped with barrier material conforming to PPP-B-1055, class L-2(b), will all folds, seams, and laps continuously sealed with a 3/4 inch width of water-resistant adhesive conforming to MMM-A-260..

5.1.1.1.1 When specified (see 6.2), fiberboard sheets shall be packed on a pallet platform constructed as specified in 5.1.1.1.1.1. The fiberboard sheets shall be arranged flat with edges in alignment, and secured as specified in 5.1.1.1.1.2. A top waster sheet, of the same board packed, shall be provided. The unit load of fiberboard sheets shall be built up within the following limitations: (a) Overall height of the pallet platform and stack of fiberboard sheets together shall not exceed 54 inches; (b) Net weight shall not exceed 2000 pounds.

5.1.1.1.1.1 Construction of pallet platform. The pallet platforms shall have overall length and width dimensions not less than the dimensions of the fiberboard being packed, and not greater than said fiberboard dimensions plus 1/2 inch. The wood used shall be softwood, number 2 common or equal (aspen, pine, fir, spruce, basswood, cottonwood, etc.,), conforming to MIL-STD-731, class 2. The pallet platform shall consist of the following members (a) nominal 1- by 6-inch wood deck boards; (b) nominal 1- by 4-inch wood stringers, grooved to accomodate the strapping required; (c) nominal 3-by 4-by 6-inch long wood posts; and (d) a top deck of corrugated fiberboard conforming to PPP-B-640.
All boards and posts shall be finished top and bottom to a uniform thickness. The pallet shall be assembled as shown in figure I. The outside deck boards shall be flush with the ends of the stringers and all deck boards evenly spaced across the width of the pallet. The number of deck boards used depends on the width of the load and sufficient boards shall be used so that the space between two adjacent boards does not exceed 17 inches. The outside stringers shall be set in 6 inches plus or minus 1/4-inch from the ends of the deck boards and the inside stringers shall be evenly spaced over the distance between the outside stringers. Not less than three stringers shall be used in pallets up to 88 inches long, and not

Source: https://assist.dla.mil -- Downloaded: 2016-12-11T05:49Z
Check the source to verify that this is the current version before use.

less than four stringers in longer pallets. Each stringer shall be grooved as shown in figure I so that the strapping required (see table VIII) can be easily threaded between the stringer and bottom deck boards. The stringers, deck boards, and posts shall be nailed together, at the joint, with six (three through the top deck board and three through the bottom deck board) cement coated or chemically etched, box or T-head 8d nails, 2-1/2 inches long with a 0.097 inch shank. The nails shall be located so that they do not protrude into the strapping groove. The corrugated fiberboard top deck shall be laminated to the top deck boards with waterproof adhesive and also secured to the deck boards over each post with a 2-inch 14 guage epoxy or nylon coated staple.

5.1.1.1.1.2 Method of placing, sheathing and strapping. The stack of fiberboard sheets shall be positioned on the pallet so that they do not protrude beyond any pallet edge. The stack shall be completely sheathed on all sides and the top with a fiberboard sheet conforming to this specification, type CF, class weather-resistant, variety single wall, grade W5c. Each stack of sheets and its sheath shall be secured to its pallet with flat steel or non-metallic strapping conforming to QQ-S-781, type I or IV, class A or B, or PPP-S-760, type II or III. The size strapping used shall depend on the gross weight of the pallet load and the number of straps used. Refer to table VIII for the minimum allowable strapping size. One strap per stringer shall encircle the load girthwise, with each strap being inserted through a stringer groove. The load shall also be strapped lengthwise, with each strap passing under the top deck but not under the stringers. The number of lengthwise straps shall be one less than the number of top deckboards, with one strap being positioned midway between each adjacent pair of deck boards. All straps shall be tensioned and sealed tightly. Suitable edge protectors shall be used under the strapping at the top of the load to prevent the straps from cutting or creasing the fiberboard sheets.

TABLE VIII. Minimum allowable strapping size

Steel strap (inch)	Non-metallic type II (inch)	Non-metallic type III (inch)	Maximum gross load per strap (pounds)
5/8 X 0.020	5/8 X 0.020	7/16 X 0.023	300
-	1/2 X .025	1/2 X .020	300
5/8 X .023	1/2 X .030	7/16 X .029	400
3/4 X .020	5/8 X .025	1/2 X .025	400
3/4 X .023	5/8 X .030	1/2 X .030	500

5.1.1.2 Type CF; class weather-resistant and class WWVR and type SF; class weather-resistant, mill run sheets. These fiberboard sheets shall be packed in conformance with 5.1.1.1, or 5.1.1.1.1 when specified (see 6.2).

5.1.1.3 Pads, scored sheets and cut shapes.

5.1.1.3.1 Domestic class. Pads, scored sheets and cut shapes of one type, variety, grade and size shall be packed in snug-fitting fiberboard shipping containers conforming to PPP-B-636, grade V2s, style RSC. Each shipping container shall be closed, waterproofed by means of tape, and reinforced in accordance with the appendix of the container specification. The weight of contents of each shipping container shall not exceed 65 pounds.

5.1.1.3.2 Weather-resistant class. Pads, scored sheets and cut shapes of one type, variety, grade, and size shall be packed in conformance with 5.1.1.3.1, except that the waterproofing is not required.

5.1.2 Level B.

5.1.2.1 Type CF, all classes; type SF, classes domestic and weather-resistant, mill run sheets. These fiberboard sheets shall be packed in conformance with 5.1.1.1, except that wrapping with barrier material is not required, or in conformance with 5.1.1.1.1, except that sheathing with W5c fiberboard is not required.

5.1.2.2 Pads, scored sheets and cut shapes. Pads, scored sheets and cut shapes of one class, type, variety, grade, and size shall be packed in a snug-fitting fiberboard shipping container conforming to PPP-B-636, type CF or SF, class domestic. Each shipping container shall be closed in accordance with method II as specified in the appendix of PPP-B-636. The weight of contents of each shipping container shall not exceed 65 pounds. When specified (see 6.2) the fiberboard shipping container shall be a grade V3c, V3s or V4s box fabricated in accordance with PPP-B-636, and closed in accordance with the appendix to PPP-B-636. When specified (see 6.2) pads, scored sheets and cut shapes too large to box may be palletized in accordance with 5.1.1.1.1, except that sheathing shall be type CF, class domestic, grade 200 or higher.

5.1.3 Level C.

Source: https://assist.dla.mil -- Downloaded: 2016-12-11T05:49Z
Check the source to verify that this is the current version before use.

5.1.3.1 Type CF, variety DW, grades V11c, V11c WWVR and 600, mill run sheets. These sheet shall be unitized in bundles weighing not more than 1500 pounds. Spacer blocks shall provide a four-way opening, not less than three inches high, in the center of the load for fork-lift handling. Waster sheets of the material unitized shall be provided above and below the spacer blocks, and on top and bottom of the load. The unit shall be strapped with at least three straps evenly spaced across the length of the unit, and one strap centered in the width of the unit. The strapping shall be flat steel not less than 3/4 x 0.020 inches in size.

5.1.3.2 Pads, scored sheets and cut shapes. These shall be packed in a manner to insure carrier acceptance and safe delivery at destination at the lowest transportation rate for such supplies. Containers shall be in accordance with Uniform Freight Classification Rules or National Motor Freight Classification Rules, as applicable.

5.2 Marking.

5.2.1 Civil agencies. In addition to any special marking required by the contract or order, shipments shall be marked in accordance with Fed. Std. No. 123.

5.2.2 Military agencies. In addition to any special marking required by the contract or order, shipments shall be marked in accordance with MIL-STD-129.

6. NOTES

6.1 Intended use. Fiberboard is used in the fabrication of boxes, pads, sleeves, box liners, partitions, and cut shapes. The types, classes, varieties, and grades of fiberboard sheet stock covered in 1.2.1 of this specification are used for fabricating boxes in compliance with the specifications cited below. When a box specification is cited in the ordering data (see 6.2) any additional fiberboard requirements specified in the box specification shall also apply. In cases of conflicting material requirements, the box specification shall prevail.

Type	Class	Variety	Grades	Box specification
CF	Domestic	SW	125, 175, 200, 275, 350	PPP-B-636
CF	Domestic	SW	200, 275, 350	PPP-B-591
CF	Domestic	SW	275	PPP-B-645
CF	Domestic	DW	All grades	PPP-B-636
CF	Weather-resistant	SW	V3c, W5c, W6c	PPP-B-636
CF	Weather-resistant	DW	V11c, V13c, V15c	PPP-B-636
SF	Domestic		All grades	PPP-B-636
SF	Domestic		200, 275, 350, 375	PPP-B-591
SF	Domestic		275	PPP-B-645
SF	Weather-resistant		V2s, V3s, V4s, W5s, W6s	PPP-B-636
SF	Weather-resistant		V2s	PPP-B-645
SF	Weather-resistant		W5s	PPP-B-645
CF	WWVR	SW	All grades	PPP-B-636
CF	WWVR	DW	All grades	PPP-B-636
CF	Weather-resistant	SW	V3c	MIL-B-43273
CF	WWVR	SW	V3c, WWVR	MIL-B-43273
CF	Domestic	SW	200, 275, 350	MIL-B-17757
CF	Domestic	DW	200, 275	MIL-B-17757
CF	Weather-resistant	SW	V3c, W5c, W6c	MIL-B-17757
CF	WWVR	SW	V3c, WWVR; W5c, WWVR; W6c, WWVR	MIL-B-17757
CF	Weather-resistant	DW	V15c	MIL-B-17757
CF	WWVR	DW	V15c, WWVR	MIL-B-17757
SF	Weather-resistant		V2s, V3s	MIL-B-17757

6.2 Ordering data. Purchasers should select the preferred options permitted herein, and include the following information in procurement documents:

(a) Title, number, and date of this specification.
(b) Type, class, variety, and grade (see 1.2.1).
(c) Size of sheet, pad, etc., (see 3.4.1.2 and 3.4.1.3).
(d) Center line of score to center line of score or sheet edge (as applicable), (see 3.4.1.4).
(e) Flute design of class domestic; variety SW (see 3.2.1.1).

Source: https://assist.dla.mil -- Downloaded: 2016-12-11T05:49Z
Check the source to verify that this is the current version before use.

(f) Mill run or trimmed sheets (see 3.4.1.1 and 3.4.1.2).
(g) Box specification for which fiberboard is to be used, when applicable (see 6.1).
(h) Dimensional direction of flutes of type CF, fiberboard.
(i) Selection of applicable packing level (see 5.1).
(j) When compliance marking is not required (see 3.8).
(k) When shipment of mill run or trimmed sheets on a pallet platform is required (see 5.1.1.1.1).
(l) When weather-resistant grade fiberboard shipping containers are required for level B packing of pads, scored sheets and cut shapes (see 5.1.2.2).
(m) When pads, scored sheets and cut shapes are to be palletized (see 5.1.2.2).

6.3 Special Purpose Fiberboards. The following special purpose fiberboard materials are described in the specifications listed:

(a) Wax-impregnated corrugated fiberboard - PPP-B-1163.
(b) 950 test double-wall weather-resistant corrugated fiberboard - PPP-B-1364.
(c) Triple-wall corrugated fiberboard -PPP-B-640.
(d) Coated, weather-resistant corrugated fiberboard - PPP-B-001608.

Source: https://assist.dla.mil -- Downloaded: 2016-12-11T05:49Z
Check the source to verify that this is the current version before use.

FIGURE I. - PALLET CONSTRUCTION

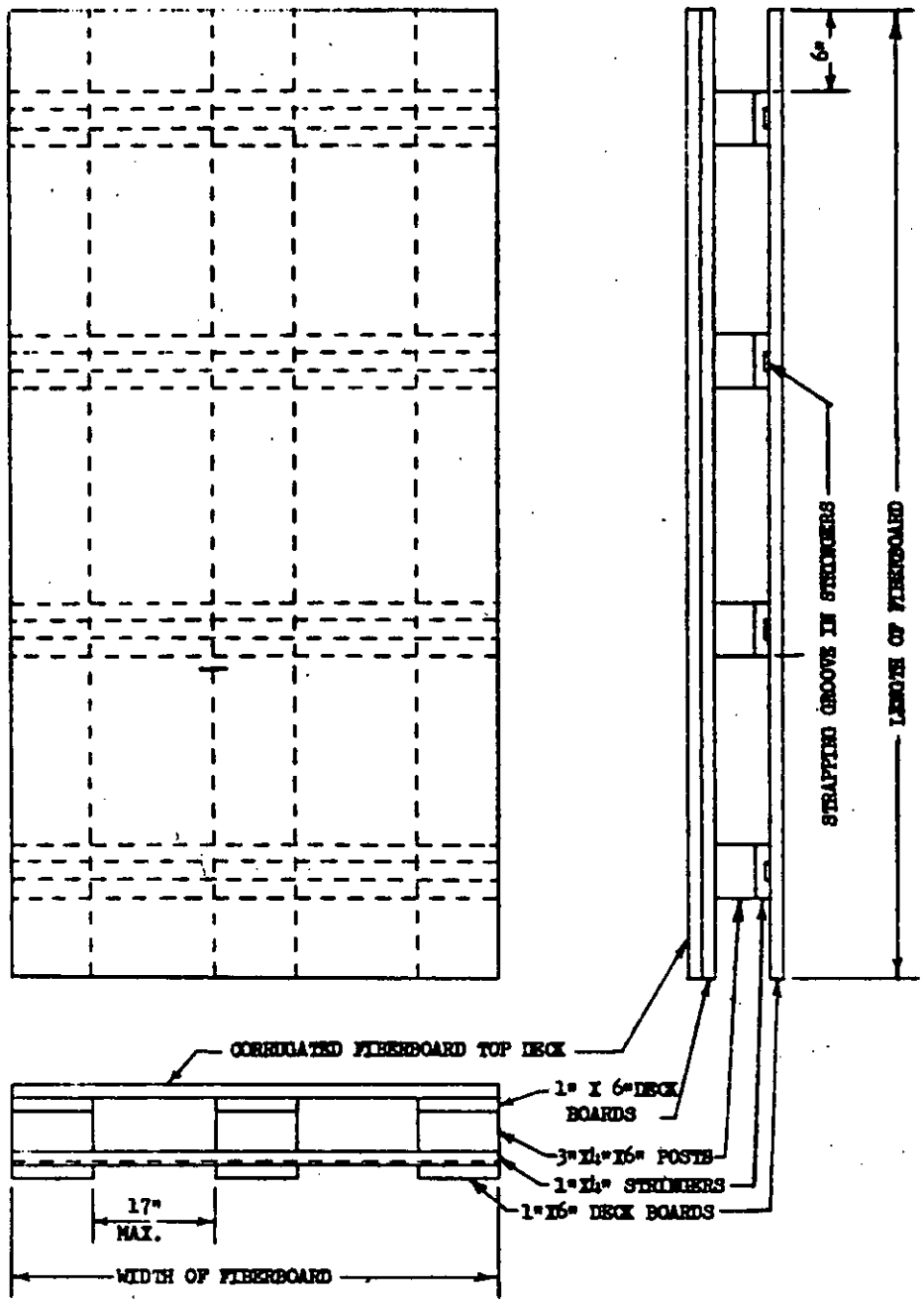

Source: https://assist.dla.mil -- Downloaded: 2016-12-11T05:49Z
Check the source to verify that this is the current version before use.

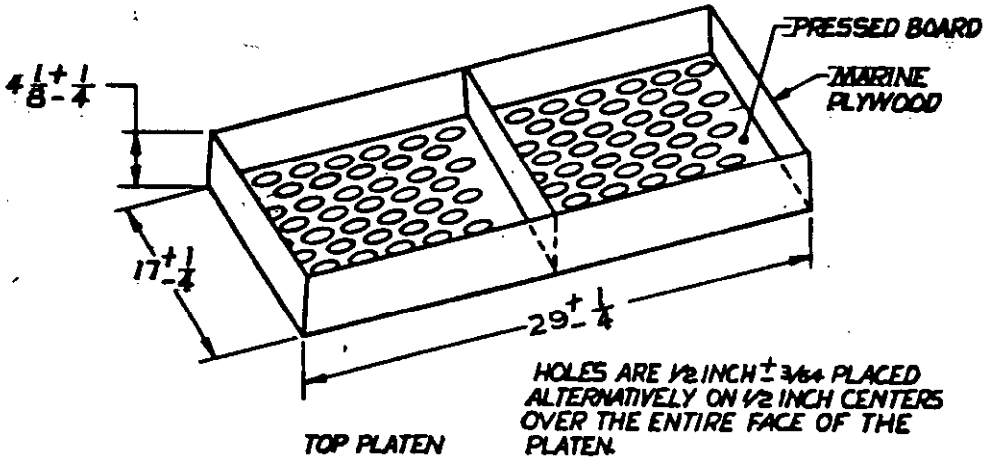

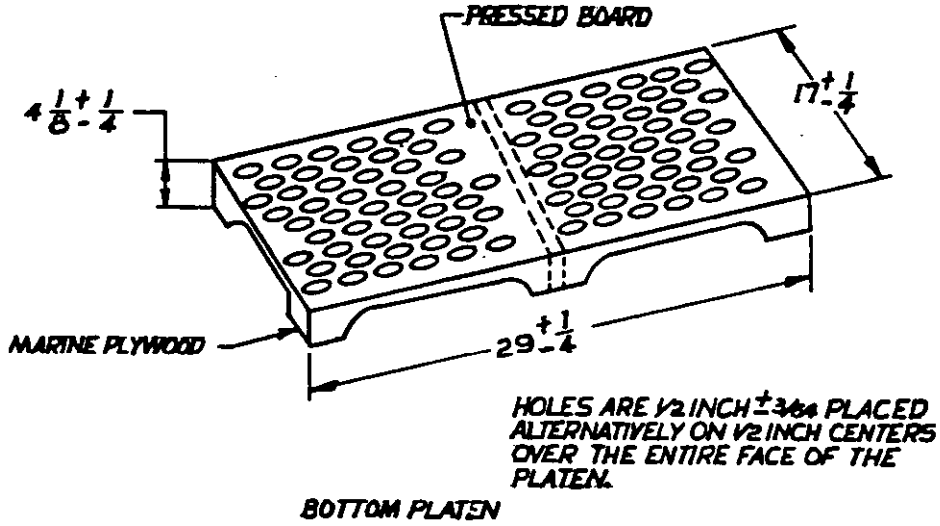

FIG-II CURL TEST APPARATUS

Source: https://assist.dla.mil -- Downloaded: 2016-12-11T05:49Z
Check the source to verify that this is the current version before use.

MILITARY CUSTODIANS:

Army - GL
Navy - SA
Air Force - 69

Review activities:

Army - GL, MU, SM, WC, MD
Navy - SA, YD, OS, AS
Air Force - 69

User activities:

Army - MD
Navy - MC

CIVIL AGENCIES INTEREST:

GSA-FSS
HEW
AGR
INT
JUS
GPO
COM-NBS

Orders for this publication are to be placed with General Services Administration, acting as an agent for the Superintendent of Documents. See section 2 of this specification to obtain copies and other documents referenced herein. Price 20 cents each.

Source: https://assist.dla.mil -- Downloaded: 2016-12-11T05:49Z
Check the source to verify that this is the current version before use.

GENERAL SERVICES ADMINISTRATION - FEDERAL SUPPLY SERVICE

SPECIFICATION COMMENT SHEET

BUDGET BUREAU NO. 29-R0175

INSTRUCTIONS

This form provides a way for users of this specification to inform the originator of problems encountered in its use. It is not to be used to request changes to accommodate proprietary features. All comments will be considered and appreciated, but please do not expect a reply. To comment: detach, complete, and mail to GSA, FSS, FMSX - Washington, D. C. 20406.

NOTE: Comments on this form do not constitute or imply authorization to waive any part of the document or serve to amend contractual requirements.

1. SPECIFICATION

PPP-F-320 - Fiberboard; Corrugated and Solid, Sheet Stock (Container Grade), and Cut Shapes

2. CONTRACT NO. *(If any)*	3. QUANTITY ON CONTRACT *(Optional)*	4. DOLLAR VALUE *(Optional)*

5. GENERAL NATURE OF PROBLEM *(e.g., inspection difficulties, manufacturers unable to meet tolerances, containers collapse under normal warehousing conditions, etc.)*

6. SPECIFIC REQUIREMENTS AFFECTED *(Include paragraph number and lines of wording)*

7. SPECIFIC PROBLEMS *(e.g. tests in 4.2.2 will not assure that the battery will last required time; temperature ranges in table 2 do not conform to commercially available items.)*

8. RECOMMENDATIONS

9. NAME OF MANUFACTURER, ASSOCIATION, GOVT., AGENCY, ETC.	10. ADDRESS *(Number, Street, City, State and Zip Code)*

11. NAME AND TITLE OF SUBMITTER	12. DATE

GSA DC 69-9761

FORM GSA FEB 69 2200

Source: https://assist.dla.mil -- Downloaded: 2016-12-11T05:49Z
Check the source to verify that this is the current version before use.

INSTRUCTIONS: In a continuing effort to make our standardization documents better, the DoD provides this form for use in submitting comments and suggestions for improvements. All users of military standardization documents are invited to provide suggestions. This form may be detached, folded along the lines indicated, taped along the loose edge *(DO NOT STAPLE)*, and mailed. In block 5, be as specific as possible about particular problem areas such as wording which required interpretation, was too rigid, restrictive, loose, ambiguous, or was incompatible, and give proposed wording changes which would alleviate the problems. Enter in block 6 any remarks not related to a specific paragraph of the document. If block 7 is filled out, an acknowledgement will be mailed to you within 30 days to let you know that your comments were received and are being considered.

NOTE: This form may not be used to request copies of documents, nor to request waivers, deviations, or clarification of specification requirements on current contracts. Comments submitted on this form do not constitute or imply authorization to waive any portion of the referenced document(s) or to amend contractual requirements.

(Fold along this line)

(Fold along this line)

DEPARTMENT OF THE ARMY

NO POSTAGE NECESSARY IF MAILED IN THE UNITED STATES

OFFICIAL BUSINESS
PENALTY FOR PRIVATE USE $300

BUSINESS REPLY MAIL
FIRST CLASS PERMIT NO 12062 WASHINGTON D C

POSTAGE WILL BE PAID BY THE DEPARTMENT OF THE ARMY

Commander
US Army Natick Research and Development
Laboratories
ATTN: DRDNA-ES (Mr. D. Luppino)
Natick, MA 01760

Source: https://assist.dla.mil -- Downloaded: 2016-12-11T05:49Z
Check the source to verify that this is the current version before use.