INCH-POUND

MIL-T-29504/3A
19 December 1989
SUPERSEDING
MIL-T-29504/3
25 August 1987

MILITARY SPECIFICATION SHEET

TERMINI, FIBER OPTIC, CONNECTOR, REMOVABLE,
ENVIRONMENT RESISTING, CLASS 2, TYPE II, STYLE A,
DUMMY TERMINUS, (FOR MIL-C-28876 AND MIL-C-83526 CONNECTORS)

This specification sheet is approved for use by all Departments and Agencies of the Department of Defense.

The requirements for acquiring the product described herein shall consist of this specification sheet and the issue of the following specification listed in that issue of the Department of Defense Index of Specifications and Standards (DODISS) specified in the solicitation: MIL-T-29504.

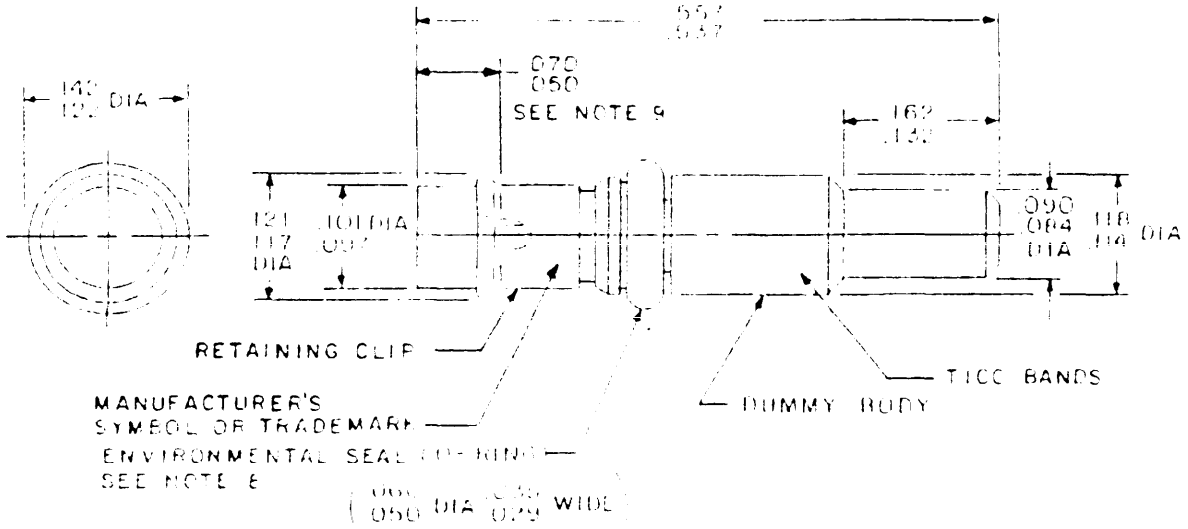

FIGURE 1. Dummy terminus.

Ⓐ denotes changes

DISTRIBUTION STATEMENT A. Approved for public release; distribution is unlimited.

Source: https://assist.dla.mil -- Downloaded: 2016-12-10T05:40Z
Check the source to verify that this is the current version before use.

Inches	mm	Inches	mm	Inches	mm
.029	0.74	.084	2.13	.122	3.10
.030	0.76	.086	2.18	.132	3.35
.035	0.89	.090	2.29	.142	3.61
.040	1.02	.097	2.46	.162	4.11
.050	1.27	.101	2.57	.164	4.67
.060	1.52	.114	2.90	.204	5.18
.066	1.68	.117	2.97	.537	13.64
		.118	3.00	.557	14.15
		.121	3.07		

NOTES:
1. All dimensions are in inches.
2. Metric equivalents are given for general information only.
3. All diameters to be concentric within .002 (0.05 mm).
4. Dimensions apply after plating.
5. Dummy termini to be used to fill unused cavities.
6. (O-ring) is a fluorosilicone material.
7. The TICC bands shall be at the rear of the dummy terminus.
8. (O-ring) dimensions are those prior to installation on dummy terminus.
9. Dimensions to be measured with terminus installed in connector insert or equivalent gauge fixture.

FIGURE 1. Dummy terminus - Continued.

Source: https://assist.dla.mil -- Downloaded: 2016-12-10T05:40Z
Check the source to verify that this is the current version before use.

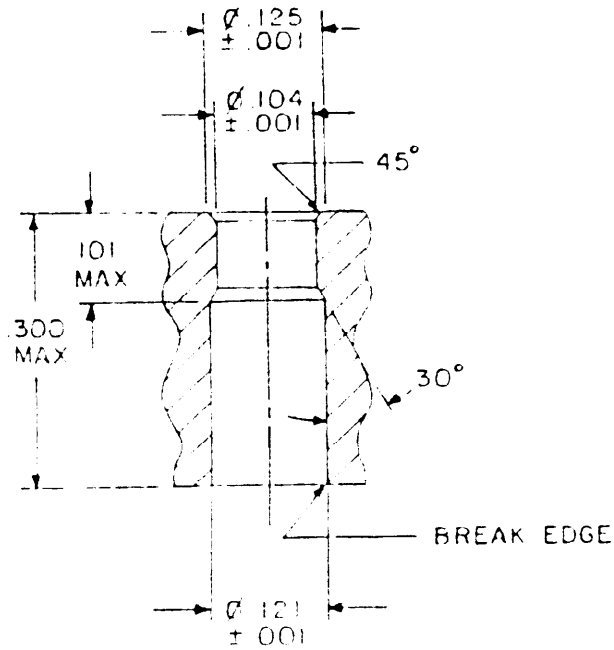

Inches	mm
.0001	0.00
.101	2.56
.104	2.64
.121	3.07
.125	3.17
.300	7.62

NOTES:
1. Dimensions are in inches.
2. Metric equivalents are given for general information only.
3. All diameters to be concentric within .002 (0.05 mm).
4. Dimensions shown after plating.

FIGURE 2. Insert equivalent for contact measurement.

Source: https://assist.dla.mil -- Downloaded: 2016-12-10T05:40Z
Check the source to verify that this is the current version before use.

and corresponding transitions of the envelope waveform shall not be greater than 25 ns.

REQUIREMENTS:

Design and construction:

Dimensions and configuration: See figure 1 and table I.

Weight: 1.0 gram maximum.

Adhesives: Not applicable.

Tools: See table II.

Insertion loss: Not applicable.

Optical discontinuity: Not applicable.

Tensile strength: Not applicable.

Terminus engagement and separation force: Minimum separation force shall be 2 ounces. Maximum average engagement force shall be 24 ounces. Maximum engagement force shall be 30 ounces.

Part or Identifying Number (PIN): See table III (marked on terminus as indicated in figure 1).

TABLE I. Design characteristics.

Mating end size
16

TABLE II. Tools.

End size	Insertion tool	Removal tool
16	M81969/46-01 or M81969/49-01	M81969/47-01

TABLE III. The PIN and supersession data.

TICC	PIN	Superseded PIN	Superseded manufacturer's PIN	CAGE
4038	M29504/03-4038	M28876/16-16	11432745	53669

Source: https://assist.dla.mil -- Downloaded: 2016-12-10T05:40Z
Check the source to verify that this is the current version before use.

Patent notice: The Government does not have royalty-free license under the following patents for the benefit of manufacturers of the item, either for the Government or for use in equipment to be delivered to the Government.

(A) Patent number	Patent expiration date
US 65,032	11/17/2004
US 260,660	01/08/2002
US 376,866	02/12/2002
US 403,446	01/15/2002

CONCLUDING MATERIAL

Custodians:
Army - CR
Navy - EC
Air Force - 85

Review activities:
Army - MI
Navy - AS, MC, SH
Air Force - 11, 17, 19, 70, 80, 90, 99
DLA - ES

User activities:
Army - AV
Navy - CG, MC, OS, YD
Air Force - 13, 14, 84

Preparing activity:
Navy - EC

Agent:
DLA - ES

(Project 6060-0076-3)

Source: https://assist.dla.mil -- Downloaded: 2016-12-10T05:40Z
Check the source to verify that this is the current version before use.