INCH-POUND

MIL-STD-2042-5(SH)
7 July 1993

# MILITARY STANDARD

# FIBER OPTIC TOPOLOGY INSTALLATION STANDARD METHODS FOR NAVAL SHIPS (CONNECTORS AND INTERCONNECTIONS)

(PART 5 OF 6 PARTS)

AMSC N/A

AREA GDRQ

DISTRIBUTION STATEMENT A. Approved for public release; distribution is unlimited.

Source: https://assist.dla.mil -- Downloaded: 2016-12-31T21:23Z
Check the source to verify that this is the current version before use.

# FOREWORD

DEPARTMENT OF THE NAVY
NAVAL SEA SYSTEMS COMMAND
WASHINGTON, DC 20362-5101

1. This Military Standard is approved for use by the Naval Sea Systems Command, Department of the Navy, and is available for use by all Departments and Agencies of the Department of Defense.

2. Beneficial comments (recommendations, additions, deletions) and any pertinent data which may be of use in improving this document should be addressed to: Commander, Naval Sea Systems Command, SEA 05Q42, Department of the Navy, Washington, DC 20362-5101 by using the self-addressed Standardization Document Improvement Proposal (DD Form 1426) appearing at the end of this document or by letter.

3. This standard provides detailed information and guidance to personnel concerned with the installation of fiber optic topologies on Naval surface ships and submarines. The methods specified herein are not identifiable to any specific ship class or type, but are intended to standardize and minimize variations in installations to enhance the compatibility of the fiber optic topologies of all Naval ships.

4. In order to provide flexibility in the use and update of the installation methods, this standard is issued in seven parts; the basic standard and six numbered parts as follows:

Part 1 Cables
Part 2 Equipment
Part 3 Cable Penetrations
Part 4 Cableways
Part 5 Connectors and Interconnections
Part 6 Tests



Source: https://assist.dla.mil -- Downloaded: 2016-12-31T21:23Z
Check the source to verify that this is the current version before use.

## CONTENTS

| PARAGRAPH | | PAGE |
|---|---|---|
| 1. | **SCOPE** | 1 |
| 1.1 | Scope | 1 |
| 1.1.1 | Applicability | 1 |
| 2. | **REFERENCED DOCUMENTS** | 2 |
| 2.1 | Government documents | 2 |
| 2.1.1 | Specifications and standards | 2 |
| 2.2 | Order of precedence | 3 |
| 3. | **DEFINITIONS** | 4 |
| 3.1 | General fiber optics terms | 4 |
| 3.2 | Fiber optic topology | 4 |
| 3.3 | Installing activity | 4 |
| 3.4 | End user equipment | 4 |
| 3.5 | Trunk cable | 4 |
| 3.6 | Local cable | 4 |
| 3.7 | Optical fiber cable component (OFCC) | 4 |
| 4. | **GENERAL REQUIREMENTS** | 5 |
| 4.1 | Fiber optic cable interconnection | 5 |
| 4.1.1 | Interconnection component selection | 5 |
| 4.2 | Fiber connectors | 5 |
| 4.2.1 | Installation | 5 |
| 4.3 | Fiber optic splices | 5 |
| 4.3.1 | Installation | 6 |
| 4.4 | Tests | 6 |
| 4.5 | Safety precautions | 6 |
| 5. | **DETAILED REQUIREMENTS** | 8 |
| 5.1 | Heavy duty connector installation | 8 |
| 5.2 | Light duty connector installation | 8 |
| 5.3 | Mechanical (rotary) splice installation | 8 |
| 6. | **NOTES** | 9 |
| 6.1 | Intended use | 9 |
| 6.2 | Issue of DODISS | 9 |
| 6.3 | Standard method designation | 9 |
| 6.4 | Subject term (key word) listing | 9 |

| METHOD | | |
|---|---|---|
| 5A1 | Multiple terminus connector installation | 5A1-1 |
| 5B1 | Single terminus connector installation | 5B1-1 |
| 5C1 | Mechanical splice ferrule installation | 5C1-1 |



Source: https://assist.dla.mil -- Downloaded: 2016-12-31T21:23Z
Check the source to verify that this is the current version before use.

**CONTENTS**

| TABLE | | PAGE |
|---|---|---|
| 5A1-I | Equipment and materials | 5A1-2 |
| 5A1-II | Cable stripping dimensions | 5A1-5 |
| 5A1-III | Equipment and materials | 5A1-20 |
| 5A1-IV | Cable stripping dimensions | 5A1-25 |
| 5B1-I | Equipment and materials | 5B1-1 |
| 5C1-I | Equipment and materials | 5C1-1 |

| FIGURE | | |
|---|---|---|
| 5A1-1 | Straight backshell | 5A1-4 |
| 5A1-2 | Cable stripping dimensions | 5A1-5 |
| 5A1-3 | Mixing epoxy | 5A1-6 |
| 5A1-4 | Injecting epoxy into terminus | 5A1-7 |
| 5A1-5 | Inserting fiber | 5A1-7 |
| 5A1-6 | Applying epoxy to fiber | 5A1-8 |
| 5A1-7 | Applying epoxy to terminus | 5A1-8 |
| 5A1-8 | Scoring fiber | 5A1-8 |
| 5A1-9 | Injecting epoxy into terminus | 5A1-9 |
| 5A1-10 | Inserting fiber | 5A1-9 |
| 5A1-11 | Applying epoxy to fiber | 5A1-10 |
| 5A1-12 | Termini on curing fixture | 5A1-10 |
| 5A1-13 | Scoring fiber | 5A1-11 |
| 5A1-14 | Polishing tool | 5A1-12 |
| 5A1-15 | Separating cradle halves | 5A1-12 |
| 5A1-16 | Inserting terminus assemblies | 5A1-13 |
| 5A1-17 | Last polish position | 5A1-14 |
| 5A1-18 | Placing terminus in insertion tool | 5A1-15 |
| 5A1-19 | Inserting terminus in tool | 5A1-15 |
| 5A1-20 | Removing terminus from polishing tool | 5A1-16 |
| 5A1-21 | Quality check | 5A1-17 |
| 5A1-22 | Placing terminus in insertion tool | 5A1-17 |
| 5A1-23 | Installing terminus in insert | 5A1-17 |
| 5A1-24 | Installing alignment sleeve | 5A1-18 |
| 5A1-25 | Removing termini from insert | 5A1-19 |
| 5A1-26 | Connector assembly | 5A1-23 |
| 5A1-27 | Installing "O"-ring | 5A1-24 |
| 5A1-28 | Tightening compression nut | 5A1-24 |
| 5A1-29 | Cable stripping dimensions | 5A1-25 |
| 5A1-30 | Mixing epoxy | 5A1-26 |
| 5A1-31 | Injecting epoxy into terminus | 5A1-27 |
| 5A1-32 | Inserting fiber | 5A1-27 |
| 5A1-33 | Applying epoxy to fiber | 5A1-28 |
| 5A1-34 | Applying epoxy to terminus | 5A1-28 |
| 5A1-35 | Scoring fiber | 5A1-28 |
| 5A1-36 | Injecting epoxy into terminus | 5A1-29 |
| 5A1-37 | Inserting fiber | 5A1-29 |



Source: https://assist.dla.mil -- Downloaded: 2016-12-31T21:23Z
Check the source to verify that this is the current version before use.

CONTENTS

| FIGURE | | PAGE |
|---|---|---|
| 5A1-38 | Applying epoxy to fiber. | 5A1-30 |
| 5A1-39 | Termini on curing fixture. | 5A1-30 |
| 5A1-40 | Scoring fiber. | 5A1-31 |
| 5A1-41 | Polishing tool. | 5A1-32 |
| 5A1-42 | Separating cradle halves. | 5A1-32 |
| 5A1-43 | Installing cable in strain relief support. | 5A1-33 |
| 5A1-44 | Inserting termini. | 5A1-33 |
| 5A1-45 | Last polish position. | 5A1-34 |
| 5A1-46 | Placing terminus in insertion tool. | 5A1-35 |
| 5A1-47 | Inserting terminus in tool. | 5A1-35 |
| 5A1-48 | Removing terminus from polishing tool. | 5A1-36 |
| 5A1-49 | Quality check. | 5A1-37 |
| 5A1-50 | Installing spacing shafts. | 5A1-37 |
| 5A1-51 | Placing terminus in insertion tool. | 5A1-38 |
| 5A1-52 | Installing terminus in insert. | 5A1-38 |
| 5A1-53 | Installing alignment sleeve. | 5A1-38 |
| 5A1-54 | Removing termini from insert. | 5A1-40 |
| 5A1-55 | Assembling backshell. | 5A1-40 |
| 5B1-1 | Installing sleeve and cable support - (typical). | 5B1-4 |
| 5B1-2 | Prepared OFCC dimensions. | 5B1-4 |
| 5B1-3 | Mixing epoxy. | 5B1-5 |
| 5B1-4 | Injecting epoxy into connector body. | 5B1-6 |
| 5B1-5 | Applying epoxy to connector barrel. | 5B1-6 |
| 5B1-6 | Inserting fiber into connector. | 5B1-6 |
| 5B1-7 | Sliding cable sleeve over connector barrel. | 5B1-7 |
| 5B1-8 | Crimping connector sleeve. | 5B1-7 |
| 5B1-9 | Scoring fiber. | 5B1-8 |
| 5B1-10 | Inserting connector into polishing tool. | 5B1-9 |
| 5B1-11 | Polishing connector. | 5B1-9 |
| 5B1-12 | Quality check. | 5B1-10 |
| 5C1-1 | Injecting adhesive into ferrule. | 5C1-5 |
| 5C1-2 | Inserting fiber into ferrule. | 5C1-5 |
| 5C1-3 | Positioning curing lamp. | 5C1-5 |
| 5C1-4 | Scoring fiber. | 5C1-6 |
| 5C1-5 | Removing excess adhesive. | 5C1-6 |
| 5C1-6 | Polishing ferrule. | 5C1-7 |
| 5C1-7 | Quality check. | 5C1-8 |



Source: https://assist.dla.mil -- Downloaded: 2016-12-31T21:23Z
Check the source to verify that this is the current version before use.

# 1. SCOPE

1.1 Scope. This standard provides detailed methods for installing fiber optic cable connectors and interconnections.

1.1.1 Applicability. These criteria apply to installations on specific ships when invoked by the governing ship specification or other contractual document. They are intended primarily for new construction; however, they may also be used for conversion or alteration of existing ships. The rapidly changing state of the art in fiber optic technology makes it essential that some degree of flexibility be exercised in enforcing this document. Where there is a conflict between this document and the ship specification or contract, the ship specification or contract shall take precedence. Where ship design is such that the methods herein cannot be implemented, users shall submit new methods or modifications of existing methods to NAVSEA 06KR22 for approval prior to implementation.



Source: https://assist.dla.mil -- Downloaded: 2016-12-31T21:23Z
Check the source to verify that this is the current version before use.

## 2. REFERENCED DOCUMENTS

2.1 Government documents.

2.1.1 Specifications and standards. The following specifications and standards form a part of this document to the extent specified herein. Unless otherwise specified, the issue of the Department of Defense Index of Specifications and Standards (DODISS) and supplement thereto, cited in the solicitation (see 6.2).

SPECIFICATIONS

MILITARY

MIL-S-24623 - Splice, Fiber Optic Cable, Shipboard, General Specifications for (Metric).

MIL-C-28876 - Connectors, Fiber Optic, Circular, Plug and Receptacle Style, Multiple Removable Termini, General Specification for.

MIL-T-29504 - Termini, Fiber Optic Connector, Removable, General Specification for.

MIL-C-83522 - Connectors, Fiber Optic, Fixed Single Terminus, Shipboard, General Specification for.

STANDARDS

MILITARY

MIL-STD-2163 - Insert Arrangements For MIL-C-28876 Connectors, Fiber Optic Circular Plug and Receptacle Style, Multiple Removable Termini.

DOD-STD-2196 - Glossary, Fiber Optics.

MIL-STD-2042-1 - Fiber Optic Topology Installation, Standard Methods for Naval Ships (Cables).



Source: https://assist.dla.mil -- Downloaded: 2016-12-31T21:23Z
Check the source to verify that this is the current version before use.

MIL-STD-2042-2 - Fiber Optic Topology Installation, Standard Methods for Naval Ships (Equipment).

MIL-STD-2042-6 - Fiber Optic Topology Installation, Standard Methods for Naval Ships (Tests).

(Unless otherwise indicated, copies of federal and military specifications, standards, and handbooks are available from the Standardization Documents Order Desk, Building 4D, 700 Robbins Ave, Philadelphia, PA, 19111-5094.)

2.2 Order of precedence. In the event of a conflict between the text of this standard and the references cited herein, the text of this standard shall take precedence. Nothing in this document, however, supersedes applicable laws and regulations unless a specific exemption has been obtained.



Source: https://assist.dla.mil -- Downloaded: 2016-12-31T21:23Z
Check the source to verify that this is the current version before use.

## 3. DEFINITIONS

3.1 General fiber optics terms. Definitions for general fiber optics terms used in this standard are in accordance with DOD-STD-2196. Definitions for other terms as they are used in this standard are given in the following paragraphs.

3.2 Fiber optic topology. The fiber optic topology consists of fiber optic interconnection boxes, trunk and local cables and the connectors and splices used to interconnect the trunk and local cables.

3.3 Installing activity. An installing activity is any military, commercial, or industrial organization involved with the installation of fiber optic topologies aboard Naval ships.

3.4 End user equipment. End user equipment refers to any cabinet, case, panel, or device, that contains components that are either the origin or destination of an optical signal.

3.5 Trunk cable. A trunk cable is a fiber optic cable that provides a continuous optical path between interconnection boxes. Typically, trunk cables are run in the main cableways and have higher fiber counts per cable than local cables.

3.6 Local cable. A local cable is a fiber optic cable that provides a continuous optical path between an end user equipment and an interconnection box, and is typically not run through the main cableways.

3.7 Optical fiber cable component (OFCC). An OFCC is a buffered fiber augmented with a concentric layer of strength members and an overall jacket.



Source: https://assist.dla.mil -- Downloaded: 2016-12-31T21:23Z
Check the source to verify that this is the current version before use.

## 4. GENERAL REQUIREMENTS

4.1 Fiber optic cable interconnection. Fiber optic cable interconnection within the fiber optic topology (see 3.2) shall be made by fiber optic connectors or fiber optic splices.

4.1.1 Interconnection component selection. The interconnection component shall be that referenced in ship specifications and drawings. In those instances where the installing activity (see 3.3) is responsible for determining the correct components, they shall be selected in accordance with 4.2 and 4.3. Termination of the various categories of fibers shall be in accordance with Part 1 of this standard.

4.2 Fiber connectors. Fiber optic connectors shall be as follows:

a. Single terminus (light duty) connectors in accordance with MIL-C-83522/16 shall be used to interconnect two optical fiber cable components (OFCC's) inside an interconnection box or equipment.

b. Multiple terminus (heavy duty) connectors in accordance with MIL-C-28876 shall be used for end user equipment (see 3.4) hookup.

4.2.1 Installation. Connectors shall be installed on cables in accordance with the methods herein and as follows:

a. The hookup configuration of a heavy duty connector (pin to pin terminus) shall be in accordance with the approved drawings. Insert arrangements shall be in accordance with MIL-STD-2163.

b. Where heavy duty connectors are installed on both ends of a cable, the optical fibers shall be connected to like termini; for example, pin 1 of one connector shall be connected to the same fiber as pin 1 of the other connector. Every terminus position shall have either an optical or dummy terminus in accordance with MIL-T-29504/3, /14 or /15.

c. Installation tools shall be as specified in the methods herein. Substitutes shall not be used.

4.3 Fiber optic splices. Fiber optic splices shall be in accordance with MIL-S-24623/4. The mechanical splice is primarily used as an interconnection similar to the light duty connector in 4.2(a) except that the splice interconnection typically induces less loss in the optical link. The mechanical



Source: https://assist.dla.mil -- Downloaded: 2016-12-31T21:23Z
Check the source to verify that this is the current version before use.

splice may also be used in conjunction with a cable splice housing to reconnect a severed cable. Splicing for cable repair is covered in Part 1 of this standard. The method described herein applies to the mechanical splice used as a normal interconnection between cables.

4.3.1 Installation. Fiber optic splice ferrules shall be installed on buffered fibers in accordance with the methods herein and as follows:

a. The splice ferrules will be mated, aligned and installed in the splice tray in accordance with the Methods in Part 2 of this standard.

b. Splices shall be located only inside the interconnection box or equipment.

4.4 Tests. Following installation, testing of all components of the fiber optic topology shall be in accordance with Part 6 of this standard.

4.5 Safety precautions. The following safety precautions apply:

a. Observe all written safety precautions given in the methods of this standard.

b. Observe all warning signs on equipment and materials.

c. The classification of a laser is based on the ability of the optical beam to cause damage to the eye. Under normal operating conditions, an optical fiber communication system (OFCS) is inherently an eye safe system; but, when an optical fiber connection is broken and optical viewing instruments are used, it is possible that hazardous energy can enter the eye. For this reason four service group hazard classes have been devised to indicate the degree of hazard and required hazard control measures. Refer to ANSI Z136.2 for a full technical definition. The following laser safety precautions shall apply:

(1) Ensure personnel are familiar with the laser degree of hazard and the required control measures.



Source: https://assist.dla.mil -- Downloaded: 2016-12-31T21:23Z
Check the source to verify that this is the current version before use.

(2) Light generated by light emitting diodes (LED's) and laser diodes may not be visible but is still hazardous to the unprotected eye. Never look into the end of an optical fiber connected to an LED or laser diode and do not examine or stare into broken, severed or disconnected optical cables.

(3) When access panels or doors are removed or opened and the critical viewing distance could exceed 39 inches (100 cm), use means to contain the beam to preclude exposure of nearby personnel.

(4) Do not view the primary beam or a specular reflection from an OFCS with an optical microscope, eye loupe or other viewing instrument. The instrument may create a hazard due to its light gathering capability.

d. Safety glasses shall be worn when handling bare fibers. Always handle cable carefully to avoid personal injury. Care should be taken with individual fibers to prevent injury to the eyes or penetration of the fibers into the skin.

e. Wash hands after handling bare fibers or performing fiber terminations.

f. Ultraviolet (UV) safety glasses shall be worn when using UV curing lamp.



Source: https://assist.dla.mil -- Downloaded: 2016-12-31T21:23Z
Check the source to verify that this is the current version before use.

## 5. DETAILED REQUIREMENTS

5.1 Heavy duty connector installation. Installation of the MIL-C-28876 heavy duty connector on fiber optic cable shall be in accordance with Method 5A1. There are two types of backshells; some backshells cannot be used with all types of connectors. The backshells with the basic Military Part Numbers M28876/27, M28876/28, and M28876/29 mate only with connectors M28876/1, M28876/6, and M28876/11. These connectors are without strain relief. All other MIL-C-28876 connectors feature internal backshells and strain relief boots. Method 5A1-1 shall be used to install the connector on the cable for those connectors and backshells identified above. Method 5A1-2 shall be used for all other MIL-C-28876 connectors. Each method includes both metal and ceramic termini. Metal termini are available for multimode fibers; ceramic termini are available for single mode and multimode fibers.

5.2 Light duty connector installation. Light duty connectors in accordance with MIL-C-83522/16 shall be installed on fibers in accordance with Method 5B1.

5.3 Mechanical (rotary) splice installation. Mechanical (rotary) splice ferrules shall be installed on fibers in accordance with Method 5C1. Assembly of the splice shall be in accordance with Method 2D1 in Part 2 of this standard.



Source: https://assist.dla.mil -- Downloaded: 2016-12-31T21:23Z
Check the source to verify that this is the current version before use.

## 6. NOTES

(This section contains information of a general or explanatory nature that may be helpful, but is not mandatory.)

6.1 Intended use. The methods for installation of connectors and interconnections depicted in this standard are intended primarily for new construction; however, they may be used for conversion or alteration of existing ships.

6.2 Issue of DODISS. When this standard is used in acquisition, the applicable issue of DODISS must be cited in the solicitation (see 2.1.1).

6.3 Standard method designation. To simplify the usage of this standard, an alpha-numeric designation system was developed to identify and locate a given method. The methods were grouped together by function as follows:

Group A: Multiple terminus connector installation
B: Single terminus connector installation
C: Mechanical splice ferrule installation

Then the designation system was completed as follows:

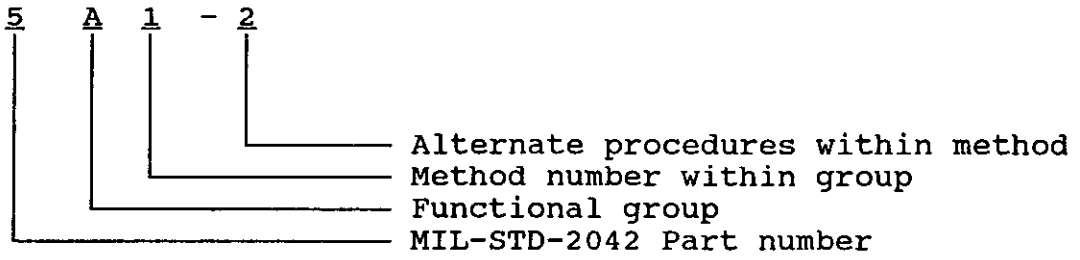


Thus, method 5A1-2 identifies the second alternate procedure within method 1 of group A in Part 5 (MIL-STD-2042-5) of MIL-STD-2042.

6.4 Subject term (key word) listing.

Fiber optic cable interconnection
Fiber optic connectors
Fiber optic splices
Safety

Preparing activity:
NAVY - SH
(Project GDRQ-N132)



Source: https://assist.dla.mil -- Downloaded: 2016-12-31T21:23Z
Check the source to verify that this is the current version before use.

# METHOD 5A1

## MULTIPLE TERMINUS CONNECTOR INSTALLATION

1. SCOPE.

1.1 Scope. This method describes a procedure for installing MIL-C-28876 multiple terminus (heavy duty) connectors on fiber optic cable. Method 5A1-1 covers connectors without strain relief and method 5A1-2 covers connectors with strain relief. (See paragraph 5.1 of this standard for more detail.)

2. REQUIRED EQUIPMENT AND MATERIALS.

2.1 The equipment and materials in the tables located in the applicable sections of this method shall be used to perform these procedures.

3. PROCEDURES.

3.1 Safety summary. The following safety precautions shall be observed:

a. Safety glasses shall be worn at all times when handling bare fibers or dispensing epoxy.

b. Do not touch ends of bare fiber. Wash hands thoroughly after handling bare fibers.

c. Avoid skin contact with epoxy adhesive.

d. Do not look into the end of a fiber until verifying that the fiber is not connected to a laser light source or LED.

3.2 Procedure I. Method 5A1-1 Installation of connectors without strain relief. This method shall be used to install connectors with part numbers M28876/1, M28876/6 and M28876/11 onto fiber optic cables.

3.2.1 The equipment and materials in table 5A1-I shall be used to perform this procedure:



Source: https://assist.dla.mil -- Downloaded: 2016-12-31T21:23Z
Check the source to verify that this is the current version before use.

TABLE 5A1-I. Equipment and materials.

| Description | Quantity |
|---|---|
| Safety glasses | 1 |
| Ruler | 1 |
| "O"-ring lubricant (Bray Cote 609 or equal) | As required |
| Cable jacket stripping tool (AT&T Comcode 105-114-581 or equal) | 1 |
| Kevlar shears (Clauss 86 1/2S or equal) | 1 |
| OFCC strip tool (AT&T Comcode 104-278-478, P/N 700A or equal) | 1 |
| Buffer strip tool (K-Miller Tools F/O 103S or equal) | 1 |
| Container (for alcohol rinse) | 1 |
| Scissors (Clauss 194 or equal) | 1 |
| Crimp tool (Hughes 1143130-7S or equal) | 1 |
| Epoxy (Hysol 0151 or equal) | As required |
| Syringe (Beckton-Dickinson 9585 or equal) | As required |
| Dispensing needles (AT&T Comcode 105-157-879 or equal) | As required |
| Curing fixture (Hughes 4565035-1H or equal) | 1 |
| Tweezers | 1 |
| Cleaver (AT&T Comcode 103-808-770, P/N 975A or equal) | 1 |
| Polishing tool metal termini (Hughes 4569100-3H or equal) | 1 |
| Polishing tool ceramic termini (Hughes 456833-4H or equal) | 1 |
| Adjusting spacer (Hughes 1143343S or equal) | 1 |
| Allen wrench, 3/64 inch | 1 |
| Feeler gage, 0.0030 thick (Hughes 4569403H or equal) | 1 |



Source: https://assist.dla.mil -- Downloaded: 2016-12-31T21:23Z
Check the source to verify that this is the current version before use.

TABLE 5A1-I. Equipment and materials - continued.

| Description | Quantity |
|---|---|
| Glass polishing fixture (Hughes 456910CH or equal) | 1 |
| 7X eye loupe (AT&T Comcode 403-663-347 or equal) | 1 |
| Polishing paper (5 μm aluminum oxide, foam backed) (AT&T Comcode 105-488-175 or equal) | As required |
| Polishing paper (1 μm aluminum oxide, mylar backed) (AT&T Comcode 105-076-798 or equal) | As required |
| Optical microscope 400X (Leica Fiber-Vue 31-22 or equal) | 1 |
| High intensity incandescent back light (Roxter Corp. Model 6490 or equal) | 1 |
| Terminus insertion tool 90°(Hughes 1143042-2S or equal) | 1 |
| Terminus insertion tool (Hughes 1093784S or equal) | 1 |
| Terminus removal tool (Hughes TMF16RT006 or equal) | 1 |
| Alignment sleeve installation and removal tool (metal termini)(Hughes 1143895S or equal) | 1 |
| Alignment sleeve installation and removal tool (ceramic termini)(Hughes 4568335H or equal) | 1 |
| Adjustable wrench | 1 |
| Spanner wrench (Hughes 4569365H or equal) | 1 |
| Alcohol bottle with alcohol/2-propanol or equal (sealable type) | 1 |
| Water bottle (sealable type) | 1 |
| Canned air (Fisher Scientific Co. Cat. No. 15-232-20 or equal)(or compressed air) | As Required |
| Wipes (TEXWIPE TX404T or equal) | As Required |
| Masking tape | As Required |
| Protective caps (plastic) | As Required |



Source: https://assist.dla.mil -- Downloaded: 2016-12-31T21:23Z
Check the source to verify that this is the current version before use.

3.2.2 Cable and fiber preparation.

Step 1 - Ensure cable is correct type as specified on applicable cable diagram.

Step 2 - Measure cable to required length. Then add sufficient slack to allow for at least two reconnections of replacement connectors.

Step 3 - Clean outer cable jacket that will be in contact with connector and backshell with wipe dampened with alcohol and blow dry with air.

NOTE: Keep cable and accessories free from oil, dirt and grease throughout installation procedure. If cleaning is necessary, use wipe dampened with alcohol and blow dry with air.

Step 4 - Slide backshell parts onto cable in order indicated below (see figure 5A1-1).

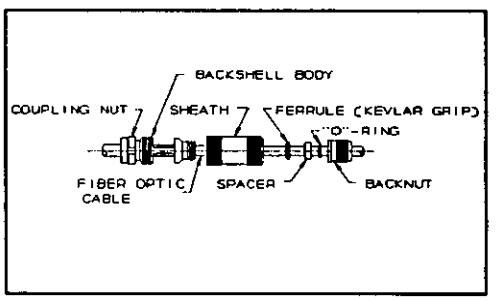


FIGURE 5A1-1. Straight backshell.

a. Backnut

b. "O"-ring

c. Spacer

d. Ferrule (kevlar grip)

e. Sheath (ensure "O"-rings are in place)

f. Backshell body

Step 5 - Mark cable jacket approximately 7 inches (178 mm) from end and strip back outer cable jacket to mark using cable stripper. Fold back kevlar strength members and temporarily tape to cable outer jacket.

**CAUTION:** Do not cut or nick OFCC jackets.

Cut off exposed central member using kevlar shears.

Step 6 - Remove water blocking material and clean OFCC's using wipe dampened with alcohol and blow dry with air.



Source: https://assist.dla.mil -- Downloaded: 2016-12-31T21:23Z
Check the source to verify that this is the current version before use.

Step 7 - Trim OFCC's to dimension A in table 5A1-II using scissors (see figure 5A1-2).

Step 8 - Remove OFCC jackets back to dimension B in table 5A1-II using OFCC stripper and trim OFCC kevlar so that approximately 3 mm extends past OFCC jacket.

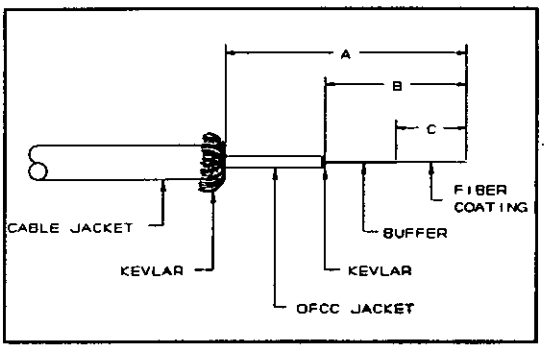


FIGURE 5A1-2. Cable stripping dimensions.

Step 9 - **WARNING:** Wear safety glasses when removing fiber buffers to avoid possible eye injury.

Remove fiber buffers back to dimension C in table 5A1-II using buffer stripper. (NOTE: Remove buffer in small sections (approximately 0.15 inch (4 mm)) at a time.)

TABLE 5A1-II. Cable stripping dimensions.

| Connector 2, 4, and 8 termini | Backshell sizes 11, 13, and 15 | Dimensions in (mm) | | |
|---|---|---|---|---|
| | | A | B | C |
| Plug/Receptacle non-crimp termini | Straight | 5.70 (145) | 4.70 (119) | 0.60 (15) |
| Plug/Receptacle crimp termini | Straight | 5.70 (145) | 1.20 (30) | 0.60 (15) |
| Plug/Receptacle non-crimp termini | 45° and 90° | 5.40 (137) | 4.15 (105) | 0.60 (15) |
| Plug/Receptacle crimp termini | 45° and 90° | 5.40 (137) | 1.20 (30) | 0.60 (15) |

Step 10 - **CAUTION:** The unbuffered fiber is in its most vulnerable state. Take extreme care not to damage fiber. Breakage of any one fiber from this point until the connector is completely assembled will require repetition of this entire step in order to maintain equal length of all fibers.

Remove fiber coating with wipe dampened with alcohol. Wipe from end of buffer towards end of fiber.



Source: https://assist.dla.mil -- Downloaded: 2016-12-31T21:23Z
Check the source to verify that this is the current version before use.

3.2.3 Installation of termini onto fibers.

NOTE: Terminus can be either metal or ceramic crimp and non-crimp types. The metal terminus is used on multimode fibers only. The ceramic termini are used on single mode and multimode fibers. All termini use epoxy to secure the fiber; the crimp types feature an additional crimp sleeve that captures the kevlar strength members of the OFCC's.

Step 1 - Clean termini by shaking them in a container filled with alcohol and blow dry with air.

Step 2 - Remove divider from 2-part epoxy package and mix until both parts are blended into a smooth uniform color (see figure 5A1-3).

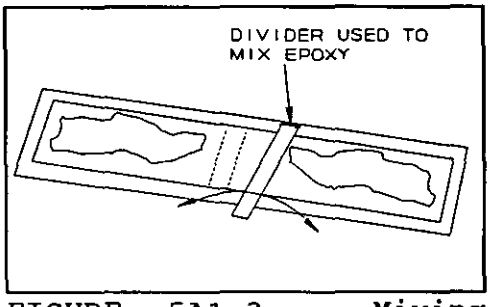


FIGURE 5A1-3. Mixing epoxy.

Step 3 - Install syringe tip, remove plunger, fold epoxy package in half, cut corner and squeeze epoxy into syringe. A 0.75 inch (19 mm) length of epoxy will be enough for about eight termini. Replace plunger.

Step 4 - **WARNING:** Wear safety glasses while dispensing epoxy to avoid possible eye injury.

Remove air pockets by holding tip of syringe upward and dispensing epoxy onto wipe until it runs free and clear.

Step 5 - Proceed to 3.2.3.1 below to complete installation of non-crimp termini. Proceed to 3.2.3.2 below to complete installation of crimp termini.



Source: https://assist.dla.mil -- Downloaded: 2016-12-31T21:23Z
Check the source to verify that this is the current version before use.

3.2.3.1 Metal and ceramic non-crimp termini.

Step 1 - Slide terminus, base first, onto syringe tip (see figure 5A1-4). Depress plunger and slowly inject epoxy into terminus until it escapes out of bushing, forming a small bead. (NOTE: Do not overfill. Be extremely careful not to get epoxy on pin spring or other terminus moving parts.)

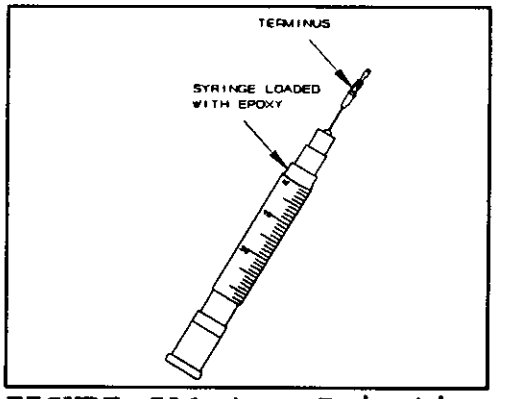


FIGURE 5A1-4. Injecting epoxy into terminus.

Step 2 - Remove terminus from syringe and using a wipe dampened with alcohol, wipe away any epoxy on outer diameter of bushing without disturbing epoxy bead.

Step 3 - Insert fiber into base end of bushing and seat against shoulder (see figure 5A1-5). Do not allow fiber to slip back.

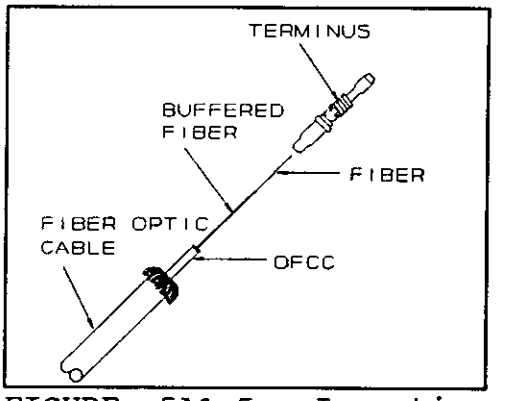


FIGURE 5A1-5. Inserting fiber.



Source: https://assist.dla.mil -- Downloaded: 2016-12-31T21:23Z
Check the source to verify that this is the current version before use.

Step 4 - Check to ensure there is a small bead of epoxy where the fiber protrudes from the bushing. If necessary, add a small amount of epoxy to form bead (see figure 5A1-6).

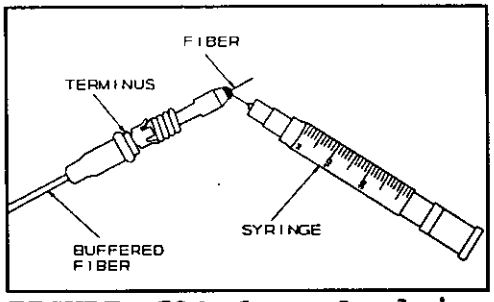


FIGURE 5A1-6. Applying epoxy to fiber.

Step 5 - Place termini on curing fixture and apply epoxy to fiber where it enters base of terminus (see figure 5A1-7). (NOTE: Make sure epoxy does not run onto outer diameter of bushing. Be extremely careful not to get epoxy on the pin spring or other terminus moving parts.)

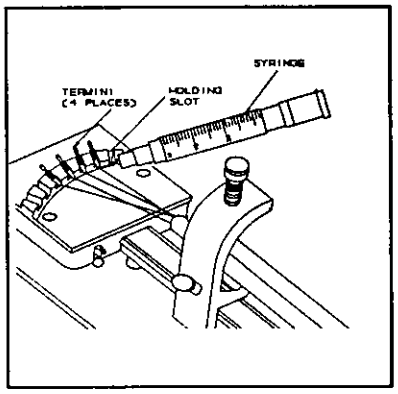


FIGURE 5A1-7. Applying epoxy to terminus.

Step 6 - Turn curing fixture on and cure epoxy for a minimum of 20 minutes at 248°F (120°C).

Step 7 - Turn curing fixture off and, when cool, remove termini from holding slots with tweezers and release cable.

Step 8 - **WARNING:** Wear safety glasses when scoring fiber to avoid possible eye injury.

Score fiber close to terminus tip and at epoxy bead using one short light stroke with cleaving tool (see figure 5A1-8). (NOTE: Do not break fiber with cleaving tool.) Pull off fiber with a gentle, straight pull.

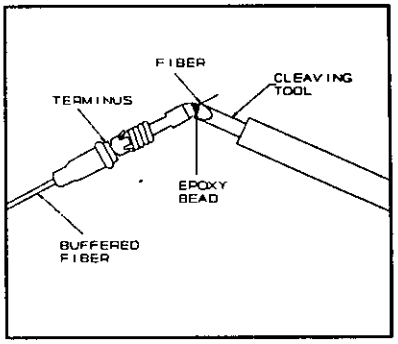


FIGURE 5A1-8. Scoring fiber.

Step 9 - Proceed to 3.2.4 below.



Source: https://assist.dla.mil -- Downloaded: 2016-12-31T21:23Z
Check the source to verify that this is the current version before use.

3.2.3.2 Metal and ceramic crimp termini.

Step 1 - Twist kevlar around buffered fiber and feed through larger opening of crimp sleeve.

Step 2 - Apply a small amount of epoxy to end of OFCC jacket and slide sleeve over end of jacket.

Step 3 - Slide terminus, base first, onto syringe tip (see figure 5A1-9). Depress plunger and slowly inject epoxy into terminus until it escapes out of bushing,forming a small bead. (NOTE: Do not overfill. Be extremely careful not to get epoxy on the pin spring or other terminus moving parts.)

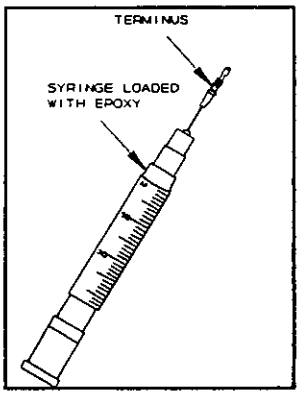


FIGURE 5A1-9. Injecting epoxy into terminus.

Step 4 - Remove terminus from syringe and using a wipe dampened with alcohol, wipe away any epoxy on outer diameter of bushing without disturbing epoxy bead.

Step 5 - Feather kevlar evenly around crimp sleeve and insert fiber into base of terminus gently working it through until it seats against shoulder (see figure 5A1-10). Terminus should bottom out in crimp sleeve. Do not allow fiber to slip back.

Step 6 - Crimp sleeve over kevlar and terminus close to main body using crimp tool.

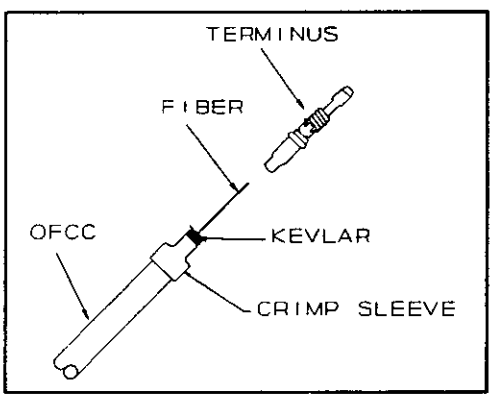


FIGURE 5A1-10. Inserting fiber.

Step 7 - Trim kevlar back to terminus using kevlar shears. Verify that kevlar does not protrude excessively from under crimp sleeve. Excessive kevlar will cause terminus to not seat properly in finished connector. If excessive kevlar protrudes from under sleeve, trim back.



Source: https://assist.dla.mil -- Downloaded: 2016-12-31T21:23Z
Check the source to verify that this is the current version before use.

Step 8 - Check to ensure there is a small bead of epoxy where the fiber protrudes from the bushing. If necessary, add a small amount of epoxy to form bead (see figure 5A1-11).

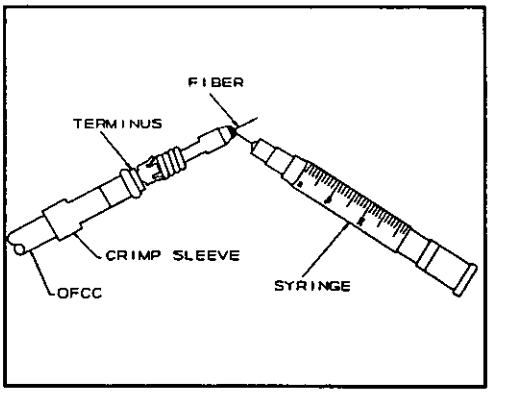


FIGURE 5A1-11. Applying epoxy to fiber.

Step 9 - Place termini on curing fixture (see figure 5A1-12). Turn fixture on and cure epoxy for a minimum of 20 minutes at 248°F (120°C).

Step 10 - Turn curing fixture off and, when cool, remove termini from holding slot with tweezers and release cable.

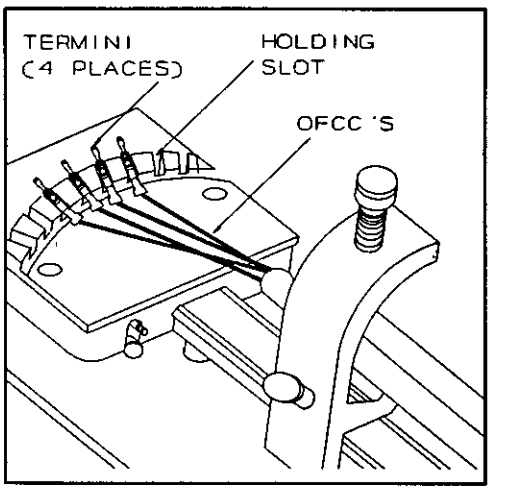


FIGURE 5A1-12. Termini on curing fixture.



Source: https://assist.dla.mil -- Downloaded: 2016-12-31T21:23Z
Check the source to verify that this is the current version before use.

Step 11 - **WARNING:** Wear safety glasses when scoring fiber to avoid possible eye injury.

Score fiber close to terminus tip and at epoxy bead using one short light stroke with cleaving tool (see figure 5A1-13). (NOTE: Do not break fiber with cleaving tool.) Pull off fiber with a gentle, straight pull.

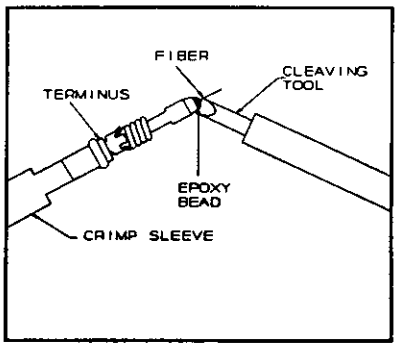


FIGURE 5A1-13. Scoring fiber.

Step 12 - Proceed to 3.2.4 below.

3.2.4 Polishing fiber ends. Hand polishing is the preferred method of polishing termini. Procedures for hand polishing are contained herein. Machine polishing may be used as an alternate method, provided the following requirements are satisfied:

a. Manufacturer's instructions will be rigidly adhered to, except that the polishing papers or disks shall be 5 $\mu$m and 1 $\mu$m, as used in hand polishing.

b. The machine polished terminus shall undergo the same quality check used for manual polished terminus and described herein.

NOTE: Polishing tools are different for metal and ceramic termini. Proceed to 3.2.4.1 for polishing fibers terminated in metal termini. Proceed to 3.2.4.2 for polishing fibers terminated in ceramic termini.



Source: https://assist.dla.mil -- Downloaded: 2016-12-31T21:23Z
Check the source to verify that this is the current version before use.

3.2.4.1 Polishing fibers terminated in metal termini.

3.2.4.1.1 Metal terminus polishing tool calibration.

Step 1 - Release detent lever on polishing tool and rotate knurled carrier ring counterclockwise. Turn cradle assembly counterclockwise and remove from polishing tool (see figure 5A1-14).

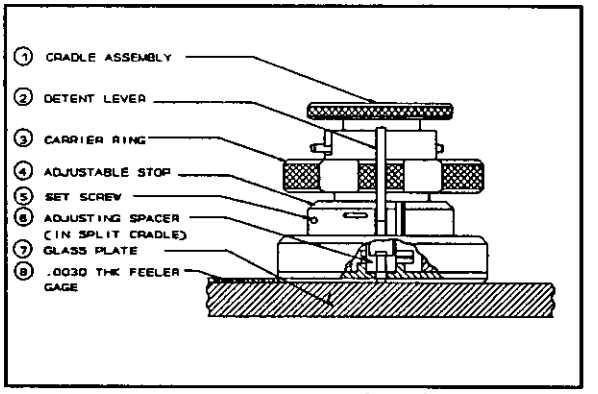


FIGURE 5A1-14. Polishing tool.

Step 2 - Remove retaining sleeve from cradle and separate cradle halves. Place adjusting spacer into cradle half and replace other cradle half and install retaining sleeve (see figure 5A1-15).

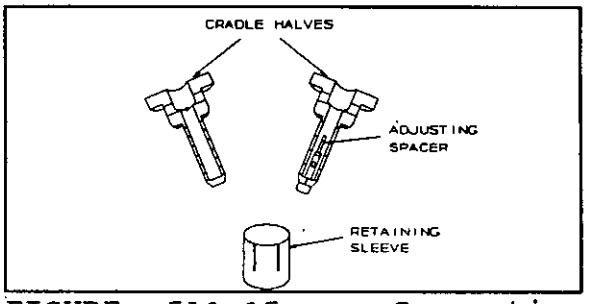


FIGURE 5A1-15. Separating cradle halves.

Step 3 - Insert cradle into terminus polishing tool by pushing cradle down while rotating clockwise until it locks in place.

Step 4 - Loosen two set screws in adjustable stop with allen wrench.

Step 5 - Place detent lever in first detent slot.

Step 6 - Place feeler gage and polishing tool on glass plate and rotate carrier ring clockwise until base of tool makes contact with feeler gage.

Step 7 - Tighten set screws with allen wrench. Recheck to make sure base of tool is still in contact with feeler gage.



Source: https://assist.dla.mil -- Downloaded: 2016-12-31T21:23Z
Check the source to verify that this is the current version before use.

Step 8 - Remove cradle assembly from polishing tool. Remove retaining sleeve, separate halves and remove adjusting spacer.

Step 9 - Place terminus and buffered fiber into cradle half and replace other cradle half and install retaining sleeve.

Step 10 - Insert cradle into terminus polishing tool, rotate clockwise and lock in place.

Step 11 - Tape the remaining OFCC's to strain relief support with masking tape and insert remaining termini into terminus holder on carrier assembly (see figure 5A1-16). (NOTE: Do not set base of polishing tool onto any surface other than polishing paper.)

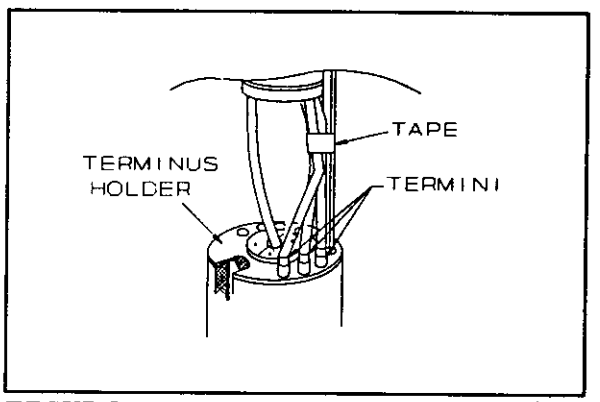


FIGURE 5A1-16. Inserting terminus assemblies.

Step 12 - Proceed to 3.2.4.1.2 below.

3.2.4.1.2 Polishing fibers - metal termini.

Step 1 - Clean glass polishing plate, backs of polishing papers, and surface of polishing tool using wipe dampened with alcohol. Blow all surfaces dry with air.



Source: https://assist.dla.mil -- Downloaded: 2016-12-31T21:23Z
Check the source to verify that this is the current version before use.

Step 2 - Rotate adjustable carrier fully counter-clockwise until detent lever is against pin. Place 5 μm polishing paper onto glass plate and start polishing terminus with very light pressure (the weight of the tool) using figure-8 motions. While polishing, slowly rotate adjustable carrier counterclockwise until detent lever snaps into first detent slot (see figure 5A1-17). First polish is complete when epoxy bead is almost gone. Clean terminus and polishing tool using wipe dampened with alcohol and blow dry with air.

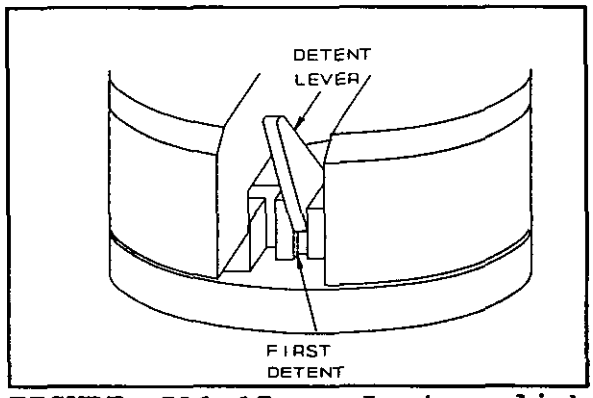


FIGURE 5A1-17. Last polish position.

Step 3 - Replace 5 μm polishing paper with 1 μm polishing paper and wet completely with water. Set detent lever to polish slot (second position) by pinching lever while rotating carrier clockwise. Polish terminus with very light pressure using figure-8 motions. Inspect terminus frequently using eye loupe and cease polishing when all epoxy is gone and there is no evidence of scratches or other defects.

Step 4 - Remove terminus from tool and clean both terminus and tool with wipe dampened with alcohol and blow dry with air. Repeat above steps for all termini.

Step 5 - Proceed to 3.2.5 below.


Source: https://assist.dla.mil -- Downloaded: 2016-12-31T21:23Z
Check the source to verify that this is the current version before use.

3.2.4.2 Polishing fibers terminated in ceramic termini.

3.2.4.2.1 Inserting ceramic terminus into polishing tool.

Step 1 - Rotate top half of ceramic polishing tool 90 degrees counterclockwise and separate from base.

Step 2 - Place end of terminus insertion tool over base of terminus with buffered fiber laid in tool channel (see figure 5A1-18).

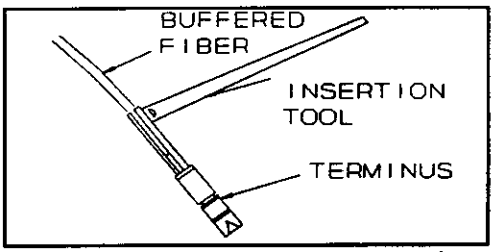


FIGURE 5A1-18. Placing terminus in insertion tool.

Step 3 - Insert terminus in center of polishing tool top. Apply pressure with insertion tool until terminus snaps into place. Remove tool by pulling straight back (see figure 5A1-19). (NOTE: Difficulty in inserting terminus into polishing tool may indicate epoxy on outside of terminus which must be removed before proceeding.)

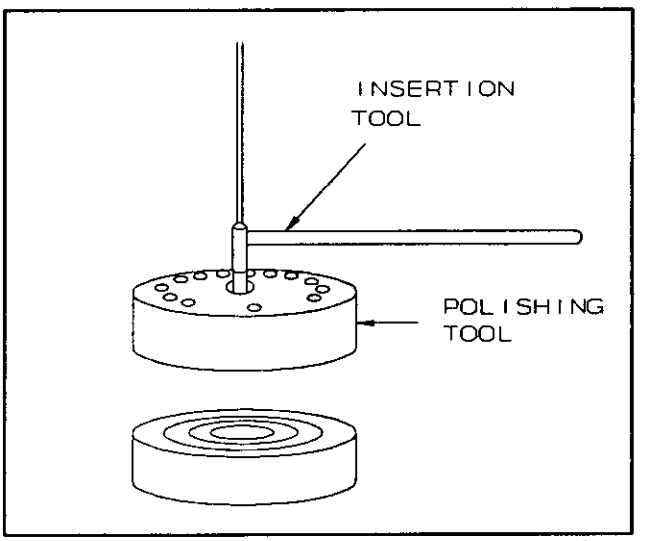


FIGURE 5A1-19. Inserting terminus in tool.

Step 4 - Install top half of polishing tool on bottom half and rotate clockwise (90 degrees) until it locks in place. Insert remaining termini into terminus holder.

Step 5 - Proceed to 3.2.4.2.2 below.



Source: https://assist.dla.mil -- Downloaded: 2016-12-31T21:23Z
Check the source to verify that this is the current version before use.

3.2.4.2.2 Polishing fibers - ceramic termini.

Step 1 - Clean glass polishing plate, backs of polishing papers, and surface of polishing tool using wipe dampened with alcohol. Blow all surfaces dry with air.

Step 2 - Place 5 μm polishing paper onto glass plate and start polishing terminus with very light pressure (the weight of the tool) using figure-8 motions. First polish is complete when a slight epoxy haze can be seen in terminus tip. Since polishing time varies with size of epoxy bead, inspect terminus tip frequently. Whenever polishing tool is lifted, remove grit from tool and terminus with air. When polishing is complete, clean terminus and tool using wipe dampened with alcohol and blow dry with air.

Step 3 - Replace 5 μm paper with 1 μm paper. Wet paper and start polishing with very light pressure using figure-8 motions. Inspect terminus frequently using eye loupe and cease polishing when epoxy is gone and there is no evidence of scratches or other defects.

Step 4 - Rotate top of polishing tool counterclockwise (90 degrees) and separate from base. Insert terminus removal tool into terminus cavity of polishing tool and press on hilt of removal tool until it clicks into place (see figure 5A1-20). Depress plunger and slide terminus out of polishing tool. Clean terminus and polishing tool with wipe dampened with alcohol and blow dry with air. Repeat above steps for all termini.

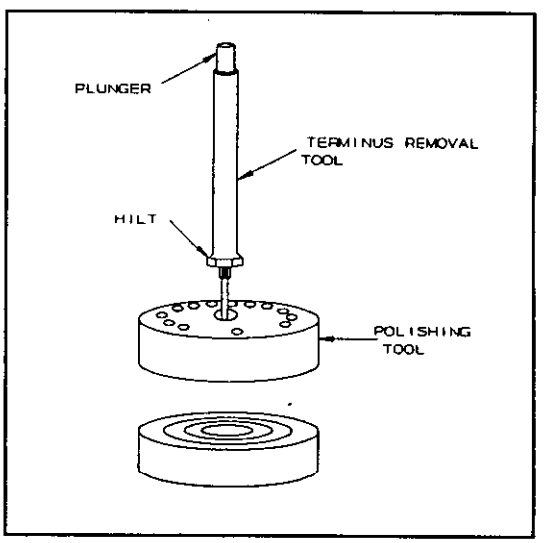


FIGURE 5A1-20. Removing terminus from polishing tool.

Step 5 - Proceed to 3.2.5 below.



Source: https://assist.dla.mil -- Downloaded: 2016-12-31T21:23Z
Check the source to verify that this is the current version before use.

3.2.5 Quality check.

Step 1 - Examine termini with optical microscope to ensure optical surface is flat and free of scratches, pits, chips, and fractures. If defects are present, repeat polishing procedure or reterminate (see figure 5A1-21). (NOTE: A high intensity back light may be used to further illuminate fiber.)

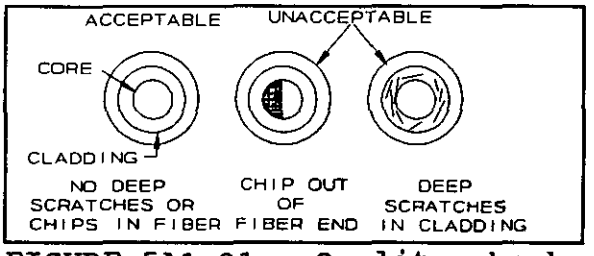


FIGURE 5A1-21. Quality check.

3.2.6 Installation of terminus into connector insert.

Step 1 - Place end of terminus insertion tool over base of terminus with buffered fiber laid in tool channel (see figure 5A1-22).

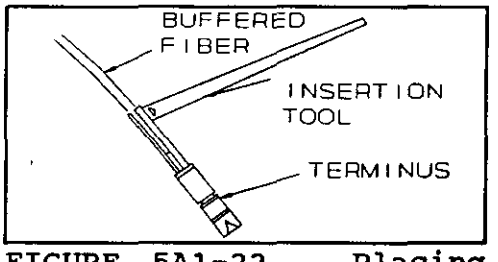


FIGURE 5A1-22. Placing terminus in insertion tool.

Step 2 - Install insert into connector body. Place terminus in proper cavity in rear of connector insert. Apply pressure with insertion tool until terminus snaps into place (see figure 5A1-23). Remove tool by pulling straight back. (NOTE: A properly inserted terminus will have some axial "play" within the insert cavity.)

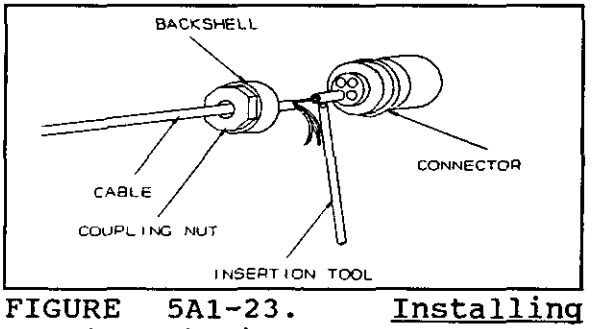


FIGURE 5A1-23. Installing terminus in insert.



Source: https://assist.dla.mil -- Downloaded: 2016-12-31T21:23Z
Check the source to verify that this is the current version before use.

NOTE: Socket termini will require installation of alignment sleeves after seating. Proceed to step 3 below for metal socket termini. Proceed to step 4 below for ceramic termini.

Step 3 - Place shallow recess of metal socket terminus alignment sleeve over tapered end of alignment sleeve installing and removal tool and press sleeve into socket terminus cavity in face of insert (see figure 5A1-24). Press until sleeve seats over metal terminus.

**CAUTION:** Do not rotate tool after sleeve is installed in insert.

Remove tool by pulling straight back. Proceed to step 5 below.

Step 4 - Place tapered end of ceramic socket terminus alignment sleeve installing and removal tool into alignment sleeve and press sleeve into socket terminus cavity in face of insert (see figure 5A1-24). Press until sleeve snaps onto groove on ceramic terminus body.

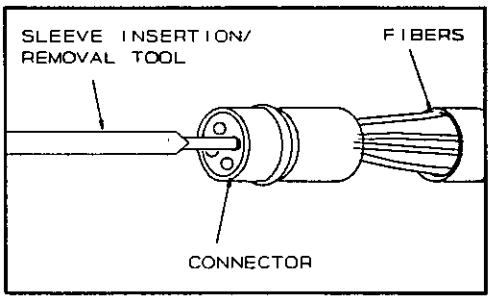


FIGURE 5A1-24. Installing alignment sleeve.

**CAUTION:** Do not rotate tool after sleeve is installed in insert.

Remove tool by pulling straight back. Proceed to step 5 below.

Step 5 - Repeat above steps for all termini.

Step 6 - Proceed to 3.2.7 only if termini are to be removed. Proceed to 3.2.8 for completion of assembly.



Source: https://assist.dla.mil -- Downloaded: 2016-12-31T21:23Z
Check the source to verify that this is the current version before use.

3.2.7 Removal of termini from connector insert.

NOTE: Proceed to step 1 or 2 below for metal and ceramic socket termini, respectively. Proceed to step 3 below for pin termini.

Step 1 - **CAUTION:** Do not rotate tool while sleeve is in insert.

Remove alignment sleeves from metal socket termini using metal terminus alignment sleeve installing and removal tool by inserting removal end into alignment sleeve, then pressing in and pulling out. Proceed to step 3 below.

Step 2 - **CAUTION:** Do not rotate tool while sleeve is in insert.

Remove alignment sleeves from ceramic socket termini using ceramic terminus alignment sleeve installing and removal tool by inserting removal end (hook) into alignment sleeve so that it catches sleeve lip and pulling straight back.

Step 3 - Insert terminus removal tool into terminus cavity of insert and press on hilt of tool until it clicks into place (see figure 5A1-25). Depress plunger to slide terminus out rear of insert.

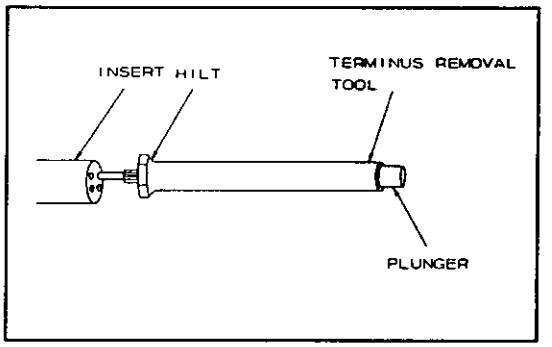


FIGURE 5A1-25. Removing termini from insert.

3.2.8 Assembly of backshell.

Step 1 - Slide backshell body forward and screw it onto connector until tight.

Step 2 - Remove tape securing kevlar strength members and slide ferrule up to rear of backshell. Comb kevlar over ferrule and retape.

Step 3 - Slide spacer up to ferrule over kevlar.

Step 4 - Trim kevlar approximately 0.25 inch (6 mm) using kevlar shears behind spacer and remove tape.



Source: https://assist.dla.mil -- Downloaded: 2016-12-31T21:23Z
Check the source to verify that this is the current version before use.

Step 5 - Apply lube and slide "O"-ring up behind spacer, keeping kevlar strands between "O"-ring and spacer.

Step 6 - Slide backnut over kevlar strain relief and screw tightly to backshell body with adjustable wrench.

Step 7 - Slide sheath forward and screw onto backshell body. Tighten with spanner wrench.

Step 8 - Install protective plastic dust cap.

3.3 Procedure II. Method 5A1-2 Installation of connectors with strain relief. This method shall be used to install all MIL-C-28876 connectors except those with part numbers M28876/1, M28876/6 and M28876/11 onto fiber optic cable.

3.3.1 The equipment and materials in table 5A1-III shall be used to perform this procedure:

TABLE 5A1-III. Equipment and materials.

| Description | Quantity |
|---|---|
| Safety glasses | 1 |
| Ruler | 1 |
| Cable jacket stripping tool (AT&T Comcode 105-114-581 or equal) | 1 |
| Kevlar shears (Clauss 86 1/2S or equal) | 1 |
| OFCC strip tool (AT&T Comcode 104-278-478, P/N 700A or equal) | 1 |
| Buffer strip tool (K-Miller Tools F/O 103S or equal) | 1 |
| "O"-ring tool (Hughes 4569365H or equal) | 1 |
| "O"-ring lubricant (Bray Cote 609 or equal) | As required |
| Container (for alcohol rinse) | 1 |
| Torque wrench and adapter (Hughes 4569737H and 4369735H or equal) | 1 |
| Scissors (Clauss 194 or equal) | 1 |
| Crimp tool (Hughes 1143130-7S or equal) | 1 |
| Epoxy (Hysol 0151 or equal) | As required |



Source: https://assist.dla.mil -- Downloaded: 2016-12-31T21:23Z
Check the source to verify that this is the current version before use.

TABLE 5A1-III. Equipment and materials - continued.

| Description | Quantity |
|---|---|
| Syringe (Beckton-Dickinson 9585 or equal) | As required |
| Dispensing needles (AT&T Comcode 105-157-879 or equal) | As required |
| Curing fixture (Hughes 4565035-1H or equal) | 1 |
| Tweezers | 1 |
| Cleaver (AT&T Comcode 103-808-770, P/N 975A or equal) | 1 |
| Polishing tool metal termini (Hughes 4569100-3H or equal) | 1 |
| Polishing tool ceramic termini (Hughes 456833-4H or equal) | 1 |
| Adjusting spacer (Hughes 1143343S or equal) | 1 |
| Allen wrench, 3/64 inch | 1 |
| Feeler gage, 0.0030 thick (Hughes 4569403H or equal) | 1 |
| Glass polishing fixture (Hughes 456910CH or equal) | 1 |
| 7X eye loupe (AT&T Comcode 403-663-347 or equal) | 1 |
| Polishing paper (5 μm aluminum oxide, foam backed) (AT&T Comcode 105-488-175 or equal) | As required |
| Polishing paper (1 μm aluminum oxide, mylar backed) (AT&T Comcode 105-076-798 or equal) | As required |
| Optical microscope 400X (Leica Fiber-Vue 31-22 or equal) | 1 |
| High intensity incandescent back light (Roxter Corp. Model 6490 or equal) | 1 |
| Heat gun (Raychem 500B or equal) | 1 |
| Terminus insertion tool 90°(Hughes 1143042-2S or equal) | 1 |
| Terminus insertion tool (Hughes 1093784S or equal) | 1 |



Source: https://assist.dla.mil -- Downloaded: 2016-12-31T21:23Z
Check the source to verify that this is the current version before use.

TABLE 5A1-III. Equipment and materials - continued.

| Description | Quantity |
|---|---|
| Terminus removal tool (Hughes TMF16RT006 or equal) | 1 |
| Alignment sleeve installation and removal tool (metal termini)(Hughes 1143895S or equal) | 1 |
| Alignment sleeve installation and removal tool (ceramic termini)(Hughes 4568335H or equal) | 1 |
| Adjustable wrench, 1.5 inch opening | 1 |
| Spanner wrench (Hughes 4569365H or equal) | 1 |
| Alcohol bottle with alcohol/2-propanol or equal (sealable type) | 1 |
| Water bottle (sealable type) | 1 |
| Canned air (Fisher Scientific Co. Cat. No. 15-232-20 or equal)(or compressed air) | As Required |
| Wipes (TEXWIPE TX404T or equal) | As Required |
| Masking tape | As Required |
| Protective caps (plastic) | As Required |

3.3.2 Cable preparation.

NOTE: The connector is received assembled with "O"-rings installed, with the exception of the kevlar retaining "O"-ring which is taped to the backshell exterior.

Step 1 - Ensure cable is correct type as specified on applicable cable diagram.

Step 2 - Measure cable to required length. Then add sufficient slack to allow for at least two reconnections of replacement connectors.

Step 3 - Clean outer cable jacket that will be in contact with the connector and backshell with wipe dampened with alcohol and blow dry with air.



Source: https://assist.dla.mil -- Downloaded: 2016-12-31T21:23Z
Check the source to verify that this is the current version before use.

NOTE: Keep cable and accessories free from oil, dirt, and grease throughout installation procedure. If cleaning is necessary, use wipe dampened with alcohol and blow dry with air.

3.3.3 Securing strain relief.

Step 1 - Slide the strain relief onto cable in the order indicated (see figure 5A1-26):

a. Compression nut with boot

b. Shrink tubing

c. Strain relief housing

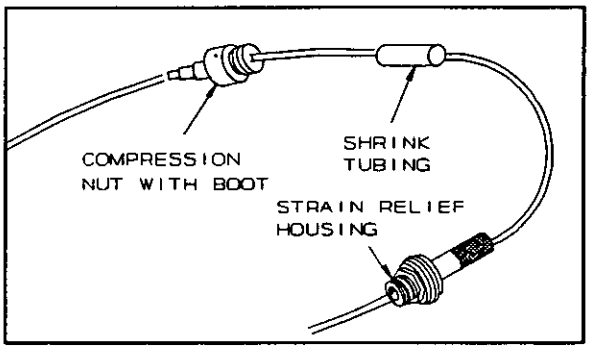


FIGURE 5A1-26. Connector assembly.

Step 2 - Mark cable approximately 6 inches (152 mm) from end and strip back outer cable jacket using cable stripper. Fold back kevlar strength members and temporarily tape to cable outer jacket.

**CAUTION:** Do not cut or nick OFCC jackets.

Cut off exposed central member using kevlar shears.

Step 3 - Remove water blocking material and clean OFCC's using wipe dampened with alcohol and blow dry with air.

Step 4 - Remove tape from kevlar strength members and slide compression ring over strength members and down to end of cable jacket. (NOTE: Grooved side of collar should face strain relief coupling.) Fold kevlar strength members back over compression ring and cable in direction of strain relief housing.



Source: https://assist.dla.mil -- Downloaded: 2016-12-31T21:23Z
Check the source to verify that this is the current version before use.

Step 5 - Remove black "O"-ring (taped to backshell exterior) and apply lubricant. Place on "O"-ring installation tool by forcing "O"-ring up cone to larger end of tool (see figure 5A1-27).

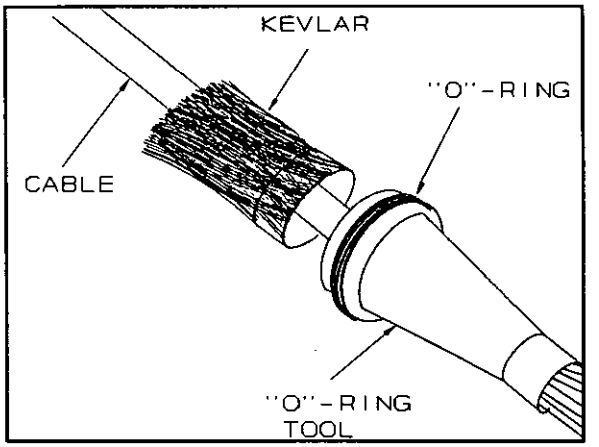


FIGURE 5A1-27. Installing "O"-ring.

Step 6 - Slide "O"-ring tool up fibers (larger opening first) over the compression collar (and kevlar strength members) and force "O"-ring over compression ring onto kevlar. Remove tool.

Step 7 - Fold kevlar strength members forward over "O"-ring and compression collar. Tape kevlar members together at end to ease installation of compression nut.

Step 8 - Slide strain relief housing up cable to compression collar. Gently feed fibers and taped kevlar through compression nut and slide nut up to housing. Thread compression nut onto housing while pulling kevlar taut.

Step 9 - Tighten compression nut to 25 inch-pounds (2.75 N·m) using wrench and torque tool (see figure 5A1-28). Remove wrench and tool.

Step 10 - Remove tape and trim kevlar down to face of compression nut using kevlar shears.

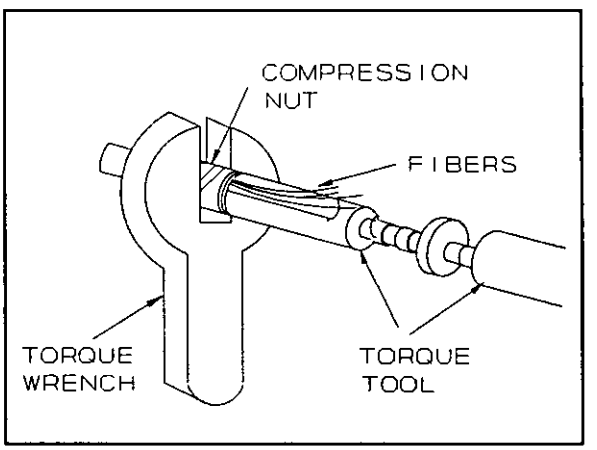


FIGURE 5A1-28. Tightening compression nut.



Source: https://assist.dla.mil -- Downloaded: 2016-12-31T21:23Z
Check the source to verify that this is the current version before use.

3.3.4 Fiber preparation.

Step 1 - Trim OFCC's to dimension A in table 5A1-IV using scissors (see figure 5A1-29).

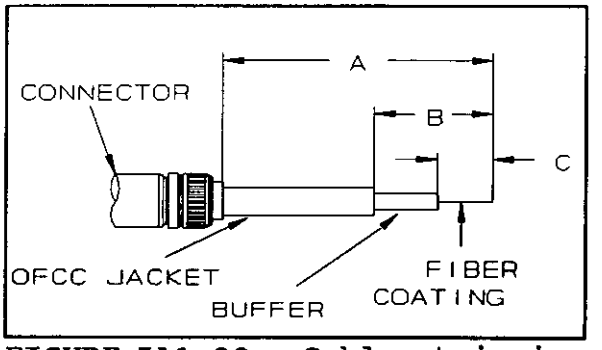


FIGURE 5A1-29. Cable stripping dimensions.

Step 2 - Remove OFCC jackets to dimension B in table 5A1-IV using OFCC stripper. (NOTE: For non-crimp type termini only, trim kevlar back to OFCC jacket.) Trim OFCC kevlar so that approximately 3 mm extends beyond OFCC jacket.

TABLE 5A1-IV. Cable stripping dimensions.

| Connector 2, 4, and 8 termini | Backshell sizes 11, 13, and 15 | Dimensions in (mm) | | |
|---|---|---|---|---|
| | | A | B | C |
| Plug/Receptacle non-crimp termini | Straight | 3.80 (97) | 2.80 (71) | 0.60 (15) |
| Plug/Receptacle crimp termini | Straight | 3.80 (97) | 1.20 (30) | 0.60 (15) |
| Plug/Receptacle non-crimp termini | 45° and 90° | 5.10 (130) | 4.10 (104) | 0.60 (15) |
| Plug/Receptacle crimp termini | 45° and 90° | 5.10 (130) | 1.20 (30) | 0.60 (15) |

Step 3 - **WARNING:** Wear safety glasses when removing buffer to avoid possible eye injury.

Remove fiber buffers back to dimension C in table 5A1-IV using buffer stripper. (Note: Remove buffer in small (approximately 0.15 inch (4 mm)) sections at a time.)

Step 4 - **CAUTION:** The unbuffered fiber is in its most vulnerable state. Take extreme care not to damage fiber. Breakage of any one fiber from this point until the connector is completely assembled will require repetition of 3.3.2 through 3.3.4 in order to maintain equal lengths of all fibers.



Source: https://assist.dla.mil -- Downloaded: 2016-12-31T21:23Z
Check the source to verify that this is the current version before use.

Remove fiber coating residue with wipe dampened with alcohol. Wipe one time from end of buffer towards end of fiber.

3.3.5 Installation of termini onto fibers.

NOTE: Terminus can be either metal or ceramic crimp and non-crimp types. The metal terminus is used on a multimode fibers only. The ceramic termini are used on single mode and multimode fibers. All termini use epoxy to secure the fiber; the crimp types feature an additional crimp sleeve that captures the kevlar strength members of the OFCC's.

Step 1 - Clean termini by shaking them in a container filled with alcohol and blow dry with air.

Step 2 - Remove divider from 2-part epoxy package and mix until both parts are blended into a smooth uniform color (see figure 5A1-30).

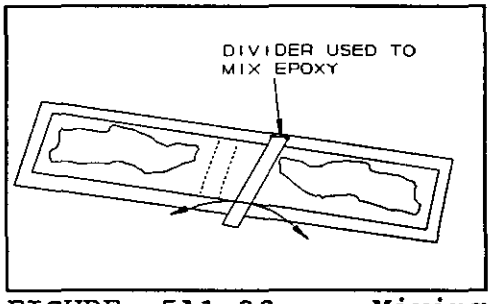


FIGURE 5A1-30. Mixing epoxy.

Step 3 - Install syringe tip, remove plunger, fold epoxy package in half, cut corner and squeeze epoxy into syringe. A 0.75 inch (19 mm) length of epoxy will be enough for about eight termini. Replace plunger.

Step 4 - **WARNING:** Wear safety glasses when dispensing epoxy to avoid possible eye injury.

Remove air pockets by holding tip of syringe upward and dispensing epoxy onto a wipe until it runs free and clear.

Step 5 - Proceed to 3.3.5.1 below to complete installation of non-crimp termini. Proceed to 3.3.5.2 below to complete installation of crimp termini.



Source: https://assist.dla.mil -- Downloaded: 2016-12-31T21:23Z
Check the source to verify that this is the current version before use.

3.3.5.1 Metal and ceramic non-crimp termini.

Step 1 - Slide terminus, base first, onto syringe tip (see figure 5A1-31). Depress plunger and slowly inject epoxy into terminus until it escapes out of bushing, forming a small bead. (NOTE: Do not overfill. Be extremely careful not to get epoxy on pin spring or other terminus moving parts.)

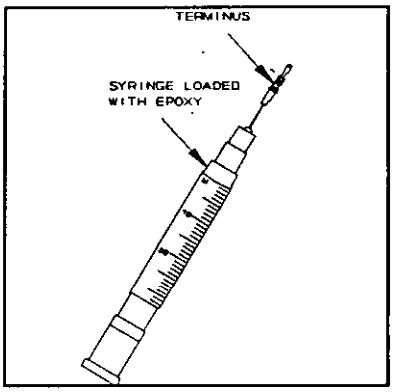


FIGURE 5A1-31. Injecting epoxy into terminus.

Step 2 - Remove terminus from syringe and using a wipe dampened with alcohol wipe away any epoxy on outer diameter of bushing without disturbing epoxy bead.

Step 3 - Insert fiber into base end of bushing and seat against shoulder (see figure 5A1-32). Do not allow fiber to slip back.

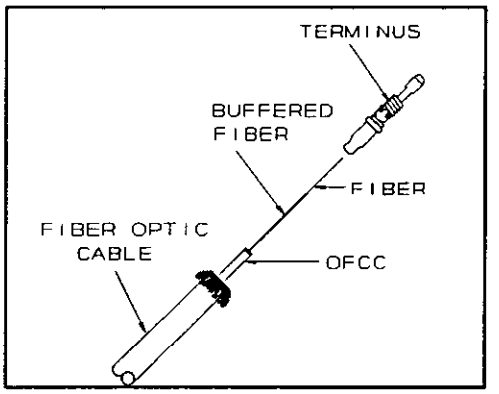


FIGURE 5A1-32. Inserting fiber.



Source: https://assist.dla.mil -- Downloaded: 2016-12-31T21:23Z
Check the source to verify that this is the current version before use.

Step 4 - Check to ensure there is a small bead of epoxy where fiber protrudes from bushing. If necessary, add a small amount of epoxy to form bead (see figure 5A1-33).

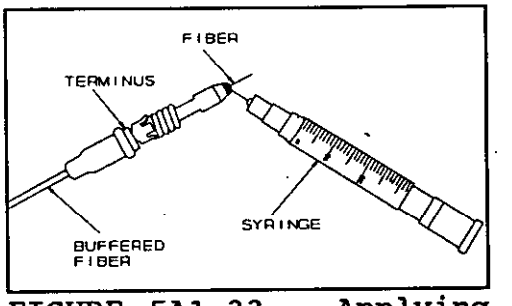


FIGURE 5A1-33. Applying epoxy to fiber.

Step 5 - Place termini on curing fixture and apply epoxy to fiber where it enters base of terminus (see figure 5A1-34). (NOTE: Make sure epoxy does not run onto outer diameter of bushing.)

Step 6 - Turn curing fixture on and cure epoxy for a minimum of 20 minutes at 320°F (160°C).

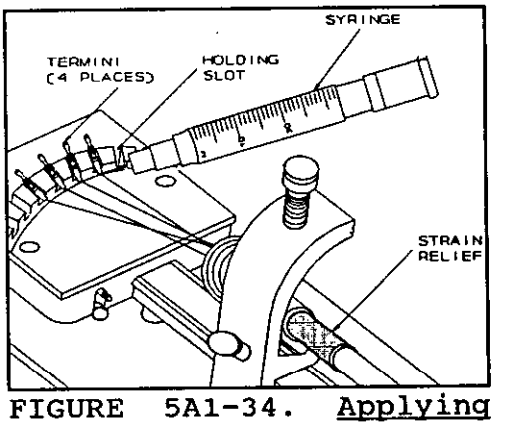


FIGURE 5A1-34. Applying epoxy to terminus.

Step 7 - Turn curing fixture off and, when cool, remove termini from holding slots with tweezers and release cable.

Step 8 - Score fiber close to the terminus tip and at epoxy bead using one short light stroke with cleaving tool (see figure 5A1-35). (NOTE: Do not break fiber with cleaving tool.) Pull off fiber with a gentle, straight pull.

Step 9 - Proceed to 3.3.6 below.

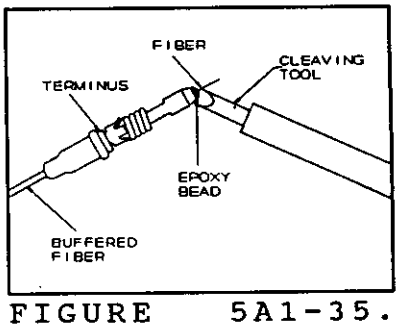


FIGURE 5A1-35. Scoring fiber.



Source: https://assist.dla.mil -- Downloaded: 2016-12-31T21:23Z
Check the source to verify that this is the current version before use.

3.3.5.2 Metal and ceramic crimp termini.

Step 1 - Twist kevlar around buffered fiber and feed through larger opening of crimp sleeve.

Step 2 - Apply a small amount of epoxy to end of OFCC jacket and slide sleeve over end of jacket.

Step 3 - Slide terminus, base first, onto syringe tip (see figure 5A1-36). Depress plunger and slowly inject epoxy into terminus until it escapes out of bushing,forming a small bead. (NOTE: Do not overfill. Be extremely careful not to get epoxy on pin spring or other terminus moving parts.)

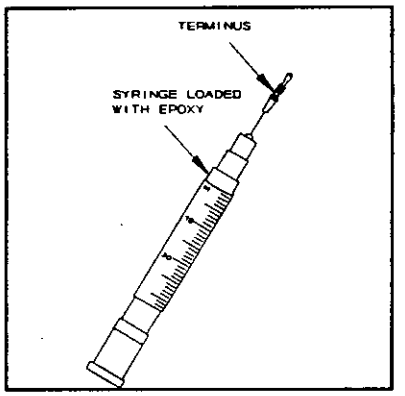


FIGURE 5A1-36. Injecting epoxy into terminus.

Step 4 - Remove terminus from syringe and using a wipe dampened with alcohol, wipe away any epoxy on outer diameter of bushing without disturbing epoxy bead.

Step 5 - Feather kevlar evenly around crimp sleeve and insert fiber into base of terminus gently working it through until it seats against shoulder (see figure 5A1-37). Terminus should bottom out in crimp sleeve. Do not allow fiber to slip back.

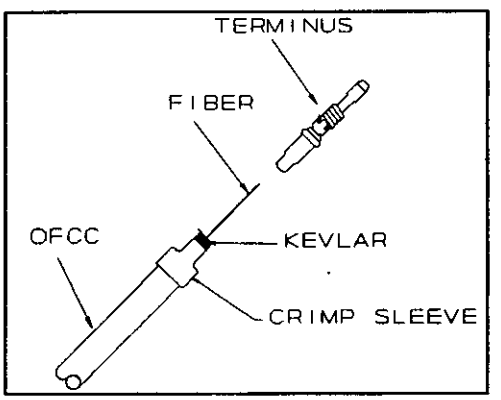


FIGURE 5A1-37. Inserting fiber.

Step 6 - Crimp sleeve over kevlar and terminus close to main body using crimp tool.

Step 7 - Trim kevlar back to terminus using kevlar shears. Verify that kevlar does not protrude excessively from under crimp sleeve. Excessive kevlar will prevent terminus from seating properly in finished connector. If excessive kevlar protrudes from under sleeve, trim back.


Source: https://assist.dla.mil -- Downloaded: 2016-12-31T21:23Z
Check the source to verify that this is the current version before use.

Step 8 - Check to ensure there is a small bead of epoxy where fiber protrudes from the bushing. If necessary, add a small amount of epoxy to form bead (see figure 5A1-38).

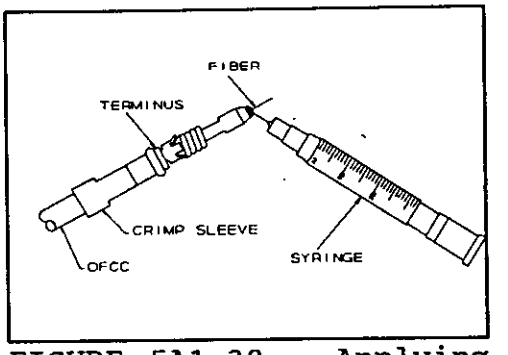


FIGURE 5A1-38. Applying epoxy to fiber.

Step 9 - Place termini on curing fixture (see figure 5A1-39). Turn curing fixture on and cure epoxy for a minimum of 20 minutes at 248°F (120°C).

Step 10 - Turn curing fixture off and, when cool, remove termini from holding slot with tweezers and release cable.

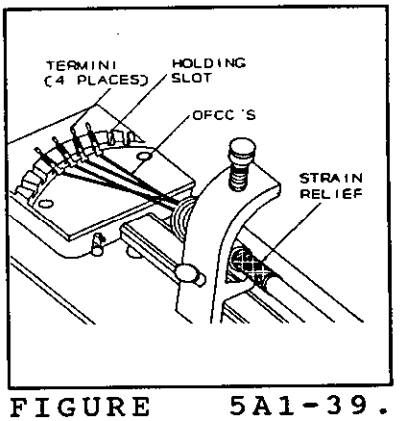


FIGURE 5A1-39. Termini on curing fixture.

Step 11 - **WARNING:** Wear safety glasses when scoring fiber to prevent possible eye injury.

Score fiber close to terminus tip and at epoxy bead using one short light stroke with cleaving tool (see figure 5A1-40). (NOTE: Do not break fiber with cleaving tool.) Pull off fiber with a gentle, straight pull.

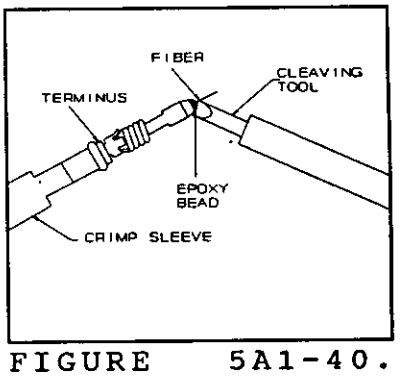


FIGURE 5A1-40. Scoring fiber.

Step 12 - Proceed to 3.3.6 below.



Source: https://assist.dla.mil -- Downloaded: 2016-12-31T21:23Z
Check the source to verify that this is the current version before use.

3.3.6 Polishing fiber ends. Hand polishing is the preferred method of polishing termini. Procedures for hand polishing are contained herein. Machine polishing may be used as an alternate method, provided the following requirements are satisfied:

a. Manufacturer's instructions will be rigidly adhered to, except that the polishing papers or disks shall be 5 μm and 1 μm, as used in hand polishing.

b. The machine polished terminus shall undergo the same quality check used for hand polished terminus as described herein.

NOTE: Polishing tools are different for metal and ceramic termini. Proceed to 3.3.6.1 for polishing fibers terminated in metal termini. Proceed to 3.3.6.2 for polishing fibers terminated in ceramic termini.

3.3.6.1 Polishing fibers terminated in metal termini.

3.3.6.1.1 Metal terminus polishing tool calibration.

Step 1 - Release detent lever on polishing tool and rotate knurled carrier ring counterclockwise. Turn cradle assembly counterclockwise and remove from polishing tool (see figure 5A1-41).

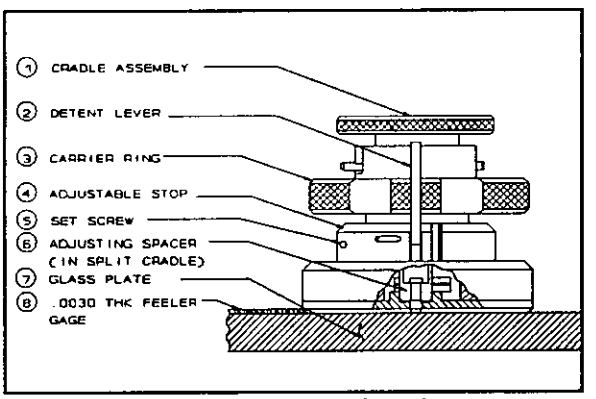


FIGURE 5A1-41. Polishing tool.



Source: https://assist.dla.mil -- Downloaded: 2016-12-31T21:23Z
Check the source to verify that this is the current version before use.

Step 2 - Remove retaining sleeve from cradle and separate cradle halves. Place adjusting spacer into cradle half and all replace other cradle half and install retaining sleeve (see figure 5A1-42).

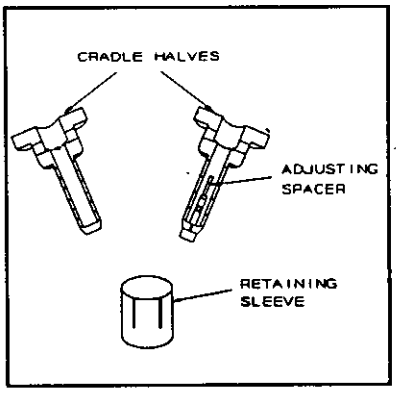


FIGURE 5A1-42. Separating cradle halves.

Step 3 - Insert cradle into terminus polishing tool by pushing cradle down while rotating clockwise until it locks in place.

Step 4 - Loosen two set screws in adjustable stop with allen wrench.

Step 5 - Place detent lever in first detent slot.

Step 6 - Place feeler gage and polishing tool on glass plate and rotate carrier ring clockwise until base of tool makes contact with feeler gage.

Step 7 - Tighten set screws with allen wrench. Recheck to make sure base of tool is still in contact with feeler gage.

Step 8 - Remove cradle assembly from polishing tool. Remove retaining sleeve, separate halves and remove adjusting spacer.

Step 9 - Place terminus and buffered fiber into cradle half and replace other cradle half and install retaining sleeve.

Step 10 - Insert cradle into terminus polishing tool, rotate clockwise and lock in place.

Step 11 - Place fiber optic cable and strain relief in polishing tool strain relief support and tighten screw using allen wrench (see figure 5A1-43).

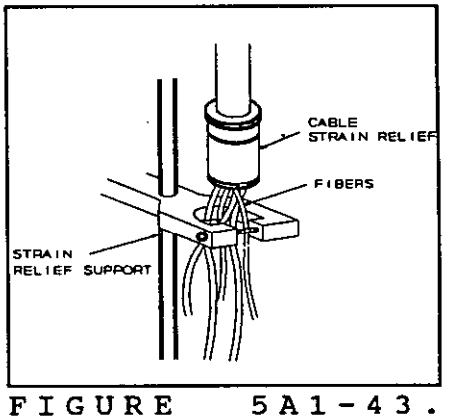


FIGURE 5A1-43. Installing cable in strain relief support.



Source: https://assist.dla.mil -- Downloaded: 2016-12-31T21:23Z
Check the source to verify that this is the current version before use.

Step 12 - Insert remaining termini into terminus holder on carrier assembly (see figure 5A1-44). (NOTE: Do not set base of polishing tool onto any surface other than polishing paper.)

Step 13 - Proceed to 3.3.6.1.2 below.

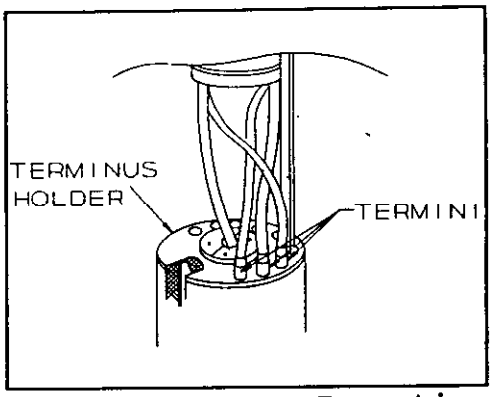


FIGURE 5A1-44. Inserting termini.

3.3.6.1.2 Polishing fibers - metal termini.

Step 1 - Clean glass polishing plate, backs of polishing paper, and surface of polishing tool using wipe dampened with alcohol. Blow all surfaces dry with air.

Step 2 - Rotate adjustable carrier fully counter-clockwise until detent lever is against pin. Place 5 μm polishing paper onto glass plate and start polishing terminus with very light pressure (the weight of the tool) using figure-8 motions. While polishing, slowly rotate adjustable carrier clockwise until detent lever snaps into first detent slot (see figure 5A1-45). First polish is complete when epoxy bead is almost gone. Clean terminus and polishing tool using wipe dampened with alcohol and blow dry with air.

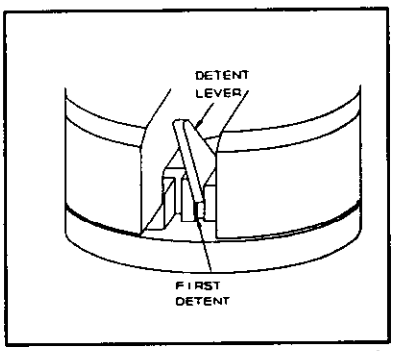


FIGURE 5A1-45. Last polish position.

Step 3 - Replace 5 μm polishing paper with 1 μm paper and wet completely with water. Set detent lever to polish slot (second position) by pinching lever while rotating carrier clockwise. Polish terminus with very light pressure using figure-8 motions. Inspect terminus frequently using eye loupe and cease polishing when all epoxy is gone and there is no evidence of scratches or other defects.


Source: https://assist.dla.mil -- Downloaded: 2016-12-31T21:23Z
Check the source to verify that this is the current version before use.

Step 4 - Remove terminus from tool and clean both terminus and tool with wipe dampened with alcohol and blow dry with air. Repeat above steps for all termini.

Step 5 - Proceed to 3.3.7 below.

3.3.6.2 Polishing fibers terminated in ceramic termini.

3.3.6.2.1 Inserting ceramic terminus into polishing tool.

Step 1 - Rotate top half of ceramic polishing tool 90 degrees counterclockwise and separate from base.

Step 2 - Place end of terminus insertion tool over base of terminus with fiber laid in tool channel (see figure 5A1-46).

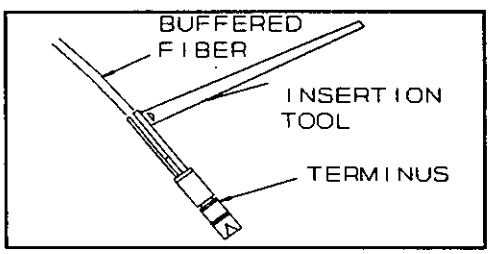


FIGURE 5A1-46. Placing terminus in insertion tool.

Step 3 - Insert terminus in center of polishing tool top. Apply pressure with insertion tool until terminus snaps into place. Remove tool by pulling straight back (see figure 5A1-47). (NOTE: Difficulty in inserting terminus into polishing tool may indicate epoxy on outside of terminus which must be removed before proceeding.)

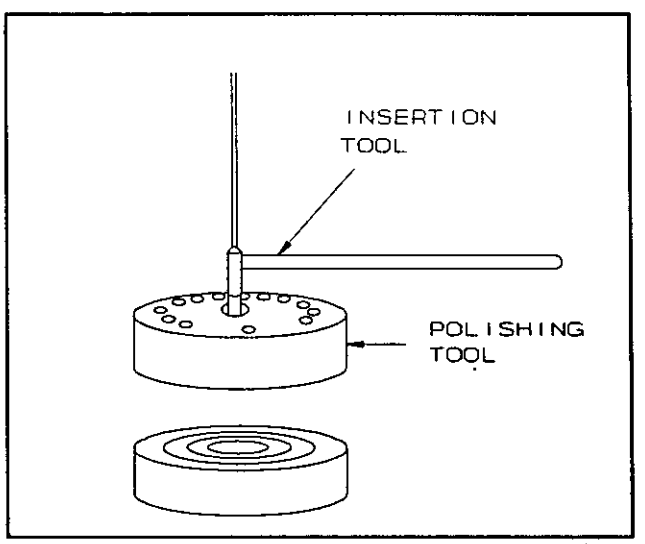


FIGURE 5A1-47. Inserting terminus in tool.


Source: https://assist.dla.mil -- Downloaded: 2016-12-31T21:23Z
Check the source to verify that this is the current version before use.

Step 4 - Install top half of polishing tool on bottom half and rotate clockwise (90 degrees) until it locks in place. Insert remaining termini into terminus holder.

Step 5 - Proceed to 3.3.6.2.2 below.

3.3.6.2.2 Polishing fibers - ceramic termini.

Step 1 - Clean glass polishing plate, backs of polishing papers, and surface of polishing tool using wipe dampened with alcohol. Blow all surfaces dry with air.

Step 2 - Place 5 μm polishing paper onto glass plate and start polishing terminus with very light pressure (the weight of the tool) using figure-8 motions. First polish step is complete when a slight epoxy haze can be seen in terminus tip. Since polishing time varies with size of epoxy bead, inspect terminus tip frequently. Whenever polishing tool is lifted, remove grit from tool and terminus with air. When polishing is complete, clean terminus and tool using wipe dampened with alcohol and blow dry with air.

Step 3 - Replace 5 μm paper with 1 μm paper. Wet paper and start polishing with very light pressure using figure-8 motions. Inspect terminus frequently using eye loupe and cease polishing when epoxy is gone and there is no evidence of scratches or other defects.



Source: https://assist.dla.mil -- Downloaded: 2016-12-31T21:23Z
Check the source to verify that this is the current version before use.

Step 4 - Rotate top of polishing tool counterclockwise (90 degrees) and separate from base. Insert terminus removal tool into terminus cavity of polishing tool and press on hilt of removal tool until it clicks into place (see figure 5A1-48). Depress plunger and slide terminus out of polishing tool. Clean terminus and polishing tool with wipe dampened with alcohol and blow dry with air. Repeat above steps for all termini.

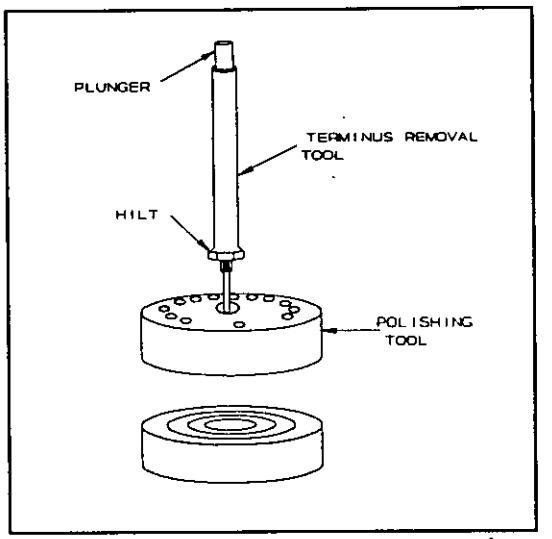


FIGURE 5A1-48. Removing terminus from polishing tool.

Step 5 - Proceed to 3.3.7 below.

3.3.7 Quality check.

Step 1 - Examine termini with optical microscope to ensure optical surface is flat and free of scratches, pits, chips, and fractures. If defects are present, repeat polishing procedure or reterminate (see figure 5A1-49). (NOTE: A high intensity back light may be used to further illuminate fiber.)

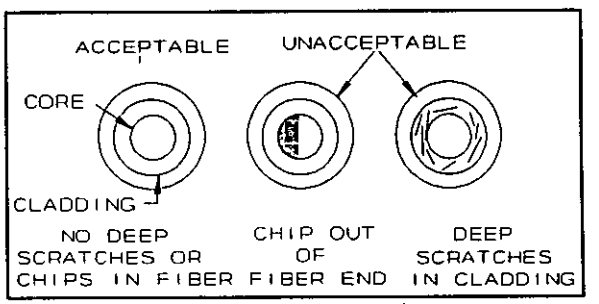


FIGURE 5A1-49. Quality check.

3.3.8 Installation of termini into connector insert.

Step 1 - Slide shrink tubing over knurled end of strain relief and up to shoulder.

**CAUTION:** Do not overheat cable. Prolonged exposure of jacket to temperatures above 320°F (160°C) may damage cable jacket.



Source: https://assist.dla.mil -- Downloaded: 2016-12-31T21:23Z
Check the source to verify that this is the current version before use.

Starting at hardware area, hold heat gun approximately 4 inches (102 mm) from tubing and apply heat until tubing shrinks to tight fit.

NOTE: Proceed to step 2 for straight (in-line) connectors. Proceed to step 3 for 45° or 90° (angle) connectors.

Step 2 - Fit spacing shafts of insert into notches in face of strain relief until they snap into place (see figure 5A1-50).

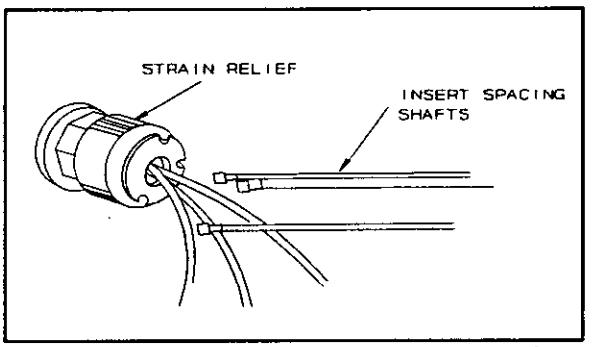


FIGURE 5A1-50. Installing spacing shafts.

Step 3 - Place end of terminus insertion tool over base of terminus with fiber laid in tool channel (see figure 5A1-51).

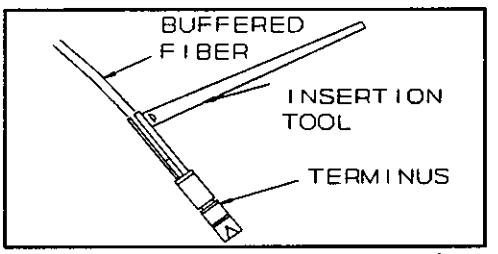


FIGURE 5A1-51. Placing terminus in insertion tool.

Step 4 - Place terminus in proper cavity in rear of connector insert. Apply pressure with insertion tool until terminus snaps into place (see figure 5A1-52). Remove tool by pulling straight back. (NOTE: A properly inserted terminus will have some axial "play" within the insert cavity.)

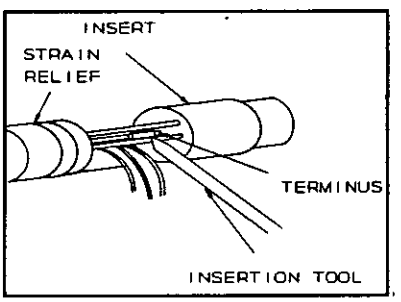


FIGURE 5A1-52. Installing terminus in insert.



Source: https://assist.dla.mil -- Downloaded: 2016-12-31T21:23Z
Check the source to verify that this is the current version before use.

NOTE: Socket termini will require installation of alignment sleeves after seating. Proceed to step 5 below for metal socket termini. Proceed to step 6 below for ceramic termini.

Step 5 - Place shallow recess of metal socket terminus alignment sleeve over tapered end of alignment sleeve installing and removal tool and press sleeve into socket terminus cavity in face of insert (see figure 5A1-53). Press until sleeve seats over metal terminus.

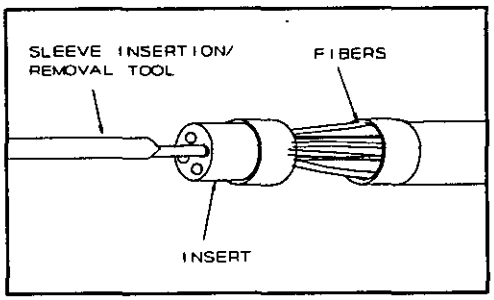


FIGURE 5A1-53. Installing alignment sleeve.

**CAUTION:** Do not rotate tool after sleeve is installed in insert.

Remove tool by pulling straight back. Proceed to step 7 below.

Step 6 - Place tapered end of ceramic terminus alignment sleeve installing and removal tool into alignment sleeve and press sleeve into socket terminus cavity in face of insert. Press until sleeve snaps onto groove on ceramic terminus body.

**CAUTION:** Do not rotate tool after sleeve is installed in insert.

Remove tool by pulling straight back. Proceed to step 7 below.

Step 7 - Repeat above steps for all termini.

Step 8 - Proceed to 3.3.9 only if termini are to be removed. Proceed to 3.3.10 for completion of assembly.

3.3.9 Removal of termini from connector insert.

NOTE: Proceed to step 1 or 2 below for metal and ceramic socket termini, respectively. Proceed to step 3 below for pin termini.



Source: https://assist.dla.mil -- Downloaded: 2016-12-31T21:23Z
Check the source to verify that this is the current version before use.

Step 1 - **CAUTION:** Do not rotate tool while sleeve is in insert.

Remove alignment sleeves from metal socket termini using metal terminus alignment sleeve installing and removal tool by inserting removal end into alignment sleeve, then pressing in and pulling out. Proceed to step 3 below.

Step 2 - **CAUTION:** Do not rotate tool while sleeve is in insert.

Remove alignment sleeves from ceramic socket termini using ceramic terminus alignment sleeve installing and removal tool by inserting removal end (hook) into sleeve so it catches sleeve lip and pulling straight back.

Step 3 - Insert terminus removal tool into terminus cavity of insert and press on hilt of tool until it clicks into place (see figure 5A1-54). Depress plunger to slide terminus out rear of insert.

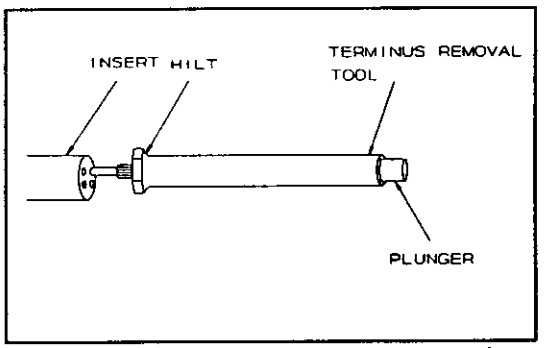


FIGURE 5A1-54. Removing termini from insert.



Source: https://assist.dla.mil -- Downloaded: 2016-12-31T21:23Z
Check the source to verify that this is the current version before use.

3.3.10 Assembly of backshell.

Step 1 - Slide insert/strain relief/cable assembly into backshell (see figure 5A1-55). When insert bottoms, rotate backshell until key on insert aligns with keyway in backshell. When aligned, seat insert.

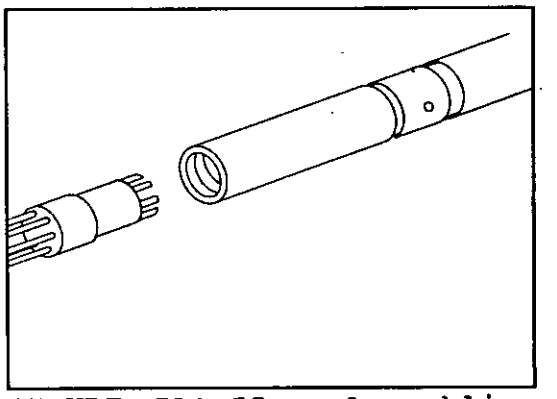

FIGURE 5A1-55. Assembling backshell.

Step 2 - Slide backnut and boot up cable and thread nut onto backshell.

Step 3 - Tighten backnut with spanner wrench and torque wrench to 60 inch-pounds.

Step 4 - Install protective plastic dust cap.



Source: https://assist.dla.mil -- Downloaded: 2016-12-31T21:23Z
Check the source to verify that this is the current version before use.

# METHOD 5B1

## SINGLE TERMINUS CONNECTOR INSTALLATION

1. SCOPE.

1.1 Scope. This method describes a procedure for installing MIL-C-83522 single terminus (light duty) connectors onto fiber optic cable.

2. REQUIRED EQUIPMENT AND MATERIALS.

2.1 The equipment and materials in table 5B1-I shall be used to perform this procedure:

TABLE 5B1-I. Equipment and materials.

| Description | Quantity |
|---|---|
| Safety glasses | 1 |
| Ruler | 1 |
| Cable jacket stripping tool (AT&T Comcode 105-114-581 or equal) | 1 |
| Kevlar shears (Clauss 86 1/2S or equal) | 1 |
| OFCC strip tool (AT&T Comcode 104-278-478, P/N 700A or equal) | 1 |
| Buffer strip tool (K-Miller Tools F/O 103S or equal) | 1 |
| Holder block (AT&T Comcode 104-229-398, P/N 971A1 or equal) | 1 |
| Epoxy (Hysol 0151 or equal) | As required |
| Syringe (Beckton-Dickinson 9585 or equal) | As required |
| Dispensing needles (AT&T Comcode 105-157-879 or equal) | As required |
| Piano wire (nominal diameter <125 μm) | As required |
| Cure adapters (AT&T Comcode 106-040-397, P/ND-182300 or equal) | As required |
| Crimper (AT&T Comcode 104-389-903, P/N 102A or equal) | 1 |


Source: https://assist.dla.mil -- Downloaded: 2016-12-31T21:23Z
Check the source to verify that this is the current version before use.

TABLE 5B1-I. Equipment and materials - continued.

| Description | Quantity |
|---|---|
| Crimper (OFTI 500-4CPT-1005 or equal) | 1 |
| Crimper (AMP 58433-4 or equal) | 1 |
| Heat gun (Raychem 500B or equal) | 1 |
| Curing oven (AT&T Comcode 105-537-690 or equal) | 1 |
| Cleaver (AT&T Comcode 103-808-770, P/N 975A or equal) | 1 |
| Glass polishing plate (AT&T Comcode 105-075-618 or equal) | 1 |
| Polishing tool (AT&T Comcode 105-246-185, P/N D-181618 or equal) | 1 |
| Polishing paper (5 μm aluminum oxide, foam backed) (AT&T Comcode 105-488-175 or equal) | As required |
| 7X eye loupe (AT&T Comcode 403-663-347 or equal) | 1 |
| Polishing paper (1 μm aluminum oxide, mylar backed) (AT&T Comcode 105-076-798 or equal) | As required |
| Optical microscope 400X (Leica Fiber-Vue 31-22 or equal) | 1 |
| High intensity incandescent back light (Roxter Corp. Model 6490 or equal) | 1 |
| Alcohol bottle with alcohol/2-propanol or equal (sealable type) | 1 |
| Water bottle (sealable type) | 1 |
| Canned air (Fisher Scientific Co. Cat. No. 15-232-20 or equal)(or compressed air) | As Required |
| Wipes (TEXWIPE TX404T or equal) | As Required |
| Protective caps (plastic) | As Required |


Source: https://assist.dla.mil -- Downloaded: 2016-12-31T21:23Z
Check the source to verify that this is the current version before use.

3. PROCEDURE

3.1 Safety summary. The following safety precautions shall be observed:

a. Safety glasses shall be worn at all times when handling bare fibers or dispensing epoxy.

b. Do not touch ends of bare fiber. Wash hands thoroughly after handling bare fibers.

c. Avoid skin contact with epoxy adhesive.

d. Do not look into the end of a fiber until verifying that the fiber is not connected to a laser light source or LED.

3.2 Procedure.

3.2.1 Cable and fiber preparation.

Step 1 - Measure distance from insert block to farthest connection point in patch panel with the panel pulled out for connector installation. Add approximately 5 inches (127 mm) of additional slack for termination and for outer cable jacket entry into equipment.

Step 2 - Mark cable jacket and strip back outer jacket to mark using cable stripper.

**CAUTION:** Do not cut or nick OFCC jacket.

Cut off kevlar strength member and exposed central member, if present, using kevlar shears.

Step 3 - Remove water blocking material and clean OFCC's using wipe dampened with alcohol and blow dry with air.



Source: https://assist.dla.mil -- Downloaded: 2016-12-31T21:23Z
Check the source to verify that this is the current version before use.

Step 4 - Slip heat shrink tubing (with fiber identification), cable support (rubber boot or heat shrink tubing) and crimp sleeve over OFCC (see figure 5B1-1).

Step 5 - Measure and mark OFCC jacket approximately 1.1 inches (28 mm) from end.

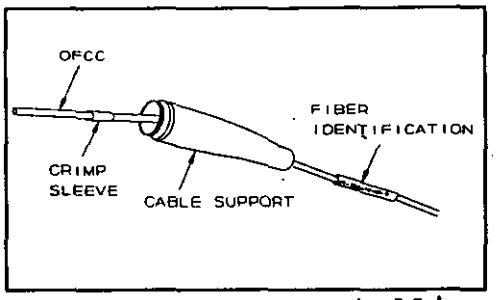


FIGURE 5B1-1. Installing sleeve and cable support - (typical).

Step 6 - Using OFCC strip tool, remove OFCC jacket back to mark.

Step 7 - Separate kevlar strands from buffered fiber and, using shears, trim strands to approximately 0.25 inch (6.4 mm) from jacket edge.

Step 8 - Measure and mark buffer a minimum of 0.65 inch (16.5 mm) from end.

Step 9 - **WARNING:** Wear safety glasses when removing buffer to avoid possible eye injury.

Using buffer stripper, remove buffer back to mark. (NOTE: Remove buffer in small sections (approximately 0.15 inch (4 mm)) at a time.)

Step 10 - Remove fiber coating with wipe dampened with alcohol. Wipe one time from end of buffer towards end of fiber.



Source: https://assist.dla.mil -- Downloaded: 2016-12-31T21:23Z
Check the source to verify that this is the current version before use.

Step 11 - Check dimensions of prepared OFCC (see figure 5B1-2). If dimensions are acceptable, proceed to 3.3.2 below. If dimensions are not acceptable, repeat steps 5 through 10 above.

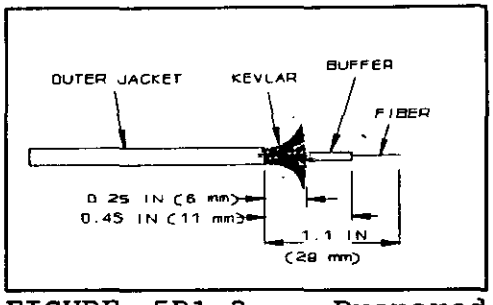


FIGURE 5B1-2. Prepared OFCC dimensions.

3.3.2 Installation of connectors onto fibers.

Step 1 - Ensure that hole in connector body is clear of any foreign matter. Use piano wire to clear hole if necessary. Clean connector with wipe dampened with alcohol and blow with air.

Step 2 - Remove divider from 2-part epoxy package and mix until both parts are blended into a smooth uniform color (see figure 5B1-3).

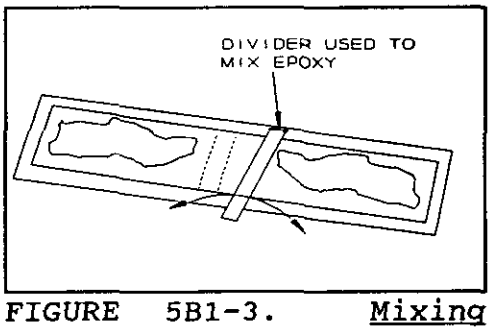


FIGURE 5B1-3. Mixing epoxy.

Step 3 - Install syringe tip, remove plunger, fold epoxy package in half, cut corner and squeeze epoxy into syringe. A 0.75 inch (19 mm) length of epoxy will be enough for about 12 connectors. Replace plunger.

Step 4 - **WARNING:** Wear safety glasses when dispensing epoxy to avoid possible eye injury.

Remove air pockets by holding tip of syringe upward and dispensing epoxy onto wipe until it runs free and clear.



Source: https://assist.dla.mil -- Downloaded: 2016-12-31T21:23Z
Check the source to verify that this is the current version before use.

Step 5 - Insert tip of syringe into back of connector body until syringe tip bottoms out and slowly inject epoxy into connector until a small bead appears on connector tip. (NOTE: Epoxy bead should only contact flat surface of connector tip. Bead should cover not less than half of the flat surface of multimode connector tip, or the entire flat surface of single mode connector tip.)

Step 6 - When epoxy bead reaches correct size, release pressure on plunger, wait approximately five seconds, and remove syringe (see figure 5B1-4).

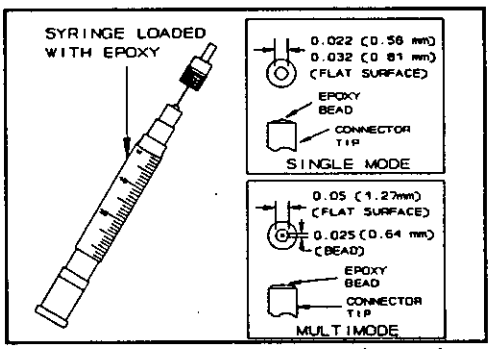


FIGURE 5B1-4. Injecting epoxy into connector body.

Step 7 - Apply thin coating of epoxy to kevlar strands and approximately 0.50 inch (12.7 mm) of buffer.

Step 8 - Apply a thin coating of epoxy to approximately 0.13 inch (3.2 mm) of connector barrel (see figure 5B1-5).

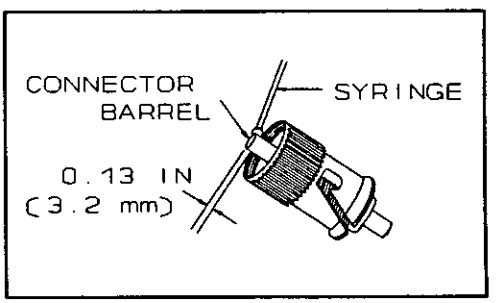


FIGURE 5B1-5. Applying epoxy to connector barrel.


Source: https://assist.dla.mil -- Downloaded: 2016-12-31T21:23Z
Check the source to verify that this is the current version before use.

Step 9 - Insert fiber into connector and rotate fiber slowly to assist fiber penetration into connector. When fiber is seated, pull back slightly and watch for movement at tip to ensure that fiber is not broken. Reseat fiber into connector so that OFCC jacket butts against connector barrel (see figure 5B1-6).

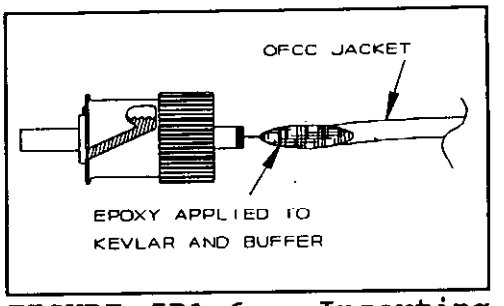


FIGURE 5B1-6. Inserting fiber into connector.

Step 10 - Ensure that epoxy bead established in step 6 has not been disturbed. If it has, it can be reestablished by dispensing epoxy around the protruding fiber using syringe.

Step 11 - Carefully place cure adapter over fiber and attach to connector body. Fan out kevlar over connector barrel and slip crimp sleeve over OFCC jacket, epoxy-coated kevlar, and connector barrel (see figure 5B1-7).

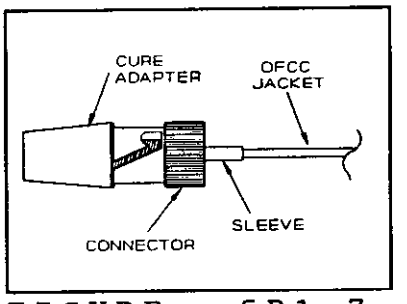


FIGURE 5B1-7. Sliding cable sleeve over connector barrel.



Source: https://assist.dla.mil -- Downloaded: 2016-12-31T21:23Z
Check the source to verify that this is the current version before use.

Step 12 - NOTE: There are three different crimping tools, each to be used only with the designated manufacturer's connector (see table 5B1-I). Place applicable crimping tool over sleeve and crimp against barrel. Rotate the connector 90 degrees and crimp again (see figure 5B1-8).

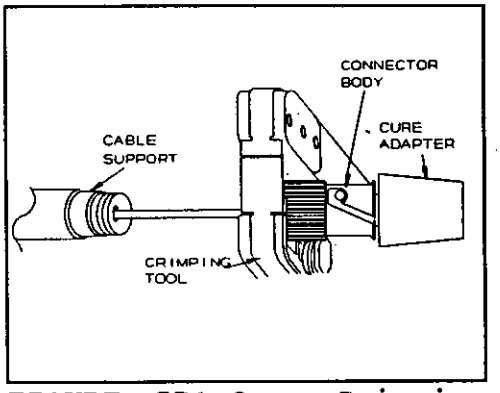


FIGURE 5B1-8. Crimping connector sleeve.

NOTE: Proceed to step 13 for connectors with rubber boots. Proceed to step 14 for connectors with heat-shrink tubing.

Step 13 - Apply a drop of epoxy onto rubber boot threads or spring clip, slip support over crimped sleeve and screw it onto connector body or push until it locks into place, as applicable.

Step 14 - **CAUTION:** Do not overheat cable. Prolonged exposure of jacket to temperatures above 320°F (160°C) may damage cable jacket.

Apply a drop of epoxy onto crimp sleeve, slide cable support over crimp sleeve and, holding heat gun approximately 4 inches (102 mm) from support, shrink support over OFCC and crimp sleeve.

Step 15 - Slide fiber identification tubing up cable near cable support and shrink over OFCC using heat gun.

3.2.3 Curing epoxy.

Step 1 - Energize curing fixture. When READY lamp illuminates, place connector, with adapter, into fixture port. (NOTE: To avoid pulling fiber out of connector, grasp the connector assembly only at the connector body or cable support.) Cure for a minimum of 20 minutes, remove connector from fixture and place in holder block to cool.

NOTE: The fiber must not protrude beyond the end of the cure adapter. If it does, trim fiber end so it does not.


Source: https://assist.dla.mil -- Downloaded: 2016-12-31T21:23Z
Check the source to verify that this is the current version before use.

Step 2 - **WARNING:** Wear safety glasses when scoring fiber to avoid possible eye injury.

When connector is cool, remove from block, and remove adapter taking care not to break fiber. Score fiber close to terminus tip and at epoxy bead using one short light stroke with cleaving tool (see figure 5B1-9). (NOTE: Do not break fiber with cleaving tool.) Pull off fiber with a gentle straight pull.

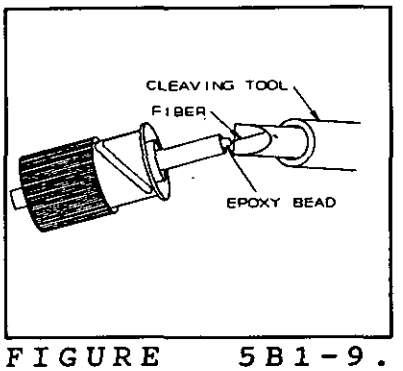


FIGURE 5B1-9. Scoring fiber.

3.2.4 Polishing fiber ends. Hand polishing is the preferred method of polishing connectors. Procedures for hand polishing are contained herein. Machine polishing may be used as an alternate method, provided the following requirements are satisfied:

a. Manufacturer's instructions will be rigidly adhered to, except that the polishing papers or disks shall be 5 μm and 1 μm, as used in hand polishing.

b. The machine polished connectors shall undergo the same quality check used for hand polished connectors as described herein.

Step 1 - Clean glass polishing plate, backs of polishing papers, surface of polishing tool, and connector tip using a wipe dampened with alcohol. Blow all surfaces dry with air.



Source: https://assist.dla.mil -- Downloaded: 2016-12-31T21:23Z
Check the source to verify that this is the current version before use.

Step 2 - Insert connector into polishing tool (see figure 5B1-10).

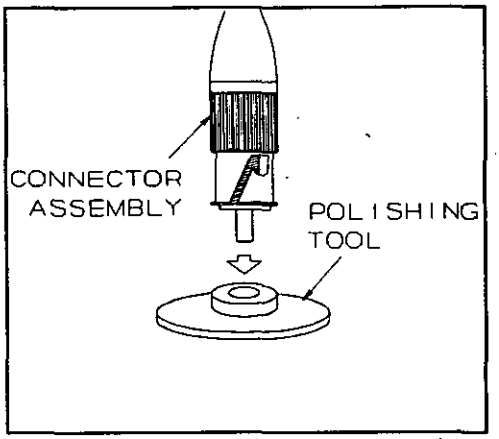


FIGURE 5B1-10. Inserting connector into polishing tool.

Step 3 - Place 5 μm polishing paper onto glass plate and start polishing connector with very light pressure (the weight of the tool) using figure-8 motions (see figure 5B1-11). Polish until the epoxy bead is almost gone. Since polishing time varies with size of epoxy bead, inspect connector tip frequently. Whenever polishing tool is lifted, remove grit from tool and paper with air.

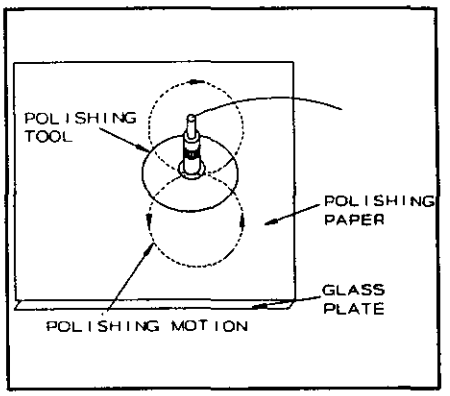


FIGURE 5B1-11. Polishing connector.

Step 4 - When polishing is complete, remove connector from polishing tool, clean both with wipe dampened in alcohol and blow dry with air. Replace connector in polishing tool.

Step 5 - Replace 5 μm polishing paper with 1 μm polishing paper. Wet approximately one quarter of the paper and start polishing with very light pressure, using figure-8 motions. (NOTE: Start and finish should be on same area of paper so as to gradually wear away and reduce grit for a finer polish.) Inspect connector tip frequently using eye loupe and cease polishing when epoxy is all gone and there is no evidence of scratches or other defects.



Source: https://assist.dla.mil -- Downloaded: 2016-12-31T21:23Z
Check the source to verify that this is the current version before use.

Step 6 - Remove connector from tool and clean using wipe dampened with alcohol and blow dry with air.

Step 7 - Proceed to step 3.2.5 below.

3.2.5 Quality check.

Step 1 - Examine connector with optical microscope to ensure optical surface is flat and free of scratches, pits, chips, and fractures. If defects are present, repeat polishing procedure or reterminate (see figure 5B1-12). (NOTE: A high intensity back light may be used to further illuminate fiber.)

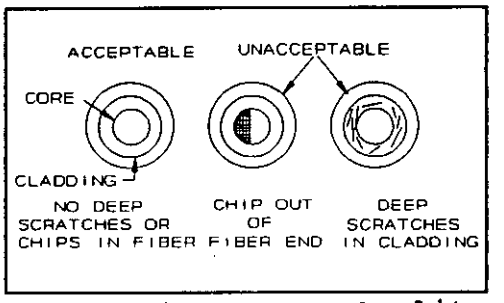


FIGURE 5B1-12. Quality check.



Source: https://assist.dla.mil -- Downloaded: 2016-12-31T21:23Z
Check the source to verify that this is the current version before use.

# METHOD 5C1

## MECHANICAL SPLICE FERRULE INSTALLATION

1. SCOPE.

1.1 Scope. This method describes a procedure for installing a MIL-S-24623/4 mechanical splice ferrule onto a fiber optic cable.

2. REQUIRED EQUIPMENT AND MATERIALS.

2.1 The equipment and materials in table 5C1-I shall be used to perform this procedure:

TABLE 5C1-I. Equipment and materials.

| Description | Quantity |
|---|---|
| Safety glasses | 1 |
| Ruler | 1 |
| Cable jacket stripping tool (AT&T Comcode 105-114-581 or equal) | 1 |
| Kevlar shears (Clauss 86 1/2S or equal) | 1 |
| OFCC strip tool (AT&T Comcode 104-278-478, P/N 700A or equal) | 1 |
| Buffer strip tool (K-Miller Tools F/O 103S or equal) | 1 |
| UV cure adhesive (AT&T D-181598 Comcode 105-205-660 or equal) | As required |
| Syringe (Beckton-Dickinson 9585 or equal) | As required |
| Dispensing needles (AT&T Comcode 105-157-879 or equal) | As required |
| UV curing lamp (AT&T Comcode 104-437-074 or equal) | 1 |
| UV absorbing glasses (AT&T Comcode 105-195-028 or equal) | 1 |
| Cleaver (AT&T Comcode 103-808-770, P/N 975A or equal) | 1 |
| Utility knife | 1 |


Source: https://assist.dla.mil -- Downloaded: 2016-12-31T21:23Z
Check the source to verify that this is the current version before use.

TABLE 5C1-I. Equipment and materials - continued.

| Description | Quantity |
|---|---|
| Polishing paper, 8 μm, aluminum oxide (AT&T Comcode 105-205-652 or equal) | As required |
| Glass polishing plate (AT&T Comcode 105-075-618 or equal) | 1 |
| Polishing tool (AT&T Comcode 104-030-507, P/N 992A or equal) | 1 |
| Polishing paper, 1 μm, aluminum oxide, mylar backed (AT&T Comcode 105-076-798 or equal) | As required |
| 7x eye loupe (AT&T Comcode 403-663-347 or equal) | 1 |
| High intensity incandescent back light (Roxter Model 6490 or equal) | 1 |
| Index matching gel (AT&T Comcode 402-698-302, P/N AT8955 or equal) | As required |
| Splice alignment clip tool (AT&T Comcode 104-030-523, P/N 994A or equal) | 1 |
| Splice alignment tool (AT&T Comcode 104-407-499, P/N 1011B or equal) | 1 |
| Test adapters | As required |
| Test jumpers | As required |
| Light source (3M Photodyne source driver 9XT, source module 1700-1300T or equal) | 1 |
| Power meter (3M Photodyne detector driver 22XLC, detector module model 585 or equal) | 1 |
| Splice compression tool (AT&T Comcode 104-401-294 or equal) | 1 |
| Splice tray (M24623/4-001) | 1 |
| Alcohol bottle with alcohol/2-propanol or equal (sealable type) | 1 |
| Water bottle (sealable type) | 1 |
| Canned air (Fisher Scientific Co. Cat. No. 15-232-20 or equal)(or compressed air) | As required |



Source: https://assist.dla.mil -- Downloaded: 2016-12-31T21:23Z
Check the source to verify that this is the current version before use.

TABLE 5C1-I. Equipment and materials - continued.

| Description | Quantity |
|---|---|
| Wipes (TEXWIPE TX404T or equal) | As required |
| Protective caps (plastic) | As required |

3. PROCEDURE.

3.1 Safety summary. The following safety precautions shall be observed:

a. Safety glasses shall be worn at all times when handling bare fibers or dispensing epoxy.

b. Do not touch ends of bare fiber. Wash hands thoroughly after handling bare fibers.

c. Do not look into the end of bare fiber until verifying that the fiber is not connected to a laser light source or LED.

d. Ultraviolet (UV) safety glasses shall be worn when using UV curing lamp.

3.2 Procedure.

3.2.1 Cable and fiber preparation.

Step 1 - Measure distance from insert block to farthest connection point in splice tray with the tray pulled out for splice installation. Add approximately 5 inches (127 mm) of additional slack for termination and for outer cable jacket entry into equipment.

Step 2 - Mark cable jacket and strip back outer jacket to mark using cable stripper.

**CAUTION:** Do not cut of nick OFCC jacket.

Cut off kevlar strength members and exposed central member, if present, using kevlar shears.

Step 3 - Remove water blocking material and clean OFCC's using a wipe dampened with alcohol and blow dry with air.



Source: https://assist.dla.mil -- Downloaded: 2016-12-31T21:23Z
Check the source to verify that this is the current version before use.

Step 4 - Slip heat shrink tubing with fiber identification over OFCC.

Step 5 - Measure distance from outer jacket of cable to the last tie down in the bundle before OFCC breakout, subtract approximately 2 inches (51 mm) and mark OFCC. Using OFCC stripper, remove OFCC jacket back to mark.

Step 6 - Separate kevlar strands from buffered fiber and, using kevlar shears, trim strands back to jacket edge.

Step 7 - Measure and mark buffer a minimum of 1 inch (25 mm) from end.

Step 8 - **WARNING:** Wear safety glasses when removing buffer to avoid possible eye injury.

Using buffer stripper, remove buffer back to mark. (NOTE: Remove buffer in small sections (approximately 0.15 inch (4 mm)) at a time.)

Step 9 - Remove fiber coating residue with wipe dampened with alcohol. Wipe one time from end to end of buffer towards end of fiber.

3.2.2 Installation of ferrules onto fibers.

Step 1 - Separate ferrules by grasping both sides of assembled pair with thumb and index fingers. Simultaneously pull and slightly bend ferrules until they separate. (NOTE: Do not twist ferrules during separation.)



Source: https://assist.dla.mil -- Downloaded: 2016-12-31T21:23Z
Check the source to verify that this is the current version before use.

Step 2 - Cover entire ferrule assembly with UV blocking shield if splicing will be performed in direct or bright sunlight or under bright fluorescent lamps.

Step 3 - Install syringe tip, remove plunger, fold adhesive package in half, cut corner and squeeze adhesive into syringe. A 0.75 inch (19 mm) length of adhesive will be enough for about 16 ferrules. Replace plunger.

Step 4 - **WARNING:** Wear safety glasses when dispensing epoxy to avoid possible eye injury.

Remove air pockets by holding tip of syringe upward and dispensing epoxy onto wipe until it runs free and clear.

Step 5 - Insert tip of syringe into back of ferrule until syringe tip bottoms out and slowly inject adhesive into ferrule until a small bead appears on ferrule tip (see figure 5C1-1). (NOTE: Do not overfill the ferrule as this may not allow fiber to be inserted into ferrule hole.) Remove syringe from ferrule and cover with wipe.

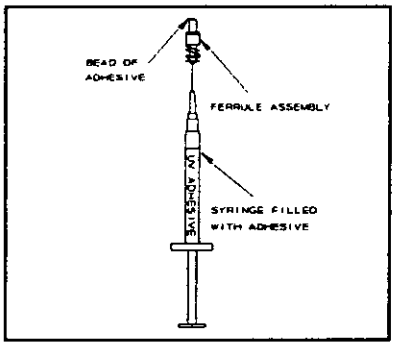


FIGURE 5C1-1. Injecting adhesive into ferrule.

Step 6 - Carefully insert stripped fiber into ferrule until buffer bottoms. Observe adhesive bead on ferrule tip (see figure 5C1-2). If bead is not present, use syringe to form bead. Wipe off any excess adhesive with a wipe dampened with alcohol.

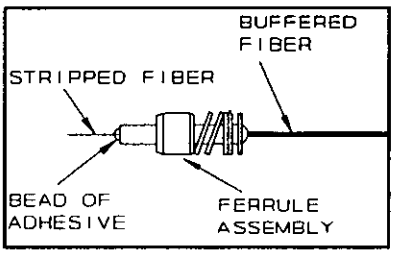


FIGURE 5C1-2. Inserting fiber into ferrule.



Source: https://assist.dla.mil -- Downloaded: 2016-12-31T21:23Z
Check the source to verify that this is the current version before use.

3.2.3 Curing adhesive.

Step 1 - Remove UV blocking shield, if used.

Step 2 - Place prepared ferrules (one at a time) on curing tool base (see figure 5C1-3). Position UV curing lamp over ferrules. (NOTE: If possible, tape OFCC's to any available surface during curing period to avoid accidentally pulling ferrules from curing lamp.)

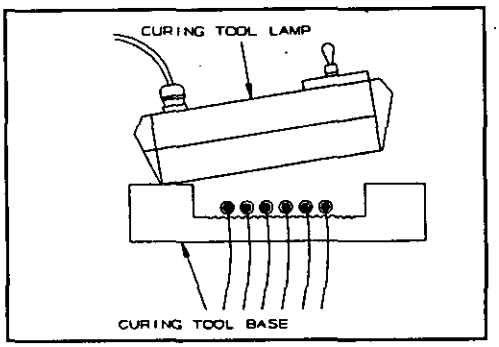


FIGURE 5C1-3. Positioning curing lamp.

Step 3 - **WARNING:** Wear UV safety glasses when using curing lamp to avoid possible eye injury.

Turn on curing lamp and cure ferrules for a minimum of 2 minutes.

Step 4 - Turn off curing lamp and lift off curing tool base. Remove cured ferrules from curing tool base.

Step 5 - **WARNING:** Wear safety glasses when scoring fiber to avoid possible eye injury.

Score fiber close to terminus tip and at epoxy bead using one short light stroke with cleaving tool (see figure 5C1-4). (NOTE: Do not break fiber with cleaving tool.) Pull off fiber with a gentle straight pull.

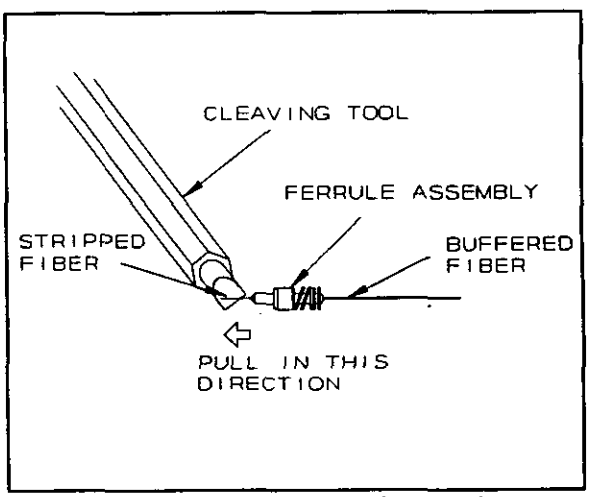


FIGURE 5C1-4. Scoring fiber.



Source: https://assist.dla.mil -- Downloaded: 2016-12-31T21:23Z
Check the source to verify that this is the current version before use.

Step 6 - Remove any adhesive on the cylindrical surface of the ferrule using an utility knife by moving the knife from back to front of ferrule using light force and a shallow working angle (see figure 5C1-5). (NOTE: Be careful not to scratch ferrule end.)

Step 7 - Proceed to 3.2.4 below.

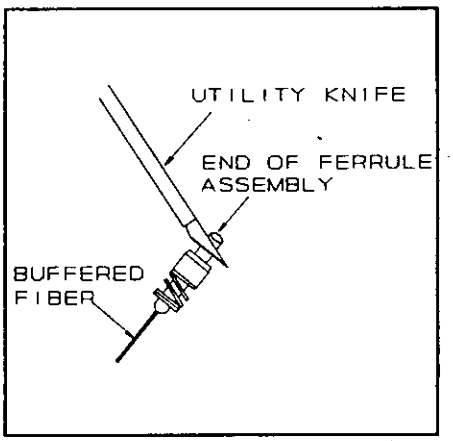


FIGURE 5C1-5. Removing excess adhesive.

3.2.4 Polishing fiber ends. Hand polishing is the preferred method of polishing ferrules. Procedures for hand polishing are contained herein. Machine polishing may be used as an alternate method, provided the following requirements are satisfied:

a. Manufacturer's instructions will be rigidly adhered to, except that the polishing papers or disks shall be 8 μm and 1 μm, as used in hand polishing.

b. The machine polished ferrules shall undergo the same quality check used for hand polished ferrules and described herein.

Step 1 - Clean glass polishing plate, backs of polishing papers, surface of polishing tool and ferrules using wipe dampened with alcohol. Blow all surfaces dry with air.

Step 2 - Insert ferrule into polishing tool.



Source: https://assist.dla.mil -- Downloaded: 2016-12-31T21:23Z
Check the source to verify that this is the current version before use.

Step 3 - Place sheet of 8 μm polishing paper onto glass plate and start polishing ferrule with very light pressure (the weight of the tool) using figure-8 motions (see figure 5C1-6). Polish until adhesive bead is gone and ferrule surface is unmarked. Since polishing time varies with size of adhesive bead, inspect ferrule tip frequently. Whenever polishing tool is lifted, remove grit from tool and ferrule with air.

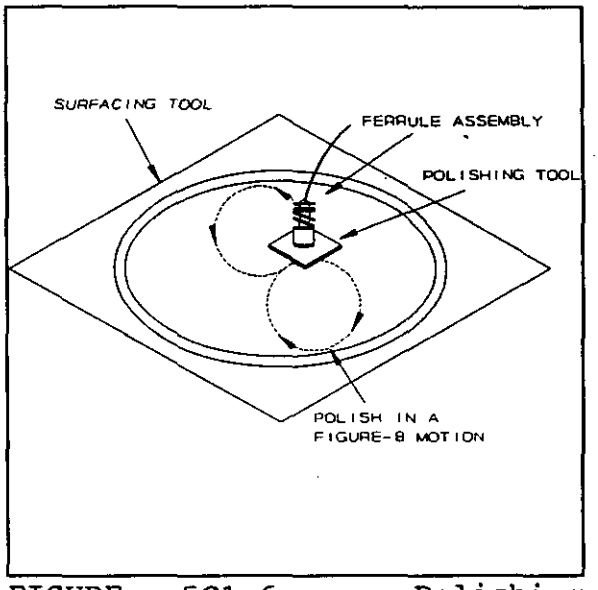


FIGURE 5C1-6. Polishing ferrule.

Step 4 - When polishing is complete, remove ferrule from polishing tool, clean both with wipe dampened with alcohol and blow dry with air. Replace ferrule in polishing tool.

Step 5 - Replace 8 μm polishing paper with 1 μm polishing paper. Wet one quarter of paper and start polishing with very light pressure (the weight of the tool) using figure-8 motions, rotating the ferrule 90 degrees periodically during procedure. (NOTE: Start and finish should be on the same area of paper so as to gradually wear away and reduce grit for a finer polish.) Inspect ferrule tip frequently using eye loupe and cease polishing when adhesive is all gone and there is no evidence of scratches or other defects.

NOTE: Do not over polish; 10 to 30 figure-8's should be adequate.

Step 6 - Remove ferrule from tool and clean both with wipe dampened with alcohol and blow dry with air. Repeat above steps for all ferrules.

Step 7 - Proceed to 3.2.5 below.



Source: https://assist.dla.mil -- Downloaded: 2016-12-31T21:23Z
Check the source to verify that this is the current version before use.

3.2.5 Quality check.

Step 1 - Examine ferrule with eye loupe to ensure optical surface is flat and free of scratches, pits, chips, and fractures (see figure 5C1-7). If defects are present, repeat polishing procedure or reterminate. (NOTE: A high intensity back light may be used to further illuminate fiber.)

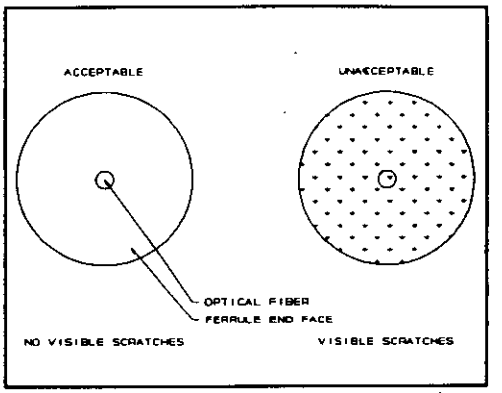


FIGURE 5C1-7. Quality check.



Source: https://assist.dla.mil -- Downloaded: 2016-12-31T21:23Z
Check the source to verify that this is the current version before use.

# STANDARDIZATION DOCUMENT IMPROVEMENT PROPOSAL

## INSTRUCTIONS

1. The preparing activity must complete blocks 1, 2, 3, and 8. In block 1, both the document number and revision letter should be given.
2. The submitter of this form must complete blocks 4, 5, 6, and 7.
3. The preparing activity must provide a reply within 30 days from receipt of the form.

NOTE: This form may not be used to request copies of documents, nor to request waivers, or clarification of requirements on current contracts. Comments submitted on this form do not constitute or imply authorization to waive any portion of the referenced document(s) or to amend contractual requirements.

**I RECOMMEND A CHANGE:**

| 1. DOCUMENT NUMBER | 2. DOCUMENT DATE (YYMMDD) |
|---|---|
| MIL-STD-2042-5(SH) | 930707 |

**3. DOCUMENT TITLE**
FIBER OPTIC TOPOLOGY INSTALLATION STANDARD METHOD FOR NAVAL SHIPS

**4. NATURE OF CHANGE** *(Identify paragraph number and include proposed rewrite, if possible. Attach extra sheets as needed.)*

**5. REASON FOR RECOMMENDATION**

**6. SUBMITTER**

| a. NAME (Last, First, Middle Initial) | b. ORGANIZATION | |
|---|---|---|
| c. ADDRESS (Include Zip Code) | d. TELEPHONE (Include Area Code)<br>(1) Commercial<br>(2) AUTOVON (If applicable) | 7. DATE SUBMITTED (YYMMDD) |

**8. PREPARING ACTIVITY**

| a. NAME | b. TELEPHONE (Include Area Code) (1) Commercial | (2) AUTOVON |
|---|---|---|
| TECHNICAL POINT OF CONTACT:<br>Mr. Charles Courchaine | 703-602-3221 | 332-3221 |
| c. ADDRESS (Include Zip Code)<br>Commander, SEA 03Q42<br>Naval Sea Systems Command<br>2531 Jefferson Davis Hwy<br>Arlington, VA 22242-5160 | IF YOU DO NOT RECEIVE A REPLY WITHIN 45 DAYS, CONTACT:<br>Defense Quality and Standardization Office<br>5203 Leesburg Pike, Suite 1403, Falls Church, VA 22041-3466<br>Telephone (703) 756-2340 AUTOVON 289-2340 | |



Source: https://assist.dla.mil -- Downloaded: 2026-12-31T21:23Z
Check the source to verify that this is the current version before use.