MIL-B-2427G (AR)
30 August 1984
SUPERSEDING
MIL-B-2427F (PA)
30 September 1974

MILITARY SPECIFICATION

BOX, AMMUNITION PACKING: WOOD, NAILED

This specification is approved for use by the US Army Armament, Munitions and Chemical Command, and is available for use by all Departments and Agencies of the Department of Defense.

1. SCOPE

1.1 Scope. This specification covers three types and nine classes of basic box designs having two exterior vertical cleats on each end as shown in figure 1. Also, it covers the closing and strapping requirements for filled boxes (see Appendix - Part 1), and prescribes the criteria to be utilized to determine the serviceability of Government furnished boxes (see Appendix - Part 2). The box may or may not have hinge and hasp hardware, rope handles and double end construction.

1.2 Classification. The basic box design and modifications thereof shall be of the following types, classes and grades:

Type I		Top opening without rope handles
Class 1	-	Without hardware, with two cover cleats, See figure 2
Class 2	-	With hardware, with two cover cleats. See figure 3
Class 3	-	Without hardware, with two cover cleats, light construction. See figure 2.
Type II		Top opening with two rope handles.
Class 1	-	Without hardware, with two cover cleats. See figure 4.
Class 2	-	With hardware, with two cover cleats See figure 5
Class 3	-	With hardware, with three cover cleats. See figure 6
Class 4	-	With hardware, with rope handles on cover cleats, with double end construction. See figure 7.

FSC 8140

Beneficial comments (recommendations, additions, deletions) and any pertinent data which may be of use in improving this document should be addressed to Commander, US Army Armament Research and Development Center Attn DRSMC-QA, Dover, New Jersey 07801 by using the self-addressed Standardization Document Improvement Proposal (DD Form 1426) appearing at the end of this document or by letter

Source: https://assist.dla.mil -- Downloaded: 2016-12-11T06:10Z
Check the source to verify that this is the current version before use.

Class 5	-	With hardware, with double end construction. See figure 8.
Type III		End opening with two rope handles.
Class 1	-	With carriage bolt hardware, with two cover cleats and double end construction See figure 9
Grade A	-	Preservative treated boxes for the unrestricted shipment, storage and handling of ammunition or explosive ammunition components.
Grade C	-	Boxes without preservative treatment, primarily for interplant shipment and for storage and handling under controlled conditions of ammunition or explosive ammunition components.

1.3 Definitions. Knocked Down (KD) Boxes - Boxes in shook form with cleated panels assembled and rope handles in place. Hardware and nails required to assemble the boxes shall be included unless otherwise specified in the contract or order (see 6.1.1 and Section 5).

2. APPLICABLE DOCUMENTS

2.1 Government documents

2.1.1 Specifications and Standards. Unless otherwise specified (see 6.1), the following specifications and standards of the issue listed in that issue of the Department of Defense Index of Specifications and Standards (DODISS) specified in the solicitation, form a part of this specification to the extent specified herein.

SPECIFICATION

FEDERAL

FF-N-105	-	Nails, Wire; Brads, Staples: Wire, Cut and Wrought
FF-S-107	-	Screws, Tapping and Drive
MMM-A-125	-	Adhesive, Casein-Type: Water and Mold Resistant
NN-P-530	-	Plywood, Flat Panel
QQ-S-781	-	Strapping, Steel and Seals
T-R-650	-	Rope, Yarn and Twine, Bast Fiber

MILITARY

MIL-A-2550	-	Ammunition, General Specification for

Source: https://assist.dla.mil -- Downloaded: 2016-12-11T06:10Z
Check the source to verify that this is the current version before use.

STANDARDS

MILITARY

MIL-STD-105	-	Sampling Procedures and Tables for Inspection by Attributes
MIL-STD-109	-	Quality Assurance Terms and Definitions
MIL-STD-129	-	Marking for Shipment and Storage
MIL-STD-1235	-	Single and Multi-level Continuous Sampling Procedures and Tables for Inspection by Attributes
MS 35492	-	Screw, Wood, Flat Head, Cross Recessed
MS 35494	-	Screw, Wood, Flat Head

2.1.2 Other Government documents, drawings and publications. The following other Government documents, drawings and publications form a part of this specification to the extent specified herein.

DRAWINGS

US ARMY ARMAMENT RESEARCH AND DEVELOPMENT CENTER

8796520	-	Swivel Assembly
8796523	-	Hasp
8796524	-	Hinge
8797512	-	Swivel Assembly

(Copies of drawings, specifications, handbooks, standards, and publications required by manufacturers in connection with specific acquisition functions should be obtained from the contracting activity or as directed by the contracting officer).

2.2 Other publications. The following documents form a part of this specification to the extent specified herein. Unless otherwise indicated, the issue in effect on date of invitation for bids or request for proposal shall apply.

AMERICAN SOCIETY FOR TESTING AND MATERIALS

ASTM-D2016	-	Moisture Content of Wood, Standard Test Methods for
ASTM-D4268	-	Testing Fiber Ropes, Standard Methods for

(Application for copies should be addressed to the American Society for Testing and Materials, 1916 Race Street, Philadelphia, PA 19103)

Source: https://assist.dla.mil -- Downloaded: 2016-12-11T06:10Z
Check the source to verify that this is the current version before use.

2.3 Order of precedence. In the event of a conflict between the text of this specification and the references cited herein, the text of this specification shall take precedence.

3. REQUIREMENTS

3.1 Material.

3.1.1 Wood. The species of wood acceptable under this specification are classified in groups as follows. When a group is specified, any wood in that group may be used unless otherwise specified by the procuring activity. If a group is not specified, woods from any group may be used.

GROUP I

Alder, red	Cucumbertree
Aspen (Poplar)	Cypress
Basswood	Fir (Abies, Sp.)
Buckeye	Pine (except southern yellow)
Butternut	
Cedar[a]	Spruce
Chestnut	Willow[a]
Cottonwood	Yellow Poplar

GROUP II

Douglas Fir	Larch (Tamarack)
Hemlock	Pine, Southern Yellow

GROUP III

Ash (Cabinet Texture)[b]	Magnolia
Cherry	Maple, soft
Elm, soft	Sycamore
Gum, red or black	Tupelo, water

GROUP IV

Ash (Tough texture)[c]	Hickory
Beech	Locust
Birch	Maple, hard
Elm, hard	Oak
Hackberry	Pecan

Note: a. For Group 1 woods, when lumber 5/8 inch in thickness or less is specified on the applicable drawing or specification, Cedar and Willow shall not be used.
b. Average weight 2800 pounds per 1000 board feet.
c. Average weight over 3500 pounds per 1000 board feet.

Source: https://assist.dla.mil -- Downloaded: 2016-12-11T06:10Z
Check the source to verify that this is the current version before use.

3.1.2 Moisture content. The moisture content of the lumber after seasoning, and prior to the application of preservative treatment, shall not be greater than 19 percent nor less than 12 percent of its oven dry weight as evidenced by the test specified in 4.5.2.

3.1.3 Finish. Lumber shall be cut to length and surfaced on two sides. Edges shall be straight and square with the surface of the lumber. Unless otherwise specified by the procuring activity lumber may be surfaced on one side, and resawn on the other side; the resawn surface shall face to the inside of the box. Resawn lumber must meet specified thickness requirements.

3.2 Defects standards. The following defects standards shall apply to lumber as cut to size and assembled in the box.

3.2.1 Season check. Slight season checks occuring in the center portion of a board in a finished box shall be permitted provided they do not extend through the board in which they occur. Season checks which extend through the board shall be considered as splits (3.2.2) except that when adjacent to a knot they will be considered a component part of incased knot defect (3.2.3.2). Season checks occurring at the end of the board shall be cause for rejection unless repaired by corrugated fasteners and by additional nailing in accordance with the procedure outlined for splits.

3.2.2 Splits. (see 6.3). Splits in sides, top and bottom may be repaired as stated herein. Splits diverging to the edge of a board, or which if extended would diverge to the edge of a board are not permitted. Splits extending the full length of a board in which the remaining pieces are at least 1 1/2 inches wide on either side of the split are acceptable provided they are repaired with corrugated fasteners. Splits in which the remaining pieces are at least 2 1/2 inches wide shall be repaired by additional nailing in accordance with the requirements for individual boards. Splits less than the full length of the board but over three inches in length which would not diverge to an edge shall be repaired with corrugated fasteners. Splits in ends of boards as discussed above and caused by nailing shall be repaired as described. Splits adjacent to the edge of a board caused by nailing will be permitted if they do not exceed one inch in length and do not terminate in the edge of the board. Corrugated fasteners used for repair shall be one inch long and as wide as required to penetrate to within approximately 1/8 inch of the full board thickness. They shall be centered over the split. They

Source: https://assist.dla.mil -- Downloaded: 2016-12-11T06:10Z
Check the source to verify that this is the current version before use.

shall be located within 3 inches of the ends of the split and between 3 and 6 inches apart along the split. Corrugated fasteners shall be driven flush with the outer surface and shall not project through the inner surface or any recess cut into the inner surface

3.2.3 Knots and holes.

3.2.3.1 Sound, tight knots shall be permitted provided the dimension measured across the board is not greater than 1/3 the width of the boards in Grade A boxes nor more than 2/3 the width of the board in Grade C boxes. Knots which occur in nailed edges or underneath hardware, shall be cause for rejection of the boxes if they crack or break out.

3.2.3.2 Knot holes, loose knots or worm holes larger than 3/4 inch across the largest dimension shall be cause for rejection unless repaired in accordance with 3.2.3.4. Small holes less than 1/16 inch in diameter shall be permitted in any board provided no concentration of such holes exceeds five in any square inch of surface in Grade A boxes. Individual knot holes, loose knots or worm holes, ranging in size from 1/16 inch to 3/4 inch across the largest dimension, shall be permitted provided they are spaced not less than 12 inches apart in Grade A boxes or three inches in Grade C boxes.

3.2.3.3 A knot extending through the thickness of the board which is encased (separated for more than 1/2 of the circumference from the surrounding wood by hard pitch or checks) shall be considered a loose knot. If a portion of a knot has been removed from an edge of a board in manufacture, the basis for judging the knot for encasement shall be 1/2 the remaining circumference. Season checks extending through the thickness of the wood and so placed as to cause breaking out of a portion of a knot which would result in a hole larger than 3/4 inch across the largest dimension, shall be cause for rejection.

3.2.3.4 Repair of holes and knots. Holes and loose knots may be repaired with solid wooden plugs or plywood disks, except that the application of a nail, screw, or corrugated fastener in a plug or disk utilized in a finished box shall be cause for rejection. Plywood utilized in disks shall comply with NN-P-530. The plugs shall be a snug fit and disks shall be from a snug fit to 1/64 inch maximum clearance. Plugs shall be of the same thickness as the board in which inserted. Counterbores for disks shall be drilled only to a depth necessary to accommodate the thickness of

Source: https://assist.dla.mil -- Downloaded: 2016-12-11T06:10Z
Check the source to verify that this is the current version before use.

the disk. Plugs and disks shall be glued on all butting surfaces with glue conforming with MMM-A-125. Holes plugged with a solid plug of the same thickness as the board shall be cause for rejection if the plug diameter measures more than 1 1/2 inches, or if the diameter is greater than half the width of the board. Plywood disks which partially extend through the thickness of the board shall be cause for rejection if any of the following conditions given exist:

a. The knot covered, measures more than two inches across its greater diameter.

b. The diameter of the disks exceeds 2 1/2 inches.

c. The disk has a bearing on solid wood of less than 1/8 inch at any point on its circumference.

d. The disk thickness is less than 1/4 inch or more than one half the thickness of the board.

Holes or loose knots may be considered plugged if covered by a cleat, providing that any portion not covered measures no more than 5/8 inch in any direction. If a nail in the cleat enters such a hole or knot, the box shall be rejected unless corrected by additional nailing. As an alternate material to the plywood for the manufacture of disks, lumber of the same species as that repaired is acceptable provided that the direction of grain in the disks is not parallel to the axis of the disk.

3.2.3.5 Other defects. (see 6.4). At least one surface on each board, i.e., the surface to be placed on the outside of the box, shall be sufficiently smooth and free of stain to permit legible marking. Wane shall not exceed 1/2 inch in width on the surface on which it appears for one sixth the length or one half the thickness. Evidence of decay in which the disintegration is readily recognizable shall be cause for rejection.

3.2.4 Box cleats.

3.2.4.1 Grade A box cleats. The requirements of paragraph 3.2.3 shall apply on all cleats except end cleats. The divergence of the grain in each end cleat shall not exceed one inch in 10 inches of length. In the end cleats when handles are used, the type number and size of knots in the area defined by the width of the end cleat and the lengthwise limits of the groove will be as follows:

a. A maximum (max) of 10, less ingrown knots, not larger than 1/16 inch wide by 1/8 inch long spaced 1/2 inch minimum (min), center to center.

Source: https://assist.dla.mil -- Downloaded: 2016-12-11T06:10Z
Check the source to verify that this is the current version before use.

b. A single well ingrown knot not more than 1/4 inch across the widest dimensions.

When knots as specified in "a" are present, a knot as specified in "b" shall not be permitted. In other areas of such cleats or when handles are not used, solid, well ingrown knots, not more than one fourth the width of the boards across the widest dimension shall be permitted provided that if there is more than one such knot, they shall not be closer together than five inches. Knots of any type whether loose or solid, in the ends of cleats, shall be permitted, provided they are entirely contained within an area extending not more than 1 inch from the end of the cleat.

3.2.4.1.1 The exposed edge at the bottom end of vertical end cleats may be beveled 1/4 inch at a 45 degree angle at the option of the procuring activity.

3.2.4.2 Grade C box cleats. All requirements of Grade A box cleats (3.2.4.1) apply to Grade C box cleats except that in areas not grooved for a handle, solid, well ingrown knots shall be permitted with diameters not exceeding half the width of the cleat.

3.3 Rope handles. Rope handles shall be made from rope as specified in 3.3.1, 3.3.2, or 3.3.3. The rope shall be attached as shown in figure 1. The length of the rope used shall be determined in accordance with figure 1A. Rope handles shall show no evidence of fraying or excessive strain and shall be capable of supporting a static load equal to twice the gross weight of the box as prepared for actual shipment. Neither the rope nor the handle assembly including cleats, shall fail when tested in accordance with 4.5.1.

3.3.1 Jute rope handles. Jute rope shall comply with Type I, Class 2, of T-R-650. Unless otherwise specified, 1/2 inch diameter rope shall be used with 11/16 min thick cleats (fig 4, 5, 6) and 5/8 inch diameter rope shall be used with 1 inch min thick cleats (see fig. 7, 8, 9).

3.3.2 Polyethylene rope handles. Polyethylene rope for all handle applications shall meet the following requirements:

Rope size	7/16 inch diameter
Color	Black
Filament size	600 Denier
Yarn	3-Ply, balance ply yarn
Rope	.042 lbs/foot, maximum (4.4.3.3)
Rope lay	1.31 inches plus/minus 5%
Breaking strength	3000 lbs minimum average (4.4.3.4)

Source: https://assist.dla.mil -- Downloaded: 2016-12-11T06:10Z
Check the source to verify that this is the current version before use.

3.3.3 Polypropylene rope handles. Polypropylene rope for all handle applications shall meet the following requirements:

Rope size	7/16 inch diameter
Color	Black
Yarn	Single Ply (3 yarns/strand)
Rope weight	.033 lbs/foot max. (4.4.3.3)
Rope lay	1.7 inches plus/minus 5%
Breaking strength	2500 lbs min. average (4.4.3.4)

3.4 Metal fittings. Metal fittings shall be manufactured in accordance with the following drawings:

8796520	-	Swivel Assembly
8796523	-	Hasp
8796524	-	Hinge
8797512	-	Swivel Assembly
MS 35492	-	Screw, Wood, Flat Head, Cross Recessed, Part Number (No.) MS-35492-41.
MS 35494	-	Screw, Wood, Flat Head, Part Number (No.) MS-35494-46.

All boxes for which hasp and hinge hardware is specified shall have one hasp and two hinges on boxes over 18 inches in inside length; one hasp and one hinge shall be used on boxes 18 inches or less in inside length. One swivel assembly, in accordance with either drawing specified above, shall be used with each hasp. The number of screws required shall be determined by the number of screw holes provided in each part used. Improperly driven screws may be removed and reseated provided that the screw holes are suitably plugged using any species of wood listed in 3.1.1. Alternatively, screws of the following description may be used: No. 7 x 3/4, Type A, flat countersink head, unhardened, zinc plated, in accordance with FF-S-107.

3.5 Thickness and width of lumber.

3.5.1 Thickness. Unless otherwise specified the wood thickness requirement depicted on the applicable figure in the specification shall apply. When thicknesses other than those depicted are required for any board or piece but no tolerance is given, a tolerance of plus or minus 1/32 inch shall apply. Occasional variations in thickness due to mismanufacture shall be permitted for not more than 10 percent of the surface area of the box.

Source: https://assist.dla.mil -- Downloaded: 2016-12-11T06:10Z
Check the source to verify that this is the current version before use.

3.5.2 Width The minimum width of any individual board used in the sides, top, bottom, or ends of a box shall be 2 1/2 inches.

3.5.2.1 When authorized by the procuring activity, one board may be less than 2-1/2 inches wide in any side, top, or bottom, provided that it is butt jointed and fastened to an adjacent board with corrugated fasteners. The joint shall be made in accordance with the requirements of 3.2.2 for the repair of full length splits. When nailing the jointed board, at least one nail shall pass through each end of the narrow piece of the jointed board.

3.6 Nailing.

3.6.1 Nails. Nails shall be cement coated or chemically etched of cooler, corker, sinker, or box type to comply with the requirements of FF-N-105. Uncoated nails may be used in nailing cleats when the nails pass through both the cleat and the board and are clinched. Alternatively, for Group II wood only, blunt pointed or truncated nails may be used in lieu of diamond pointed nails as specified above, provided the blunt or truncated nail is the same length as specified for the diamond pointed nail. Alternative fasteners may be used as specified in 3.6.3.5 or 3.6.3.6.

3.6.2 Size. The size of nails for boxes constructed of 11/16 inch thick sides, tops, bottoms and ends where the nail cannot be clinched shall be 7d for Group I, II and III woods and 6d for Group IV woods. Boxes constructed with 1/2 inch thick sides, tops, bottoms and top cleats shall be nailed with 6d nails. When fastening box members where clinching is required, as in fastening top cleats and end cleats the length of nail shall be determined by the sum of the minimum thicknesses to be joined plus adequate allowance for a minimum 1/8 inch clinch.

3.6.3 Spacing. The average spacing of nails holding the sides, top or bottom to the ends and cleats shall not be greater than the value shown in Table I and nails shall be located as shown in figures 1, 8, and 9. Nailing of sides to ends and end cleats shall be in accordance with figure 8 for class 5 boxes. In the event that it is necessary to exceed this spacing because of small knots or checks in the nailing end or because of the location of joints between boards, the distance between any two adjacent nails shall not be greater than 1 1/2 times the spacing given in Table I.

Source: https://assist.dla.mil -- Downloaded: 2016-12-11T06:10Z
Check the source to verify that this is the current version before use.

TABLE I

Average Spacing of Nails

(Except for nailing top and bottom to sides)

Size of Nails	Average spacing for nailing cleats to ends, sides, top or bottom or for nailing top and bottom to ends (inches)	Average spacing for nailing sides to ends and end cleats (inches)
6d or smaller	1 3/4	1 1/2
7d	2	1 3/4
8d	2 1/4	2
9d when specified on drawings (dwgs)	2 1/2	2 1/4
10d when specified on dwgs.	3	2 1/2
12d when specified on dwgs.	3 1/2	2 3/4
16d when specified on dwgs.	4	3 1/4
20d when specified on dwgs.	4 1/2	3 3/4

3.6.3.1 Each board in the sides, top, or bottom shall have at least two nails at each nailing end. Top, bottom and sides shall be secured to the end board of the end assembly by not more than one half of the total required number of nails driven into the end and the remaining one half or greater into the cleat. Nails shall be located as shown in figures 1, 8 and 9.

3.6.3.2 The nails holding the bottom to the sides shall be spaced between six and eight inches apart. When the top is not fastened with hardware, the nails holding it to the side shall be spaced the same as for the bottom. When using 1/2 inch lumber, tops and bottoms shall not be nailed to sides.

3.6.3.3 The nails for fastening cleats to ends and tops (or sides and bottom when specified) shall pass through both parts and be clinched not less than 1/8 inch. The nails in each cleat shall be driven in two rows spaced as given in Table I and located as shown on figures 1, 8 and 9. Each board of an end shall be nailed to each end cleat with not less than two nails.

Source: https://assist.dla.mil -- Downloaded: 2016-12-11T06:10Z
Check the source to verify that this is the current version before use.

3.6.3.4 Each board comprising a top or cover shall be secured to each top cleat by nailing in accordance with Table I as follows. At least two nails shall enter through the top cleat and into the outer board utilized for each lengthwise edge of the top. At least one nail shall enter through the top cleat into each board utilized for the center portion of the top.

3.6.3.5 Staples may be used as an alternative to nails for fastening cover cleats to cover boards. The number of staples used shall be equal to the number of nails required. Staples may be driven in a single row and from the board into the cleats. Staple legs shall be spread and the points clinched. Staples shall be made from 14 gauge wire.

3.6.3.6 Cleats may also be fastened with automatically driven wire having a knurled or screw type surface in lieu of the nails or staples specified above. The fasteners shall be headed and clinched. The wire used shall be 13 gauge. The number of fasteners used shall be 1 1/2 times the number of nails required. Basic nailing requirements shall be followed except that the spacing shall be decreased to provide a uniform pattern (see 6.5)

3.7 Fabrication.

3.7.1 All parts of the box shall be cut square to size and of uniform thickness. The grain in the wood shall be located in the direction providing greatest box strength; that is, lengthwise for sides, tops and bottom, crosswise for ends or as shown in Fig. 8 for double ends, lengthwise in cleats. Top and bottom edges shall be flush with the outer edges of sides and ends. Sides shall extend to cover the full thickness of ends and end cleats. End cleats shall be cut lengthwise to come within 1/8 inch of the outer surface of tops and bottoms. End cleats shall be positioned so that sides will fit flush against them. Top cleats shall be cut lengthwise to come within 1/8 inch of the top edges. Hardware shall be securely attached with screws fully seated but not over driven so that they continue to turn freely. Nails shall be driven so that neither the head nor the point will project above the surface of the wood. Occasional overdriving of nails will be permitted but no nail shall be overdriven more than 1/8 the thickness of the board. The points of clinched nails shall be driven flush or below flush and any remaining exposed portion of the nail shall be smooth. All boxes shall be clean, uniform in appearance and free of splinters.

3.7.2 The following dimensional allowances and tolerances will apply when not otherwise specifically stated:

Source: https://assist.dla.mil -- Downloaded: 2016-12-11T06:10Z
Check the source to verify that this is the current version before use.

a.	Mismatch of boards in a panel (variation of thickness in adjacent boards)	= 1/16 inch max.
b.	Variation in thickness in a set of cleats, i.e., all top cleats, all end cleats	= 1/16 inch max.
c.	Variation due to crook in board -	
	(1) Gap between adjacent boards; must butt at some point	= 1/4 inch max.
	(2) Failure to cover overlapped edge	= 1/8 inch max.
d.	Gap between boards intended to butt tightly (edges straight)	= 1/8 inch max.
e.	Overlap of edges intended to be flush, less than flush, each edge (edges straight)	= 1/8 inch max.
f.	Untoleranced dimension, one inch or less	= ± 1/16 inch
g.	Untoleranced dimension over one inch	= ± 1/8
h.	Angle	= ± 2 1/2°
i.	Rope Handle, length	= ± 1/4 inch

3.8 Box identification. Each box shall be marked on the bottom by the box manufacturer with the manufacturer's name and address, month and year of manufacture, and the drawing number, including the letter or number of the revision. The letters "PA" shall be annotated on all boxes subjected to the PQ 56 (Copper-8-quinolinolate) preservative treatment in accordance with paragraph 3.9. The letters "PB" shall be annotated on all boxes subjected to the M-GARD W550 (zinc naphthenate emulsifiable) preservative treatment in accordance with paragraph 3.9. The letters shall be not less than 1 inch in height. All other letters and figures shall be 1/4 inch min. in height.

Source: https://assist.dla.mil -- Downloaded: 2016-12-11T06:10Z
Check the source to verify that this is the current version before use.

3.9 Preservative treatment. Grade A boxes or the finished wood parts thereof shall be completely immersed for a minimum of one minute in a solution of wood preservative PQ56 reduced with water down to 1.8 percent copper-8-quinolinolate as solution (see 6.6) or an emulsion of wood preservative M-GARD W550 (zinc naphthenate) reduced with water down to 3 percent zinc as metal (see 6.7). Alternatively, Grade A boxes or the finished wood parts thereof shall be completely flooded for a minimum of one minute in PQ 56 or M-GARD W550 emulsion as to inundate all interior and exterior surfaces (when finished wood parts are dipped). Care shall be exercised to assure complete coverage of all surfaces of the board. After the dip treatment, the boxes must be air dried (or dried for an appropriate time in a kiln or oven) for a period of 24 hours minimum in a well ventilated area allowing full air circulation around all surfaces of the wood box. The boxes must be dried prior to shipment.

*The box manufacturer will be required to obtain and provide all available safety, health and environmental data, i.e., EPA Hazard Data Sheets, OSHA Safety Data Sheets, etc. Of specific interest are the acute, subchronic and chronic toxicity data. Also, the manufacturer will obtain and provide any special safety, health and environmental information (apparatus and procedures) to be used throughout the treated box duty life and disposal.

3.9.1 Presence of PQ 56 (copper-8-quinolinolate) preservative. When treated with PQ56, the box shall show evidence of discoloration when tested as specified in 4.5.5.

3.9.2 Presence of M-GARD W550 (zinc naphthenate emulsifiable) preservative. When treated with M-GARD W550, the box shall show evidence of discoloration when treated as specified in 4.5.6.

3.10 First article inspection. This specification makes provisions for first article inspection. Requirements for the submission of first article samples by the contractor shall be as specified in the contract.

4. QUALITY ASSURANCE PROVISIONS

4.1 Responsibility for inspection. Unless otherwise specified in the contract or purchase order, the contractor is responsible for the performance of all inspection requirements as specified herein. Except as otherwise specified in the contract or purchase order, the contractor may use his own or any other facilities suitable for the performance of the inspection requirements specified herein, unless disapproved by the Government. The Government reserves the right to perform any of the inspections set forth in the specification where such inspections are deemed necessary to assure supplies and services conform to prescribed requirements. Reference shall be made to MIL-STD-109 in order to define terms used herein. The provisions of MIL-A-2550 shall apply.

Source: https://assist.dla.mil -- Downloaded: 2016-12-11T06:10Z
Check the source to verify that this is the current version before use.

4.1.1 Certification. The contractor shall certify that the preservative treatment used is in full conformance to the requirements of 3.9.

4.2 Classification of inspections. The inspection requirements specified herein are classified as follows:

a. First article inspection (see 4.3)

b. Quality conformance inspection (see 4.4)

4.3 First article inspection.

4.3.1 Submission. The contractor shall submit a first article sample as designated by the contracting officer for evaluation in accordance with the provisions of 4.3.2. The first article sample shall consist of three consecutively produced boxes of one grade, type and style which have been produced by the contractor using the same production processes, procedures and equipment as will be used in fulfilling the contract. When polyethylene or polypropylene rope is used, a continuous length of rope sufficient to perform the tests specified herein shall also be furnished. All materials shall be obtained from the same sources of supply as will be used in regular production.

4.3.2 Inspections to be performed. Samples may be subjected by the Government to any or all of the examinations and tests specified in this specification and to any or all requirements of the applicable drawings.

4.3.3 Rejection. If any box assembly or polyethylene or polypropylene rope sample, if pertinent, fail to comply with any of the applicable requirements, the first article sample shall be rejected. The Government reserves the right to terminate its inspection upon any failure of the sample to comply with any of the stated requirements.

4.4 Quality conformance inspection

4.4.1 Inspection lot formation. The term "inspection lot" is defined as a homogeneous collection of units of product from which a representative sample is drawn or which is inspected 100 percent to determine conformance with applicable requirements. Units of product selected for inspection shall represent only the inspection lot from which drawn and shall not be construed to represent any prior or subsequent quantities presented for inspection. Homogeneity shall be considered to exist provided the inspection lot has been produced by one manufacturer in one unchanged process, using the same materials and methods, in accordance with the same drawings, same drawing revisions, same specifications and same

Source: https://assist.dla.mil -- Downloaded: 2016-12-11T06:10Z
Check the source to verify that this is the current version before use.

specification revisions and complies with the provisions for submission of product as specified in MIL-STD-105. All material submitted for inspection in accordance with this specification shall comply with the homogeneity criteria specified herein, regardless of the type of inspection procedure which is being applied to determine conformance with requirements.

4.4.2 Examination. Unless otherwise specified in the Classification of Defects and Test Tables, sampling plans and procedures for major and minor defects shall be in accordance with MIL-STD-105, Inspection Level II, except that continuous sampling plans in accordance with MIL-STD-1235 may be used if approved by the procuring activity.

4.4.2.1 Assembly (see drawing indicated by contract)

Grade A	Grade C	Categories	Defects	Method of Inspection
Major:		Grade A - Group AQL = 1.5% and individual AQL = 0.65% 1/		
		Grade C - Group AQL = 2.5% and individual AQL = 1.0%		
X	X	101.	Inside height, min	Standard Measuring Equipment (SME)
X	X	102.	Inside length, min	SME
X	X	103.	Inside width, min	SME
X	X	104.	Depth to shoulder (box made for metal liner)	SME
X	X	105.	Location of separator (when required)	SME
X	X	106.	Location of knot in end cleat (batten) (3.2)	SME
X	X	107.	Grain in end cleat not straight (3.2)	SME
X	X	108.	Width of knot excessive (3.2)	SME
X	X	109.	Hole, loose knot or knot surrounded by checking	SME
X		110.	Acceptable holes, loose knots or knots surrounded by checking not sufficiently separated (3.2)	SME
X		111.	Plugged hole too large (3.2)	SME
X	X	112.	Improper use of board or piece (3.5)	SME
X	X	113.	Knot holes less than 12 inches apart	SME
X		114.	Solid knot in nailing edge or under hardware split by nail screw or milling operation (4.4.2.1.1)	Visual

1/ When double sampling plans are used and neither the group characteristics nor the individual characteristics fail on the first sample, but one of them requires the second part of the double sample, then both the group and the individual will be judged by the results of the combined samples of the double sampling plan.

Source: https://assist.dla.mil -- Downloaded: 2016-12-11T06:10Z
Check the source to verify that this is the current version before use.

X	X	115.	Nail protruding inside box	Visual
X	X	116.	Grain of wood in wrong direction (3.7)	Visual
X		117.	Nails not in pattern shown on drawing or as required by the specification	Visual
X		118.	Split terminating in edge of board (3.2)	Visual
X		119.	Markings misleading or unidentifiable	Visual
X	X	120.	Repair plug above surface or improperly secured	Visual
X	X	121.	Nail not clinched (3.6)	Visual
X	X	122.	Nail not of type or size required	SME/Visual

Grade A	Grade C	Categories	Defects	Method of Inspection
Minor: Group AQL = 6.5% and individual AQL = 1.0%				
X	X	201.	Inside height, max	SME
X	X	202.	Inside length, max	SME
X	X	203.	Inside width, max	SME
X	X	204.	Thickness of wood	SME
X	X	205.	Width of cleats	SME
X	X	206.	Worm holes (3.2)	SME
	X	207.	Hole, loose knot or knot surrounded by checking (3.2)	SME
	X	208.	Acceptable holes, loose knots knots surrounded by checking not sufficiently separated (3.2)	SME
	X	209.	Plugged hole too large (3.2)	SME
X	X	210.	Wane on surface of board excessive (4.4.2.1.2)	SME
X	X	211.	Thickness of panels, boards or sets of cleats, max (see 3.7)	SME
X	X	212.	Gap between boards, max (see 3.7)	SME
X	X	213.	Overlap of edges incorrect (see 3.7)	SME
X	X	214.	Cleat extending beyond box surface	Visual
X	X	215.	Separator improperly assembled	Visual
X	X	216.	Separator of incorrect pattern	Visual
X	X	217.	Nail protruding outside box	Visual
X	X	218.	Split in board (3.2)	Visual

Source: https://assist.dla.mil -- Downloaded: 2016-12-11T06:10Z
Check the source to verify that this is the current version before use.

X	X	219.	Screw in split or joint between boards (4.4.2.1.5)	Visual
X	X	220.	Handle missing, not properly located, or of wrong pattern	Visual
X	X	221.	Nail missing	Visual
X	X	222.	Nail bent on box surface	Visual
X	X	223.	Protective coating damaged (4.4.2.1.6)	Visual
	X	224.	Marking misleading or unidentifiable	Visual
	X	225.	Solid knot in nailing edge or under hardware split by nail, screw, or milling operation (4.4.2.1.1)	Visual
	X	226.	Nails, not in pattern shown on drawing or as required by the specification	Visual
	X	227.	Split terminating in edge of board (3.2)	Visual
X	X	228.	Stain on surface of board excessive or surface not smooth (4.4.2.1.7)	Visual
X	X	229.	Incorrect seating or operation of top (4.4.2.1.4)	Visual/Manual
X	X	230.	Loose screw or screw not properly seated (4.4.2.1.3)	Visual/Manual
X	X	231.	Decay (3.2.3.5)	Visual/Manual
X	X	232.	Screw not of type or size required	SME
X	X	233.	Length of rope handle	SME

4.4.2.1.1 Knots in nailing edges or underneath hardware require particular attention. When nails are driven through them, knots may crack or breakout, appreciably weakening the construction. This sometimes can be corrected by extra wood if nails can be placed in a proper location in solid wood. When such a successful repair is presented, the box should be considered acceptable. If the attempted repair results in further cracking, however, the box shall be classed defective. Knots in the place of attachment of hardware often crack sufficiently to loosen the hardware when screws are tightened. Milling operations necessary for the insetting of hardware also often cause such knots to crack, making proper attachment of the hardware impossible. These two conditions cannot be repaired and the box shall be classed defective.

4.4.2.1.2 Wane is bark, or lack of wood, on the edge or corner of a board. When wane is present on a board or piece and exceeds the limits as permitted by this specification, the box shall be classed defective.

Source: https://assist.dla.mil -- Downloaded: 2016-12-11T06:10Z
Check the source to verify that this is the current version before use.

4.4.2.1.3 A box shall be classed defective if more than one screw in any hasp or hinge, or either screw in the swivel, is not fully seated or is fully seated but can be continuously rotated with a screw driver using normal hand pressure. The practice of hammering screws to seat them shall not be permitted, and evidence that this has occurred is sufficient cause for classifying the box defective.

4.4.2.1.4 Incorrect seating or operation of the top, which is due to improperly attached or bent hardware or improperly assembled boards and cleats, shall be cause for rejection.

4.4.2.1.5 Hardware screws occurring in a split or in the joint between two boards will have less holding power than screws in a solid board. Screws in splits, whether caused by the screw or not, and in joints between boards shall be cause to classify the box defective. No repairs are permitted since there is no way to replace the holding power lost by reason of the defect.

4.4.2.1.6 When the base metal of the hardware has been exposed or if the action of a corrosive agent has impaired the effectiveness of the protective coating, the box shall be classified defective.

4.4.2.1.7 Stain is a discoloration, occurring on or in the lumber, of any color other than the natural color of the board on which it appears. A box shall be classified defective if it contains any boards or piece on which at least one surface is not sufficiently smooth and free of stain to permit legible marking.

4.4.2.1.8 The points of clinched nails must be flush or below the surface of the wood, or the box will be classified defective.

4.4.3 Testing.

4.4.3.1 Load test of rope handle (see 3.3), Major defect. A sample of 15 boxes shall be selected at random from each lot and tested as specified in 4.5.1. If any box fails to comply with the applicable requirement, the lot shall be rejected.

4.4.3.2 Moisture content. (see 3.1.2), Major defect. A sample of 15 boxes shall be selected at random from each lot and tested as specified in 4.5.2. If more than three boards or pieces of the total tested fail to comply with the applicable requirements, the lot shall be rejected.

Source: https://assist.dla.mil -- Downloaded: 2016-12-11T06:10Z
Check the source to verify that this is the current version before use.

4.4.3.2.1 Retest. If one or more boxes fail to comply with the requirements, the lot shall be considered eligible for retest, if requested by the contractor. A sample of 15 additional boxes shall be selected and subjected to the same test. If one or more boards or pieces of the total tested fails to comply with the requirements of 3.1.2, the lot shall be rejected.

4.4.3.3 Rope weight. (see 3.3). This test is applicable to first article inspection lots only (see 4.3.1) when polyethylene or polypropylene rope handles are to be supplied. A 12 yard sample of polyethylene or polypropylene rope shall be furnished. If the rope fails to comply with the requirement of 3.3, when subjected to the test specified in 4.5.3, the first article lot shall not be approved.

4.4.3.4 Rope breaking strength. (see 3.3). This test is applicable to first article lots only (see 4.3.1) when polyethylene or polyproplyene rope handles are to be supplied. A 75 foot sample of polyethylene or polypropylene rope shall be supplied, cut into five pieces approximately equal in length. The five pieces shall be subjected to the test of 4.5.4. If average breaking strength does not comply with the requirement of 3.3 the first article sample shall not be approved.

4.4.3.5 Presence of PQ56 (copper-8-quinolinolate) preservative. (see 3.9.1), Major defect. A sample of 15 boxes shall be selected at random for this test. Four individual boards of each box shall be subjected to the test specified in 4.5.5. If one or more boards fail to meet the applicable requirement, additional boards, from that box, shall be tested. The box will be considered acceptable when a total of four individual boards (including at least one end cleat) meet the applicable requirements. Failure of any box to comply with the requirements shall be cause for rejection of the lot.

4.4.3.6 Presence of M-GARD W550 (zinc naphthenate emulsifiable) preservative. (see 3.9.2), Major defect. A sample of 15 boxes shall be selected at random for this test. Four individual boards of each box shall be subjected to the test specified in 4.5.6. If one or more boards fail to meet the applicable requirement, additional boards, from that box, shall be tested. The box will be considered acceptable when the total of four individual boards (including at least one end cleat) meet the applicable requirements. Failure of any box to comply with the requirements shall be cause for rejection of the lot.

4.4.4 Inspection equipment. The government reserves the right to inspect the contractor's equipment and determine that he has available and utilizes correctly, measuring and test equipment of the required accuracy and precision and that the instruments are

Source: https://assist.dla.mil -- Downloaded: 2016-12-11T06:10Z
Check the source to verify that this is the current version before use.

of the proper type and range to make measurements of the required accuracy. Commercial inspection equipment shall be employed where applicable for all tests and examinations specified in 4.4.2 and 4.5. The contractor is responsible for assuring that proper calibration procedures are followed. Government approval of all inspection equipment is required prior to its use for acceptance purposes (see 6.8).

4.5 Methods of inspection. (see 6.9)

4.5.1 Load test of rope handles. The ammunition box shall be packed with any suitable material until its gross weight is twice as great as its gross weight when packed with the ammunition for which it is intended. The ammunition box shall be suspended freely for one minute minimum from each rope handle in turn.

4.5.2 Moisture content. The ammunition box shall be tested in accordance with ASTM-D2016 except that three readings (e.g., side and end cleat) shall be taken on each box selected.

4.5.3 Rope weight. To measure length of polyethylene or polypropylene rope for the purpose of determining rope weight per foot, the sample of rope submitted shall be stretched with a load equal to 200 pounds multiplied by the diameter in inches squared. While the rope is under load, a 30 foot length shall be marked off, cut out, and weighed by any method of acceptable accuracy, using the length measurement determined under load. Weight in pounds per foot shall be computed.

4.5.4 Rope breaking strength. The breaking strength of the five samples of polyethylene or polypropylene rope shall be determined in accordance with ASTM-D4268. The average breaking strength shall be computed.

4.5.5 Presence of PQ56 (copper-8-quinolinolate) preservative.

4.5.5.1 Primary method.

4.5.5.1.1 Materials and equipment. The materials and equipment required are as follows:

a. PQ Check (indicator): The formulation contains 10 parts by weight, of sodium diethyldithiocarbamate trihydrate (see 6.10) and 90 parts by weight of distilled water.

b. Dropper: An ordinary glass tube eye dropper may be used.

4.5.5.1.2 Test procedure. Two drops of PQ Check (indicator) shall be applied to the wood surface. An immediate dark brown coloration and the spreading of the drops shall indicate PQ56 treatment.

Source: https://assist.dla.mil -- Downloaded: 2016-12-11T06:10Z
Check the source to verify that this is the current version before use.

4.5.5.2 Alternate method.

4.5.5.2.1 Materials and equipment. The material and equipment required are as follows:

a. Reagent. Dissolve 0.5 grams chrome azurol "S" concentrate (see 6.11) and 5.0 grams sodium acetate in 80 ml of distilled water and then dilute further to 500 ml total with distilled water.

b. Sprayer. A common manual (fly) sprayer type applicator shall be used.

4.5.5.2.2 Test procedure. Spray solution over surface of dried wood. A deep blue color reveals the presence of copper (from the copper-8-quinolinolate).

4.5.6 Presence of M-GARD W550 (zinc naphthenate emulsifiable) preservative.

4.5.6.1 Primary method.

4.5.6.1.1 Materials and equipment. The materials and equipment required are as follows:

a. Reagent. Dissolve 0.1 grams of dithizone (diphenylthiocarbazone) (see 6.12) in 100 ml of chloroform (Note: Solutions should be made up daily).

b. Sprayer. A common manual (fly) sprayer type applicator should be used.

4.5.6.1.2 Test procedure. Spray solution evenly over dried wood. The indicator will turn pink when zinc (M-GARD W550) is present. The pink color fades with light.

4.5.6.2 Alternate method.

4.5.6.2.1 Materials and equipment. The materials and equipment required are as follows:

a. Reagents (Stock solutions)

(1) 1 gram of potassium ferricyanide dissolved in 100 ml of distilled water.

(2) 1 gram of potassium iodide dissolved in 100 ml of distilled water.

Source: https://assist.dla.mil -- Downloaded: 2016-12-11T06:10Z
Check the source to verify that this is the current version before use.

(3) Starch indicator solution. Make a paste of 1 gram of soluble starch in about 5 ml of distilled water, add 100 ml of distilled water and boil for 1 minute with constant stirring. Cool. Note: This solution is subject to biodegradation and therefore should not be used longer than 3 days before a new batch is prepared.

b. Sprayer: A DeVilbiss No. 30 atomizer or equivalent.

4.5.6.2.2 Test procedure: Mix 10 ml each of the three stock solutions and pour into the atomizer (sprayer). Spray mixture evenly over surface of dried wood. The solution will cause the treated wood to turn a deep blue instantly while the untreated part will retain its original color.

5. PACKAGING

5.1 Boxes shall be shipped completely assembled unless otherwise specified. When knocked down (KD) boxes are specified, all panels for each individual box shall be strapped or bundled together. Hardware and nails may be shipped in separate, clearly labeled containers (see 1.3).

5.2 Palletization. When palletization is required, commercial wood pallets or skid bases may be used unless otherwise specified. Overseas shipments should not exceed 54 inches in height. Domestic shipments should not exceed 60 inches in height.

5.2.1 Assembled boxes shall be stacked on the pallet with all box cleats in the same direction; the top layer of boxes should be inverted. The pallet should be strapped with a minimum of two straps placed inside and adjacent to the skids, when the box length and pallet width are equal. When more than one box is placed along the width of the pallet, two additional straps shall be placed at right angles to the first two straps around the outside stacks of boxes. Strapping shall be a minimum of 3/4 inch wide by .028 thick, Class 1, Type I or IV regular duty. Finish B is required for overseas shipments. Finish A may be used for domestic shipments. Seals shall be compatible with strapping.

5.2.2 Boxes in knocked down form shall be stacked on pallets in a manner that will form a stable load. Strapping shall be in accordance with QQ-S-781, 3/4 inch by .028 thick, Class 1, Type I or IV regular duty. Strap as required to contain all pieces.

5.3 Marking. Box identification marking shall be in accordance with 3.8 of this specification. No other marking shall be placed directly on the boxes unless specifically required by the contract. Marking for shipment shall be in accordance with MIL-STD-129.

Source: https://assist.dla.mil -- Downloaded: 2016-12-11T06:10Z
Check the source to verify that this is the current version before use.

6. NOTES

6.1 Ordering data. Procurement documents shall specify the following:

6.1.1 Procurement requirements:

a. Title, number and date of this specification.

b. Type, class and grade of box.

c. Drawing number of box.

d. Gross weight of packed box.

e. Assembled or knocked down form.

f. Palletization requirements.

g. Provisions for submission of first article samples.

6.1.2 Contract data requirements. Contract data requirements for inspection equipment designs (conforming to Data Item Description DI-R-1714 tailored). See 6.8.

6.2 Packing boxes covered by this specification are intended for shipment by common carrier, of artillery ammunition, ammunition components, bombs, bomb accessories, demolition materials, special weapons components, and cartridge activated devices.

6.3 Splits shall be construed to apply to the entire side, top, bottom, or end when the piece is constructed of a single board. When the piece consists of two or more boards, as permitted in 3.2.2, splits shall be construed to apply to each board from which the piece is made.

6.4 Decay is disintegration of wood due to action of fungi. In the shop, decay can be best detected and differentiated from harmless stains and discoloration by use of the pick test. The pick test is performed with a knife or chisel by lifting some of the grain or fibers in suspicious looking areas. If the material is punky or more brash (breaks without splintering) than healthy wood of the same species, it is probably decayed. Suspicious areas are usually abnormally brown, bleached looking or mottled and indicated by the absence of luster that is present in normal wood.

Source: https://assist.dla.mil -- Downloaded: 2016-12-11T06:10Z
Check the source to verify that this is the current version before use.

6.5 One source of satisfactory type of knurled or screw type wire with driving equipment is Auto-nailer Company, 267 Mariette N.W., Atlanta, Ga.

6.6 PQ-56, for the 1.8 percent copper-8-quinolinolate solution, may be obtained from the Chapman Chemical Company, P.O. Box 9158, Memphis, Tn 38019 or equivalent facility.

6.7 M-GARD W550 (zinc hydronap), for the 3 percent zinc as metal solution, may be obtained from the Mooney Chemicals Inc., 2301 Scranton Road, Cleveland, Ohio 44113-9988 or equivalent facility.

6.8 Inspection equipment design. Design responsibility for inspection equipment is assigned to the contractor.

6.8.1 Contractor designs. Contractor designs are required for all inspection equipment and may include commercial equipment which the contractor proposes to use. (Commercial equipment is defined as unmodified equipment which is cataloged and available for purchase by the general public). Contractor designs shall include appropriate operating instructions, calibration procedures and maintenance procedures. Commercial equipment shall be fully described by catalog listings or other means which provide sufficient information to permit identification and evaluation by the Government and may include illustrations and engineering data. Designs shall be prepared for any special fixture(s) required to be used with commercial equipment. Designs shall be of the category and form (per MIL-D-1000) specified in the Contract Data Requirements Lists (DD Form 1423). The item detail specification number, paragraph number, and defect number from Section 4 shall be referenced on each contractor design together with the component or assembly drawing number, revision letter and date to which the specific design applies.

6.8.2 Submission of designs for approval. Contractor designs shall be approved by the Government prior to fabricating or procuring the equipment. Designs shall be submitted for approval in accordance with the stipulations, time frame and distribution specified in the Contract Data Requirements Lists (DD Form 1423) or in the contract. Partial submission of inspection equipment designs is permissible and encouraged. However, the completion date for design review will be based on the date of the final submission of designs and the required delivery schedule as stipulated in the contract. The specific segment of the U.S. Army Armament, Munitions and Chemical Command to which the Contractor designs shall be sent will be specified in the item detail

Source: https://assist.dla.mil -- Downloaded: 2016-12-11T06:10Z
Check the source to verify that this is the current version before use.

specification. When the contractor submits inspection equipment designs to the Government for approval he shall give the following information in his letter of transmittal:

a. The contract number.

b. The contract item (name, model number, etc.)

c. The designs remaining to be submitted and the expected date of submittal.

Submit equipment designs, as required, to Commander, U.S. Army Armament, Research and Development Center (ARDC) ATTN: AMSMC-QAR-I(D), Dover, New Jersey 07801-5001.

6.9 Prior approval of the Contracting Officer is required for use of equivalent test methods. A description of the proposed method should be submitted through the Contracting Officer to: Commander, U.S. Army Armament, Research and Development Center, ATTN: AMSMC-QAR-Q(D), Dover, New Jersey 07801-5001. This description should include but not be limited to the accuracy and precision of the method, test data demonstrating the accuracy and precision and drawings of any special equipment required.

6.10 Sodium diethyldithiocarbamate trihydrate may be obtained from J.T. Baker Chemical Co., Phillipsburg, New Jersey 08865 or equivalent facility.

6.11 Chrome azurol "S" may be obtained from Eastman Chemical Co., Rochester, New York or equivalent facility.

6.12 Dithizone (diphenylthiocarbazone) may be obtained from Matheson, Coleman and Bell Co., Cincinnati, Ohio or equivalent facility.

6.13 Changes from previous issue. Asterisks are not used in this revision to identify changes with respect to the previous issue due to the extensiveness of the changes.

Custodian:
Army - AR

Preparing Activity
Army - AR

(Project 8140-A646)

Source: https://assist.dla.mil -- Downloaded: 2016-12-11T06:10Z
Check the source to verify that this is the current version before use.

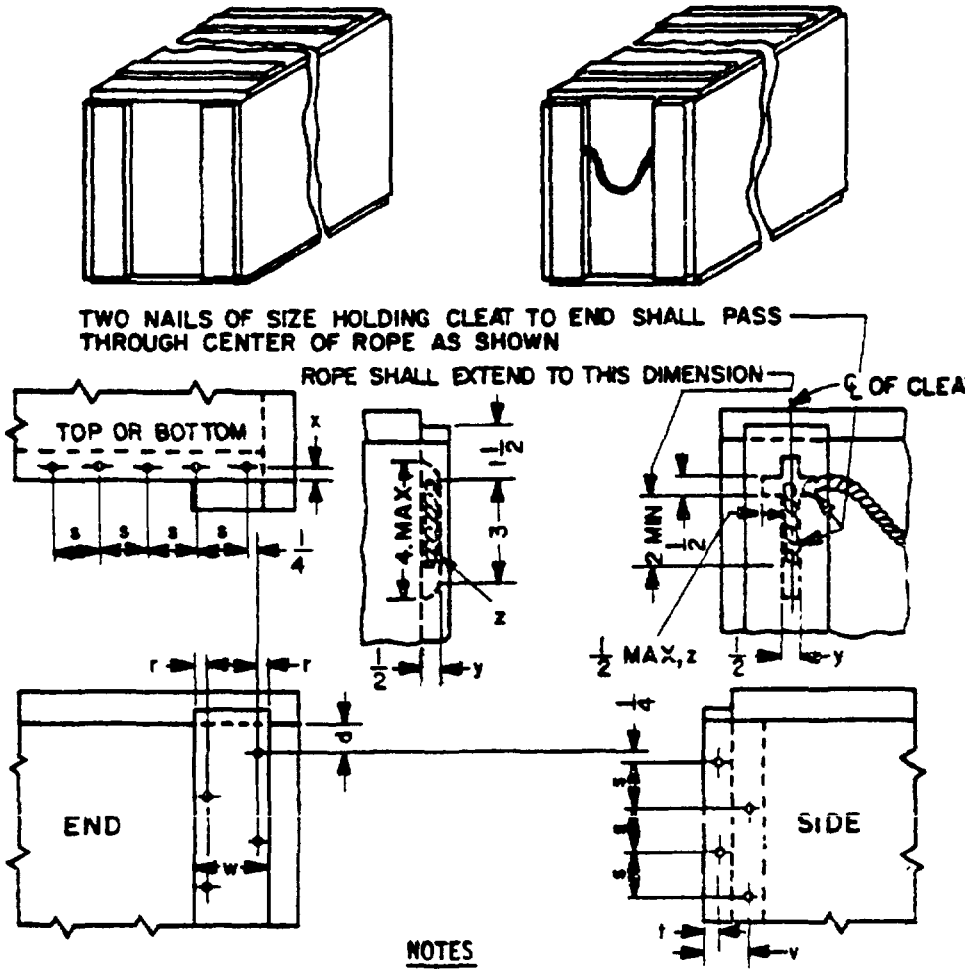

NOTES

s = NAIL SPACING, (SEE PAR. 3.6)
d.= 5/8 INCH WHEN ENDS AND CLEATES ARE 5/8 INCH THICK OR LESS, FOR THICKER LUMBER d=3/4 INCH
r.= 3/8 INCH WHEN W = 2 INCHES OR LESS, FOR GREATER WIDTH, r = 1/2 INCH.
NAILING PATTERN SHOWN FOR SECURING CLEATS TO ENDS MAY BE MODIFIED BY LOCATING TOP NAIL IN OPPOSITE ROW PROVIDED THAT NAILS ARE ALTERNATED AS SHOWN. BOTTOM NAIL MAY BE LOCATED IN INNER OR OUTER ROW AS REQUIRED.
t.= 1/2 THICKNESS OF CLEAT
v.= THICKNESS OF CLEAT PLUS 1/2 THICKNESS OF END PANEL
x.= 1/2 THICKNESS OF END PANEL
y.= ROUTING DIMENSIONS SHALL BE 5/8 INCH WHEN 5/8 INCH DIAMETER ROPE IS REQUIRED.
ROUTING DIMENSIONS SHALL BE 7/16 INCH WHEN 7/16 INCH DIAMETER ROPE IS USED.
z.= BOTTOM OF CUT MAY BE RADIUS IN LIEU OF FLAT; RADIUS SHALL NOT INTERFERE WITH ROPE SEATING OR TIGHT NAILING OF CLEAT.

FIGURE 1

WOOD BOX WITH EXTERIOR VERTICAL CLEATS

Source: https://assist.dla.mil -- Downloaded: 2016-12-11T06:10Z
Check the source to verify that this is the current version before use.

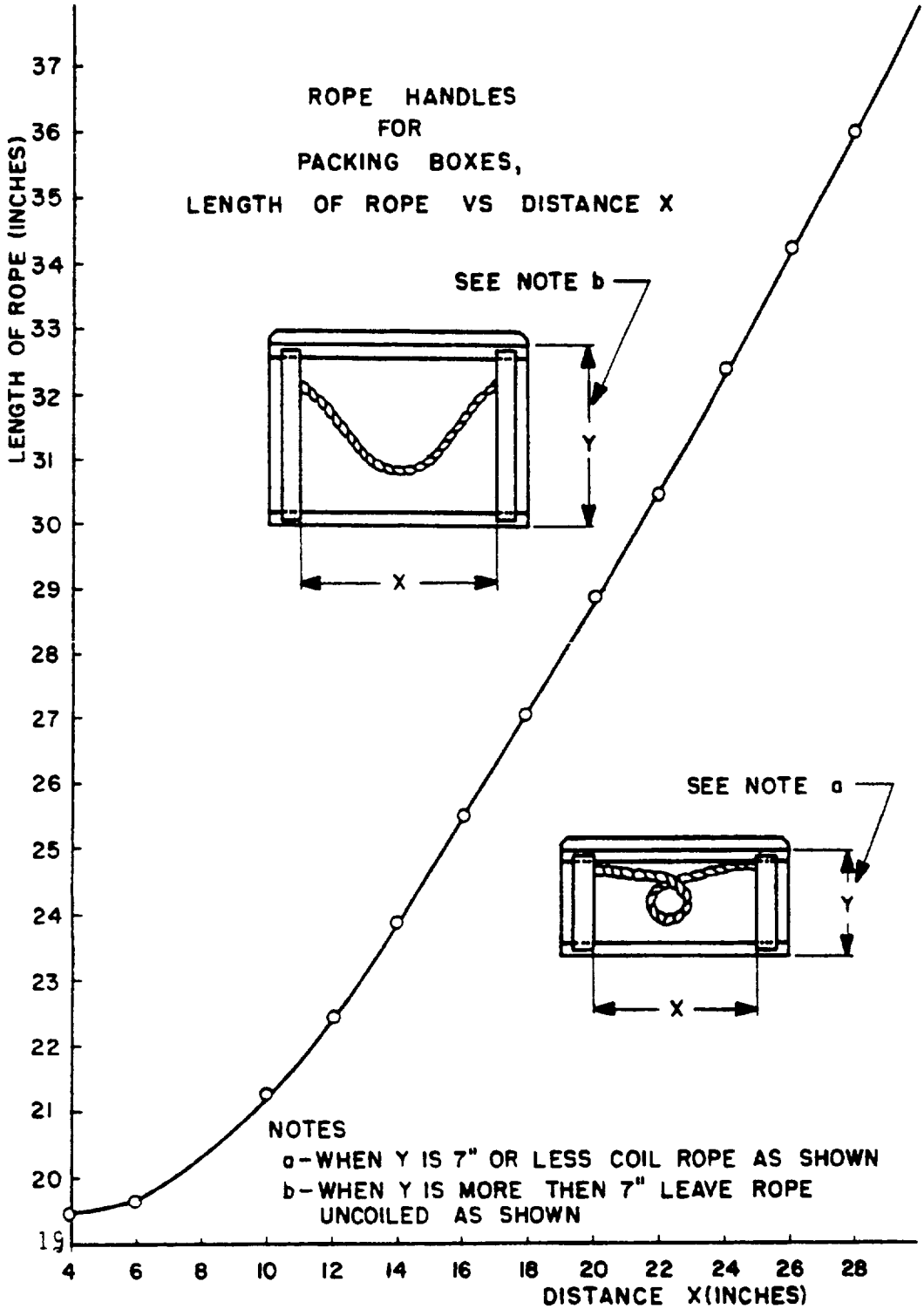

FIGURE 1A

Source: https://assist.dla.mil -- Downloaded: 2016-12-11T06:10Z
Check the source to verify that this is the current version before use.

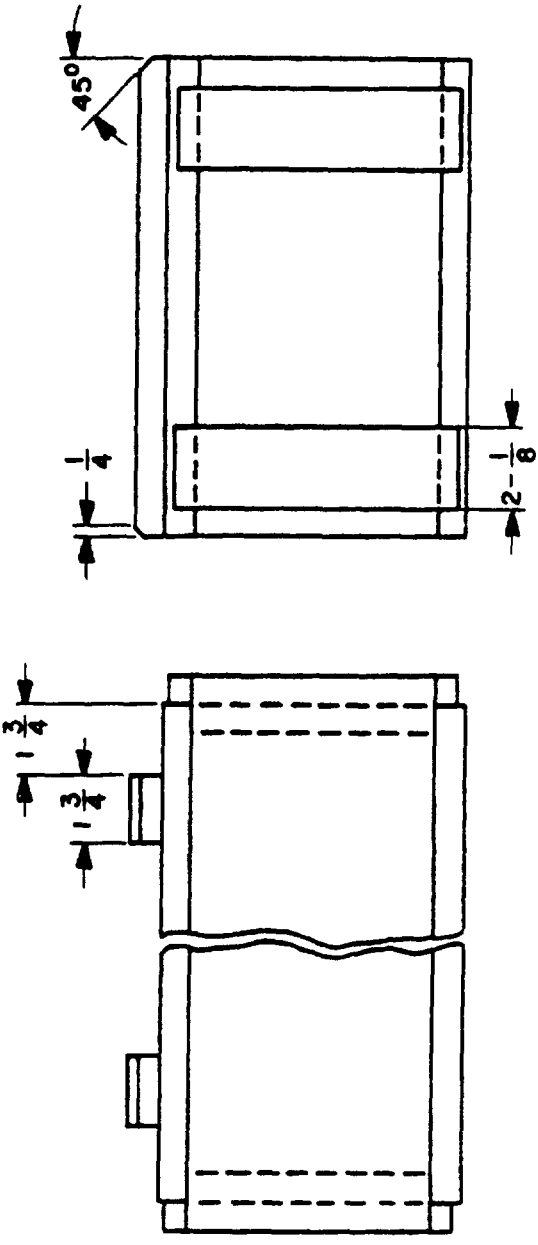

NOTES:

A = SEE FIGURE 1 FOR CONSTRUCTION OF BOX.
B = TYPE 1, CLASS 1, ALL WOOD SHALL BE 11/16 MIN. THICK.
C = TYPE 1, CLASS 3 TOP, TOP CLEATS, SIDES AND BOTTOMS 1/2 INCH THICK, ENDS AND END CLEATS 11/16 MIN. THICK.

FIGURE 2. TYPE 1, CLASS 1 BOX
TYPE 1, CLASS 3 BOX

Source: https://assist.dla.mil -- Downloaded: 2016-12-11T06:10Z
Check the source to verify that this is the current version before use.

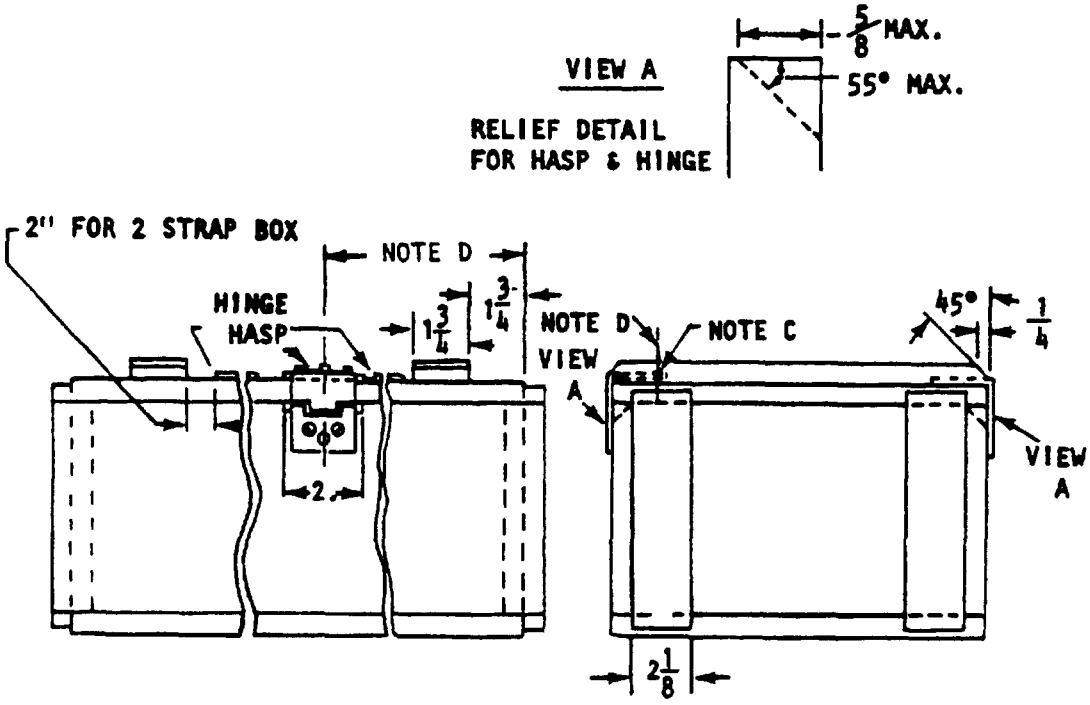

NOTES:

A - SEE PAR. 3.4 FOR HARDWARE REQUIREMENTS
B - UNLESS OTHERWISE SPECIFIED ALL WOOD SHALL BE 11/16 MIN. THICK.
C - SWIVEL ASSEMBLY LENGTH TO BE PARALLEL WITH GRAIN OF WOOD IN COVER.
D - ℄ OF SWIVEL LOCATED SO THAT HASP PASSES TIGHTLY OVER SWIVEL.
E - SEE FIGURE 1 FOR CONSTRUCTION OF BOX.
F - LOCATED AT ℄ OF BOX FOR 2 STRAP BOX. LOCATED 1 1/2 FROM ℄ OF BOX FOR 1 STRAP OR THREE STRAP BOX.
G - ONE HASP AND HINGE MAY BE USED ON BOXES 18 INCHES OR LESS INSIDE LENGTH DIMENSION (1).

FIGURE 3

TYPE I, CLASS 2 BOX

(1) WHEN ONE HINGE IS USED IT SHALL BE PLACED DIRECTLY BEHIND HASP.

Source: https://assist.dla.mil -- Downloaded: 2016-12-11T06:10Z
Check the source to verify that this is the current version before use.

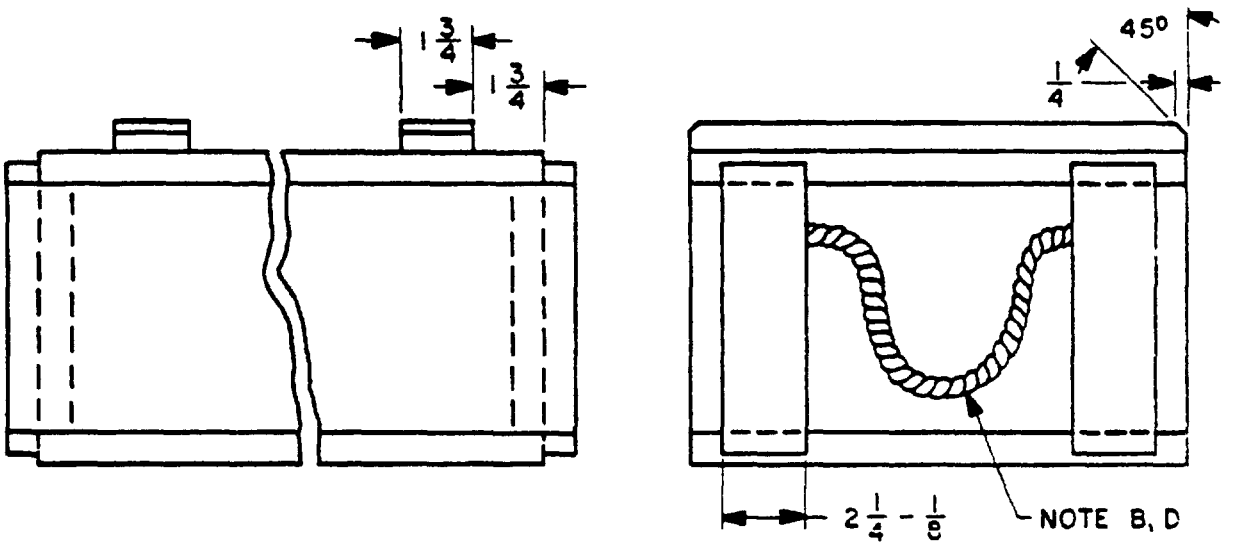

NOTES:

A - SEE FIGURE 1 FOR CONSTRUCTION OF BOX.
B - SEE FIGURE 1 FOR VIEW OF ROPE HANDLE.
C - UNLESS OTHERWISE SPECIFIED ALL WOOD SHALL BE 11/16 MIN. THICK.
D - SEE PAR. 3.3 FOR ROPE HANDLE REQUIREMENTS. SEE FIGURE 1A FOR LENGTH OF ROPE HANDLE

FIGURE 4 - TYPE 11 CLASS 1 BOX

Source: https://assist.dla.mil -- Downloaded: 2016-12-11T06:10Z
Check the source to verify that this is the current version before use.

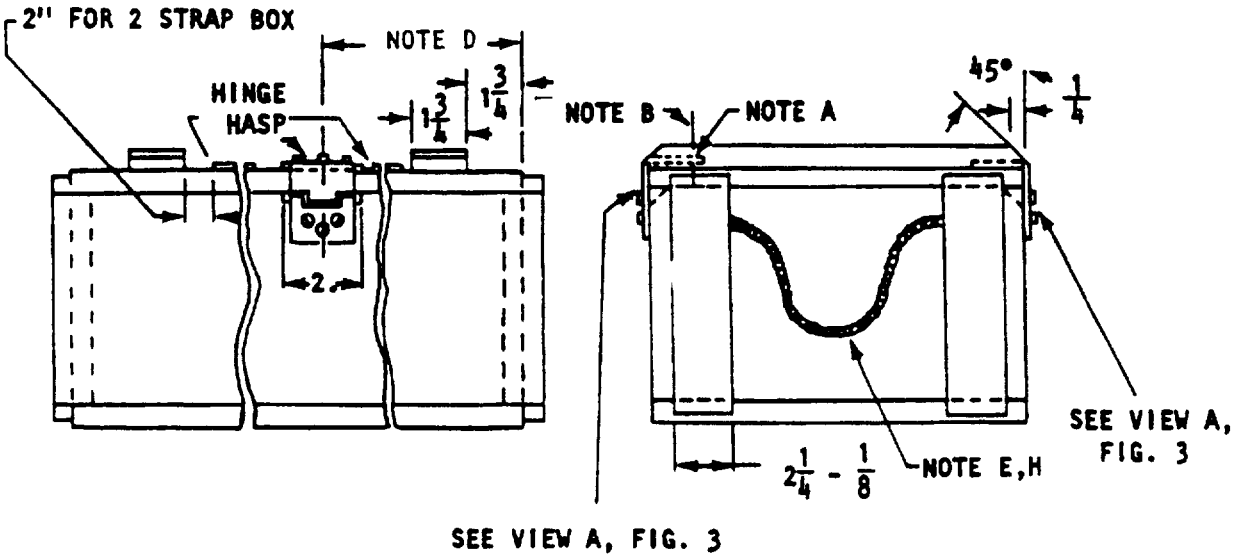

NOTES:

A - SWIVEL ASSEMBLY LENGTH TO BE PARALLEL WITH GRAIN OF WOOD IN COVER.
B - ℄ OF SWIVEL LOCATED SO THAT HASP PASSES TIGHTLY OVER SWIVEL.
C - SEE FIGURE 1 FOR CONSTRUCTION OF BOX.
D - LOCATED AT ℄ OF BOX FOR 2 STRAP BOX. LOCATED 1 1/2 FROM ℄ OF BOX FOR 1 STRAP OR THREE STRAP BOX.
E - SEE FIGURE 1 FOR VIEW OF ROPE HANDLE
F - SEE PAR. 3.4 FOR HARDWARE REQUIREMENTS.
G - UNLESS OTHERWISE SPECIFIED ALL WOOD SHALL BE 11/16 MIN. THICK.
H - SEE PAR. 3.3 FOR ROPE HANDLE REQUIREMENTS. SEE FIGURE 1A FOR LENGTH OF ROPE HANDLE
I - ONE HASP AND HINGE MAY BE USED ON BOXES 18 INCHES OR LESS INSIDE LENGTH DIMENSION (1)

FIGURE 5 - TYPE 11, CLASS 2 BOX

(1) WHEN ONE HINGE IS USED IT SHALL BE PLACED DIRECTLY BEHIND HASP.

Source: https://assist.dla.mil -- Downloaded: 2016-12-11T06:10Z
Check the source to verify that this is the current version before use.

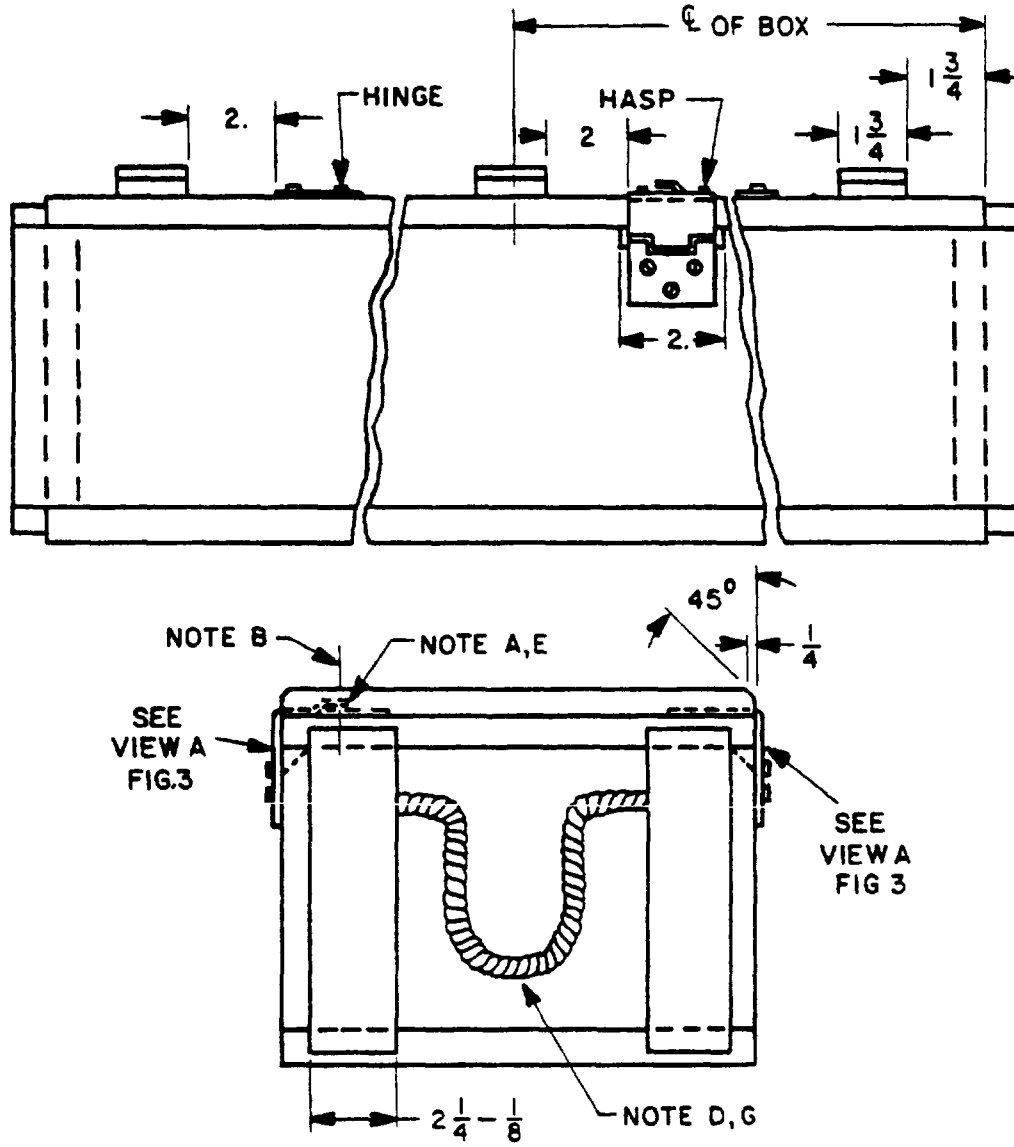

NOTES:

A - SWIVEL ASSEMBLY LENGTH TO BE PARALLEL WITH GRAIN OF WOOD IN COVER.
B - ℄ OF SWIVEL LOCATED SO THAT HASP PASSES TIGHTLY OVER SWIVEL.
C - SEE FIGURE 1 FOR CONSTRUCTION OF BOX.
D - SEE FIGURE 1 FOR VIEW OF ROPE HANDLE.
E - SEE PAR. 3.4 FOR HARDWARE REQUIREMENTS.
F - UNLESS OTHERWISE SPECIFIED ALL WOOD SHALL BE 11/16 MIN. THICK.
G - SEE PAR. 3.3 FOR ROPE HANDLE REQUIREMENTS. SEE FIGURE 1A FOR LENGTH OF ROPE HANDLE.

FIGURE 6 - TYPE 11, CLASS 3 BOX

Source: https://assist.dla.mil -- Downloaded: 2016-12-11T06:10Z
Check the source to verify that this is the current version before use.

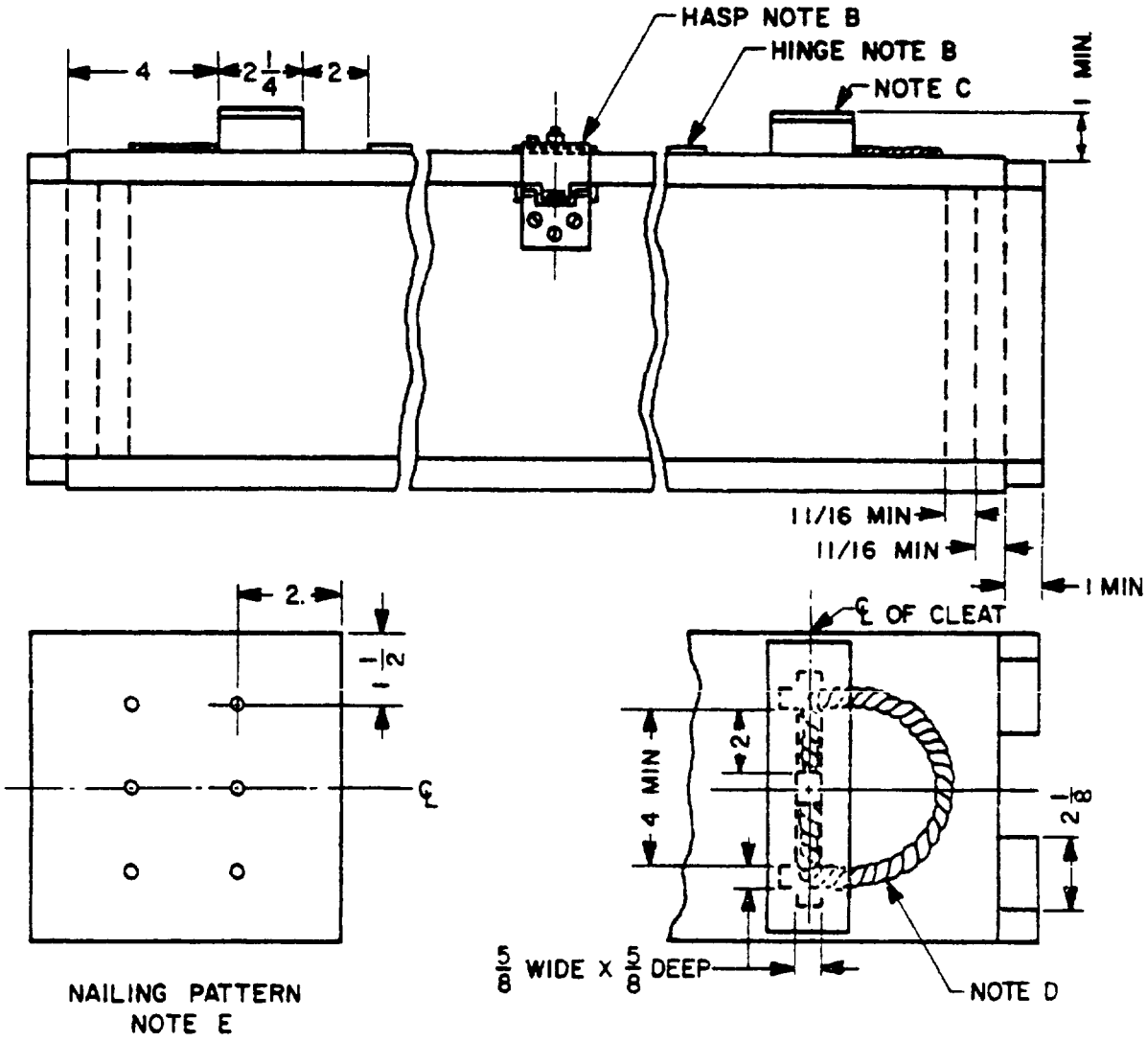

NOTES:

A - ALL LUMBER SHALL BE 11/16 MIN. EXCEPT AS NOTED.
B - ATTACH HARDWARE AS SHOWN ON FIGURE 5 FOR 2 STRAP BOX (SEE PAR. 3.4 FOR HARDWARE REQUIREMENTS).
C - BEVEL TOP CLEATS AS SHOWN ON FIGURE 5.
D - LENGTH 17 1/2 (SEE PAR. 3.3 AND FIGURE 1 FOR ADDITIONAL DETAILS)
E - FOR ADDITIONAL DETAILS OF DOUBLE END CONSTRUCTION, SEE FIGURE 8.
F - ONE HASP AND HINGE MAY BE USED ON BOXES 18 INCHES OR LESS INSIDE LENGTH DIMENSION (1).

FIGURE 7 - TYPE II, CLASS 4 BOX

(1) WHEN ONE HINGE IS USED IT SHALL BE PLACED DIRECTLY BEHIND HASP.

Source: https://assist.dla.mil - Downloaded: 2016-12-11T06:10Z
Check the source to verify that this is the current version before use.

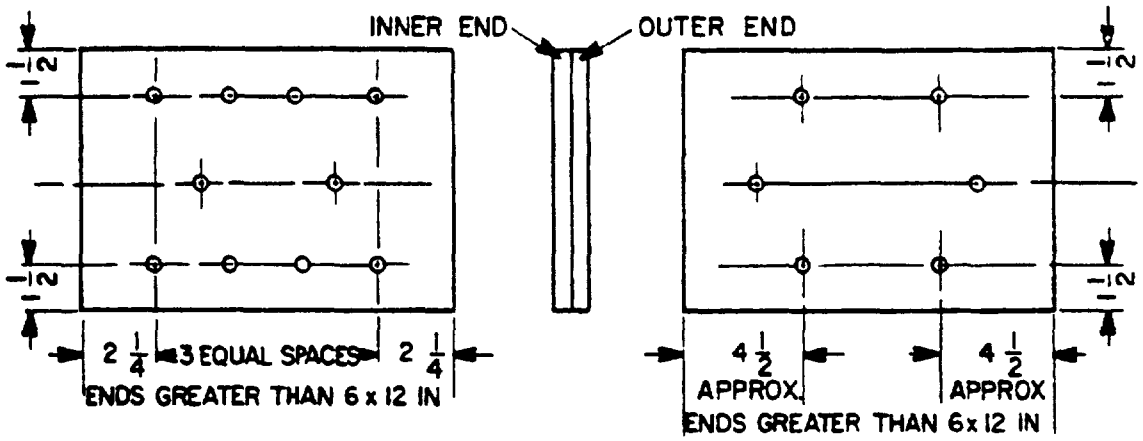

NAILING PATTERN FOR DOUBLE END-CLEAT CONSTRUCTION

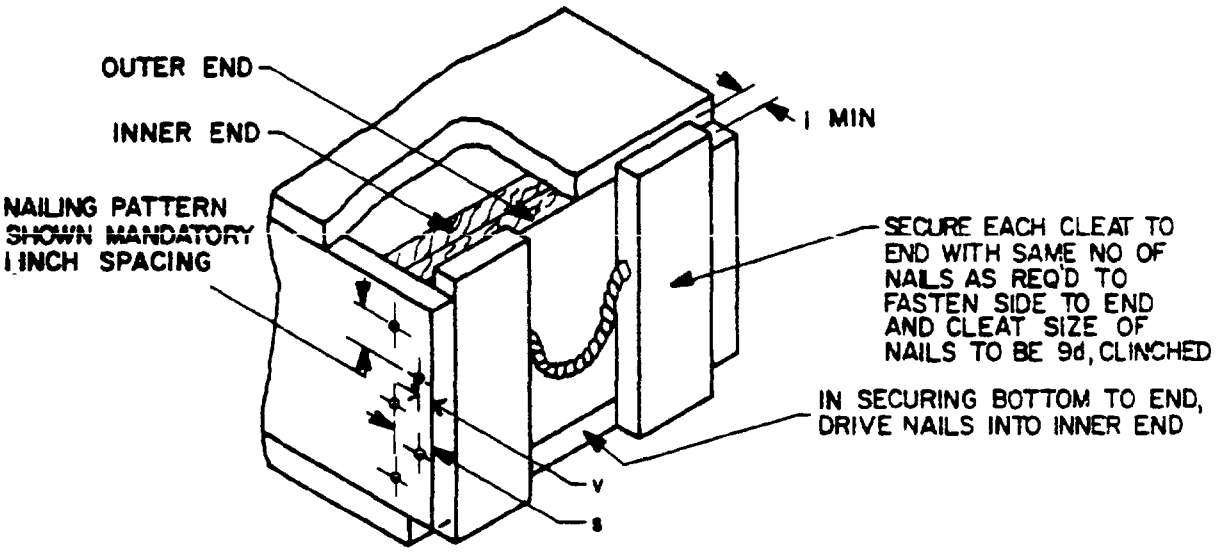

NOTES:

A - INNER END SHALL BE ONE PIECE: UNJOINTED WITH GRAIN PARALLEL WITH WIDTH OF BOX. OUTER END SHALL BE NOT MORE THAN 2 PIECES OF APPROXIMATELY EQUAL WIDTH, WITH GRAIN PARALLEL WITH DEPTH OF BOX. NAILS SHALL BE DRIVEN THROUGH OUTER END AND CLINCHED ON INNER END. NAIL SIZE SHALL BE 6d. LOCATION OF NAILS IS APPROXIMATE: STAGGER OFF CENTERS TO PREVENT SPLITTING.

B - FOR ADDITIONAL DETAILS OR CONSTRUCTION, SEE FIGURES 1 AND 6. WHEN COVER IS 33 INCHES OR MORE IN LENGTH THREE COVER CLEATS SHALL BE USED. OTHERWISE TWO COVER CLEATS SHALL BE USED.

O - SEE PARA. 3.3, FIGURES 1 and 1A FOR ROPE HANDLE REQUIREMENTS.

V - 1/2 THICKNESS OF CLEAT.

S - THICKNESS OF CLEAT PLUS 1/2 THICKNESS OF OUTER END PANEL.

FIGURE 8 - TYPE II CLASS 5 BOX

Source: https://assist.dla.mil -- Downloaded: 2016-12-11T06:10Z
Check the source to verify that this is the current version before use.

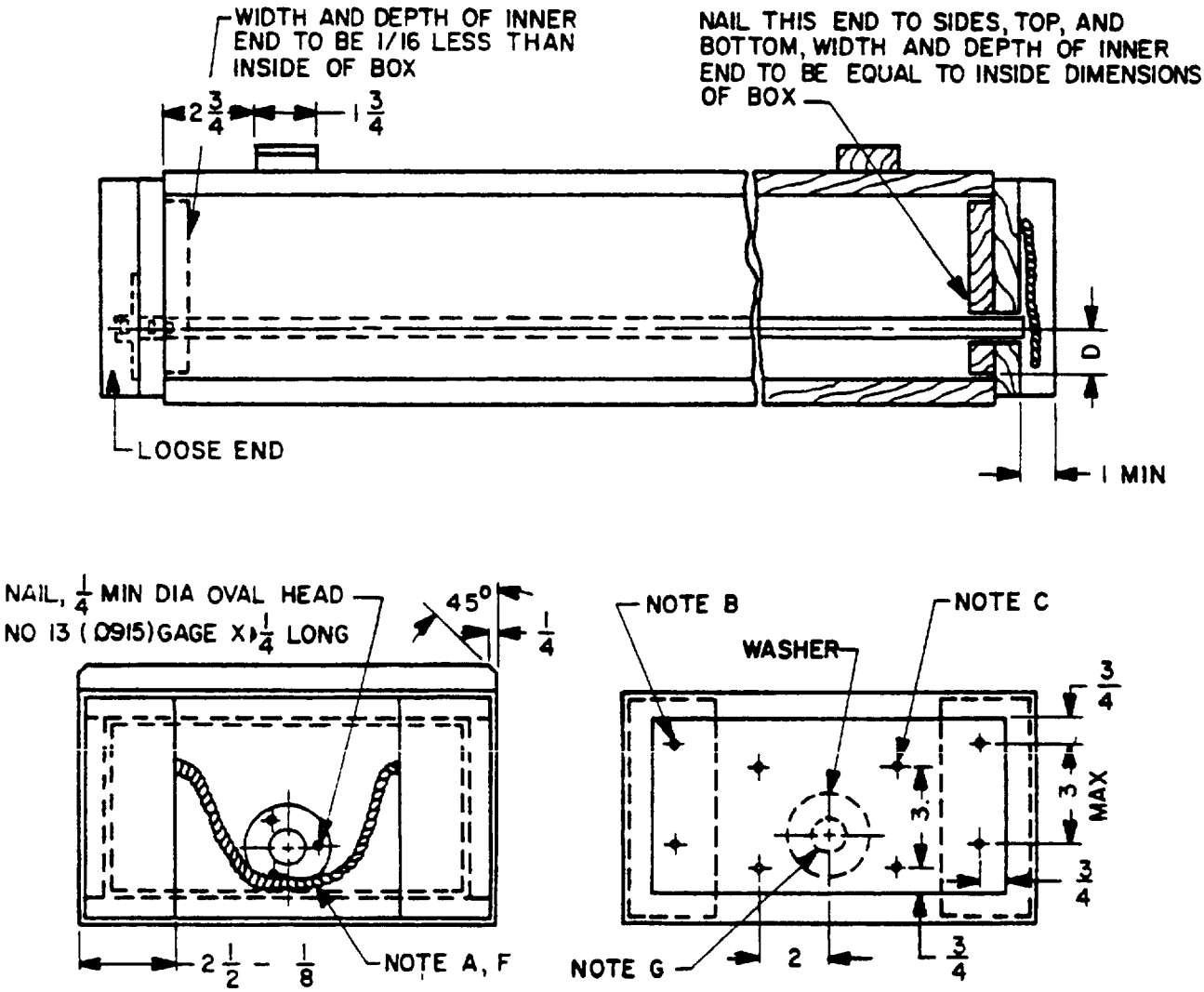

NOTES:

A - SEE FIGURE 1 FOR VIEW OF ROPE HANDLE AND ADDITIONAL NAILING
B - 4-6d NAILS, THROUGH INNER AND OUTER PIECES, INTO CLEATS.
C - 4-6d NAILS, THROUGH INNER AND OUTER PIECES, CLINCHED ON INTERIOR SURFACES.
D - DIMENSION TO BE FURNISHED BY APPLICABLE DRAWING.
E - ALL LUMBER SHALL BE 11/16 MIN. INCH THICK EXCEPT AS NOTED.
F - SEE PAR. 3.3 FOR ROPE HANDLE REQUIREMENTS. SEE FIGURE 1A FOR LENGTH OF ROPE HANDLE.
G - DIMENSIONS OF HOLE TO BE FURNISHED BY APPLICABLE DRAWING.

FIGURE 9 - TYPE III, CLASS 1 BOX

Source: https://assist.dla.mil -- Downloaded: 2016-12-11T06:10Z
Check the source to verify that this is the current version before use.

APPENDIX
(PART I)

BOX, AMMUNITION PACKING: WOOD, NAILED

10. SCOPE. This appendix covers closing and strapping requirements and inspection provisions for filled nailed wood ammunition packing boxes.

20 APPLICABLE SPECIFICATIONS AND DRAWINGS

20.1 Specifications

PPP-S-760 -	Strapping, Nonmetallic and Connectors
QQ-S-781 -	Strapping, Steel, and Seals

20.2 Drawings

8794342 -	Seal Metallic
8796522 -	Marking Diagram and Sealing for Wood Packing Boxes.

20.3 Standards

ASTM E8 -	Tension Testing of Metallic Materials
MIL-STD-105 -	Sampling Procedures and Tables for Inspection by Attributes.
MIL-STD-1235-	Single and Multilevel Continuous Sampling Procedures and Tables for Inspection by Attributes.

30 REQUIREMENTS

30.1 Closing.

30.1.1 Boxes without hardware. For overseas (Level A) use boxes without hardware shall have the lids nailed in place. Nailing shall be the same as that required for the bottom. For domestic (Level B or C) use nailing of the covers is not required. Two nails, placed in diagonally opposite corners, may be used to locate and hold the cover while the strapping is applied.

Source: https://assist.dla.mil -- Downloaded: 2016-12-11T06:10Z
Check the source to verify that this is the current version before use.

30.1.2 Boxes with hardware. Boxes with hardware shall be closed in accordance with Sealing Instructions on Drawing 8796522 using metallic seals complying with Drawing 8794342. Metallic seals are required on all overseas (Level A) packs. Metallic seals are not required for domestic (Level B or C) use except for LCL and LTL shipments. However, hasps and swivels shall be secured with wire when metallic seals are not used.

30.1.3 Interplant Reuse. When boxes without hardware are specified for domestic (Level B or C) use and reuse is intended boxes with hardware may be substituted. Two hinges on boxes less than 18 inches inside length may be used. Strapping of individual boxes is not required for full carload or truckload shipments.

30.2 Strapping. All boxes shall be strapped with the strapping being applied over the sides, top and bottom in accordance with Drawing 8796522. Unless otherwise specified boxes less than 18 inches in overall length shall have one strap, boxes 18 to 36 inches in length shall have two straps and boxes over 36 inches in length shall have three straps. Strapping shall be either round wire or flat steel as specified below. Boxes requiring one strap shall have the strap placed at the center of the box or adjacent to the hasp when hardware is used. Boxes requiring two straps shall have the straps placed just inside the cover cleats or between the cover cleats and the hinges when hardware is used. Boxes requiring three straps shall have two straps placed as described for the two strap box and the third strap placed as described for a one strap box. When a center cover cleat is required the third strap shall be placed between the cleat and the hasp.

30.2.1 Flat steel strapping. Flat steel strapping shall comply with Class 1, Type I or IV of QQ-S-781. Class A or B finish shall be used for overseas shipment (Level A); Class C may be used for domestic shipment (Level B or C). The size of strapping shall be 5/8 inch by .020 inch for all boxes except Type I, Class 3. Not less than two straps, 3/8 inch by .015 inch, shall be used for Type I, Class 3 boxes. Alternatively, for domestic use (Level B or C), nonmetallic strapping, 1/2 inch by .020 inch, complying with Type II of PPP-S-760, may be used on all boxes. Strapping shall be joined with commercial connectors of the size and kind designed for the strapping being used.

30.2.2 Round Wire Strapping. Round wire strapping for all boxes except Type I, Class 3 boxes shall comply with Class 2 of QQ-S-781. Finish A or B is required for overseas shipment (Level A). Any finish may be used for domestic shipments (Level B or

Source: https://assist.dla.mil -- Downloaded: 2016-12-11T06:10Z
Check the source to verify that this is the current version before use.

C). Wire of any gage listed in Table II of this Appendix and meeting the requirements of the table may be used. Only flat steel strapping may be used for Type I, Class 3 boxes.

40. Inspection Provisions.

40.1 Round wire strapping. The strapping used will have passed the following inspections and tests, authenticated by proper certification from the ammunition packing and packaging facility.

40.1.1 Sampling. One coil from each lot will be selected for test. When the condition of the outer turns of the coil does not appear to be representative of the condition of the rest of the wire in the coil, one or more turns shall be removed prior to taking the sample. Samples shall be approximately 20 feet long. When wire is in cut-lengths, one or more pieces shall be selected from each 500 pounds or fraction thereof for test, except five pieces may be taken to represent any lot of more than 2500 pounds of wire of the same gage and finish.

40.1.2 Diameter measurement test. Major defect. The diameter of the wire will be measured at two or more points along the length of each sample of wire. The wire at the points of measurement shall be straight. All measurements must conform to the pertinent requirements of Table II (see 30.2.2).

40.1.3 Breaking strength test. Major defect. One or more test specimens, 15 inches plus or minus 1 inch, from each sample of wire selected for test, will be subjected to a tensile test as specified in ASTM-E8 to determine that the breaking strength complies with the applicable requirement of Table II (see 30.2.2). The distance between the jaws of the testing machine, with the test specimen ready for testing, shall be not less than 11 inches.

40.1.4 Percentage elongation test. Major defect. The specimens used to determine the breaking strength (40.1.3) shall be used to determine the percent elongation as specified in ASTM-E8. Percentage elongation shall be the permanent increase in length, in percentage, due to the breaking of the wire in tension, measured between gage marks, upon the wire, originally 10 inches apart. Percentage elongation must comply with the applicable requirement of Table II (see 30.2.2).

40.2 Packed boxes.

Source: https://assist.dla.mil -- Downloaded: 2016-12-11T06:10Z
Check the source to verify that this is the current version before use.

40.2.1 Lot formation. A lot will consist of packed, strapped, marked and sealed ammunition boxes produced by one manufacturer in one unchanged process in accordance with the same drawing and same drawing revision. Lot size shall coincide with lot size of the ammunition being packed.

40.2.2 Examination. Sampling plans and procedures for Major and Minor defects shall be in accordance with MIL-STD-105 except that continuous sampling plans in accordance with MIL-STD-1235 may be used if approved by the procuring activity. Also, at the option of the procuring activity, AQL's and sampling plans may be applied to individual characteristics listed using an AQL of 0.65 percent for each Minor defect and an AQL of 0.40 percent for each Major defect.

40.2.2.1 Marked, sealed and strapped wooden packing box (see dwg. 8796522 and pertinent packed ammunition item dwg)

Categories	Defects AQL 1.00 percent	Method of Inspection
Major:		
101.	Box damaged	Visual
102.	Strapping, missing, broken, loose or improperly fastened	Visual/Manual
103.	Metallic seal missing or improperly attached (when specified)	Visual
104.	Hasps and swivels improperly secured (when specified)	Visual
105.	Handles missing, broken or loose (when specified)	Visual/Manual
106.	Hardware missing, broken or loose (when specified)	Visual/Manual
107.	Missing, incorrect or unidentifiable ammunition lot number or NSN	Visual
Minor:	AQL 2.50 percent	
201.	Contents loose	Manual
202.	Lid nailing pattern incorrect	Visual
203.	Marking (other than ammunition lot number or NSN) missing, incomplete or unidentifiable	Visual
204.	Strapping, improperly located	Visual
205.	Handles improperly assembled (when specified)	Visual
206.	Hardware improperly assembled (when specified)	Visual

Source: https://assist.dla.mil -- Downloaded: 2016-12-11T06:10Z
Check the source to verify that this is the current version before use.

TABLE II

Gage	Diameter	Breaking strength pounds minimum (min)		Ultimate tensile strength pounds per square inch (psi) min.[4]		Percent Elongation 10 inch min. (see note)	
		Class A[2]	Class B[3]	Class A	Class B	Class A	Class B
	Plus or Minus (±)						
12	.1055 ± .0025	500	342	57.000	39.000	14	18
13	.0915 ± .0025	500	342	77.000	52.00	12.5	16
14	.0800 ± .0025	500	342	100.000	68.000	10	13
15	.0720 ± .0015	500	342	125.00	85.000	8	11.5

Notes

1. When wire of greater tensile strength than that specified in Table II is supplied, the elongation shall be decreased proportionately to the increase of tensile strength above the listed values. In no case shall the elongation for Class A wire be less than 6 percent or more than 10 percent for Class B.

2. Class A is to used for overseas (Level A) shipment.

3. Class B is to be used for domestic (Level B or C) shipment

4. Values are for reference only.

Source: https://assist.dla.mil -- Downloaded: 2016-12-11T06:10Z
Check the source to verify that this is the current version before use.

BOX, AMMUNITION PACKING: WOOD, NAILED
(GOVERNMENT FURNISHED)

10. SCOPE

10.1 This appendix prescribes the criteria to be utilized to determine the serviceability of Government furnished boxes.

20. CLASSIFICATION

20.1 Types, classes and grades. This appendix covers the following types, classes and grades of box designs:

Type I	Top opening without rope handles
Class 1	Without hardware, with two cover cleats, See Figure 2.
Class 2	With hardware, with two cover cleats, See Figure 3.
Class 3	Without hardware, with two cover cleats, light construction. See Figure 2.
Type II	Top opening with two rope handles
Class 1	Without hardware, with two cover cleats. See Figure 4.
Class 2	With hardware, with two cover cleats. See Figure 5.
Class 3	With hardware, with three cover cleats. See Figure 6
Class 4	With hardware, with rope handles on cover cleats with double end construction. See Figure 7.
Class 5	With hardware, with double end construction. See Figure 8.

Source: https://assist.dla.mil -- Downloaded: 2016-12-11T06:10Z
Check the source to verify that this is the current version before use.

Type III	End opening with two rope handles
Class 1	With carriage bolt hardware, with two cover cleats and double end construction. See Figure 9.
Grade A	Preservative treated boxes for the unrestricted shipment, storage and handling of ammunition or explosive ammunition components.
Grade C	Boxes primarily for interplant shipment and for storage and handling under controlled conditions of ammunition or explosive ammunition components.

30 APPLICABLE DOCUMENTS

STANDARDS

MILITARY

MIL-STD-105 - Sampling Procedures and Tables for Inspection by Attributes

40 REQUIREMENTS

40.1 Workmanship. Boxes shall be free of imperfections which may affect their utility. In addition, the boxes shall be free of excessive splinters, metal projections, or sharp edges which may cause injury when manually handled (see 60.1).

50 INSPECTION PROVISIONS

50.1 Lot formation. The term "lot" as used throughout this specification refers to an inspection lot, which is defined as an essentially homogeneous collection of units of product from which a representative sample is drawn and inspected to determine conformance of the lot with applicable requirements. Inspection lots shall comply with MIL-STD-105.

50.2 Examination. Inspection for critical defects, (and major defects, when so specified) shall be 100 percent. Sampling plans and procedures for major and minor defects shall be in accordance with MIL-STD-105.

Source: https://assist.dla.mil -- Downloaded: 2016-12-11T06:10Z
Check the source to verify that this is the current version before use.

50.2.1 Assembly (see applicable drawing)

Catagories			Defects	Method of Inspection
Grade			Group AQL= 2.5% and individual AQL = 1.0% 2/	
A	C			
X	X	101.	Nail protruding inside box	Visual
X		102.	Split terminating in edge of board (see 3.2)	Visual
X	X	103.	Nail not clinched (see 3.6)	Visual
X	X	104.	Box deformed	Visual
X	X	105.	Holes not sufficiently separated (see 3.2)	Visual
X	X	106.	Contamination from explosive material or grease on interior	Visual
			Group AQL = 6.5% and individual AQL = 1.5%	
X	X	201.	Hardware insecure (see 4.4.2.1.4)	Manual
X	X	202.	Loose screw or screw not properly seated (see 4.4.2.1.3)	Visual/Manual
X	X	203.	Incorrect seating or operation of top	Visual/Manual
X	X	204.	Handle missing, broken, or loose	Visual/Manual
X	X	205.	Nail protruding outside box	Visual
X	X	206.	Split in board (see 3.2)	Visual
X	X	207.	Nail missing	Visual
X	X	208.	Nail bent on box surface	Visual
X		209.	Protective coating damaged (see 4.4.2.1.6)	Visual
	X	210.	Split terminating in edge of board (see 3.2)	Visual
	X	211.	Hardware rusted	Visual

60 NOTES

60.1 Reworked boxes. If economically repairable, and only under specific direction from the procuring contracting officer, boxes shall be reworked to comply with the applicable requirements of this document.

2/ When double sampling plans are used and neither the group characteristics nor the individual characteristics fail on the first sample, but one of them requires the second part of the double sample, then both the group and the individual will be judged by the results of the combined samples of the double sampling plan.

Source: https://assist.dla.mil -- Downloaded: 2016-12-11T06:10Z
Check the source to verify that this is the current version before use.

INSTRUCTIONS In a continuing effort to make our standardization documents better, the DoD provides this form for use in submitting comments and suggestions for improvements. All users of military standardization documents are invited to provide suggestions. This form may be detached, folded along the lines indicated, taped along the loose edge *(DO NOT STAPLE)*, and mailed. In block 5, be as specific as possible about particular problem areas such as wording which required interpretation, was too rigid, restrictive, loose, ambiguous, or was incompatible, and give proposed wording changes which would alleviate the problems. Enter in block 6 any remarks not related to a specific paragraph of the document. If block 7 is filled out, an acknowledgement will be mailed to you within 30 days to let you know that your comments were received and are being considered.

NOTE This form may not be used to request copies of documents, nor to request waivers, deviations, or clarification of specification requirements on current contracts. Comments submitted on this form do not constitute or imply authorization to waive any portion of the referenced document*(s)* or to amend contractual requirements.

(Fold along this line)

(Fold along this line)

DEPARTMENT OF THE ARMY

NO POSTAGE NECESSARY IF MAILED IN THE UNITED STATES

OFFICIAL BUSINESS
PENALTY FOR PRIVATE USE $300

BUSINESS REPLY MAIL
FIRST CLASS PERMIT NO 12062 WASHINGTON D C
POSTAGE WILL BE PAID BY THE DEPARTMENT OF THE ARMY

COMMANDER
US ARMY ARMAMENT RESEARCH & DEVELOPMENT CENTER
DRSMC-QA
DOVER, NJ 07801 5001

Source: https://assist.dla.mil -- Downloaded: 2016-12-11T06:10Z
Check the source to verify that this is the current version before use.

STANDARDIZATION DOCUMENT IMPROVEMENT PROPOSAL

(See Instructions – Reverse Side)

1. DOCUMENT NUMBER	2. DOCUMENT TITLE
MIL-B-2427G	BOX, AMMUNITION PACKING, WOOD, NAILED

3a. NAME OF SUBMITTING ORGANIZATION	4. TYPE OF ORGANIZATION *(Mark one)*
	☐ VENDOR
	☐ USER
b. ADDRESS *(Street, City, State, ZIP Code)*	☐ MANUFACTURER
	☐ OTHER *(Specify)* _____

5. PROBLEM AREAS

a. Paragraph Number and Wording

b. Recommended Wording

c. Reason/Rationale for Recommendation

6. REMARKS

7a. NAME OF SUBMITTER *(Last, First, MI)* – Optional	b. WORK TELEPHONE NUMBER *(Include Area Code)* – Optional
c. MAILING ADDRESS *(Street, City, State, ZIP Code)* – Optional	8. DATE OF SUBMISSION *(YYMMDD)*

DD FORM 82 MAR 1426 PREVIOUS EDITION IS OBSOLETE

Source: https://assist.dla.mil -- Downloaded: 2016-12-11T06:10Z
Check the source to verify that this is the current version before use.