MILITARY SPECIFICATION

SEMICONDUCTOR DEVICE, TRANSISTOR, NPN, SILICON, AMPLIFIER,
TYPES JANTX AND JANTXV, 2N5681 AND 2N5682

This specification is approved for use by all Departments and Agencies of the Department of Defense.

1. SCOPE

1.1 Scope. This specification covers the detail requirements for NPN, silicon, amplifier transistor. Two levels of product assurance are provided for each device type as specified in MIL-S-19500.

1.2 Physical dimension. See figure 1 (TO-39).

1.3 Maximum rating.

Device types	P_T		V_{CBO}	V_{CEO}	V_{EBO}	I_C	I_B	T_{stg} and T_J
	T_A = 25°C 1/	T_C = 25°C 2/						
	W	W	V dc	V dc	V dc	A dc	A dc	°C
2N5681	1.0	10	100	100	4.0	1.0	0.5	-65 to +200
2N5682	1.0	10	120	120	4.0	1.0	0.5	

1/ Derate linearly 5.7 mW/°C for T_A > 25°C
2/ Derate linearly 57 mW/°C for T_C > 25°C

1.4 Primary electrical characteristics.

Limits	h_{FE} at V_{CE} = 2.0 V dc 1/			$R_{\theta JC}$
	h_{FE1}	h_{FE2}	h_{FE3}	
	I_C = 250 mA dc	I_C = 500 mA dc	I_C = 1.0 A dc	
Min	40	20	5	°C/W
Max	150			17.5

Beneficial comments (recommendations, additions, deletions) and any pertinent data which may be of use in improving this document should be addressed to: Commander, Space and Naval Warfare Systems, ATTN: Code 8111, Washington DC, 20363, by using the self-addressed Standardization Document Improvement Proposal (DD Form 1426) appearing at the end of this document or by letter.

DISTRIBUTION STATEMENT A. Approved for public release; distribution is unlimited.

Source: https://assist.dla.mil -- Downloaded: 2016-12-04T18:40Z
Check the source to verify that this is the current version before use.

Limits	$\|h_{fe}\|$ f = 10 MHz V_{CE} = 10 V dc I_C = 100 mA dc	C_{obo} f = 1.0 MHz V_{CB} = 20 V dc I_E = 0	$V_{CE}(sat)1$ 1/ I_C = 250 mA dc I_B = 25 mA dc	$V_{BE}(sat)1$ 1/ I_C = 250 mA dc I_B = 25 mA dc
		pF	V dc	V dc
Min	3.0			
Max		50	0.6	1.1

1/ Pulsed; see 4.5.1

2. APPLICABLE DOCUMENTS

2.1 Government documents.

2.1.1 Specifications, standards, and handbooks. The following specifications, standards, and handbooks form a part of this document to the extent specified herein. Unless otherwise specified, the issues of these documents are those listed in the issue of the Department of Defense Index of Specifications and Standards (DODISS) and supplement thereto, cited in the solicitation (see 6.2).

SPECIFICATION

MILITARY

MIL-S-19500 - Semiconductor Devices, General Specification For.

STANDARD

MILITARY

MIL-STD-750 - Test Method for Semiconductor Devices.

(Unless otherwise indicated, copies of federal and military specifications, standards, and handbooks are available from the Naval Publications and Forms Center, (ATTN: NPODS), 5801 Tabor Avenue, Philadelphia, PA 19120-5099.)

2.2 Order of precedence. In the event of a conflict between the text of this document and the references cited herein, the text of this document takes precedence. Nothing in this document, however, supersedes applicable laws and regulations unless a specific exemption has been obtained.

3. REQUIREMENTS

3.1 Detail specification. The individual item requirements shall be in accordance with MIL-S-19500, and as specified herein.

3.2 Abbreviations, symbols, and definitions. Abbreviations, symbols, and definitions used herein shall be specified in MIL-S-19500.

3.3 Design, construction, and physical dimensions. The design, construction, and physical dimensions shall be as specified in MIL-S-19500, and figure 1 herein.

Source: https://assist.dla.mil -- Downloaded: 2016-12-04T18:40Z
Check the source to verify that this is the current version before use.

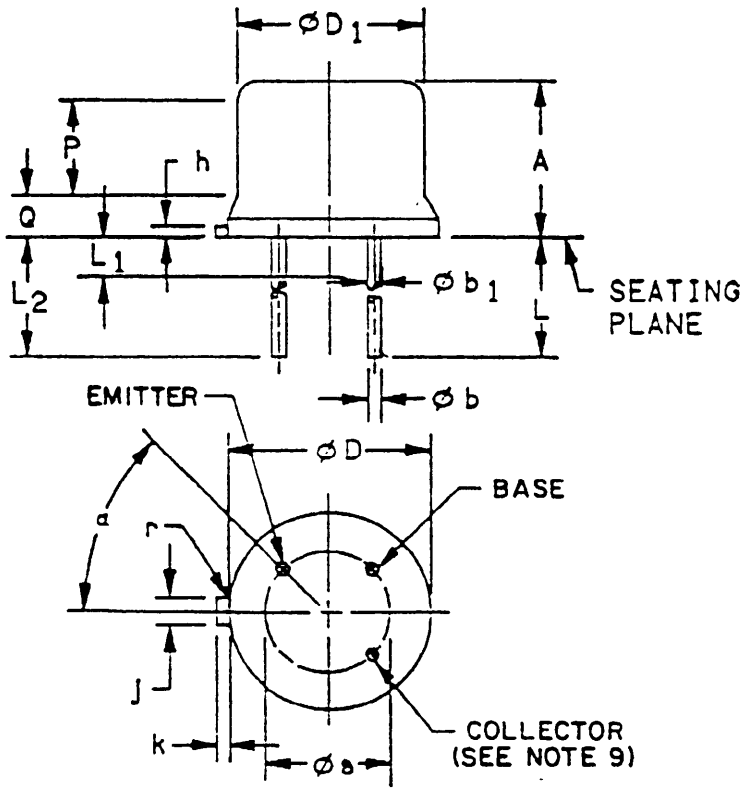

FIGURE 1. Physical dimensions (TO-39).

Source: https://assist.dla.mil -- Downloaded: 2016-12-04T18:40Z
Check the source to verify that this is the current version before use.

Ltr	Dimensions				Notes
	Inches		Millimeters		
	Min	Max	Min	Max	
A	.240	.260	6.10	6.60	
øa	.200 TP		5.08 TP		6
øb	.016	.021	0.41	0.53	7, 6
$øb_1$	.016	.019	0.41	0.48	7, 8
øD	.335	.370	8.51	9.40	
$øD_1$	.305	.335	7.75	8.51	
h	.009	.041	0.23	1.04	
j	.028	.034	0.71	0.86	2

Ltr	Dimensions				Notes
	Inches		Millimeters		
	Min	Max	Min	Max	
k	.029	.045	0.74	1.14	3
L	.500	.750	12.70	19.05	7, 8
L_1	---	.050	---	1.27	7, 8
L_2	.250	---	6.35	---	7, 8
P	.100	---	2.54	---	5
Q	---	.050	---	1.27	4
r	---	.010	---	0.25	10
α	45 TP		45 TP		6

NOTES:

1. Metric equivalents are given for general information only.
2. Beyond r (radius) maximum, j shall be held for a minimum length of .011 (0.28 mm).
3. k measured from maximum øD.
4. Outline in this zone is not controlled.
5. $øD_1$ shall not vary more than .010 (0.25 mm) in zone P. This zone is controlled for automatic handling.
6. Leads at gauge plane .054 +.001 -.000 (1.37 +0.03 -0.00 mm) below seating plane shall be within .007 (0.18 mm) radius of true position (TP) at maximum material condition (MMC) relative to tab at MMC. The device may be measured by direct methods or by the gauge and gauging procedure shown in figure 2.
7. øb1 applies between L_1 and L_2. øb applies between L_2 and L minimum. Diameter is uncontrolled in L_1 and beyond L minimum.
8. All three leads.
9. The collector shall be electrically and mechanically connected to the case.
10. r (radius) applies to both inside corners of tab.

FIGURE 1. Physical dimensions (TO-39) - Continued.

Source: https://assist.dla.mil -- Downloaded: 2016-12-04T18:40Z
Check the source to verify that this is the current version before use.

Ltr	Dimensions				Notes
	Inches		Millimeters		
	Min	Max	Min	Max	
ϕb_1	.0595	.0605	1.51	1.537	
ϕb_2	.0325	.0335	0.826	0.851	
e	.1995	.2005	5.067	5.093	
e_1	.0995	.1005	2.527	2.553	
h	.150 Nominal		3.81 Nominal		
j	.0175	.0180	0.444	0.457	
k	.009	.011	0.23	0.28	
k_1	.125 Nominal		3.18 Nominal		
L	.372	.378	9.45	9.60	
L_1	.054	.055	1.37	1.40	
S	.182	.199	4.62	5.05	1
a	44.90°	45.10°	44.90°	45.10°	

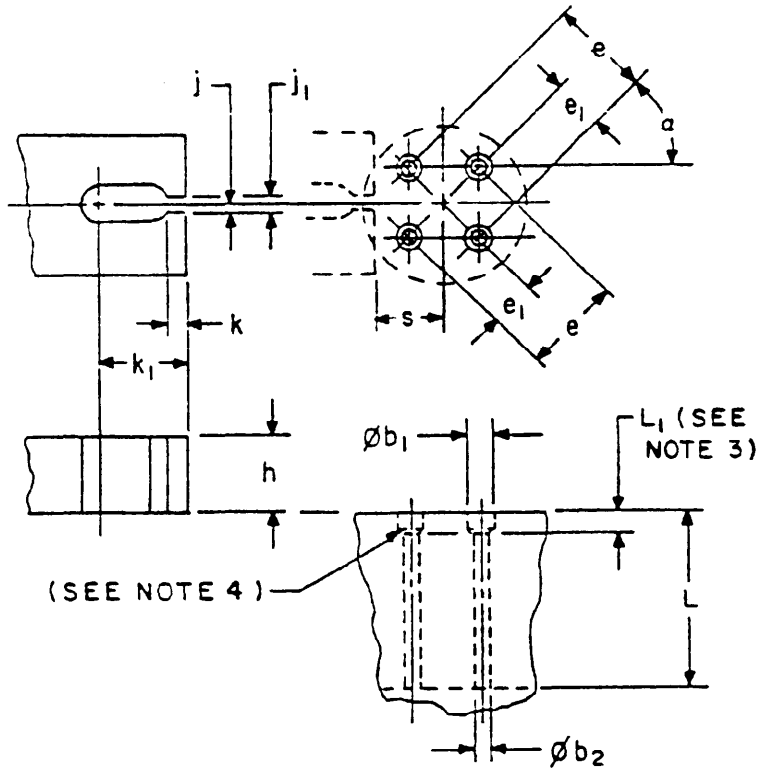

NOTES:
1. The location of the tab locator within the limits indicated will be determined by the tab and flange dimensions of the device being checked.
2. Gauging procedure. The device being measured shall be inserted until its seating plane is .125 ±.010 (3.18 ±0.25 mm) from the seating surface of the gauge. A force of 8 ±.5 oz shall then be applied parallel and symmetrical to the device's cylindrical axis. When examined visually after the force application (the force need not be removed) the seating plane of the device shall be seated against the gauge. The use of a pin straightener prior to insertion in the gauge is permissible.
3. Gauging plane.
4. Drill angle.
5. Metric equivalents are given for general information only.

FIGURE 2. Gauge for lead and tab locations.

Source: https://assist.dla.mil -- Downloaded: 2016-12-04T18:40Z
Check the source to verify that this is the current version before use.

3.3.1 Lead material and finish. Lead material shall be kovar or alloy 52; a copper core is permitted. Lead finish shall be solderable in accordance with MIL-S-19500, MIL-STD-750 and herein. Where a choice of lead material or finish is desired, it shall be specified in the contract or purchase order (see 6.2).

3.4 Marking. Marking shall be in accordance with MIL-S-19500. At the option of the manufacturer, the following marking may be omitted from the body of the transistor:

a. Country of origin.

b. Manufacturer's Identification.

4. QUALITY ASSURANCE PROVISIONS

4.1 Sampling and inspection. Sampling and inspection shall be in accordance with MIL-S-19500, and as specified herein.

4.2 Qualification inspection. Qualification inspection shall be in accordance with MIL-S-19500. See 4.3.2 herein.

4.2.1 Group E inspection. Group E inspection shall be as specified in table IV herein.

4.3 Screening (JANTXV, and JANTX levels only). Screening shall be in accordance with MIL-S-19500 (table II), and as specified herein. The following measurements shall be made in accordance with table I herein. Devices that exceed the limits of table I herein shall not be acceptable.

Screen (see table II of MIL-S-19500)	Measurement JANTX and JANTXV levels
1/	Method 3131, see 4.3.2.
11	I_{CBO} and h_{FE2}
12	See 4.3.1
13	ΔI_{CBO} = 100% of initial value or 10 nA dc whichever is greater; Δh_{FE2} = ± 15% of initial value; Subgroup 2 of group A

1/ Shall be performed anytime before screen 10.

4.3.1 Power burn-in conditions. Power burn-in conditions are as follows:

$V_{CB} \geq 20$ V dc

P_T 1.0 W at $T_A = 30°C \pm 5°$

NOTE: No heatsink or forced air cooling on the devices shall be permitted.

Source: https://assist.dla.mil -- Downloaded: 2016-12-04T18:40Z
Check the source to verify that this is the current version before use.

4.3.2 Thermal response (ΔV_{BE} measurements). The ΔV_{BE} measurements shall be performed in accordance with method 3131 of MIL-STD-750. The ΔV_{BE} conditions and maximum V_{BE} limit shall be derived by each vendor. The chosen ΔV_{BE} measurement and conditions for each device in the qualification lot and read and record measurements shall be submitted in the qualification report and a thermal response curve shall be plotted. The chosen V_{BE} values shall be considered final after the manufacturer has had the opportunity to test five consecutive lots. The following measurement conditions shall apply.

a.	I_M measurement current	5 mA
b.	V_{CE} measurement voltage	20 V (same as V_H)
c.	I_H collector heating current	500 mA (min)
d.	V_H collector-emitter heating voltage	20 V (min)
e.	t_H heating time	1200 ms
f.	t_{MD} measurement delay time	5 µs
g.	t_{SW} sample window time	10 µs (max)

4.3.3 Thermal resistance. Thermal resistance measurements shall be conducted in accordance with method 3131 of MIL-STD-750. The maximum limit of $R_{\theta JC}$ shall be 17.5°C/W. The following conditions shall apply.

a. Heating power shall be chosen such that the calculated junction to reference point temperature difference is greater than 50°C.

b. Collector to emitter voltage magnitude shall be 20 V dc.

c. Reference temperature measuring point shall be the case.

d. Reference point temperature shall be 25°C $\leq T_R \leq$ 35°C and recorded before the test is started.

e. Mounting arrangement shall be with heat sink to case.

f. Maximum limit shall be $R_{\theta JC}$ = 17.5°C/W.

4.4 Quality conformance inspection. Quality conformance inspection shall be in accordance with MIL-S-19500.

4.4.1 Group A inspection. Group A inspection shall be conducted in accordance with MIL-S-19500, and table I herein. (Endpoint electrical measurements shall be in accordance with the applicable steps of table V herein).

4.4.2 Group B inspection. Group B inspection shall be conducted in accordance with the conditions specified for subgroup testing in table IVb (JANTX and JANTXV) of MIL-S-19500, and tables IIa and IIb herein. Electrical measurements (end points) and delta requirements shall be in accordance with the applicable steps of table V herein.

4.4.3 Group C inspection. Group C inspection shall be conducted in accordance with the conditions specified for subgroup testing in table V of MIL-S-19500, and table III herein. Electrical measurements (end points) and delta requirements shall be in accordance with the applicable steps of table V herein.

4.5 Methods of inspection. Methods of inspection shall be as specified in the appropriate tables and as follows:

4.5.1 Pulse measurements. Conditions for pulse measurement shall be as specified in section 4 of MIL-STD-750.

Source: https://assist.dla.mil -- Downloaded: 2016-12-04T18:40Z
Check the source to verify that this is the current version before use.

TABLE I. Group A inspection

Inspection 1/	MIL-STD-750		Symbol	Limits		Unit
	Method	Conditions		Min	Max	
Subgroup 1						
Visual and mechanical examination	2071					
Subgroup 2						
Breakdown voltage, collector to emitter 2N5681 2N5682	3011	Bias condition D pulsed (see 4.5.1) I_C = 10 mA dc	$V_{(BR)CEO}$	 100 120		V dc
Collector to base cutoff current 2N5681 2N5682	3036	Bias condition D V_{CB} = 100 V dc V_{CB} = 120 V dc	I_{CBO}		100	nA dc
Collector-emitter cutoff current 2N5681 2N5682	3041	Bias condition A V_{BE} = ± 1.5 V dc V_{CE} = 100 V dc V_{BE} = 1.5 V dc V_{CE} = 120 V dc	I_{CEX1}		100	nA dc
Collector-emitter cutoff current 2N5681 2N5682	3041	Bias condition D V_{CE} = 70 V dc V_{CE} = 80 V dc	I_{CEO}		10	uA dc
Emitter to base cutoff current	3061	Bias condition D V_{EB} = 4.0 V dc	I_{EBO}		1.0	uA dc
Forward-current transfer ratio	3076	Pulsed (see 4.5.1) I_C = 250 mA dc V_{CE} = 2.0 V dc	h_{FE1}	40	150	
Forward-current transfer ratio	3076	Pulsed (see 4.5.1) I_C = 500 mA dc V_{CE} = 2.0 V dc	h_{FE2}	20		
Forward-current transfer ratio	3076	Pulsed (see 4.5.1) I_C = 1.0 A dc V_{CE} = 2.0 V dc	h_{FE3}	5		
Collector to emitter voltage (saturated)	3071	Pulsed (see 4.5.1) I_C = 250 mA dc I_B = 25 mA dc	$V_{CE(sat)1}$		0.6	V dc
Collector to emitter voltage (saturated)	3071	Pulsed (see 4.5.1) I_C = 500 mA dc I_B = 50 mA dc	$V_{CE(sat)2}$		1.0	V dc

See footnote at end of table.

Source: https://assist.dla.mil -- Downloaded: 2016-12-04T18:40Z
Check the source to verify that this is the current version before use.

TABLE I. Group A inspection - Continued.

Inspection 1/	MIL-STD-750		Symbol	Limits		Unit
	Method	Conditions		Min	Max	
Base emitter voltage (saturated)	3066	Test condition A pulsed (see 4.5.1) I_C = 250 mA dc I_B = 25 mA dc	$V_{BE(sat)1}$		1.1	V dc
Base emitter voltage (saturated)	3066	Test condition A pulsed (see 4.5.1) I_B = 50 mA dc I_C = 500 mA dc	$V_{BE(sat)2}$		1.3	V dc
Subgroup 3						
High-temperature operation:		T_A = +150°C				
Collector to emitter cutoff current 2N5681	3041	Bias condition A V_{BE} = ± 1.5 V dc V_{CE} = 100 V dc	I_{CEX2}		1.0	mA dc
2N5682		V_{BE} = 1.5 V dc V_{CE} = 120 V dc				
Low-temperature operation:		T_A = -55°C				
Forward-current transfer ratio	3076	Pulsed (see 4.5.1) I_C = 250 mA dc V_{CE} = 2.0 V dc	h_{FE4}	20		
Subgroup 4						
Small-signal short-circuit forward-current transfer ratio	3206	V_{CE} = 1.5 V dc I_C = 0.2 A dc f = 1.0 kHz	h_{fe}	40		
Magnitude of small-signal short-circuit forward-current transfer ratio	3306	V_{CE} = 10 V dc I_C = 0.1 A dc f = 10 MHz	$\|h_{fe}\|$	3		
Open circuit output capacitance	3236	V_{CB} = 20 V dc; I_E = 0 f = 1 MHz	C_{obo}		50	pF

See footnote at end of table.

Source: https://assist.dla.mil -- Downloaded: 2016-12-04T18:40Z
Check the source to verify that this is the current version before use.

TABLE I. Group A inspection - Continued.

Inspection 1/	MIL-STD-750	
	Method	Conditions
Subgroup 5		
Safe operating area (continuous dc)	3051	T_C = 25°C t ≥ 0.5 s 1 cycle
Test 1		I_C = 1.0 A dc V_{CE} = 2 V dc
Test 2		I_C = 1.0 A dc V_{CE} = 10 V dc
Test 3		I_C = 50 mA dc V_{CE} = 90 V dc
End point electrical		See table V, steps 1, 2, 3, and 4
Subgroup 6 and 7		
N/A		

1/ For sampling plan, see MIL-S-19500.

Source: https://assist.dla.mil -- Downloaded: 2016-12-04T18:40Z
Check the source to verify that this is the current version before use.

TABLE II. Group B inspection for JANTX, JANTXV devices.

Inspection 1/	MIL-STD-750	
	Method	Conditions
Subgroup 1 2/ 3/		
Solderability	2026	
Resistance to solvents	1022	
Subgroup 2		
Thermal shock (temperature cycling)	1051	
Hermetic seal	1071	
a. Fine leak b. Gross leak		
Electrical measurements		See table V, steps 1, 2, 3, and 4
Subgroup 3		
Steady-state operation life	1027	$V_{CB} \geq 20$ V dc $P_T = 1.0$ W $T_A = 30°C \pm 5°C$ No heat sink or forced air cooling on the devices shall be permitted.
Electrical measurements		See table V, steps 1, 2, 3, 4, 5, and 6
Subgroup 4 2/ 3/		
Decap internal visual (design verification)	2075	
Bond strength	2037	Test condition A; all internal wires for each device shall be pulled separately.
Subgroup 5		
N/A		

See footnotes at end of table.

Source: https://assist.dla.mil -- Downloaded: 2016-12-04T18:40Z
Check the source to verify that this is the current version before use.

TABLE II. Group B inspection for JANTX, JANTXV devices - Continued.

Inspection 1/	MIL-STD-750	
	Method	Conditions
Subgroup 6		
High-temperature life (non-operating)	1032	T_A = 200°C
Electrical measurements		See table V, steps 1, 2, 3 4, 5, and 6

1/ For sampling plan see MIL-S-19500.
2/ Separate samples may be used for each test.
3/ Electrical reject devices from the same inspection lot may be used for all subgroups when electrical end-point measurements are not required.

Source: https://assist.dla.mil -- Downloaded: 2016-12-04T18:40Z
Check the source to verify that this is the current version before use.

TABLE III. Group C inspection (all quality levels).

Inspection 1/	MIL-STD-750	
	Method	COnditions
Subgroup 1		
Physical dimensions	2066	See figure 1.
Subgroup 2		
Thermal shock (glass strain)	1056	Test condition A
Terminal strength	2036	Test condition E
Hermetic Seal a. Fine leak b. Gross leak	1071	
Moisture resistance	1021	
Electrical measurements		See table V, steps 1, 2, 3, and 4
Subgroup 3		
Shock	2016	
Vibration, variable frequency	2056	
Constant acceleration	2006	
Electrical measurements		See table V, steps 1, 2, 3, and 4
Subgroup 4		
Salt atmosphere (corrosion)	1041	
Subgroup 5		
N/A		

See footnote at end of table.

Source: https://assist.dla.mil -- Downloaded: 2016-12-04T18:40Z
Check the source to verify that this is the current version before use.

TABLE III. Group C inspection (all quality levels) - Continued.

Inspection	MIL-STD-750		Sampling plan 1/	Symbol	Limits		Unit
	Method	Conditions			Min	Max	
Subgroup 6							
Steady-state-operation life	1026	V_{CB} = 20 V dc P_T = 1.0 W at T_A = 30°C ± 3°C. No heat sink or forced air cooling on the devices shall be permitted.					
Electrical measurements		See table V steps 1, 2, 3, 4, 5 and 6					
Subgroup 7			22 devices c = 0				
High-temperature operation		T_A = 150°C					
Collector to emitter voltage (saturated)	3071	I_C = 250 mA dc I_B = 25 mA dc pulsed (see 4.5.1)		$V_{CE(sat)3}$		0.65	V dc
Low-temperature operation		T_A = -55°C					
Base emitter voltage (saturated)	3066	Test condition A I_C = 250 mA dc I_B = 25 mA dc pulsed (see 4.5.1)		$V_{BE(sat)3}$		1.2	V dc

1/ For sampling plan, see MIL-S-19500.

Source: https://assist.dla.mil -- Downloaded: 2016-12-04T18:40Z
Check the source to verify that this is the current version before use.

TABLE IV Group E inspection for (all quality levels) for qualification only.

Inspection	MIL-STD-750		Qualification and large lot quality conformance inspection
	Method	Conditions	
Subgroup 1			22 devices c = 0
Thermal shock (glass strain)	1056	0°C to 100°C, 100 cycles	
Electrical measurements		See table V, steps 1, 2, 3, 4, 5, 6, and 7	
Hermetic Seal a. Fine leak b. Gross leak	1071		
Subgroup 2			32 devices c = 0
High temperature Reverse Bias	1039	Condition A; 1000 hrs.	
Electrical measurements		See table V, steps 2 and 4	
Subgroup 3			3 devices c = 0
DPA	2102		
		Vendor shall retain duplicate photos.	
Subgroup 4			22 devices c = 0
Thermal resistance	3131	$R_{\theta JC}$ = 17.5°C/W maximum see 4.3.3	
Subgroup 5			
Not applicable			

Source: https://assist.dla.mil -- Downloaded: 2016-12-04T18:40Z
Check the source to verify that this is the current version before use.

TABLE V. Group A, B, and C electrical measurements.

Step	Inspection	MIL-STD-750 Method	MIL-STD-750 Conditions	Symbol	Limits Min	Limits Max	Unit
1	Collector to base cutoff current 2N5681 2N5682	3036	Bias condition D V_{CB} = 100 V dc V_{CB} = 120 V dc	I_{CBO}		100	nA dc
2	Collector to emitter voltage (saturated)	3071	Pulsed (see 4.5.1) I_C = mA dc I_B = 25 mA dc	$V_{CE(sat)1}$		0.6	V dc
3	Base emitter voltage (saturated)	3066	Test condition A pulsed (see 4.5.1) I_C = 250 mA dc I_B = 25 mA dc	$V_{BE(sat)1}$		1.1	V dc
4	Forward-current transfer ratio	3076	Pulsed (see 4.5.1) I_C = 250 mA dc V_{CE} = 2.0 V dc	h_{FE1}	40	150	
5	Collector to base cutoff current 2N5681 2N5682	3036	Bias condition D V_{CB} = 100 V dc V_{CB} = 120 V dc	ΔI_{CBO1} 1/	100% of initial value or 10 nA dc whichever is greater.		
6	Forward-current transfer ratio	3076	V_{CE} = 2.0 V dc I_C = 250 mA dc pulsed (see 4.5.1)	Δh_{FE1} 1/	±25% change from initial recorded value		

1/ Devices which exceed the group A limits for this test shall not be shipped.

Source: https://assist.dla.mil -- Downloaded: 2016-12-04T18:40Z
Check the source to verify that this is the current version before use.

5. PACKAGING

5.1 Packaging requirements. The requirements for packaging shall be in accordance with MIL-S-19500.

6. NOTES

(This section contains information of a general or explanatory nature that may be helpful, but is not mandatory.)

6.1 Notes. The notes specified in MIL-S-19500 are applicable to this specification.

6.2 Ordering data. Acquisition documents may specify the lead material and finish (see 3.3.1).

6.3 Application guidance. The following PNP type transistor is complimentary to the NPN device listed herein.

NPN	PNP
2N5681	2N5679
2N5682	2N5680

6.4 Substitution information. Devices covered by this specification are substitutable for the manufacturer's and user's part number. This information in no way implies that manufacturer's part numbers are suitable as a substitute for the military part number.

Military PIN	Manufacturer's code cage	Manufacturer's and user's PIN
JANTX 2N5681 or JANTXV 2N5681	04713	2N5681 ST1113H
JANTX 2N5682 or JANTXV 2N5682	04713	2N5682 ST1211H

CONCLUDING MATERIAL

Custodians:
Army - ER
Navy - EC
Air Force - 17

Review activities:
Army - AR, MI
Air Force - 11, 19, 85
DLA - ES

User activities:
Army - SM
Navy - AS, CG, MC, OS
Air Force - 13
NASA - MSFC - EG02

Preparing activity:
Navy - EC

Agent:
DLA - ES

(Project 5961-1137-4)

Source: https://assist.dla.mil -- Downloaded: 2016-12-04T18:40Z
Check the source to verify that this is the current version before use.

STANDARDIZATION DOCUMENT IMPROVEMENT PROPOSAL

INSTRUCTIONS

1. The preparing activity must complete blocks 1, 2, 3, and 8. In block 1, both the document number and revision letter should be given.
2. The submitter of this form must complete blocks 4, 5, 6, and 7.
3. The preparing activity must provide a reply within 30 days from receipt of the form.

NOTE: This form may not be used to request copies of documents, nor to request waivers, or clarification of requirements on current contracts. Comments submitted on this form do not constitute or imply authorization to waive any portion of the referenced document(s) or to amend contractual requirements.

I RECOMMEND A CHANGE:	1. DOCUMENT NUMBER	2. DOCUMENT DATE (YYMMDD)
	MIL-S-19500/583	23 Apr 90

3. DOCUMENT TITLE
Semiconductor Device, Transistor, NPN, Silicon, Amplifier

4. NATURE OF CHANGE (Identify paragraph number and include proposed rewrite, if possible. Attach extra sheets as needed.)

5. REASON FOR RECOMMENDATION

6. SUBMITTER

a. NAME (Last, First, Middle Initial)	b. ORGANIZATION	
c. ADDRESS (Include Zip Code)	d. TELEPHONE (Include Area Code) (1) Commercial (2) AUTOVON (If applicable)	7. DATE SUBMITTED (YYMMDD)

8. PREPARING ACTIVITY

a. NAME	b. TELEPHONE (Include Area Code) (1) Commercial	(2) AUTOVON
Alan Barone	(513)296-6048	986-6048
c. ADDRESS (Include Zip Code) DESC-ECT Dayton, OH 45066	IF YOU DO NOT RECEIVE A REPLY WITHIN 45 DAYS, CONTACT: Defense Quality and Standardization Office 5203 Leesburg Pike, Suite 1403, Falls Church, VA 22041-3466 Telephone (703) 756-2340 AUTOVON 289-2340	

DD Form 1426, OCT 89 *Previous editions are obsolete.* 198/290

Source: https://assist.dla.mil -- Downloaded: 2016-12-04T18:40Z
Check the source to verify that this is the current version before use.