METRIC

MIL-STD-2042-1A(SH)
29 September 1997
SUPERSEDING
MIL-STD-2042-1(SH)
7 July 1993

# DEPARTMENT OF DEFENSE
# STANDARD PRACTICE

# FIBER OPTIC CABLE TOPOLOGY INSTALLATION STANDARD METHODS FOR NAVAL SHIPS (CABLES)

(PART 1 OF 6 PARTS)

AMSC N/A

AREA GDRQ

Source: https://assist.dla.mil -- Downloaded: 2016-12-10T07:47Z
Check the source to verify that this is the current version before use.

## FOREWORD

1. This Department of Defense Standard Practice is approved for use by the Naval Sea Systems Command, Department of the Navy, and is available for use by all Departments and Agencies of the Department of Defense.

2. Beneficial comments (recommendations, additions, deletions) and any pertinent data which may be of use in improving this document should be addressed to: Commander, Naval Sea Systems Command, SEA 03K12, 2531 Jefferson Davis Highway, Arlington, VA 22242-5160 by using the self-addressed Standardization Document Improvement Proposal (DD Form 1426) appearing at the end of this document or by letter.

3. This standard practice provides detailed information and guidance to personnel concerned with the installation of fiber optic cable topologies (fiber optic cabling and associated components) on Naval surface ships and submarines. The methods specified herein are not identifiable to any specific ship class or type, but are intended to standardize and minimize variations in installation methods to enhance the compatibility of the installations on all Naval ships.

4. In order to provide flexibility in the use and update of the installation methods, this standard practice is issued in seven parts; the basic standard practice and six numbered parts as follows:

Part 1 Cables
Part 2 Equipment
Part 3 Cable Penetrations
Part 4 Cableways
Part 5 Connectors and Interconnections
Part 6 Tests



Source: https://assist.dla.mil -- Downloaded: 2016-12-10T07:47Z
Check the source to verify that this is the current version before use.

**CONTENTS**


| PARAGRAPH | | PAGE |
|---|---|---|
| 1. | SCOPE | 1 |
| 1.1 | Purpose | 1 |
| 1.1.1 | Applicability | 1 |
| 2. | APPLICABLE DOCUMENTS | 2 |
| 2.1 | General | 2 |
| 2.2 | Government documents | 2 |
| 2.2.1 | Specifications, standards and handbooks | 2 |
| 2.3 | Non-Government publications | 3 |
| 2.4 | Order of precedence | 3 |
| 3. | DEFINITIONS | 4 |
| 3.1 | General fiber optics terms | 4 |
| 3.2 | Allocated and not used fiber | 4 |
| 3.3 | Allocated and used fiber | 4 |
| 3.4 | Alternate channel | 4 |
| 3.5 | Authorized approval | 4 |
| 3.6 | Cable repair | 4 |
| 3.7 | Cable splicing | 4 |
| 3.8 | End user equipment | 4 |
| 3.9 | Fiber optic cable plant | 4 |
| 3.10 | Fiber optic cable topology | 4 |
| 3.11 | Installing activity | 4 |
| 3.12 | Local cable | 4 |
| 3.13 | Minimum bend diameter | 4 |
| 3.14 | Non-redundant channel (NRC) | 4 |
| 3.15 | Normal channel | 4 |
| 3.16 | Optical fiber cable component (OFCC) | 4 |
| 3.17 | Outlet | 4 |
| 3.18 | Spare fiber | 4 |
| 3.19 | System specific cables | 4 |
| 3.20 | Trunk cable | 4 |
| 3.21 | Unallocated fiber | 5 |
| 3.22 | Unused fiber | 5 |
| 4. | GENERAL REQUIREMENTS | 6 |
| 4.1 | Cables | 6 |
| 4.1.1 | Cable selection | 6 |
| 4.1.2 | Spare optical fibers | 6 |
| 4.1.3 | Cable storage and handling | 6 |
| 4.1.3.1 | Cable storage | 6 |
| 4.1.3.2 | Cable handling | 6 |
| 4.1.4 | Cables entering interconnection boxes or other equipment | 6 |
| 4.1.5 | Cable penetrations | 6 |
| 4.1.6 | Cable installation and protection | 6 |
| 4.1.7 | Cable connections | 6 |
| 4.1.7.1 | Termination of fibers | 6 |
| 4.1.7.1.1 | Allocated and used fibers | 7 |
| 4.1.7.1.2 | Allocated and not used fibers | 7 |
| 4.1.7.1.3 | Unallocated fibers | 7 |
| 4.1.7.1.4 | Unused fibers | 7 |
| 4.1.8 | Cable testing | 7 |
| 4.1.9 | Cable and fiber marking | 7 |
| 4.1.9.1 | Fiber identification markers | 7 |
| 4.1.9.2 | Heavy duty connector designation tag | 7 |
| 4.1.10 | Cable repair | 7 |
| 4.2 | Safety precautions | 7 |
| 5. | DETAILED REQUIREMENTS | 9 |
| 5.1 | Cable end sealing | 9 |
| 5.2 | Cable repair | 9 |
| 6. | NOTES | 10 |
| 6.1 | Intended use | 10 |
| 6.2 | Issue of DODISS | 10 |
| 6.3 | Standard method designation | 10 |
| 6.4 | Subject term (key word) listing | 10 |




Source: https://assist.dla.mil -- Downloaded: 2016-12-10T07:47Z
Check the source to verify that this is the current version before use.

**CONTENTS**


| METHOD | | PAGE |
|---|---|---|
| 1A1 | CABLE END SEALING | 1A1-1 |
| 1B1 | CABLE JACKET REPAIR | 1B1-1 |
| **TABLE** | | |
| 1A1-I | Equipment and materials | 1A1-1 |
| 1A1-II | End cap data and sizes for fiber optic cable | 1A1-1 |
| 1B1-I | Equipment and materials | 1B1-1 |
| 1B1-II | Repair sleeve dimensions (wraparound) | 1B1-2 |
| 1B1-III | Equipment and materials | 1B1-5 |
| 1B1-IV | Repair sleeve dimensions (tube) | 1B1-6 |
| 1B1-V | Equipment and materials | 1B1-8 |
| 1B1-VI | Equipment and materials | 1B1-10 |
| 1B1-VII | Repair sleeve dimensions (wraparound) | 1B1-11 |
| **FIGURE** | | |
| 1A1-1 | Installing expanded end cap on cable | 1A1-2 |
| 1A1-2 | Completed end seal | 1A1-2 |
| 1B1-1 | Damaged cable | 1B1-2 |
| 1B1-2 | Cable preparation | 1B1-2 |
| 1B1-3 | Tape contoured to cable | 1B1-3 |
| 1B1-4 | Installing sleeve | 1B1-3 |
| 1B1-5 | Assembled sleeve | 1B1-4 |
| 1B1-6 | Shrinking sleeve | 1B1-4 |
| 1B1-7 | Trimming rails and metal channel | 1B1-5 |
| 1B1-8 | Damaged cable | 1B1-6 |
| 1B1-9 | Cable preparation | 1B1-6 |
| 1B1-10 | Tape contoured to cable | 1B1-7 |
| 1B1-11 | Shrinking sleeve | 1B1-7 |
| 1B1-12 | Completed repair | 1B1-8 |
| 1B1-13 | Damaged cable | 1B1-9 |
| 1B1-14 | Cable preparation | 1B1-9 |
| 1B1-15 | Tape contoured to cable | 1B1-10 |
| 1B1-16 | Damaged cable | 1B1-11 |
| 1B1-17 | Cable preparation | 1B1-11 |
| 1B1-18 | Tape contoured to cable | 1B1-12 |
| 1B1-19 | Assembled sleeve | 1B1-12 |
| 1B1-20 | Shrinking sleeve | 1B1-13 |
| 1B1-21 | Completed repair | 1B1-13 |




Source: https://assist.dla.mil -- Downloaded: 2016-12-10T07:47Z
Check the source to verify that this is the current version before use.

# 1. SCOPE

**1.1 Purpose. This standard provides detailed methods for fiber optic cable selection, handling, marking, and repair.**

**1.1.1 Applicability. These criteria apply to installations on specific ships when invoked by the governing ship specification or other contractual document. They are intended primarily for new construction; however, they are also applicable for conversion or alteration of existing ships. The rapidly changing state of the art in fiber optic technology makes it essential that some degree of flexibility be exercised in enforcing this document. Where there is a conflict between this document and the ship specification or contract, the ship specification or contract shall take precedence. Where ship design is such that the methods herein cannot be implemented, users shall submit new methods or modifications of existing methods to NAVSEA 03K12 for approval prior to implementation.**



Source: https://assist.dla.mil -- Downloaded: 2016-12-10T07:47Z
Check the source to verify that this is the current version before use.

## 2. APPLICABLE DOCUMENTS

2.1 General. The documents listed in this section are specified in sections 3, 4 and 5 of this standard. This section does not include documents cited in other sections of this standards or recommended for additional information or as examples. While every effort has been made to ensure the completeness of this list, document users are cautioned that they must meet all specified requirements documents cited in sections 3, 4 and 5 of this standard, whether or not they are listed.

2.2 Government documents.

2.2.1 Specifications, standards and handbooks. The following specifications, standards, and handbooks form a part of this document to the extent specified herein. Unless otherwise specified, the issues of these documents are those listed in the issue of the Department of Defense Index of Specifications and Standards (DODISS) and supplement thereto, cited in the solicitation (see 6.2).

DEPARTMENT OF DEFENSE SPECIFICATIONS

| | | |
|---|---|---|
| MIL-A-2877 | - | Aluminum Alloy Tape. |
| MIL-I-23053/15 | - | Insulation Sleeving, Electrical, Heat Shrinkable, Polyolefin, Heavy-Wall, Coated, Flexible, Outer Wall Crosslinked. |
| MIL-S-24623 | - | Splice, Fiber Optic Cable, General Specification for (Metric). |
| MIL-C-28876 | - | Connectors, Fiber Optic, Circular, Plug and Receptacle Style, Multiple Removable Termini, General Specification for. |
| MIL-F-49291 | - | Fiber, Optical, (Metric) General Specification for. |
| MIL-I-81765/1 | - | Insulating Components, Molded, Electrical, Heat Shrinkable, Polyolefin, Crosslinked, Semi-rigid and Flexible. |
| MIL-C-83522 | - | Connectors, Fiber Optic, Fixed Single Terminus, General Specification for. |
| MIL-C-85045 | - | Cables, Fiber Optic,(Metric) General Specification for. |

DEPARTMENT OF DEFENSE STANDARDS

| | | |
|---|---|---|
| MIL-STD-2042-2 | - | Fiber Optic Cable Topology Installation, Standard Methods for Naval Ships (Equipment)(Part 2 of 6 Parts). |
| MIL-STD-2042-3 | - | Fiber Optic Cable Topology Installation, Standard Methods for Naval Ships (Cable Penetrations)(Part 3 of 6 Parts). |
| MIL-STD-2042-4 | - | Fiber Optic Cable Topology Installation, Standard Methods for Naval Ships (Cableways)(Part 4 of 6 Parts). |
| MIL-STD-2042-5 | - | Fiber Optic Cable Topology Installation, Standard Methods for Naval Ships (Connectors and Interconnections)(Part 5 of 6 Parts). |
| MIL-STD-2042-6 | - | Fiber Optic Cable Topology Installation, Standard Methods for Naval Ships (Tests)(Part 6 of 6 Parts). |
| MIL-STD-2189 | - | Design Methods For Naval Shipboard Systems. |
| Section 305-1 | - | Designation and Marking of Electrical System. |

(Unless otherwise indicated, copies of the above specifications, standards, and handbooks are available from the Standardization Documents Order Desk, 700 Robbins Ave, Building 4D, Philadelphia, PA, 19111-5094.)



Source: https://assist.dla.mil -- Downloaded: 2016-12-10T07:47Z
Check the source to verify that this is the current version before use.

**2.3 Non-Government publications. The following documents form a part of this document to the extent specified herein. Unless otherwise specified, the issues of the documents which are DoD adopted are those listed in the issue of the DODISS cited in the solicitation. Unless otherwise specified, the issues of documents not listed in the DODISS are the issues of the documents cited in the solicitation (see 6.2).**

**AMERICAN NATIONAL STANDARDS INSTITUTE (ANSI)**

**ANSI Z136.2 - Safe Use of Optical Fiber Communication Systems Utilizing Laser Diode and LED Sources**

**(Application for copies should be addressed to the American National Standards Institute, 1430 Broadway, New York, NY 10018-3308.)**

**ELECTRONICS INDUSTRY ASSOCIATION/TELECOMMUNICATIONS INDUSTRY ASSOCIATION**

**EIA/TIA-440 - Fiber Optic Terminology.**

**(Application for copies should be addressed to Global Engineering Documents, 1990 M Street NW, Suite 400, Washington, DC 20036.)**

**2.4 Order of precedence. In the event of a conflict between the text of this document and the references cited herein, the text of this document takes precedence. Nothing in this document, however, supersedes applicable laws and regulations unless a specific exemption has been obtained.**



Source: https://assist.dla.mil -- Downloaded: 2016-12-10T07:47Z
Check the source to verify that this is the current version before use.

## 3. DEFINITIONS

3.1 General fiber optics terms. Definitions for general fiber optics terms used in this standard are in accordance with EIA/TIA-440. Definitions for other terms as they are used in this standard are given in the following paragraphs.

3.2 Allocated and not used fiber. An allocated and not used fiber is a fiber that is designated for use for a particular system, but is not being used to transmit information. Allocated and not used fibers include fibers allocated as system spare fibers, system growth fibers, and system redundant fibers.

3.3 Allocated and used fiber. An allocated and used fiber is a fiber that is designated and required for use for a particular system, and is being used to transmit information. Allocated and used fibers include fibers used for normal channels, fibers for alternate channels, and fibers for non redundant channels.

3.4 Alternate channel. An alternate channel is the allocated and used active backup link for a normal channel.

3.5 Authorized approval. Authorized approval is written approval from the cognizant Government activity.

3.6 Cable repair. Cable repair refers to restoration of only the outermost cable jacket.

3.7 Cable splicing. Cable splicing, as used in this standard, refers to the repair of damaged fiber optic cables by reconnecting severed fibers and providing an environmental enclosure at the spliced region.

3.8 End user equipment. End user equipment refers to any cabinet, case, panel, or device that contains components that are either the origin or destination of an optical signal.

3.9 Fiber optic cable plant. The fiber optic cable plant is the portion of the fiber optic topology made up of the trunk cables and interconnection boxes.

3.10 Fiber optic cable topology. The fiber optic cable topology consists of fiber optic interconnection boxes, outlets, trunk and local cables and the connectors and splices used to interconnect the trunk and local cables.

3.11 Installing activity. An installing activity is any military or commercial organization involved with the installation of fiber optic cable topologies aboard Naval ships.

3.12 Local cable. A local cable is a fiber optic cable that provides a continuous optical path between an interconnection box (or outlet) and an end user equipment, or between an interconnection box and an outlet, and is typically not run through the main cableways.

3.13 Minimum bend diameter. The minimum bend diameter of a fiber optic cable (and OFCC, see 3.20) is the diameter at which the cable can be bent without degrading optical performance. The short term bend diameter applies during handling and installing; the long term bend diameter applies to the completed installation.

3.14 Non redundant channel (NRC). A non redundant channel is any allocated and used active link that has no system required backup link.

3.15 Normal channel. A normal channel is an allocated and used active link between system equipment that has a designated active backup link.

3.16 Optical fiber cable component (OFCC). An OFCC is a buffered fiber augmented with a concentric layer of strength members and an overall jacket.

3.17 Outlet. An outlet is a small termination box used to break out a local cable from an interconnection box to one or more equipments within a compartment or area.

3.18 Spare fiber. A fiber that is not allocated for use by any system, but is reserved for use as a maintenance spare in the case of damage to an allocated fiber within the cable. A system spare fiber is an allocated and not used fiber designated for a particular system.

3.19 System specific cables. System specific cables are those fiber optic cables that connect end user equipments and do not interface with a fiber optic cable plant (see 3.19).

3.20 Trunk cable. A trunk cable is a fiber optic cable that provides a continuous optical path between interconnection boxes. Typically, trunk cables are run in the main cableways and have higher fiber counts per cable than local cables.



Source: https://assist.dla.mil -- Downloaded: 2016-12-10T07:47Z
Check the source to verify that this is the current version before use.

**3.21 Unallocated fiber. An unallocated fiber is a fiber that is not designated for use for any system, but is required as part of the cabling. Unallocated fibers include spare fibers and growth fibers.**

**3.22 Unused fiber. An unused fiber is a fiber that is not designated for use for any system and not required as part of the cabling. Unused fibers occur within the fiber optic cable topology when the required systems fibers are less than the number of fibers available within a standard cable size.**



Source: https://assist.dla.mil -- Downloaded: 2016-12-10T07:47Z
Check the source to verify that this is the current version before use.

## 4. GENERAL REQUIREMENTS

4.1 Cables. Fiber optic cables for Naval shipboard application shall be in accordance with MIL-C-85045.

4.1.1 Cable selection. Cables selected shall be those referenced in ship specifications, ship installation drawings, contract drawings, or other approved drawings as specified in the contract or by the cognizant Government activity. Substitute cables shall not be used without authorized approval (see 3.5). In those instances where the installing activity (see 3.11) is responsible for determining the correct type and size cable for a specific application, the fiber optic cables shall be selected in accordance with MIL-C-85045. Fibers shall be in accordance with MIL-F-49291, either type SU (single mode) or type MM (multimode) as required by the system.

4.1.2 Spare optical fibers. The number of spare optical fibers shall be in accordance with the ship specification and system drawings. Spare fibers are located in both trunk cables and local cables which penetrate bulkheads or decks (see 3.12 and 3.20).

4.1.3 Cable storage and handling.

4.1.3.1 Cable storage. Cables shall be stored in a dry place protected from the weather and limited to a temperature range of not less than -40 degrees Celsius (°C) [-40 degrees Fahrenheit (°F)] nor greater than +70°C (+158°F). A cable that has been in storage for less than one year may be installed if a visual inspection of the cable shows no mechanical damage that would impair the watertight integrity of the cable's outer sheath or the integrity of the optical fiber cable components (OFCC's). A cable that has been in storage for one year or longer may be installed if it passes the visual inspection in accordance with Method 6A1 in Part 6 of this standard practice, and if the attenuation measured in accordance with Method 6B1 in Part 6 of this standard practice is less than the value specified. Cables shall be stored on reels with minimum diameters of 24 times the cable outside diameter or coiled so that the bend diameter shall be not less than 24 times the cable outside diameter. Bare ends of stored cables shall be sealed against moisture using heat shrink end caps as specified herein (see 5.1). Terminated cables shall be sealed against moisture using connector dust covers (for multiple terminus connectors), plastic caps or heat shrink end caps as specified herein (see 5.1).

4.1.3.2 Cable handling. During handling, the cable shall be protected from crushing, kinks, twists, and bends that violate the minimum short term bend diameter of eight times the cable outside diameter (see 3.13). Additional caution shall be used when handling cables in ambient temperatures at or below 36°F (2°C) (see Part 4 of this standard practice).

4.1.4 Cables entering interconnection boxes or other equipment. Cables shall enter interconnection boxes or other equipment in accordance with the methods in Part 2 of this standard practice.

4.1.5 Cable penetrations. The passing of cables through decks and bulkheads shall be in accordance with the methods in Part 3 of this standard practice.

4.1.6 Cable installation and protection. Fiber optic cables shall be installed in the cableways and protected in accordance with Part 4 of this standard practice.

4.1.7 Cable connections. Cable connections to equipment external to the fiber optic cable topology, such as end user equipment (see 3.8), shall be made with multiple terminus heavy duty connectors in accordance with MIL-C-28876, or single terminus light duty connectors in accordance with MIL-C-83522, or splices in accordance with MIL-S-24623 as specified in Part 5 of this standard practice. Light duty connectors and splices used for external equipment connections shall be housed within that equipment. Light duty connectors and splices used for cable interconnections internal to the fiber optic cable topology shall be housed within interconnection boxes, as specified in Part 2 of this standard practice.

4.1.7.1 Termination of fibers. There are four categories of fibers:

a. Allocated and used (see 3.3).

b. Allocated and not used (see 3.2)

c. Unallocated (see 3.21).

d. Unused (see 3.22).

The quantity of the first three categories shall be as specified in the ship specification and on the system drawings.



Source: https://assist.dla.mil -- Downloaded: 2016-12-10T07:47Z
Check the source to verify that this is the current version before use.

4.1.7.1.1 Allocated and used fibers. The allocated and used trunk and local cable fibers are normal channel fibers (see 3.15), alternate channel fibers (see 3.4), and non-redundant channel (NRC) fibers (see 3.14). These fibers shall be terminated in accordance with the system drawings.

4.1.7.1.2 Allocated and not used fibers. The allocated and not used fibers are system required spares and system required redundant fibers. These fibers shall be terminated in accordance with the system or fiber optic cable topology drawings. If there are no system requirements, either the splice or single terminus connector may be installed as required to meet the system link loss budget.

4.1.7.1.3 Unallocated fibers. The unallocated trunk cable fibers are fiber optic cable topology maintenance spare fibers and growth fibers for unidentified future systems. Only those local cables that penetrate decks and bulkheads will contain unallocated fibers. Spare fibers shall be terminated in accordance with the system or fiber optic cable topology drawings. Growth fibers shall not be terminated unless otherwise specified in the fiber optic cable topology drawings.

4.1.7.1.4 Unused fibers. The unused fibers shall not be terminated unless otherwise specified in the fiber optic cable topology drawings.

4.1.8 Cable testing. Cables shall undergo testing before, during, and after installation in accordance with Part 6 of this standard practice.

4.1.9 Cable and fiber marking. All cables shall be marked in accordance with the ship specification and system drawings and as specified herein. Cable identification tags external to the equipment shall be in accordance with MIL-STD-2189/305 and shall be located as specified in Part 4 of this standard practice. Cable tags shall be of a size suitable to accommodate the required marking but shall have a minimum width of 13 mm (1/2 inch). Tags and strips for marking cables shall be of soft aluminum tape having a natural finish in accordance with MIL-A-2877. Capital letters shall be used on cable tags; height of all letters shall be not less than 5 mm (3/16 inch), and letters and numbers shall be embossed to at least 0.4 mm (1/64 inch) above the surface.

4.1.9.1 Fiber identification markers. Heat shrink tubing marked with the fiber identification specified in the ship specification and system drawings shall be used to identify OFCC's or buffered fibers at their termination point within the interconnection box. The identification markers shall always be installed with the left hand marking group next to the termination point. The sleeve shall be positioned so that it can be easily read without disturbing other components within the equipment. Heat shrink tubing shall be white.

4.1.9.2 Heavy duty connector designation tag. Cables that terminate in a heavy duty connector shall have a tag placed on the cable next to the connector designating the jack to which the connector is to be attached.

4.1.10 Cable repair (see 3.6). Damage to the outermost fiber optic cable jacket shall be repaired according to procedures specified herein (see 5.2). Cable with damage extending beyond the cable outer jacket to the kevlar strength members or to the OFCC outer jacket shall be replaced.

4.2 Safety precautions. The following safety precautions apply:

a. Observe all written safety precautions given in the methods of this standard practice.

b. Observe all warning signs on equipment and materials.

c. The classification of a laser is based on the ability of the optical beam to cause damage to the eye. Under normal operating conditions, an optical fiber communication system (OFCS) is inherently an eye safe system; but, when an optical fiber connection is broken and optical viewing instruments are used, it is possible that hazardous energy can enter the eye. For this reason four service group hazard classes have been devised to indicate the degree of hazard and required hazard control measures. Refer to ANSI Z136.2 for a full technical definition. The following laser safety precautions shall apply:

(1) Ensure personnel are familiar with the laser degree of hazard and the required control measures.

(2) Light generated by light emitting diodes (LED's) and laser diodes may not be visible but may still be hazardous to the unprotected eye. Never stare into the end of an optical fiber connected to an LED or laser diode and do not stare into broken, severed or disconnected optical cables.



Source: https://assist.dla.mil -- Downloaded: 2016-12-10T07:47Z
Check the source to verify that this is the current version before use.

**(3) Do not view the primary beam or a specular reflection from an OFCS with an optical microscope, eye loupe or other viewing instrument. The instrument may create a hazard due to its light gathering capability.**

**d. Safety glasses shall be worn when handling bare fibers. Always handle cable carefully to avoid personal injury. The ends of optical fibers may be extremely sharp and can lacerate or penetrate the skin or cause permanent eye damage if touched. If the fiber penetrates the skin, it most likely will break off, in which case the extraction of the fiber should be performed by trained medical personnel to prevent further complications.**

**e. Wash your hands after handling bare fibers.**



Source: https://assist.dla.mil -- Downloaded: 2016-12-10T07:47Z
Check the source to verify that this is the current version before use.

## 5. DETAILED REQUIREMENTS

**5.1 Cable end sealing. Unterminated cables that are not to be terminated within 48 hours shall have their ends sealed against moisture in accordance with Method 1A1 of this standard practice. OFCC's broken out within equipment (such as in an interconnection box) that are not to be terminated shall be grouped into bundles, with no more than eight OFCCs per bundle, and the bundle end sealed using Method 1A1 of this standard practice as a guide.**

**5.2 Cable repair. Damage to cable outer jackets (see 4.1.10) shall be repaired using cable jacket repair sleeves or tape, in accordance with Method 1B1 of this standard practice.**



Source: https://assist.dla.mil -- Downloaded: 2016-12-10T07:47Z
Check the source to verify that this is the current version before use.

## 6. NOTES

(This section contains information of a general or explanatory nature that may be helpful, but is not mandatory.)

6.1 Intended use. The methods for cable end-sealing and cable repair depicted in this standard practice are intended primarily for new construction; however, they are applicable for conversion or alteration of existing ships.

6.2 Issue of DODISS. When this standard practice is used in acquisition, the applicable issue of DODISS must be cited in the solicitation (see 2.2.1 and 2.3).

6.3 Standard method designation. To simplify the usage of this standard practice, an alpha-numeric designation system was developed to identify and locate a given method. The methods were grouped together by function as follows:

Group A: Cable end sealing
Group B: Cable jacket repair

Then the designation system was completed as follows:

```
1  B  1 - 2
T  T  T   T
*  *  *   *
*  *  *   *
*  *  *   .))))))))  Alternate procedure within method
*  *  .))))))))))))  Method number within group
*  .)))))))))))))))  Functional Group
.))))))))))))))))))  MIL-STD-2042 Part Number
```

Thus, method 1B1-2 identifies the second alternate procedure within method 1 of group B in Part 1 (MIL-STD-2042-1) of MIL-STD-2042.

6.4 Subject term (key word) listing.

Component
Connections
Marking
Penetrations
Repair
Selection
Storage and handling
Testing

Preparing activity:
NAVY - SH
(Project GDRQ-N169-1)



Source: https://assist.dla.mil -- Downloaded: 2016-12-10T07:47Z
Check the source to verify that this is the current version before use.

# METHOD 1A1

## CABLE END SEALING

## 1. SCOPE.

1.1 Scope. This method describes a procedure for fiber optic cable end sealing during temporary and long term storage to prevent water or other liquids from soaking into the cable and damaging the fibers.

## 2. REQUIRED EQUIPMENT AND MATERIALS.

2.1 The equipment and materials in table 1A1-I shall be used to perform this procedure.

TABLE 1A1-I. Equipment and materials.

| Description | Quantity |
|---|---|
| Safety glasses | 1 |
| Ruler | 1 |
| Heat gun (Raychem 500B or equal) | 1 |
| Alcohol bottle with alcohol/2-propanol | 1 |
| End cap (Raychem XFFR-07 series or equal) | 1 |
| Wipes | As required |
| Canned air | As required |

## 3. PROCEDURE.

3.1 Safety Summary. The following safety precautions shall be observed:

a. Safety glasses shall be worn at all times when handling bare fibers.

b. Do not touch the ends of the fiber as they may be razor sharp. Wash your hands after handling bare fiber.

c. Observe warnings and cautions on the equipment and materials.

d. Never stare into the end of a fiber connected to a laser source or LED.

3.2 Procedure.

NOTE: End caps shall meet the requirements of MIL-I-81765/1 and table 1A1-II. The tube interior shall be coated with a heat activated adhesive.

Step 1 - Clean the end of cable with a wipe dampened with alcohol and blow dry as necessary.

Step 2 - Select an end cap in accordance with table 1A1-II.

TABLE 1A1-II. End cap data and sizes for fiber optic cable.

| Cable type | Cable O.D. mm (inches) nominal | End cap dimensions mm (inches) | | |
|---|---|---|---|---|
| | | Length (min) | Expanded I.D.(min) | Recovered I.D.(max) |
| 4-Fiber | 8.1 (0.32) | 33.5 (1.32) | 8.9 (0.35) | 4.6 (0.18) |
| 8-Fiber | 11.1 (0.44) | 69 (2.7) | 20.6 (0.81) | 9.4 (0.37) |
| 36-Fiber | 20.8 (0.82) | 76 (3.0) | 26.7 (1.05) | 12.7 (0.50) |



Source: https://assist.dla.mil -- Downloaded: 2016-12-10T07:47Z
Check the source to verify that this is the current version before use.

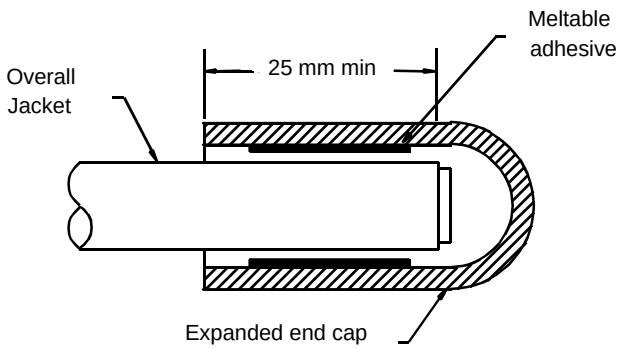


**FIGURE 1A1-1. Installing expanded end cap on cable.**

**Step 3 - Slide the end cap over the end of the cable to be sealed. Position the end cap to ensure a 25 mm (1 inch) minimum overlap (see figure 1A1-1).**

**Step 4 - CAUTION: Do not overheat the cable. Prolonged exposure of the jacket to temperatures above 160°C (320°F) may damage the cable jacket. Discontinue heating of the sleeve and allow the cable jacket to cool before reheating if the cable jacket shows any signs of bubbling.**

**Hold the heat gun approximately 102 mm (4 inches) from the end cap and as heat is applied, move the heat gun back and forth over the end cap. Shrink the end cap from closed end to open end to avoid trapping air. (NOTE: Minimum recovery temperature is 121°C (250°F).**

**Step 5 - When the end cap has recovered enough to assume the configuration of the cable and excess adhesive appears at the end of the cap, discontinue heating (see figure 1A1-2). (NOTE: Additional heat will not make end cap shrink more tightly.)**

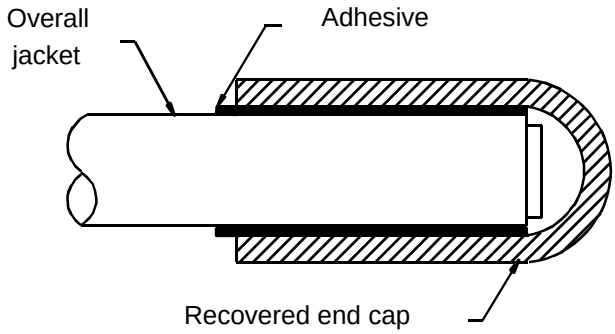


**FIGURE 1A1-2. Completed end seal.**



Source: https://assist.dla.mil -- Downloaded: 2016-12-10T07:47Z
Check the source to verify that this is the current version before use.

# METHOD 1B1

## CABLE JACKET REPAIR

1. SCOPE.

1.1 Scope. This method describes procedures for repairing the damaged outer jacket of a cable with kevlar strength members intact.

2. REQUIRED EQUIPMENT AND MATERIALS.

2.1 The equipment and materials in the tables located in the applicable sections of this method shall be used to perform these procedures.

3. PROCEDURES.

3.1 Safety summary. The following safety precautions shall be observed:

a. Safety glasses shall be worn when handling bare fibers.

b. Do not touch the ends of the fiber as they may be razor sharp. Wash your hands after handling bare fiber.

c. Observe warnings and cautions on equipment and materials.

d. Never stare into the end of a fiber connected to a laser source or LED.

3.2 Procedure I. Method 1B1-1. Wraparound sleeve with rail closure.

3.2.1 The equipment and materials in table 1B1-I shall be used to perform this procedure.

TABLE 1B1-I. Equipment and materials.

| Description | Quantity |
|---|---|
| Safety glasses | 1 |
| Ruler | 1 |
| Electricians knife | 1 |
| Emery cloth (or fine file) | As required |
| Adhesive and sealant tape (Raychem Thermofit S1030 or equal) | As required |
| Repair sleeve | 1 |
| Heat gun (Raychem 500B or equal) | 1 |
| Alcohol bottle with alcohol/2-propanol | 1 |
| Wipes | As required |
| Canned air (or compressed air) | As required |

NOTE: The cable jacket repair sleeve material shall meet the requirements of MIL-I-23053/15 and table 1B1-II. The material shall be coated with a heat-activated adhesive and fabricated into a wrap around sleeve with a rail closure system as shown on the figures below.

Step 1 - Select a repair sleeve in accordance with table 1B1-II.

Step 2 - Trim off the frayed, burned, or protruding jacket material with a knife using care not to damage the kevlar or OFCC jacket (see figure 1B1-1). Square up the jacketing where required.



Source: https://assist.dla.mil -- Downloaded: 2016-12-10T07:47Z
Check the source to verify that this is the current version before use.

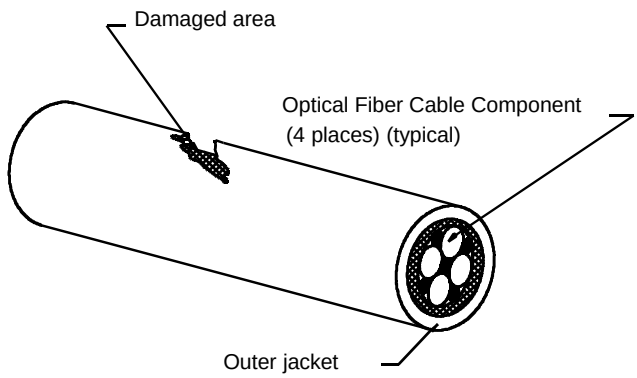


FIGURE 1B1-1. Damaged cable.

TABLE 1B1-II. Repair sleeve dimensions (wraparound).

| Cable type | Cable O.D. nominal mm (inches) | B dimension mm (inches) | Repair sleeve dimensions mm (inches) | | | |
|---|---|---|---|---|---|---|
| | | | Length (minimum) | Rail to rail | | Wall thickness after shrinking (+/- 10%) |
| | | | | Expanded (minimum) | Recovered (maximum) | |
| 4-fiber | 8.1 (.32) | 76 (3.0) | A + 2B | 45.7 (1.8) | 23.9 (.94) | 2.0 (0.08) |
| 8-fiber | 11.1 (.44) | 76 (3.0) | A + 2B | 45.7 (1.8) | 23.9 (.94) | 2.0 (0.08) |
| 36-fiber | 20.8 (.82) | 76 (3.0) | A + 2B | 79.8 (3.14) | 48.5 (1.91) | 2.0 (0.08) |

NOTE: Refer to figure 1B1-2 for a definition of A and B dimensions.

Step 3 - Abrade the jacket circumferentially to the dimension shown using emery cloth or a fine file (see table 1B1-II and figure 1B1-2).

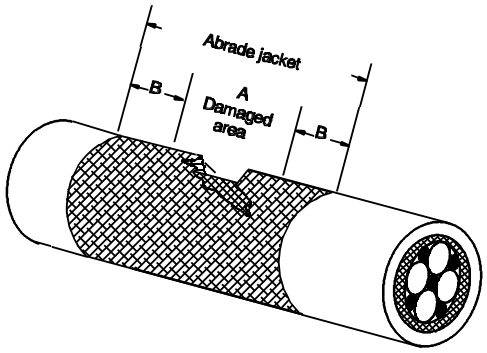


FIGURE 1B1-2. Cable preparation.

Step 4 - Clean the abraded area with a wipe dampened with alcohol, and blow dry with air.

Step 5 - Fill any large depressions or voids with tape, as required, to restore the cable contour as follows:

WARNING: Application of too much heat will cause the adhesive to flow and may cause burns if it comes in contact with the skin.



Source: https://assist.dla.mil -- Downloaded: 2016-12-10T07:47Z
Check the source to verify that this is the current version before use.

Cut off short strips of the adhesive tape and heat them slightly with the heat gun to soften them. Roll the tape with your fingers and press it into the damaged area. Repeat the process until the damaged area is filled, then, holding the heat gun approximately 102 mm (4 inches) away, apply just enough heat to the tape to form and contour the tape to the cable (see figure 1B1-3).

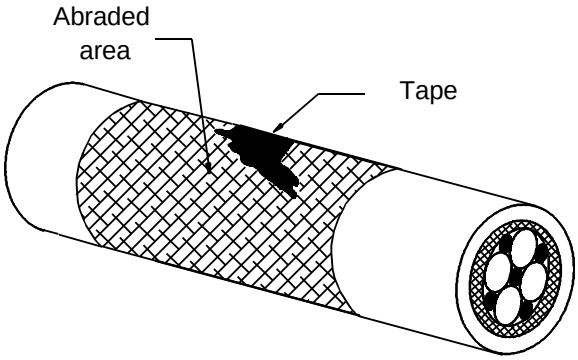


FIGURE 1B1-3. Tape contoured to cable.

Step 6 - Cut the cable jacket repair sleeve to the proper length (see table 1B1-II).

Step 7 - CAUTION: Do not overheat the cable. The jacket should be just warm to the touch. Prolonged exposure of the jacket to temperatures above 160°C (320°F) may damage the cable jacket.

Hold the heat gun approximately 102 mm (4 inches) away from the cable and apply heat to all parts of the cable jacket to which the repair sleeve is to be applied.

Step 8 - Assemble the repair sleeve as shown (see figure 1B1-4). Leave approximately 13 mm (0.5 inch) overhang of channel on both sides of sleeve (see figure 1B1-5).

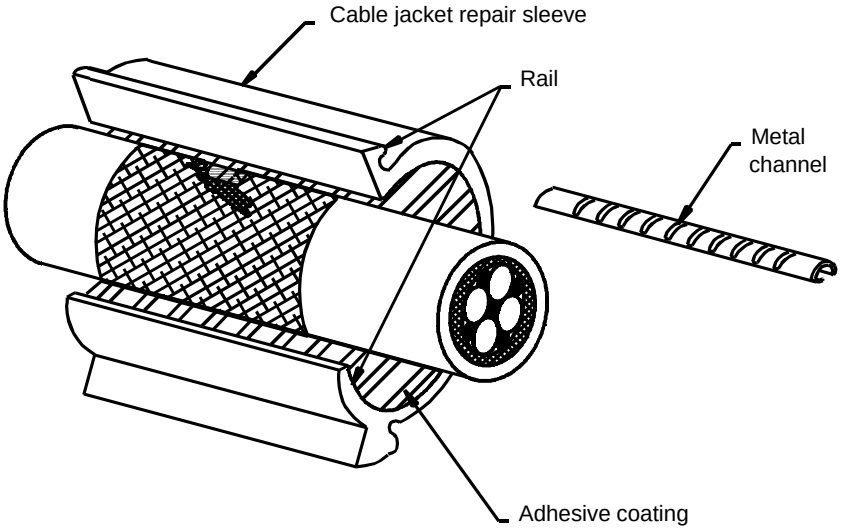


FIGURE 1B1-4. Installing sleeve.



Source: https://assist.dla.mil -- Downloaded: 2016-12-10T07:47Z
Check the source to verify that this is the current version before use.

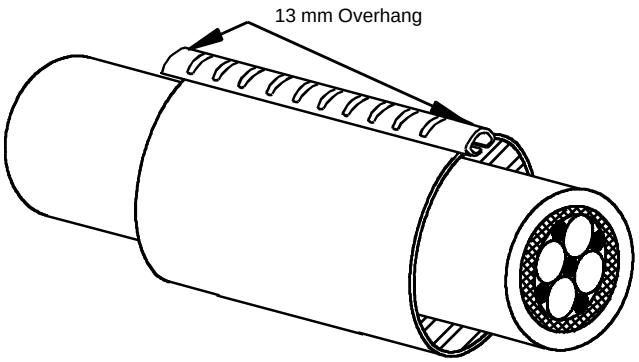


**FIGURE 1B1-5. Assembled sleeve.**

**Step 9 - CAUTION: Do not overheat the cable. Prolonged exposure of the jacket to temperatures above 160°C (320°F) may damage the cable jacket. Discontinue heating of the sleeve and allow the cable jacket to cool before reheating if the cable jacket shows any signs of bubbling.**

**Center the sleeve over the damaged area and, holding the heat gun approximately 102 mm (4 inches) away, heat evenly from the center to the ends around the entire sleeve until the sleeve changes color indicating a full recovery (see figure 1B1-6). Melted sealant should be visible at the end of sleeve.**

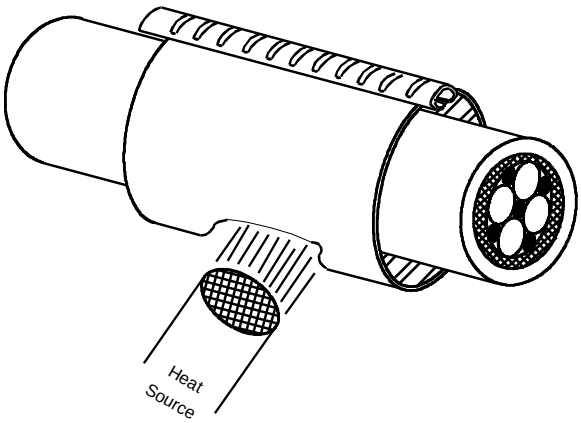


**FIGURE 1B1-6. Shrinking sleeve.**

**Step 10 - When the sleeve has cooled, the rail and metal channel may be trimmed from the sleeve to provide greater flexibility to the cable (see figure 1B1-7).**



Source: https://assist.dla.mil -- Downloaded: 2016-12-10T07:47Z
Check the source to verify that this is the current version before use.

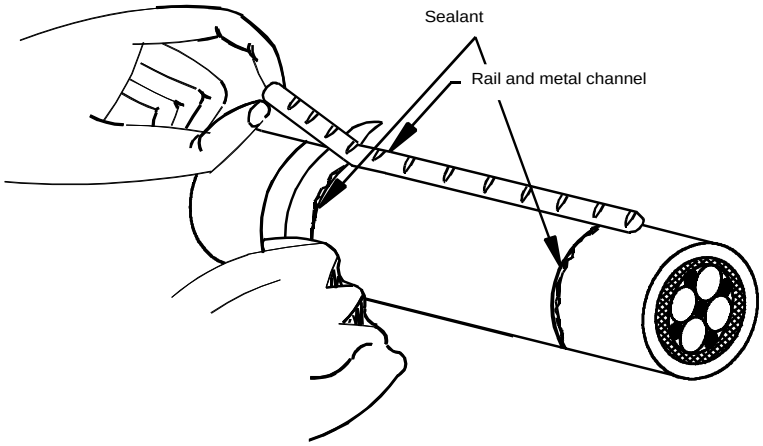


FIGURE 1B1-7. Trimming rails and metal channel.

3.3 Procedure II. Method 1B1-2 tube sleeve.

3.3.1 The equipment and materials in table 1B1-III shall be used to perform this procedure.

TABLE 1B1-III. Equipment and materials.

| Description | Quantity |
|---|---|
| Safety glasses | 1 |
| Ruler | 1 |
| Electricians knife | 1 |
| Emery cloth (or fine file) | As required |
| Repair sleeve (Raychem CRSM-1-1200 or equal) | 1 |
| Adhesive and sealant tape (Raychem Thermofit S1030 or equal) | As required |
| Heat gun (Raychem 500B or equal) | 1 |
| Alcohol bottle with alcohol/2-propanol | 1 |
| Wipes | As required |
| Canned air (or compressed air) | As required |

NOTE: The cable repair sleeve material shall meet the requirements of MIL-I-23053/15 and table 1B1-IV. The material shall be coated with a heat activated adhesive and fabricated into a tube shape as shown on the figures below.

Step 1 - Select a repair sleeve in accordance with table 1B1-IV.

Step 2 - Trim off the frayed, burned, or protruding jacket material with a knife using care not to damage the kevlar or OFCC jacket (see figure 1B1-8). Square up the jacketing where required.



Source: https://assist.dla.mil -- Downloaded: 2016-12-10T07:47Z
Check the source to verify that this is the current version before use.

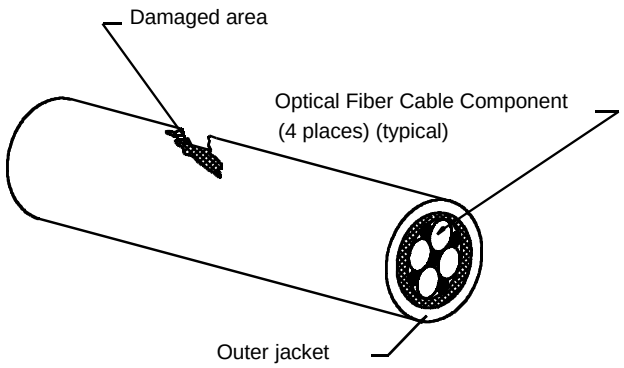


FIGURE 1B1-8. Damaged cable.

TABLE 1B1-IV. Repair sleeve dimensions (tube).

| Cable type | Cable O.D. mm (inches) nominal | B Dimension mm (inches) | Repair sleeve dimensions mm (inches) | | | |
|---|---|---|---|---|---|---|
| | | | Length (minimum) | Inside diameter | | Wall thickness after shrinking (+/- 10%) |
| | | | | Expanded (minimum) | Recovered (maximum) | |
| 4-Fiber | 8.1 (.32) | 201 (4.0) | A + 2B | 19.1 (0.75) | 5.6 (0.22) | 3.0 (0.11) |
| 8-Fiber | 11.1 (.44) | 101 (4.0) | A + 2B | 19.1 (0.75) | 5.6 (0.22) | 3.0 (0.11) |
| 36-Fiber | 20.8 (.82) | 101 (4.0) | A + 2B | 28.0 (1.10) | 9.6 (0.38) | 3.0 (.12) |

NOTE: Refer to figure 1B1-9 for a definition of A and B dimensions.

Step 3 - Abrade the jacket circumferentially to the dimension shown using emery cloth or a fine file (see table 1B1-IV and figure 1B1-9).

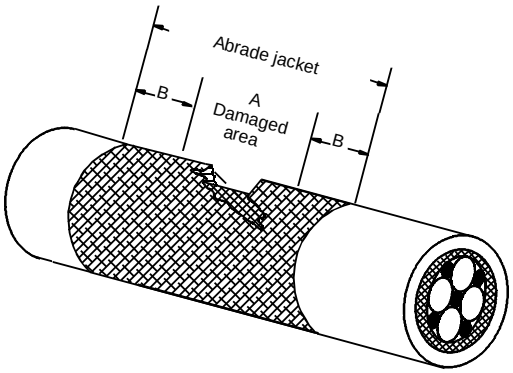


FIGURE 1B1-9. Cable preparation.

Step 4 - Clean the abraded area with alcohol and blow dry with air.

Step 5 - Fill any large depressions or voids with tape, as required, to restore the cable contour as follows:

WARNING: Application of too much heat will cause the adhesive to flow and may cause burns if it comes in contact with the skin.



Source: https://assist.dla.mil -- Downloaded: 2016-12-10T07:47Z
Check the source to verify that this is the current version before use.

Cut off short strips of the adhesive tape and heat them slightly with the heat gun to soften them. Roll the tape with your fingers and press it into the damaged area. Repeat the process until the damaged area is filled, then, holding the heat gun approximately 102 mm (4 inches) away, apply just enough heat to the tape to form and contour to the cable (see figure 1B1-10).

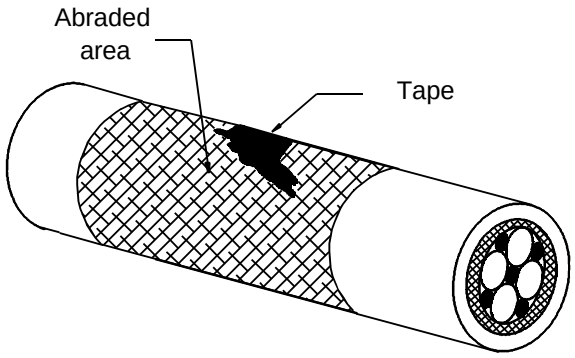


FIGURE 1B1-10. Tape contoured to cable.

Step 6 - Cut the cable jacket repair sleeve to the proper length (see table 1B1-IV.)

Step 7 - CAUTION: Do not overheat the cable. Prolonged exposure of the jacket to temperatures above 160°C (320°F) may damage the cable jacket. Discontinue heating of the sleeve and allow the cable jacket to cool before reheating if the cable jacket shows any signs of bubbling.

Center the repair sleeve over the damaged area. Hold the heat gun approximately 102 mm (4 inches) away and heat the center by applying heat evenly around the sleeve until it shrinks over cable (see figure 1B1-11). Working towards one end, shrink the sleeve to the cable until sealant is flowing at end of the sleeve. Repeat the procedure on the other half of the sleeve (see figure 1B1-12).

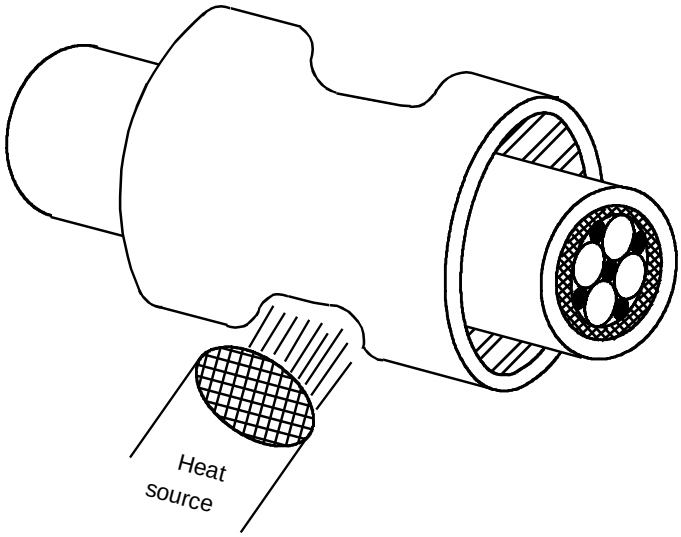


FIGURE 1B1-11. Shrinking the sleeve.



Source: https://assist.dla.mil -- Downloaded: 2016-12-10T07:47Z
Check the source to verify that this is the current version before use.

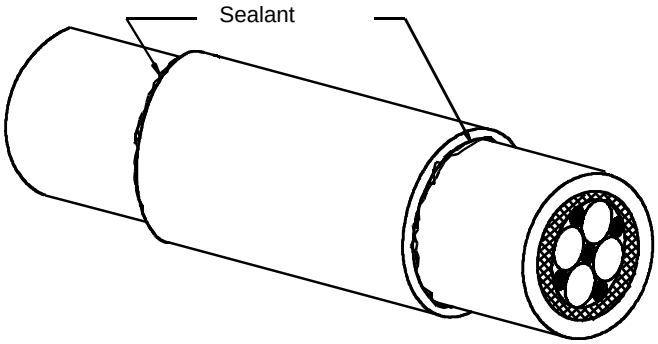


FIGURE 1B1-12. Completed repair.

Step 8 - Remove heat and allow the sleeve to cool.

3.4 Procedure III. Method 1B1-3 rubber tape.

3.4.1 The equipment and materials in table 1B1-V shall be used to perform this procedure.

TABLE 1B1-V. Equipment and materials.

| Description | Quantity |
|---|---|
| Safety glasses | 1 |
| Ruler | 1 |
| Electricians knife | 1 |
| Emery cloth (or fine file) | As required |
| Adhesive and sealant tape (Raychem Thermofit S1030 or equal) | As required |
| Heat gun (Raychem 500B or equal) | 1 |
| Fiberglass tape (1 in.) | As required |
| Electrical coating (3M Scotch Kote or equal) | As required |
| Alcohol bottle with alcohol/2-propanol | 1 |
| Wipes | As required |
| Canned air (or compressed air) | As required |

Step 1 - Trim off any frayed, burned, or protruding jacket material with a knife using care not to damage the kevlar or the OFCC jacket (see figure 1B1-13). Square up the jacketing where required.



Source: https://assist.dla.mil -- Downloaded: 2016-12-10T07:47Z
Check the source to verify that this is the current version before use.

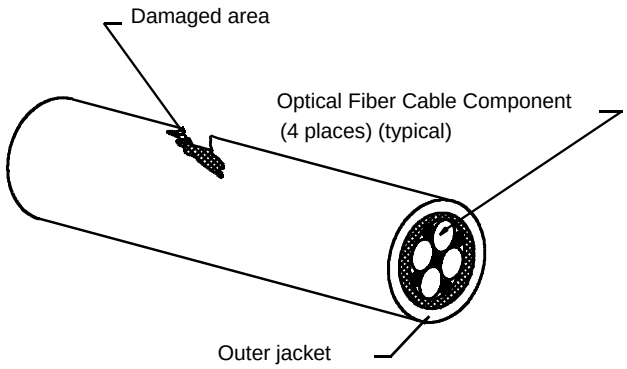


**FIGURE 1B1-13. Damaged cable.**

**Step 2 - Abrade the jacket circumferentially approximately 76 mm (3 inches) on either side of the damaged area using emery cloth or a fine file (see figure 1B1-14).**

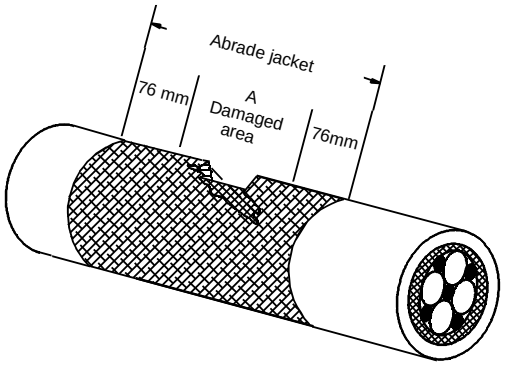


**FIGURE 1B1-14. Cable preparation.**

**Step 3 - Clean the abraded area with alcohol and blow dry with air.**

**Step 4 - Fill any large depressions or voids with adhesive tape as required to restore the cable contour as follows:**

**WARNING: Application of too much heat will cause the adhesive to flow and may cause burns if it comes in contact with the skin.**

**Cut off short strips of adhesive tape and heat them slightly with the heat gun to soften them. Roll the tape with your fingers and press them into the damaged area. Repeat process until the damaged area is filled, then, holding the heat gun approximately 102 mm (4 inches) away, apply just enough heat to the tape to form and contour to the cable (see figure 1B1-15).**



Source: https://assist.dla.mil -- Downloaded: 2016-12-10T07:47Z
Check the source to verify that this is the current version before use.

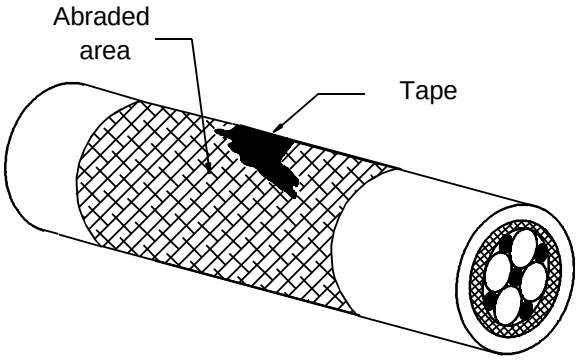


FIGURE 1B1-15. Tape contoured to the cable.

Step 5 - Cover the entire abraded area with one layer of half lapped adhesive and sealant tape, pulling the tape to approximately one-half its original thickness.

Step 6 - Cover the adhesive and sealant tape with one layer of half lapped fiberglass tape.

Step 7 - CAUTION: Do not over heat the cable. Prolonged exposure of the jacket to temperatures above 160°C (320°F) may damage the cable jacket. Discontinue heating of the tape and allow the cable jacket to cool before reheating if the cable jacket shows any signs of bubbling.

Holding the heat gun approximately 102 mm (4 inches) away from the cable, heat the entire area covered by the tape for approximately 3.5 minutes with the heat gun to blend the adhesive and sealant into the fiberglass tape.

Step 8 - Apply a coat of electrical coating to the entire area and let it set a minimum of 10 minutes.

3.5 Procedure IV. Method 1B1-4. Wraparound sleeve with adhesive closure.

3.5.1 The equipment and materials in table 1B1-VI shall be used to perform this procedure.

TABLE 1B1-VI. Equipment and materials.

| Description | Quantity |
|---|---|
| Safety glasses | 1 |
| Ruler | 1 |
| Electricians knife | 1 |
| Emery cloth (or fine file) | As required |
| Adhesive and sealant tape (Raychem Thermofit S1030 or equal) | As required |
| Heat gun (Raychem 500B or equal) | 1 |
| Alcohol bottle with alcohol/2-propanol | 1 |
| Wipes | As required |
| Canned air (or compressed air) | As required |

NOTE: The cable repair sleeve material shall meet the requirements of MIL-I-23053/15 and table 1B1-VII. The material shall be coated with a heat activated adhesive and fabricated into a wrap with a self adhesive closure system as described below.

Step 1 - Select a repair sleeve in accordance with table 1B1-VII.



Source: https://assist.dla.mil -- Downloaded: 2016-12-10T07:47Z
Check the source to verify that this is the current version before use.

TABLE 1B1-VII. Repair sleeve dimensions (wraparound).

| Cable type | Cable O.D. mm (inches) nominal | B Dimension mm (inches) | Repair sleeve dimensions mm (inches) | | | |
|---|---|---|---|---|---|---|
| | | | Length (minimum) | Inside diameter | | Wall thickness after shrinking (+/- 10%) |
| | | | | Expanded (minimum) | Recovered (maximum) | |
| 36-Fiber | 20.8 (.82) | 76 (3.0) | A + 2B | 31.8 (1.25) | 12.7 (.50) | 2.0 (0.08) |

NOTE 1: Refer to figure 1B1-17 for a definition of A and B dimensions.
NOTE 2: Repair sleeves are not currently available for the 4-fiber and 8-fiber cable sizes.

Step 2 - Trim off any frayed, burned, or protruding jacket material with a knife using care not to damage the kevlar or the OFCC jacket (see figure 1B1-16). Square up the jacketing where required.

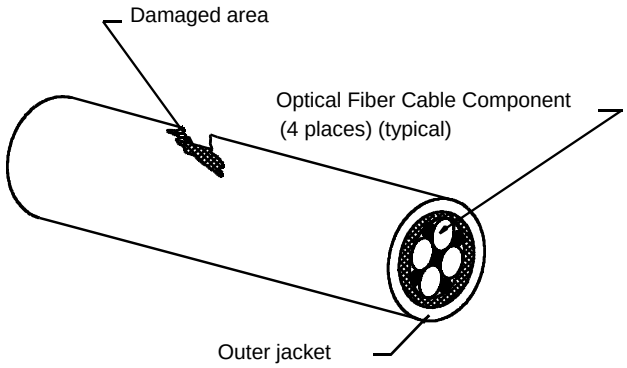


FIGURE 1B1-16. Damaged cable.

Step 3 - Abrade the jacket circumferentially to the dimension shown using emery cloth or a fine file (see figure 1B1-17).

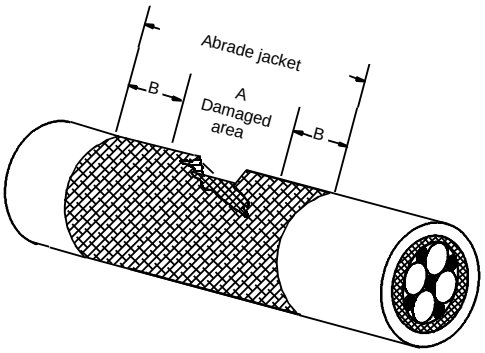


FIGURE 1B1-17. Cable preparation.

Step 4 - Clean the abraded area with alcohol and blow dry with air.

Step 5 - Fill any large depressions or voids with adhesive tape as required to restore the cable contour as follows:

WARNING: Application of too much heat will cause the adhesive to flow and may cause burns if it comes in contact with the skin.

Cut off short strips of adhesive tape and heat them slightly with the heat gun to soften them. Roll the tape with your fingers and press them into the damaged area. Repeat process until the damaged area is filled, then,



Source: https://assist.dla.mil -- Downloaded: 2016-12-10T07:47Z
Check the source to verify that this is the current version before use.

holding the heat gun approximately 102 mm (4 inches) away, apply just enough heat to the tape to form and contour to the cable (see figure 1B1-18).

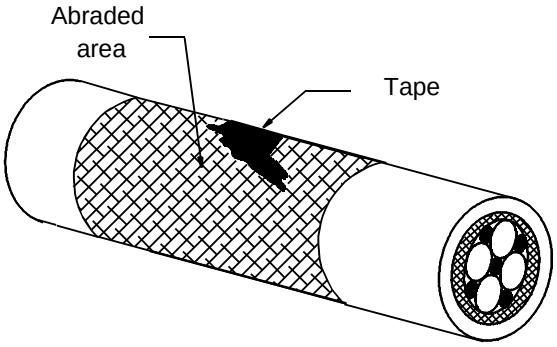


FIGURE 1B1-18. Tape contoured to cable.

Step 6 - Cut the cable jacket repair sleeve to the proper length (see table 1B1-VII.)

Step 7 - CAUTION: Do not overheat the cable. The jacket should be just warm to the touch. Prolonged exposure of the jacket to temperatures above 160°C (320°F) may damage the cable jacket.

Hold the heat gun approximately 102 mm (4 inches) away from the cable and apply heat to all parts of the cable jacket to which the repair sleeve is to be applied.

Step 7 - Remove the protective release tape from both flaps of the sleeve to expose the surfaces of the contact adhesive.

Step 8 - Place the sleeve around the cable so that the sealant side of the sleeve is next to the cable, align the sleeve side edges, and press the contact surfaces together along the full length of the sleeve (see figure 1B1-19).

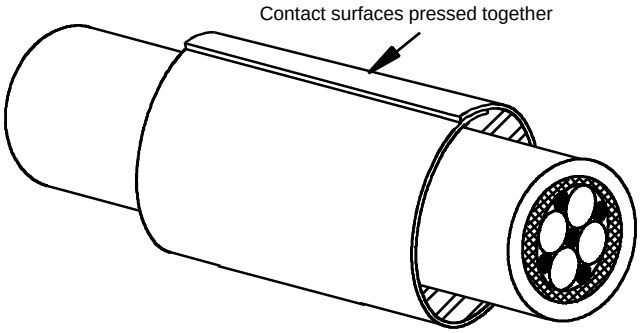


Figure 1B1-19. Assembled sleeve.

Step 9 - CAUTION: Do not over heat the cable. Prolonged exposure of the jacket to temperatures above 160°C (320°F) may damage the cable jacket. Discontinue heating of the tape and allow the cable jacket to cool before reheating if the cable jacket shows any signs of bubbling.

Center the repair sleeve over the damaged area. Hold the heat gun approximately 102 mm (4 inches) away and heat the center by applying heat evenly around the sleeve until it shrinks over cable (see figure 1B1-20). Working towards one end, shrink the sleeve to the cable until sealant is flowing at end of the sleeve. Repeat the procedure on the other half of the sleeve (see figure 1B1-21).



Source: https://assist.dla.mil -- Downloaded: 2016-12-10T07:47Z
Check the source to verify that this is the current version before use.

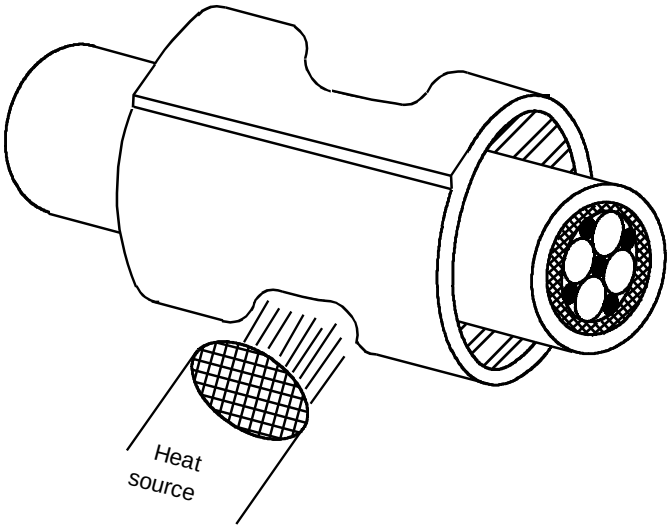


**FIGURE 1B1-20. Shrinking sleeve.**

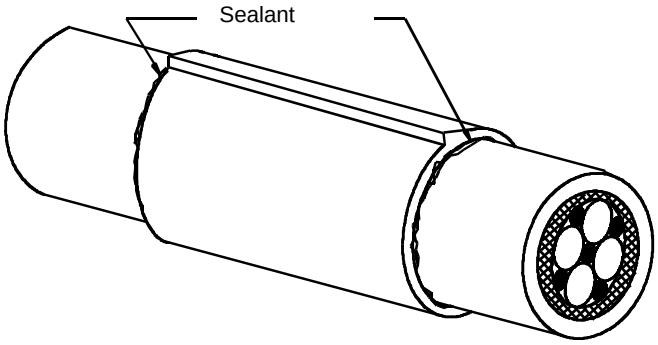


**FIGURE 1B1-21. Completed repair.**

**Step 10 - Remove heat and allow the sleeve to cool.**



Source: https://assist.dla.mil -- Downloaded: 2016-12-10T07:47Z
Check the source to verify that this is the current version before use.

# STANDARDIZATION DOCUMENT IMPROVEMENT PROPOSAL

**INSTRUCTIONS**

1. The preparing activity must complete blocks 1, 2, 3, and 8. In block 1, both the document number and revision letter should be given.
2. The submitter of this form must complete blocks 4, 5, 6, and 7.
3. The preparing activity must provide a reply within 30 days from receipt of the form.

NOTE: This form may not be used to request copies of documents, nor to request waivers, or clarification of requirements on current contracts. Comments submitted on this form do not constitute or imply authorization to waive any portion of the referenced document(s) or to amend contractual requirements.

| I RECOMMEND A CHANGE: | 1. DOCUMENT NUMBER | 2. DOCUMENT DATE *(YYMMDD)* |
|---|---|---|
| | MIL-STD-2042-1A(SH) | 970929 |

3. DOCUMENT TITLE
FIBER OPTIC CABLE TOPOLOGY INSTALLATION STANDARD METHODS FOR NAVAL SHIPS (CABLES)

4. NATURE OF CHANGE *(Identify paragraph number and include proposed rewrite, if possible. Attach extra sheets as needed.)*

5. REASON FOR RECOMMENDATION

6. SUBMITTER

| a. NAME *(Last, First, Middle Initial)* | b. ORGANIZATION | |
|---|---|---|
| c. ADDRESS *(Include Zip Code)* | d. TELEPHONE *(Include Area Code)*<br>(1) Commercial<br>(2) AUTOVON<br>*(If applicable)* | 7. DATE SUBMITTED<br>*(YYMMDD)* |

8. PREPARING ACTIVITY

| a. NAME | b. TELEPHONE *(Include Area Code)* | |
|---|---|---|
| TECHNICAL POINT OF CONTACT IS:<br>DR. CHARLES COURCHAINE 03J2 | (1) Commercial<br>(703) 602-7241 | (2) AUTOVON<br>332-7241 |
| c. ADDRESS *(Include Zip Code)*<br>Commander, Naval Sea Systems Command, SEA 03R42<br>2531 Jefferson Davis Hwy.<br>Arlington, VA 22242-5160 | **IF YOU DO NOT RECEIVE A REPLY WITHIN 45 DAYS, CONTACT:**<br>Defense Quality and Standardization Office<br>5203 Leesburg Pike, Suite 1403, Falls Church, VA 22041-3466<br>Telephone (703) 756-2340 AUTOVON 289-2340 | |



Source: https://assist.dla.mil -- Downloaded: 2016-12-10T07:47Z
Check the source to verify that this is the current version before use.