The documentation and process conversion measures necessary to comply with this revision shall be completed by 5 May 93

INCH-POUND

MIL-S-19500/287D
5 February 1993
SUPERSEDING
MIL-S-19500/287C
9 June 1989

MILITARY SPECIFICATION

SEMICONDUCTOR DEVICE, TRANSISTOR, NPN SILICON, SWITCHING
TYPE 2N3013
JANTX

This specification is approved for use by all Departments and Agencies of the Department of Defense.

1. SCOPE

1.1 Scope. This specification covers the detail requirements for NPN, silicon switching transistors. One level of product assurance are provided for each device type as specified in MIL-S-19500.

1.2 Physical dimensions. See 3.3 (T-2A).

1.3 Maximum ratings.

| Types | $P_T$ 1/ $T_A$ = +25°C | $P_T$ 2/ $T_C$ = +25°C | $V_{CBO}$ | $V_{CEO}$ | $V_{EBO}$ | $I_C$ | $T_{STG}$ and $T_{OP}$ |
|---|---|---|---|---|---|---|---|
| | W | W | V dc | V dc | V dc | mA dc | °C |
| 2N3013 | 0.36 | 1.2 | 40 | 20 | 5.0 | 300 | -65 to +200 |

1/ Derate linearly, 2.10 mW/°C for $T_A$ = 25°C.
2/ Derate linearly, 6.86 mW/°C for $T_A$ = 25°C.

1.4 Primary electrical characteristics at $T_A$ = +25°C.

| Limit | $h_{FE1}$ 1/ $V_{CE}$ = 0.4 V dc $I_C$ = 30 mA dc | $V_{CE(sat)1}$ 1/ $I_C$ = 30 mA dc $I_B$ = 3.0 mA dc | $V_{BE(sat)2}$ 1/ $I_C$ = 30 mA dc $I_B$ = 3.0 mA dc | $t_{on}$ $I_C$ = 300 mA dc $I_{B1}$ = 30 mA dc $V_{CC}$ + 15 V dc | $t_{off}$ $I_C$ = 300 mA dc $I_{B1}$ = 30 mA dc $I_{B2}$ = 30 mA dc | $\|h_{fe}\|$ $V_{CE}$ = 10 V dc $I_C$ = 30 mA dc f = 100 MHz |
|---|---|---|---|---|---|---|
| | | V dc | V dc | ns | ns | |
| Minimum | 35 | | 0.75 | | | 3.5 |
| Maximum | 120 | 0.18 | 0.95 | 15 | 25 | 12.0 |

1/ Pulsed (see 4.5.1)

Beneficial comments (recommendations, additions, deletions) and any pertinent data which may be of use in improving this document should be addressed to: Commander, Defense Electronics Supply Center, ATTN: DESC-ECT, 1507 Wilmington Pike, Dayton, OH 45444-5270 by using the Standardization Document Improvement Proposal (DD Form 1426) appearing at the end of this document or by letter.

AMSC N/A

FSC 5961

DISTRIBUTION STATEMENT A. Approved for public release; distribution is unlimited.

Source: https://assist.dla.mil -- Downloaded: 2016-12-04T00:19Z
Check the source to verify that this is the current version before use.

2. APPLICABLE DOCUMENTS

2.1 Government documents.

2.1.1 Specification, standard, and handbooks. The following specification, standard, and handbooks form a part of this document to the extent specified herein. Unless otherwise specified, the issues of these documents are those listed in the issue of the Department of Defense Index of Specifications and Standards (DODISS) and supplement thereto, cited in the solicitation (see 6.2).

SPECIFICATIONS

MILITARY

MIL-S-19500 - Semiconductor Devices, General Specification for.

STANDARDS

MILITARY

MIL-STD-750 - Test Methods for Semiconductor Devices.

(Unless otherwise indicated, copies of federal and military specifications, standards, and handbooks are available from the Standardization Documents Order Desk, Building 4D, 700 Robbins Avenue, Philadelphia, PA 19111-5094.)

2.2 Order of precedence. In the event of a conflict between the text of this document and the references cited herein, the text of this document takes precedence. Nothing in this document, however, supersedes applicable laws and regulations unless a specific exemption has been obtained.

3. REQUIREMENTS

3.1 Associated detail specification. The individual item requirements shall be in accordance with MIL-S-19500, and as specified herein.

3.2 Abbreviations, symbols, and definitions. The abbreviations, symbols, and definitions used herein are defined in MIL-S-19500.

3.3 Design, construction, and physical dimensions. The design, construction and physical dimensions shall be as specified in MIL-S-19500, appendix F, figure 9 (T-2A).

3.3.1 Lead finish. Lead finish shall be solderable as defined in MIL-S-19500, MIL-STD-750, and herein. Where a choice of lead finish is desired, it shall be specified in the contract or purchase order (see 6.2).

3.4 Marking. Devices shall be marked in accordance with MIL-S-19500. At the option of the manufacturer, the marking of the country of origin may be omitted from the body of the transistor.

4. QUALITY ASSURANCE PROVISIONS

4.1 Sampling and inspection. Sampling and inspection shall be in accordance with MIL-S-19500, and as specified herein.

4.2 Qualification inspection. Qualification inspection shall be in accordance with MIL-S-19500 and as specified herein.



Source: https://assist.dla.mil -- Downloaded: 2016-12-04T00:19Z
Check the source to verify that this is the current version before use.

4.3 Screening. Screening shall be in accordance with MIL-S-19500 (table II) and as specified herein. The following measurements shall be made in accordance with table I herein. Devices that exceed the limits of table I herein shall not be acceptable.

| Screen (see table II of MIL-S-19500) | Measurement |
|---|---|
| | JANTX levels |
| 9 | Not applicable |
| 11 | $I_{CES1}$ and $h_{FE1}$ |
| 12 | See 4.3.1 |
| 13 | Subgroup 2 of table I herein, $\Delta I_{CES1}$ = 100% of initial value or 50 nA dc, whichever is greater; $\Delta h_{FE1}$ = ±20% of initial value. |

4.3.1 Power burn-in conditions. Power burn-in conditions are as follows:

2N3013 - - - - $V_{CB} \geq 10$ V dc, $P_T$ = 360 mW at $T_A$ = +25° ±3°C.

NOTE: No heat sink or forced air cooling on the devices shall be permitted.

4.4 Quality conformance inspection. Quality conformance inspection shall be in accordance with MIL-S-19500 and as specified herein. Group A inspection shall be performed on each sublot.

4.4.1 Group A inspection. Group A inspection shall be conducted in accordance with MIL-S-19500 and table I herein.

4.4.2 Group B inspection. Group B inspection shall be conducted in accordance with the conditions specified for subgroup testing in table IVb (JANTX), of MIL-S-19500. Electrical measurements (end-points) and delta requirements shall be in accordance with the applicable steps of table II herein.

4.4.2.1 Group B inspection, table IVb (JANTX and JANTXV of MIL-S-19500. Subgroup 3, condition for steady-state operation life are as follows: $V_{CB} \geq 10$ V dc, $P_T$ = 300 mW, $T_A$ = +25°C ±3°C. No heat sink or forced air cooling on the devices shall be permitted.

4.4.3 Group C inspection. Group C inspection shall be conducted in accordance with the conditions specified for subgroup testing in table V of MIL-S-19500. Electrical measurements (end-points) and delta requirements shall be in accordance with the applicable steps of table II herein.

4.4.3.1 Group C inspection, table V of MIL-S-19500.

a. Subgroup 2, condition for thermal shock (glass strain) is test condition A.

b. Subgroup 2, condition for terminal strength is test condition E.

c. Subgroup 6, condition for steady-state operation life (accelerated) are as follows: 1000 hours at $V_{CB} \geq 10$ V dc, $P_T$ = 300 mW, $T_A$ = +25°C ±3°C. No heat sink or forced air cooling on the devices shall be permitted.



Source: https://assist.dla.mil -- Downloaded: 2016-12-04T00:19Z
Check the source to verify that this is the current version before use.

4.5 Methods of inspection. Methods of inspection shall be as specified in the appropriate tables and as follows.

4.5.1 Pulse measurements. Conditions for pulse measurement shall be as specified in section 4 of MIL-STD-750.

5 PACKAGING

5.1 Packaging requirements. The requirements for packaging shall be in accordance with MIL-S-19500.

6. NOTES

(This section contains information of a general or explanatory nature that may be helpful, but is not mandatory.)

6.1 Notes. The notes specified in MIL-S-19500 are applicable to this specification.

6.2 Acquisition requirements. Acquisition documents should specify the following:

a. Issue of DODISS to be cited in the solicitation.

b. Lead finish as specified (see 3.3.1).

c. Product assurance level and type designation.

6.3 Supersession information. Devices covered by this specification supersedes the manufacturers' and users' Part or Identifying Number (PIN). This information in no way implies that manufacturers' PIN's are suitable as a substitute for the military PIN.

| Military PIN | Manufacturers' CAGE code | Manufacturers' and users' PIN |
|---|---|---|
| 2N3013JAN | 04713 | SS5623H<br>ST1334H<br>SUN0520H1<br>SUN1015H<br>SUN1051H1 |

6.4 Changes from previous issue. Marginal notations are not used in this revision to identify changes with respect to the previous issue, due to the extensiveness of the changes.



Source: https://assist.dla.mil -- Downloaded: 2016-12-04T00:19Z
Check the source to verify that this is the current version before use.

TABLE I. Group A inspection.

| Inspection 1/ | MIL-STD-750 | | Symbol | Limits | | Unit |
|---|---|---|---|---|---|---|
| | Method | Conditions | | Min | Max | |
| Subgroup 1 | | | | | | |
| Visual and mechanical examination | 2071 | | | | | |
| Subgroup 2 | | | | | | |
| Breakdown voltage, collector to base | 3001 | Bias Condition D, $I_C$ = 100 µA dc | $V_{(BR)CBO}$ | 40 | | V dc |
| Breakdown voltage, collector to emitter | 3011 | Bias Condition D, $I_C$ = 10 mA dc pulsed (see 4.5.1) | $V_{(BR)CEO}$ | 20 | | V dc |
| Breakdown voltage, collector to emitter | 3011 | Bias Condition C, $I_C$ = 100 µA dc | $V_{(BR)CES}$ | 40 | | V dc |
| Breakdown voltage, emitter to base | 3026 | Bias Condition D, $I_E$ = 100 µA dc | $V_{(BR)EBO}$ | 5 | | V dc |
| Collector to emitter cutoff current | 3041 | Bias Condition C, $V_{CE}$ = 20 V dc $V_{BE}$ = 0 | $I_{CES1}$ | | 300 | nA dc |
| Forward-current transfer ratio | 3076 | $V_{CE}$ = 0.4 V dc; $I_C$ = 30 mA dc; pulsed (see 4.5.1) | $h_{FE1}$ | 35 | 120 | |
| Forward-current transfer ratio | 3076 | $V_{CE}$ = 0.5 V dc; $I_C$ = 100 mA dc; pulsed (see 4.5.1) | $h_{FE2}$ | 30 | | |
| Forward-current transfer ratio | 3076 | $V_{CE}$ = 1.0 V dc; $I_C$ = 300 mA dc; pulsed (see 4.5.1) | $h_{FE3}$ | 15 | | |
| Collector to emitter voltage (saturated) | 3071 | $I_C$ = 30 mA dc; $I_B$ = 3.0 mA dc; pulsed (see 4.5.1) | $V_{CE(sat)1}$ | | 0.18 | V dc |
| Collector to emitter voltage (saturated) | 3071 | $I_C$ = 100 mA dc; $I_B$ = 10 mA dc; pulsed (see 4.5.1) | $V_{CE(sat)2}$ | | 0.28 | V dc |
| Collector to emitter voltage (saturated) | 3071 | $I_C$ = 300 mA dc; $I_B$ = 30 mA dc; pulsed (see 4.5.1) | $V_{CE(sat)3}$ | | 0.50 | V dc |
| Base to emitter voltage (saturated) | 3066 | Test condition A; $I_C$ = 30 mA dc; $I_B$ = 10 mA dc; pulsed (see 4.5.1) | $V_{BE(sat)1}$ | 0.75 | 0.95 | V dc |
| Base to emitter voltage (saturated) | 3066 | Test condition A; $I_C$ = 100 mA dc; $I_B$ = 10 mA dc; pulsed (see 4.5.1) | $V_{BE(sat)2}$ | | 1.20 | V dc |
| Base to emitter voltage (saturated) | 3066 | Test condition A; $I_C$ = 300 mA dc; $I_B$ = 30 mA dc; pulsed (see 4.5.1) | $V_{BE(sat)3}$ | | 1.70 | V dc |

See footnotes at end of table.



Source: https://assist.dla.mil -- Downloaded: 2016-12-04T00:19Z
Check the source to verify that this is the current version before use.

TABLE I. Group A inspection - Continued

| Inspection 1/ | MIL-STD-750 | | Symbol | Limits | | Unit |
|---|---|---|---|---|---|---|
| | Method | Conditions | | Min | Max | |
| Subgroup 3 | | | | | | |
| High temperature operation | | $T_A$ = +125°C | | | | |
| Collector to emitter cutoff current | 3041 | Bias Condition D, $V_{CB}$ = 20 V dc $V_{BE}$ = 0 | $I_{CES2}$ | | 40 | µA dc |
| Collector to emitter voltage (saturated) | 3071 | $I_C$ = 30 mA dc; $I_B$ = 3.0 mA dc; pulsed (see 4.5.1) | $V_{CE(sat)4}$ | | 0.25 | V dc |
| Low-temperature operation | | $T_A$ = -55°C | | | | |
| Forward-current transfer ratio | 3076 | $V_{CE}$ = 0.4 V dc; $I_C$ = 30 mA dc pulsed (see 4.5.1) | $h_{FE4}$ | 15 | | |
| Subgroup 4 | | | | | | |
| Open circuit output capacitance | 3236 | $V_{CB}$ = 5 V dc; $I_E$ = 0; f = 140 kHz | $C_{obo}$ | | 5 | pf |
| Input capacitance (output open-circuited) | 3240 | $V_{EB}$ = 0.5 V dc; $I_C$ = 0; f = 140 kHz | $C_{ibo}$ | | 8 | pf |
| Magnitude of common emitter, small-signal short-circuit forward current transfer ratio | 3306 | $V_{CE}$ = 10 V dc; $I_C$ = 30 mA dc; f = 100 MHz | $\|h_{FE}\|$ | 3.5 | 12 | |
| Storage time | 3251 | Test condition A; $I_C$ = 10 mA dc; $I_{B1}$ = $I_{B2}$ = -10 mA dc (see fig.3) | $t_s$ | | 18 | ns |
| Saturated turn-on time | 3251 | $I_C$ = 300 mA dc; $I_B$ = 30 mA dc; $V_{CC}$ = 15 V dc; (see fig. 2); Test condition A | $t_{on}$ | | 15 | ns |
| Saturated turn-off time | 3251 | $I_C$ = 300 mA dc; $I_{B1}$ = $I_{B2}$ = 30 mA dc; $V_{CC}$ = 15 V dc; (see fig. 2); Test condition A | $t_{off}$ | | 25 | ns |
| Subgroup 5, 6, and 7 | | | | | | |
| Not applicable | | | | | | |

1/ For sampling plans, see MIL-S-19500.

Source: https://assist.dla.mil -- Downloaded: 2016-12-04T00:19Z
Check the source to verify that this is the current version before use.

TABLE II. Groups B and C electrical measurements

| Step | Inspection | MIL-STD-750 | | Symbol | Limits | | Unit |
|---|---|---|---|---|---|---|---|
| | | Method | Conditions | | Min | Max | |
| 1 | Collector to emitter cutoff current | 3041 | Bias condition C; $V_{CE}$ = 20 V dc | $I_{CES1}$ | | 0.3 | µA dc |
| 2 | Collector to emitter cutoff current | 3041 | Bias condition C; $V_{CE}$ = 20 V dc | $I_{CES2}$ | | 0.6 | µA dc |
| 3 | Forward-current transfer ratio | 3076 | $V_{CE}$ = 0.4 V dc; $I_C$ = 30 mA dc; pulsed (see 4.5.1) | $h_{FE1}$ | 35 | 120 | |
| 4 | Forward-current transfer ratio | 3076 | $V_{CE}$ = 0.4 V dc; $I_C$ = 30 mA dc pulsed (see 4.5.1) | $\Delta h_{FE1}$ | ±25 percent change from initial value | | |

1/ The electrical measurements for table IVb (JANTX) of MIL-S-19500 are as follows:

a. Subgroup 2, see table II herein, steps 1 and 3.

b. Subgroups 3 and 6, see table II herein, steps 2 and 4.

2/ The electrical measurements for table V of MIL-S-19500 are as follows:

a. Subgroups 2 and 3, see table II herein, steps 1 and 3.

b. Subgroup 6, see table II herein, steps 2 and 4.



Source: https://assist.dla.mil -- Downloaded: 2016-12-04T00:19Z
Check the source to verify that this is the current version before use.

| Symbol | Dimensions | | | | Notes |
|---|---|---|---|---|---|
| | Inches | | Millimeters | | |
| | Min | Max | Min | Max | |
| $\phi B$ | .0325 | .0335 | 0.83 | 0.85 | 5 |
| $\phi B_1$ | .043 Nom | | 1.09 Nom | | 5 |
| $\phi D$ | .2310 | .2315 | 5.87 | 5.88 | |
| $\phi D_1$ | .159 | .161 | 4.04 | 4.09 | |
| $\phi D_2$ | .040 Nom | | 1.02 Nom | | 6 |
| E | .0995 | .1005 | 2.53 | 2.55 | |
| $E_1$ | .0495 | .0505 | 1.26 | 1.28 | |
| H | .145 | .155 | 3.68 | 3.94 | |
| J | .0470 | .0475 | 1.19 | 1.21 | |
| $J_1$ | .0235 | .0245 | 0.60 | 0.62 | |
| K | .009 | .011 | 0.23 | 0.28 | |
| $K_1$ | .005 Nom | | .127 Nom | | |
| L | .372 | .378 | 9.45 | 9.60 | |
| $L_1$ | .054 | .055 | 1.37 | 1.40 | |
| $L_2$ | .043 Nom | | 1.09 Nom | | |
| Q | .040 Nom | | 1.02 Nom | | |
| $Q_1$ | .123 | .127 | 3.12 | 3.23 | |
| A | 44.90° | 45.10° | | | |
| B | 45° Nom | | | | |
| Y | 90° Nom | | | | |

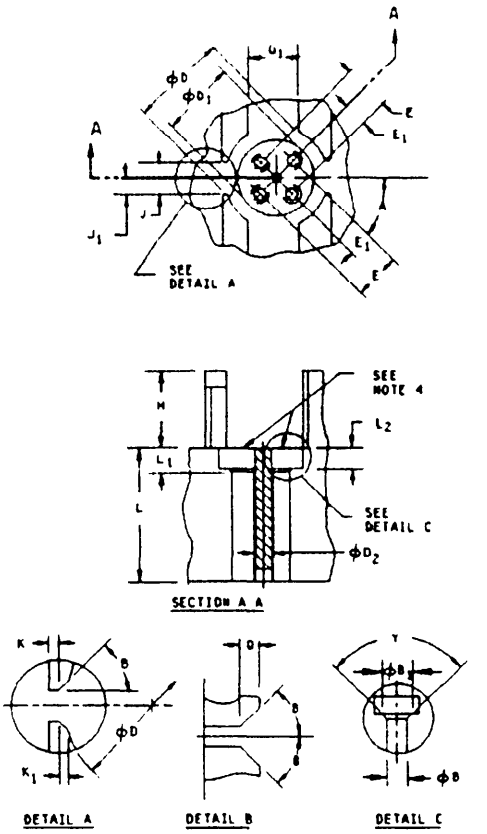


NOTES:

1. Dimensions are in inches.
2. Metric equivalents are given for general information only.
3. The following gauge procedure shall be used: The device being measured shall be inserted until its seating plane is .125 inch (3.18 mm) +.010 inch (0.25 mm) from seating surface of the gauge. A force of 8 ±.5 oz. shall then be applied parallel and symmetrical to the device's cylindrical axis. When examined visually after the force application (the force need not to be removed) the seating plane of the device shall be seated against the gauge. The use of a pin straightener prior to insertion in the gauge is permissible. a spacer may be used to obtain the .125 inch (3.18 mm) distance from the gauge seat prior to force application.
4. These surfaces to be parallel and in same plane within ±.001 inch (0.03 mm).
5. Four holes.
6. Pressed in.

FIGURE 1. Gauge for lead and tab location for transistor type 2N3013 and TX2N3013.



Source: https://assist.dla.mil -- Downloaded: 2016-12-04T00:19Z
Check the source to verify that this is the current version before use.

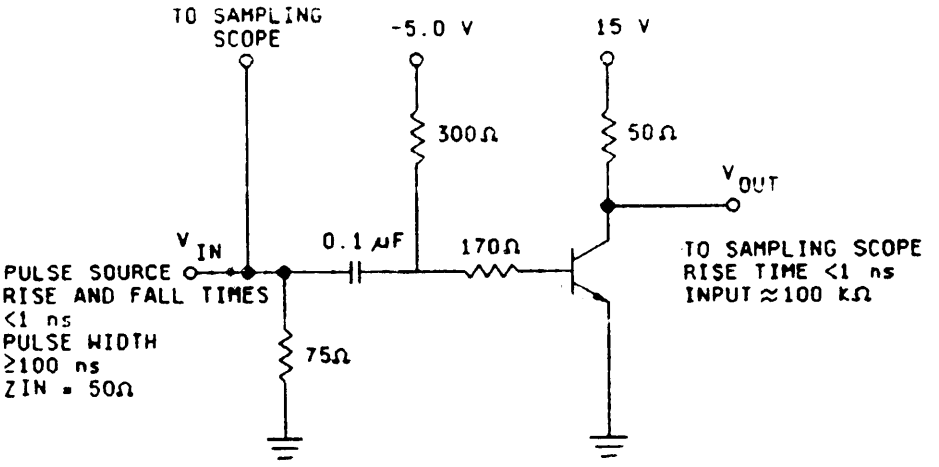


FIGURE 2. $T_{on}$ and $T_{off}$ test circuit.

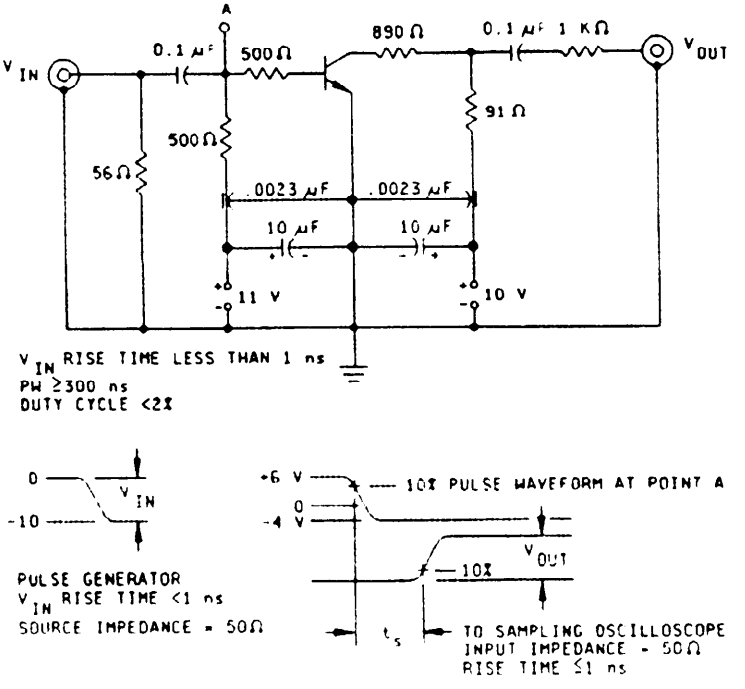


FIGURE 3. Charge storage [illegible] test circuit.



Source: https://assist.dla.mil -- Downloaded: 2016-12-04T00:19Z
Check the source to verify that this is the current version before use.

CONCLUDING MATERIAL

Custodians:
Army - ER
Navy - EC
Air Force - 17
NASA - NA

Review activities:
Army - MI
Air Force - 85, 99
DLA - ES

User activities:
Army - SM
Navy - AS, CG, MC, OS
Air Force - 13, 15

Preparing activity:
Navy - EC

Agent:
DLA - ES

(Project 5961-1413)



Source: https://assist.dla.mil -- Downloaded: 2016-12-04T00:19Z
Check the source to verify that this is the current version before use.