MIL-J-641E
26 February 1979
SUPERSEDING
MIL-J-641D
3 July 1973, and
MIL-T-81643(AS)
11 April 1973

MILITARY SPECIFICATION

JACKS, TELEPHONE, GENERAL SPECIFICATION FOR

This specification is approved for use by all Departments and Agencies of the Department of Defense.

1. SCOPE

1.1 Scope. This specification covers jacks used in telephone (including telephone switchboard consoles), telegraph, and teletype circuits, and for connecting headsets, handsets, and microphones into communications circuits.

1.2 Classification. Jacks shall be of the types specified (see 3 1)

2. APPLICABLE DOCUMENTS

2.1 Issues of documents. The following documents of the issue in effect on date of invitation for bids or request for proposal, form a part of this specification to the extent specified herein

SPECIFICATIONS

FEDERAL

L-P-349 - Plastic, Molding and Extrusion Material, Cellulose Acetate Butyrate.

MILITARY

MIL-W-76 - Wire and Cable, Hookup, Electrical, Insulated.
MIL-P-79 - Plastic Rods and Tubes, Thermosetting, Laminated
MIL-M-20693 - Molding Plastic, Polyamide (Nylon), Rigid.
MIL-P-22985 - Plastic Molding and Extrusion Material, Ethyl Cellulose.
MIL-C-45662 - Calibration Systems Requirements.
MIL-C-55330 - Connectors, Preparation for Delivery of.

(See supplement 1 for list of associated specification sheets).

STANDARDS

MILITARY

MIL-STD-105 - Sampling Procedures and Tables for Inspection by Attributes
MIL-STD-202 - Test Methods for Electronic and Electrical Component Parts
MIL-STD-454 - Standard General Requirements for Electronic Equipment.
MIL-STD-1285 - Marking of Electrical and Electronic Parts.

(Copies of specifications, standards, drawings, and publications required by contractors in connection with specific procurement functions should be obtained from the procuring activity or as directed by the contracting officer.)

Beneficial comments (recommendations, additions, deletions) and any pertinent data which may be of use in improving this document should be addressed to: (US Army Electronics Command, ATTN: DRDCO-CM-BM, Fort Monmouth, NJ 07703) by using the self-addressed Standardization Document Improvement Proposal (DD Form 1426) appearing at the end of this document or by letter.

FSC 5935

Source: https://assist.dla.mil -- Downloaded: 2016-11-12T22:55Z
Check the source to verify that this is the current version before use.

2.2 Other publications. The following document forms a part of this specification to the extent specified herein. Unless otherwise indicated, the issue in effect on date of invitation for bids or request for proposal shall apply:

NATIONAL BUREAU OF STANDARDS

Handbook H28 - Screw-Thread Standards for Federal Services.

(Application for copies should be addressed to the Superintendent of Documents, Government Printing Office, Washington, D.C. 20402.)

3. REQUIREMENTS

3.1 Specification sheets. The individual item requirements shall be as specified herein and in accordance with the applicable specification sheets. In the event of conflict between requirements of this specification and the specification sheet, the latter shall govern.

3.2 Classification of requirements. The requirements for the jacks are classified herein as follows:

Requirement	Paragraph
Qualification - - - - - - - - - - - - -	3.3
Materials - - - - - - - - - - - - - - -	3.4
Design and construction - - - - - - -	3.5
Performance - - - - - - - - - - - - - -	3.6

3.3 Qualification. Jacks furnished under this specification shall be products which are qualified for listing on the applicable qualified products list at the time set for opening of bids (see 4.4 and 6.4).

3.4 Materials. The materials shall be as specified herein. However, when a definite material is not specified, a material shall be used which enable the jacks to meet the performance requirements of this specification. Acceptance or approval of any constituent material shall not be construed as a guaranty of the acceptance of the finished product.

3.4.1 Fungus-inert. Materials used in the construction of these jacks shall be fungus-inert (see requirement 4 of MIL-STD-454).

3.4.2 Shells. Unless otherwise specified (see 3.1), shells shall be plastic, conforming to type IV of MIL-M-20693, form R or Tm, type PBE, of MIL-P-79; type II of MIL-P-22985; type III, class MH, grade E, of L-P-349; or a substituted polyarylether material, such as a polysulfone.

3.4.3 Metal parts. All metal parts shall be of corrosion-resistant material or shall be plated to resist corrosion, to permit compliance with the salt spray requirements of 3.6.11.

3.4.4 Springs. Contact springs shall be nickel-silver or copper alloy. Copper alloy springs shall be suitably plated to prevent corrosion of the basis metal.

3.4.5 Contact spring lifters. Hard rubber shall not be used for contact spring lifters

3.5 Design and construction.

3.5.1 Jacks. Jacks shall be of the design and construction specified (see 3.1).

3.5.2 Cable clamp (when specified (see 3.1)). A cable clamp for anchoring the electrical cable to the frame of the jack shall be supplied with the jack. If the cable clamp is not made as an integral part of the jack, the clamp shall be loosely assembled to or packaged with the jack. Twine serving is not acceptable for this service.

Source: https://assist.dla.mil -- Downloaded: 2016-11-12T22:55Z
Check the source to verify that this is the current version before use.

3.5.3 Conductor strain relief (when specified (see 3.1)). Provisions for anchoring the stay cord to provide strain relief for the conductors of the electrical cable shall be included in the jack, all edges of the anchor in contact with the stay cord shall be rounded off.

3.5.4 Screw threads. Screw threads on removable or replaceable threaded parts shall be in accordance with Handbook H28.

3.5.5 Solder-lug terminals. Solder-lug terminals shall have circular or oval holes which will accommodate, after coating , two size 20 AWG, 7-strand wires for connections to electrical circuits Stacked terminals shall be staggered. The exposed parts of the terminals shall be hot-tin-dipped or hot-solder-dipped, to facilitate soldering. Care shall be taken that the terminal-lug holes are not closed by the solder. Where solder-dipping is employed, only noncorrosive fluxes shall be used

3.6 Performance.

3.6.1 Contact resistance. When jacks are tested as specified in 4.6.2, the contact resistance shall not exceed 0.02 ohm, except following the shock, vibration, and spring life test, the contact resistance shall not exceed 0.02 ohm, and following the salt spray test, the contact resistance shall not exceed 0.10 ohm.

3.6.2 Insulation resistance. When jacks are tested as specified in 4.6.3, the insulation resistance shall be 10,000 megohms or greater, and 1,000 megohms or greater after the moisture resistance test (see 4.6.7) or the salt spray test (see 4.6.12), unless otherwise specified (see 3.1).

3.6.3 Dielectric withstanding voltage. When tested as specified in 4.6.4, jacks shall withstand a minimum of 500 volts root mean square (rms) without dielectric breakdown or flashover.

3.6.4 Insertion and withdrawal forces. When jacks are tested as specified in 4.6.5, the insertion and withdrawal forces shall be as specified.(see 3.1).

3.6.5 Thermal shock. When jacks are tested as specified in 4.6.6, the insulation shall not be cracked, warped, or delaminated; all marking shall remain legible; and it shall be possible to remove and replace screw-on shells (where used) without the use of tools other than a screwdriver inserted in the slot in the end of the metal portion of the jack.

3.6.6 Moisture resistance. When jacks are tested as specified in 4.6.7, the initial insulation resistance shall be as specified in 3.6.2. Following step 6 of the final cycle, at a relative humidity of 90 to 98 percent, the insulation resistance shall be not less than 1 megohm. Following the drying period, the insulation resistance, contact resistance, and dielectric withstanding voltage shall be as specified in 3.6.2, 3.6.1, and 3.6.3, respectively; the insulation shall not be cracked, warped, or delaminated; there shall be no excessive corrosion (see 3.6.11) of metal parts; all marking shall remain legible; and it shall be possible to remove and replace screw-on shells (where used) without the use of tools other than a screwdriver inserted in the slot in the end of the metal portion of the jack.

3.6.7 Vibration. When jacks are tested as specified in 4.6.8, there shall be no damage or loosening of parts, loss of electrical continuity for more than a period of 10, microseconds with a current of 100 milliamperes dc, and the mating plug shall not separate from the jack, and the contact resistance shall be as specified in 3.6.1.

3.6.8 Shock (specified pulse). When jacks are tested as specified in 4.6.9, there shall be no visual evidence of mechanical damage, rupture of dielectric materials, loss of electrical continuity for more than a period of ten microseconds with a current of 100 milliamperes dc, or loosening of parts.

3.6.9 Spring life. When jacks are tested as specified in 4.6.10, there shall be no danger or loosening of parts, and the insertion and withdrawal forces, dielectric withstanding voltage, and contact resistance shall be as specified in 3.6.4, 3.6.3, and 3.6.1, respectively.

3.6.10 Water seal (when specified (see 3.1)). When jacks are tested as specified in 4.6 11, there shall be no water leakage.

Source: https://assist.dla.mil -- Downloaded: 2016-11-12T22:55Z
Check the source to verify that this is the current version before use.

3.6.11 Salt spray (corrosion). When jacks are tested as specified in 4.6.12, there shall be no excessive corrosion of metal parts; the insulation shall not be cracked, warped, or delaminated; and the contact resistance shall be as specified in 3.6.1. Excessive corrosion shall be construed as any corrosion which interferes with electrical or mechanical performance, or, in the case of plated metals, when the corrosive action has passed through the plating and attacked the basis metal. Exposed screw threads may be protected with a suitable coating.

3.6.12 Frame strength (when specified (see 3.1)). When jacks are tested as specified in 4.6.13, there shall be no rupture of joints.

3.6.13 Strain relief (when specified (see 3.1)). When tested in accordance with 4.6.14, there shall be no evidence of damage or cutting of the conductors or stay cord.

3.6.14 Contact spring pressure (When specified (see 3.1)).

3.6.14.1 Mated jacks. When tested in accordance with 4.6.15.1, the force required to lift each contact spring sufficiently to break electrical contact with the mating plug shall be 16 ounces minimum.

3.6.14.2 Unmated jacks. When tested in accordance with 4.6.15.2, the force required to lift each contact spring of the jack by an amount between 0.005 inch and 0.015 inch shall be 12 ounces minimum.

3.6.16 Contact spring overtravel (When specified (see 3.1)). When tested as specified in 4.6 16, the contact springs shall flex a minimum of 0.020 inch and a maximum of 0.030 inch, except the number one contact spring may flex a maximum of 0.045 inch.

3.6.16 Static load (When specified (see 3.1)). When jacks are tested as specified in 4.6.17, there shall be no damage or loosening of parts.

3.6.17 Longitudinal pull (When specified (see 3.1)). When tested in accordance with 4.6.18, there shall be no damage or loosening of parts, loss of electrical continuity for more than a period of ten microseconds with a current of 100 ±2 milliamperes dc, and the mating plug shall not separate from the jack, and the contact resistance shall be as specified in 3.6.1.

3.7 Marking. Jacks shall be marked in accordance with method I of MIL-STD-1285, and shall include the manufacturer's name, trademark, or source code and the part number (see 3.1).

3.8 Workmanship. Jacks shall be processed in such a manner as to be uniform in quality and shall be free from defects that will affect life, serviceability, and appearance. There shall be no evidence of loose contacts; poor or improper molding or fabrication; damaged or improperly assembled contacts; peeling, flaking, or chipping of plating or finish; mechanical damage due to testing environment; nicks or burrs of metal parts or surfaces; improper or incorrect marking; or improper tinning of solder cups, terminals, pins, or contacts.

4. QUALITY ASSURANCE PROVISIONS

4.1 Responsibility for inspection. Unless otherwise specified in the contract, the contractor is responsible for the performance of all inspection requirements as specified herein. Except as otherwise specified in the contract, the contractor may use his own or any other facilities suitable for the performance of the inspection requirements specified herein, unless disapproved by the Government. The Government reserves the right to perform any of the inspections set forth in the specification where such inspections are deemed necessary to assure supplies and services conform to prescribed requirements.

4.1.1 Test equipment and inspection facilities. Test and measuring equipment and inspection facilities of sufficient accuracy, quality and quantity to permit performance of the required inspection shall be established and maintained by the contractor. The establishment and maintenance of a calibration system to control the accuracy of the measuring and test equipment shall be in accordance with MIL-C-45662.

4.2 Classification of inspections. The inspections specified herein are classified as follows:

a. Qualification inspection (see 4.4).
b. Quality conformance inspection (see 4.5).

Source: https://assist.dla.mil -- Downloaded: 2016-11-12T22:55Z
Check the source to verify that this is the current version before use.

4.3 Inspection conditions. Unless otherwise specified herein, all inspections shall be performed in accordance with the test conditions specified in the "GENERAL REQUIREMENTS" of MIL-STD-202.

4.3.1 Mating plugs. Mating plugs used for inspections of jacks shall have been listed on, or approved for listing on, the applicable qualified products list.

4.4 Qualification inspection. Qualification inspection shall be performed at a laboratory acceptable to the Government (see 6.4) on sample units produced with equipment and procedures normally used in production.

4.4.1 Sample size. Twelve jacks of each type shall be subjected to qualification inspection.

4.4.2 Inspection routine. The sample shall be subjected to the inspections specified in table I, in the order shown. All sample units shall be subjected to the inspections of groups I and II. The sample shall then be divided equally into two groups of six units each and subjected to the inspection for their particular group.

4.4.3 Failures. One or more failures shall be cause for refusal to grant qualification approval

4.4.4 Retention of qualification. To retain qualification, the contractor shall forward a report to the qualifying activity at the end of 24 months. The qualifying activity shall establish the initial reporting date. Subsequent reporting periods will be 36 months each. The report shall consist of:

a. A summary of the results of the tests performed for inspection of product for delivery groups A and B, indicating as a minimum the number of lots that have passed and the number that have failed. The results of tests of all reworked lots shall be identified and accounted for.
b. A summary of the results of tests performed for verification of qualification inspection, group C, including the number and mode of failures. The summary shall include results of all verification of qualification inspection tests performed and completed during the 24- or 36-month period. If the summary of the test results indicates nonconformance with specification requirements, and corrective action acceptable to the qualifying activity has not been taken, action may be taken to remove the failing product from the qualified products list.

Failure to submit the report within 30 days after the end of each 24- or 36-month period may result in loss of qualification for the product. In addition to the periodic submission of inspection data, the contractor shall immediately notify the qualifying activity at any time during the 24- or 36-month period that the inspection data indicates failure of the qualified product to meet the requirements of this specification.

In the event that no production occurred during the reporting period, a report shall be submitted certifying that the company still has the capabilities and facilities necessary to produce the item. If during 2 consecutive reporting periods there has been no production, the manufacturer may be required, at the discretion of the qualifying activity, to submit a representative product of each type to testing in accordance with the qualification inspection requirements.

4.4.5 Extension of qualification. Jacks of the same type shall be qualified for any permissible color other than that tested during qualification inspection, provided that the material and design and construction used are identical.

4.4.6 Group qualification. Group qualification shall be as specified (see 3.1).

Source: https://assist.dla.mil -- Downloaded: 2016-11-12T22:55Z
Check the source to verify that this is the current version before use.

TABLE I. Qualification inspection.

Inspection	Requirement paragraph	Test paragraph
Group I (all sample units)		
Visual and mechanical examination 1/ - - - -	3.1, 3.4, 3.5, 3.7, 3.8	4.6.1
Group II (all sample units)		
Contact resistance - - - - - - - - - - - - -	3.6.1	4.6.2
Insulation resistance- - - - - - - - - - - -	3.6.2	4.6.3
Dielectric withstanding voltage- - - - - - -	3.6.3	4.6.4
Insertion and withdrawal forces- - - - - - -	3.6.4	4.6.5
Strain relief- - - - - - - - - - - - - - - -	3.6.13	4.6.14
Static load- - - - - - - - - - - - - - - - -	3.6.16	4.6.17
Longitudinal pull- - - - - - - - - - - - - -	3.6.17	4.6.18
Group III (6 sample units)		
Thermal shock- - - - - - - - - - - - - - - -	3.6.5	4.6.6
Moisture resistance- - - - - - - - - - - - -	3.6.6	4.6.7
Vibration, high frequency- - - - - - - - - -	3.6.7	4.6.8
Shock (specified pulse)- - - - - - - - - - -	3.6.8	4.6.9
Insulation resistance- - - - - - - - - - - -	3.6.2	4.6.3
Dielectric withstanding voltage- - - - - - -	3.6.3	4.6.4
Group IV (6 sample units)		
Contact resistance - - - - - - - - - - - - -	3.6.1	4.6.2
Spring life- - - - - - - - - - - - - - - - -	3.6.9	4.6.10
Contact spring pressure- - - - - - - - - - -	3.6.14	4.6.15
Contact spring overtravel- - - - - - - - - -	3.6.15	4.6.16
Water seal (when specified)- - - - - - - - -	3.6.10	4 6.11
Dielectric withstanding voltage- - - - - - -	3.6.3	4.6.4
Salt spray (corrosion) - - - - - - - - - - -	3.6.11	4.6.12
Frame strength (when specified)- - - - - - -	3.6.12	4.6.13

1/ Marking will be considered defective only if it is illegible at the completion of any of the required tests.

4.5 Quality conformance inspection.

4.5.1 Inspection of product for delivery. Inspection of product for delivery shall consist of groups A and B inspections.

4.5.1.1 Inspection lot. An inspection lot shall consist of all jacks of the same basic type produced under essentially the same conditions, and offered for inspection at one time. An inspection lot may include jacks of the same basic type having shells of different colors, provided that the jacks are otherwise mechanically and dimensionally identical.

4.5.1.2 Group A inspection. Group A inspection shall consist of visual and mechanical examination (see 4.6.1).

4.5.1.2.1 Sampling plan. Statistical sampling and inspection shall be in accordance with MIL-STD-105 for general inspection level II. The acceptable quality levels (AQL) shall be 1.0 and 2.5 (percent defective) for major or minor defects, respectively. Major and minor defects shall be as defined in MIL-STD-105.

Source: https://assist.dla.mil -- Downloaded: 2016-11-12T22:55Z
Check the source to verify that this is the current version before use.

4.5.1.2.2 Rejected lots. If an inspection lot is rejected, the contractor may rework it to correct the defects, or screen out the defective units, and resubmit for reinspection. Resubmitted lots shall be inspected using tightened inspection and shall not thereafter be tendered for acceptance unless the former rejection or requirement of correction is disclosed. Such lots shall be separate from new lots, and shall be clearly identified as reinspected lots.

4.5.1.3 Group B inspection. Group B inspection shall consist of the inspections specified in table II, in the order shown, and shall be made on sample units which have been subjected to and have passed the group A inspection.

4.5.1.3.1 Sampling plan. The sampling plan shall be in accordance with MIL-STD-105 for special inspection level S-4. The sample size shall be based on the inspection lot size from which the sample was selected for group A inspection. The AQL shall be 4.0 percent defective.

4.5.1.3.2 Rejected lots. If an inspection lot is rejected, the contractor may rework it to correct the defects, or screen out the defective units, and resubmit for reinspection. Resubmitted lots shall be inspected using tightened inspection and shall not thereafter be tendered for acceptance unless the former rejection or requirement of correction is disclosed. Such lots shall be separate from new lots, and shall be clearly identified as reinspected lots.

TABLE II. Group B inspection.

Inspection	Requirement paragraph	Test paragraph
Contact resistance - - - - - - - - -	3.6.1	4.6.2
Insulation resistance- - - - - - - -	3.6.2	4.6.3
Dielectric withstanding voltage- - -	3.6.3	4.6.4
Insertion and withdrawal force - - -	3.6.4	4.6.5

4.5.1.3.3 Disposition of sample units. Sample units which have passed all the group B inspection may be delivered on the contract, if the lot is accepted and the sample units are still within specified electrical tolerances.

4.5.2 Verification of qualification inspection. Verification of qualification inspection shall consist of group C. Except where the results of these inspections show noncompliance with the applicable requirements (see 4.5.2.1.4), delivery of products which have passed groups A and B shall not be delayed pending the results of these verification of qualification inspections.

4.5.2.1 Group C inspection. Group C inspection shall consist of the inspections specified in table III, in the order shown. Group C inspection shall be made on sample units selected from inspection lots which have passed the groups A and B inspections.

4.5.2.1.1 Sampling plan. Ten sample units of each basic type shall be selected at random from items produced every 24- or 36-months, as applicable (see 4.4.4). The sample units shall be subdivided as specified for each subgroup in table III.

4.5.2.1.2 Failures. If any sample units fail to pass group C inspection, the entire sample shall be considered to have failed and if the contractor has been inspecting on a 36-month basis as permitted in 4.4.4, he shall revert to a 24-month testing basis. He can return to a 36-month inspection basis by meeting requirements of 4.5.2.1.1.

Source: https://assist.dla.mil -- Downloaded: 2016-11-12T22:55Z
Check the source to verify that this is the current version before use.

TABLE III. Group C inspection.

Inspection	Requirement paragraph	Test paragraph
Subgroup 1 (sample units 1-6)		
Thermal shock - - - - - - - - - - - -	3.6.5	4.6.6
Vibration - - - - - - - - - - - - - -	3.6.7	4.6.8
Shock (specified pulse) - - - - - -	3.6.8	4.6.9
Moisture resistance - - - - - - - -	3.6.6	4.6.7
Subgroup 2 (sample units 7-10)		
Spring life - - - - - - - - - - - - -	3.6.9	4.6.10
Water seal (when specified) - - - -	3.6.10	4.6.11
Salt spray (corrosion)- - - - - - -	3.6.11	4.6.12
Frame strength (when specified) - -	3.6.12	4.6.13

4.5.2.1.3 Disposition of sample units. Sample units which have been subjected to group C inspection shall not be delivered on the contract.

4.5.2.1.4 Noncompliance. If a sample fails to pass group C inspection, the manufacturer shall notify the qualifying activity and the cognizant inspection activity of such failure and take corrective action on the materials or processes, or both, as warranted, and on all units of product which can be corrected and which were manufactured under essentially the same conditions, with essentially the same materials, processes, etc, and which are considered subject to the same failure. Acceptance and shipment of the product shall be discontinued until corrective action, acceptable to the qualifying activity has been taken. After the corrective action has been taken, group C inspection shall be repeated on additional sample units (all inspection, or the inspection which the original sample failed, at the option of the qualifying activity). Groups A and B inspection may be reinstituted; however, final acceptance and shipment shall be withheld until the group C inspection has shown that the corrective action was successful. In the event of failure after reinspection, information concerning the failure shall be furnished to the cognizant inspection activity and the qualifying activity.

4.5.3 Inspection of packaging. Sample packages and packs and the inspection of the preservation packing and marking for shipment and storage shall be in accordance with the requirements of MIL-C-55330.

4.6 Methods of inspection.

4.6.1 Visual and mechanical inspection (see 3.1, 3.4, 3.5, 3.7, and 3.8). Jacks shall be inspected to verify that the materials, screw threads, physical dimensions, marking, and workmanship are in accordance with the applicable requirements. Physical dimensions of tip and ring shall be measured while a mating plug is inserted in the jack.

Source: https://assist.dla.mil -- Downloaded: 2016-11-12T22:55Z
Check the source to verify that this is the current version before use.

4.6.2 Contact resistance (see 3.6.1). Jacks shall be tested in accordance with method 307 of MIL-STD-202. The following details shall apply:

a. Method of connection - Applicable mating plug (see table IV).
b. Test current - 100 ±2 milliamperes direct current.
c. Maximum open-circuit test voltage - Approximately 6 volts.
d. Number of activations prior to measurement - Six, using applicable mating plug (see table IV) or a dimensionally equivalent brass plug.
e. Number of test activations - One.
f. Number of measurements per activation - Measure between each jack terminal and the corresponding plug terminal, at the point of normal connection, between all sets of local contacts which make upon insertion of the plug, and between all sets of local contacts which are normally closed.

4.6.3 Insulation resistance (see 3.6.2). Jacks shall be tested in accordance with method 302 of MIL-STD-202. The following details shall apply

a. Special preparations - Use applicable test plug (see 3.1).
b. Points of measurement - Between mutually insulated terminals of the jack before insertion of the plug, and between normally closed local contacts after insertion of the plug.
c. Test condition letter - A.

4.6.4 Dielectric withstanding voltage (see 3.6.3). Jacks shall be tested in accordance with method 301 of MIL-STD-202. The following details shall apply·

a. Magnitude of test voltage and nature of potential - 500 volts ac.
b. Duration of application - For qualification inspection, the test voltage shall be applied at a rate of 100 volts per second. For quality conformance inspection, the voltage may be applied instantaneously and shall be maintained for at least 5 seconds.
c. Points of application - Between mutually insulated terminals of the jack.

4.6.5 Insertion and withdrawal forces (see 3.6.4). The specified test plug (see 3.1) conforming to the applicable figure (see figures 1 to 6, inclusive) shall be used. The maximum force required to insert and withdraw the plug shall be measured as follows: The axis of the plug shall be alined with the axis of the jack bushing. A straight thrust shall then be applied gradually in a direction along the axis of the plug until it is completely inserted in the jack; a straight pull shall then be applied gradually in a direction along the axis of the plug until it is completely separated from the jack.

4.6.6 Thermal shock (see 3.6.5). Jacks shall be tested in accordance with method 107 of MIL-STD-202. The following details and exception shall apply:

a. Special mounting - The applicable mating plug (see table IV) shall be inserted into the jack and shall remain inserted in the jack throughout the test.
b. Test condition letter - A.
c. Examination after cycling - Jacks shall be examined for cracking, warping, and delamination of the insulation, and legibility of marking. Screw-on shells (where used) shall be removed and replaced without the use of tools other than a screwdirver inserted in the slot in the end of the metal portion of the jack.

4.6.7 Moisture resistance (see 3.6.6). Jacks shall be tested in accordance with method 106 of MIL-STD-202. The following details and exceptions shall apply:

a. Mounting - Cord-mounting jacks shall be supported by wires connected in the normal manner to their terminals; the wires shall conform to type MW of MIL-W-76 and shall be polyvinylchloride insulated. All other jacks shall be mounted by normal mounting means, using brass hardware, on a vertical silver-plated brass or stainless-steel panel, the panel shall be insulated from the test chamber by ceramic insulators, or equal

Source: https://assist.dla.mil -- Downloaded: 2016-11-12T22:55Z
Check the source to verify that this is the current version before use.

b. Initial measurements - The insulation resistance shall be measured as specified in 4.6.3.
c. Subcycle - Cord-mounting jacks shall not be subjected to steps 7a and 7b; they shall remain in the humidity chamber until the next cycle begins.
d. Polarization voltage - Polarization voltage shall be applied between at least one pair of mutually insulated terminals of 50 percent of the jacks. No potential shall be applied to the remaining 50 percent of the jacks.
e. Final measurements:
   1. At high humidity - Insulation resistance shall be measured as specified in 4.6.3
   2. After drying period - The jacks shall be conditioned at a relative humidity of 50 ±5 percent for 24 hours, after which the insulation resistance, contact resistance and dielectric withstanding voltage shall be measured as specified in 4.6.3, 4.6.2, and 4.6.4, respectively.

4.6.8 Vibration, high frequency (see 3.6.7). Jacks shall be tested in accordance with method 204 of MIL-STD-202. The following details and exceptions shall apply:

a. Method of mounting - Jacks shall be mounted with their axis in a horizontal plane.
b. Test condition letter - B.
c. Direction of motion - Along the axis of the jack, and then perpendicular to the axis of the jack.
d. Measurements during vibration - Each jack shall be monitored for electrical continuity, using a test current of 100 ±2 milliamperes, dc. Loss of continuity for a period longer than 10 microseconds constitutes a failure.
e. Measurements after vibration - Contact resistance shall be measured as specified in 4.6.2.
f. The vibration test shall be performed on jacks, both unmated (without the mating plug) and mated (with the mating plug).
g. Mating plug - The applicable mating plug (see table IV) shall have a 3-foot ±3 inch length of cord, of the type normally used with the plug, attached and hanging free. The mating plug shall be inserted into the jack and shall remain inserted in the jack throughout the mated portion of the test.

4.6.9 Shock (specified pulse)(see 3.6.8). Jacks shall be tested in accordance with method 213 of MIL-STD-202. The following details shall apply:

a. Mounting - Jacks shall be mounted on a vertical test plate.
b. Test condition letter - H.

The test shall then be repeated with the jacks mounted on a horizontal plate.

4.6.10 Spring life (see 3.6.9). The specified test plug (see 3.1) conforming to the applicable figure (see figures 1 to 7 inclusive) shall be used. The plug should be lubricated, but the lubricant shall be removed from the plug and jack at the completion of the last cycle of insertion and withdrawal. The jacks shall be subjected to 5,000 cycles of complete insertion and withdrawal of the plug. The jacks shall then be examined for damage and loosening of parts, after which the insertion and withdrawal forces, dielectric withstanding voltage, and contact resistance shall be tested as specified in 4.6.5, 4.6.4, and 4.6.2, respectively. The jacks shall then be subjected to an additional 5,000 cycles of complete insertion and withdrawal of the plug and then shall be examined for damage and loosening of parts, after which the contact resistance shall be tested as specified in 4.6.2. For qualification inspection, the rate of cycling shall not exceed 600 cycles per hours. For quality conformance inspection, the rate of cycling may be 1,200 cycles per hour.

4.6.11 Water seal (see 3.6.10). The jacks shall be mounted by normal mounting means at a depth of 6 feet in a tank, with the body of the jacks outside the tank and the bushing end of the jacks within the tank. The jacks shall then be subjected to a 6-foot minimum head of water (in the tank) for a period of 24 hours.

Source: https://assist.dla.mil -- Downloaded: 2016-11-12T22:55Z
Check the source to verify that this is the current version before use.

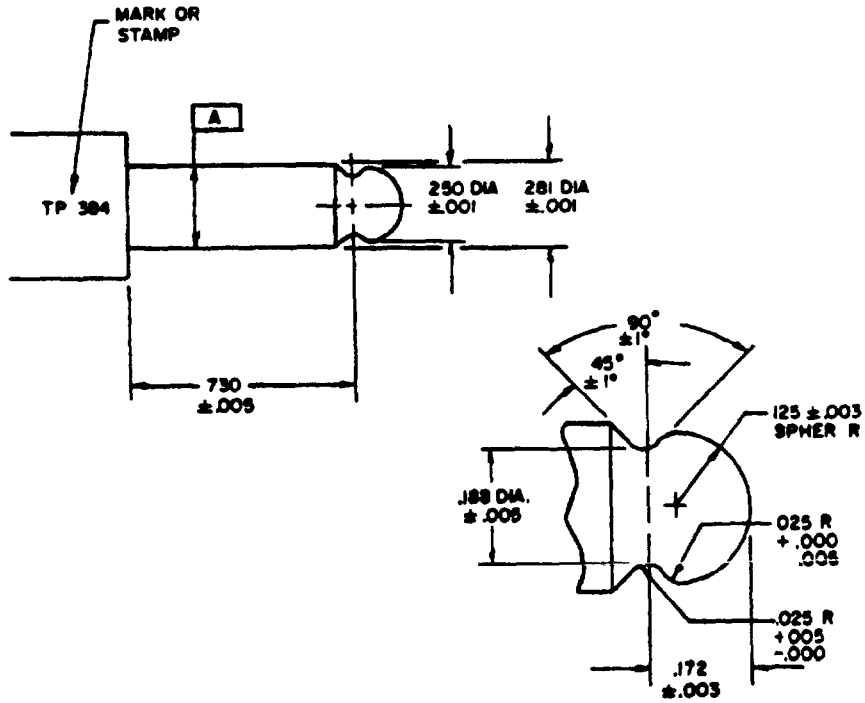

INCHES	MM	INCHES	MM	INCHES	MM
.0003	.008	.033	.84	.375	9.52
.002	.05	.143	3.63	.675	17.14
.003	.08	.170	4.32	.875	22.22
.005	.13	.210	5.33	.900	22.86
.010	.25	.250	6.35	1.144	29.06

FIGURE 1. Test plug TP51.

Source: https://assist.dla.mil -- Downloaded: 2016-11-12T22:55Z
Check the source to verify that this is the current version before use.

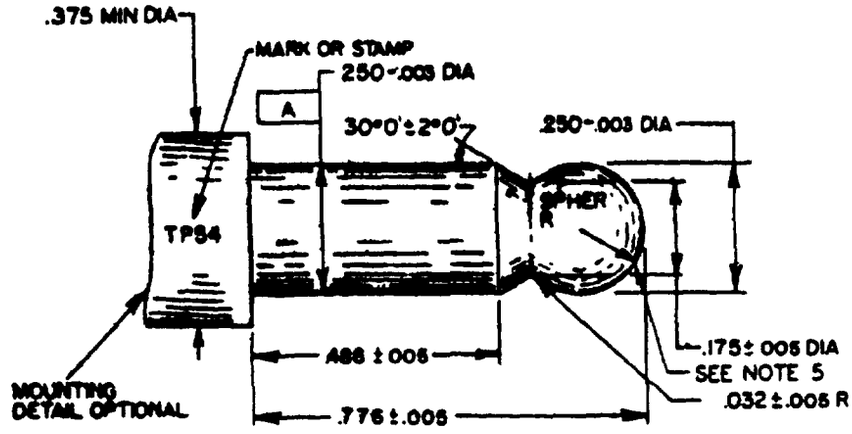

INCHES	MM	INCHES	MM
.0003	.008	.175	4.44
.002	.05	.250	6.35
.003	.08	.375	9.52
.005	.13	.486	12.34
.032	.81	.776	19.71

NOTES:
1. Dimensions are in inches.
2. Metric equivalents are given for general information only and are based upon 1.00 inch = 25.4 mm.
3. Finger shall be hardened to Rockwell C 60-62, polished, and then hard-chromium plated to .0003 (.008 mm) maximum thickness.
4. All dimensions before plating.
5. Concentricity shall be .002 (.05 mm) total indicator reading on finger diameter A.

FIGURE 2. Test plug TP54.

Source: https://assist.dla.mil -- Downloaded: 2016-11-12T22:55Z
Check the source to verify that this is the current version before use.

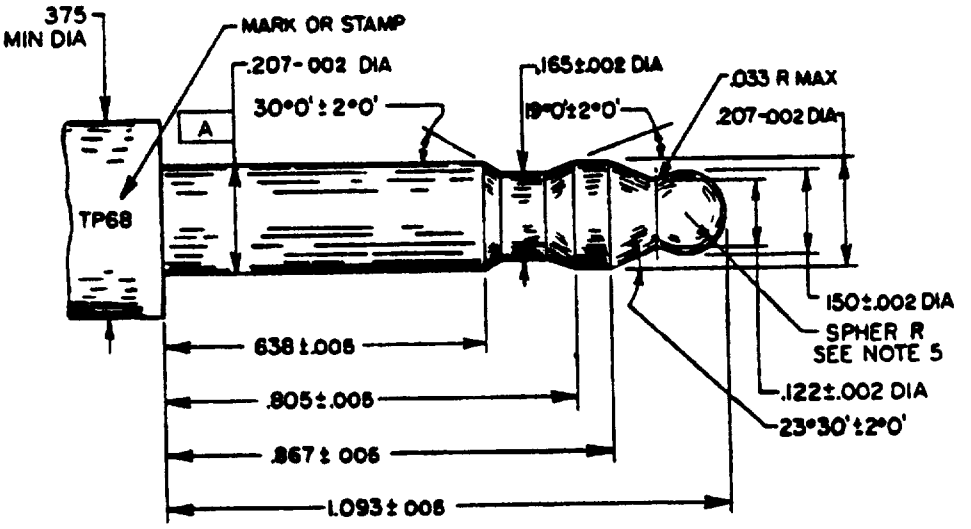

INCHES	MM	INCHES	MM	INCHES	MM
.0003	.008	.010	.25	.375	9.52
.002	.05	.032	.81	.922	23.42
.003	.08	.175	4.44	1.218	30.94
.005	.13	.250	6.35		

NOTES:
1. Dimensions are in inches.
2. Metric equivalents are given for general information only and are based upon 1.00 inch = 25.4 mm.
3. Finger shall be hardened to Rockwell C 60-62, polished, and then hard-chromium plated to .0003 (.008 mm) maximum thickness.
4. All dimensions before plating.
5. Concentricity shall be .002 (.08 mm) total indicator reading on finger diameter A.

FIGURE 3. Test plug TP55.

Source: https://assist.dla.mil -- Downloaded: 2016-11-12T22:55Z
Check the source to verify that this is the current version before use.

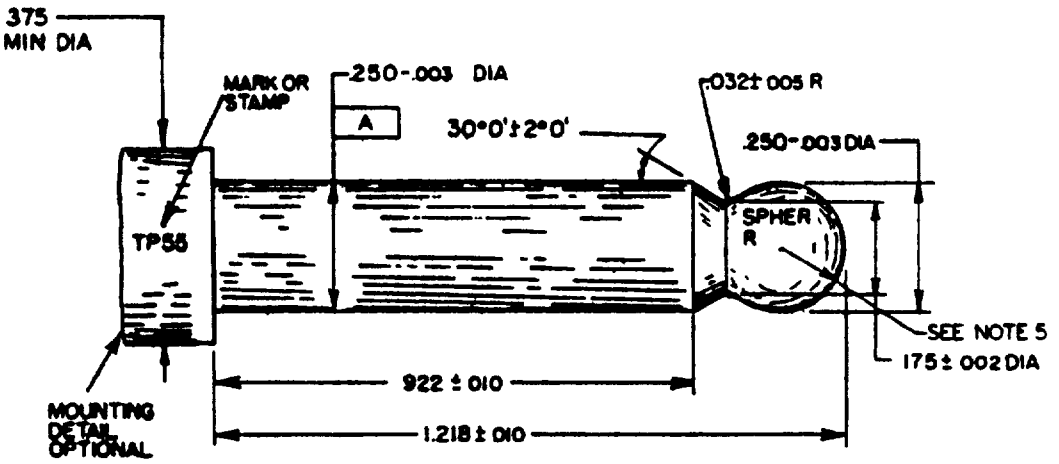

INCHES	MM	INCHES	MM	INCHES	MM
.0003	.008	.150	3.81	.805	20.45
.002	.05	.165	4.19	.867	22.02
.005	.13	.207	5.26	1.093	27 76
.033	.84	.375	9.52		
.122	3.10	.638	16.21		

NOTES:
1. Dimensions are in inches.
2. Metric equivalents are given for general information only and are based upon 1.00 inch = 25.4 mm.
3. Finger shall be hardened to Rockwell C 60-62, polished, and then hard-chromium plated to .0003 (.008 mm) maximum thickness.
4. All dimensions before plating.
5. Concentricity shall be .002 (.05 mm) total indicator reading on finger diameter A.

FIGURE 4. Test plug TP68.

Source: https://assist.dla.mil -- Downloaded: 2016-11-12T22:55Z
Check the source to verify that this is the current version before use.

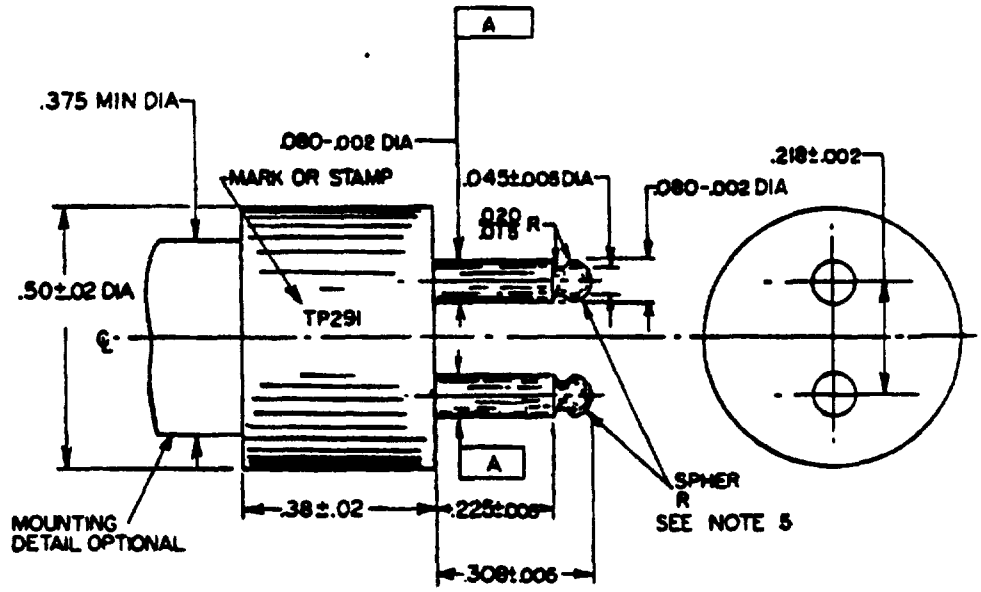

INCHES	MM	INCHES	MM	INCHES	MM
.0003	.008	.045	1.14	.375	9.52
.002	.05	.080	2.03	.38	9.7
.005	.13	.218	5.54	.50	12.7
.015	.38	.225	5.72		
.020	.51	.308	7.82		

NOTES:
1. Dimensions are in inches.
2. Metric equivalents are given for general information only and are based upon 1.00 inch = 25.4 mm.
3. Finger shall be hardened to Rockwell C 60-62, polished, and then hard-chromium plated to .0003 (.008 mm) maximum thickness.
4. All dimensions before plating.
5. Concentricity shall be .002 (.05 mm) total indicator reading on finger diameter A.

FIGURE 5. Test plug TP291.

Source: https://assist.dla.mil -- Downloaded: 2016-11-12T22:55Z
Check the source to verify that this is the current version before use.

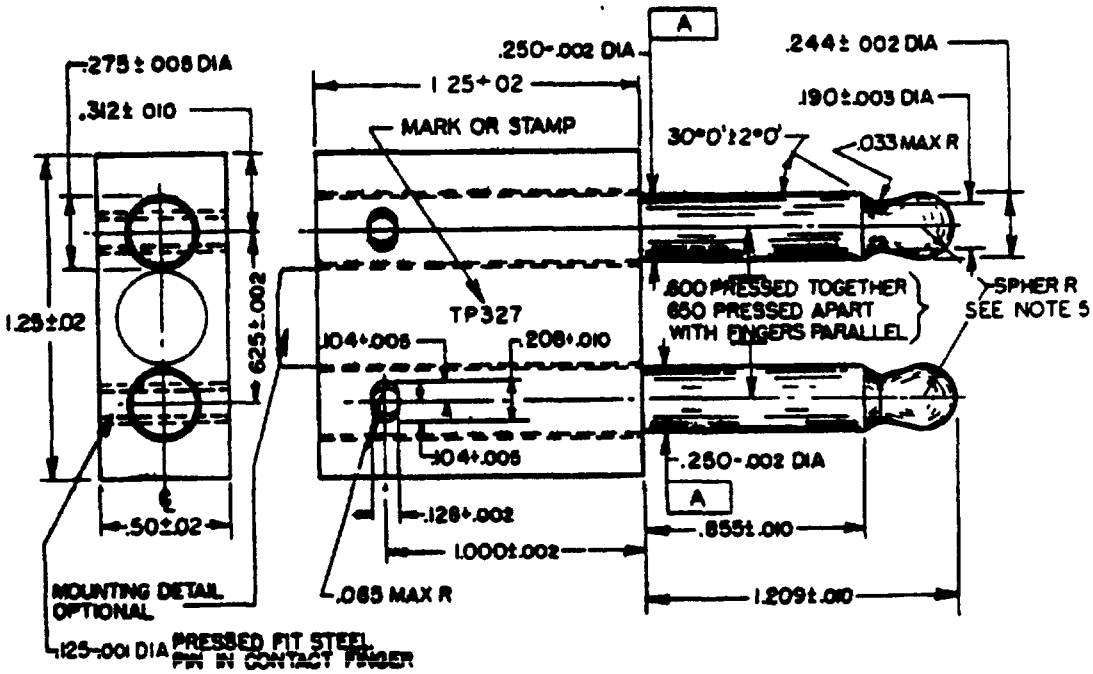

INCHES	MM	INCHES	MM	INCHES	MM	INCHES	MM	INCHES	MM
.0003	.008	.02	.5	.190	4.83	.50	12.7	1.209	30.71
.001	.03	..033	.84	.208	5.28	.600	15.24	1.25	31.8
.002	.05	.065	1.65	.244	6.20	.625	15.88		
.003	.08	.104	2.64	.250	6.35	.650	16.51		
.005	.13	.125	3.18	.275	6.98	.855	21.72		
.010	.28	.128	3.25	.312	7.92	1.000	25.40		

NOTES:
1. Dimensions are in inches.
2. Metric equivalents are given for general information only and are based upon 1.00 inch = 25.4 mm.
3. Finger shall be hardened to Rockwell C 60-62, polished, and then hard-chromium plated to .0003 (.008 mm) maximum thickness.
4. All dimensions before plating.
5. Concentricity shall be .002 (.05 mm) total indicator reading on finger diameter A

FIGURE 6. Test plug TP327.

Source: https://assist.dla.mil -- Downloaded: 2016-11-12T22:55Z
Check the source to verify that this is the current version before use.

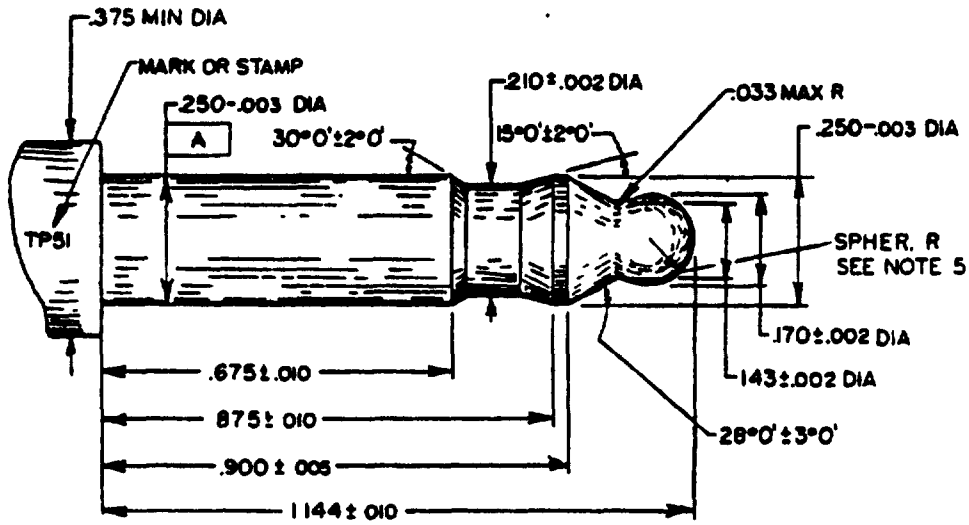

INCHES	MM	INCHES	MM
.0003	.008	.172	4.37
.001	.03	.188	4.78
.003	.08	.250	6.35
.005	.13	.281	7.14
.025	.64	.730	18.54
.125	3.18		

NOTES:
1. Dimensions are in inches.
2. Metric equivalents are given for general information only and are based upon 1.00 inch = 25.4 mm.
3. Finger shall be hardened to Rockwell C 60-62, polished, and then hard-chromium plated to .0003 (.008 mm) maximum thickness.
4. All dimensions before plating.
5 Concentricity shall be .002 (.05 mm) total indicator reading on finger diameter A.

FIGURE 7. Test plug TP384

Source: https://assist.dla.mil -- Downloaded: 2016-11-12T22:55Z
Check the source to verify that this is the current version before use.

4.6.12 Salt spray (corrosion) (see 3.6.11). Jacks shall be tested in accordance with method 101 of MIL-STD-202 The following details shall apply:

a. Test condition letter - B.
b. Measurements after exposure - After a 1-hour drying period at room temperature, contact resistance shall be measured as specified in 4.6.2.
c. Unless otherwise specified, 5 percent salt solution.

4.6.13 Frame strength (see 3.6.12) unless otherwise specified (see 3.1). Jacks shall be mounted on a suitable panel, with the long axis of the jack horizontal, and the heads of the pileup clamping screws facing upward. A 30-pound minimum load, freely suspended between the pileup clamping screws, shall be applied for 5 minutes.

4.6.14 Strain relief (see 3.6.13). While terminated to the specified cable, a force of 50 pounds minimum shall be applied in a longitudinal direction for a minimum of five minutes.

4.6.15 Contact spring pressure (see 3.6.14).

4.6.15.1 Mated jacks (see 3.6.14.1). The specified test plug (see 3.1) conforming to the applicable figure (see figures 1 to 7, inclusive) shall be used. Each jack shall be monitored for electrical continuity, using a test current of 100 ±2 milliamperes, dc. A force of 16 ±(0,1) ounces shall be applied in a direction perpendicular to the jack axis. Continuation of continuity for a period longer than ten microseconds constitutes a failure.

4.6.15.2 Unmated jacks (see 3.6.14.2). While in the unmated state, each contact spring shall be subjected to a force of 12 ±(0,1) ounces applied in a direction perpendicular to the jack axis away from the jack body.

4.6.16 Contact spring overtravel (see 3.6.15). The specified test plug (see 3.1) conforming to the applicable figure (see figures 1 to 7, inclusive) shall be used. During the insertion of the test plug, the flexing of the contact spring shall be measured.

4.6.17 Static load (see 3.6.16). A static load of 150 pounds minimum shall be applied to the jack at approximately midpoint for one minute minimum. The jack shall be resting in a horizontal position on a concrete floor or rigid metal surface. The load shall be applied perpendicular to the longitudinal axis of the jack through a rigid bar 0.50 ±0.25 wide placed tangent to the shell surface and parallel to the floor or surface supporting the jack.

4.6.18 Longitudinal pull (see 3.6.17). The specified test plug (see 3.1) conforming to the applicable figure (see figures 1 to 7, inclusive) shall be used. The test plug, when inserted in the jack and subjected to a longitudinal pull of one pound less than the measured withdrawal force shall not render the jack inoperative or cause an open contact (discontinuity) between the plug and jack.

5. PACKAGING

5.1 Packaging requirements. The requirements for packaging shall be accordance with MIL-C-55330

6. NOTES

6.1 Intended use. The telephone jacks covered by this specification are primarily for use in airborne, ground support, and shipboard communications equipment.

Source: https://assist.dla.mil -- Downloaded: 2016-11-12T22:55Z
Check the source to verify that this is the current version before use.

6.2 Ordering data. Procurement documents should specify the following

a. Title, number, and date of this specification.
b. Title, number, and date of the applicable specification sheet, and the complete military part number (see 3.1).
c. Levels of preservation-packaging and packing and marking (see section 5).

6.3 Definitions. See MIL-STD-1353, "Electrical connectors and hardware."

6.4 Qualification. With respect to products requiring qualification, awards will be made only for products which are at the time set for opening of bids, qualified for inclusion in the applicable qualified products list whether or not such products have actually been so listed by that data. The attention of the contractors is called to this requirement, and manufacturers are urged to arrange to have the products that they propose to offer to the Federal Government tested for qualification, in order that they may be eligible to be awarded contracts for the products covered by this specification The activity responsible for the qualified products list is the U.S. Army Electronics Command, AMSEL-PP-EM, Fort Monmouth, NJ 07703; however, information pertaining to qualification of products may be obtained from the Defense Electronics Supply Center (DESC-E), Dayton, Ohio 45444.

6.4.1 Application for qualification. Application for qualification tests shall be made in accordance with "Provisions Governing Qualification" which may be obtained upon application to Commanding Officer, Naval Publications and Forms Center, 5801 Tabor Avenue, Philadelphia, PA 19120.

6.5 Mating plugs. Information on mating plugs is shown in table IV. All jacks listed in the same block of column 1 are applicable for mating with all plugs listed in the corresponding block of column 2.

6.6 Finish colors. Coating will vary in color depending on basic metal alloy and method of manufacture. This variance in color does not alter the performance capabilities of the finish.

6.7 Changes from previous issue. Asterisks are not used in this revision to identify changes with respect to the previous issue, due to the extensiveness of the changes.

6.8 Schematic designations. Schematics show jack contact arrangement designations in accordance with Federal Item Identification Guide A034.

Custodians:
Army - CR
Navy - EC
Air Force - 11

Review activities:
Army - AR, ME, MI,
Navy - AS
Air Force - 85, 99
DLA - ES

User activities:
Army - AV
Navy - MC, OS, SH, YD
Air Force - 17, 19

Preparing activity:
Army - CR

Agent:
DLA - ES

(Project 5935-3026)

Source: https://assist.dla.mil -- Downloaded: 2016-11-12T22:55Z
Check the source to verify that this is the current version before use.

TABLE IV. Jacks and mating plugs.

Jacks		Plugs	
Part number	Type designation	Part number	Type designation
M641/1-1	JJ-018	M642/1-1	PJ-047B
M641/1-2	JJ-019	M642/1-2	PJ-047R
M641/2-1	JJ-016	M642/4-1	PJ-055B
M641/2-2	JJ-017	M642/4-2	PJ-055R
M641/2-3	JJ-024	M642/4-3	PJ-055M
M641/2-4	JJ-025	M642/11-1	PJ-636
M641/2-5	JJ-072		
M641/2-6	JJ-084		
M641/2-7	JJ-085		
M641/2-8	JJ-086		
M641/2-9	JJ-087		
M641/6-1	JJ-094		
M641/12-1	JJ-089		
M641/13-1	JJ-092		
M641/13-2	JJ-093		
M641/13-3	JJ-096		
M641/13-4	JJ-097		
M641/15-1	JJ-098		
M641/15-2	JJ-099		
M641/15-3	JJ-102		
M641/16-1	JJ-104		
M641/16-2	JJ-105		
M641/16-3	JJ-107		
M641/18-1	JJ-134		
M641/3-1	JJ-032	M642/2-1	PJ-061B
M641/3-2	JJ-042	M642/2-2	PJ-061R
M641/3-3	JJ-073		
M641/3-4	JJ-074		
M641/3-5	JJ-075		
M641/3-6	JJ-077		
M641/3-7	JJ-078		
M641/9-1	JJ-079		
M641/9-2	JJ-081		
M641/9-3	JJ-082		
M641/9-4	JJ-106		
M641/14-1	JJ-095		
M641/14-2	JJ-101		
M641/14-3	JJ-103		
M641/4-1	JJ-026	M642/3-1	1/ PJ-054B
M641/4-2	JJ-026	M642/3-2	1/ PJ-054R
		M642/10-1	PJ-540B
		M642/10-2	PJ-540R
M641/5-1	JJ-033	M642/5-1	PJ-058
M641/10-1	JJ-083	M642/8-1	PJ-309
M641/17-1	JJ-133		
M641/7-1	JJ-048	M642/6-1	PJ-291
M641/7-2	JJ-048		
M641/8-1	JJ-065	M642/7-1	PJ-292
M641/8-2	JJ-065		
M641/2-8	2/ JJ-086		
M641/11-1	JJ-088	M642/9-1	PJ-327

Source: https://assist.dla.mil -- Downloaded: 2016-11-12T22:55Z
Check the source to verify that this is the current version before use.

TABLE IV. Jacks and mating plugs - Continued

Jacks		Plugs	
Part number	Type designation	Part number	Type designation
M641/19-9	JJ-805		
M641/20-1 thru M641/20-8	N/A	M641/13-1 thru M642/13-4	PJ-711 PJ-778
M641/21-12	N/A		
M641/22-1	U-385/U	M642/14-1	U-384/U

1/ Types PJ-054B and PJ-054R can be replaced by types PJ-540B and PJ-540R, respectively. The cord-entrance dimension for PJ-054B and PJ-054R is 0.250 inch, for PJ-540B and PJ-540R, the cord-entrance dimension is 0.281 inch.

2/ Two JJ-086 are needed for use with PJ-327

Source: https://assist.dla.mil -- Downloaded: 2016-11-12T22:55Z
Check the source to verify that this is the current version before use.

INSTRUCTIONS: In a continuing effort to make our standardization documents better, the DoD provides this form for use in submitting comments and suggestions for improvements. All users of military standardization documents are invited to provide suggestions. This form may be detached, folded along the lines indicated, taped along the loose edge *(DO NOT STAPLE)*, and mailed. In block 5, be as specific as possible about particular problem areas such as wording which required interpretation, was too rigid, restrictive, loose, ambiguous, or was incompatible, and give proposed wording changes which would alleviate the problems. Enter in block 6 any remarks not related to a specific paragraph of the document. If block 7 is filled out, an acknowledgement will be mailed to you within 30 days to let you know that your comments were received and are being considered

NOTE This form may not be used to request copies of documents, nor to request waivers, deviations, or clarification of specification requirements on current contracts Comments submitted on this form do not constitute or imply authorization to waive any portion of the referenced document*(s)* or to amend contractual requirements.

(Fold along this line)

(Fold along this line)

DEPARTMENT OF THE ARMY

NO POSTAGE NECESSARY IF MAILED IN THE UNITED STATES

OFFICIAL BUSINESS
PENALTY FOR PRIVATE USE $300

BUSINESS REPLY MAIL
FIRST CLASS PERMIT NO 12062 WASHINGTON D C

POSTAGE WILL BE PAID BY THE DEPARTMENT OF THE ARMY

COMMANDING OFFICER
U.S. ARMY ELECTRONICS COMMAND
ATTN: AMSEL-TD-S
FORT MONMOUTH, N.J. 07703

Source: https://assist.dla.mil -- Downloaded: 2016-11-12T22:55Z
Check the source to verify that this is the current version before use.

(TO DETACH THIS FORM, CUT ALONG THIS LINE.)

STANDARDIZATION DOCUMENT IMPROVEMENT PROPOSAL

(See Instructions – Reverse Side)

1. DOCUMENT NUMBER	2. DOCUMENT TITLE

3a. NAME OF SUBMITTING ORGANIZATION	4. TYPE OF ORGANIZATION *(Mark one)*
	☐ VENDOR
	☐ USER
b. ADDRESS *(Street, City, State, ZIP Code)*	☐ MANUFACTURER
	☐ OTHER *(Specify)* _____

5. PROBLEM AREAS

a. Paragraph Number and Wording.

b. Recommended Wording

c. Reason/Rationale for Recommendation

6. REMARKS

7a. NAME OF SUBMITTER *(Last, First, MI)* – Optional	b. WORK TELEPHONE NUMBER *(Include Area Code)* – Optional
c. MAILING ADDRESS *(Street, City, State, ZIP Code)* – Optional	8. DATE OF SUBMISSION *(YYMMDD)*

DD FORM 1426, 82 MAR — PREVIOUS EDITION IS OBSOLETE.

Source: https://assist.dla.mil -- Downloaded: 2010-11-12T22:55Z
Check the source to verify that this is the current version before use.