METRIC

MIL-F-49291/7A
30 July 1992
SUPERSEDING
DOD-F-49291/7(NAVY)
11 May 1989

MILITARY SPECIFICATION SHEET

FIBER, OPTICAL, SINGLE-MODE, DISPERSION UNSHIFTED, RADIATION HARDENED (METRIC)

This specification is approved for use by all Departments and Agencies of the Department of Defense.

The requirements for acquiring the product described herein shall consist of this specification sheet and the issue of the following specification listed in that issue of the Department of Defense Index of Specifications and Standards (DODISS) specified in the solicitation: MIL-F-49291

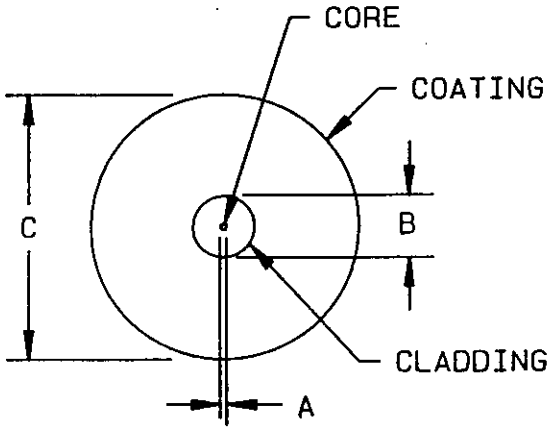

PIN	Dimensions	
	B	C
M49291/7-01	125 ±1	250 ±15

NOTE: Dimensions are in micrometers.

FIGURE 1. Dimensions and configuration of optical fiber construction.

DISTRIBUTION STATEMENT A. Approved for public release; distribution is unlimited.

Source: https://assist.dla.mil -- Downloaded: 2016-12-10T07:39Z
Check the source to verify that this is the current version before use.

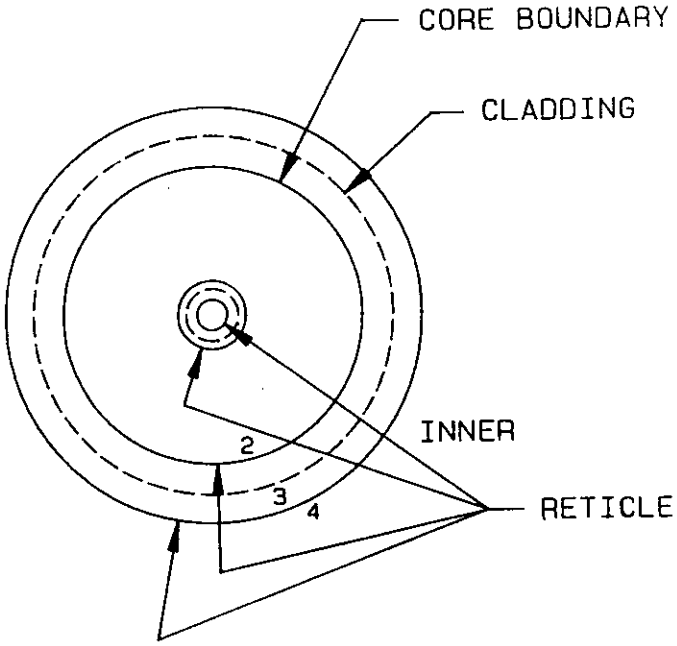

Circle	Diameter of circle
First	124 micrometers
Second	126 micrometers

NOTE: Dimensions are in micrometers.

FIGURE 2. Tolerance fields.

Source: https://assist.dla.mil -- Downloaded: 2016-12-10T07:39Z
Check the source to verify that this is the current version before use.

REQUIREMENTS:

Classification:
Type: II.
Class: 5.
Composition: A.
Size: II.
Wavelength: D.

Dimensions and configuration:

Diameter: See figures 1 and 2. Diameter requirements are based on selecting fibers with end-point tolerances of 125 ±1 micrometers from production with a 125 ±2 micrometers tolerances.

Ovality:
Core: Not applicable.
Cladding: 2 percent.

Offset:
Core-to-cladding: ≤ 1 micrometer.
Fiber-to-coating: ≥ 10.5 micrometers (OCCR ≥ 0.7).

Maximum percent of buffer diameter change at the splice points: Not applicable.

Mode field diameter: Nominal range 8.5 to 10 micrometers, tolerance of product ±0.7 micrometers.

Splices: Not allowed.

Tensile strength (proof test): 690 MPa.

Fiber mass/unit length (kg/km): 0.1 kg/km maximum.

Change in optical transmittance: Measurements made at 1310 nm ±20 nm.

Attenuation rate:
0.40 dB/km at 1310 nm ±20 nm.
0.30 dB/km at 1550 nm ±20 nm.

Attenuation uniformity: Applicable.

Macrobend attenuation: Applicable.

Storage temperature: Applicable.

Fluid immersion aging: Not applicable.

Dynamic tensile strength: Applicable.

Torsion: Applicable.

Flexure: Applicable.

Chromatic dispersion: ≤ 3.2 ps/nm/km at 1310 nm, ≤ 22 ps/nm/km at 1550 nm.

Temperature range:
Operating: -54°C to +85°C.
Storage: -62°C to +85°C.

Fungus test: Applicable.

Source: https://assist.dla.mil -- Downloaded: 2016-12-10T07:39Z
Check the source to verify that this is the current version before use.

Nuclear radiation resistance: The nuclear radiation resistance characteristics of this optical fiber are classified and shall be obtained from the qualifying activity. Application to receive these requirements must be made through the US Naval Sea Systems Command, ATTN: SEA 06KR22, Washington, DC 20362. Information concerning security clearance classification and "need to know" must be detailed in the request.

PIN (see figure 1 and table I): M49291/7-01.

Table I. Supersesion data.

PIN	Superseding
M49291/7-01	M49291/01-007 1/

1/ PIN is as shown in MIL-F-49291/7(NAVY)

Revision letters are not used to denote changes due to the extensiveness of the changes.

CONCLUDING MATERIAL

Custodians:
Army - CR
Navy - SH
Air Force - 85
NASA - NA

Review activities:
Army - MI, SC
Navy - AS
DLA - ES

User activity:
Air Force - 17

Preparing activity:
Navy - SH

Agent:
DLA - ES

(Project 6010-0036-8)

Source: https://assist.dla.mil -- Downloaded: 2016-12-10T07:39Z
Check the source to verify that this is the current version before use.