INCH - POUND

MIL-PRF-27G
19 May 2014
SUPERSEDING
MIL-PRF-27F
25 June 1999

PERFORMANCE SPECIFICATION

TRANSFORMERS AND INDUCTORS (AUDIO, POWER, AND HIGH-POWER PULSE), GENERAL SPECIFICATION FOR

This specification is approved for use by all Departments and Agencies of the Department of Defense.

1. SCOPE

1.1 Scope. This specification covers the general requirements for power transformers, power inductors, audio transformers, audio inductors, high power pulse transformers, charging inductors, saturable transformers and saturable inductors for use in electronic and communication equipment. This specification covers transformers and inductors weighing 300 pounds or less or having root-mean-square (rms) test-voltage ratings 0f 50,000 volts or less, and also high-power pulse transformers where the peak pulse power is greater than 5 watts. Transformer and inductor assemblies incorporating any other active or passive components do not come within the scope of this specification.

1.2 Classification. Transformers covered by this specification are classified according to product levels (see 1.2.1).

1.2.1 Product level . This specification makes provisions for three product levels: level C, for high reliability commercial/industrial type applications; level M, for general purpose military applications; and level T, for high reliability critical military applications. These product levels are coded into the part or identifying number (PIN) (see 3.1). Examples of the PIN's are shown below.

M27/1-01C - denotes the C level part with a C code on the end of the PIN.

M27/1-01 - denotes the M level part. (NOTE: This PIN system that was in use in MIL-T-27E and previous revisions of MIL-T-27.)

M27/1-01T - denotes the T level part with a T code on the end of the PIN.

1.2.2 Dash number. The dash number which uniquely identifies the transformer or inductor.

1.2.3 Grade. The grade is identified by a single digit denoting metal encased, encapsulated, or open-type construction, and the ability of the transformers or inductors to withstand the environmental tests of table I.

1.2.3.1 Grade 4. Grade 4 units are sealed, metal encased with either separately fabricated headers or terminals or both. This grade does not include units which are encapsulated in a metal shell with an opening in either end or side of the shell, or with insulated lead wires extending through the metal shell.

Comments, suggestions, or questions on this document should be addressed to DLA Land and Maritime ATTN: DLA Land and Maritime-VAT, P.O. Box 3990, Columbus, Ohio 43218-3990, or email to Transformer@dla.mil. Since contact information can change, you may want to verify the currency of this address information using the ASSIST Online database at https://assist.dla.mil.

Source: https://assist.dla.mil -- Downloaded: 2016-11-03T19:01Z
Check the source to verify that this is the current version before use.

1.2.3.2 Grade 5. Grade 5 units are encapsulated, including molded or embedded constructions, and units with a metal shell, open at one or both ends and filled with encapsulant material.

1.2.3.3 Grade 6. Grade 6 units are open type and are generally intended for subsequent potting, molding, or embedment in an assembly with or without component parts.

TABLE I. Grade.

Test	Grade 4 metal encased	Grade 5 encapsulated	Grade 6 open type
Seal	X	- - -	- - -
Thermal shock	X	X	X
Immersion	X	X	- - -
Moisture resistance	X	X	- - -
Vibration	X	X	X
Shock	X	X	X
Flammability	- - -	X	- - -
Salt Atmosphere (when specified)	X	X	- - -

1.2.4 Class. The class is identified by a single letter in accordance with table II, and denotes the maximum operating temperature (temperature rise (see 4.7.13) plus maximum ambient temperature (see 6.10.2.3).

TABLE II. Class.

Symbol	Maximum operating temperature
	°C
Q	85
R	105
S	130
V	155
T	170
U	170, as specified (see 3.1)

2. APPLICABLE DOCUMENTS

2.1 General. The documents listed in this section are specified in sections 3 and 4 of this specification. This section does not include documents cited in other sections of this specification or recommended for additional information or as examples. While every effort has been made to ensure completeness of this list, document users are cautioned that they must meet all specified requirement documents cited in section 3 and 4 of this specification, whether or not they are listed.

2.2 Government documents.

2.2.1 Specifications, standards, and handbooks. The following specifications, standards, and handbooks form a part of this document to the extent specified herein. Unless otherwise specified, the issues of these documents are those listed cited in the solicitation or contract.

DEPARTMENT OF DEFENSE SPECIFICATIONS

(See supplement 1 for a list of specification sheets.)

FEDERAL STANDARDS

FED-STD-H28 - Screw-Thread Standards for Federal Services.
FED-STD-595/26307 - Gray, Semigloss

DEPARTMENT OF DEFENSE STANDARDS

MIL-STD-202 - Test Methods, for Electronic and Electrical Component Parts.
MIL-STD-810 - Environmental Test Methods.
MIL-STD-1285 - Marking of Electrical and Electronic Parts.

(Copies of these documents are available online at http://quicksearch.dla.mil or from the Standardization Document Order Desk, 700 Robbins Avenue, Building 4D, Philadelphia, PA 19111-5094.)

Source: https://assist.dla.mil -- Downloaded: 2016-11-03T19:01Z
Check the source to verify that this is the current version before use.

2.3 Non-Government publications. The following documents form a part of this document to the extent specified herein. Unless otherwise specified, the issues of the documents which are those listed in the solicitation or contract.

ASSOCIATION CONNECTING ELECTRONICS INDUSTRIES

J-STD-004 - Requirements for Soldering Fluxes.
J-STD-006 - Requirements for Electronic Grade Solder Alloys and Fluxed and Non-Fluxed Solder Solders for Electronic Soldering Applications.

(The private sector and other Government agencies may purchase copies from the Association Connecting Electronics Industries, http://www.ipc.org).

AMERICAN NATIONAL STANDARDS INSTITUTE (ANSI)

ANSI/NCSL Z540.3 - Calibration Laboratories and Measuring and Test Equipment – General Requirements.

(Copies of this document are available from http://www.ncsli.org/ or from the National Conference of Standards Laboratories(NCSL) International, 1800 30th Street, Suite 305, Boulder, CO 80301-1026.)

INTERNATIONAL ORGANIZATION FOR STANDARDIZATION

ISO 10012 - Measurement Management Systems -- Requirements for Measurement Processes and Measuring

(Copies of these documents are available online at http://www.iso.org)

(Non-Government standards and other publications are normally available from the organizations that prepare or distribute the documents. These documents also may be available in or through libraries or other informational services.)

2.4 Order of precedence. In the event of a conflict between the text of this specification and the references cited herein, the text of this specification takes precedence. Nothing in this document, however, supersedes applicable laws and regulations unless a specific exemption has been obtained.

3. REQUIREMENTS

3.1 Specification sheets. The individual item requirements shall be as specified herein and in accordance with the applicable specification sheet. In the event of any conflict between the requirements of this specification and the specification sheet, the latter shall govern.

3.2 Qualification. The transformers and inductors covered by specification sheets furnished under this specification shall be products that are manufactured by a manufacturer authorized by the qualifying activity for listing on the applicable qualified products list before contract award (see 4.4 and 6.3).

3.3 Materials. The materials shall be as specified herein; however, when a definite material is not specified, a material shall be used which will enable the transformers and inductors to meet the performance requirements of this specification. Acceptance or approval of any constituent material shall not be construed as a guaranty of the acceptance of the finished product.

3.3.1 Flammable materials. Insofar as practicable, materials used in the construction of the transformers and inductors shall be nonflammable and non-explosive.

3.3.2 Corrosive materials. Corrosive materials used in any of the manufacturing processes shall be removed or neutralized so that no corrosion will result from such use. Insofar as practicable, materials used in the construction of transformers and inductors shall be noncorrosive.

3.3.3 Insulating materials.

3.3.3.1 Laminated phenolic materials. Laminated phenolic material, when used, shall be selected to enable the part to meet the performance requirements of this specification. Additional information and guidance on laminated materials is provided in 6.14.

3.3.3.2 Molded phenolic or melamine materials. Molded phenolic or melamine material, when used, shall be selected to enable the part to meet the requirements of this specification. Additional information and guidance on molded phenolic and melamine materials is provided in 6.15.

Source: https://assist.dla.mil -- Downloaded: 2016-11-03T19:01Z
Check the source to verify that this is the current version before use.

3.3.3.3 Ceramic materials (external use). Ceramic material, when used, shall be selected to enable the part to meet the requirements of this specification. Additional information and guidance on ceramic materials is provided in 6.16.

3.3.4 Wire.

3.3.4.1 Magnet wire. Magnet wire, when used, shall be selected to enable the part to meet the requirements of this specification. Additional information and guidance on magnet wire is provided in 6.17.

3.3.4.2 Insulated wire. Insulated wire, when used, shall be selected to enable the part to meet the requirements of this specification. Additional information and guidance on insulated wire is provided in 6.18.

3.3.5 Solder and soldering flux. Solder and soldering flux, when used, shall be selected to enable the part to meet the requirements of this specification. Additional information and guidance on solder and soldering flux is provided in 6.19.

3.3.5.1 Surface Mount Device (SMD) soldering. For SMD style product, internal solder connections, minimum reflow temperature shall be higher than the next higher assembly soldering temperature as specified on the individual specification sheets.

3.3.6 Screws, nuts, and washers. All mounting and terminal screws, nuts, and washers shall be of corrosion-resistant material or shall be protected against corrosion.

3.4 Interface and dimensions.

3.4.1 Mounting screws and mounting inserts. Screw threads shall be class 2A or 2B, as applicable (see 3.1), in accordance with FED-STD-H28. External screw threads, class 2 fit, after receiving a finish, shall be capable of accepting a nut of class 2B fit and internal screw threads; class 2 fit, after receiving a finish, shall be capable of accepting a screw of class 2A fit with maximum installation torque in accordance with the following:

Screw size	Torque (pound-inches)
.112-40 UNC - - - -	3
.138-32 UNC - - - -	5
.164-32 UNC - - - -	6
.190-32 UNF - - - -	8
.250-20 UNC - - - -	8
.312-18 UNC - - - -	8

Nuts shall run down to within two threads of mounting surface.

3.4.2 Metals. Metal surfaces shall be corrosion resistant or shall be plated or treated to resist corrosion and shall meet the requirements specified in 3.4.3.

3.4.3 Terminals (see 3.1).

3.4.3.1 Solder terminals (see 4.7.2.2). Solder terminals may be of any shape and shall be capable of complying with solderability requirements of this specification (not to include insulated stranded wire or magnetic wire). The height of the solder terminal shall be considered as the maximum distance from the terminal mounting surface to the highest point, including the additional height obtained if semi-flexible terminals are straightened. (It is not intended that the "hook" in the hook-type terminal be straightened from its normal hooked position.) The type of terminal and the maximum size of wire, which the terminal will accept externally, shall be as specified (see 3.1).

3.4.3.2 Pin-type terminals for printed circuits (see 3.1). Where pin-type terminals are used the dimensions shall be as specified (see 3.1).

3.4.3.3 Screw terminals. When specified (see 3.1, external screw terminals shall be supplied with two nuts, two flat washers, and one lockwasher. For cased units, the height of the terminal assembly shall be the distance from the free end of the screw to the terminal mounting surface. The type of terminal, size of screw thread, and the exposed length of threads shall be as specified (e.g., screw, .164-32 UNC x .375) (see 3.1).

3.4.4 Mounting studs. When specified (see 3.1), external mounting studs shall be provided with a flat washer and locknut, or with a flat washer, lockwasher, and a nut.

Source: https://assist.dla.mil -- Downloaded: 2016-11-03T19:01Z
Check the source to verify that this is the current version before use.

3.4.5 Internal wire leads. Internal wire leads shall be attached to the coils and other internal components and terminals or case by soldering, welding, brazing, or other method (e.g., lead-sweating of nylon-coated wires) in such a manner as to provide adequate electrical connection and mechanical strength. Where soft solder is used to provide the electrical connection, wire leads shall be anchored mechanically. In addition, for class T product, wire leads shall be attached in order to meet the radiographic inspection requirements of Appendix B.

3.4.6 Core and coil mounting. Cores and coils shall be secured rigidly to prevent any permanent change in the relative position of the parts. When the total volume of the case or inner case of multiple-cased units (such as shielded units) exceeds 6.5 cubic inches, the means of securing the core and coil to the devices for mounting the transformer or inductor in the equipment (e.g., studs, lugs, inserts, brackets, etc.,) shall not depend on soft solder alone for mechanical strength, nor shall the transmission of the mechanical load of the core to the mounting device depend only on soft solder. When rigid thermosetting material is used, or when the total volume of the case or the inner case of multiple-cased units (such as shielded units) does not exceed 6.5 cubic inches, the potting or filling compound alone may be used to prevent movement provided the compound does not tend to flow at the specified maximum operating temperature (see 3.1). When specified (see 3.1), the core shall be grounded to the case or shall be electrically accessible.

3.4.7 Paint color. When a paint finish is specified (see 3.1), the color of the paint shall be in accordance with FED-STD-595, gray, 26307 Unless otherwise specified (see 3.1), the manufacturer shall omit paint from the mounting area surface and terminal surface.

3.4.8 Potting, filling, or encapsulating material (grades 4 and 5). The amount and coverage of potting, filling, or encapsulating material used shall be essentially the same for all units of a specific design. Potting, filling, or encapsulating material shall not flow from the case of the transformer or inductor during any of the applicable tests.

3.4.9 Weight. Transformers and inductors shall not exceed the weight specified (see 3.1).

3.5 Solderability. When the transformers and inductors are tested as specified in 4.7.2, they shall meet the applicable criteria for terminal evaluation in the test method.

3.6 Resistance to solvents. When the transformers and inductors are tested as specified in 4.7.3, there shall be no evidence of mechanical damage and the markings shall remain legible. The paint or exterior finish shall not soften, peel, or show other signs of deterioration.

3.7 Thermal shock screening and thermal shock test.

3.7.1 Thermal shock screening (Product level T only). This test is applicable only when specified (see 3.1) and shall be performed in the qualification tests in group II and the group A inspection in subgroup I. When transformers and inductors are tested as specified in 4.7.4.1 there shall be no evidence of filling material and no evidence of other physical damage such as cracks, bursting or bulging of the case or corrosion affecting the mechanical or electrical operation. When continuity monitoring is specified there shall be no evidence of electrical discontinuity greater than 100 microseconds.

3.7.2 Thermal shock test. When transformers and inductors are tested as specified in 4.7.4.2 there shall be no evidence of filling material damage or leakage and no evidence of other physical damage such as cracks, bursting or bulging of the case or corrosion affecting the mechanical or electrical operation.

3.8 Resistance to soldering heat. When the transformers and inductors are tested as specified in 4.7.6, there shall be no softening of the insulation or loosening of the windings or terminals.

3.9 Terminal strength. When the transformers and inductors are tested as specified in 4.7.7, there shall be no evidence of loosening or rupturing of the terminals, or other mechanical damage. Bends shall not be considered as damage unless surface cracking is evident. Except for flexible leads, there shall be no rotation of the terminals. Rotation of the external portion of the metallic portion of a "hook" type terminal exceeding 10 degrees shall not constitute a failure.

3.9.1 Bond strength. Bond strength for leadless “chip style” units shall be specified in the individual specification sheets (see 3.1).

3.10 Seal (grade 4) (see 4.7.8).

3.10.1 Liquid-filled units. When the transformers and inductors are tested as specified in 4.7.8.1, there shall be no evidence of liquid leakage.

3.10.2 Gas-filled units. When the transformers and inductors are tested as specified in 4.7.8.2, the leak rate shall not exceed 1×10^{-8} standard atmosphere cubic centimeter per second (atm cm^3/s).

Source: https://assist.dla.mil -- Downloaded: 2016-11-03T19:01Z
Check the source to verify that this is the current version before use.

3.10.3 All other units. When the transformers and inductors are tested as specified in 4.7.8.3, there shall be no continuous flow of air bubbles or leakage of compound from the body of the units.

3.11 Dielectric withstanding voltage. When the transformers and inductors are tested as specified in 4.7.9, there shall be no evidence of arcing, flashover, breakdown of insulation, or damage.

3.12 Induced voltage. When the transformers and inductors are tested as specified in 4.7.10, there shall be no evidence of continuous arcing or breakdown of insulation, nor shall there be any abrupt changes in the input current, or Q, as applicable. This test is not applicable for single winding inductors for which no rated voltage is specified.

3.13 Insulation resistance. When measured as specified in 4.7.11, the minimum insulation resistance shall be one of the following values, as specified in tables V, VI, and VII.

a. 10,000 megohms.
b. 1,000 megohms.
c. 7,500 megohms.

3.14 Electrical characteristics. When the transformers and inductors are tested as specified in 4.7.12, the applicable electrical characteristics and tolerances shall be as specified (see 3.1).

3.15 Temperature rise. When the transformers and inductors are tested as specified in 4.7.13, the temperature rise of any winding above the specified maximum ambient temperature (see 3.1) shall not exceed the value specified (see 3.1), and there shall be no evidence of physical damage.

3.16 Corona discharge (when specified, see 3.1). When the transformers and inductors are tested as outlined in 4.7.14 or as specified (see 3.1), the corona shall not exceed 1-inch peak-to-peak deflection as indicated on the oscilloscope.

3.17 Salt atmosphere (corrosion) (grades 4 and 5, when specified, see 3.1). When the transformers and inductors are tested as specified in 4.7.15, there shall be no evidence of corrosion as exhibited by any visible degradation of the surfaces that can be attributed to flaking, pitting, blistering or otherwise loosened protective coating or metal surface.

3.18 Vibration. When the transformers and inductors are tested as specified in 4.7.16, there shall be no leakage of filling material, no evidence of other physical damage such as cracks, bursting, or bulging of the case.

3.19 Shock. When the transformers and inductors are tested as specified in 4.7.17, there shall be no leakage of filling material, no evidence of other physical damage such as cracks, bursting, or bulging of the case.

3.20 Winding continuity. When the transformers and inductors are tested as specified in 4.7.18, all windings shall be electrically continuous.

3.21 Immersion (grades 4 and 5). When the transformers and inductors are tested as specified in 4.7.19, there shall be no leakage of filling material, no evidence of other physical damage such as cracks, bursting, or bulging of the case or corrosion affecting the mechanical or electrical operation.

3.22 Moisture resistance. When the transformers and inductors are tested as specified in 4.7.20, there shall be no leakage of filling material, no evidence of other physical damage such as cracks, bursting, or bulging of the case or corrosion affecting the mechanical or electrical operation.

3.23 Overload. When the transformers and inductors are tested as specified in 4.7.21, there shall be no leakage of filling material, no evidence of other physical damage such as cracks, bursting, or bulging of the case.

3.24 Visual and mechanical examination (post test). When the transformers and inductors are examined as specified in 4.7.1.1.1, not more than 10 percent of the surface shall have peeling, flaking, chipping, cracking, crazing, or other impairment of the protective coating. There shall be no leakage of the filling material, no evidence of other physical damage, such as cracks, bursting, or bulging of the case or corrosion affecting the mechanical or electrical operation of the units.

3.25 Flammability (grade 5). When the transformers and inductors are tested as specified in 4.7.22, there shall be no evidence of violent burning which results in an explosive-type fire, and the coating material used on the transformers and inductors shall be self-extinguishing. A transformer or inductor shall not be considered to have failed, in the event that it is consumed by the applied flame, unless dripping of flaming material or an expolsive-type flame has occurred. A transformer or inductor shall be considered to have failed only if an explosion of dripping of flaming material occurs, an explosive-type flame is produced, or if visible burning continues beyond the allowable duration of 3 minutes after removal of the applied flame. Material will be considered self-extinguishing if the following conditions are met:

Source: https://assist.dla.mil -- Downloaded: 2016-11-03T19:01Z
Check the source to verify that this is the current version before use.

a. The duration of visible flame does not exceed 3 minutes after removal of the applied flame.
b. There is no explosion, nor any violent burning which results in an explosive-type flame.
c. There is no dripping of flaming material from the transformer or inductor under test.

3.26 Life. When the transformers and inductors are tested as specified in 4.7.23, there shall be no evidence of physical or electrical damage as indicated by an open circuit (a break in the continuity of any electrical circuit within the transformer or inductor being tested) or short circuit occurring within the transformer or inductor (such as shorted turns or faulty insulation between layers, turns, windings, windings and case or core, or windings and shield). In addition, transformers and inductors shall meet the following requirements:

a. Insulation resistance shall be as specified in 3.13c.
b. Dielectric withstanding voltage (at atmospheric pressure) shall be as specified in 3.11.
c. Induced voltage shall be as specified in 3.12.

The electrical characteristics shall remain within the tolerance or limits specified (see 3.1).

3.27 Fungus. All external materials shall be non-nutrient to fungus growth or shall be suitably treated to retard fungus growth. The manufacturer shall certify that all external materials are fungus resistant (see 4.7.24) or shall perform the test specified in 4.7.24. There shall be no evidence of fungus growth on the external surfaces.

3.28 Burn-in (Product level T only). When transformers and inductors are tested as specified in 4.7.5 there shall be no leakage of filling material and no evidence of physical damage such as cracks, bursting or bulging of the case or corrosion affecting the mechanical or electrical operation.

3.29 Radiographic Inspection (Product level T only). When transformers/inductors are tested in accordance with 4.7.25, they shall exhibit no evidence of defects listed in Appendix B

3.30 Marking. The transformers and inductors shall be marked with the military part number, manufacturer's part number, name or identifier, or CAGE code, source code terminal identification (circuit diagram where space permits), date code, and lot symbol (if other than date code) in accordance with method I of MIL-STD-1285. The marking may be applied to more than one side of the case if the required marking necessitates more space than is available on the one side. Where the surface areas are insufficient for all of the required information, as many as possible of the markings shall be applied using the order of priority as listed above. Markings shall remain legible after all tests (except for flammability). Any markings of a classified nature shall not be included. The type designation shall not be marked on the unit unless otherwise specified (see 3.1). As specified (see 3.1), use of tags or labels are allowed when part marking surface is insufficient for full marking.

3.30.1 Terminal identification. Unless otherwise specified (see 3.1), terminals shall be identified by appropriate numbers or, where space does not permit numbering, by color coding in accordance with table III.

TABLE III. Terminal color code.

Black (ground) - 0	Green - - - 5
Brown - - - - - - - 1	Blue - - 6
Red - - - - - - - - - 2	Violet - - 7
Orange - - - - - - 3	Gray - - - 8
Yellow - - - - - - 4	White - - - 9

3.31 Recycled, recovered, or environmentally preferable, or biobased materials. Recycled, recovered, or environmentally preferable materials should be used to the maximum extent possible provided that the material meets or exceeds the operational and maintenance requirements, and promotes economically advantageous life cycle costs.

3.32 Pure tin. The use of pure tin, as an underplate or final finish, is prohibited both internally and externally. Tin content of, transformer or coil, components and solder finish shall not exceed 97 percent, by mass. Tin shall be alloyed with a minimum of 3 percent lead, by mass (see 6.21). Use of lead-free, tin alloy high temperature solders for internal connections requires approval by the qualifying activity. The tin content of lead-free high temperature solders shall not exceed 97 percent by mass. In addition, completed devices shall not be re-plated.

3.33 Workmanship. The transformers and inductors shall be processed in such a manner as to be uniform in quality and shall meet the requirements of 3.3, 3.4, and 3.30, as applicable, and shall be free of defects that will affect life or serviceability.

Source: https://assist.dla.mil -- Downloaded: 2016-11-03T19:01Z
Check the source to verify that this is the current version before use.

4. VERIFICATION

4.1 Classification of inspections. The examination and testing of transformers and inductors shall be classified as follows:

a. Qualification inspection (see 4.4).
b. Conformance inspection (see 4.6).

4.2 Test equipment and inspection facilities. Test and measuring equipment and inspection facilities of sufficient accuracy, quality and quantity to permit performance of the required inspection shall be established and maintained by the inspection facility. The establishment and maintenance of a calibration system to control accuracy of the measuring and test equipment shall be in accordance with ANSI/NCSL Z540.3, ISO 10012 or equivalent.

4.3 Inspection conditions. Unless otherwise specified herein, all inspections shall be performed in accordance with the test conditions specified in the "GENERAL REQUIREMENTS" of the applicable DoD standard, i.e., MIL-STD-202. When a test method is not specified, the standard test conditions of MIL-STD-202 shall apply.

4.3.1 Test voltage. For transformers and inductors (other than audio families), the rated rms voltage at the minimum frequency of the specified frequency range shall be applied at the rated duty cycle (e.g., transformers rated at 50/60 hertz (Hz) shall be tested at 50 Hz; transformers and inductors rated at 60 Hz ±10 percent shall be tested at 60 Hz. When rated primary voltages are specified with a tolerance (see 3.1), the test voltage shall be the rated voltage (e.g., 115 ±10 volts shall be tested at 115 volts). For two-terminal primary windings where the rated primary voltage is specified as a range, the test voltage shall be the arithmetic mean of the range. For multitap primary windings where a range of voltages is specified, the test voltage shall be applied to the highest voltage in the range and applied to the appropriate terminals (e.g., 105 to 125 volts shall be tested at 125 volts). For dielectric withstanding voltage tests, the peak of the voltage applied shall not exceed by more than 5 percent the peak of the pure sine voltage.

4.3.2 Test frequency. When a test frequency is specified herein, the frequency used shall be within ±2 percent of the nominal value. The test frequency of audio transformers and inductors shall be the geometric mean of the specified frequency range or a lower value selected by the manufacturer.

4.3.3 Specified mounting. When specified in the test procedure, surface mount devices (SMD) style products are to be mounted on a suitable test substrate, which shall be a minimum of 95 percent alumina. The test substrate material shall not contribute to, or cause any failure in any of the tests for which it may be used. If multiple parts are mounted to the same substrate, a minimum separation of 1.0 inch (2.54 mm) will be used. The method of mounting shall be as follows:

a. All solderable terminations. Transformers/Inductors shall be mounted on the test substrate by soldering the terminations directly to the test substrate metallized land areas in the following manner:

(1) Solder and soldering flux, when used shall be selected to enable the parts to meet the requirements of this specification. Additional information and guidance on solder and flux is provided in paragraph 6.19.

(2) All Transformers/Inductors shall then be placed across the metallized land areas of the test substrate with contact between the terminations and substrate land areas only.

(3) The test substrate with all transformer/inductors in position shall then be placed in or on a suitable heat transfer unit (molten solder, hot plate, tunnel oven, etc.) with the temperature maintained at 260°C +/- 5°C until the solder melts and reflows forming a homogenous solder connection.

4.4 Qualification inspection. Qualification inspection when required and for listing on the QPL shall be performed at a laboratory acceptable to the government (see 6.3) on sample units produced with equipment and procedures normally used in production.

4.4.1 Qualification of transformers and inductors based on complete testing.

4.4.1.1 Sample size. The number of sample units comprising a sample of transformers or inductors to be submitted for inspection shall be as specified in appendix A. Sample units shall have previously passed all the requirements of a 100 percent screen to the appropriate Group A subgroup for the product level and grade for which qualification is requested. Extension of qualification requirements are also specified in appendix A.

4.4.1.2 Inspection routine. The sample units shall be subjected to the inspections specified in table V, in the order shown, and as specified in appendix A to this specification.

Source: https://assist.dla.mil -- Downloaded: 2016-11-03T19:01Z
Check the source to verify that this is the current version before use.

4.4.1.3 Failure. One or more failures shall be cause for refusal to grant qualification approval.

4.4.2 Qualification inspection of transformers and inductors based on similarity. Qualification inspection shall be performed only on those transformers and inductors which meet the requirements of A.4.1 of appendix A. Sample units shall have previously passed all the requirements of the screening tests of table VI for the product level and grade for which qualification is requested. Extensions of qualification requirements are also specified in appendix A.

4.4.2.1 Sample size. The number of sample units comprising a sample of transformers or inductors to be submitted for inspection shall be as specified in appendix A.

4.4.2.2 Inspection routine. Sample units shall be subjected to the qualification inspection in table VI, in the order shown.

4.4.2.3 Failure. One or more failures shall be cause for refusal to grant qualification approval.

4.5 Retention of qualification. When required and for listing on the QPL. To retain qualification, every 60 months, the contractor shall meet the requirements of 4.4.1 and provide verification of the following requirements:

a. Design of the transformer or inductor has not been changed.
b. Conformance tests, and periodic tests have been performed as specified herein.
c. The contractor retains the capability to manufacture and test transformers or inductors to this specification.
d. Continued qualification to the product level C shall be based on continued maintenance of qualification for the product level M.
e. Continued qualification to the product level C and product level M shall be based on continued maintenance of qualification for the product level T.

In the event that no production has occurred in this period, the contractor shall still verify to the qualifying activity that the capability to manufacture and test the QPL transformer or QPL inductor still exists and that the contractor wants to remain on the QPL.

Source: https://assist.dla.mil -- Downloaded: 2016-11-03T19:01Z
Check the source to verify that this is the current version before use.

TABLE V. Qualification inspection.

Inspection	Grade			Requirement paragraph	Method paragraph
	4	5	6		
Group I					
Solderability 2/ - - - - - - - - - - - - - - - - - -	X	X	X	3.5	4.7.2
Resistance to solvents (3 samples) 1/ - -	X	X		3.6	4.7.3
Group II					
Resistance to soldering heat - - - - - - - -	X	X	X	3.8	4.7.6
Thermal shock (T level only) - - - - - - - -	X	X	X	3.7.1	4.7.4.1
Terminal strength 4/ 5/ - - - - - - - - - - - -	X	X	X	3.9	4.7.7
Seal- -	X			3.10	4.7.8
Dielectric withstanding voltage:					
At atmospheric pressure - - - - - - - - - -	X	X	X	3.11	4.7.9.1
At barometric pressure - - - - - - - - - -	X	X	X	3.11	4.7.9.2
Induced voltage - - - - - - - - - - - - - - - - -	X	X	X	3.12	4.7.10
Insulation resistance - - - - - - - - - - - - - - -	X	X	X	3.13a	4.7.11
Electrical characteristics - - - - - - - - - - - -	X	X	X	3.14	4.7.12
Temperature rise (2 units) - - - - - - - - -	X	X	X	3.15	4.7.13
Group III 5/					
Corona discharge (when specified) - - - -	X	X	X	3.16	4.7.14
Salt atmosphere (when specified) - - - - -	X	X		3.17	4.7.15
Vibration -	X	X	X	3.18	4.7.16
Shock -	X	X	X	3.19	4.7.17
Dielectric withstanding voltage:					
At reduced voltage - - - - - - - - - - - -	X	X	X	3.11	4.7.9
Induced voltage - - - - - - - - - - - - - - - -	X	X	X	3.12	4.7.10
Winding continuity - - - - - - - - - - - - - - -	X	X	X	3.20	4.7.18
Thermal shock (10 cycles) 6/ - - - - - - - -	X	X	X	3.7.2	4.7.4.2
Winding continuity 6/ - - - - - - - - - - - -	X	X	X	3.20	4.7.18
Immersion -	X	X		3.21	4.7.19
Moisture resistance - - - - - - - - - - - - - - -	X	X		3.22	4.7.20
Dielectric withstanding voltage:					
At reduced voltage - - - - - - - - - - - -	X			3.11	4.7.9
Induced voltage - - - - - - - - - - - - - - - -	X			3.12	4.7.10
Insulation resistance - - - - - - - - - - - - - -	X			3.13b	4.7.11
Winding continuity - - - - - - - - - - - - - - -	X			3.20	4.7.18
Overload -	X	X	X	3.23	4.7.21
Dielectric withstanding voltage:					
At reduced voltage - - - - - - - - - - - -		X	X	3.11	4.7.9
Induced voltage - - - - - - - - - - - - - - - -		X	X	3.12	4.7.10
Insulation resistance - - - - - - - - - - -		X		3.13a	4.7.11
Insulation resistance - - - - - - - - - - - - -			X	3.13b	4.7.11
Winding continuity - - - - - - - - - - - - - - -		X	X	3.20	4.7.18

See footnotes at end of table.

Source: https://assist.dla.mil -- Downloaded: 2016-11-03T19:01Z
Check the source to verify that this is the current version before use.

TABLE V. Qualification inspection - Continued.

Inspection	Grade			Requirement paragraph	Method paragraph
	4	5	6		
Group III - Continued					
Visual and mechanical examination (external) (post test) - - - - - - - - - - - -	X	X	X	3.24	4.7.1.1.1
Electrical characteristics (final) - - - - - -	X	X	X	3.14	4.7.12
Flammability (2 sample units) - - - - - -		X		3.25	4.7.22
Visual and mechanical examination (internal) (3 sample units) - - - - - - -	X	X	X	3.1, 3.3 to 3.3.3.2 incl., 3.4.5, 3.4.6, 3.4.8, and 3.32	4.7.1.2
Group IV					
Life (2 samples) - - - - - - - - - - - - - - - - -	X	X	X	3.26	4.7.23
Dielectric withstanding voltage:					
At reduced voltage - - - - - - - - - - - -	X	X	X	3.11	4.7.9
Insulation resistance - - - - - - - - - - - -	X	X	X	3.13c	4.7.11
Induced voltage - - - - - - - - - - - - - - -	X	X	X	3.12	4.7.10
Visual and mechanical examination (external) (post test) - - - - - - - - - - - -	X	X	X	3.24	4.7.1.1.1
Electrical characteristics - - - - - - - - -	X	X	X	3.14	4.7.12
Group V					
Fungus 3/ -	X	X	X	3.27	4.7.24

1/ Printed circuit type transformers and inductors only, or when specified (see 3.1).

2/ Solderable type terminals only: If the soldering iron method (4.7.2.2) of the solderability test is performed, then the resistance to soldering heat test (4.7.6.2) need not be performed.

3/ Test shall not be performed if the manufacturer provides certification that all external materials are fungus resistant.

4/ Substitute Bond Strength for SMD type devices.

5/ All subsequent tests for SMD units are to be performed with units mounted on test substrates per 4.3.3.

6/ Tests are not required for T level units provided Thermal shock was performed during group II testing.

Source: https://assist.dla.mil -- Downloaded: 2016-11-03T19:01Z
Check the source to verify that this is the current version before use.

TABLE VI. Qualification inspection for transformers and inductors similar to transformers and inductors that have been qualified.

Inspection	Requirement paragraph	Method paragraph
Visual and mechanical examination (external)- - - - - - - - - - - - - -	3.1, 3.3 to 3.3.3.3 incl., 3.4.1, 3.4.3 to 3.4.3.3 incl., 3.4.5, 3.4.6, 3.4.8, 3.30 and 3.32	4.7.1.1
Dielectric withstanding voltage:		
At atmospheric pressure- - - - - - -	3.11	4.7.9.1
At barometric pressure (when applicable) - - - - - - - - - - - - - -	3.11	4.7.9.2
Induced voltage- - - - - - - - - - - - - -	3.12	4.7.10
Insulation resistance- - - - - - - - - - -	3.13a	4.7.11
Electrical characteristics - - - - - - - -	3.14	4.7.12
Corona discharge (when specified) -	3.16	4.7.14
Temperature rise (1 sample unit) - - -	3.15	4.7.13
Overload - - - - - - - - - - - - - - - - - - -	3.23	4.7.21
Dielectric withstanding voltage:		
At reduced voltage - - - - - - - - - - -	3.11	4.7.9
Induced voltage- - - - - - - - - - - - - -	3.12	4.7.10
Insulation resistance- - - - - - - - - - -	3.13a	4.7.11
Winding continuity - - - - - - - - - - - -	3.20	4.7.18
Visual and mechanical examination (external) - - - - - - - - - - - - - - - - -	3.1, 3.3 to 3.3.3.3 incl., 3.4.1, 3.4.3 to 3.4.3.3 incl., 3.4.5, 3.4.6, 3.4.8, 3.30 and 3.32	4.7.1.1

4.6 Conformance inspection.

4.6.1 Inspection of product for delivery

4.6.1.1 Product level C. Inspection of product for delivery shall consist of group A for product level C. (see 4.6.1.4.1)

4.6.1.2 Product levels M and T. Inspection of product for delivery shall consist of groups A and applicable group B inspections. Product level T transformers and inductors shall not be delivered until they have successfully completed group A and applicable group B inspections. Unless otherwise specified, product level M transformers or inductors may be delivered after sample units have passed group A inspection prior to sample units completing applicable group B inspection (see 4.6.1.5).

4.6.1.3 Inspection and Production lot.

4.6.1.3.1 Inspection lot. An inspection lot shall include completely assembled transformers or inductors of the same grade, class, specification sheet, and electrical characteristics, manufactured under essentially the same conditions and having similar construction and materials, may be combined to form a lot. (Similar construction and materials shall be construed to include differences that will not affect test results.) For product level T transformers or inductors, an inspection lot shall consist of one production lot.

4.6.1.3.2 Production lot. A production lot shall consist of all transformers and inductors covered by a single specification sheet and single PIN. Manufacture of all parts in the lot shall have been started, processed, assembled, and tested as a group. Lot identity shall be maintained throughout the manufacture cycle.

4.6.1.4 Group A inspection.

4.6.1.4.1 Product level C. The contractor shall establish and maintain an inspection system to verify the transformer/inductor meet the electrical requirements, and visual/mechanical requirements. In-line or process control may be part of such a system. The inspection system shall also include criteria for lot rejection and corrective actions. NOTE: Since the product level C transformer/inductor is the product level M design without the mandatory government conformance inspection, this product is still expected to meet the environmental qualification type requirements (e.g., moisture resistance, thermal shock, shock, vibration, etc.).

4.6.1.4.1 Product level M and T. Group A inspection shall consist of the applicable inspections specified in Table VII, in the order shown.

Source: https://assist.dla.mil -- Downloaded: 2016-11-03T19:01Z
Check the source to verify that this is the current version before use.

4.6.1.4.3 Sampling procedure (subgroup 1)(T level only)

4.6.1.4.3.1 Product level T. Shall be subjected to 100 percent inspection as specified in table VII. Rejects shall be removed from the lot. Lots having more than 5 percent or 1 unit rejects, whichever is greater shall not be furnished on the contract or purchase order.

4.6.1.4.4 Sampling procedure (subgroup 2)(M level only)

4.6.1.4.4.1 Product level M. A sample of parts shall be randomly selected from each inspection lot in accordance with table VIII. If one or more defects are found, the lot shall be rescreened and defects removed. After screening and removal of defects, a new sample of parts shall be randomly selected in accordance with table VIII. If one or more defects are found in the second sample, the lot shall be rejected and shall not be supplied to this specification.

4.6.1.4.5 Disposition of sample units. Sample units that have been subjected to subgroup 1 or 2 of the group A inspection may be delivered on the contract after successful completion of group B tests.

Source: https://assist.dla.mil -- Downloaded: 2016-11-03T19:01Z
Check the source to verify that this is the current version before use.

TABLE VII. Group A inspection.

Inspection	Requirement paragraph	Method paragraph
Subgroup I (T level only)		
Thermal shock screening (when specified) (see 3.1) - - - - -	3.7.1	4.7.4.1
Burn-In - - - - - - - - - - - - - - - - - - -	3.28	4.7.5
Seal (when applicable) - - - - - - - - -	3.10	4.7.8
Dielectric withstanding voltage 1/ -	3.11	4.7.9
Induced voltage - - - - - - - - - - - - -	3.12	4.7.10
Insulation resistance - - - - - - - - - -	3.13a	4.7.11
Electrical characteristics 2/ - - - - -	3.14	4.7.12
DC resistance and resistive unbalanced - - - - - - - - - - - - - -	- - -	4.7.12.3
Inductance and inductive unbalanced - - - - - - - - - - - - - -	- - -	4.7.12.4
Center-tap balance at low levels (-20 to -80 dbm balance) - - - -	- - -	4.7.12.13
Turns ratio - - - - - - - - - - - - - - - -	- - -	4.7.12.17
Polarity - - - - - - - - - - - - - - - - - -	- - -	4.7.12.14
No load - - - - - - - - - - - - - - - - - -	- - -	4.7.12.1
Radiographic inspection - - - - - - - - -	3.29	4.7.25
Visual and mechanical (external) - - - - - - - - - - - - - - - -	3.1, 3.3 to 3.3.3.3 incl., 3.4.1, 3.4.3 to 3.4.3.3 incl., 3.4.4, 3.4.8, 3.30 and 3.32	4.7.1.1
Winding continuity - - - - - - - - - - -	3.20	4.7.18
Subgroup II (M level only)		
Visual and mechanical examination (external) - - - - - - - - - - - - - - - -	3.1, 3.3 to 3.3.3.3 incl., 3.4.1, 3.4.3 to 3.4.3.3 incl., 3.4.4, 3.4.8, 3.30 and 3.32	4.7.1.1
Seal (Grade 4) - - - - - - - - - - - - - -	3.10	4.7.8
Dielectric withstanding voltage 1/ - -	3.11	4.7.9
Induced voltage - - - - - - - - - - - - - -	3.12	4.7.10
Insulation resistance - - - - - - - - - -	3.13a	4.7.11
Electrical characteristics 2/ - - - - -	3.14	4.7.12
DC resistance and resistive unbalanced - - - - - - - - - - - - - -	- - -	4.7.12.3
Inductance and inductive unbalanced - - - - - - - - - - - - - -	- - -	4.7.12.4
Center-tap balance at low levels (-20 to -80 dbm balance) - - - -	- - -	4.7.12.13
Turns ratio - - - - - - - - - - - - - - - -	- - -	4.7.12.17
Polarity - - - - - - - - - - - - - - - - - -	- - -	4.7.12.14
No load - - - - - - - - - - - - - - - - - -	- - -	4.7.12.1

1/ The Government may witness this test prior to performance of group A inspection in which event 4.7.8.3 will apply (see 6.6).
2/ As applicable (see 3.1).

Source: https://assist.dla.mil -- Downloaded: 2016-11-03T19:01Z
Check the source to verify that this is the current version before use.

TABLE VIII. Groups A and B, zero defect-sampling plan.

Lot size	Sample size	
	Group A	Group B
	Subgroup 2	Product level M
	Product level M	
1 to 5	100 percent	100 percent
6 to 13	100 percent	5
14 to 50	13	5
51 to 90	13	7
91 to 150	13	11
151 to 280	20	13
281 to 500	29	16
501 to 1,200	34	19
1,201 to 3,200	42	23
3,201 to 10,000	50	29
10,001 to 35,000	60	35
35,001 to 150,000	74	40
150,001 to 500,000	90	40
500,00 and over	102	40

4.6.1.5 Group B inspection (Product level M and T only). Group B inspection shall consist of the tests specified in table IX, in the order shown and shall be made on sample units which have been subjected to and have passed the group A tests unless it is more practical to select a separate sample from the lot for group B inspection.

TABLE IX. Group B inspection.

Test	Requirement paragraph	Method paragraph
Electrical characteristics: 1/ - - - - - -	3.14	4.7.12
Rated load 2/- - - - - - - - - - - - - -	- - -	4.7.12.2
Harmonic distortion- - - - - - - - - - -	- - -	4.7.12.5
Frequency response - - - - - - - - - -	- - -	4.7.12.7
Self-resonant frequency- - - - - - - -	- - -	4.7.12.9
Coupling among units (multi unit transformers and inductors) - - - -	- - -	4.7.12.10
Electrostatic shielding- - - - - - - - -	- - -	4.7.12.11
Magnetic shielding - - - - - - - - - - -	- - -	4.7.12.12
Storage factor - - - - - - - - - - - - - -	- - -	4.7.12.15
Wave shape - - - - - - - - - - - - - - -	- - -	4.7.12.16
Phase shift- - - - - - - - - - - - - - - - -	- - -	4.7.12.18
Insertion loss - - - - - - - - - - - - - - -	- - -	4.7.12.8
Other electrical characteristics (see 3.1) - - - - - - - - - - - - - - - - - -	- - -	- - -

1/ As applicable (see 3.1). The actual circuit may be used for the electrical inspection tests in lieu of the test circuits specified herein.
2/ The rated load test need not be performed if proof of prior compliance is available and other group A and B electrical parameters are within the specified limits.

4.6.1.5.1 Product level M transformers/inductors. A sample of parts shall be randomly selected from inspection lots that have passed group A inspection in accordance with table VIII. If one or more defects are found, the sample has failed. Group B inspection shall be completed within 6 months of shipment. If the manufacturer can demonstrate that the group B inspections have been performed five consecutive times with zero failures, these tests, with the approval of the qualifying activity, can be deleted. The manufacturer, however, shall perform these tests every two years after the deletion as part of the long-term design verification. If the design, material, construction, or processing of the part is changed or, if there are any quality problems or failures, the qualifying activity may require resumption of the original test frequency. Deletion of testing does not relieve the manufacturer from meeting the test requirement in case of dispute.

Source: https://assist.dla.mil -- Downloaded: 2016-11-03T19:01Z
Check the source to verify that this is the current version before use.

4.6.1.5.1.1 Failed samples(s). If a sample fails to pass group B inspection, the cognizant inspection activity and the qualifying activity shall be notified immediately. The manufacturer shall take corrective action on the materials or processes, or both, as warranted, and on all units of product which can be corrected and which were manufactured under essentially the same conditions, with essentially the same materials, process, etc., and which are considered subject to the same failure. Delivery of product level M transformers/inductors prior to completion of group B testing shall be discontinued until corrective action, acceptable to the government, has been taken. As an alternative, if the inspection lots have not been shipped, the inspection lots shall be subjected to 100 percent inspection and defectives removed.

4.6.1.5.2 Product level T transformers/inductors. A sample of parts shall be randomly selected from the inspection lot that have passed group A inspection in accordance with table VIII. If one or more defects are found, the sample has failed.

4.6.1.5.2.1 Failed samples(s). If a sample fails to pass group B inspection, the cognizant inspection activity and the qualifying activity shall be notified immediately. The manufacturer shall take corrective action on the materials or processes, or both, as warranted, and on all units of product which can be corrected and which were manufactured under essentially the same conditions, with essentially the same materials, process, etc., and which are considered subject to the same failure. As an alternative, if the inspection lots have not been shipped, the inspection lots shall be subjected to 100 percent inspection and defectives removed.

4.6.1.5.3 Disposition of sample units. Sample units, which have passed group B inspection, may be delivered on contracts or purchase order if the lot is accepted.

4.7 Methods of inspection.

4.7.1 Visual and mechanical examination.

4.7.1.1 External. Transformers and inductors shall be examined to verify that the materials, external design and construction, physical dimensions, weight, marking, and workmanship are in accordance with the applicable requirements (see 3.1, 3.3 to 3.3.3.3 inclusive, 3.4.1, 3.4.3 to 3.4.3.3 inclusive, 3.4.5, 3.4.6, 3.4.8, 3.27 and 3.30).

4.7.1.1.1 Post test. Transformers and inductors shall be examined to verify that the protective coating, filling material, marking, and case construction are in accordance with the applicable requirements (see 3.24).

4.7.1.2 Internal. Transformers and inductors shall be disassemble and/or dissected and examined to verify that the materials, internal lead wires, internal mounting, impregnating, potting, and workmanship are in accordance with the applicable requirements (see 3.1, 3.3 to 3.3.3.2 inclusive, 3.4.5, 3.4.6, 3.4.8, and 3.32.

4.7.2 Solderability (see 3.5). Transformers and inductors shall be tested in accordance with 4.7.2.1 or 4.7.2.2, as applicable.

4.7.2.1 Solder bath method (for Surface Mount Devices and printed circuit terminals). Transformers and inductors shall be tested in accordance with method 208 of MIL-STD-202. The following details shall apply:

a. Special preparation of specimen - Sample units shall not have been soldered during any of the previous tests.
b. Number of terminations of each part to be tested - A minimum of two of each type of terminal.

4.7.2.2 Soldering iron method (for all other terminal types). The test shall be performed on all solder terminals attached to the transformer or inductor. The solder shall conform to J-STD-004, composition Sn60Pb40A or Sn63Pb37A. The flux shall conform to J-STD-006, form W and flux symbol A, flux percentage symbol 6 or 7. The iron and solder shall be applied to the termination. Tinning for free flowing of the solder with proper wetting shall be evident. The transformer or inductor under test shall remain under standard atmospheric conditions for recovery for fifteen minutes, before final measurements are made.

a. Special preparation of specimen - The surface shall be smooth and properly tinned and the solder terminations shall not have been soldered during any previous test.
b. Number of terminations - In accordance with 4.7.2.1.
c. Examinations of terminations - In accordance with method 208 of MIL-STD-202.
d. Point of application of soldering iron - 1/4 inch from the nearest insulating material or to one-half the exposed length of the terminal, whichever point is closer to the insulating material.

Source: https://assist.dla.mil -- Downloaded: 2016-11-03T19:01Z
Check the source to verify that this is the current version before use.

4.7.3 Resistance to solvents (see 3.6). Transformers and inductors shall be tested in accordance with method 215 of MIL-STD-202. The following details shall apply:

a. The marked portion of the transformer and inductor shall be brushed.
b. The number of sample units shall be as specified in table V.
c. Transformers and inductors shall be examined for mechanical damage (see 3.24).
d. A soft bristle brush may be substituted when testing conformal coated (i.e. varnish or epoxy dipped) parts using materials with a soft (i.e. Shore Hardness less than 70) finish.

4.7.4 Thermal shock screening and thermal shock test (see 3.7).

4.7.4.1 Thermal shock screening (level T only). This test is applicable only when specified (see 3.1) and shall be performed in the qualification tests in group II and the group A inspection in subgroup I. Transformers and inductors shall be tested in accordance with method 107 of MIL-STD-202 except the temperature for step 3 shall be the maximum operating temperature for the class. The following details and exceptions shall apply:

a. Number of cycles: The number of cycles shall be as specified (see 3.1) but shall be restricted to 5, 10, 15, 20, 25 or 50 cycles and 25 cycles minimum for product level T parts.
b. When specified (see 3.1), transformers and inductors shall be continually monitored continuity during the entire final cycle to verify no intermittent conditions. Continuity monitoring current shall not exceed 100 microamperes. Equipment shall be capable of detecting intermittent opens exceeding 100 microseconds.
c. Class T parts using magnet wire smaller than AWG 38 shall have dc resistance measured before and after the thermal shock screen. The change in resistance shall not exceed ±3 percent.

4.7.4.2 Thermal shock test. Transformers and inductors shall be tested in accordance with method 107 of MIL-STD-202. The temperature for step 3 shall be the maximum operating temperature for the class. The following details and exceptions shall apply:

a. Test condition - A, except 10 cycles.
b. After cycling - transformers and inductors shall be examined for evidence of leakage and other visable damage (see 3.24).

4.7.5 Burn-in. (Applicable to product level T parts only)

4.7.5.1 Power burn-in (applicable for transformers with an output greater than 0.8 watts). Devices shall be tested as follows:

a. Test duration: 96 hours minimum.
b. Test temperature: Maximum rated ambient temperature. (See applicable specification)
c. Test voltages and currents: Rated input voltage and current at minimum rated frequency and at maximum rated load.

4.7.5.1.1 No load burn-in (applicable for transformers with an output equal to or less than 0.8 watts). Devices shall be tested as follows:

a. Test duration: 96 hours minimum.
b. Test temperature: Maximum rated ambient temperature. (See applicable specification)
c. Test voltages and currents: Rated input voltage and current at minimum rated frequency with no load.

4.7.5.1.2 No load burn-in for inductors. Devices shall be tested as follows:

a. Test duration: 96 hours minimum.
b. Test temperature: Maximum operating temperature. (See applicable specification)
c. Test voltages and currents: Not applicable.

4.7.6 Resistance to soldering heat (see 3.8). Transformers and inductors shall be tested in accordance with 4.7.6.1 or 4.7.6.2, as applicable.

Source: https://assist.dla.mil -- Downloaded: 2016-11-03T19:01Z
Check the source to verify that this is the current version before use.

4.7.6.1 Solder bath method (for Surface Mount Devices and printed circuit terminals). Transformers and inductors shall be tested in accordance with method 210 of MIL-STD-202. The following details shall apply:

a. Special preparation of specimen - Sample units shall not have been soldered during any of the previous tests.
b. Depth of immersion in the molten solder - To a point 1/4 inch from the nearest insulating material or to one-half the exposed length of the terminal, whichever point is closer to the insulating material.
c. Test condition – B (260°C ±5°C; immersion, 10 ±1 seconds).
d. Examination after test - The transformers and inductors shall be visually examined and there shall be no seepage of the impregnant, loosening of the terminals or other mechanical damage. The windings of transformers or inductors shall be checked for continuity. The transformer or inductor shall remain under standard atmospheric conditions for 15 minutes before final measurements are made.

4.7.6.2 Soldering iron method (for all other terminal types). The test shall be performed on all solder terminals attached to the transformer or inductor. The solder shall conform to J-STD-004, composition Sn60Pb40A or Sn63Pb37A. The flux shall conform to J-STD-006, form W and flux symbol A, flux percentage symbol 6 or 7. The iron and solder shall be applied to the termination. Tinning for free flowing of the solder with proper wetting shall be evident. The transformer or inductor under test shall remain under standard atmospheric conditions for recovery for fifteen minutes, before final measurements are made.

a. Special preparation of specimen - The surface shall be smooth and properly tinned and the solder terminations shall not have been soldered during any previous test.
b. Examinations after test - In accordance with 4.7.6.1.
c. Test condition – A (350°C ±10°C).
d. Point of application of soldering iron - 1/4 inch from the nearest insulating material or to one-half the exposed length of the terminal whichever point is closer to the insulating material.

4.7.7 Terminal strength (see 3.9). Transformers and inductors shall be tested as specified in 4.7.7.1 to 4.7.7.3.2 inclusive, as applicable. After each test, the terminals shall be examined for loosening and rupturing, and other mechanical damage. Unless otherwise specified, all terminals on each test sample shall be subjected to the following tests, up to a maximum of four identical terminals per sample.

4.7.7.1 Pull.

4.7.7.1.1 Solid-wire and insulated wire lead terminals (other than printed circuit terminals). Transformers and inductors shall be tested in accordance with method 211 of MIL-STD-202. The following details shall apply:

a. Test condition - A.
b. Points of measurement - A force shall be applied in the direction of the axis of termination and shall be increased gradually until the magnitude specified in table X is reached and shall be maintained for a period of 5 to 10 seconds.

4.7.7.1.2 Solder terminals. Transformers and inductors shall be tested in accordance with method 211 of MIL-STD-202. The following details shall apply:

a. Test condition - A.
b. Points of measurement - A force as specified in table X shall be applied to each terminal at the point where the lead from the external circuit connects to it. The force shall be applied in the weakest direction of the terminal, and shall be increased gradually to the specified magnitude and shall be maintained at that value for a period of 5 to 10 seconds.

TABLE X. Pull.

Cross-sectional area of electrode at its smallest point at which lead from external circuit connects	Force
Circular mils	Pounds
≤2,000	2.0
>2,000	5.0

Source: https://assist.dla.mil -- Downloaded: 2016-11-03T19:01Z
Check the source to verify that this is the current version before use.

4.7.7.1.3 Printed circuit and pin-type terminals (see 3.4.3.2). Transformers and inductors shall be tested for terminal secureness in accordance with method 211 of MIL-STD-202. The following detail and exception shall apply:

a. Test condition - A.
b. Applied force - Terminal secureness shall be tested by gradually applying a force of 2.0 pounds to each pin terminal in the direction of the axis of the terminal as shown on figure 1.

4.7.7.2 Twist or bend.

4.7.7.2.1 Solid-wire lead terminals (other than printed circuit terminals). Following the test specified in 4.7.7.1.1, transformers and inductors shall be tested in accordance with method 211 of MIL-STD-202. The following detail and exception shall apply:

a. Test condition - D.
b. Application of torsion - The body of the component part or the clamped terminal shall be rotated through 360 degrees about the original axis of the bent terminal, in alternating directions, for a total of five rotations, at the rate of approximately 3 seconds per rotation.

4.7.7.2.2 Flat solder terminals. Any terminal that shows permanent deformation greater than 15 degrees of the metal portion of the terminal in the terminal-pull test specified in 4.7.7.1.2 shall be tested in accordance with method 211 of MIL-STD-202. This test does not apply to terminals that show permanent deformation but are not designed to be bent 45 degrees. The following detail and exception shall apply:

a. Test condition - B.
b. Number of bending operations - Five times through an angle of 90 degrees (45 degrees each side of center).

4.7.7.3 Torque.

4.7.7.3.1 Screw-thread terminals. Transformers and inductors shall be tested in accordance with method 211 of MIL-STD-202, test condition E.

4.7.7.3.2 All other terminals. All other terminals shall be subjected to the torque specified in method 211 of MIL-STD-202, test condition E. The torque for a terminal with a nominal diameter greater than 1/2 inch will be 160 ounce-inches. The torque shall be applied to the terminal at the point where the external lead wires normally connect to it. The motion shall be applied clockwise and counterclockwise in a plane perpendicular to the axis of the terminal. The equivalent diameter is equal to two times the distance from terminal center to point of wire connection after maximum permanent deflection due to the pull test as indicated by the examples shown on figure 2. The equivalent diameter for "hook" type terminals is the diameter of the wire from which the terminal is formed.

4.7.8 Seal (grade 4) (see 3.10). Transformers and inductors shall be tested in accordance with 4.7.8.1, 4.7.8.2, or 4.7.8.3, as applicable. Any transformer or inductor which shows evidence of leakage may be given remedial treatment. After completion of the treatment, the seal test shall be repeated as evidence that such remedial treatment is adequate. All other units in the lot which have been given similar satisfactory remedial treatment shall be acceptable.

4.7.8.1 Liquid-filled units. Transformers and inductors shall be heated in an oven maintained at a temperature equal to or not more than 5°C greater than the sum of the specified maximum ambient temperature and the allowable temperature rise (see 3.1), for not less than 3 hours for transformers or inductors weighing 20 pounds or less, and for not less than 6 hours for transformers and inductors weighing over 20 pounds.

4.7.8.2 Gas-filled units. Transformers and inductors shall be tested in accordance with method 112 of MIL-STD-202. The following details shall apply:

a. Test condition letter - C.
b. Leakage-rate sensitivity - 10^{-8} atm cm^3/s.
c. Procedure IV, as specified (see 3.1), test for gross leaks as specified in 4.7.8.3.

4.7.8.3 All other units. Transformers and inductors shall be immersed for 2 to 3 minutes in a bath of water (or other suitable liquid of no greater density or surface tension) maintained at a temperature of 85°C +5°C, -0°C. The temperature of the transformer or inductor shall not exceed 40°C at the time of immersion. (Or when specified, see 3.1, the following alternate test may be used; the transformers or inductors shall be immersed in a container of water containing approximately 1 percent wetting agent such as Aerosol which shall then be placed in a vacuum chamber. The pressure shall be reduced to 3.4 inches of mercury and maintained at this pressure for a period of at least 3 minutes.)

Source: https://assist.dla.mil -- Downloaded: 2016-11-03T19:01Z
Check the source to verify that this is the current version before use.

4.7.9 Dielectric withstanding voltage (see 3.11 and 6.4). Transformers and inductors shall be tested in accordance with 4.7.9.1, and 4.7.9.2 when applicable.

4.7.9.1 At atmospheric pressure. Transformers and inductors shall be tested in accordance with method 301 of MIL-STD-202. The following details and exceptions shall apply:

a. Magnitude of test voltage - As specified in table XI for transformer and inductor windings not grounded internally. However, where there is a high-voltage center-tap winding and another adjacent winding operated at a dc potential, the peak voltage that may be present between the windings should be considered in computing the test voltages. Test voltages greater than 1,000 volts rms shall be applied gradually at a rate not exceeding 500 volts rms per second.
b. Nature of potential - AC.
c. Duration of application of specified test voltage - Minimum of 5 seconds for quality conformance inspection, 1 minute for qualification inspection.
d. Points of application of test voltage:

(1) Winding to case or core - Between each winding and the case or core with all windings not under test grounded to the case (if cased) or to the normal mounting means (if uncased) and to the core (if accessible).
(2) Between windings - The voltage shall be applied between each winding and each of the other windings with all windings not under test grounded to the case (if cased) or to the normal mounting means (if uncased) and to the core (if accessible). These tests need not be made if the winding-to-case or -core test voltage of either winding under consideration is equal to, or greater than, the winding-to-winding test voltage. The method used to perform the between-windings dielectric-withstanding voltage test shall consist of two sources of test voltage, so proportionated and phased, that the winding-to-winding test voltages shall be according to table XI. One terminal of each source shall be grounded to the case (if cased), or to the normal mounting means (if uncased), and to the core (if accessible). The test voltages applied shall not exceed the test voltages required for each of the windings to ground, and shall be applied so that the required test voltage appears between the windings. Multiple-section windings designed for operation only in series or parallel shall be considered as a single winding. In no case shall the test voltage applied between the windings exceed the sum of the test voltages for each of these windings to the case (if cased) or to the normal mounting means (if uncased), and to the core (if accessible). An acceptable alternate test method is to connect one voltage source terminal to a winding and the other terminal to the remaining winding(s).

e. High voltage source shall have a minimum of 1 kilovolt-ampere capacity for voltages over a kilovolt.

f. Examination during and after test - Transformers and inductors shall be examined for evidence of arcing, flashover, breakdown of insulation, and damage.

TABLE XI. Dielectric withstanding voltage at atmospheric pressure.

Working voltage 1/	RMS test voltage (at 28 to 32 inches of mercury)
≤ 50	100
> 50 to 100 incl.	300
> 100 to 175 incl.	500
> 175 to 700 incl.	2.8 x working voltage
> 700	1.4 x working voltage, +1,000

1/ The working voltage is defined as the maximum instantaneous (peak) voltage stress that may appear under normal rated operation across the insulation being considered. This insulation may be between windings or between a winding and the case or core.

4.7.9.1.1 For special designs. Transformer and inductor windings internally grounded or having any part of the winding designed for operation at or near ground potential shall be subjected to the induced-voltage test or a combination of the dc dielectric withstanding voltage on the low-voltage terminal together with induced voltage, as applicable (see 4.7.10). Windings with special dielectric features (e.g., graded insulation) shall be subjected to the test voltage specified (see 3.1), or to the induced-voltage test (see 4.7.10). Dielectric withstanding voltage tests for pulse transformers shall be as specified (see 3.1).

Source: https://assist.dla.mil -- Downloaded: 2016-11-03T19:01Z
Check the source to verify that this is the current version before use.

4.7.9.2 At barometric pressure. Transformers and inductors designed for operation above 10,000 feet shall be tested as specified in 4.7.9.1 and in accordance with method 105 of MIL-STD-202. The following details and exceptions shall apply:

a. Test condition or altitude in feet if below 30,000 feet - As specified (see 3.1).
b. Magnitude of test voltage - As specified in table XII. A greater potential may be used at the option of the supplier.
c. Examination during and after test - Transformers and inductors shall be examined for evidence of arcing, flashover, breakdown of insulation, and damage.

TABLE XII. Dielectric withstanding voltage at reduced barometric pressure.

Working voltage 1/	Test voltage
Volts	Volts, rms
≤ 50 - - - - - - - - - - - - - - - - - -	100
> 50 - - - - - - - - - - - - - - - - - -	300 or 1.25 x working voltage: whichever is greater

1/ The working voltage is defined as the maximum instantaneous (peak) voltage stress that may appear under normal rated operation across the insulation being considered. This insulation may be between windings or between a winding and the case or core.

4.7.9.2.1 For special designs. When the induced-voltage test is used (see 4.7.9.1.1), it shall be performed at an atmospheric pressure equivalent to the altitude for which the transformer or inductor is rated, and the test voltage shall be sufficient to cause 125 percent of rated voltage to appear across the winding (see 3.1 and 4.7.10).

4.7.9.3 At reduced voltage. Transformers and inductors shall be subjected to the dielectric-withstanding voltage tests specified in 4.7.9.1, except that the test voltages shall be 75 percent (65 percent for life test) of the values shown in table XII and shall be applied for a period of 5 seconds.

4.7.10 Induced voltage (see 3.12) (this test is applicable when any winding has a rated voltage in excess of 25 volts rms). Transformers and inductors shall be subjected to the tests specified in 4.7.10.1 through 4.7.10.3, as applicable. During this test, the transformers and inductors shall be examined for evidence of continuous arcing, breakdown of insulation, and abrupt changes in the input current. Means shall be provided to indicate fluctuations of input current or changes in Q, as applicable.

4.7.10.1 All transformers and inductors except pulse, sonar and saturating core power (see 3.1). Transformers and inductors shall be subjected to a voltage sufficient to cause twice the rated voltage to appear across any winding. The test voltage shall be applied to any winding. Windings should be grounded as they would be in service. The test frequency shall be as selected by the manufacturer and shall be remote from any resonant frequency. The test potential shall be applied for 7,200 ±200 cycles, or 5 ±1/2 seconds, whichever is greater for qualification testing. For quality conformance inspection, the test potential shall be applied for 5 ±1/2 seconds.

4.7.10.2 Pulse and sonar transformers and inductors. A test pulse voltage shall be applied for 1 minute to any winding at the specified rated repetition rate (see 3.1) sufficient to induce a voltage across any winding between 25 and 50 percent of the rated pulse width, in accordance with table XIV, and shall be performed in air. For grade 4 transformers and inductors, this test shall be repeated for units rated at greater than 10,000 volts at twice rated voltage with the transformer or inductor terminals under oil. At the option of the manufacturer, the test in air for grade 4 transformers and inductors may be made at twice the rated voltage, in which case the second test under oil will not be required. During the test, the transformer and inductor shall be loaded as specified and fitted with specified protective devices (see 3.1). The operation of any specified protective device shall not be a cause for failure. In the case of a magnetron load, a resistance equivalent to the static resistance of the magnetron can be used.

TABLE XIV. Induced voltage for pulse and sonar transformers and inductors.

Max. voltage rating on highest voltage winding	Induced voltage
≤ 10,000 -	Twice rated voltage
> 10,000 to 20,000 incl. - - - - - - - - - - - - - - - - - -	1.666 x rated voltage
> 20,000 to 35,000 incl. - - - - - - - - - - - - - - - - - -	1.333 x rated voltage

Source: https://assist.dla.mil -- Downloaded: 2016-11-03T19:01Z
Check the source to verify that this is the current version before use.

4.7.10.3 Saturating core power transformers. Saturating core power transformers should be tested at the limit of their linear characteristics, using sine wave power sources at twice normal operating frequency. The test voltage shall be applied to any winding sufficient to cause twice the normal peak-to-peak voltage appear across any winding.

4.7.11 Insulation resistance (see 3.13). Transformers and inductors shall be tested in accordance with method 302 of MIL-STD-202. The following details and exceptions shall apply:

a. Test condition B for qualification inspection; and dc test potentials from 500 volts to 1,000 volts for quality conformance inspection. However, for quality conformance inspection, rejection shall be based on measurements made at 500 volts. For both qualification inspection and quality conformance inspection, the test voltage will be 100 volts if the working voltage is less than 175 volts and 50 volts if the working voltage is less than 25 volts.
b. Points of measurement:

(1) Winding to case or core - The potential shall be applied between each winding and the case or core with all windings not under test grounded to the case (if cased) or to the normal mounting means (if uncased) and to the core (if accessible).

(2) Between windings (for grade 5 units when mounting brackets or core are not accessible) - The potential shall be applied between each winding and all other windings connected together.

The measurements shall be made at any temperature above 20°C and at ambient room humidity, but rejections shall be based on measurements made at 25°C +10°C, -5°C and at a relative humidity not greater than 80 percent.

4.7.12 Electrical characteristics (see 3.14). The electrical characteristics shall be determined by the tests specified herein, as applicable (see 3.1). Electrical tests included herein do not embrace all of the electrical tests that may be requested.

4.7.12.1 No load. Rated voltage at the frequency or frequencies specified (see 3.1) shall be applied to the primary with the secondary or secondaries open circuited. The following shall be determined:

a. No-load rms current (I_{n1}).
b. No-load power (P_{n1}).
c. Primary-tap and secondary rms voltages.
d. Center-tap voltage unbalanced in percent = $[(V_1 - V_2)/V_1] \times 100$
The voltage unbalance shall be computed: V_1 and V_2 are the voltages of each part of the winding, and $V_1 \geq V_2$.

4.7.12.1.1 For vibrator or invertor transformers. The transformers shall be connected to ac sources at the specified frequency and voltage (see 3.1). The following shall be determined:

a. No-load true rms current (I_{n1}).
b. Primary tap and secondary true rms voltages.
c. Voltage unbalance (when applicable) using the method specified in 4.7.12.1d.

4.7.12.2 Rated load.

4.7.12.2.1 Unrectified outputs. Unrectified output secondary voltages shall be measured with the transformer primary excited at rated voltage at the specified frequency (see 3.1), and with rated rms load currents flowing in the secondary windings.

4.7.12.2.2 Rectified outputs. Rms voltages at the secondary terminals shall be measured with the transformer primary excited at rated voltage at the specified frequency, and with rated dc current flowing from a specified rectifier and filter in a resistive load (see 3.1).

4.7.12.2.3 For vibrator or inverter transformers. The vibrator or inverter transformer shall be tested in the circuit or simulated circuitry for which it is designed. The transformer primary shall be excited from the specified source. The secondaries shall be loaded as specified. The following shall be determined:

a. DC input voltage and current.
b. Secondary true rms voltage and current, or dc voltage and current as applicable.
c. Operating frequency and waveform characteristics (when specified).

Source: https://assist.dla.mil -- Downloaded: 2016-11-03T19:01Z
Check the source to verify that this is the current version before use.

4.7.12.3 DC resistance and resistive unbalance. The dc resistance of the windings shall be measured at, or corrected to 20°C. The resistive unbalance of center-tapped windings in percent $[[(R_1 - R_2)/R_1] \times 100]$ shall be computed. R_1 and R_2 are the resistances of each part of the winding, and $R_1 \geq R_2$. For resistances under 1 ohm, measurements shall be made with a Kelvin bridge or equivalent.

4.7.12.4 Inductance and inductive unbalance. The inductance of the windings shall be measured at the specified test voltage and frequency with the specified dc current applied (see 3.1). The inductive unbalance of center-tapped windings in percent $[[(L_1 - L_2)/L_1] \times 100]$ shall be computed. L_1 and L_2 are inductances of each part of the winding, and $L_1 \geq L_2$.

4.7.12.5 Harmonic distortion. The transformer shall be terminated in its proper source and load impedance. A sine-wave voltage of specified frequency shall be applied such that the specified output conditions are achieved and the total harmonic distortion shall then be computed or measured (see 3.1).

4.7.12.6 Primary impedance (for qualification only). Transformer primary impedance shall be measured with all normally loaded secondaries loaded with their specified impedances, and with specified dc currents flowing in the windings. The resistance and reactance looking into the primary shall be measured at the specified input frequency and voltage by a bridge or equivalent method approved by the Government (see 3.1).

4.7.12.7 Frequency response. Using the circuit shown on figure 3, with the specified values of impedance, sufficient EMF from the source of the specified reference frequency should be applied to present the specified voltage across the load impedance. Keeping the source EMF constant, the output voltage is then measured at the specified frequencies (see 3.1). The rated dc currents shall flow through the windings. The measuring device shall be a vacuum-tube voltmeter or equivalent instrument having high-impedance input circuit. The same type of instrument shall be used to measure the source EMF and the output voltage. Frequency response, in decibels (dB), may be determined for each instrument as follows:

$$dB = 20 \log \frac{E_f}{E_r}$$

Where:

E_r = reference output voltage.
E_f = output voltage at any other frequency.

A frequency spectrum instrument may be used as an alternate method of test.

4.7.12.8 Insertion loss. Transformers shall be tested in accordance with 4.7.12.8.1 or 4.7.12.8.2, as specified (see 3.1).

4.7.12.8.1 Insertion loss, for equal input and output impedance. Using the circuit shown on figure 4 with a constant voltage, Eg, across the generator, the load voltage, with and without the transformer in the circuit, shall be measured at the specified frequency (see 3.1). The insertion loss in dB, shall be calculated using the following formula:

$$I.L. = 20 \log_{10} \frac{E_1}{E_2}$$

Where:

I.L. = Insertion loss (in dB) with ($E_g = E_1$) constant
E_1 = Voltage with the transformer not in the circuit at the specified frequency
E_2 = Load voltage with the transformer in the circuit at the specified frequency

Source: https://assist.dla.mil -- Downloaded: 2016-11-03T19:01Z
Check the source to verify that this is the current version before use.

4.7.12.8.2 Insertion loss for unequal input and output impedance. The insertion loss shall be determined as above using the test circuit on figure 4. The insertion loss shall be calculated using the following formula:

$$I.L = 20 \log_{10} \frac{E_g}{2E_L} + 10 \log_{10} \frac{Z_L}{Z_S}$$

Where:

I.L. = Insertion loss (in dB)
E_g = Constant voltage across the generator
E_L = Load voltage with transformer in circuit
Z_S = Source impedance (to match the reflected input design impedance)
Z_L = Load impedance.

4.7.12.9 Self-resonant frequency. Unless otherwise specified (see 3.1) the self-resonant frequency shall be determined as follows, using the test circuit shown on figure 5. Starting at the lowest frequency within the specified frequency range, the frequency shall be increased and the VTVM or equivalent observed for voltage dip (e.g. impedance bridges). The frequency at which the minimum dip occurs shall be recorded as the self-resonant frequency. An alternate test method is to use an impedance analyzer, an oscilloscope (or similar equipment) to determine the self-resonant frequency.

4.7.12.10 Coupling among units (multi-unit transformers and inductors). With any one of the units energized, as specified, at the geometric-mean frequency of the specified frequency range, the voltage induced in the highest voltage or impedance winding of any other unit shall be measured (see 3.1).

4.7.12.11 Electrostatic shielding. With all windings short-circuited and those on the same side of the electrostatic shield connected together, using the circuit shown on figure 6 the voltage of the signal generator at the specified frequency (see 3.1) shall be set to give a definite indication on the detector, with switch "S" open. With switch "S" closed, the generator voltage shall be increased so as to yield the same indication on the detector, and the ratio of the generator voltages shall be computed. The detector shall have a minimum input impedance of 1 megohm.

4.7.12.12 Magnetic shielding. The transformer or inductor shall be placed in the approximate center of a Helmholtz structure (see 6.5), consisting of two test coils placed coaxially 1 foot apart and connected in series aiding. Each coil shall consist of 1,500 turns of 0.00795-inch diameter (AWG size 32) wire, wound on a coil form having a radius of 1 foot and a length of 1 inch. A 115-volt, 60 Hz alternating voltage shall be applied across the series-connected coils, the transformer or inductor shall be rotated until the voltage across the highest voltage or highest impedance winding is a maximum, and this value shall be noted. The detector shall have a minimum impedance of 1 megohm.

4.7.12.12.1 Alternate test. The specimen under test shall be energized and the external field shall be measured by a suitable probe.

4.7.12.13 Center-tap balance at low levels (-20 to -80 dB m balance). Using the circuit shown on figure 7, adjust R_1 until V goes through minimum. Calculate the dB balance from:

$$dB = 20 \log \frac{R_2}{R_1 - R_2}$$

An alternate method may be used for center-tap balance by substituting a ratio transformer for R_1 and R_2 on figure 7. L_1 and L_2 will then replace R_1 and R_2 in the formula for calculating the dB balance.

4.7.12.14 Polarity. With the transformer windings connected in series as specified (see 3.1), and with a voltage applied to one of the windings, comparison shall be made between the sum of the voltages across individual windings and the voltage across the series of windings. Any other suitable method of determining polarity is permissible.

4.7.12.15 Storage factor. Storage factor (Q) shall be measured under the conditions specified (see 3.1).

4.7.12.16 Wave shape. With the source and load conditions as specified (see 3.1), the wave shape of the output shall be determined.

4.7.12.17 Turns ratio or voltage ratio (as specified). The voltmeter method or any other suitable means shall determine the ratio.

Source: https://assist.dla.mil -- Downloaded: 2016-11-03T19:01Z
Check the source to verify that this is the current version before use.

4.7.12.18 Phase shift. The phase shift in electrical degrees attributable to a transformer shall be measured by a phase shift meter or other suitable methods.

4.7.12.19 Short-circuit test (for qualification only). With the secondary windings shorted in turn, the voltage applied to the primary shall be adjusted until the secondary is carrying rated current. The primary power in watts shall then be measured.

4.7.12.20 Capacitance (when specified (see 3.1). Transformers and inductors shall be tested in accordance with method 305 of MIL-STD-202 for distributive or winding to winding capacitance as specified (see 3.1).

a. Test frequency - As specified (see 3.1).
b. Magnitude of polarizing voltage - As specified (see 3.1).

4.7.13 Temperature rise (see 3.15). Unless otherwise specified (see 3.1), the temperature-rise test shall be performed on transformers rated at more than 0.8-watt average output, and on inductors for which the product of the dc resistance and the square of the rated current is more than 0.2 watt. The temperature rise of each winding shall be based on the change-in-resistance method and shall be computed by the following formula:

$$\Delta T = \frac{R - r}{r} (t + 234.5) - (T-t)$$

Where:

ΔT = Temperature rise (in °C) above specified maximum ambient temperature (see 3.1).
R = Resistance of winding (in ohms) at temperature (T + ΔT).
r = Resistance of winding (in ohms) at temperature (t).
t = Specified initial ambient temperature (in °C).
T = Maximum ambient temperature (in °C) at time of power shutoff. (T) shall not differ from (t) by more than 5°C.

The transformers shall be conditioned for at least 8 hours at temperature (t) in a location free from drafts before resistance (r) is measured. For transformers, rated voltage shall be applied to the primary with the specified loads across the secondaries (see 3.1). For inductors, rated dc and ac current shall be applied to the windings. Transformers or inductors shall be operated until two consecutive resistance readings on the highest resistance winding, taken 30 minutes apart, are the same. If the power is required to be shut off, the resistance measurements (R) shall be made as soon as possible. The transformers and inductors shall then be examined for evidence of physical damage. At the option of the supplier, the test may be performed at 60 Hz for transformers rated at 50/60 Hz provided that the primary voltage is increased to 1.2 times the rated voltage and the secondary currents are maintained at rated current. Unless otherwise specified (see 3.1) method I shall be used.

4.7.13.1 Method I.

4.7.13.1.1 For small units (units that will clear each wall of the cabinet by a minimum of 8 inches when supported 3 inches above the base). The transformers or inductors shall be supported in the test cabinet by means of low-thermal-conductivity cleats 3 inches in height. The samples shall be shielded from forced convection air-currents and from direct thermal radiation. The cabinet dimensions, insulation, air circulation, and all other factors influencing the thermal capacity shall be such that the ambient temperature does not increase more than 5 degrees during the determination.

4.7.13.1.2 For large units. Transformers or inductors with dimensions in excess of 8 x 8 x 13 inches shall be supported by means of low-thermal-conductivity cleats 3 inches in height, and shall be tested under standard test conditions (see 4.3) in still air.

4.7.13.2 Method II. Transformers and inductors shall be tested as specified in 4.7.13.1, except that the unit shall be mounted on brass spacers (according to the mounting-screw size) as specified in table XV. The brass spacers shall be connected to a steel plate .125 inch thick and large enough to cover the bottom of the test enclosure within 2.00 inches on each side. For tests on large units, this plate shall be 2-feet square. When the mounting surface area is greater than 1 square foot, a 4-foot square plate shall be used. The brass spacers shall be tapped and shall be in intimate contact by threaded connections with the steel plate and that part of the case, which normally rests on the mounting surface.

Source: https://assist.dla.mil -- Downloaded: 2016-11-03T19:01Z
Check the source to verify that this is the current version before use.

TABLE XV. Brass spacers for temperature-rise test.

Mounting screw size	Brass spacer (diameter and length)
	Inches
.138	.38 x 3.00
.164	.56 x 3.00
.190	.69 x 3.00
.250	.81 x 3.00
.375	1.62 x 3.00
.500	1.75 x 3.00

4.7.13.3 Method III. Two transformers or inductors shall be mounted as specified in 4.7.13.2 and shall be placed side by side in a duct, with the longer sides parallel to the direction of air flow supplied by a blower rated at 50 cubic feet per minute. The blower shall be placed approximately 3 feet from the sample units. The distance between the two sample units and the distance between the sample units and the sides of the duct shall be 15 ±2 percent of the shorter side. Noncombustible baffles shall be used to adjust the duct to proper size. The air temperature within the duct shall be the specified maximum ambient temperature (see 3.1, 6.7, and 6.8).

4.7.14 Corona discharge (see 3.16). When specified (see 3.1), transformers and inductors shall be tested in accordance with 4.7.14.1 or 4.7.14.2, as applicable. The oscilloscope used for this test shall have the sensitivity set at approximately 0.1 volt peak-to-peak per inch and shall have a reasonably uniform response up to 200 kilohertz. An oil-filled unit may be tested at any angle of inclination unless an angle is specified (see 3.1).

4.7.14.1 Intrawinding insulation. When specified (see 3.1), transformers and inductors shall be tested using circuit 1 of figure 8. The corona peak test voltage shall be applied under pressures equivalent to pressures ranging from sea level to the altitude specified (see 3.1) and shall be 130 percent of the applicable peak terminal voltage.

4.7.14.2 Interwinding insulation. When specified (see 3.1), transformers and inductors shall be tested using circuit 2 or 3 of figure 8, as applicable. The test voltages shall be applied under pressures equivalent to pressures ranging from sea level to the altitude specified (see 3.1), in the same manner as specified for the dielectric withstanding voltage test (see 4.7.9). The peak of the corona test voltages shall be 130 percent of the working voltages.

4.7.15 Salt atmosphere (corrosion) (see 3.17). When specified (see 3.1). Transformers or inductors shall be tested in accordance with method 101 of MIL-STD-202.

a. Test condition - B.
b. Salt solution concentration - 5 percent.
c. Examination after exposure - Transformers and inductors shall be thoroughly washed. The temperature shall not exceed 38°C. The transformer or inductor shall be placed in an oven maintained at 50°C ±3°C for a period of 24 ±4 hours. At the end of this period, the transformers and inductors shall be removed from the oven and examined for corrosion.

4.7.16 Vibration (see 3.18). Transformers and inductors shall be tested in accordance with 4.7.16.1 or 4.7.16.2, as applicable.

4.7.16.1 Vibration, low frequency. Transformers and inductors shall be tested in accordance with method 201 of MIL-STD-202. The following details and exceptions shall apply:

a. Tests and measurements prior to vibration - Not applicable.
b. Method of mounting - Transformers and inductors shall be rigidly mounted by their normal mounting means.
c. Procedure - When specified (see 3.1), transformers and inductors shall be placed in a test chamber and preheated to the specified maximum ambient temperature for the class (see 3.1) plus one-half the allowable temperature rise. Vibration in each plane shall begin 5 minutes after removal from the test chamber.
d. Apparatus:

(1) For transformers and inductors weighing 10 pounds or less - May be tested on a horizontally- or vertically vibrating machine. Units, which are normally supported by their wire-lead terminals, shall be mounted and soldered to rigidly supported terminals, so placed that the length of each wire-lead terminal shall be approximately .625 inch. Units, which are mounted to printed circuit boards, may be supported during vibration by cementing the units to a vibration fixture or restraining the bodies of the units in casting wax, or other suitable means.

Source: https://assist.dla.mil -- Downloaded: 2016-11-03T19:01Z
Check the source to verify that this is the current version before use.

(2) For transformers and inductors weighing more than 10 pounds - The sequence of vibration shall be as follows: First vertically, and then horizontally in two mutually perpendicular directions. Two machines may be used (one vibrating horizontally and one vibrating vertically), or a single machine may be used which provides for both vertical and horizontal table motion, or a vertical vibrating machine, at the option of the supplier.

e. Examinations after vibration - Transformers and inductors shall be examined for evidence of leakage and physical damage.

4.7.16.2 Vibration, high frequency (when specified). Transformers and inductors shall be tested in accordance with method 204 of MIL-STD-202. The following details and exception shall apply:

a. Mounting of specimens - As specified in 4.7.16.1d.
b. Test-condition - D, unless otherwise specified.
c. Examinations after vibration - As specified in 4.7.16.1e.

4.7.17 Shock (see 3.19). Transformers and inductors shall be tested in accordance with 4.7.17.1, or when specified (see 3.1), in accordance with 4.7.17.2. The mounting of specimens shall be as specified in 4.7.16.1.

4.7.17.1 Specified pulse. Transformers and inductors shall be tested in accordance with method 213 of MIL-STD-202. The following details and exceptions shall apply:

a. Test conditon - I, unless otherwise specified.
b. Examinations after shock - Transformers and inductors shall be examined for evidence of leakage and physical damage.

4.7.17.2 High-impact. Transformers and inductors shall be tested in accordance with method 207 of MIL-STD-202. The following detail and exception shall apply:

a. Mounting fixtures - Figure "Standard mounting fixtures for electrical controller parts" of method 207.
b. Examinations after shock - As specified in 4.7.17.1b.

4.7.18 Winding continuity (see 3.20). All windings of transformers and inductors shall be tested for electrical continuity by any suitable means.

4.7.19 Immersion (grades 4 and 5) (see 3.21). Transformers and inductors shall be tested in accordance with method 104 of MIL-STD-202. The following detail and exception shall apply:

a. Test condition - B (for qualification inspection for grade 4); A (for qualification inspection for grade 5).
b. After final cycle - Transformers and inductors shall be washed under running tap water and dried. After the drying period, transformers and inductors shall be examined for evidence of leakage and other visible damage.

4.7.20 Moisture resistance (see 3.22). Transformers and inductors shall be tested in accordance with method 106 of MIL-STD-202. The following details and exceptions shall apply:

a. Mounting - On racks.
b. Initial measurements - Not applicable.
c. Conditioning - The 24-hour initial drying period prior to the first cycle may be omitted.
d. Polarization - Unless otherwise specified (see 3.1), polarization is applicable. The polarizing voltage shall be applied during steps 1 to 6 inclusive, between all windings not connected directly to the core or case, and the core or case. When the dielectric withstanding test voltage is less than 100 volts rms, a 50-volt dc polarizing voltage may be used. The polarizing voltage shall be positive with respect to the core and the case.
e. Loading voltage - Not applicable.
f. Final examinations:

(1) Grade 4 - Upon completion of step 6 of the final cycle, transformers or inductors shall be removed from the humidity chamber and shall be conditioned for a maximum of 8 hours at standard inspection conditions (see 4.3). After this conditioning period, dielectric withstanding voltage (at reduced voltage), induced voltage, and insulation resistance shall be measured at any temperature above 20°C and at ambient room humidity, but rejections shall be based on measurements made at 25°C +10°C, -5°C and at a relative humidity not greater than 80 percent.

Source: https://assist.dla.mil -- Downloaded: 2016-11-03T19:01Z
Check the source to verify that this is the current version before use.

(2) Grades 5 and 6 - Upon completion of step 6 of the final cycle, transformers or inductors shall be removed from the humidity chamber, insulation resistance shall be measured at any temperature above 20°C and at ambient room humidity, but rejections shall be based on measurements at 25°C +10°C, -5°C and at a relative humidity not greater than 80 percent.

g. Visual examination - Transformers and inductors shall be examined for any visible damage including corrosion and obliteration of marking.

4.7.21 Overload (see 3.23). The overload test shall be performed for a period of 48 –0, +2 hours for qualification inspection. When transformers and inductors attain an operating temperature of less than the maximum specified for the class during the temperature-rise test specified in 4.7.13, the ambient temperature for the overload test shall be increased above that specified to a value that results in an operating temperature equivalent to the maximum specified for the class (see 6.7). The overload shall be applied as specified in 4.7.21.1 and 4.7.21.2, as applicable. At the option of the manufacturer, the test may be performed at 60 Hz for transformers and inductors rated at 50/60 Hz and at 400 Hz for transformers and inductors rated at 360/400 Hz provided that the primary voltage is increased to 1.2 times the rated voltage for 50 Hz units and 1.1 times the rated voltage for 360 Hz units and the secondary currents are maintained at rated current before applying the overload as specified in 4.7.21.1 and 4.7.21.2. At the conclusion of the test, all transformers or inductors shall be examined for leakage or other visible damage. Transformers or inductors shall be allowed to cool for approximately 8 hours at standard test conditions (see 4.3) before any additional tests are performed.

4.7.21.1 Transformers.

4.7.21.1.1 Output of less than 0.8 watt. Transformers rated at less than 0.8-watt output (except grade 4) shall be tested with 112 percent of rated ac and dc voltages applied, with no load, and at an ambient temperature equivalent to the maximum operating temperature for the class. The test shall not be performed on grade 4 transformers of this electrical rating.

4.7.21.1.2 Output of 0.8 watt or greater. For transformers rated at 0.8-watt output or greater, the rated voltage at the minimum frequency of the specified frequency range shall be applied at the rated duty cycle to the primary winding and with rated load connected to the secondary to set the load impedances. The input voltage shall then be raised to 112 percent of the rated voltage. When applicable, rated dc current shall also be applied during the test.

4.7.21.2 Inductors.

4.7.21.2.1 Rated power less than 0.2 watt. Inductors for which the product of the dc resistance and the square of the rated current is less than 0.2 watt (except grade 4) shall be tested with rated ac and dc voltages applied at an ambient temperature equivalent to the maximum operating temperature for the class. The test shall not be performed on grade 4 inductors of this electrical rating.

4.7.21.2.2 Rated power 0.2 watt or greater. Inductors for which the product of the dc resistance and the square of the rated current is equal to, or greater than 0.2 watt at the minimum frequency at the specified frequency range shall have 112 percent of all rated dc currents and ac voltages applied at the rated duty cycle.

4.7.21.3 Saturable core devices. Saturable core devices shall be tested as required by 4.7.21.2.1 or 4.7.21.2.2, as applicable, except that the load requried shall be adjusted to 112 percent of rated current output.

4.7.22 Flammability (grade 5) (see 3.25). Transformers and inductors shall be tested in accordance with method 111 of MIL-STD-202. The following details and exceptions shall apply:

a. Point of impingement of applied flame - One of the lower free corners, so that the flame is just in contact with the transformer or inductor. The free corners of the transformer or inductor are those corners which are the greatest distance from the mounting brackets. However, the flame shall be applied so that it will impinge upon the corner or area containing the encapsulating compound.
b. Allowable time for burning of visible flame on specimen - 3 minutes maximum.
c. Examinations during and after test - Transformers and inductors shall be examined for evidence of violent burning which results in an explosive-type fire, dripping of flaming material, and visible burning which continues beyond the allowable duration after removal of the applied flame.

Source: https://assist.dla.mil -- Downloaded: 2016-11-03T19:01Z
Check the source to verify that this is the current version before use.

4.7.23 Life (see 3.26). Unless otherwise specified (see 3.1), transformers with a rated output dissipation less than 0.8 watt shall be excited but not loaded. Transformers and inductors shall be subjected to 5 life cycles a week for a minimum of 12 weeks (2,016 hours). Four of the cycles shall consist of 20 hours during which time the transformers and inductors shall be operated at maximum operating temperature for the class, with loading equal to or greater than rated ac and dc voltages and currents, and 4 hours at room ambient temperature without excitation. The fifth cycle of the week shall be 68 hours at maximum operating temperature for the class with samples loaded as before and 4 hours without excitation at room ambient temperature. The electrical test circuit shall be devised so that an open circuit (see 3.26) or short circuit (see 3.26) during the 5 life cycles shall be detected and the time of failure recorded. For transformers only, the test may be performed with samples loaded back-to-back provided the above mentioned loading requirements are met. This test may be performed at any ambient temperature provided that the maximum operating temperature for the class is held within +10°C, -5°C and no drafts or varying air velocities are present. At the option of the supplier, the test may be performed at 60 Hz for transformers rated at 50/60 Hz and at 400 Hz for transformers rated at 360/400 Hz provided the primary voltage is increased to at least 1.1 times the rated voltage and the maximum operating temperature for the class is attained. Upon completion of cycling after a minimum of 12 weeks, transformers and inductors shall be tested for insulation resistance (see 4.7.11), dielectric withstanding voltage (at atmospheric pressure) (see 4.7.9.3) using 65 percent of initial test voltage, and induced voltage (see 4.7.10), using a voltage sufficient to cause 1.3 times the rated voltage to appear across any winding. Samples shall also be examined for evidence of physical and electrical damage.

Note: If a holiday should occur in any week while life tests are in progress, the four hour off cycle can be deleted for that day. A maximum of two off cycles shall be allowed in any one week, when approved by the procuring activity.

4.7.24 Fungus (see 3.27). Unless certification is provided, transformers and inductors shall be tested in accordance with method 508 of MIL-STD-810 (see 3.1).

4.7.25 Radiographic Inspection (Product level T only) (see 3.29). Transformers and inductors shall be tested in accordance with Appendix B with three views of 90 degrees apart by X-ray, or 360 degree view by Vidicon. Use of “real time” X-ray system capable of viewing through 360 degrees of rotation is encouraged.

5. PACKAGING

5.1 Packaging requirements. For acquisition purposes, the packaging requirements shall be as specified in the contract or purchase order. When actual packaging of material is to be performed by DoD personnel these personnel need to contact the responsible packaging activity to ascertain requisite packaging requirements. Packaging requirements are maintained by the Inventory Control Point’s packaging activity within the Military Department or Defense Agency, or within the Military Department’s System Command. Packaging data retrieval is available from the managing Military Department’s or Defense Agency’s automated packaging files, CD-ROM products, or by contacting the responsible packaging activity.

6. NOTES

(This section contains information of a general or explanatory nature that may be helpful, but is not mandatory.)

6.1 Intended use. The transformers/inductors covered by this specification are military unique due to the fact that these devices must be able to operate satisfactorily in military systems under the following demanding conditions: -55°C to +170°C operating temperature range, 20 Gs of vibration, 100Gs of shock, 48 hours of salt atmosphere, and 2,016 hours of endurance at the maximum temperature. In addition these military requirements are verified under a qualification system. Commercial components are not designed to withstand these military environmental conditions.

6.2 Acquisition requirements. Acquisition documents must specify the following:

a. Title, number, date of the specification, applicable specification sheet, and the complete PIN (see 1.2.1).
b. Packaging requirements (see 5.1).

Source: https://assist.dla.mil -- Downloaded: 2016-11-03T19:01Z
Check the source to verify that this is the current version before use.

6.3 Qualification. With respect to products requiring qualification, awards will be made only for products which are, at the time set for opening of bids of award of contract, qualified for inclusion in the applicable qualified products list whether or not such products have Qualified Products List QPL No. 27 whether or not such products have actually been listed by that date. The attention of the contractors is called to these requirements, and manufacturers are urged to arrange to have the products that they propose to offer to the Federal Government tested for qualification in order that they may be eligible to be awarded contracts or orders for the products covered by this specification. Information pertaining to qualification of products may be obtained from the DLA Land and Maritime, ATTN: DLA Land and Maritime-VQP, PO Box 3990, Columbus, OH 43218-3990, or by e-mail to vqp.chief@dla.mil. An online listing of products qualified to this specification may be found in the Qualified Products Database (QPD) at https://assist.dla.mil.

6.4 Dielectric withstanding voltage. Users of transformers and inductors should note that the units have been previously tested at 100-percent dielectric withstanding voltages at least one or more times and, therefore, should be tested only at 75 percent test voltage during subsequent inspections such as during incoming inspection by a purchaser. For units with a working voltage in excess of 10 kV, corona measurements should be considered instead of dielectric withstanding voltage.

6.5 Magnetic shielding. The approximate magnetic field strength for the Helmholtz structure described in 4.7.12.12 and illustrated on figure 9, is 43.6 oersteds per peak ampere.

6.6 Notes for airborne application.

6.6.1 Temperature rise (method III). Figure 10 is an example of two units placed in a duct for method III of the temperature rise test. "A" indicates the longer side, and "B" indicates the shorter side (see 4.7.13.3).

6.7 Ambient temperature increase. Ambient temperature increase for use under 4.7.21 will be derived on an assumed linear extrapolation. For example, a class R unit operated under 4.7.13 at an ambient temperature of 70°C with a 20°C temperature rise would be operated under 4.7.21 at an ambient temperature of 85°C (105°C - 20°C = 85°C).

6.8 Test circuits for electrical characteristics. The actual circuit may be used for group B electrical inspection testing in lieu of the test circuits specified herein (see 4.7.12).

6.9 Reduction of dielectric withstanding voltage testing. When the dielectric withstanding voltage potential required between windings is greater than that required between windings and ground, and where there is sufficient insulation used in the construction of the transformer or inductor, a reduction of testing may be accomplished by specifying a sufficiently high winding-to-ground potential so that it includes the required test potential between windings.

6.10 Notes regarding general applications for equipment designers. The equipment designer, by proper application of the information contained in the following paragraphs, can communicate to the transformer or inductor designer of the supplier a more complete understanding of his requirements and thus realize better equipment reliability. This will also prevent the costly overspecification of requirements not needed for the intended use.

6.10.1 Specification sheet transformers and inductors. For any transformer or inductor requirement, the specification sheets listed in supplement 1 should first be reviewed and if usable for the requirement, should be specified.

6.10.2 Temperature. The class designation in table II refers solely to maximum operating temperature and has no relation to types of insulation material. Any insulation material may be used in any class of transformer or inductor, depending entirely upon the maximum operating temperature and its associated life expectancy. The maximum operating temperature refers to the maximum ambient temperature specified for equipment operation, plus the internal temperature rise at the time that thermal stability is reached; however, since the temperature rise of audio transformers is negligible, the maximum operating temperature, in most cases, is the same as the maximum ambient temperature. It should be noted that where the total of the specified maximum ambient temperature and the specified allowable temperature rise exceeds, by any amount, the maximum operating temperature for any given class, the unit must be described by the letter designating the next higher class designation and meet the requirements thereof.

6.10.2.1 Maximum operating temperature. The maximum operating temperature is the same as the allowable temperature rise plus the maximum ambient temperature for the class. Accordingly, temperature rise is the allowable temperature differential between the ambient and maximum operating temperature for a given insulation for a specified life. For example, class R has a maximum operating temperature designation of 105°C; this is normally at 65°C ambient plus a 40°C rise. If the temperature rise was determined to be 30°C, this same transformer could operate in an ambient as high as 75°C (75°C +30°C = 105°C).

Source: https://assist.dla.mil -- Downloaded: 2016-11-03T19:01Z
Check the source to verify that this is the current version before use.

6.10.2.2 Temperature rise. Temperature rise is normally measured and rated at sea level. At higher altitudes, the temperature rise will increase and should be compensated for in the equipment design.

6.10.2.3 Ambient temperature. It is not recommended that a higher operating ambient temperature be specified than that to which the transformer or inductor will actually be exposed. To do so may result in a larger and heavier unit than is needed. In the absence of a specified ambient temperature in the individual document, the following ambient temperatures may be used for the temperature rise test; class Q (65°C), class R (65°C), and class S (85°C).

6.11 Overload. Transformers and inductors designed in accordance with this specification are capable of withstanding an overload of 12 percent for 48 hours.

6.12 Environmental characteristics. Care should be exercised in specifying environmental test requirements to insure that the unit should be tested in a manner compatible with the environment actually present. Thus, for example, if the end equipment is to be shock mounted, sealed, or will include cooling facilities, the transformer or inductor may encounter a less stringent environment. However, it should be noted that the effect on a transformer or inductor of the conditions to which an equipment is subjected, because of position or method of mounting, may be entirely different from the effect on the end equipment as a whole.

6.13 Dielectric withstanding voltage (at atmospheric pressure) (points of application of test voltage, winding to case or core). Grade 5 units (when applicable) must be wrapped lightly with metal foil on as many surfaces as practicable in lieu of a metal case. For some SMD units, points of application are between the terminals and the surface opposite the terminals.

6.14 Laminated phenolic materials (see 3.3.3.1). It is recommended that MIL-I-24768/17, L-P-513, MIL-I-24768/1, or MIL-I-24768/9 be considered for laminated phenolic materials.

6.15 Molded phenolic or melamine materials (see 3.3.3.2). It is recommended that ASTM D 5948-96 to be considered for molded phenolic or melamine materials.

6.16 Ceramic (see 3.3.3.3). It is recommended that MIL-I-10 to be considered for ceramic materials.

6.17 Magnet wire (see 3.3.4.1). It is recommended that MW-1000 to be considered for magnet wire.

6.18 Insulated wire (see 3.3.4.2). It is recommended that MIL-W-76 or MIL-W-16878 to be considered for use when the insulated wire is being used as wire terminals.

6.19 Solder and soldering flux (see 3.3.5). It is recommended that solder and soldering flux to be in accordance with J-STD-004 and J-STD-006.

6.20 International standardization agreement. Certain provisions of this specification are the subject of international standardization agreement (NEPR No. 20). When amendment, revision, or cancellation of this specification is proposed which will affect or violate the international agreement concerned, the preparing activity will take appropriate reconciliation action through international standardization channels including departmental standardization offices, if required.

6.21 Tin whisker growth. The use of alloys with tin content greater than 97 percent, by mass, may exhibit tin whisker growth problems after manufacture. Tin whiskers may occur anytime from a day to years after manufacture and can develop under typical operating conditions, on products that use such materials. Conformal coatings applied over top of a whisker-prone surface will not prevent the formation of tin whiskers. Alloys of 3 percent lead, by mass, have shown to inhibit the growth of tin whiskers. For additional information on this matter, refer to ASTM-B-545 (Standard Specification for Electrodeposited Coatings of Tin).

6.22 Environmentally preferable material. Environmentally preferable materials should be used to the maximum extent possible to meet the requirements of this specification. As of the dating of this document, the U.S. Environmentally Protection Agency (EPA) is focusing efforts on reducing 31 priority chemicals. The list of chemicals is available on their website at http://epa.gov/epaoswer/hazwaste/minimize/chemlist.htm. Further information is available at the following EPA site: http://epa.gov/epaoswer/hazwaste/minimize/. Included in the EPA list of 31 priority chemicals are cadmium, lead, and mercury. Use of the materials on the list should be minimized or eliminated unless needed to meet the requirements specified herein (see Section 3).

Source: https://assist.dla.mil -- Downloaded: 2016-11-03T19:01Z
Check the source to verify that this is the current version before use.

6.23 Subject term (key word) listing.

Marking
Corona
Solderability
Workmanship

6.24 Changes from previous issue. Marginal notations are not used in this revision to identify changes with respect to the previous issue due to the extent of the changes.

Source: https://assist.dla.mil -- Downloaded: 2016-11-03T19:01Z
Check the source to verify that this is the current version before use.

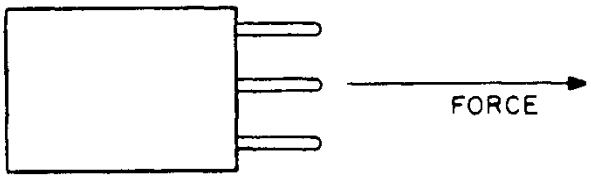

FIGURE 1. Direction of force to be applied to each pin on the unit.

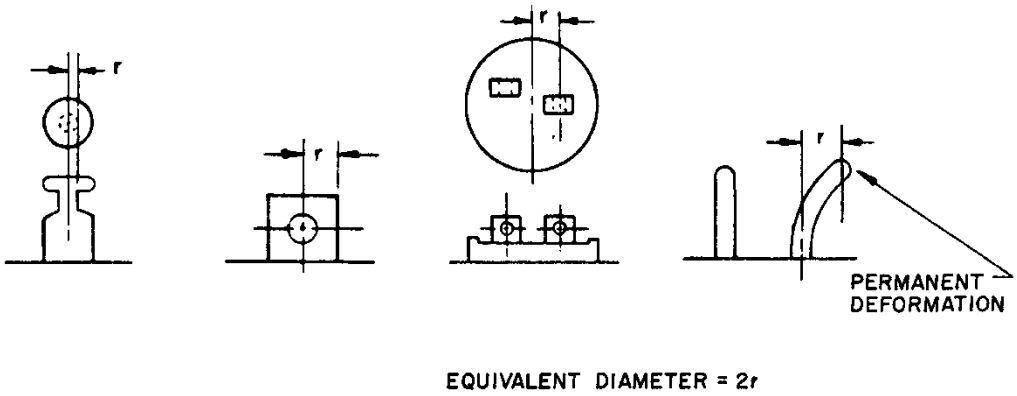

FIGURE 2. Examples of determination of equivalent diameters.

Source: https://assist.dla.mil -- Downloaded: 2016-11-03T19:01Z
Check the source to verify that this is the current version before use.

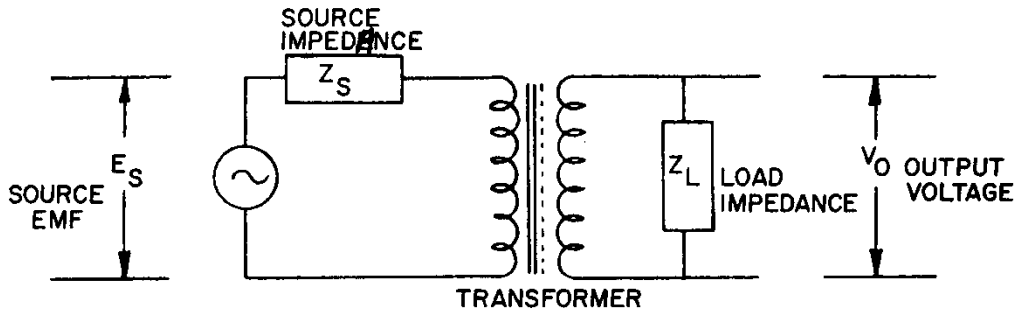

FIGURE 3. Frequency response circuit.

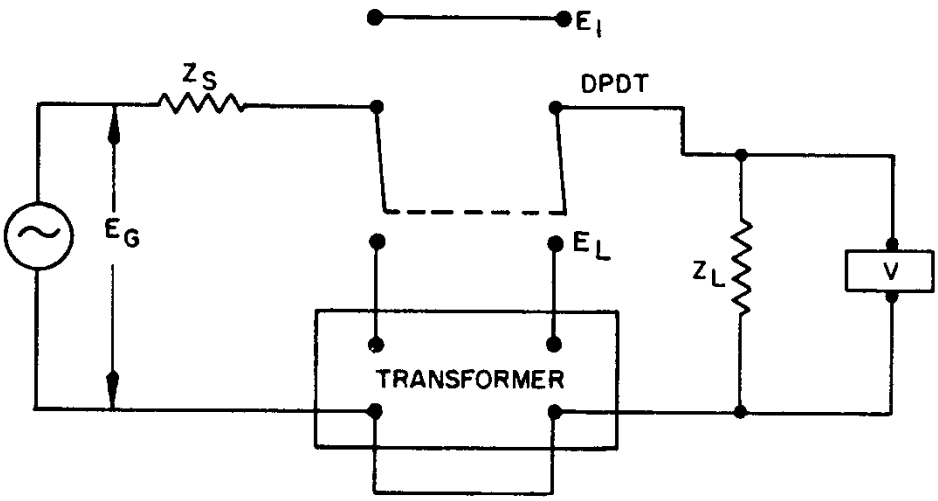

FIGURE 4. Typical measurement circuit for insertion loss.

Source: https://assist.dla.mil -- Downloaded: 2016-11-03T19:01Z
Check the source to verify that this is the current version before use.

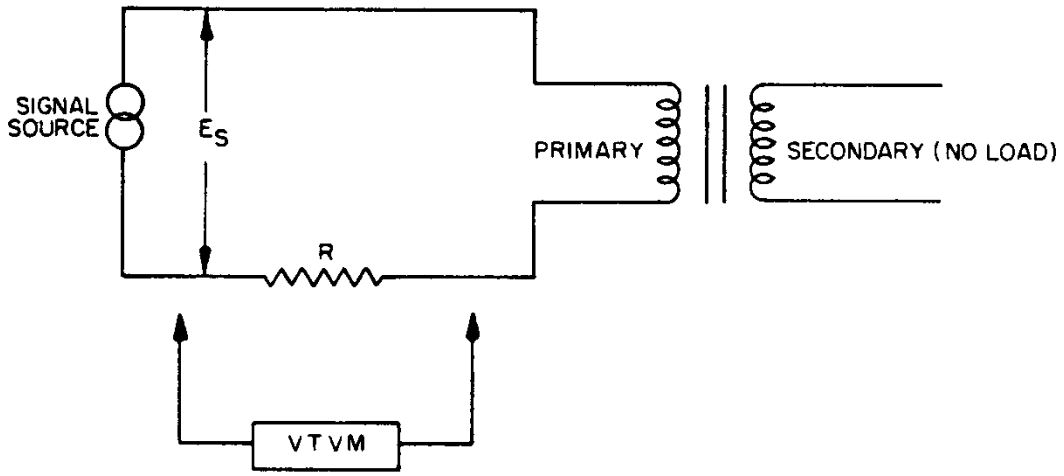

FIGURE 5. Measurement of SRF.

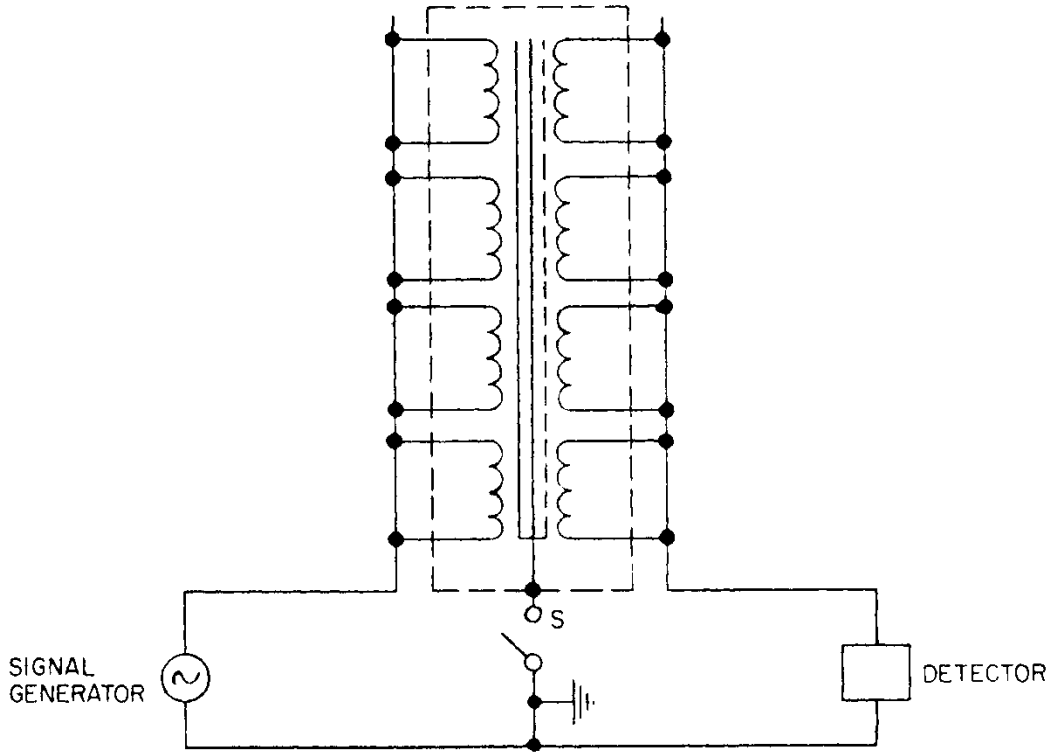

FIGURE 6. Electrostatic-shielding circuit.

Source: https://assist.dla.mil -- Downloaded: 2016-11-03T19:01Z
Check the source to verify that this is the current version before use.

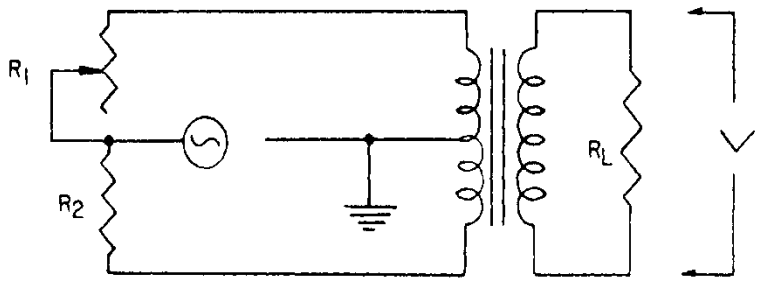

FIGURE 7. Center-tap balance.

Source: https://assist.dla.mil -- Downloaded: 2016-11-03T19:01Z
Check the source to verify that this is the current version before use.

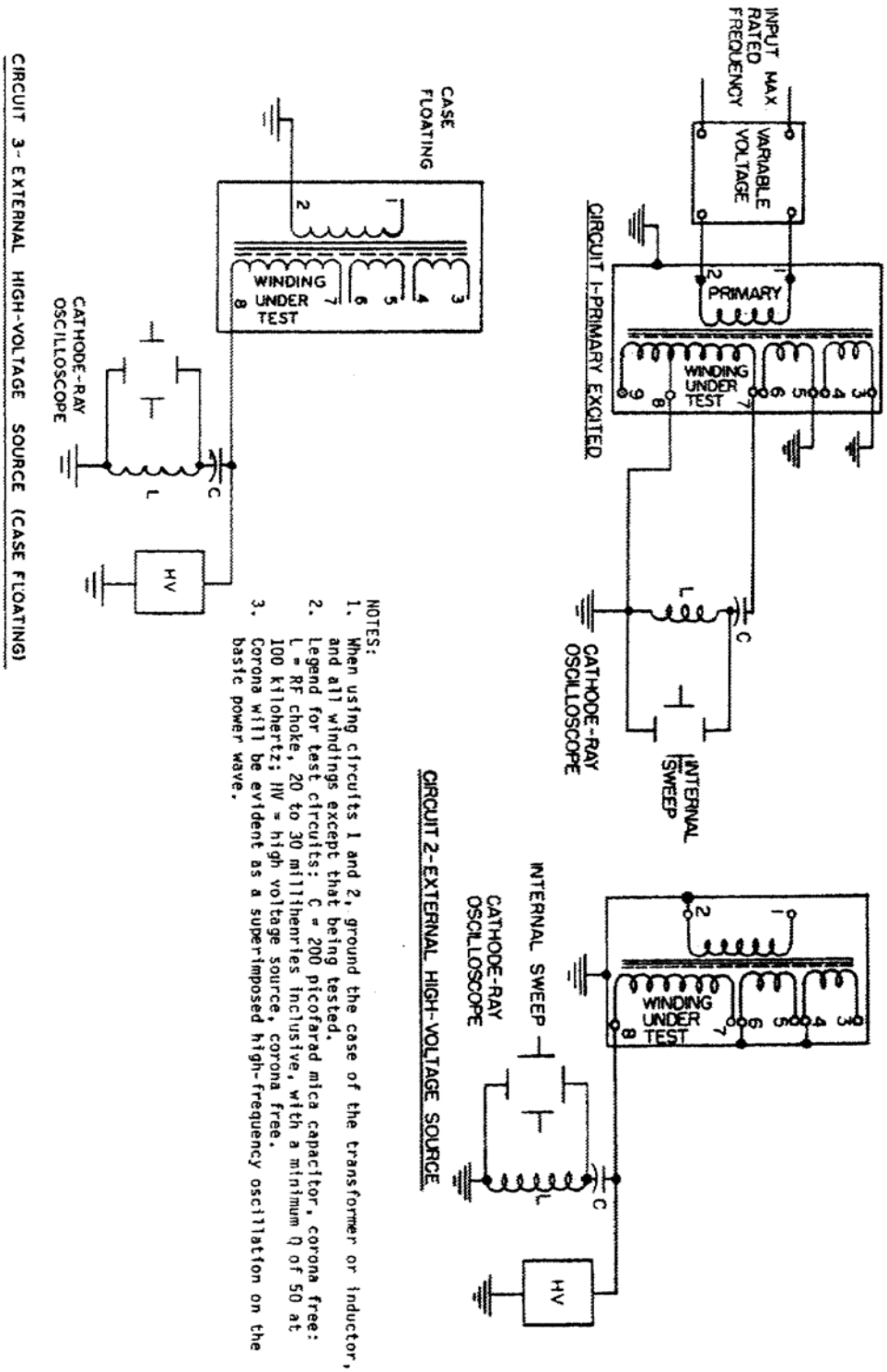

NOTES:

1. When using circuits 1 and 2, ground the case of the transformer or inductor, and all windings except that being tested.
2. Legend for test circuits: C = 200 picofarad mica capacitor, corona free: L = RF choke, 20 to 30 millihenries inclusive, with a minimum Q of 50 at 100 kilohertz; HV = high voltage source, corona free.
3. Corona will be evident as a superimposed high-frequency oscillation on the basic power wave.

FIGURE 8. Corona test circuits.

Source: https://assist.dla.mil -- Downloaded: 2016-11-03T19:01Z
Check the source to verify that this is the current version before use.

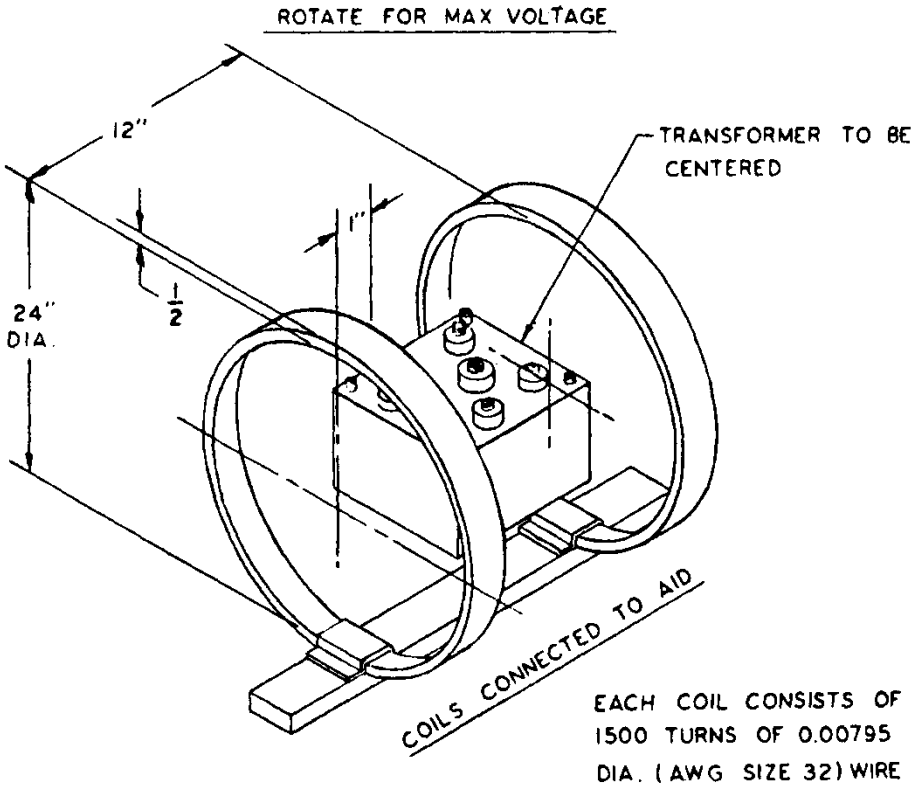

FIGURE 9. Helmholtz structure for magnetic shielding.

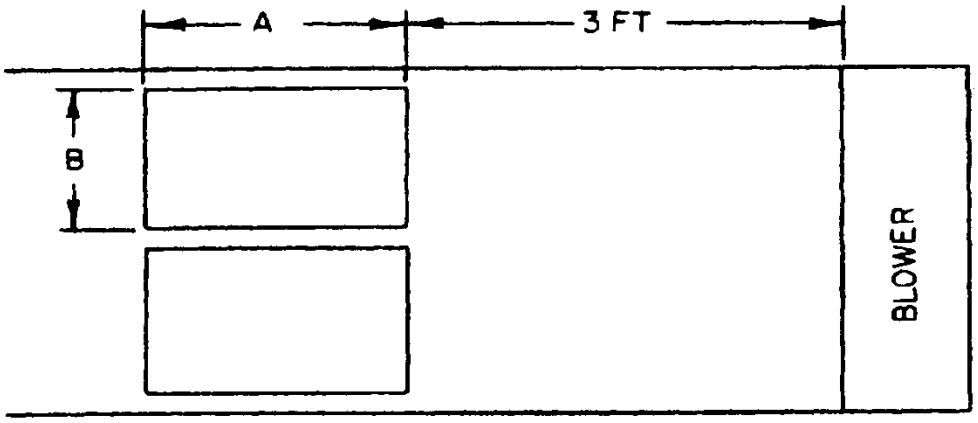

FIGURE 10. Typical mounting of units for method III of temperature rise test.

Source: https://assist.dla.mil -- Downloaded: 2016-11-03T19:01Z
Check the source to verify that this is the current version before use.

APPENDIX A

PROCEDURE FOR QUALIFICATION INSPECTION

A. SCOPE

A.1 Scope. This appendix establishes an evaluation system for transformers and inductors manufactured in accordance with this specification. The manufacturer must maintain and demonstrate this system to the qualifying activity as a prerequisite for qualification and retention of qualification. This appendix is a mandatory requirement of this specification. The information contained herein is intended for compliance.

A.2. APPLICABLE DOCUMENTS. This section is not applicable.

A.3. SUBMISSION

A.3.1 Product levels. Qualification of the C level is predicated upon meeting the qualification requirements for M level (see A.4.1). Qualification of the T level can be the basis for extending qualification to the M level and also the C level (see A.4.1). The procedure for submitting samples to become qualified for the M level and T is specified in A.3.2

A.3.2 Sample.

A.3.2.1 Single-type submission. A sample consisting of seven of each type of transformer or inductor for which qualification is sought must be subjected to the tests of table V. Three sample units must be subjected to the inspections of group I. Seven sample units which include the three units from group I must be subjected to the inspections of group II. Five sample units must be subjected to the inspections of group III. The two remaining sample units from group II must be subjected to the inspection of group IV. Two additional sample units will be required for group V, if the fungus test is performed.

A.4. EXTENSION OF QUALIFICATION

A.4.1 Extent of qualification by similarity. The qualification sample selected in accordance with 3.1 of appendix can be used as the basis for extending qualification to similar transformers (i.e., other than the PIN selected in 3.2 of appendix). Generally this extension must be in accordance with the following requirements, however, the manufacturer may propose additional extensions for approval by the qualifying activity. (NOTE: The specific specification sheet may provide additional recommendations for part qualification extensions.)

a. Extension of qualification may be granted for similar products in a given specification sheet. Typically, these products would be manufactured using the same or similar materials (e.g., same plastics for the case, same lead materials and finishes, etc.).
b. Products must be manufactured in the same facility using manufacturing processes and materials that were used to manufacture the product originally qualified.
c. If the manufacturer wants to extend qualification to additional lead and terminal finishes other than that originally qualified, qualification will be based on certification by the manufacturer that all requirements of this specification are met by the alternate lead/finish.

To facilitate consideration of alternative extent of qualification proposals, the qualifying activity may request the manufacture to demonstrate capability by existing internal test data similar to the group A and group B inspections.

A.4.2 Extension of qualification from M level to C level and T level. Upon successful qualification of M level, the manufacturer may request qualification to C level and T level of this specification. The products involved must be the same design and manufactured in the same facilities using the same processes and materials as the M level parts. C level and T level qualification will only be granted for the same envelope of products for which M level qualification was granted (see A 4.1). To obtain qualification to the T level, the manufacturer must also meet additional requirements in Group A subgroup I as well as being approved by the qualifying activity on the capability to conduct tests and examinations for T level product.

Source: https://assist.dla.mil -- Downloaded: 2016-11-03T19:01Z
Check the source to verify that this is the current version before use.

RADIOGRAPHIC INSPECTION

B. SCOPE

B.1 Scope. This appendix contains details for performance of the radiographic inspection for devices specified in accordance with this standard. This appendix is a mandatory part of this specification. The information contained herein is intended for compliance only.

B.2. APPLICABLE DOCUMENTS. This section is not applicable to this appendix.

B.3. RADIOGRAPHIC INSPECTION

B.3.1 Radiographic inspection. Devices must be tested in accordance with Method 209 of MIL-STD-202. The following details and exceptions shall apply:

a. Radiographic quality: The radiograph shall render a clear sharp image of the penetrameter.
b. Image quality indicator: A radiograph of the penetrameter shall be included on each radiograph film. The penetrameter may be made from a sample of the same type as that being radiographed, with an AWG number 48 tungsten wire mounted across the body.

B.3.1.1 Transformers and inductors. Examples of typical construction and terminology are shown on figure B-1.

B.3.1.1.1 Views. Radiographs shall be taken of each device in each of the three axes; X,Y, and Z. When inadequate coverage is provided, additional views shall be taken as deemed necessary to satisfy the criteria defined herein. Axial orientation is shown in figure B-2.

B.3.1.1.2 Examination. The radiographic examination shall include, but not be limited to, inspection for extraneous materials, alignment, clearance and processing damage.

B.3.1.1.2.1 Extraneous material. There shall be no visible extraneous materials that can cause damage to insulation or electrical short circuit between conductors or connections. Loose or excessive material such as weld or solder plash, solder balls and short lengths of unattached wire shall be considered extraneous material (see figure B-3). If the extraneous material is fully embedded in material with a measurable shore D hardness, and DWV testing has been performed to verify that the material does not cause damage or short circuit, it shall be considered acceptable.

Acceptable Conditions:

A. Extraneous material (as described above) that is located near a single wire or conductor, and cannot cause damage or short circuit, is acceptable. See Figure B-3 (1 of 5) and Figure B-3 (2 of 5).
B. Extraneous material (as described above) that is located near two or more conductors, and has.010” or greater between the conductors and extraneous material. See figure B-3 (1 of 5).
C. Extraneous material (as described above) that is entrapped within a soft (RTV type) material, and is .125” or greater than from any two conductors.

Rejectable Conditions:

D. Extraneous material (as described above) that is less than .010” between any two conductors or wires, shall be rejectable, regardless of size. See Figure B-3 (3 of 5) and Figure B-3 (4 of 5).
E. Extraneous material (as described above) that is embedded within a soft compound, such as RTV, with less than .125” between the conductors and extraneous material. See Figure B-3 (3 of 5) and Figure B-3 (5 of 5).
F. Any unattached wire clipping within the coil assembly. See Figure B-3 (4 of 5).

Source: https://assist.dla.mil -- Downloaded: 2016-11-03T19:01Z
Check the source to verify that this is the current version before use.

B.3.1.1.2.2 Alignment and clearances. Acceptable parts shall exhibit adequate internal electrical and mechanical clearances. Criteria for determining adequate clearance by inspection of radiographs shall be established by each manufacturer and must be approved by the qualifying activity, except as specified otherwise herein. Unacceptable alignment and clearances include the following:

a. Insufficient clearance between wires and metallic case, other conductive support, or external surfaces. (see figure B-4).
b. Lead wire under tension that can be subjected to further stress under thermal expansion (see figure B-4g).
c. Inadequate clearance of wires and installation holes, wherein the wires can be damaged in installation.
d. Inadequate clearance between adjacent terminals due to pigtails of the wires, or wire alignment.
e. Inadequate clearance between wires (see figure B-4b).

B.3.1.1.2.3 Processing damage. Unacceptable processing includes the following:

a. Raveled or frayed wire ends that can separate or pierce insulation, other wires or parts. (see figures B-5a and B-6a)
b. Partially broken wire strands. Multiple strand wire in which one or more strands have separated (see figure B-5b).
c. Missing or incomplete soldering or welding of connections (see figures B-5c and B-6d).
d. Excess lengths of wires that are unsupported and can move freely under mechanical or thermal stress (see figure B-5d).
e. Unauthorized splices or repair of broken wire or terminals (see figures B-5e and B-6c).
f. Voids in encapsulant in contact with the lead between the coil and external surface that completely surround the wire or, although not surrounding the wire, extend greater than 20 percent of the distance from the coil to the external surface (see figures B-5f and B-5g).
g. Cracked or damaged core (see figure B-6f).
h. Encapsulation cracks that intersect any magnet wire gauge 30 or finer.

B.3.1.1.2.4 Miscellaneous. Cracked, broken or improperly assembled core, deformed or bent parts, and voids in the seal shall be cause to reject a part.

Source: https://assist.dla.mil -- Downloaded: 2016-11-03T19:01Z
Check the source to verify that this is the current version before use.

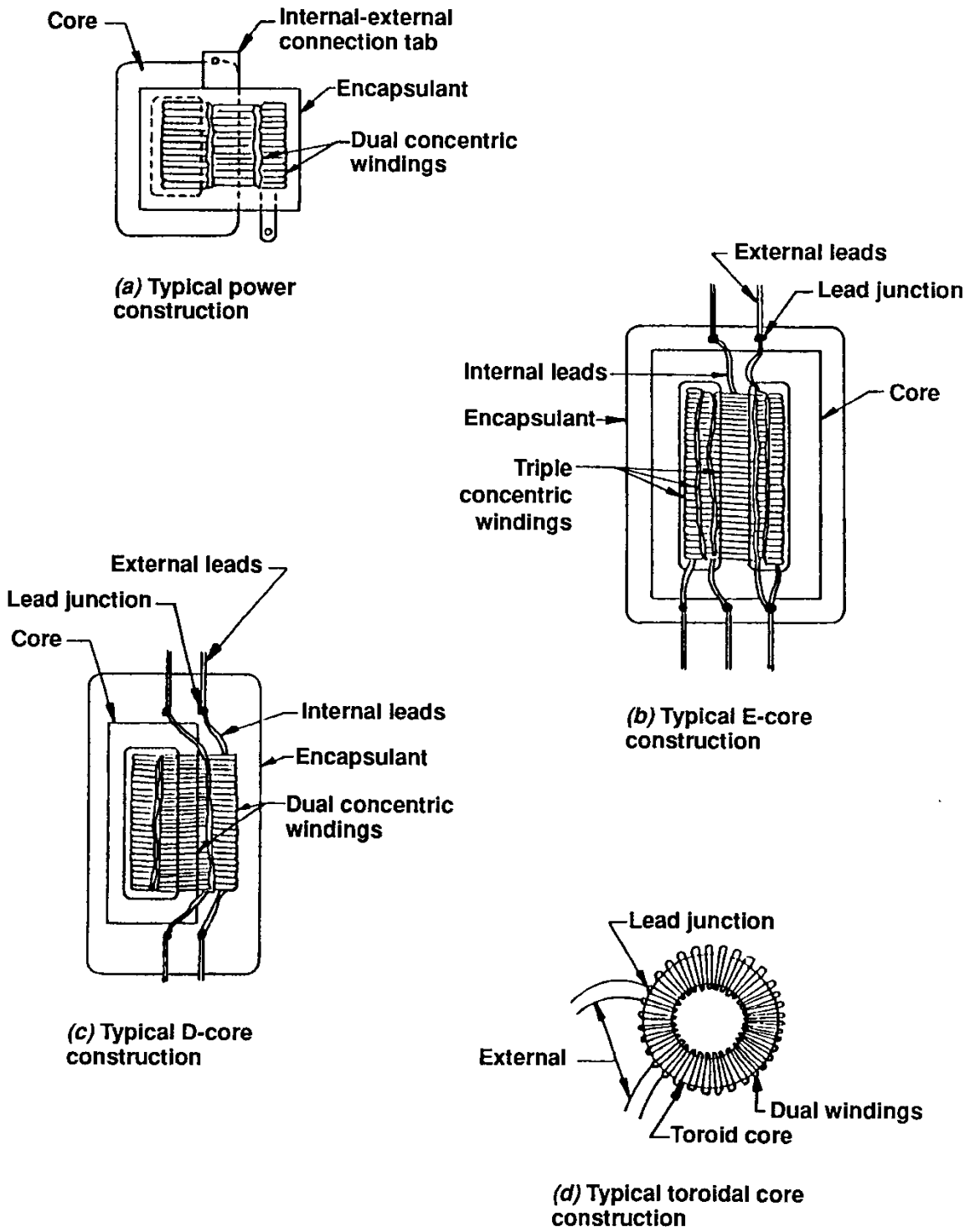

FIGURE B-1. A typical transformer/ inductor construction.

Source: https://assist.dla.mil -- Downloaded: 2016-11-03T19:01Z
Check the source to verify that this is the current version before use.

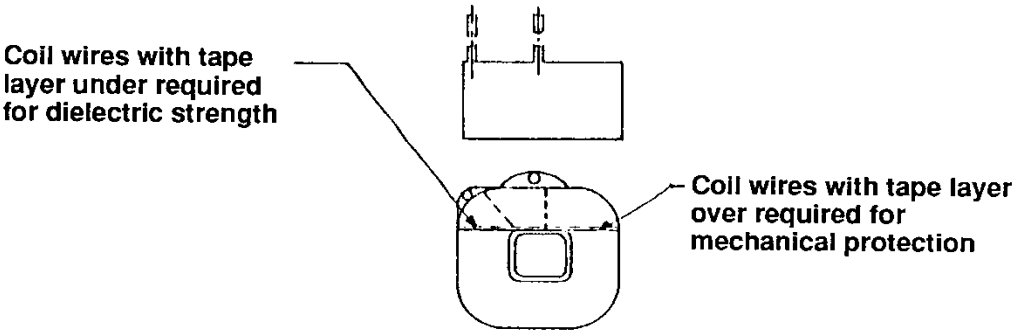

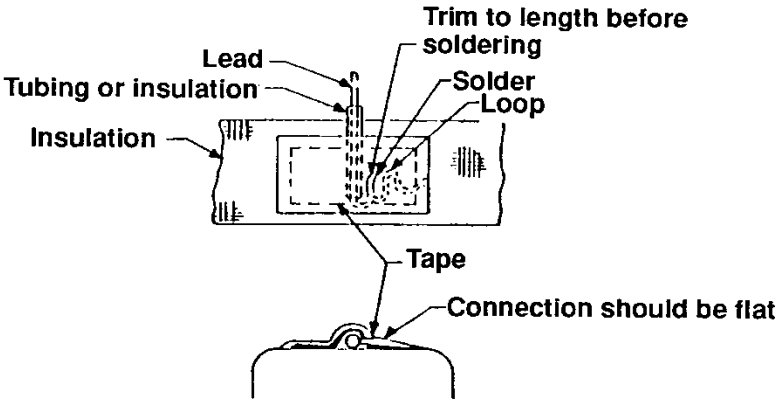

FIGURE B-1. A typical transformer/ inductor construction – Continued.

Source: https://assist.dla.mil -- Downloaded: 2016-11-03T19:01Z
Check the source to verify that this is the current version before use.

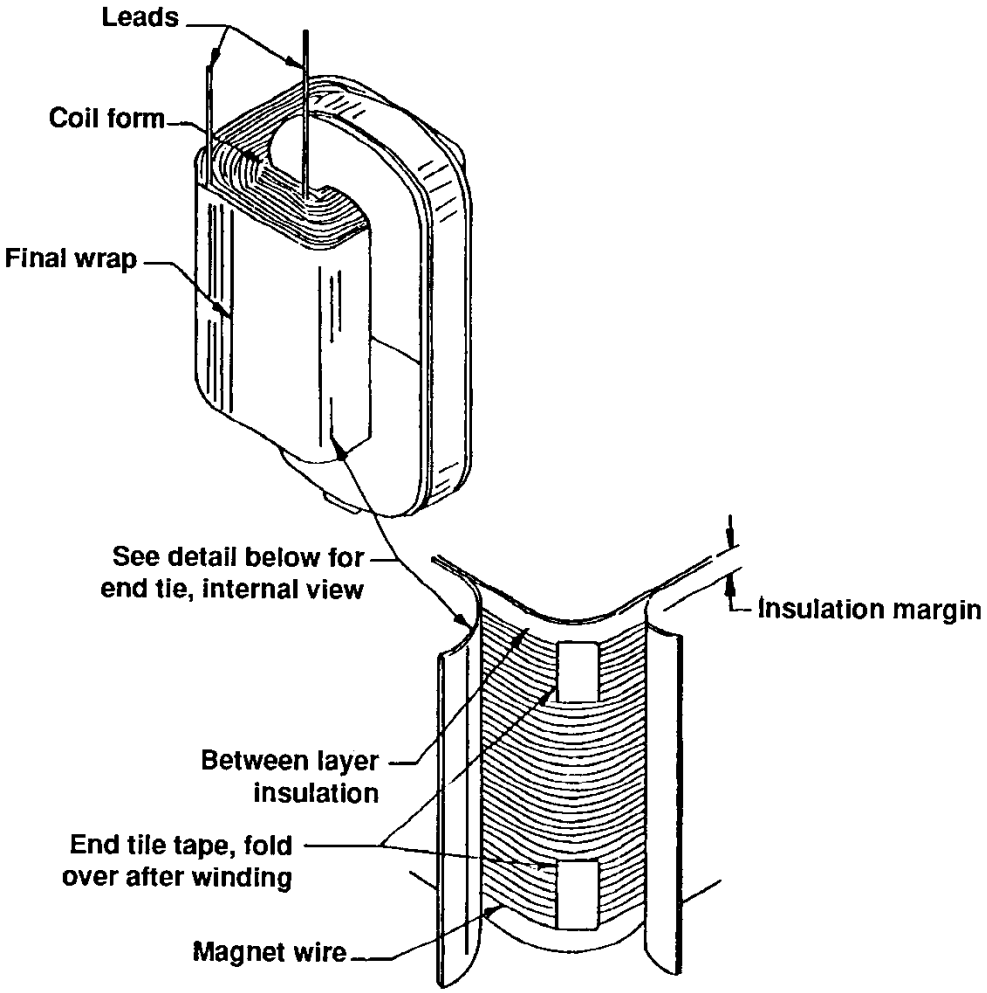

FIGURE B-1. A typical transformer/ inductor construction – Continued.

Source: https://assist.dla.mil -- Downloaded: 2016-11-03T19:01Z
Check the source to verify that this is the current version before use.

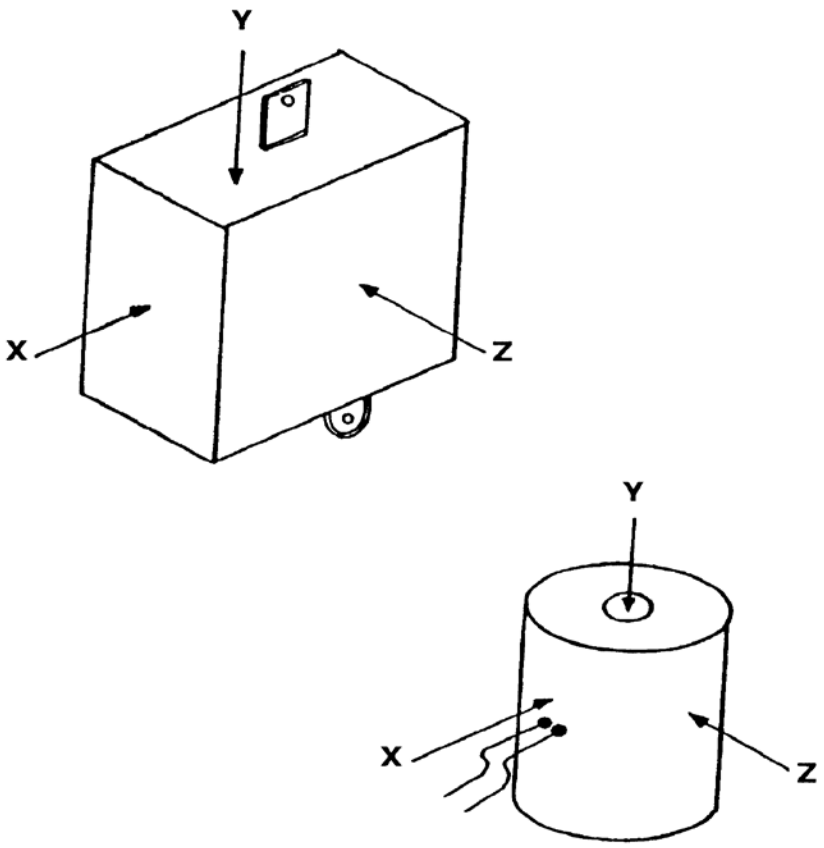

FIGURE B-2. Axial orientation.

Source: https://assist.dla.mil -- Downloaded: 2016-11-03T19:01Z
Check the source to verify that this is the current version before use.

ACCEPTABLE CONDITIONS:

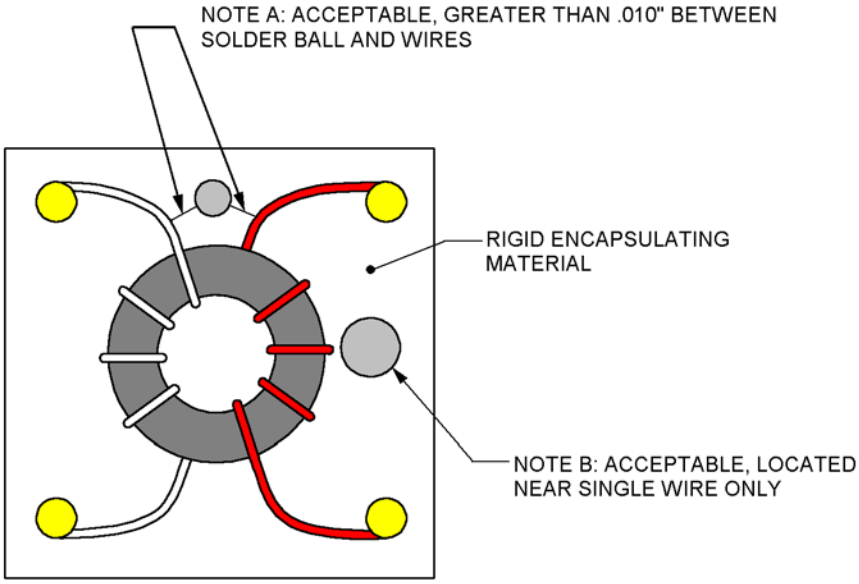

FIGURE B-3 (1 of 5). Acceptable/rejectable extraneous material.

Source: https://assist.dla.mil -- Downloaded: 2016-11-03T19:01Z
Check the source to verify that this is the current version before use.

ACCEPTABLE

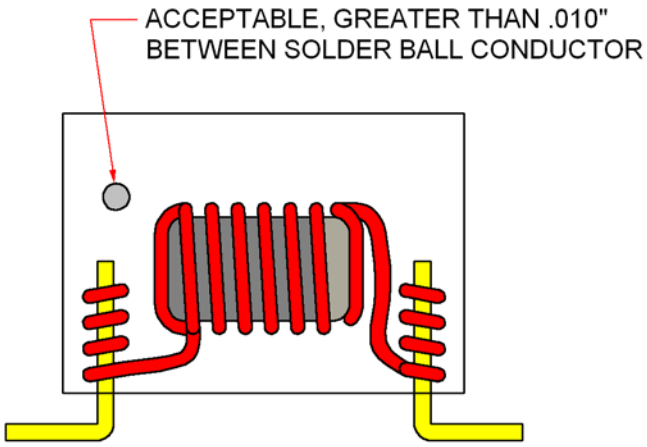

FIGURE B-3 (2 of 5). Acceptable/rejectable extraneous material.

Source: https://assist.dla.mil -- Downloaded: 2016-11-03T19:01Z
Check the source to verify that this is the current version before use.

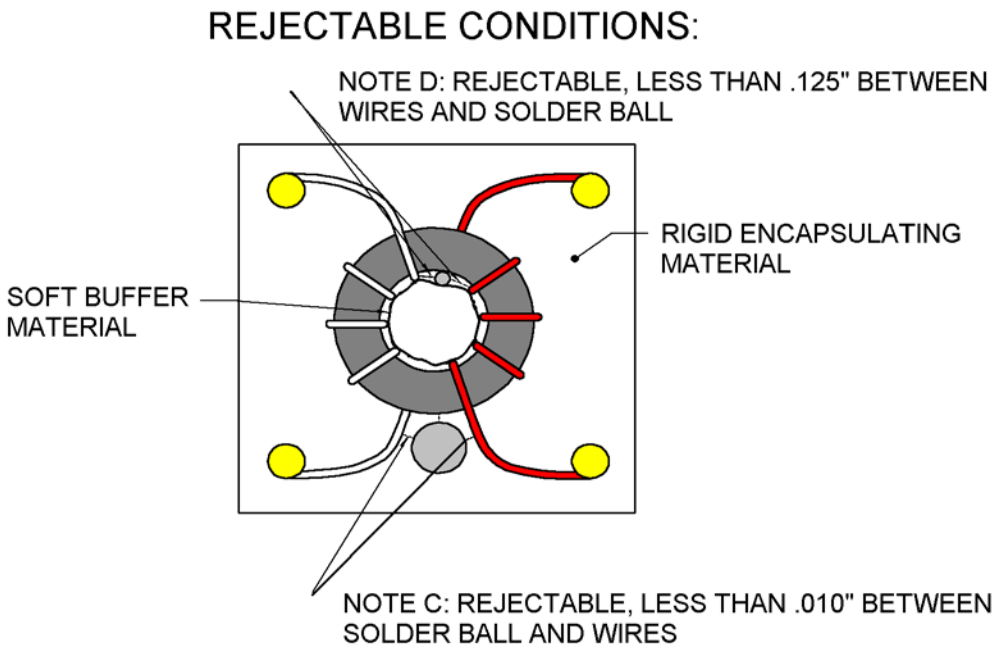

FIGURE B-3 (3 of 5). Acceptable/rejectable extraneous material.

Source: https://assist.dla.mil -- Downloaded: 2016-11-03T19:01Z
Check the source to verify that this is the current version before use.

REJECTABLE

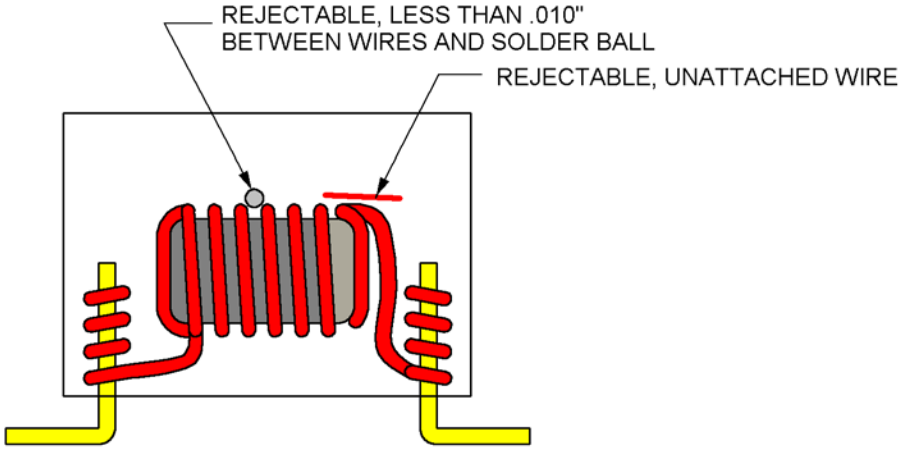

FIGURE B-3 (4 of 5). Acceptable/rejectable extraneous material.

Source: https://assist.dla.mil -- Downloaded: 2016-11-03T19:01Z
Check the source to verify that this is the current version before use.

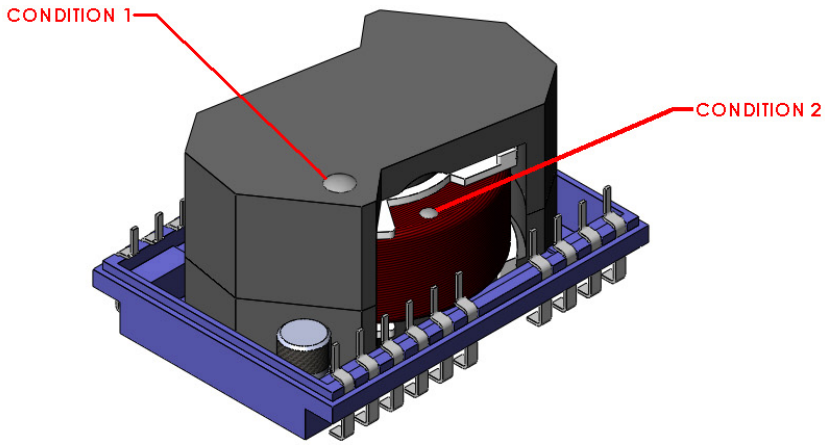

Note: This drawing depicts a transformer that is coated with a soft (RTV) material, and is then encapsulated with a hard (Shore D measurable) material.

This criteria applies only to particles that are verified to be entrapped within the soft material.

Condition 1: Acceptable – Particle is entrapped within soft material, and is located greater than .125” from any conductor.

Condition 2: Rejectable – Particle is entrapped within soft material, and is located less than .125” from any conductor.

FIGURE B-3 (5 of 5). Acceptable/rejectable extraneous material.

Source: https://assist.dla.mil -- Downloaded: 2016-11-03T19:01Z
Check the source to verify that this is the current version before use.

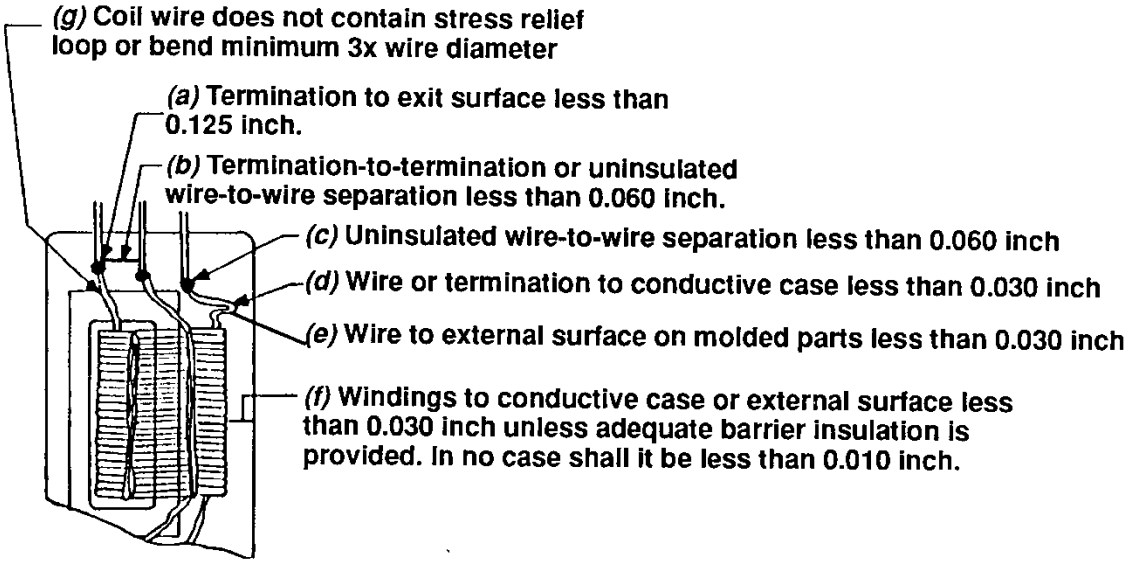

FIGURE B-4. Unacceptable alignment and clearances.

Source: https://assist.dla.mil -- Downloaded: 2016-11-03T19:01Z
Check the source to verify that this is the current version before use.

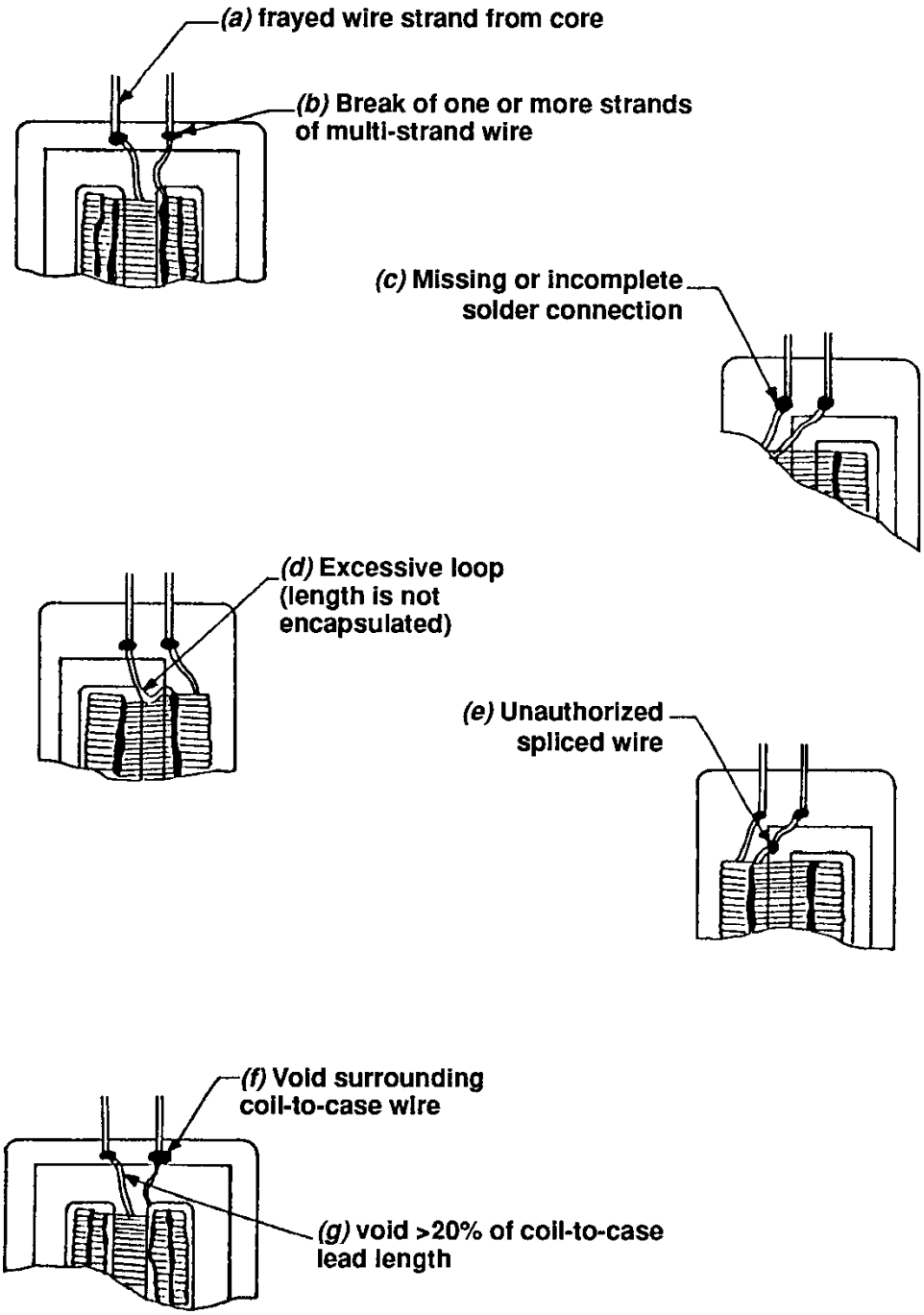

FIGURE B-5. Unacceptable processing.

Source: https://assist.dla.mil -- Downloaded: 2016-11-03T19:01Z
Check the source to verify that this is the current version before use.

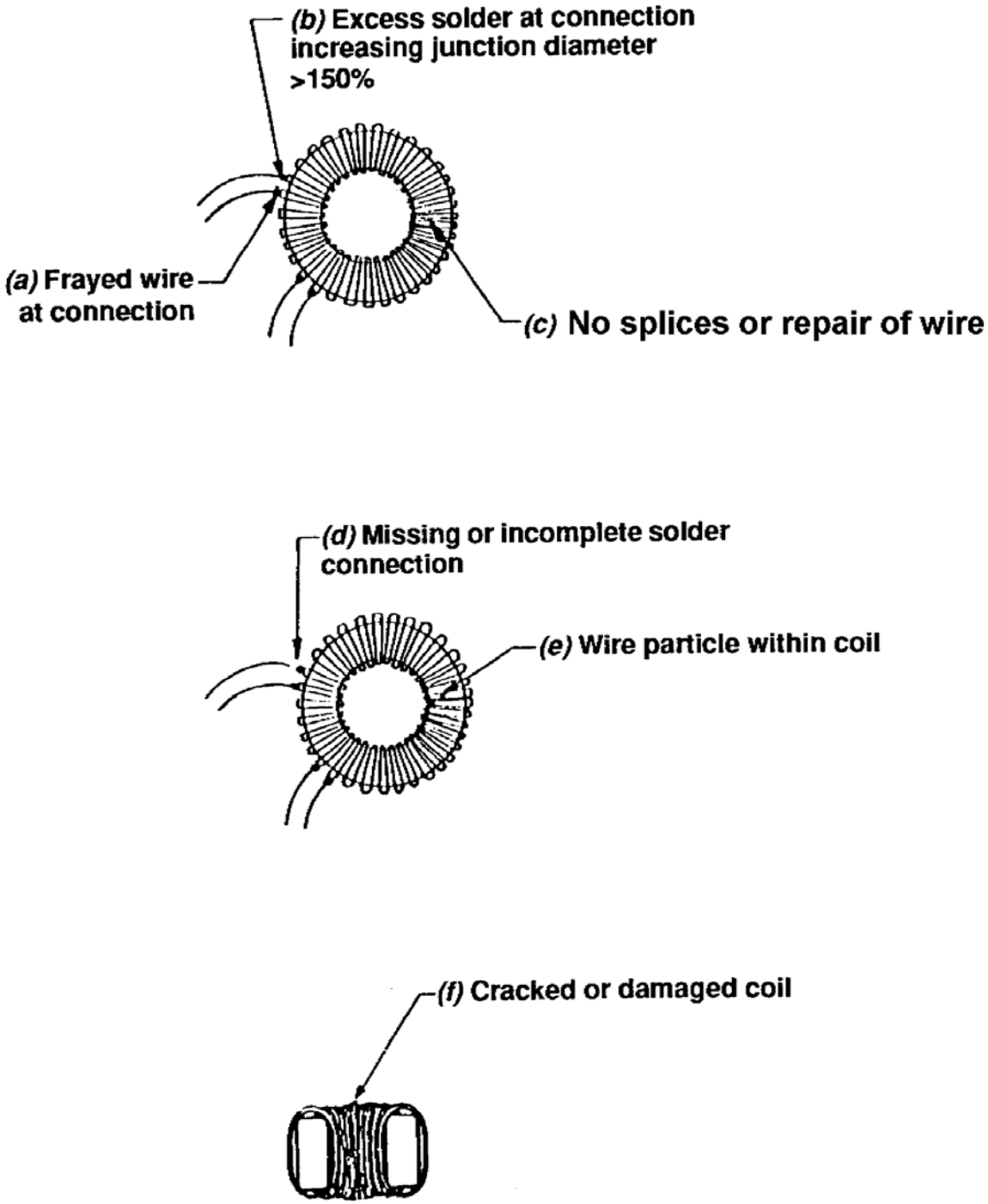

FIGURE B-6. Unacceptable processing damage - toroidal core.

Source: https://assist.dla.mil -- Downloaded: 2016-11-03T19:01Z
Check the source to verify that this is the current version before use.

Custodians:
Army - CR
Navy - EC
Air Force - 85
DLA – CC

Review activities:
Air Force - 11
Army - AR, CR4
Navy – AS, MC
Other - MDA

Preparing activity:
DLA - CC

(Project 5950-2012-002)

NOTE: The activities listed above were interested in this document as of the date of this document. Since organizations and responsibilities can change, you should verify the currency of the information above using the ASSIST Online database at https://assist.dla.mil.

Source: https://assist.dla.mil -- Downloaded: 2016-11-03T19:01Z
Check the source to verify that this is the current version before use.