INCH-POUND

MIL-S-3786F
29 July 1990
SUPERSEDING
MIL-S-3786E
3 September 1980

MILITARY SPECIFICATION

SWITCHES, ROTARY (CIRCUIT SELECTOR, LOW-CURRENT CAPACITY), GENERAL SPECIFICATION FOR

This specification is approved for use by all Departments and Agencies of the Department of Defense.

1 SCOPE

1.1 Scope. This specification covers the general requirements for circuit selector, rotary switches, designed for low power, alternating current (ac) or direct current (dc) switching applications (capable of making and breaking a resistive load of 2 amperes or less, unless otherwise specified (see 3.1), which are primarily for use in electronic and communications equipment. Acquisition of switches of a design covered by a specification sheet will require additional data as specified in 6.2.2. Acquisition of switches of a design not covered by a specification sheet will require additional data, giving detailed electrical and mechanical requirements, tolerances, and applicable additions and exceptions to the general requirements and tests specified herein (see 6.2.3). Switches which differ because of electrical configuration, shape, or size of operating shaft, type of construction, number of switch sections (see 6.2.6), (see 3.2), bushing length, temperature life characteristic, angle of throw, vibration grade, shock type, insulation, or altitude are considered to be standard switches under a particular style (see 3.2), provided they meet the envelope size and dimensional, environmental, and electrical requirements of the particular style.

1.2 Classification.

1.2.1 Military Part or Identifying Number (PIN). The term Part or Identifying Number (PIN) is equivalent to the term part number which was previously used in this specification. The military PIN (when applicable) shall consist of the letter "M", the basic number of the specification sheet, and an assigned dash number (see 3.1). The dash number shall be either sequentially-assigned or coded, as shown in the following examples:

M	3786/XX	-0001
Military designation	Specification sheet number	Sequentially-assigned dash number
	OR	
M	3786/XX	-8BKJ
Military designation	Specification sheet number	Coded dash number (see individual specification sheet for formulation)

Beneficial comments (recommendations, additions, deletions) and any pertinent data which may be of use in improving this document should be addressed to: Electronic Support Division AFLC, 2750 ABW/ES, Gentile AF Station, Dayton, OH 45444-5000, by using the self-addressed Standardization Document Improvement Proposal (DD Form 1426) appearing at the end of this document or by letter.

FSC 5930

AMSC N/A. Approved for public release; distribution unlimited.

Source: https://assist.dla.mil -- Downloaded: 2016-11-13T00:49Z
Check the source to verify that this is the current version before use.

1.2.2 Type designation (The type designation does not fully describe the individual rotary switch since the electrical configuration and number of switch sections are not included therein.) The type designation shall be in the following form (see 6.2.2)

SR01	B	15	A	1	M	C	C	A
Style (1.2.2.1)	Construction (1.2.2.2)	Angle of throw (1.2.2.3)	Temperature life characteristic (1.2.2.4)	Vibration grade (1.2.2.5)	Shock type (1.2.2.6)	Insulation (1.2.2.7)	Altitude (1.2.2.8)	Special features (1.2.2.9)

1.2.2.1 Style. The style is identified by the two-letter symbol "SR" followed by a two-digit number that describes the specification sheet. The letters identify low current capacity, circuit selector rotary switches, the number identifies the design and configuration covered by a single specification sheet, dictating the basic physical, mechanical, and electrical characteristics of the switch. The style number is designated in the title of each specification sheet.

1.2.2.2 Construction. The construction is identified by a single letter in accordance with table I.

TABLE I. Construction

Symbol	Type of construction
B	Totally closed construction, without sealed shaft and panel seal
C	Totally closed construction, with sealed shaft and panel seal
E	Explosion-proof, totally closed construction without sealed shaft and panel seal.
F	Explosion-proof, totally closed construction with sealed shaft and panel seal
J	Explosion-proof, flux-proof, totally closed construction without sealed shaft and panel seal.
K	Explosion-proof, flux-proof, totally closed construction with sealed shaft and panel seal.
N	Open construction, without sealed shaft and panel seal
S	Open construction, with sealed shaft and panel seal

1.2.2.3 Angle of throw. The angle of throw (see 6.7.2) is identified by a two-digit number. For angles of throw that are fractions of a degree, the closest, lower, whole number shall be used.

Source: https://assist.dla.mil -- Downloaded: 2016-11-13T00:49Z
Check the source to verify that this is the current version before use.

1.2.2.4 Temperature life characteristic. The temperature life characteristic is identified by a single letter, indicating the temperature range and the electrical rotational life of the switch, in accordance with table II.

TABLE II. Temperature life characteristic

Symbol	Life (rotational) (rotational cycles)	Temperature range 1/ °C
A 2/	10,000	-65 and +125
B	25,000	-65 and +85
C	25,000	-65 and +125
D	50,000	-65 and +85
E	50,000	-65 and +125
F	100,000	-65 and +85

1/ -65°C pertains to thermal shock (see 3.11 and 4.8.6). +85°C and +125°C pertain to life (rotational) (see 3.23 and 4.8.18).
2/ Symbol A not for new design.

1.2.2.5 Vibration grade. The vibration grade is identified by a single digit in accordance with table III.

TABLE III. Vibration grade

Symbol	Frequency range (Hz)
1	10 to 55
2	10 to 500
3	10 to 2,000

1.2.2.6 Shock type. The shock type is identified by a single letter in accordance with table IV.

TABLE IV. Shock type

Symbol	Type of shock
M	Medium impact (method I)
H	High impact (method II)
S	Medium and high impact (method I and method II)

1.2.2.7 Insulation. The insulation material for the switch stator shall be identified by a single letter in accordance with table V (see 3.4.2).

TABLE V. Insulation

Symbol	Material
C	Ceramic or glass-bonded mica
G	Glass laminate
P	Plastic

Source: https://assist.dla.mil -- Downloaded: 2016-11-13T00:49Z
Check the source to verify that this is the current version before use.

[illegible] Altitude. The altitude [illegible] of the switch is identified by a single letter in accordance with table VI.

TABLE VI Altitude

Symbol	Altitude (ft.)	Pressure (in. of Hg.)
B	Up to 10,000	---
C	70,000	1.31
D	100,000	0.315

1.2.2.9 Special features. Switches having capabilities of low level circuit, EMI/RFI shielding, grounded shaft, or any combination thereof, shall be identified by a single letter in accordance with table VII.

TABLE VII Special features

Contact load rating	Both shaft grounding and EMI/RFI capability	Shaft grounding	EMI/RFI capability	Neither shaft grounding or EMI/RFI capability
[illegible] and low	[illegible]	[illegible]	[illegible]	[illegible]
High	[illegible]	E	F	No designation required
Low	G	H	J	L

2. APPLICABLE DOCUMENTS

2.1 Government documents.

2.1.1 Specifications, standards, and handbooks. The following specifications, standards, and handbooks form a part of this document to the extent specified herein. Unless otherwise specified, the issues of these documents are those listed in the issue of the Department of Defense Index of Specifications and Standards (DODISS) and supplement thereto, cited in the solicitation (see 6.2).

SPECIFICATIONS

FEDERAL

L-P-385 - Plastic Molding and Extrusion Material, Polychlorotrifluoroethylene.
QQ-N-290 - Nickel Plating (Electrodeposited)
QQ-P-416 - Plating, Cadmium (Electrodeposited)
QQ-S-571 - Solder, Tin Alloy, Lead Tin Alloy, and Lead Alloy
LLL-R-626 - Rosins, Gum, Wood, and Tall Oil

Source: https://assist.dla.mil -- Downloaded: 2016-11-13T00:49Z
Check the source to verify that this is the current version before use.

MILITARY

MIL-I-10	-	Insulating Compound, Electrical, Ceramic, Class L
MIL-P-997	-	Plastic Material, Laminated, Thermosetting, Electrical Insulation Sheets, Glass Cloth, Silicone Resin
MIL-A-8625	-	Anodic Coating for Aluminum and Aluminum Alloys
MIL-P-13949	-	Plastic Sheet, Laminated, Metal-Clad (For Printed Wiring), General Specification for.
MIL-F-14256	-	Flux, Soldering, Liquid (Rosin Base)
MIL-P-18177	-	Plastic Sheet, Laminated, Thermosetting, Glass Fiber Base, Epoxy-Resin
MIL-M-24519	-	Molding Plastics, Electrical, Thermoplastic.
MS25082	-	Nut, Plain, Hexagon, Electrical-Thin
MIL-S-28786	-	Switches, Preparation for Delivery of.
MS35333	-	Washer, Lock, Flat-Internal Tooth.
MIL-I-46053		Insulating Compound, Electrical (For Coating Printed Circuit Assemblies).
MIL-P-55110	-	Printed Wiring Boards
MIL-I-81023	-	Inductor, 28 V dc, Laboratory Test, General Specification for.
MS91528	-	Knobs-Control, Plastic (Round, Concentric, Pointer, Spinner Slip Clutch, Bar, Tactile, Knob Lock Pointer, and Knob Locks.

(See supplement 1 for list of applicable specification sheets.)

STANDARDS

FEDERAL

FED-STD-H28	-	Screw-Thread Standards for Federal Services
FED-STD-406	-	Plastics Methods of Testing

MILITARY

MIL-STD-105		Sampling Procedures and Tables for Inspection by Attributes.
MIL-STD-202	-	Test Methods for Electronic and Electrical Component Parts.
MIL-STD-454	-	Standard General Requirements for Electronic Equipment.
MIL-STD-889	-	Dissimilar Metals
MIL-STD-1285	-	Marking of Electrical and Electronic Parts
MIL-STD-45662	-	Calibration Systems Requirements.

(Unless otherwise indicated, copies of federal and military specifications, standards, and handbooks are available from the Naval Publications and Forms Center, (ATTN NPODS), 5801 Tabor Avenue, Philadelphia, PA 19120-5099.)

2.2 Non-Government publications. The following documents form a part of this document to the extent specified herein. Unless otherwise specified, the issues of the documents which are DoD adopted are those listed in the issue of the DODISS cited in the solicitation. Unless otherwise specified, the issues of documents not listed in the DODISS are the issues of the documents cited in the solicitation (see 6.2).

AMERICAN SOCIETY FOR TESTING AND MATERIALS (ASTM)

ASTM B633	-	Zinc On Iron and Steel, Electrodeposited Coatings of
ASTM D4066	-	Nylon Injection and Extrusion Materials

(Application for copies of ASTM publications should be addressed to the American Society for Testing and Materials, 1916 Race Street, Philadelphia, PA 19103.)

Source: https://assist.dla.mil -- Downloaded: 2016-11-13T00:49Z
Check the source to verify that this is the current version before use.

SOCIETY OF AUTOMOTIVE ENGINEERS (SAE)

SAE HS J1086 - Unified Numbering System for Metals and Alloys

(Application for copies should be addressed to Society of Automotive Engineers, Inc , 400 Commonwealth Drive, Warrendale, PA 15096)

(Non-Government standards and other publications are normally available from the organizations that prepare or distribute the documents. These documents also may be available in or through libraries or other informational services)

2.3 Order of precedence. In the event of a conflict between the text of this document and the references cited herein (except for related associated detail specifications, specification sheets, or MS standards), the text of this document takes precedence Nothing in this document, however, supersedes applicable laws and regulations unless a specific exemption has been obtained

3. REQUIREMENTS

3.1 Specification sheets. The individual item requirements shall be as specified herein and in accordance with the applicable specification sheet In the event of any conflict between the requirements of this specification and the specification sheet or other complementary document, the latter shall govern (see 6.2).

3.2 Switches types Switches furnished under this specification shall be as listed in 3.2.1, 3.2.2, or 3.2.3 respectively

3 2.1 Switches covered by specification sheets and identified by military PIN's Switches which are completely defined by a military specification sheet (see 3) shall be ordered in accordance with 6 2 1

3 2.2 Switches covered by specification sheets but not identified by military PIN's. For switches covered by a specification sheet but not identified by a military PIN (see 1.2.1), the type designation (see 1.2.2) shall be specified in the complementary documents, such as service drawings or ordering data sheets (see 6.2.2). Such switches shall be acquired from sources listed on the qualified products list for the applicable style.

3 2.3 Switches not covered by a specification sheet. Where there is no specification sheet available, the individual part requirement shall be as specified in complementary documents such as service drawings or ordering data sheets (see 6.2 3) These switches shall be products which have been tested and have passed the inspections specified in 4.6

3.3 Qualification. Switches covered by specification sheets and identified by military PIN's shall be products which are qualified for listing on the applicable qualified products list at the time set for opening of bids (see 4.5 and 6 3) Switches covered by specification sheets but not identified by military PIN's shall be products which are qualified for listing on the applicable qualified products list at the time set for opening of bids (see 4 5 and 6 3) The variations allowed from the specification sheet included in 6.2 are as follows

a. Operating shaft length, diameter, shape, and special construction.

b Deck-to-deck spacing dimensions

c. Optional assemblies such as spring return, push-to-turn actions, and pull-to-turn actions.

Source: https://assist.dla.mil -- Downloaded: 2016-11-13T00:49Z
Check the source to verify that this is the current version before use.

d Terminal angles

e. Bushing length

f Addition of a shield, dust cover, etc

3.4 Material. Material shall be as specified herein. However, when a definite material is not specified, a material shall be used which will enable the switches to meet the performance requirements of this specification. Acceptance or approval of any constituent material shall not be construed as a guaranty of the acceptance of the finished product.

3 4 1 Metals All metal parts, other than current-carrying parts, shall be of corrosion-resistant material, or shall be cadmium plated in accordance with class 2, type II, of QQ-P-416, zinc plated in accordance with type II, service condition [illegible], of QQ-N-290, or anodized in accordance with MIL-A-8625, to resist corrosion Aluminum shall not be used for parts such as the bushing, shaft, and detent Aluminum may be used for the front mounting plate provided it is a minimum of .125 inch thick and shall contain corrosion-resistant steel inserts, when applicable These requirements are also applicable to all supporting structures

3 4 1.1 Ferrous material Ferrous material shall not be used for current-carrying parts.

3 4 1.2 Dissimilar metals (see 6 13). When dissimilar metals are used in [illegible] shall be provided. The use of dissimilar metals in contact, which tend toward active electrolytic corrosion (particularly brass, copper, or steel used in contact with aluminum alloy) is not acceptable However, metal plating or spraying of dissimilar base metals to provide similar or suitable abutting surfaces is permitted The use of dissimilar metals separated by a suitable insulating material is also permitted. Dissimilar metals are defined in MIL-STD-889. The use of corrosion-resistant steel in contact with cadmium plating is allowed.

3 4 2 Insulation

3 4 2 1 Ceramic or glass-bonded mica Ceramic or glass-bonded mica shall be grade L411 or higher, in accordance with MIL-I-10.

3 4.2 2 Plastic No cotton-base laminates or cotton- or cellulose-filled molding materials shall be used. Thermoplastics shall not be used for the stator When used, thermoplastic material shall be in accordance with ASTM D4066 or shall be of a high-temperature polycarbonate material which is self-extinguishing when tested in accordance with method 2021 of FED-STD-406 When specified (see 3 [illegible]), polychlorotrifluoroethylene may be used as spacer and rotor material, and shall be in accordance with L-P-385

3 4 2 3 Glass laminate Glass laminate shall be in accordance with MIL-P-18177 or MIL-P-997.

3 4 2.4 Fungus resistance. All insulation materials shall be nonfungus nutrient in accordance with MIL-STD-454, requirement 4

3 4 2 5 Printed-wiring board Unless otherwise specified (see 3.1), printed-wiring boards shall be designed in accordance with MIL-P-55110 and material shall be type GF in accordance with MIL-P-13949 All edges of the printed-wiring board shall be smooth and free from sharp edges, cracks, or loose fibers. When a conformal coating is specified, the conformal coating used shall be in accordance with MIL-I-46058.

Source: https://assist.dla.mil -- Downloaded: 2016-11-13T00:49Z
Check the source to verify that this is the current version before use.

3 4 3 Protective coatings and finishes Protective coatings and finishes which melt, crack, chip, or scale shall not be used

3 4 4 Solder and soldering flux Solder, when used for electrical connections, shall be composition Sn60 in accordance with QQ-S-571, and soldering flux shall be in accordance with MIL-F-14256

3 5 Design and construction. Switches shall be so constructed as to insure proper operation when mounted in any position. The switches shall be of the design, construction, and physical dimensions specified (see 3 1)

3 5 1 Threaded parts. Unless otherwise specified (see 3.1), all threaded parts shall be in accordance with FED-STD-H28 Wherever possible, unified screw threads shall be used Where a special diameter-pitch combination is required, the thread shall be of American National Form and of any pitch which is used in the fine-thread series.

3 5 1 1 Engagement of threaded parts All threaded parts shall engage at least three full threads in soft metals like aluminum and its alloys A minimum of two full threads shall be used in harder materials such as brass or steel When a screw mates with a plastic part, a threaded metal insert shall be contained therein

3.5 1 2 Locking of screw-thread assemblies. All screw-thread assemblies shall be rendered resistant to loosening under vibration. Unless otherwise specified (see 3.1), bronze, stainless steel, or suitably plated steel, split-type, or internal tooth lockwashers shall be provided under all nuts or screwheads when through bolts are used Mechanical staking or the use of lock nuts is permitted in lieu of lockwashers

3 5 1 3 Through bolts Unless otherwise specified (see 3 1), through bolts or threaded spacers shall be used. For switches that have five sections or less, through bolts shall protrude at least one and one-half threads beyond the nuts securing the last switch section at the rear of the switch unless otherwise specified (see 3 1) For switches that have more than five sections, or that are more than 3 5 inches in length from the mounting surface, the through bolts shall protrude at least 0 250 inch minimum beyond the nuts securing the last switch section at the rear of the switch, unless otherwise specified (see 3 1), to enable the through bolts to be used as auxiliary mounting bolts.

3 5.1.4 Mounting hardware (applicable only to manually-actuated switches) Each switch shall be provided with hexagon nuts, as specified (see 3 1), in accordance with MS25082, except that the material may be stainless steel, one internal-toothed lockwasher in accordance with MS35333, except that the material may be stainless steel, and one nonturn device (see 3.5.7) For direct Government orders, hardware shall be assembled on the bushing Mounting hardware may be omitted when specified (see 6.2)

3 5 2 Stops Stops, when required, shall be furnished and their positions shall be as specified (see 6.2)

3 5.3 Contacts. Contacts shall be of such type that no adjustments are required to complete the rotational life test (see 4 8 18). Contacts shall be either shorting (see 6.7 4) or nonshorting (see 6.7 5).

3 5.3 1 Positive contact alignment In all switch positions, positive alignment of the moving contact shall be made by contact engagement through the longitudinal centerline of the stationary contacts in a plane normal to the switch section

Source: https://assist.dla.mil -- Downloaded: 2016-11-13T00:49Z
Check the source to verify that this is the current version before use.

3 5 4 Terminals. Terminals shall be of the solder type designed to accommodate two wires each having a nominal diameter of 0.032 inch, unless otherwise specified (see 3.1). Provisions shall be made for mechanically anchoring any leads prior to soldering Terminals shall be treated to facilitate soldering over all areas designed to accommodate the wire connections Water lacquer shall not be used as a protective coating. Coatings such as hot solder, hot tin dip, or gold plating are acceptable. When gold plating is used, its thickness shall be a minimum of 15 microinches. Gold flash shall not be acceptable

3 5 5 Operating shafts (applicable only to manually-actuated switches) (see 6.7.1).

3.5.5.1 Operating shaft, single. The single operating shaft shall be metal and shall be insulated from all terminals. The length, shape, and special shaft construction and bushing length shall be as specified (see 3.1). Unless otherwise specified (see 3 1), the knob end of the single operating shaft shall be 0 250 +0.001, -0.003 inch in diameter, or 0 125 +0 001, -0 002 inch in diameter, when applicable The shaft flat shall be located a minimum of 125 inch from the end of the bushing, chamfer, or C-washer, whichever is outermost, and shall extend out to the free end of the shaft.

3.5 5.2 Operating shaft, concentric. Concentric operating shaft shall be stainless steel and shall be insulated from all terminals. The length, shape, and special shaft construction and bushing length shall be as specified (see 3.1). Unless otherwise specified (see 3.1), the knob end of the front assembly drive shaft shall be 0 250 +0 001, -0 003 inch in diameter, single flatted to 0.216 ±0 005 inch, the knob end of the shaft driving the rear decks shall be 0 125 +0.001, -0.002 inch in diameter, single flatted to 0.093 +0.010, -0.000 inch.

3 5 5 3 Shaft flat alignment The shaft flat angle shall be as specified (see 3 1), and shall be dimensioned from the centerline of the nonturn device and shall be within ±5 degrees, unless otherwise specified (see 3.1 and 6.2)

3 5 6 Indexing. Switches shall have a positive detent or indexing mechanism, locating each contact position, except when a spring return action is specified (see 6 2.2). The positive detent or indexing mechanism shall be designed to minimize the possibility of the movable element or elements coming to rest between positions and the spring return mechanism (when specified) shall return to the specified fixed position when operating force is removed, and the movable element or elements must come to rest in a positive detent position. Glass or other fragile materials shall not be used in detent or indexing mechanisms.

3 5.7 Nonturn device (applicable only to manually-actuated switches). A nonturn device, located as specified (see 3.1), which fits a panel hole 0.140 ±0.005 inch in diameter, shall be provided to prevent rotation of the switch assembly with respect to the surface on which the switch is mounted Where the maximum diameter of the switch sections, exclusive of terminal projection, or the spacing between the centerlines of the through bolts is more than 1 inch, the nonturn device shall be located .531 ±.016 inch from the centerline of the shaft, where the maximum diameter of the switch sections, exclusive of terminal projection, or the spacing between the centerlines of the through bolts is 1 inch or less, the nonturn device shall be located .375 ±.016 inch from the centerline of the shaft, unless otherwise specified (see 3.1).

3.6 Circuit configuration. When switches are tested as specified in 4.8.2, the switch-circuit configuration shall conform to the applicable diagram specified (see 3 1) Switches shall make and break the required circuits in all positions of all sections The making and breaking of circuits, in both momentary and detented positions, shall be positive

Source: https://assist.dla.mil -- Downloaded: 2016-11-13T00:49Z
Check the source to verify that this is the current version before use.

3 7 Torque (applicable only to manually-actuated switches)

3 7 1 Rotational. When switches are tested as specified in 4.8.3 and 4.8.3.1 1, the torque required to rotate the shaft from each detent position to the next shall be within the specified limits (see 3.1). When switches are tested as specified in 4.8.3.1.2, the torque shall not deviate by more than 50 percent and shall be within the specified limits (see 3 1).

3 7 2 Stops (applicable only to switches with stops) When switches are tested as specified in 4.8.3 and 4 8 3 2, there shall be no broken, loose, deformed, or displaced parts, nor shall there be any slippage of moving parts.

3 7 3 Strength of mounting bushing. When switches are tested as specified in 4.8.3.3, there shall be no damage to the switch, or loosening or twisting of the bushing relative to the switch front plate assembly, nor shall there be any damage to the nonturn device.

3 8 Terminal strength

3.8 1 Pull When switches are tested as specified in 4.8.4.1, the terminals shall withstand the specified load without breaking or affecting the switching arrangement. A movement of the terminals within the confines of the terminal-anchoring device will be permitted provided continuity of electrical contact is not impaired. If any movement of the terminal is noted, the switch shall be tested to verify that it meets the requirements for dielectric withstanding voltage specified in 3 15.

3.8.2 Bend (when applicable). When switches are tested as specified in 4 8 4 2, there shall be no breakage of terminals, or visible cracks as detected by a 10X optical means in either the terminals or the insulating material

3 9 Contact resistance When measured as specified in 4 8 5, the switch section contact resistance shall not exceed the following values, unless otherwise specified (see 3.1).

a Initial and after vibration and shock tests: 10 milliohms.

b. During thermal shock 500 milliohms

c. After moisture-resistance and salt spray (corrosion) tests 15 milliohms.

d After initial soak and completion of life test 20 milliohms.

3.9 1 Contact resistance (low level circuit) (when specified, see 3.1). When tested as specified in 4.8.5.1, the switch section contact resistance shall not exceed 100 milliohms, unless otherwise specified (see 3 1)

3 10 Positive shaft grounding (when specified, see 3.1). When tested as specified in 4.8 5.2, the shaft-to-bushing resistance shall not exceed the following values

a Initial 1 0 ohm maximum

b Following environmental and mechanical tests 10 0 ohms maximum

3.11 Thermal shock. When switches are tested as specified in 4.8.6, the contact resistance shall not exceed 500 milliohms, and there shall be no mechanical or electrical damage, loosening of rivets or other fastening devices

Source: https://assist.dla.mil -- Downloaded: 2016-11-13T00:49Z
Check the source to verify that this is the current version before use.

3.12 Vibration. When switches are tested as specified in 4.8.7, any pair of mating switch section contacts shall not open for a period of time longer than 10 microseconds (μs) before reclosing unless otherwise specified (see 3.1). After the test, there shall be no change in shaft position, or evidence of broken, loose, deformed, or displaced parts.

3.13 Shock. When switches are tested as specified in 4.8.8.1, any pair of mating switch section contacts shall not open for a period of time longer than 10 μs unless otherwise specified (see 3.1), and when tested as specified in 4.8.8.2, for a period of time not longer than 5 milliseconds unless otherwise specified (see 3.1), before return to the closed position. After the test, there shall be no change in shaft position, or evidence of broken, loose, deformed, or displaced parts.

3.14 Sand and dust (when specified, see 3.1). When switches are tested as specified in 4.8.9, there shall be no evidence of mechanical or electrical damage.

3.15 Dielectric withstanding voltage. When tested as specified in 4.8.10 to 4.8.10.2, inclusive, switches shall withstand the application of the specified voltages without arcing, flashover, breakdown of insulation, or damage. A leakage current greater than 1.0 milliampere shall be considered a failure.

3.16 Coil current (applicable to electromechanically-actuated switches only). When tested as specified in 4.8.11, coil current shall not exceed the value specified (see 3.1).

3.17 Insulation resistance. When measured as specified in 4.8.12, the insulation resistance shall be not less than the following values.

a. Ceramic or glass-bonded mica: 10,000 megohms.

b. Plastic: 1,000 megohms.

c. Glass laminate: 5,000 megohms.

3.18 Bushing and shaft seal (applicable only to constructions -D, -F, -K, and -S switches). When switches are tested as specified in 4.8.13, there shall be no leakage.

3.19 Moisture resistance. When switches are tested as specified in 4.8.14, the insulation resistance, immediately after conclusion of the test and while the switches are still in the humidity chamber, shall be as follows, unless otherwise specified (see 3.1).

a. Ceramic or glass-bonded mica: Greater than 100 megohms.

b. Plastic: Greater than 10 megohms.

c. Glass laminate: Greater than 50 megohms.

At the end of the drying period, the insulation resistance shall be as specified in 3.17. At the conclusion of the test, there shall be no evidence of corrosion, breaking, cracking, spalling, or loosening of terminals outside of the confines of the terminal anchoring device, and mounting hardware shall be readily removable.

3.20 Corona (when specified, see 3.1). When switches are tested as specified in 4.8.15, there shall be no evidence of corona.

3.21 Explosion (applicable only to constructions -E, -F, -J, and -K switches). When switches are tested as specified in 4.8.16, there shall be no explosion within the test chamber, whether or not explosion occurs within the switch.

Source: https://assist.dla.mil -- Downloaded: 2016-11-13T00:49Z
Check the source to verify that this is the current version before use.

3.22 Salt spray (corrosion) When switches are tested as specified in 4.8.17, there shall be no evidence of excessive corrosion Excessive corrosion is defined as corrosion which interferes with the electrical or mechanical performance, or, in the case of plated metals, corrosion which has passed through the plating and exposed the base metal. After the test, mounting hardware shall be readily removable.

3.23 Life (rotational). When switches are tested as specified in 4 8 18 to 4 8 18.3, inclusive, they shall start and remain electrically and mechanically operative During the intervals specified, no evidence of intermittent electrical operation shall occur as noted by operation of a neon lamp or other suitable device. Contacts undergoing low level load test shall not be loaded or monitored by loads exceeding their low level rating. Movement of terminals within the confines of their terminal-anchoring devices shall not constitute a failure. The specified contact-sequential pattern (see 3.6) shall be maintained throughout the test. At the conclusion of the cycling, the rotational torque average (see 4 8 3.1) shall not have changed more than +20 or -30 percent from the initial value (see 3 1) and there shall be no evidence of broken, deformed, displaced, or loose parts

3 23.1 Switch-section alignment (applicable only to nonshorting switches). When switches are tested as specified in 4.8 18, during the period of monitoring for switch-section alignment, the identical circuits, in the first and last sections of the switch, shall both be open for same duration while switching from one position to the next

3 24 Temperature rise (when specified, see 3 1) When tested as specified in 4.8.19, the temperature rise of the switch terminals shall not exceed 20°C above ambient

3 25 Thermal electromotive force (EMF) (when specified, see 3 1) When switches are tested as specified in 4.8.20, the thermal EMF measurement shall be as specified (see 3.1).

3.26 Capacitance (when specified, see 3.1). When switches are tested as specified in 4.8.21, the capacitance measurement shall be as specified (see 3.1)

3.27 Random vibration (when specified, see 3.1). When switches are tested as specified in 4.8 22, any pair of mating switch section contacts shall not open for a period of time longer than 10 µs before reclosing, unless otherwise specified (see 3 1) After the test, there shall be no change in shaft position, or evidence of broken, loose, deformed, or displaced parts

3.28 Solderability. When switches are tested as specified in 4.8.23, 95 percent of the total length of fillet, which is between the standard wrap wire and the terminal, shall be tangent to the surface of the terminal being tested. There shall be no pinholes, voids, etc. A ragged or interrupted line at the point of tangency between the fillet and the terminal under test shall be considered a defect. After the test, there shall be no evidence of fracture, loosening of parts, or any other mechanical failure of the switches. A movement of the terminals within the confines of the terminal-anchoring device will be permitted provided continuity of electrical contact is not impaired. If any movement of the terminal is noted, the switch shall be tested to verify that it meets the requirement for dielectric withstanding voltage specified in 3.15.

3.29 EMI/RFI shielding (when specified, see 3.1). When switches are tested as specified in 4.8.24, the shielding attenuation shall be not less than 60 dB over the frequency range from 100 to 1,000 MHz, unless otherwise specified (see 3 1)

3 30 Flux seal (applicable to J and K construction). When switches are tested as specified in 4.8.25, the contact resistance, dielectric withstanding voltage and insulation resistance shall meet the requirements as specified in 3 9, 3 15, and 3.17.

Source: https://assist.dla.mil -- Downloaded: 2016-11-13T00:49Z
Check the source to verify that this is the current version before use.

3.31 Marking.

3 31 1 Identification of product Switches shall be marked in accordance with MIL-STD-1285 Only the following shall be required.

3.31 1 1 Switches identified by military PIN's

a. Military PIN.

b Manufacturer's name or trademark

c. Date code

d Terminal identification

e Additional mark ng optional.

3 31 1 2 Switches covered by specification sheets but not identified by military PIN

a Type designation

b. Design control drawing/document identification number or manufacturers part number (as applicable).

c Manufacturer s name or trademark

d Date code.

e Terminal identification

f Additional marking optional. Depending on available space to mark product.

3 31 1 3 Switches not covered by a specification sheet.

a. Manufacturer's part number, Government drawing number, or prime contractor's number.

b Manufacturer's name, trademark, or federal supply code for manufacturer

c Date code

d Terminal identification.

3 31 2 Terminal identification. Switch terminals shall be marked with numbers, whose sequence is counterclockwise and visible when viewed from the rear end of the switch, unless otherwise specified (see 3 1). Open-frame construction switches shall be marked with an identifying dot or with terminal numbers on a marking plate. If a dot is used, it shall consist of a contrasting color dot, raised or depressed molding, or punched indentation on or near the periphery of the switch section at terminal 1 or between terminals 1 and 2 and shall be visible when viewed from the rear end of the switch, unless otherwise specified (see 3.1)

3.32 Workmanship. Switches shall be processed in such a manner as to be uniform in quality and shall be free from cracked or displaced parts and other defects that will affect life, serviceability, or appearance. All molded or laminated parts shall be free of chips, blemishes, or flakes which are detrimental to the operating functions of the switch Gate marks shall not be considered a defect.

Source: https://assist.dla.mil -- Downloaded: 2016-11-13T00:49Z
Check the source to verify that this is the current version before use.

4 QUALITY ASSURANCE PROVISIONS

4.1 Responsibility for inspection. Unless otherwise specified in the contract or purchase order, the contractor is responsible for the performance of all inspection requirements (examinations and tests) as specified herein. Except as otherwise specified in the contract or purchase order, the contractor may use his own or any other facilities suitable for the performance of the inspection requirements specified herein, unless disapproved by the Government. The Government reserves the right to perform any of the inspections set forth in the specification where such inspections are deemed necessary to assure supplies and services conform to prescribed requirements.

4.1.1 Responsibility for compliance. All items shall meet all requirements of sections 3 and 5. The inspections set forth in this specification shall become a part of the contractor's overall inspection system or quality program. The absence of any inspection requirements in the specification shall not relieve the contractor of the responsibility of ensuring that all products or supplies submitted to the Government for acceptance comply with all requirements of the contract. Sampling inspection, as part of manufacturing operations, is an acceptable practice to ascertain conformance to requirements, however, this does not authorize submission of known defective material, either indicated or actual, nor does it commit the Government to accept defective material.

4.1.2 Test equipment and inspection facilities. Test and measuring equipment and inspection facilities of sufficient accuracy, quality, and quantity to permit performance of the required inspection shall be established and maintained by the contractor. The establishment and maintenance of a calibration system to insure the accuracy of the measuring and test equipment shall be in accordance with MIL-STD-45662.

4.2 Classification of inspections. The inspection requirements specified herein are classified as follows:

a. Materials inspection (see 4.3).

b. Qualification inspection (see 4.5).

c. Inspection of switches not covered by specification sheets (see 4.6).

d. Quality conformance inspection (see 4.7).

4.3 Materials inspection. Materials inspection shall consist of certification that the materials listed in table VIII, used in fabricating the switches, are in accordance with the applicable referenced specifications or requirements prior to such fabrication.

TABLE VIII Materials inspection

Material	Requirement paragraph	Applicable specification
Metal plating or treatment	3.4.1	QQ-P-416, ASTM B633, QQ-N-290, or MIL-A-8625
Insulation		
[illegible]	[illegible]	MIL [illegible]
Plastic	3.4.2.2	L-P-385 or FED-STD-406
Glass laminate	3.4.2.3	MIL-P-997, MIL-P-18177
Fungus resistance	3.4.2.4	MIL-STD-454
Solder	3.4.4	QQ-S-571
Flux	3.4.4	MIL-F-14256

Source: https://assist.dla.mil -- Downloaded: 2016-11-13T00:49Z
Check the source to verify that this is the current version before use.

4.4 Inspection conditions. Unless otherwise specified herein, all inspections shall be performed in accordance with the test conditions specified in the "GENERAL REQUIREMENTS" of MIL-STD-202.

4.4.1 Monitoring devices. The monitoring devices for switches having low level capabilities shall not load the contacts above 10 milliamperes resistive at 30 millivolts dc or peak ac maximum open circuit.

4.5 Qualification inspection. Qualification inspection shall be performed at a laboratory acceptable to the Government (see 6.3), on sample units produced with equipment and procedures normally used in production.

4.5.1 Sample size. The number of switches to be subjected to qualification inspection shall be as specified in the appendix to this specification.

4.5.2 Inspection order. The sample shall be subjected to the inspections specified in table IX, in the order shown. All sample units shall be subjected to the inspection of group I. The sample units shall then be divided as specified in table IX for groups II to V inclusive, and subjected to the inspection for their particular group. Two sample units that have passed group I tests shall be subjected to group VI tests, when applicable. Group VII inspection shall be conducted on separate switch sections. Four sample units that have passed group I tests shall be subjected to group VIII tests, when applicable.

4.5.3 Failures. One or more failures shall be cause for refusal to grant qualification approval.

4.5.4 Retention of qualification. To retain qualification, the contractor shall forward after initial qualification, at the conclusion of each succeeding 12-month period, a summary of the results of group A and group B tests performed during that period, indicating as a minimum, the number of lots which have passed and the number which failed. The contractor shall forward for each 36-month interval the complete results of group C tests which shall be performed during the last 12 months of that interval. If the test results indicate nonconformance with specification requirements, action shall be taken to remove the failing product from the qualified products list. Failure to submit the summaries and test data shall result in loss of qualification for that product. In addition to the periodic submission of inspection data, the contractor shall immediately notify the qualifying activity anytime during the applicable interval that the inspection data indicates failure of the product to meet the requirements of this specification. In the event that no production occurred during the 12-month reporting interval, a report shall be submitted certifying that the company still has the capabilities and facilities necessary to produce the item. If the item has not been produced for 36 months, the product must be requalified.

4.6 Inspection requirements for switches not covered by specification sheets. Inspection requirements for switches not covered by specification sheets shall be performed by the contractor, after award of contract and prior to production, at a laboratory certified by the Government (see 6.2.3).

4.6.1 Sample. Unless otherwise specified (see 6.2.3), the samples and test routine shall be as specified in 4.5.1, 4.5.2, and table IX. This approval is valid only on the contract under which it is granted unless extended by the Government to another contract. Samples subjected to this inspection shall not be delivered on a contract or order.

4.6.2 Failures. One or more failures shall be cause for refusal to grant inspection approval.

Source: https://assist.dla.mil -- Downloaded: 2016-11-13T00:49Z
Check the source to verify that this is the current version before use.

TABLE IX Qualification inspection

Examination or test	Requirement paragraph	Method paragraph
Group I (all sample units)		
Visual and mechanical examination 1/	3 1, 3 4 to 3 5.7 incl, 3.31 and 3.32	4 8 1
Circuit configuration 1/	3.6	4.8.2
Rotational torque 1/	3 7 1	4 8.3 to 4 8 3.1 2
Terminal strength	3.8	4 8 4
Contact resistance 1/ 2/	3.9	4.8.5
Positive shaft grounding (when specified, see 3 1) 1/	3 10	4.8.5.2
Strength of mounting bushing	3 7 3	4 8.3 3
Group II (4 sample units)		
Thermal shock	3 11	4 8 6
Strength of mounting bushing	3 7 3	4.8 3.3
Vibration	3 12	4 8 7
Shock	3 13	4 8 8
Sand and dust (when specified, see 3 1)	3 14	4 8 9
Rotational torque	3.7.1	4.8.3 to 4.8.3.1.1
Stop strength	3.7 2	4.8.3.2
Dielectric withstanding voltage	3 15	4 8 10
Coil current 3/	3 16	4 8 11
Insulation resistance	3.17	4 8 12
Contact resistance 2/	3 9	4.8 5
Positive shaft grounding (when specified, see 3 1)	3 10	4 8 5 2
Bushing and shaft seal (applicable to constructions -E, -F, -K, and -S switches)	3 18	4 8 13
Group III (4 sample units)		
Moisture resistance	3.19	4.8.14
Rotational torque	3.7.1	4.8.3 to 4.8.3.1.1
Dielectric withstanding voltage	3 15	4 8 10
Contact resistance 2/	3 9	4 8 5
Group IV (4 sample units)		
Corona (when specified, see 3 1)	3 20	4.8 15
Insulation resistance	3 17	4.8.12
Explosion (applicable only to constructions -E, -F, -J, and -K switches)	3 21	4 8 16
Salt spray (corrosion)	3.22	4.8.17
Contact resistance 2/	3.9	4.8.5
Positive shaft grounding (when specified, see 3 1)	3 10	4 8.5.2
Rotational torque	3.7.1	4.8.3 to 4 8.3.1.1

See footnotes at end of table

Source: https://assist.dla.mil -- Downloaded: 2016-11-13T00:49Z
Check the source to verify that this is the current version before use.

TABLE IX Qualification inspection - Continued.

Examination or test	Requirement paragraph	Method paragraph
Group V (4 sample units)		
Life (rotational) (manually-actuated switches)	3.23	4.8.18
Life (rotational) (electromechanically-actuated devices) 3/	3.23	4.8.18
At minimum voltage (see 3.1) 2 sample units		
At maximum voltage (see 3 1) 2 sample units		
Temperature rise (when specified, see 3.1) 4/	3.24	4.8.19
Dielectric withstanding voltage	3.15	4.8.10
Coil current 3/	3.16	4 8 11
Rotational torque	3.7.1	4.8.3 to 4.8.3.1.1
Insulation resistance	3.17	4.8.12
Contact resistance 2/	3.9	4 8.5
Positive shaft grounding (when specified, see 3.1)	3.10	4 8 5 2
Bushing and shaft seal (applicable only to constructions -D, -F, -K, and -S switches)	3.18	4.8.13
Group VI (2 sample units) (when applicable, see 3.1)		
Thermal EMF (when specified, see 3.1)	3.25	4.8.20
Capacitance (when specified, see 3.1)	3.26	4 8.21
Random vibration (when specified, see 3 1)	3.27	4.8.22
EMI/RFI shielding (when specified, see 3.1) 5/	3.29	4.8.24
Group VII (2 terminals, 3 sections minimum) (switch sections only)		
Solderability	3.28	4.8.23
Group VIII (4 sample units) (when applicable, see 3.1)		
Flux seal (when specified, see 3.1)	3.30	4.8.25, 4.8.25.1, and 4 8.25 2
Contact resistance 2/	3.9	4.8.5
Dielectric withstanding voltage	3.15	4.8.10
Insulation resistance	3 17	4.8.12

1/ Nondestructive tests, see 30.2.

2/ When low level circuit is specified, contact resistance shall be low level (see 4.8.5.1)

3/ When applicable.

4/ Two sample units, one set of contacts submitted to resistive loads.

5/ For EMI/RFI test, 4 sample units are required One each which has passed the test requirements of groups II, III, IV, and V

Source: https://assist.dla.mil -- Downloaded: 2016-11-13T00:49Z
Check the source to verify that this is the current version before use.

4 7 Quality conformance inspection

4.7.1 Inspection of product for delivery. Inspection of product for delivery shall consist of groups A and B inspections.

4.7.1 1 Inspection lot. An inspection lot shall consist of all switches of the same style, construction, temperature life characteristic, vibration grade, shock type, insulation, and altitude rating, produced under essentially the same conditions, and offered for inspection at one time. Similar switches meeting these requirements, but having different circuit configurations and number of switch sections, may be combined to form an inspection lot if the inspection is performed to the most severe conditions existing in the lot.

4.7.1 2 Group A inspection. Group A inspection shall consist of the examinations and tests specified in table X, in the order shown.

4.7 1 2 1 Sampling plan. Statistical sampling and inspection shall be in accordance with MIL-STD-105 for general inspection level II. The acceptable quality levels (AQL) shall be as specified in table X Major and minor defects shall be as defined in MIL-STD-105

4.7 1 2 2 Rejected lots. If an inspection lot is rejected, the contractor may rework it to correct the defects, or screen out the defective units and resubmit for reinspection. Resubmitted lots shall be inspected using tightened inspection Such lots shall be separate from new lots, and shall be clearly identified as reinspected lots.

TABLE X Group A inspection.

Examination or test	Requirement paragraph	Method paragraph	AQL (percent defective) Major	AQL (percent defective) Minor
Visual and mechanical examination:				
Design and construction	3 5 to 3 5.7 incl	4 8 1	1 0	4 0
Marking	3 31			
Workmanship	3.32			
Circuit configuration	3.6	4.8 2	1.0	---

4 7 1 3 Group B inspection. Group B inspection shall consist of the tests specified in table XI, in the order shown, and the sample shall be selected from inspection lots that have passed group A inspection

TABLE XI. Group B inspection.

Test	Requirement paragraph	Method paragraph
Torque (applicable only to manually-actuated switches)	3.7	4.8.3 to 4 8.3 1 1 and 4.8.3.2
Dielectric withstanding voltage	3.15	4.8.10
Coil current (when applicable)	3 16	4 8 11
Contact resistance 1/	3.9	4 8 5
Positive shaft grounding (when specified)	3 10	4 8.5.2

1/ When low level circuit is specified, contact resistance shall be low level (see 4 8 5 1) Terminal pull test is not applicable

Source: https://assist.dla.mil -- Downloaded: 2016-11-13T00:49Z
Check the source to verify that this is the current version before use.

4.7.1.3.1 Sampling plan. The sampling plan shall be in accordance with MIL-STD-105, for special inspection level S-4. The sample size shall be based on the inspection lot size from which the sample was selected for group A inspection. The AQL shall be 4.0 (percent defective).

4.7.1.3.2 Rejected lots. If an inspection lot is rejected, the contractor may rework it to correct the defects, or screen out the defective units and resubmit for reinspection. Resubmitted lots shall be inspected using tightened inspection. Such lots shall be separate from new lots, and shall be clearly identified as reinspected lots.

4.7.1.3.3 Disposition of sample units. Sample units which have passed all the group B inspection shall be delivered on a contract or order, if the lot is accepted.

4.7.2 Qualification verification inspection. Qualification verification inspection shall consist of group C inspection. Except where the results of these inspections show noncompliance with the applicable requirements (see 4.7.2.1.3), delivery of products which have passed groups A and B inspections shall not be delayed pending the results of these qualification verification inspections.

4.7.2.1 Group C inspection. Group C inspection shall consist of the tests specified in table XII, in the order shown, for each subgroup. Group C inspection shall be made on sample units produced with normal production processes and tools. The sample units shall be identical and a minimum of four switch sections shall be submitted, unless otherwise approved (see 6.3). One-half of the sample units in each group shall have the maximum number of sections or length which can be used without mounting brackets, and the other half of the sample units shall have the maximum number of sections or length which will require the use of mounting brackets. Each switch section shall have the contact arrangement of a single pole, nonshorting switch with the maximum number of contacts for the angle of throw for which qualification has been established. When fixed stops are used, they shall be set to allow rotation for the maximum number of contacts. A contractor's normal quality control tests (production tests, environmental tests, etc.) may be used to fulfill all or part of group C inspection. However, all of group C inspection shall be completed as specified.

4.7.2.1.1 Sampling plan. Sixteen, eighteen, twenty, or twenty-two sample units as applicable, plus three switch sections for each style, subdivided as specified for each subgroup in table XII shall be provided (see 4.7.2.1) 12 months after the date of notification of qualification, and after each subsequent interval as specified (see 4.5.4). When production of a particular style of switch has been suspended for 12 months, the qualifying activity shall be notified. For switches of each style produced during each inspection period, if more than one type (see 30.1.1) has been produced covering a number of performance levels, and if inspection is performed on sample units with the highest performance level produced during that period, inspection can be omitted for the types with lower performance levels. When inspection of switches not covered by specification sheets is performed (see 4.6), group C inspection is not required.

4.7.2.1.2 Disposition of sample units. Sample units which have been subjected to group C inspection shall not be delivered on a contract or order, but shall be kept on hand until the next inspection period for submittal to the qualifying activity if so requested.

Source: https://assist.dla.mil -- Downloaded: 2016-11-13T00:49Z
Check the source to verify that this is the current version before use.

TABLE XII Group C inspection

Test	Requirement paragraph	Method paragraph
Subgroup 1 (4 sample units)		
Thermal shock	3.11	4.8.6
Strength of mounting bushing	3.7.3	4.8.3.3
Vibration	3.12	4.8.7
Shock	3.13	4.8.8
Sand and dust (when specified, see 3.1)	3.14	4.8.9
Rotational torque	3.7.1	4.8.3 to 4.8.3.1.1
Stop strength	3.7.2	4.8.3.2
Terminal strength	3.8	4.8.4
Dielectric withstanding voltage	3.15	4.8.10
Coil current (when applicable, see 3.1)	3.16	4.8.11
Insulation resistance	3.17	4.8.12
Contact resistance 1/	3.9	4.8.5
Positive shaft grounding (when specified, see 3.1)	3.10	4.8.5.2
Bushing and shaft seal (applicable only to constructions -D, -F, -K, and -S switches)	3.18	4.8.13
Subgroup 2 (4 sample units)		
Life (rotational) 2/	3.23	4.8.18
Temperature rise (when specified, see 3.1)	3.24	4.8.19
Dielectric withstanding voltage	3.15	4.8.10
Coil current (when applicable, see 3.1)	3.16	4.8.11
Rotational torque	3.7.1	4.8.3 to 4.8.3.1.1
Insulation resistance	3.17	4.8.12
Contact resistance 1/	3.9	4.8.5
Positive shaft grounding (when specified, see 3.1)	3.10	4.8.5.2
Bushing and shaft seal (applicable only to constructions -D, -F, -K, and -S switches)	3.18	4.8.13
Subgroup 3 (4 sample units)		
Moisture resistance	3.19	4.8.14
Rotational torque	3.7.1	4.8.3 to 4.8.3.1.1
Dielectric withstanding voltage	3.15	4.8.10
Contact resistance 1/	3.9	4.8.5
Subgroup 4 (4 sample units)		
Corona (when specified, see 3.1)	3.20	4.8.15
Explosion (applicable only to constructions -E, -F, -J, and -K switches)	3.21	4.8.16
Salt spray (corrosion)	3.22	4.8.17
Contact resistance 1/	3.9	4.8.5
Positive shaft grounding (when specified, see 3.1)	3.10	4.8.5.2
Rotational torque	3.7.1	4.8.3 to 4.8.3.1.1

See footnotes at end of table.

Source: https://assist.dla.mil -- Downloaded: 2016-11-13T00:49Z
Check the source to verify that this is the current version before use.

TABLE XII Group C inspection - Continued

Test	Requirement paragraph	Method paragraph
Subgroup 5 (when applicable, see 3.1)(2 sample units)		
Thermal EMF (when specified, see 3.1)	3.25	4.8.20
Capacitance (when specified, see 3.1)	3.26	4.8.21
Random vibration (when specified, see 3.1)	3.27	4.8.22
EMI/RFI shielding (when specified, see 3.1) 3/	3.29	4.8.24
Subgroup 6 (2 terminals, 3 sections minimum) (switch sections only)		
Solderability	3.28	4.8.23
Subgroup 7 (4 sample units) (when applicable, see 3.1)		
Flux seal (when specified, see 3 1)	3.30	4 8.25
Contact resistance 1/	3.9	4.8.5
Dielectric withstanding voltage	3 15	4 8.10
Insulation resistance	3.17	4.8.12

1/ When low level circuit is specified, contact resistance shall be low level (see 4.8.5.1).

2/ For life rotational tests, an oscillogram is not required provided the power supply has been previously certified during the initial qualification or group C inspection, and the manufacturer has not made any changes in the dc power source since that certification.

3/ For EMI/RFI test, 4 samples are required. One each which has passed the test requirements of subgroups 1, 2, 3, and 4. The EMI/RFI test is not required provided the manufacturer has not made any changes in the design, construction, or material of the switch since the last EMI/RFI group C inspection or initial qualification (whichever came later) and the switch has met the shaft grounding requirements of qualification, group B, and group C inspections

4.7.2 1.3 Noncompliance. If a sample fails to pass group C inspection, the contractor shall take corrective action on the materials or processes, or both, as warranted, and on all units of product which can be corrected and which were manufactured under essentially the same conditions, with essentially the same materials, processes, etc., and which are considered subject to the same failure. Acceptance of the product shall be discontinued until corrective action, acceptable to the Government, has been taken. After the corrective action has been taken, group C inspection shall be repeated on additional sample units (all inspections, or the inspection which the original sample failed, at the option of the Government). Groups A and B inspections may be reinstituted, however, final acceptance shall be withheld until the group C reinspection shows that the corrective action was successful In the event of failure after reinspection, information concerning the failure and the corrective action taken shall be furnished to the cognizant inspection activity and the qualifying activity.

Source: https://assist.dla.mil -- Downloaded: 2016-11-13T00:49Z
Check the source to verify that this is the current version before use.

4 7 3 Inspection of packaging Inspection of packaging shall be in accordance with MIL-S-28786

4 8 Methods of examination and test

4 8 1 Visual and mechanical examination. Switches shall be examined to verify that the design, construction, physical dimensions, marking, and workmanship are in accordance with the applicable requirements (see 3.1, 3.4 to 3.5.7 inclusive, 3 31 and 3.32).

4 8.2 Circuit configuration (see 3.6). Switches shall be tested to determine conformance to the actual open and closed switch circuit conditions including shorting and nonshorting functions to the applicable diagram Visual examination or electrical means may be used on open construction type switches. Closed switches shall use suitable test circuits of an electrical design, however, visual examination may be used on the switch sections for in-line inspection in lieu of test circuits.

4.8 3 Torque (applicable only to manually-actuated switches) (see 3 7). Switches shall be mounted by their normal mounting means, unless otherwise specified (see 3 1)

4 8.3 1 Rotational (see 3 7.1).

4 8 3 1 1 Room temperature. Switches shall be exposed to a temperature of 25°C +10°C, -5°C For qualification inspection and group C inspection the values of torque required to rotate the switch through all positions in both directions shall be determined All readings shall be taken, and the average value of the torque shall be recorded For group B inspection, values need not be recorded, however, the torque shall be observed to determine whether it remains within the limits specified When group C inspection is to follow group B inspection, the torque values shall be recorded during group B inspection. All readings shall be observed to determine whether they are within the range as specified On concentric shaft switches, the rotational torque (see 3.1) shall be measured while rotating the inner shaft when a dummy knob (MS91528), with two no. 8-32 screws, 90 degrees apart, tightened to 15 pound-inches, is placed on the outer shaft

4.8 3.1.2 Minimum temperature. Switches shall be exposed to a temperature of -65°C ±2°C for a period of 4 hours. The values of torque required to rotate the switch through all positions in both directions shall be determined while the switch is maintained at -65°C ±2°C.

4 8.3 2 Stops (applicable only to switches with stops) (see 3.7.2). Unless otherwise specified (see 3.1), a torque of 25 pound-inches for switches with a maximum cross-section dimension of the switch section, excluding terminal projection, greater than 1.125 inches, and 15 pound-inches for switches with a maximum cross-section dimension of the switch section, excluding terminal projection of 1.125 inches or less, shall be gradually applied to the shaft against the stops in clockwise and counterclockwise directions After this test, switches shall be examined for broken, loose, deformed, and displaced parts, and slippage of moving parts.

4 8 3.3 Strength of mounting bushing (see 3.7.3) Bushing mounted switches shall be mounted on a metal panel by the normal mounting means with the specified hardware A torque of 5 pound-inches, unless otherwise specified (see 3.1), shall be applied to the mounting nut Switches shall then be examined for damage and loosening or twisting of the bushing relative to the switch front plate assembly Damage to the nonturn device shall be construed as a failure

Source: https://assist.dla.mil -- Downloaded: 2016-11-13T00:49Z
Check the source to verify that this is the current version before use.

4 8 4 Terminal strength (see 3.8). The following minimum number of terminals, where the circuit configuration permits, shall be tested

a. Three terminals per section, one section per switch.

b All terminals of the electromechanical-actuator device (when applicable)

Two of the terminals shall be adjacent at minimum spacing, and located on opposite sides of a through bolt, if used, where the circuit configuration permits

4.8.4 1 Pull. Unless otherwise specified (see 3 1), a force of 5 pounds shall be applied to the terminals at the normal location for attaching lead wires. The pull force shall be gradually applied to each terminal and maintained for 15 seconds in each of three mutually perpendicular directions as follows·

a In a direction parallel to the plane of the section and perpendicular to the longitudinal axis of the terminal.

b In a direction along the longitudinal axis of the terminal.

c In a direction perpendicular to the plane of the section for which there is a minimum support provided by the insulation

4.8 4.2 Bend (when applicable). Terminals bent permanently out of position as a result of the pull test (see 4.8.4.1), shall be tested in accordance with method 211 of MIL-STD-202 The following details shall apply

a. Test condition B.

b Number of bends· Two

c Location of applied bending force Normal location for attaching lead wires.

After this test, switches shall be examined for evidence of breakage of terminals and visible cracks in either the terminals or the insulating material (see 3.8.2)

4 8 5 Contact resistance (see 3 9) Switches shall be tested in accordance with method 307 of MIL-STD-202 The following details and exceptions shall apply

a Method of connection. To two different pairs of mating contacts on each electrical sector Where the switch has undergone a life (rotational) test (see 4 8 18.1 or 4.8.18.2, as applicable), the contacts shall have been subjected to the specified electrical test loads (see 3.1). At least one of the stator contacts on each section shall have been subjected to the terminal-strength pull test (see 4 8.4 1).

b. Test current 100 milliamperes

c Maximum open-circuit test voltage Two volts

d Number of activations prior to measurement Four, for mating contacts wiped across each other

e Number of test activations One for each mating contact under test.

f Number of measurements per activation One for each pair of mating contacts under test.

4 8 5 1 Contact resistance (low level circuit) (see 3 9.1) (when specified, see 3 1). Switches shall be tested as specified in 4.8.5, except that test current shall be 10 milliamperes and open-circuit test voltage shall be 30 millivolts dc maximum or peak ac.

Source: https://assist.dla.mil -- Downloaded: 2016-11-13T00:49Z
Check the source to verify that this is the current version before use.

4.8.5.2 Positive shaft grounding (see 3.10) (when specified, see 3.1). Resistance between the mounting bushing and the switch shaft shall be measured in accordance with contact resistance method 307 of MIL-STD-202. The following details and exceptions shall apply:

a. Method of connection. Between a suitable exterior point on the mounting bushing and the switch operating shaft. The shaft shall have no exterior force applied to it during measurement of resistance.

b. Test current: 100 milliamperes.

c. Open-circuit test voltage: 2 to 6 volts.

d. Number of measurements per activation. One in each shaft position.

4.8.6 Thermal shock (see 3.11). Switches shall be tested in accordance with method 107 of MIL-STD-202. The following details shall apply:

a. Test condition:

B: For switches with temperature life characteristic letters A, C, and E.

A: For switches with temperature life characteristic letters B, D, and F, except that the low temperature of the cycle shall be -65°C.

b. Measurements during test: At the end of the last thermal cycle of step one and while in the chamber, each contact of one section of the switch shall be checked for contact resistance through one rotational cycle of the switch. The contact resistance shall be checked as specified in 4.8.5, except contact actuations prior to measurement shall be one instead of four.

c. After removal from the chamber, the switch shall be examined for evidence of mechanical and electrical damage, loosening of rivets or other fastening devices.

4.8.7 Vibration (see 3.12). Switches shall be tested in accordance with the applicable test methods of MIL-STD-202, as follows:

a. For switches of vibration grade 1: Method 201.

b. For switches of vibration grade 2: Method 204, test condition A.

c. For switches of vibration grade 3: Method 204, test condition B.

d. The following details and exceptions to each applicable test method shall apply:

(1) Test and measurements prior to vibration: Not applicable.

(2) Method of mounting. Switches shall be mounted by using appropriate mounting hardware and secured in a normal manner on a rigid metal panel. The mounting fixture shall be free from resonance over the frequency range. Switches with mounting brackets shall be supported at the end of the last section.

Source: https://assist.dla.mil -- Downloaded: 2016-11-13T00:49Z
Check the source to verify that this is the current version before use.

(3) Direction of motion One of the directions of vibration shall be parallel to the longitudinal axis of the switch

(4) Electrical-load conditions The test circuit shall be in accordance with method 310 of MIL-STD-202 and shall consist of one pair of mated contacts in closed position on each electrical section (each pole group of contacts that performs a nonduplicating electrical function), series-connected, or individually monitored with each switch under test set at a different operating position

(5) Test and measurements during vibration: Switch-contact stability shall be continuously monitored during vibration by means of a test circuit in accordance with method 310 of MIL-STD-202. In the event of indication of failure, the vibration cycle shall be continued long enough to monitor contacts, switch by switch, and section by section, to determine if a switch is defective. If no opening can be found in a switch by switch or section by section monitoring, the switch may be considered to be a good unit

(6) Tests and measurements after vibration Not applicable

After the test, switches shall be examined for change in shaft position, and evidence of broken, deformed, displaced, or loose parts

4.8.8 Shock (see 3.13) Switches shall be tested in accordance with 4.8.8.1, and when required, in accordance with 4.8.8.2.

4.8.8.1 Method I (shock type M - medium impact). Switches shall be tested in accordance with method 213 of MIL-STD-202. The following details and exceptions shall apply

a Special mounting means Switches shall be mounted by using appropriate mounting hardware and secured in a normal manner Switches with mounting brackets shall be supported at the end of the last section

b Test condition. I (100 g, sawtooth).

c Electrical-load conditions As specified in 4.8.7d (4)

d. Measurements during shock. Switch-contact stability shall be continuously monitored during shock by means of a test circuit in accordance with method 310 of MIL-STD-202, and shall consist of one pair of mated contacts in closed position on each electrical sector (each pole group of contacts that performs a nonduplicating electrical function), series-connected, or individually monitored with each switch under test set at a different operating position In the event of indication of contact opening greater than that allowed, the test shall be modified by applying successive identical blows in the same plane to monitor contacts, switch by switch, or section by section, to determine if a switch is defective

e Measurements after shock. Not applicable.

After the test, switches shall be examined for change in shaft position, and evidence of broken, deformed, displaced, or loose parts

Source: https://assist.dla.mil -- Downloaded: 2016-11-13T00:49Z
Check the source to verify that this is the current version before use.

4 8 8 2 Method II (shock type H - high impact) Switches shall be tested in accordance with method 207 of MIL-STD 202. The following details and exceptions shall apply

a. Special mounting means As specified in 4.8.8.1a.

b Electrical-load conditions As specified in 4.8.7d.(4)

c. Measurements during shock. As specified in 4.8 8.1d. Switch-contact stability shall be monitored for each blow.

d Measurements after shock. Not applicable

After the test, switches shall be examined for change in shaft position, and evidence of broken, deformed, displaced, or loose parts

4.8 9 Sand and dust (see 3 14). Switches shall be tested in accordance with method 110 of MIL-STD-202 The following details shall apply

a The second 6-hour test at 63°C shall be performed immediately after reaching stabilization in step 2.

b Measurements During the last 2 hours of step 3, the switch shall make and break its rated resistive load for 500 cycles (see 6 7 20), at the lowest rated dc voltage

c Examination after test Switch shall be examined for evidence of electrical or mechanical damage.

4 8 10 Dielectric withstanding voltage (see 3 15) Switches shall be tested in accordance with 4 8 10 1, and when applicable (see 3 1), in accordance with 4 8 10 2

4 8 10 1 At atmospheric pressure. Switches shall be tested in accordance with method 301 of MIL-STD-202 The following details and exceptions shall apply

a. Magnitude of test voltage 1,000 volts root mean square (rms), unless otherwise specified (see 3.1).

b Nature of potential. AC

c Duration of application of test voltage For quality conformance inspection, at the option of the contractor, the test voltage may be applied for a period of five seconds

d. Points of application of test voltage for each switch section Between all even numbered contacts tied together and all odd numbered contacts tied together, and between each of these groups and the case, frame, and shaft

e Measurements during test Leakage current.

After the test, switches shall be examined for evidence of arcing, flashover, breakdown of insulation, and damage

4 8 10 2 At reduced barometric pressure. Switches designed for operating above 10,000 feet shall be tested as specified in 4 8 10 1 and in accordance with method 105 of MIL-STD-202. The following details and exceptions shall apply

a. Method of mounting By normal mounting means

b Test condition C or D, as applicable (see 1.2 2 8)

Source: https://assist.dla.mil -- Downloaded: 2016-11-13T00:49Z
Check the source to verify that this is the current version before use.

c Test during subjection to reduced pressure: The switch contacts specified in 4.8 10.1d shall be tested at 450 volts rms, unless otherwise specified (see 3.1). For electromechanically-actuated devices, duration of application, and points of application shall be as specified in 4.8.10.1.

After the test, switches shall be examined for evidence of arcing, flashover, breakdown of insulation, and damage

4 8.11 Coil current (applicable to electromechanically-actuated switches only) (see 3.16). With the unit stabilized at 85°C ±5°C, unless otherwise specified (see 3 1), the maximum specified operating voltage shall be applied to the coil terminals and the current flow determined within 10 seconds after application of the coil voltage.

4 8 12 Insulation resistance (see 3 17) Switches shall be tested in accordance with method 302 of MIL-STD-202 The following details shall apply

a Test condition A

b Points of measurement Between all terminals on each section tied together and frame or ground. Each switch section shall be measured separately

4.8.13 Bushing and shaft seal (applicable only to construction -D, -F, -K, and -S switches) (see 3.18). Before conducting this test, all gaskets which normally can be replaced in service without disassembly of the switch proper, shall be disassembled from the switch and then reassembled with the switch The switch shall then be mounted on a test enclosure (see figure 1), by its normal mounting means, with the shaft bushing submerged in water to depth of 6 ±2 inches and subjected to a gradually increasing pressure at the rate of 1 pound-per-square-inch gauge (lb/in^2g) every 2 minutes, until a pressure of 15 lb/in^2g is reached, and then maintained at that pressure for 30 minutes. During this period of maximum pressure, the switch shall be operated for 25 cycles of rotation, 360° clockwise and 360° counterclockwise while submerged A switch with stops shall be operated in both directions to the limits of the stops, however, the switch shall be operated for an additional number of such rotations necessary to equal a total angular rotation of 25 cycles of 360° in both directions During this test, the switch shall be observed for evidence of water leakage (see figure 1)

Source: https://assist.dla.mil -- Downloaded: 2016-11-13T00:49Z
Check the source to verify that this is the current version before use.

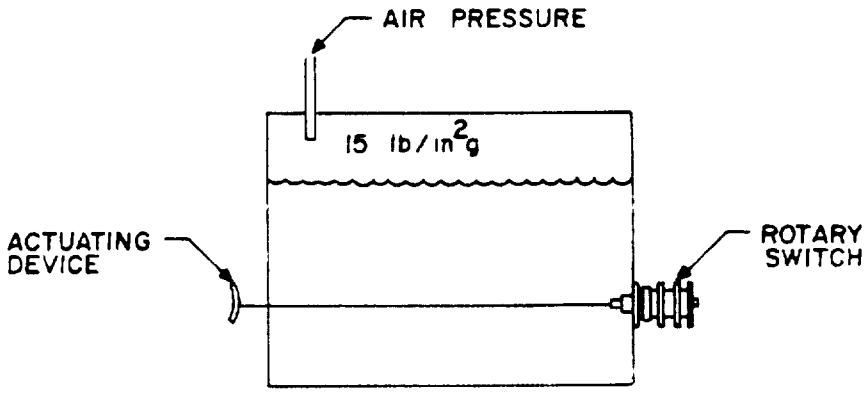

NOTE. Enclosed switches shall have an opening in the body to observe if leakage occurs around the sealed shaft and bushing

FIGURE 1. Seal test enclosure

4 8 14 Moisture resistance (see 3 19) Switches shall be tested in accordance with method 106 of MIL-STD-202 The following details and exceptions shall apply

a Mounting Switches shall be mounted on a corrosion-resistant metal panel with the shaft in a horizontal position

b Initial measurement Not applicable.

c. Polarization During steps 1 to 6 inclusive, a polarization voltage of 100 volts dc shall be applied between two terminals tied on opposite sides and adjacent to a through bolt, or a terminal adjacent to a grounded metal portion if no through bolting is used, and the metal panel. Polarization voltage shall also be applied to two other adjacent terminals elsewhere on the switch section One section of each switch shall be so tested The negative polarity shall be applied to the metal panel

d. Steps 7a and 7b are not applicable

e Load voltage Not applicable

f. Final measurements Immediately after the conclusion of the test and while the switches are still in the humidity chamber, insulation resistance shall be measured as specified in 4 8.12, unless otherwise specified (see 3.1) At the end of the drying period, insulation resistance shall again be measured as specified in 4 8 12, unless otherwise specified (see 3 1).

Source: https://assist.dla.mil -- Downloaded: 2016-11-13T00:49Z
Check the source to verify that this is the current version before use.

Within 24 hours after the test, switches shall be examined for evidence of corrosion, breaking, cracking, spalling, or loosening of terminals. A movement of the terminals within the confines of the terminal-anchoring device will be permitted provided continuity of electrical contact is not impaired. Mounting hardware shall be removable at the end of the test

4 8.15 Corona (when specified, see 3.1) (see 3.20). Switches shall be tested with a test potential of 1,200 volts, unless otherwise specified (see 3.1 and 6 2 3), or when specified (see 3.1), in accordance with method 105, test condition B, of MIL-STD-202 with a test potential of 600 volts. The switch assembly shall be isolated from the ground by a radio frequency inductor of at least 20 millihenrys for test power of 60 hertz (Hz). Voltages across the radio frequency inductor shall be coupled to a corona detector which shall be either an oscilloscope having a minimum sensitivity of 0.1 peak volt-per-inch up to at least 200 kilohertz (kHz) or a radio receiver having a minimum sensitivity of 25 microvolts in the 550 to 1,000 kHz band. Noise-limiting and narrow-band filtering circuits in the receiver shall be disabled. A radio-noise-free and corona-free power-frequency test voltage shall be applied to the switch terminals This test shall be conducted in a suitable radio-noise-free location

4 8 16 Explosion (applicable only to construction -E, -F, -J, and -K switches) (see 3.21). Switches shall be tested in accordance with method 109 of MIL-STD-202 The following detail shall apply. Electrical load. Switches shall be operated with the inductive load specified for atmospheric pressure (see 3.1).

4.8.17 Salt spray (corrosion) (see 3.22). Switches and their mounting hardware, assembled with their mounting means, shall be tested in accordance with method 101 of MIL-STD-202. The following details shall apply.

a Test condition B.

b Measurements after exposure. Not applicable.

After the test, switches shall be examined for evidence of excessive corrosion. Mounting hardware shall be removable at the end of the test.

4.8.18 Life (rotational) (see 3.23). Switches shall be tested in accordance with 4 8.18.1, and when applicable (see 3 1), in accordance with 4 8 18.2 and 4.8 18.3

4 8 18 1 At atmospheric pressure. Switches shall be tested in accordance with method 206 of MIL-STD-202. The following details and exceptions shall apply

a. Test potential and load. Each switch shall be energized by the specified test loads (see 3.1), with each load applied to approximately the same number of sections Inductive loads shall be in accordance with MIL-I-81023. The dc power source shall provide the rated or in rush current on resistive loads within 30 microseconds after closing the circuit with a bounceless contact device. Oscillograms shall be provided with the test report documenting this characteristic The first and last sections shall be energized with the resistive test load of the highest voltage rating. The specified load for each section shall be wired to the contacts which are subject to making or breaking the circuit during rotation of the switch shaft. All contacts of nonshorting decks shall be loaded, alternate contacts only for shorting decks shall be loaded Where there are insufficient switch sections to accommodate all test loads, the loads shall be apportioned, approximately equally, among the other switches being subjected to the life (rotational) test. For electromechanically-actuated devices the coil input voltage shall be the minimum rated voltage as specified (see 3.1).

Source: https://assist.dla.mil -- Downloaded: 2016-11-13T00:49Z
Check the source to verify that this is the current version before use.

b Cycling and cycle rate Manually-actuated switches shall be continuously cycled at the rate of approximately 10 cycles per minute Electromechanically-actuated devices shall be cycled at the rate specified (see 3.1). Each shaft of concentric shaft switches shall be rotated the total number of cycles prescribed (see 1 2 2 4) A cycle shall consist of a rotation of the shaft from one stop position to the other stop position (passing through detent positions, if any), and return to the original position For specimens not having stops, a cycle shall consist of a rotation of the shaft 360° and return, unless otherwise specified. Specimens with adjustable stops shall have the stops so placed as to permit maximum rotation. Specimens that are rotated by means other than a shaft shall meet the requirements of this paragraph by rotation 360° and return, unless otherwise specified, or from stop to stop

c. Test conditon· D, F, G, or H, as applicable (see table XIII)

TABLE XIII Atmospheric pressure test condition.

Test condition letter (method 206, MIL-STD-202)	Number of cycles	Temperature °C	Temperature life characteristic (1 2 2 4)
D	10,000	-65 and +125	A
F	25,000	-65 and +85	B
F	25,000	-65 and +125	C
G	50,000	-65 and +85	D
G	50,000	-65 and +125	E
H	100,000	-65 and +85	F

d Other test conditions Only the original lubricant applied during manufacture of the switch shall be used, and no lubricant shall be added after the tests have been started

e. Tests during rotations The life test will be conducted as follows

(1) Measure initial contact resistance.

(2) Soak at maximum temperature for 24 hours.

(3) Measure contact resistance

(4) Cycle units 1/2 life (rotational) One terminal of a suitable resistor shall be connected to the contacts of the front and rear sections, and the other terminal of the resistor shall be connected to a NE76 neon lamp or other suitable indicating device. At the beginning of the test and every 5,000 cycles of operation thereafter, the switches shall be monitored for 10 successive cycles of operation for extinguishing the neon lamp Rotation of the switch may be slowed to allow observation of extinguishing the neon lamp. At the option of the manufacturer, the testing may be interrupted for a period not to exceed 96 hours immediately following the monitoring after a group of 5,000 cycles of operation

Source: https://assist.dla.mil -- Downloaded: 2016-11-13T00:49Z
Check the source to verify that this is the current version before use.

(5) Soak for 24 hours at maximum temperature

(6) Measure contact resistance.

(7) Resume life tests to completion

(8) Measure final contact resistance

Coupling to rotary-actuation mechanism Loose (applicable only to manually-actuated switches)

After the test, switches shall be examined for broken, deformed, displaced, or loose parts.

4.8.18.2 Low level circuit life test. Low level circuit life test is the same as life (rotational) at atmospheric pressure as in 4.8.18.1 above with the following details and exceptions:

a Test potential and load Same as 4 8.18.1a, except contact loads each shall be 30 millivolts dc maximum or peak ac open-circuit voltage and 10 milliamperes maximum

b. Same as 4 8 18 1b.

c Same as 4 8 18.1c.

d Same as 4 8 18 1d

e Same as 4.8 18.1e, except contact loads shall be 30 millivolts dc maximum or peak ac open-circuit voltage and 10 milliamperes maximum Also, contact resistance measurements shall be made with 30 millivolts dc maximum or peak ac open circuit voltage and 10 milliamperes maximum

After the test, switches shall be examined for broken, deformed, displaced, or loose parts

4.8.18.3 At reduced barometric pressure. Switches designed for operation above 10,000 feet shall be tested as specified in 4.8.18.1 and in accordance with method 105 of MIL-STD-202, except that the temperature condition shall be room ambient The following details shall apply.

a Test condition C or D, as applicable (see 1.2 2 8)

b. Tests during subjection to reduced pressure Switches shall be operated at the applicable test loads (see 3.1).

c. Minimum input coil voltage to electromechanically-actuated devices shall be as specified (see 3 1).

After the test, switches shall be examined for broken, deformed, displaced, or loose parts.

NOTE Soak test is not a part of the reduced barometric pressure test

Source: https://assist.dla.mil -- Downloaded: 2016-11-13T00:49Z
Check the source to verify that this is the current version before use.

4.8.19 Temperature rise (when specified, see 3.1) (see 3.24). The temperature rise of any terminals shall be measured by means of a thermocouple. This thermocouple shall be made of no. 28 to 32 AWG wire. The thermocouple shall be soldered on the terminal within .0625 inch of its support Two hook-up wires, each having a nominal diameter of .032 inch, shall connect the terminal to a power supply. The terminal under test shall be loaded to the maximum rated current at any convenient voltage. This test shall be performed in still air The temperature of the terminal shall be determined when three successive readings taken at 5-minute intervals indicate that the temperature remains constant within ±1°C The room temperature shall be measured during this test at a distance of 2 to 4 feet from the terminal, and shall remain constant within ±1°C throughout the duration of the test.

4.8 20 Thermal electromotive force (EMF) (when specified, see 3.1) (see 3.25) Connectors to the switch should be made as follows: A no. 22 insulated copper wire shall be fastened mechanically to the collector terminal to give a good electrical connection and then soldered. An identical wire of the same length shall be similarly fastened to the selector terminal diametrically opposite the collector terminal. Solder used shall be Sn60 in accordance with QQ-S-571, and flux shall be 25 percent rosin, 75 percent alcohol, class A, type 1, grade WW conforming to LLL-R-626. The switch shall be positioned so as to close the circuit between the terminals to which the wires have been connected. The switch shall then be placed in a chamber which is maintained at the maximum rated switch temperature ±5°C. Equal portions of each wire (a minimum of 12 inches) shall be placed inside the chamber with the switch to equalize and minimize heat transfer through the wires. After a period of stabilization of 4 hours at the prescribed temperature, the voltage between the ends of the wires shall be monitored while the switch is removed from the heated chamber to room temperature which shall be maintained at 25°C ±5°C The equipment used for voltage measurement shall be maintained at 25°C ±5°C, having an accuracy of ±5 percent, and have precautions to minimize thermal EMF at connections. The leads shall be twisted after removing from the chamber.

4 8 21 Capacitance (when specified, see 3.1) (see 3.26). Switches shall be tested in accordance with method 305 of MIL-STD-202. The following details shall apply.

a Measurement frequency 1,000 kHz, unless otherwise specified

b. Measurement accuracy ±2 percent + 0 2 picofarad

c Point of measurement. Between any two adjacent terminals on one switch section, between one open contact and its common terminal and between a common terminal on one switch section and a common terminal on the nearest separate switch section.

4.8.22 Random vibration (when specified, see 3.1) (see 3.27). Switches shall be tested in accordance with method 214 of MIL-STD-202. The following details and exceptions shall apply

a Tests and measurements prior to vibration Not applicable

b. Method of mounting: Switches shall be mounted by using appropriate mounting hardware and secured in a normal manner. The mounting fixture shall be free from resonance for the entire bandwidth. Switches with mounting brackets shall be supported at the end of the last section.

c Electrical load conditions The test circuit shall be in accordance with method 310 of MIL-STD-202 and shall consist of one pair of mated contacts in closed position on each electrical section (each pole group of contacts that performs a nonduplicating electrical function), series-connected, or individually monitored with each switch under test set at a different operating position

Source: https://assist.dla.mil -- Downloaded: 2016-11-13T00:49Z
Check the source to verify that this is the current version before use.

d Test and measurement during vibration: Switch-contact stability shall be continuously monitored during vibration by means of a test circuit in accordance with method 310 of MIL-STD-202 In the event of indication of failure, the vibration cycle shall be continued long enough to monitor contacts, switch by switch, and section by section, to determine if a switch is defective If no opening can be found in a switch by switch or section by section monitoring, the switch may be considered to be a good unit.

e Tests and measurements after vibration. Not applicable

f. Test condition and letter. As specified (see 3.1).

After the test, switches shall be examined for change in shaft position, and evidence of broken, deformed, displaced, or loose parts.

4 8 23 Solderability (see 3.28). Switches shall be tested in accordance with method 208 of MIL-STD-202 The following details and exceptions shall apply

a. Number of terminations to be tested Six.

b Dipping device Need not be used

c. Examination of terminations: Method for evaluation of lugs and tabs shall apply.

This test may be performed on terminals on additional switch sections identical to those used in the switch being tested.

4 8 24 EMI/RFI shielding (when specified, see 3 1) (see 3 29) Switches shall be tested utilizing a test setup (or equivalent) as shown on figure 2 Measurements shall be made as follows.

a With the door open and the antennas in the "initial setup" position, establish a test level over the 200 MHz to 1 GHz range such that the received signal level is at least as many dB above the RF ambient level as that of the shielded enclosure attentuation.

b. Record the received signal level and the signal generator output level Repeat measurements at 100, 200, 400, 600, 800 and 1,000 MHz.

c. Move the antennas to the final test positions, close the door and with an RF-tight blank panel between the antennas, measure the integrity of the enclosure by setting the signal generator to the same output and record the received signal level for each frequency used in step b. The shielded enclosure attenuation is then calculated using the following equation

$$\text{Attenuation (dB)} = 20 \log \frac{E1}{E2}$$

Where E1 is the receiver reading in step b and E2 is the receiver reading in step c

d. Mount the test switch in the blank panel with the rear of the switch outside of the shielded enclosure (toward the signal generator antenna) The switch shall be mounted as it would be for normal installation using the mounting hardware supplied or recommended. Repeat the measurements of step c above and calculate the shielding attenuation of the switch using the new receiver readings

Source: https://assist.dla.mil -- Downloaded: 2016-11-13T00:49Z
Check the source to verify that this is the current version before use.

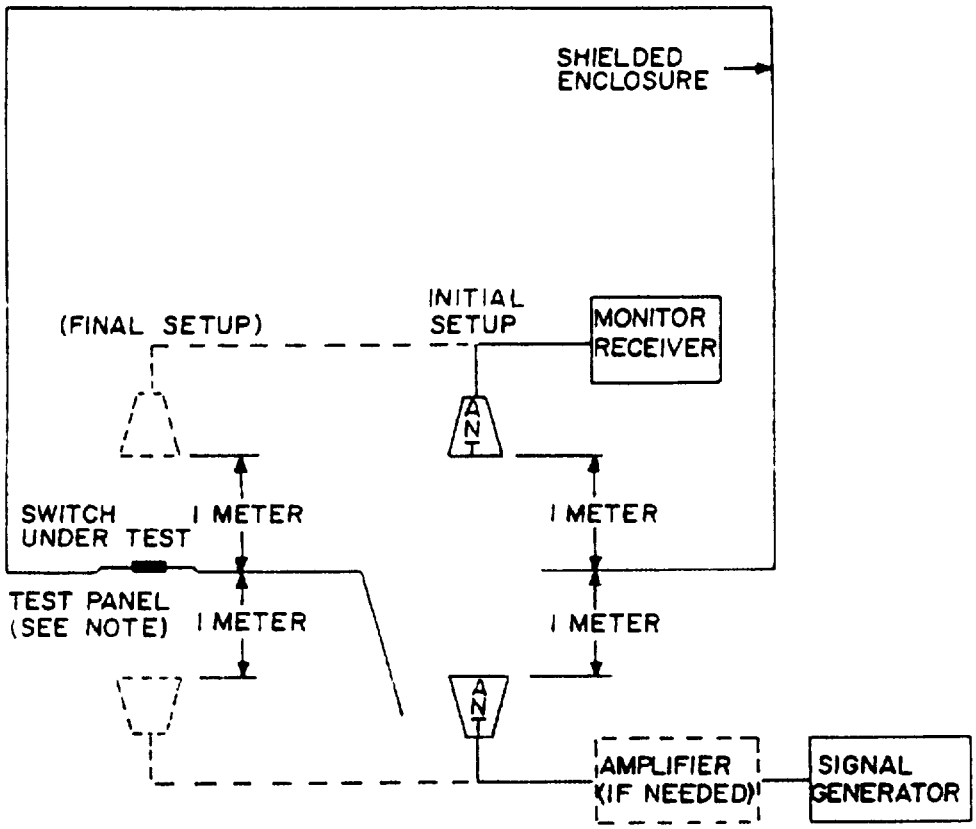

NOTE Test panel shall be located in the chamber wall at least 1 meter from any corner and at least 1 meter from floor and ceiling.

FIGURE 2 Block diagram of switch shielding efficiency test.

Source: https://assist.dla.mil -- Downloaded: 2016-11-13T00:49Z
Check the source to verify that this is the current version before use.

4 8 25 Flux seal (applicable to J and K construction, see 3.30) Switches shall be tested in accordance with 4 8 25 1 and when specified (see 3 1), 4 8 25.2

4 8.25 1 Level 1 flux seal Switch will be placed in a shallow pan, with the shaft pointing upward or in the case where the terminals radially exit the periphery of the switch body the terminals shall be facing down. Pour flux, type RMA in accordance with MIL-F-14256 at a temperature of 80°F ±5°F into the pan up to a depth of approximately 062 inch (1 57 mm) past the base of the terminals including all adjacent decks (when applicable) Soak the terminals for 5 minutes Remove the switch from the flux Dip the switch terminals into a solder pot to within 035 ±.015 inch (0 89 +0.38 mm) of the body of the switch for a period of 5 ±1 seconds. The solder temperature shall be maintained at 500°F ±5°F Where the terminals radially exit the periphery of the switch body, instead of using a solder pot, each individual terminal may be heated for 5 seconds ±1 second with a controlled tip temperature soldering iron, chisel tip, at 580°F ±10°F A small amount of solder shall be applied to each terminal during heating [illegible]

Cool for 1 minute Place the switch in a shallow pan filled with isopropyl alcohol and soak for 5 minutes The switch shall be placed in the pan with the same orientation and depth as previously described above for the application of flux.

Remove the switch from the alcohol and immediately place in an oven for drying at 175°F ±10°F for 2 hours minimum.

4 8 25 2 Level 2 flux seal Switches shall be tested in accordance with [illegible] following exceptions

a For type J construction, the flux and isoproply alcohol must completely cover the entire switch up to but not including the shaft bushing

b For type K construction, the flux and isoproply alcohol must completely cover the entire switch

5. PACKAGING

5 1 Packaging The requirements for packaging shall be in accordance with MIL-S-23786

6. NOTES

(This section contains information of a general or explanatory nature that may be helpful, but is not mandatory)

6.1 Intended use Switches covered by this specification are intended for use in low power ac and dc applications.

6 2 Acquisition requirements. Acquisition documents must specify the following

6 2 1 Switches covered by specification sheets and identified by military PIN's The acquisition document shall specify the following

a. Title, number, and date of this specification

b Title number, and date of the applicable specification sheet and PIN

Source: https://assist.dla.mil -- Downloaded: 2016-11-13T00:49Z
Check the source to verify that this is the current version before use.

6 2.2 Switch types covered by specification sheets but not identified by military PIN's Acquisition documents should specify the following:

a. Title, number, and date of this specification.

b Title, number, and date of the applicable specification sheet, and the complete type designation (see 1.2.2 and 3.1).

c Insulation (see 3.4 2).

d. Design and construction (see 3.5).

e. Number of hexagon nuts required (see 3.5.1.4), if other than specified.

f. Whether mounting hardware may be omitted (see 3 5 1 4), if other than specified.

g Whether stops are required and their positions (see 3.5.2)

h Operating shaft (see 3.5 5)

(1) Length and shape

(2) Special construction (e.g , double-flatted, with or without end screw, slotted, etc).

(3) Operating shaft dimensions, if other than specified

i. Circuit configuration (see 3 6) Drawing to be used for specifying the circuit configuration for each switch section should be in accordance with figure 3 or comparable figure or description

j. Terminals, if other than specified.

k Deck to deck spacing dimensions, if other than specified in the applicable specification sheet.

l Whether shield is required and location of (see figure 4)

m. Bushing thread length

n Terminal marking, when not required, shall be approved by the acquisition activity.

o. Optional assembly.

(1) Spring return action.

(2) Push to turn

(3) Pull to turn

p Terminal angle when other than specified.

q Whether knobs are required (if so, what size)

Source: https://assist.dla.mil -- Downloaded: 2016-11-13T00:49Z
Check the source to verify that this is the current version before use.

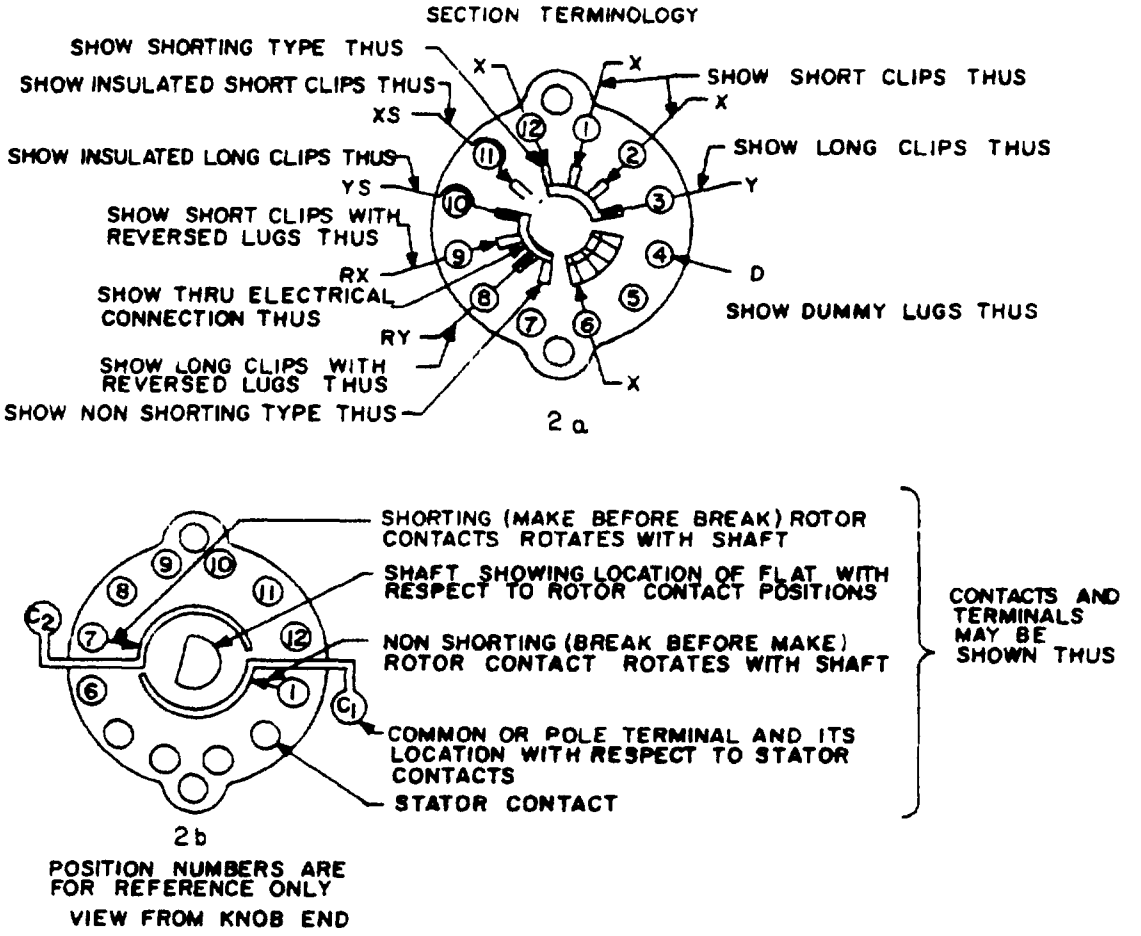

THESE VIEWS APPLICABLE TO EITHER OPEN OR ENCLOSED TYPE SWITCHES

NOTE Circuit configuration for rear deck is also viewed (transparent from knob end).

FIGURE 3. Circuit configuration details.

Source: https://assist.dla.mil -- Downloaded: 2016-11-13T00:49Z
Check the source to verify that this is the current version before use.

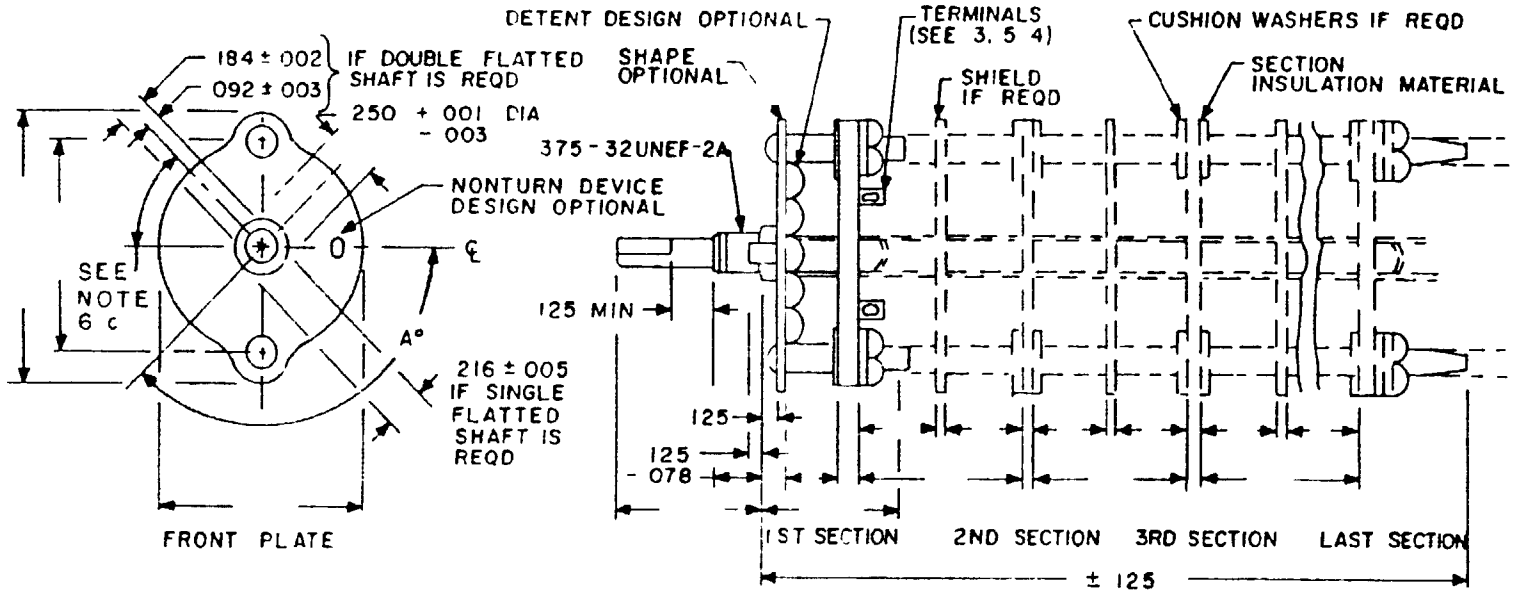

CONSTRUCTIONS N AND S (AS SHOWN) FOR CONSTRUCTIONS B, D, E, F, J and K (SEE NOTE 4)

NOTES

1. Dimensions are in inches
2. Metric equivalents are given for general information only
3. Unless otherwise specified, tolerances are ± 015 (± 38) and ±3° on angles.
4. Construction -B, -D, -E, -F, -J, and -K switches to be of the same dimensions as constuction -N and -S switches, except that a maximum bushing shoulder length of 250 inch (6.35 mm) is allowed
5. Shaft-flat angle A° is the angle between a line through the center of the shaft and center of the nonturn device and another line through the center of the shaft and perpendicular to the shaft flat
6. The following ordering details are to be specified
   a. Applicable dimensions and information for drawing leader notes
   b. Terminal tabs to be bent at . . angle from the plane of the section
   c. Shaft-flat angle ±5° representing the extreme counterclockwise position (as indicated on figure), or, position of stops, if applicable
   d. Detailed switch-section circuit configurations to be in accordance with ordering data Drawing to be used for detail circuit configuration on each section should be in accordance with figure 2 for applicable styles
   e. Number of switch section(s).
   f. The following test values, as required in the applicable acquisition document, are as specified

FIGURE 4 Ordering details for switches not covered by specification sheets

Source: https://assist.dla.mil -- Downloaded: 2016-11-13T00:49Z
Check the source to verify that this is the current version before use.

(1) Rotational torque (see 4.6.3.1)

Temperature	Minimum (lb-in)	Maximum (lb-in)
Room		
Minimum		

(2) Stop torque (see 4.6.3.2) . lb-in

(3) Terminal pull (see 4.8.4.1) lb

(4) Dielectric withstanding voltage (see 4.8.10)

Altitude	Test voltage (volts rms) general switch elements
At atmospheric pressure	
At reduced barometric pressure	

(5) Life (rotational) (see 4.8.18)

Environmental conditions	Inductive load (in accordance with MIL-I-81025)		Resistive load (ac or dc)	
	Milli-amperes	Volts dc	Milli-amperes	Volts
At atmospheric pressure				
At reduced barometric pressure				

Inches	mm	Inches	mm
.001	0.03	.092	2.34
.002	0.05	.125	3.18
.003	0.08	.184	4.67
.005	0.13	.216	5.49
.076	1.93	.250	6.35

Ordering details for switches not covered by specification sheets - Continued

Source: https://assist.dla.mil -- Downloaded: 2016-11-13T00:49Z
Check the source to verify that this is the current version before use.

6.2.3 Switch types not covered by specification sheets Acquisition documents should specify the following:

a. Title, number, and date of this specification.

b Details in accordance with figure 4 or comparable figure in complementary documents

c. Inspection for switches not covered by specification sheets

(1) The laboratory at which inspection is to be performed (see 4.6).

(2) Samples, submission of data, and test routing, if other than specified (see 4.6)

d Insulation (see 3.4.2).

e. Spacer, rotor, and stator materials (see 3.4.2.2).

f Design and construction (see 3 5)

g. Threaded parts, if other than in accordance with FED-STD-H28 (see 3.5.1)

h Through bolts, if other than specified (see 3.5.1.3).

i. Whether hexagon nuts are required (see 3 5 1 4)

j Whether mounting hardware may be omitted (see 3 5 1 4)

k Whether stops are required and their positions (see 3.5.2)

l Angle of bend for terminal tabs (see 3.5 4).

m. Operating shafts (see 3.5.5):

(1) Length and shape

(2) Special construction (e.g., double-flatted, with or without end screw, slotted, etc).

(3) Operating shaft dimensions.

(4) Shaft flat angle

(5) Bushing length.

n. Circuit configuration (see 3 6). Drawing to be used for specifying the circuit configuration for each switch section should be in accordance with figure 3 or comparable figure or description.

o Vibration and shock

(1) Allowable contact opening during vibration and shock (see 3.12 and 3.13).

(2) Electrical load conditions for vibration and shock test, if other than specified (see 4.8.7d and 4.8.8.1c).

(3) Whether shock test method II is required (see 4.8.8).

Source: https://assist.dla.mil -- Downloaded: 2016-11-13T00:49Z
Check the source to verify that this is the current version before use.

p. Moisture resistance, if other than specified (see 3.19).

q. Torque:

(1) Rotational torque limits (see 3.7.1 and figure 4)

(2) Stop torque, if other than specified (see 4.8.3.2).

(3) Bushing torque, if other than specified (see 4.8.3.3).

r. Life, rotational

Electromechanical devices

(1) Whether reduced barometric pressure tests are required (see 4.8.18) and altitude test condition letter (see 4.8.18.3a).

(2) Switch section electrical loading conditions (see 4.8.18.1a)

(3) Minimum input voltage of the coil (see 4.8.18.1a)

(4) Cycle rate (see 4.8.18.1b)

(5) Test condition letter (see 4.8.18.1c).

(6) Temperature conditions (see 4.8.18.1c).

(7) Electrical switch section loading condition at reduced barometric pressure (see 4.8.18.3b), and minimum input coil voltage rating (see 4.8.18.3c)

Manually operated switches

(1) Whether reduced barometric pressure tests are required (see 4.8.18), and altitude test condition letter (see 4.8.18.3a).

(2) Switch section electrical loading conditions (see 4.8.18.1a).

(3) Test condition letter (see 4.8.18.1c)

(4) Temperature conditions (see 4.8.18.1c).

(5) Electrical switch section loading condition at reduced barometric pressure (see 4.8.18.3b).

s. Corona, if applicable (see 3.20)

(1) Test potential, if other than specified (see 4.8.15)

(2) Whether reduced barometric pressure test is applicable (see 4.8.15)

t. Coil current (see 3.16).

u. Temperature rise, if applicable (see 3.24).

v. Thermal EMF, if applicable (see 3.25)

w. Capacitance, if applicable (see 3.26)

Source: https://assist.dla.mil -- Downloaded: 2016-11-13T00:49Z
Check the source to verify that this is the current version before use.

x. Switch terminal marking, if other than specified (see 3 31.2)

y. Terminal pull force, if other than specified (see 4.8.4 1)

z. Dielectric withstanding voltage

(1) Whether reduced barometric pressure tests are required (see 4.8.10)

(2) Test voltage, if other than specified (see 4 8.10 1a and 4 8 10 2c)

(3) Test condition letter (see 4 8 10 2b).

aa. Whether additional support is required (see 6 10)

bb. Electromechanical-actuation device (solenoid)

(1) Solenoid input voltage, minimum and maximum.

(2) Solenoid current, maximum allowable

(3) Solenoid duty cycle.

(a) Maximum "ON" time and minimum "OFF' time

(b) If duty cycle is continuous

(4) Flange or foot mount (solenoid switch)

(5) Self-interrupter switch (solenoid switch)

6) Homing deck and configuration (solenoid switch)

(7) Solenoid power source type.

(8) Auxiliary detent devices, when applicable

cc Terminal angle when other than specified.

dd. Random vibration, if applicable.

ee Knobs.

ff. Sand and dust (see 3 14)

6 3 Qualification. With respect to products requiring qualification, awards will be made only for products which are at the time set for opening of bids, qualified for inclusion in the applicable qualified products list whether or not such products have actually been so listed by that date. The attention of the contractors is called to this requirement, and manufacturers are urged to arrange to have the products that they propose to offer to the Federal Government tested for qualification in order that they may be eligible to be awarded contracts or orders for the products covered by this specification. The activity responsible for the qualified products list is the Electronic Support Division AFLC, 2750 ABW/ES, Gentile AF Station, Dayton, OH 45444-4500. Application for qualification tests shall be made in accordance with SD-6 "Provisions Govern ng Qualification' (Copies of specifications and SD-6 may be obtained upon application to Commanding Officer, Naval Publications and Forms Center, 5801 Tabor Avenue, Philadelphia, PA 19120.)

Source: https://assist.dla.mil -- Downloaded: 2016-11-13T00:49Z
Check the source to verify that this is the current version before use.

6.4 Part or Identifying Number (PIN) (See 1.2.1)

6.5 Subject term (key word) listing.

Angle of throw	Deck	Section
Bushing	Knob	Shaft
Concentric	Nonturn device	Shaft-flat
Concentric shaft	Pull to turn	Spacer
Corona	Push to turn	Spring return
Cycle	Rotor	Stator

6.6 Inspection requirements for switches not covered by specification sheets. Information pertaining to this inspection should be obtained from the acquisition activity for the specific contracts involved.

6.7 Definitions. For the purpose of this specification, the following definitions apply

6.7.1 Operating shaft. A part that drives the rotating members of the switch This shaft may be made of one or more pieces so arranged as to operate essentially as one piece.

6.7.2 Angle of throw. The number of degrees of rotation through which the shaft travels in moving from one detented position of the switch to the next consecutive detented position.

6.7.3 Bidirectional rotation Switch shaft may be operated either clockwise or counterclockwise.

6.7.4 Shorting type switch Also called make-before-break When switching from one position to the next, the second contact is closed before the first is opened.

6.7.5 Nonshorting type switch. Also called break-before-make. When switching from one position to the next, the first contact fully breaks before the second contact is made.

6.7.6 Section. That part of a switch complete in itself except for means of operating it, and consisting of a rotor and stator assembled as a unit with stationary and moving contacts.

6.7.7 Stator The stationary insulating portion of the switch section.

6.7.8 Rotor. The moving insulating portion of the switch section

6.7.9 Stator contacts or clips. The stationary conducting members mounted on the stators. Normally the terminal is an integral part of the clip and has a solder lug termination.

6.7.10 Rotor contact, rotor blade, or rotor wiper The moving conducting member, mounted on the rotor, which makes and breaks connections to the stator contacts

6.7.11 Common or collector. Also called "pole terminal". The stationary contact on the stator which is common to all other contacts in any one pole through the action of the rotating elements.

6.7.12 Long contacts or clips. Normally used to contact the inner level of the rotor contact and function as a common for any one pole

Source: https://assist.dla.mil -- Downloaded: 2016-11-13T00:49Z
Check the source to verify that this is the current version before use.

6.7 13 Short contacts or clips Normally used to contact the outer level of the rotor contact in a specified position of the switch and thereby complete an electrical circuit

6.7.14 Dummy lug. A tie point lug not associated with the switching.

6.7.15 Insulated contact or clips. Clips mounted back to back on opposite sides of the stator by the same fastener but electrically insulated from each other. This is usually accomplished by the use of special clips and an insulating washer

6 7.16 Straight contacts or clips. A contact or clip whose terminal lug extends on the plane of the stator.

6 7 17 Bent contacts or clips Contacts whose terminal lug is bent at an angle away from the stator.

6 7 18 Reverse bend contacts or clips. Contacts whose terminal lug is bent toward the opposite side of the stator from the side on which the clip is mounted

6 7.19 Totally closed construction. Both detent mechanism and switch sections enclosed (see 1 2.2 2)

6 7 20 Cycle of operation. For specimens not having stops, a cycle shall consist of a rotation of the shaft 360° and return, unless otherwise specified.

6 8 Airborne applications (see MIL-E-5400 "Electronic Equipment, Aircraft, General Specification For"). Only switches having vibration grade symbols 2 and 3 should be used for airborne applications

6 9 Submarine applications Switches using phenolic plastics should not be used for submarine applications.

6 10 Additional support Switches which have more than five sections, or which are more than 3 5 inches in length from the mounting surface, may use a rear support, if required to meet torque, vibration, and shock requirements (see 3 7, 3 12, and 3.13). Switch contractors should provide information to users of switches when additional support should be used.

6.11 Panel seal and knobs.

6 11 1 Panel seal boots Boots, when used to provide a panel seal, should be in accordance with MIL-B-5423, "Boots, Dust and Water Seal (For Toggle and Push-Button Switches and Rotary-Actuated Parts), General Specification For"

6 11 2 Knobs Knobs, when required should be in accordance with MIL-K-3926, "Knobs, Control (For Use with Electronic Communication and Allied Equipment)", or MIL-K-25049, "Knobs Control, Equipment, Aircraft"

6.12 Separate switch sections This specification primarily covers completely assembled switches The Government desires that complete switches be used whenever possible. In those instances where only the separate switch sections can be used, the switch sections should be in accordance with this specification and the applicable individual specification sheet Responsibility for the performance of complete switches assembled by the user from separate sections, rests with the user Users acquiring separate switch sections should therefore make certain that the complete switches, after assembly, can pass the tests in group V of table IX to assure quality commensurate with this specification.

Source: https://assist.dla.mil -- Downloaded: 2016-11-13T00:49Z
Check the source to verify that this is the current version before use.

6 13 Intermetallic contact The finishing of metallic areas to be placed in intimate contact by assembly presents a special problem, since intermetallic contact of dissimilar metals results in electrolytic couples which promote corrosion through galvanic action To provide the required corrosion protection, intermetallic couples are restricted to those permitted by MIL-STD-889

6 14 Low level applications. Switches tested or subjected to high level loads cannot be used for subsequent low level applications

6.15 Changes from previous issue. Marginal notations are not used in this revision to identify changes with respect to the previous issue due to the extensiveness of the changes.

Source: https://assist.dla.mil -- Downloaded: 2016-11-13T00:49Z
Check the source to verify that this is the current version before use.

APPENDIX

PROCEDURE FOR QUALIFICATION INSPECTION

10. SCOPE

10 1 Scope This appendix details the procedure for submission of samples, with related data, for qualification inspection of switches covered by this specification. The procedure for extending qualification of the required sample to other switches covered by this specification is also outlined herein. This appendix is a mandatory part of this specification. The information contained herein is intended for compliance

20. APPLICABLE DOCUMENTS.

This section is not applicable to this appendix.

30. SUBMISSION

30 1 Sample

30.1.1 Type submission All sample units of each type switch for which qualification is sought and identified by military Part or Identifying Numbers (PIN's) shall be of identical construction and shall be as follows

a Number of sample units 16, 18, 20, or 22, as applicable, plus 3 switch sections.

b Each sample shall have a minimum of 4 switch sections unless otherwise specified in the specification sheet

c Qualification approval shall be limited to the maximum number of sections or length which was submitted for qualification.

d Eight sample units shall have the maximum number of sections or length which can be used without additional support (see 6.10).

e. Eight sample units shall have the maximum number of sections or length which will require rear support.

f Each switch section shall be single pole, nonshorting contacts, with the maximum number of contacts possible for the angle of throw for which qualification is sought

g Stops shall be set to allow rotation for the maximum number of contacts.

For the purpose of qualification inspection, a switch type shall be defined as a switch covered by a specification sheet, having a particular temperature life characteristic, angle of throw, construction, vibration grade, shock type, insulation, altitude rating, and operating shaft and identified by a military PIN

Source: https://assist.dla.mil -- Downloaded: 2016-11-13T00:49Z
Check the source to verify that this is the current version before use.

30.1.2 Additional qualification At the time of submission of a single switch type to qualification inspection or at any time subsequent to the approval of any switch type for listing on the qualified products list, the manufacturer may request the option of testing additional sample units to obtain additional qualification as indicated below

Option	Test sequence
Shock, high impact (4 samples) 1/	Group I and group II using method II shock.
Barometric pressure (reduced) (4 samples) 1/	Group I and group V. The life and dielectric withstanding voltage tests to be run at reduced barometric pressure.
Vibration (4 samples) 1/	Group I and group II with the vibration test run at the vibration level for which qualification is sought.
Temperature life characteristic (4 samples) 1/	Group I and group V. The life and rotational torque shall be run at the temperature selected and number of cycles specified (see table II).
Low level circuit (2 samples)	Group I. All tests except that contact resistance shall be low level only Group V life (low level), dielectric withstanding voltage, insulation resistance and contact resistance (low level)
EMI/RFI shielding (4 samples)	4.8.24: One sample each that has passed the requirements of groups II, III, IV, and V.

30 2 Test data. When tests are to be performed at a Government laboratory, prior to submission, all sample units shall be subjected to all of the tests indicated as nondestructive in table IX Each submission shall be accompanied by the test data obtained from these tests. The performance of the destructive tests by the contractor on a duplicate set of sample units is encouraged, although not required All test data shall be submitted in duplicate. Additionally, one copy shall be submitted to each military custodian as listed for the particular style for which qualification is requested.

30 3 Certification of material. When submitting sample units for qualification, the contractor shall submit certification, in duplicate, that the materials and processes (if applicable), used in their components are in accordance with the applicable specified requirements

40 EXTENT OF QUALIFICATION

40 1 Type submission. Qualification will be restricted to the military Part or Identifying Number (PIN) type submitted.

1/ Two sample units shall be without additional support (see 30 1.1d), and two sample units may have rear support (see 30.1 1e).

Source: https://assist.dla.mil -- Downloaded: 2016-11-13T00:49Z
Check the source to verify that this is the current version before use.

40.2 Additional qualification. Qualification of a group of types will include qualification for all types in the group of a greater angle of throw, lower frequency vibration grades, and less stringent temperature life characteristics. Submission of additional switches to be subjected to method II shock test subsequent to units tested to method I shock test, will provide qualification for switches covered by both shock types. Submission of additional switches to be subjected to life (rotational) and dielectric withstanding voltage tests at reduced barometric pressure, will provide additional qualification for switches rated for use at reduced barometric pressure

a. Failure in the life (rotational) and dielectric withstanding voltage tests at reduced barometric pressure will not prevent qualification of identical switches rated for use at atmospheric pressure, if the switches tested at atmospheric pressure have qualified.

b Construction

K qualifies B, D, E, F, and J
J qualifies B and E
F qualifies B, D, and E
E qualifies B.
D qualifies B
S qualifies N.

c Angle of throw 7, 11, 13, 15, 18, 22, 26, 30, 36, 45, 60 72, and 90

Smallest angle of throw approved qualifies any larger angle of throw

d Temperature life characteristic

E qualifies D, C, B, and A
F qualifies D and B
D qualifies B
C qualifies A and B.

e. Vibration.

Grade 3 qualifies grades 2 and 1.
Grade 2 qualifies grade 1.

f Method II shock does not qualify method I shock, nor does method I shock qualify the method II shock

Source: https://assist.dla.mil -- Downloaded: 2016-11-13T00:49Z
Check the source to verify that this is the current version before use.

CONCLUDING MATERIAL

Custodians
Army - ER
Navy - EC
Air Force - 85

Review activities
Army - MI
Navy - AS, OS
Air Force - 17, 99
DLA - ES

User activities
Army - AR, AT, AV
Navy - CG, MC
Air Force - 19

Preparing activity
Air Force - 85

Agent
DLA - ES

(Project 5930-1391)

Source: https://assist.dla.mil -- Downloaded: 2016-11-13T00:49Z
Check the source to verify that this is the current version before use.

STANDARDIZATION DOCUMENT IMPROVEMENT PROPOSAL

INSTRUCTIONS

1. The preparing activity must complete blocks 1, 2, 3, and 8. In block 1, both the document number and revision letter should be given.
2. The submitter of this form must complete blocks 4, 5, 6, and 7.
3. The preparing activity must provide a reply within 30 days from receipt of the form.

NOTE: This form may not be used to request copies of documents, nor to request waivers, or clarification of requirements on current contracts. Comments submitted on this form do not constitute or imply authorization to waive any portion of the referenced document(s) or to amend contractual requirements.

I RECOMMEND A CHANGE:

1. DOCUMENT NUMBER: MIL-S-3786F
2. DOCUMENT DATE (YYMMDD): 90-06-29

3. DOCUMENT TITLE: SWITCHES, ROTARY (CIRCUIT SELECTOR, LOW-CURRENT CAPACITY), GENERAL SPECIFICATION FOR

4. NATURE OF CHANGE (Identify paragraph number and include proposed rewrite, if possible. Attach extra sheets as needed.)

5. REASON FOR RECOMMENDATION

6. SUBMITTER

a. NAME (Last, First, Middle Initial)

b. ORGANIZATION

c. ADDRESS (Include Zip Code)

d. TELEPHONE (Include Area Code)
(1) Commercial
(2) AUTOVON (If applicable)

7. DATE SUBMITTED (YYMMDD)

8. PREPARING ACTIVITY

a. NAME: 2750ABW/ES
Gentile AFS, OH 45444-5400

b. TELEPHONE (Include Area Code)
(1) Commercial: 513- 296-6887
(2) AUTOVON: AV 986-6887

c. ADDRESS (Include Zip Code)

IF YOU DO NOT RECEIVE A REPLY WITHIN 45 DAYS, CONTACT:
Defense Quality and Standardization Office
5203 Leesburg Pike, Suite 1403, Falls Church, VA 22041-3466
Telephone (703) 756-2340 AUTOVON 289-2340

DD Form 1426, OCT 89 — Previous editions are obsolete. 98/290

Source: https://assist.dla.mil -- Downloaded: 2016-11-13100:49Z
Check the source to verify that this is the current version before use.