NOTE: MIL-STD-1791 (USAF) has been redesignated as a handbook, and is to be used for guidance purposes only. This document is no longer to be cited as a requirement. For administrative expediency, the only physical change from MIL-STD-1791 (USAF) is this cover page. However, this document is no longer to be cited as a requirement. If cited as a requirement, contractors may disregard the requirements of this document and interpret its contents only as guidance.

NOT MEASUREMENT SENSITIVE

MIL-HDBK-1791 (USAF)
14 February 1997
SUPERSEDING
MIL-STD-1791 (USAF)
NOTICE 3
14 February 1997

DEPARTMENT OF DEFENSE HANDBOOK

DESIGNING FOR INTERNAL AERIAL DELIVERY IN FIXED WING AIRCRAFT

THIS HANDBOOK IS FOR GUIDANCE ONLY
DO NOT CITE THIS DOCUMENT AS A REQUIREMENT

AMSC N/A FSC 1510

DISTRIBUTION STATEMENT A. Approved for public release; distribution is unlimited.

Source: https://assist.dla.mil -- Downloaded: 2016-12-11T01:38Z
Check the source to verify that this is the current version before use.

DEPARTMENT OF DEFENSE

Washington DC 20350

DESIGNING FOR INTERNAL AERIAL DELIVERY IN FIXED WING AIRCRAFT
MIL-STD-1791 (USAF)

1. This Military Standard is approved for use within the Department of the Air Force and is available for use by all Departments and Agencies of the Department of Defense.

2. Beneficial comments (recommendations, additions, deletions) and any pertinent data which may be of use in improving this document should be addressed to: ASD/ENES, Wright-Patterson AFB OH 45433-6503 by using the self-addressed Standardization Document Improvement Proposal (DD Form 1426) appearing at the end of this document or by letter.

Source: https://assist.dla.mil -- Downloaded: 2016-12-11T01:38Z
Check the source to verify that this is the current version before use.

FOREWORD

This standard establishes general design and performance requirements for military equipment to be air transported in or airdropped from the cargo compartments of fixed wing aircraft. The standard covers the three USAF prime mission cargo aircraft (C-130, C-141B, and C-5) as well as the cargo aircraft in the long range international segment of the Civil Reserve Air Fleet (B-747), DC-10, B-707, and DC-8). The structural and dimensional criteria for other cargo aircraft are documented in specific manuals for each aircraft.

The format of this document incorporates the basic standard containing general and detail requirements with associated verification criteria, and administrative information. Two appendices supplement the basic standard. Appendix A, User Handbook for MIL-STD-1791, contains the rationale, guidance, and lessons learned for both the detail requirements and verification criteria. Appendix B, Air Transportability Design Information, consists of multiple sections. The first section presents general information on the military aircraft features and limits, restraint criteria and applications, and unit load device design. The next three sections present C-130, C-141B, and C-5 structural and dimensional criteria and cargo item considerations. The last section covers load planning for the Civil Reserve Air Fleet (CRAF) (TO-1-C-XXX-9). For other military aircraft, refer to that aircraft's dash 9 loading manual. For other commercial aircraft, refer to the specific aircraft weight and balance manual.

A particularly useful feature of Appendix A is a matrix showing design requirements appropriate to various types of cargo item configurations. It is intended as a guide for the user in determining which criteria should be considered for a particular design situation. User comments are solicited in an effort to improve this feature.

Source: https://assist.dla.mil -- Downloaded: 2016-12-11T01:38Z
Check the source to verify that this is the current version before use.

1. SCOPE

1.1 General. This standard covers general design and performance requirements of military equipment for internal air transport in military prime mission cargo aircraft and the long range international segment of the Civil Reserve Air Fleet (CRAF). This standard also contains general design and performance requirements for military equipment to be airdropped from Air Force cargo aircraft. The complete air transportability and airdrop requirements for an item of equipment not specified herein shall be specified in the individual equipment specification.

1.2 Applicability. The requirements and tests contained in this standard apply to the internal air transportability and airdrop aspects of all items intended for aerial delivery in CRAF or USAF aircraft. They represent the minimum acceptable transportability and airdrop features. When it is known that the equipment will require features that are more restrictive than those stated herein, the more stringent features will be specified in the individual equipment specification.

1.3 Deviations

1.3.1 Design improvements. Any projected design that will improve performance, safety, or reliability or reduce life cycle and end item cost through deviations from this standard, or where the requirements of this standard result in a compromise of the item for the sake of air transportability or airdrop, shall be brought to the attention of the procuring activity for consideration.

2. REFERENCED DOCUMENTS

2.1 Government documents

2.1.1 Specifications, standards, and handbooks. Unless otherwise specified, the following specifications, standards, and handbooks of the issue listed in that issue of the Department of Defense Index of Specifications and Standards (DODISS) specified in the solicitation form a part of this standard to the extent specified herein.

SPECIFICATIONS

Military

MIL-T-25959	Tie Down, Cargo, Aircraft
MIL-T-27260	Tie Down, Cargo, Aircraft, CGU-1/B
MIL-P-27443	Pallets, Cargo, Aircraft, Type HCU-6/E, HCU-12/E, and HCU-10/C
MIL-N-27444	Net, Cargo Tiedown, Pallets HCU-7/E, HCU-15/C, HCU-11/C, and HCU-16/C

Source: https://assist.dla.mil -- Downloaded: 2016-12-11T01:38Z
Check the source to verify that this is the current version before use.

STANDARDS

Military

MIL-STD-129	Marking for Shipment and Storage
MIL-STD-209	Slinging and Tiedown Provisions for Lifting and Tying Down Military Equipment
MIL-STD-331	Fuze and Fuze Components, Environmental and Performance Tests for
MIL-STD-669	Loading Environment and Related Requirements for Platform Rigged Airdrop Material
MIL-STD-810	Environmental Test Methods and Engineering Guidelines
MIL-STD-814	Requirements for Tiedown, Suspension and Extraction Provisions on Military Materiel for Airdrop

2.1.2 **Other Government documents, drawings, and publications.** The following other Government documents, drawings, and publications form a part of this standard to the extent specified herein.

Air Force Regulations

AFR 76-2	Airlift Planning Factors

Joint Regulations

AFR 71-4/ TM38-250/ NAVSUP PUB 505/ MCO P4030.19/ DLAM 4145.3	Preparation of Hazardous Materials for Military Air Shipment
AR 70-44/ OPNAVINST 4600.22B/ AFR 80-18/ MCO 4610.14C/ DLAR 4500.25	DOD Engineering for Transportability
AFLCR 800-29/ AFSCR 800-29/ DARCOM-R 700-103/ NAVMATINST 4030.11A/ DLAR 4145.37	Policies and Procedures for Hazardous Materials Package Certification
AFR 76-38/ AR 59-8	Department of Defense (DOD) Common User Airlift Transportation

Source: https://assist.dla.mil -- Downloaded: 2016-12-11T01:38Z
Check the source to verify that this is the current version before use.

Joint Regulations

AFR 71-4/ TM38-250/ NAVSUP PUB 505/ MCO P4030.19/ DLAM 4145.3	Preparation of Hazardous Materials for Military Air Shipment
AR 70-44/ OPNAVINST 4600.22B/ AFR 80-18/ MCO 4610.14C/ DLAR 4500.25	DOD Engineering for Transportability

AFLCR 800-29/
Policies and Procedures for Hazardous Materials
AFSCR 800-29/
Package Certification
DARCOM-R 700-103/
NAVMATINST 4030.11A/
DLAR 4145.37

Code of Federal Regulations

Title 49
Parts 100-199 Code of Federal Regulations

Field Manuals/Technical Orders

FM-10-501/
TO 13C7-1-11 Airdrop of Supplies and Equipment: Rigging Containers

International Standardization Agreements

ASCC 44/21	Air Standard Criteria for the Design of Equipment Required to be Air Transported or Airdropped from Fixed Wing and Rotary Wing Transport Aircraft
NATO STANAG 3548TN	Tiedown Fittings on Air Transported and Airdropped Equipment and Cargo Internally by Fixed Wing Aircraft

(Copies of specifications, standards, handbooks, drawings, publications, and other Government documents required by contractors in connection with specific acquisition functions should be obtained from the contracting activity or as directed by the contracting activity.)

Source: https://assist.dla.mil -- Downloaded: 2016-12-11T01:38Z
Check the source to verify that this is the current version before use.

Federal Aviation Regulation

FAR, Part 25	Airworthiness Standards: Transport Category Airplanes

Code of Federal Regulations

Title 49, Parts 100-199	Code of Federal Regulations

Field Manuals/Technical Orders

FM-10-501/ TO 13C7-1-11	Airdrop of Supplies and Equipment: Rigging Containers

(Copies of specifications, standards, handbooks, drawings, and publications required by contractors in connection with specific acquisition functions should be obtained from the contracting activity or as directed by the contracting officer.)

2.2 **Order of precedence.** In the event of a conflict between the text of this standard and the references cited herein, the text of this standard shall take precedence.

3. DEFINITIONS

3.1 **Aerial delivery.** The act or process of delivering cargo or personnel by air transport or airdrop.

3.2 **Air cargo.** Any goods or material shipped or consigned by air.

3.3 **Airdrop.** Delivery of personnel or cargo from aircraft in flight. Five current methods of airdrop are free drop, low velocity drop, high velocity drop, staged drop, and low altitude parachute extraction.

3.4 **Airdrop item.** The equipment in its reduced configuration for airdrop, including external or internal loads such as fuel, ammunition, field gear, or rations.

3.5 **Airdrop weight.** The weight of the airdrop item.

3.6 **Air transportability test loading agency (ATTLA).** An agency of the US Air Force established to serve as the focal point for all air transportability tests and clearance of items of equipment for movement on USAF cargo aircraft and the long-range international segment of the Civil Reserve Air Fleet (CRAF).

3.7 **Air transport.** Delivery of personnel or cargo from point to point in which the cargo is delivered by airlanding.

3.8 **Air transportable.** Denotes equipment and cargo items which can be carried in an aircraft with not more than minor dismantling and reassembling within the capabilities of user units.

Source: https://assist.dla.mil -- Downloaded: 2016-12-11T01:38Z
Check the source to verify that this is the current version before use.

3.9 **Air transportability problem item.** An item of equipment in its proposed shipping configuration which, because of its size, weight, fragile or hazardous characteristics, or lack of adequate means for handling or tie-down, or requirement for special support equipment, may be denied transport aboard US Air Force prime mission cargo aircraft or the long-range international segment of the Civil Reserve Air Fleet (CRAF). An item will be considered as a potential problem item when its design requirement includes transportability in such aircraft and the item exceeds any one of the air mode or general conditions imposed by Paragraph A-9, Joint Regulation AR 70-44/ OPNAVINST 4600.22B/AFR80-18/MCO 4610.14C/DLAR 4500.25.

3.10 **ASD.** The Aeronautical Systems Division (ASD) is one of the product divisions under Air Force Systems Command (AFSC). The prime mission of ASD is the initial development and acquisition of new weapons systems and supporting equipment.

3.11 **Bulk cargo.** General cargo capable of being stacked on the floor of an aircraft.

3.12 **Buttock line (butt line, BL).** The distance from the centerline of the aircraft measured in inches in an outboard direction. RBL or LBL is used to designate right and left hand side of aircraft when facing forward from aft end of the airplane.

3.13 **Civil Reserve Air Fleet (CRAF).** A group of commercial transport aircraft with crews, which is allocated in time of emergency, under the emergency war plan, for exclusive use by DOD to augment the MAC fleet.

3.14 **Clearance limits.** The dimensions beyond which the size of, or projection on, a shipment may not extend in order to clear obstructions which restrict the handling or transportation of such shipment. Such limits may be actual or prescribed by law or regulation.

3.15 **Deployment.** The movement of strategic or tactical aircraft and units to an overseas location. This includes emergency movements, scheduled rotations of aircraft from CONUS bases to overseas bases, and related exercises.

3.16 **Door bundles.** An A-7A or A-21 container load which is airdropped by pushing it out of the paratroop door.

3.17 **Extraction provision.** An integral fitting on the item used for attaching the extraction system.

3.18 **Extraction ratio.** The ratio of the average extraction force to the gross rigged weight.

3.19 **Extraction system.** A system used to withdraw the item from an aircraft in flight.

Source: https://assist.dla.mil -- Downloaded: 2016-12-11T01:38Z
Check the source to verify that this is the current version before use.

3.20 **463L.** The common designation for a family of air cargo handling equipment. The 463L system consists of separate, but interdependent, equipment families, including terminals, on-board aircraft cargo handling systems, ground handling equipment and pallets and nets. The pallets with nets are used as a unitization module and are loaded into the aircraft on roller conveyors. A 463L equipped aircraft has roller conveyor assemblies and restraint rails with integral locks. A pallet/net assembly is secured into the aircraft by these locks.

3.21 **Field manual (FM).** The Army version of the Air Force technical order.

3.22 **Fuselage station (FUS STA).** Any longitudinal point in the aircraft designated in inches from a fixed reference point.

3.23 **G-force.** The resultant force exerted on an object by a gravity or by reaction to acceleration or deceleration. G is an acceleration ratio (a/g) of the item's acceleration (a) to the acceleration of gravity (g). When multiplied by an item's weight the ratio gives the force experienced by the item due to acceleration/deceleration. Also called G.

3.24 **Gross rigged weight.** The airdrop weight plus the weight of all airdrop rigging.

a. Low Velocity Airdrop: Gross rigged weight is approximately equal to 1200 + 1.125 x airdrop weight (lb).

b. LAPES: Gross rigged weight equals 2350 + 1.04 x airdrop weight (lb).

3.25 **Hazardous material.** A substance or materiel which has been determined and designated by the Secretary of Transportation and/or the services to be capable of posing an unreasonable risk to health, safety, and property when transported. Included are explosives, articles such as flammable liquids and solids, and other dangerous oxidizing materials, corrosive materials, compressed gases, poisons and irritating materials, etiologic agents and radioactive materials. (See provisions of Title 49 of the Code of Federal Regulations and AFR 71-4/TM 38-250/NAVSUP PUB 505/MCO P4030.19/DLAM 4145.3 for a complete listing of hazardous materials and certification requirements.)

3.26 **High velocity airdrop.** A method of airdrop in which the stabilized rate of descent is between 35 ft/sec and free drop velocity.

3.27 **Item extraction.** The extraction system is attached directly to the airdrop item. Extraction provisions are required.

3.28 **K-loader.** Operational term for cargo loading vehicles used by the DOD. These vehicles are part of the 463L materials handling system. The number designation in front of the K (kips) represents the usual approximate working capacity of the vehicle, in 1000-lb units. For example, a 25K-loader would have a capacity of 25,000 lb.

3.29 **Limit load.** The maximum working force to which the provision will be subjected under normal conditions.

Source: https://assist.dla.mil -- Downloaded: 2016-12-11T01:38Z
Check the source to verify that this is the current version before use.

3.30 **Low altitude parachute extraction system (LAPES).** A method of airdrop using parachute extraction from an aircraft flying no higher than 10 feet above the ground.

3.31 **Low velocity airdrop.** A method of airdrop in which the stabilized rate of descent does not exceed 35 ft/sec.

3.32 **Low velocity platform airdrop.** A type of low velocity airdrop in which an airdrop platform is used.

3.33 **Military Airlift Command (MAC).** A unified command of the US Air Force which operates a fleet of transport aircraft for both strategic and tactical support of DOD. In addition to military aircraft, MAC operates civilian aircraft under charter, contract, or lease.

3.34 **Outsized cargo.** Outsized cargo exceeds the capabilities of C-141B aircraft and requires use of C-5.

3.35 **Overhang.** The distance, measured along the road surface between the centerline of the extreme end axles and the end of a vehicle. In airdrop, the distance, measured horizontally, from the end of the airdrop platform to the end of the airdrop item when the item is longer than the platform. In both cases there can be a front and rear overhang.

3.36 **Oversize cargo.** Oversize cargo is a single item that exceeds the usable dimensions of a 463L pallet (104 in. length x 84 in. width x 96 in. height for military aircraft).

3.37 **Pallet.** A simple unit load device used for consolidation of cargoes for efficient handling. Within the Air Force, pallets fall into two basic groups:

a. Warehouse pallet. Generally a wood pallet 40 x 48 x 6 in., weighing 75 to 100 lb, with a load capacity of 2000 lb.

b. 463L pallet. The pallet used within the military air cargo handling system and is also compatible with commercial air cargo systems.

3.38 **Platform.** A unit load device similar to the pallet; however it is specifically designed for airdrop. It is 108 in. wide with lengths generally ranging from 8 to 32 ft, in 4-ft increments.

3.39 **Platform extraction.** The extraction system is attached to the platform. No extraction provisions are needed on the airdrop item.

3.40 **Planform loading.** The rigged weight of a load divided by the maximum projected area of the rigged item.

3.41 **Projection.** The distance, measured along the road surface between the first vehicle axle to crest the aircraft ramp hinge and the extreme end of the loaded vehicle. See appendix B, figure 4 for illustration of standard dimensional terminology used throughout this standard. Note that the first axle to crest the ramp hinge may not be the first axle to negotiate the hinge depending on the degree of articulation of the axles.

Source: https://assist.dla.mil -- Downloaded: 2016-12-11T01:38Z
Check the source to verify that this is the current version before use.

3.42 **Ramp bundle.** Items packed in an A-7A cargo sling or an A-21, A-22, or A-23 fabric cargo bag with the energy dissipator and may have a plywood skid on the bottom of the container.

3.43 **Ramp crest.** The crest of the ramp is the point where the inclined ramp joins the aircraft cargo floor at the hinge line. It is the critical point with respect to underside clearances of items being loaded from the ground up the aircraft ramp.

3.44 **Recovery parachute system.** A system used to retard and stabilize the descent of an airdropped item.

3.45 **Rigged item.** The airdrop item including all airdrop rigging equipment.

3.46 **SAAM.** Special Assignment Airlift Mission. Prepare and submit DOD Form 1249 in accordance with AFR 76-38/AR 59-8.

3.47 **Shoring.** Shoring is a material used to distribute a load over a larger area. Thus it is possible to carry a load with a higher weight concentration than normally would be allowed. Both plywood and dimension lumber are commonly used for shoring purposes.

a. Approach shoring (step-up shoring). Approach shoring is used to reduce the ramp angle that a vehicle must traverse during aircraft on/ offloading. Reduction of the ramp angle becomes necessary to avoid interference problems where there are minimal underside, overhead, or overhang clearances. Approach shoring requires large amounts of lumber and is not an acceptable alternative to designing to have adequate clearances.

b. Floor protection shoring. Shoring that is required to protect the aircraft ramps and cargo compartment floor from damage during on/ offloading and flight of tracked vehicles or vehicles with wheels that have lugs, cleats, studs, metal rolling surfaces or small diameters.

c. Parking shoring. Shoring that is required under the wheels or tracks of vehicular cargo to distribute loads.

d. Rolling shoring. Shoring that is required to distribute weight on the cargo floor during on/offloading.

e. Sleeper shoring. Sleeper shoring is used to prevent the movement of a vehicle due to gust and flight manuever load conditions where tires or suspension system cannot withstand these loads without failure or depression producing slack in tiedown devices. This type of shoring is placed between the aircraft floor and a structural part of the vehicle such as the frame.

3.48 **Strategic airlift.** That airlift which can be applied to effect a strategic advantage and is characterized by the continuous or sustained air movement of units, personnel, and logistic support between the CONUS and overseas areas and between area commands. Strategic airlift forces will, when required for augmentation of tactical airlift forces, effect delivery of forces into objective areas employing airdrop or airland delivery as far forward as the tactical situation permits.

Source: https://assist.dla.mil -- Downloaded: 2016-12-11T01:38Z
Check the source to verify that this is the current version before use.

3.49 **Suspended item.** The rigged item without the recovery parachute system.

3.50 **Suspended weight.** The rigged weight minus the weight of the recovery parachute system.

3.51 **Suspension provision.** An integral fitting on the item for attaching the recovery parachute system.

3.52 **Tactical airlift.** The means by which personnel, supplies, and equipment are delivered by air on a sustained, selective, or emergency basis to dispersed sites at any level of conflict throughout a wide spectrum of climate, terrain, and conditions of combat. Air Force tactical airlift forces enhance the battlefield mobility of the Army in ground combat operations by providing a capability to airland or airdrop combat elements and providing these forces with sustained logistical support.

3.53 **Technical order (TO).** An AF publication that gives specific technical directives and information with respect to the inspection, storage, operation, modification, and maintenance of given AF items and equipment.

3.54 **Test loading.** A trial aircraft loading of an item(s) being evaluated for air transportability certification. Test loadings are normally limited to cases where the characteristics of items are such that analytical means alone are judged insufficient to determine an item's air transport eligibility. Because of the expense and manpower involved test loadings are normally only performed on ATTLA recommendation with the approval and support of MAC. Generally test loadings require the development and documentation of special procedures for handling and/or restraint.

3.55 **Tiedown device.** Chains or straps with their associated attaching hardware used to restrain cargo by being connected between the item tiedown provisions and the platform or aircraft floor.

3.56 **Tiedown fitting.** Ring type cargo restraint fittings which are part of the aircraft floor.

3.57 **Tiedown provision.** An integral fitting or part of an item for restraining the item to an airdrop platform or the aircraft floor using tiedown devices.

3.58 **Transportability report.** A report submitted on a transportability problem item during development/acquisition with all information necessary for a comprehensive transportability review. The report identifies transportability characteristics of proposed, newly designed, modified or off-the-shelf items and components thereof and will contain, to the extent available and pertinent, the information contained in paragraph A-11 of appendix A and figure B-1, Joint Regulation AR 70-44/OPNAVINST 4600.22B/AFR 80-18/MCO 4610.14C/DLAR 4500.25, DOD Engineering for Transportability.

3.59 **Transportability review.** An evaluation of the transportability characteristics of an equipment item or its components to assess its ability to be transported by the mode(s) of transportation specified in the materiel requirements documents.

Source: https://assist.dla.mil -- Downloaded: 2016-12-11T01:38Z
Check the source to verify that this is the current version before use.

3.60 **Treadway**. The high strength areas of the aircraft cargo floor specifically designed to support vehicle loads. Refer to appendix B for treadway location and strength.

3.61 **Ultimate strength**. The maximum force which a provision must withstand before breaking failure occurs.

3.62 **Unitized load**. Assembly, into a single load, of more than one package of one or more different line items of supply in such a manner that the load can be moved in an unbroken state from source to distribution point or user as far forward in the supply system as practical. It is concerned with containerization, palletization, and transportability of supplies with compatible properties normally handled by materials handling equipment.

3.63 **Validation loading**. A loading performed at the time of an item's first planned shipment to verify handling and tiedown procedures. Validation loadings are recommended when an item is judged by the ATTLA to be air transportable, but where circumstances exist which make close observation advisable during loading for first shipment. Validation loadings normally verify that standard handling and restraint procedures can be applied to the item.

3.64 **Waterline (WL)**. The vertical reference distance for an aircraft measured in inches from a fixed point.

3.65 **Yield strength**. The force at which a provision exhibits a permanent deformation or set of 0.002 inch per inch, in the direction of force application.

4. REQUIREMENTS

4.1 **Scope**. The requirements stated in this section represent those areas which must be considered when designing items that will be air delivered in fixed wing cargo aircraft. Because of differences in the physical characteristics of items to be shipped, and the aircraft used to transport them, not all requirements will apply in every case. While some overlap of requirements may exist, this standard attempts to categorize the information presented by air transport topics versus airdrop topics. Requirements will be developed only for those military and CRAF aircraft whose prime mission is or would be cargo transport. Where aerial delivery in other cargo aircraft is anticipated, contact the ATTLA for design criteria and guidance. In general, similar geometry and structural considerations apply to all aircraft. Discrete differences between aircraft are dependent on the specific structural design involved.

Compliance with the requirements of this standard constitutes a portion of the DOD Engineering for Transportability program. Joint regulation AR 70-44/OPNAVINST 4500.22B/AFR 80-18/MCO 4610.14C/DLAR 4500.25 designates the transportability agencies, promulgates policy, assigns responsibilities, and outlines procedures for conducting this program within the Army, Navy, Air Force, Marine Corps, and Defense Logistics Agency. NOTE: This joint regulation requires early submission of data packages to the ATTLA for air transportability engineering review. The regulation details proper procedural and item data requirements. Information for obtaining assistance and advice on air transport and airdrop matters is contained in section 6 herein.

Source: https://assist.dla.mil -- Downloaded: 2016-12-11T01:38Z
Check the source to verify that this is the current version before use.

4.2 Air transport requirements. This section presents those design requirements applicable to cargo items intended to be delivered point-to-point by conventional airlift modes. Because of the differences in the characteristics of items to be shipped and the aircraft used to transport them, not all requirements will apply in every case. A matrix has been developed (see appendix A, table I) to aid the designer in determining which requirements apply to specific load types. Requirements pertinent to all modes of standard airdrop delivery are addressed in 4.3 through 4.3.6.1.

4.2.1 Item size and configuration. The design of items shall be such that they can be loaded aboard aircraft in their operational configuration whenever possible. To the extent possible, the design goal should be to qualify items for aerial delivery under the most restrictive combination of requirements. When necessary, sectionalization or partial disassembly of items may be performed as a means of achieving this goal, however, care must be taken not to exceed the user's organic capability to reassemble the item within a specified time period under field conditions. The dimensional and structural characteristics of candidate transport aircraft which establish the item design limits are summarized in the appendix for each aircraft.

4.2.1.1 Cargo compartment clearances. Equipment and cargo in its shipping configuration shall be sized such that it can be on/offloaded and air delivered without causing damage to the aircraft structure or to the equipment/cargo being delivered. Equipment and cargo to be air transported shall be designed such that a minimum clearance between the top/sides of the equipment and aircraft interior is maintained at all times during loading and flight. The design of such equipment shall conform to the clearance parameters specified in the appendix for the aircraft being considered.

4.2.1.2 Projection limits. Vehicles and other wheeled cargo items which are to be loaded from the ground up the inclined aircraft ramp shall be loaded without use of approach shoring while maintaining the cargo compartment clearances of 4.2.1.1. Item height, overhang, and projection limits are established by the Cargo Projection Limits and the Vehicle Projection Limits charts shown in appendix B.

4.2.1.3 Vehicle overhang. Item design should minimize front and rear overhang and maximize ground clearance. Overhang should be limited such that interference between the item and the ramp or ground is avoided during inclined ramp loading procedures. Vehicles which are to be loaded from the ground up the inclined aircraft ramp shall be loaded without the use of approach shoring while maintaining clearance at the ground as well as at the ramp. Vehicle wheelbase, overhang, and ground clearance limitations are established by the Loading Overhang Limits charts presented in appendix B.

4.2.1.4 Ramp cresting. Wheeled/tracked vehicles and other cargo to be loaded from the ground must be able to negotiate the crest of the aircraft inclined ramp without damage to the aircraft or the cargo item. In addition to meeting the requirements of 4.2.4.5, wheeled/tracked vehicles and other cargo items to be loaded from the ground up the inclined aircraft ramp shall be able to negotiate the crest formed by the ramp and aircraft cargo floor with the cargo floor at its highest position above ground level.

Source: https://assist.dla.mil -- Downloaded: 2016-12-11T01:38Z
Check the source to verify that this is the current version before use.

4.2.1.5 **Emergency access.** The configuration and location of equipment and cargo secured in military aircraft for air transport or airdrop shall be such that a crew member wearing flight gear may pass from the front to the rear of the aircraft. On military aircraft without walkways (C-141B and C-5 have walk-ways) in the cargo compartment, a minimum clear space on the left-hand side of the aircraft, when facing forward, of 14 inches wide by 72 inches high or 30 inches wide by 48 inches high, shall be maintained at all times. On aircraft with walkways, these areas shall be kept free of all cargo to allow passage of crew members. Emergency access requirements for CRAF aircraft shall be satisfied in accordance with Federal Aviation Regulation, Part 25.

4.2.1.6 **Palletized cargo.** Where equipment can be air delivered secured to a pallet that locks into an integral aircraft rail system, the entire unit load shall meet the requirements of 4.2.3.2. Where such equipment can be secured to the pallet with MIL-N-27444 nets and straps, the equipment need not meet the requirements of 4.2.3.2. All other equipment shall be provided with tiedown provisions in accordance with 4.2.3.1. In all cases, palletized loads shall not exceed aircraft roller load limits specified in appendix B.

4.2.1.7 **Containers/shelters, and vans.** Where equipment can be secured within an enclosed container/shelter or van, the entire unit load shall meet the requirements of 4.2.3.2 and 4.2.5.2. Where palletization is used as a means of loading such containerized cargo, the additional requirements of 4.2.1.6 shall apply. Where other loading or placement configurations are used, the appropriate requirements (i.e., axle/wheel loads, tongue loads, floor loads, etc.) for that configuration shall be observed.

4.2.1.8 **463L system capatibility.** Equipment that is to be transported on its own base or which incorporates an integral pallet base shall be designed to be compatible with the 463L air cargo handling system. Smaller items which can be palletized should be designed to take maximum advantage of the weight and cube capability of the HCU-6/E pallet. Equipment which can be air transported on its own base or on an integral pallet base shall be designed to meet the following:

a. The pallet/base side lip shall be designed to and meet the requirements of MIL-P-27443.

b. Unless otherwise specified in the order or contract, the bottom of the pallet/base shall be capable of traversing all types of aircraft and cargo loader roller conveyors as shown in appendix B, figure 5.

c. The unit load shall withstand all loadings as imposed by all sets of roller conveyors unless particular sets are specified.

d. The pallet width for the C-130, C-141B, and C-5 aircraft shall be $108\ ^{+0}_{-1/8}$ inches.

Source: https://assist.dla.mil -- Downloaded: 2016-12-11T01:38Z
Check the source to verify that this is the current version before use.

4.2.1.9 **Special tools and transportability equipment.** The need for specialized tools and ground support equipment to prepare and load/offload cargo items shall be avoided to the maximum extent consistent with mission requirements. Where such tools/equipment are required, the type and quantity shall be identified and reported to the procuring activity or program office. Use of special tools and support equipment shall not degrade the user's mission capability, involve equipment not normally available at the deployment site, or compromise the safety of operating personnel.

4.2.2 **Item handling provisions.** To facilitate handling, the equipment shall be as compact and lightweight as practical; however, reliability and maintainability shall not be substantially impaired in meeting this requirement. Any projected design compromise for the sake of air transportability shall be brought to the attention of the procuring activity. It shall be possible to load the equipment into the aircraft and readily position the equipment without damage to the aircraft structure using a minimum amount of handling equipment.

4.2.2.1 **Materials handling equipment (MHE) requirements.** Whenever possible, item design shall incorporate features which permit on/offloading without the use of materials handling equipment other than that normally a part of the aircraft equipment such as ramps and winch. Provisions for winching shall include attachment points which will permit a straight ahead pulling force. Where MHE is required to assist in item disassembly/assembly and loading, it must be within the organic capability of the using unit to make the item operationally ready within the specified time and manpower constraints.

4.2.2.2 **Shoring requirements.** The use of any type of shoring shall be avoided to the maximum extent consistent with mission requirements. To the extent that such design does not compromise performance, items shall incorporate features which enhance their handling characteristics so that they can be on/offloaded without the use of shoring.

4.2.3 **Item restraint provisions.** The equipment shall be capable of being restrained against and withstanding without loss of serviceability, forces imposed by aircraft flight and maneuvering operations. All cargo items, except cargo loaded on HCU-6/E pallets and restrained by MIL-N-27444 nets, shall meet the applicable requirements of 4.2.3.1, 4.2.3.2, and 4.2.3.3.

4.2.3.1 **Tiedown provisions.** Equipment shall be provided with not less than four tiedown provisions which can adequately restrain the equipment when subjected to the accelerations specified in 4.2.3.2. The tiedown provisions will accommodate both ends of MIL-T-25959 and MIL-T-27260 tiedown devices and shall be marked in accordance with 4.2.7. The tiedown provisions shall be capable of accepting the maximum number of tiedown devices as required by the tiedown grid pattern. These tiedown provisions shall be suitable for use in conjunction with the tiedown provisions on the aircraft floor, which in general, have a capacity of 10,000 pounds and are placed on 20-inch centers and on the C-5, 25,000 pounds at 40-inch centers.

Unless specified in the order or contract, a proposed tiedown grid pattern shall be provided for either C-130 or C-141 aircraft.

Source: https://assist.dla.mil -- Downloaded: 2016-12-11T01:38Z
Check the source to verify that this is the current version before use.

4.2.3.2 **Restraint criteria.** Cargo items in their shipping configuration shall be capable of being restrained to and withstanding, without loss of serviceability, the following forces applied statically and independently:

Direction	Load Factor
Up	2.0 G (3.7 G for nuclear cargo)
Down	4.5 G

Cargo items in their shipping configuration shall be capable of being restrained to and withstanding, without loss of structural integrity, the following accelerations applied statically and independently:

Direction	Load Factor
Forward	3.0 G
Aft	1.5 G
Lateral	1.5 G

For the three conditions above, internal equipment need not remain serviceable. Refer to 4.2.5.1 for other serviceability requirements in this area.

(1.0 is the acceleration due to gravity; all directions are relative to the aircraft.)

a. The equipment shall also be able to withstand the following changes in velocity (ΔV) of the aircraft floor within 0.1 second without loss of serviceability.

Direction	ΔV
Up	10.0 ft/sec (15.2 ft/sec for nuclear cargo)
Down	11.5 ft/sec

Cargo items in their shipping configuration shall be capable of being restrained to and withstanding, without loss of structural integrity, the following changes in velocity within .1 sec applied independently:

Direction	ΔV
Forward	10.0 ft/sec
Aft	5.0 ft/sec
Lateral	5.0 ft/sec

For the three conditions above, internal equipment need not remain serviceable. Refer to 4.2.5.1 for other serviceability requirements in this area.

The final velocity must be held long enough for an adequate cargo response to the input.

Source: https://assist.dla.mil -- Downloaded: 2016-12-11T01:38Z
Check the source to verify that this is the current version before use.

b. When equipment is of such size or configuration that it can be loaded into cargo aircraft with either end facing forward (i.e., a truck that can be driven forward and backed into the aircraft), the highest load factor shall apply both fore and aft. When the loading direction is fixed or specified, only the forward requirement shall apply in the forward direction and only the aft requirement shall apply in the rearward direction.

c. Vehicles and other equipment shall be capable of withstanding, without loss of serviceability, the above mentioned vertical downward load factor imposed on their wheels, suspension systems, or support.

d. If an item is designated for airdrop: (1) the 3 g load factor shall be applied both fore and aft, and (2) the rigged item shall not exceed the aircraft restraint rail capability to withstand the load factors in this paragraph.

e. Other non-MAC operated aircraft may require higher levels of restraint. Refer to the specific aircraft loading manual.

4.2.3.3 **Accompanying loads.** Where a requirement exists for equipment to be air transported while carrying or having attached to itself additional equipment or cargo, the entire unit load shall meet the requirements of 4.2.3.2. Accompanying loads shall not exceed the cross-country payload capability of the vehicle or its equivalent (see 4.2.4.6). Where the air delivered load is different from the general load capacity of the vehicle, the allowable load shall be marked in accordance with 4.2.7. The additional equipment shall be independently tested to insure restraint to the main item of equipment.

4.2.4 **Item weight limits.** When in its shipping configuration, item gross weight and weight distribution shall meet the requirements of the following subparagraphs as appropriate to the type of item under consideration.

4.2.4.1 **Gross weight/center of gravity.** The gross weight of items in their shipping configuration shall not exceed the aircraft limits specified in AFR 76-2 for the mission/aircraft combination under consideration. Where design flexibility permits, the center of gravity of cargo items should correspond with the geometric center as closely as possible. In all cases, the center of gravity shall be determined and marked on the item in accordance with 4.2.7.

4.2.4.2 **Aircraft compartment limits.** In addition to the requirements of 4.2.4.1, cargo items shall not impose loads in any compartment in excess of the values shown in the compartment load limit charts for the aircraft under consideration. Both loading and flight limits must be observed and items occupying more than one compartment must be selectively located so they do not overload any compartment.

4.2.4.3 **Aircraft roller conveyor limits.** Palletized/platform loads and items having integral bases which contact the aircraft 463L roller conveyor system shall not impose loading or flight forces on the roller system which exceed aircraft roller or conveyor load limits. These limits are influenced by the contact pattern as well as compartment floor strength considerations and are addressed in appendix B.

Source: https://assist.dla.mil -- Downloaded: 2016-12-11T01:38Z
Check the source to verify that this is the current version before use.

4.2.4.4 **Aircraft floor/ramp loading limits**

4.2.4.4.1 **Concentrated loads.** Loads imposed by cargo items over relatively small areas of the cargo floor/ramp shall not exceed the concentrated load pressures shown in appendix B. In addition, spacing between load concentrations shall be no less than that specified for the candidate aircraft.

4.2.4.4.2 **Linear loads.** In addition to the requirements of 4.2.4.4.1, cargo items in their shipping configuration shall not impose a running load in excess of the linear floor/ramp loading limits for the zone and compartment as shown in the appendix for the aircraft concerned.

4.2.4.4.3 **Tongue loads.** Loads imposed on the aircraft floor/ramp by vehicle tongues shall not exceed the maximum load limit, when specified, or the concentrated load limits of 4.2.4.4.1.

4.2.4.4.4 **Axle loads and axle spacing limits.** Vehicle axle loads shall not exceed the aircraft zone and compartment load limits at the appropriate axle spacings shown in appendix B. Both flight and loading limits must be observed.

4.2.4.4.5 **Wheel/tire loads.** In addition to the requirements of 4.2.4.4.4, vehicles and other wheeled cargo shall not impose pneumatic tire loads or steel/hard rubber wheel loads in excess of the aircraft zone and compartment limitations for both flight and loading conditions. In addition, pneumatic tires shall not be loaded beyond their rated capacity at the selected inflation pressure. Tires with a solid inner (run flat) core are restricted to the hard rubber wheel floor limitations.

4.2.4.4.6 **Treadway/non-treadway loads.** Equipment shall be designed to utilize the higher strength treadway sections of the aircraft floor/ramp whenever such design does not impair item performance. In all cases, loads imposed by such equipment shall not exceed limit loads for the aircraft zone and compartment under both loading and flight conditions.

4.2.4.4.7 **Shoring limitations.** Use of wood shoring for relief of overload conditions shall be avoided to the maximum extent possible. The design of all equipment which imposes unacceptable floor loadings under flight conditions shall incorporate integral devices to function as sleeper shoring. Normally such devices will not function to relieve excess on/offload forces.

4.2.4.5 **Ramp hinge limits.** In addition to the requirements of 4.2.1.4, cargo items designed to be loaded from the ground up the inclined aircraft ramp shall not impose cresting loads in excess of the ramp hinge limits shown in appendix B.

4.2.4.6 **Vehicle suspension limits.** In addition to the requirements of 4.2.3.3, wheeled vehicles shall not impose forces on their suspension systems which exceed the military tactical (cross-country) rated capacity of the system or its commercial equivalent.

Source: https://assist.dla.mil -- Downloaded: 2016-12-11T01:38Z
Check the source to verify that this is the current version before use.

4.2.5 **Flight induced environment**

4.2.5.1 **Shock and vibration.** Cargo items shall be designed or configured for transport to withstand, without loss of performance or serviceability, the shock and vibration environment encountered in aircraft flight and ground maneuvering operations or during cargo on/offloading.

4.2.5.2 **Rapid decompression.** Cargo items shall be designed with pressure relief devices or shall be so configured for air shipment as to prevent any part from becoming a projectile in the event of catastrophic loss of aircraft cabin pressure.

4.2.6 **Special handling**

4.2.6.1 **Hazardous materials.** Where equipment is capable of carrying or having attached to itself hazardous materials, the containment or packaging of these materials shall meet the requirements of AFR 71-4/TM 38-250/ NAVSUP PUB 505/MCO P4030.19/and DLAM 4145.3, or Title 49, Parts 100-199, Code of Federal Regulations. The containment, packaging, or other preparation of these materials shall be performed and certified such that they do not jeopardize the safety of cargo handlers, flight crews, or the aircraft.

4.2.6.2 **In-flight requirements.** Where cargo items require maintenance of special in-flight conditions such as venting of hazardous materials, auxiliary power, or controlled cargo compartment temperatures, their design shall incorporate the necessary hardware to interface properly with the aircraft installed facilities.

4.2.7 **Marking.** Equipment shall be marked in accordance with the provisions of MIL-STD-129 and MIL-STD-209, as appropriate, to provide the information necessary to facilitate loading and restraining the item in the aircraft. Unless otherwise specified, the marking shall be stenciled in an appropriate location or provided on the vehicle data plate. Marking shall include at least the following:

4.2.7.1 **Tiedown provisions.** Tiedown attachments or fittings shall be identified, and the allowable load shall be indicated, and a representative tiedown grid pattern shall be proposed for aircraft as defined in the order or contract. If no aircraft is defined in the order or contract, the tiedown grid pattern shall be proposed for both the C-130 and C-141B aircraft. This does not apply to equipment that meets the requirements of 4.2.1.6.

4.2.7.2 **Shipping weight and center-of-gravity location.** The shipping weight of the equipment in an air transportable condition shall be marked in a conspicuous location. The center-of-gravity along each axis influencing the method of loading and tiedown shall be marked on the item.

4.2.7.3 **Hoisting fittings.** When equipment or cargo is to be hoisted onto an aircraft or onto a pallet or platform, the hoisting fittings shall be identified and the required hoisting capacity marked. The locations where forklifts may be applied shall be identified.

Source: https://assist.dla.mil -- Downloaded: 2016-12-11T01:38Z
Check the source to verify that this is the current version before use.

4.2.7.4 **Other markings.** Other markings shall be provided to cover the following, where applicable:

a. Instructions for retraction of wheels or casters to provide greater bearing surface or clearance.

b. Installation of special struts or braces to meet flight loads.

c. Orientations in aircraft when critical.

d. Instructions for special servicing or other preparation for air shipment.

e. Other precautions to be observed during on/offloading and flight.

4.3 **Airdrop requirements.** The item being developed for airdrop shall comply with the following detailed requirements for the specified standard mode(s) of airdrop.

4.3.1 **Air transport environment.** The airdrop item shall comply with the air transportability requirements in 4.2.3.2, 4.2.3.3, 4.2.4.3, 4.2.5, and 4.2.6.

4.3.2 **Item provisions**

4.3.2.1 **Tiedown provisions.** The item shall be provided with tiedown provisions in accordance with the requirements for airdrop in MIL-STD-814, paragraph 5.1.

4.3.2.2 **Extraction provision.** The item shall be provided with extraction provision(s) in accordance with requirements for airdrop in MIL-STD-814, paragraph 5.3.

4.3.2.3 **Item suspension provisions.** The item shall be provided with suspension provisions in accordance with the requirements for airdrop in MIL-STD-814, paragraph 5.2.

4.3.2.4 **Emergency aft restraint provisions.** The item shall be provided with emergency aft restraint provisions in accordance with requirements in MIL-STD-814, paragraph 5.6.

4.3.3 **Item weight**

4.3.3.1 **Door bundle weight.** The item suspended weight shall not exceed 500 pounds.

4.3.3.2 **Ramp bundle weight.** The item suspended weight shall not exceed 2200 pounds. The total weight of the rigged item shall not exceed 1500 pounds when the C-130 ramp bundle delivery system is to be used.

4.3.3.3 **Low velocity platform airdrop weight.** The item rigged weight shall not exceed 35,000 pounds.

4.3.3.4 **LAPES weight.** The item rigged weight shall not exceed 35,000 pounds.

Source: https://assist.dla.mil -- Downloaded: 2016-12-11T01:38Z
Check the source to verify that this is the current version before use.

4.3.4 **Dimensional limits**

4.3.4.1 **Door bundle dimensional limits.** The rigged door bundle dimensions shall not exceed 48 inches length by 30 inches width by 66 inches height, including the attached recovery parachute system.

4.3.4.2 **Ramp bundles dimensional limits**

4.3.4.2.1 **Container delivery system dimensional limits.** The item shall not exceed 53.5 inches in width, 96 inches in length and 83 inches in rigged height.

4.3.4.2.2 **C-130 bundle delivery system dimensional limits**

4.3.4.2.2.1 **A-7A and A-21 containers dimensional limits.** The rigged item shall not exceed 27 inches in length, 42 inches in width, and 48 inches in height.

4.3.4.2.2.2 **A-22 containers dimensional limits.** The rigged item shall not exceed 96 inches in length, 53.5 inches in width, and 48 inches in height.

4.3.4.3 **Low velocity platform airdrop dimensional limits**

4.3.4.3.1 **Length.** The length of the airdrop-configured item shall be capable of being rigged on a standard low velocity airdrop platform. The overhang beyond the ends of the platform shall not extend below an imaginary plane extending up from the lower edge of the platform at an angle of 30 degrees from the horizontal. The extent of the overhang shall allow the rigged item to exit the aircraft without item or aircraft damage, with an exit velocity of 20 ft/sec from the C-130 aircraft, and 1/4 G acceleration for the C-141 aircraft. Normal overhang is up to 36 inches.

4.3.4.3 **Low velocity platform airdrop dimensional limits**

4.3.4.3.1 **Length.** The length of the airdrop-configured item shall be capable of being rigged on a standard low velocity airdrop platform. The overhang beyond the ends of the platform shall not extend below an imaginary plane extending up from the lower edge of the platform at an angle of 30 degrees from the horizontal. The extent of the overhang shall allow the rigged item to exit the aircraft without item or aircraft damage, with an exit velocity of 20 ft/sec from the C-130 aircraft, and 1/4 G acceleration for the C-141 aircraft. Normal overhang is up to 36 inches.

4.3.4.3.2 **Width**

4.3.4.3.2.1 **C-130 aircraft airdrop width.** The width of the airdrop item shall not exceed 108 inches.

4.3.4.3.2.2 **C-141 aircraft airdrop width.** The width of the airdrop item shall not exceed 115 inches. The maximum projected area in the lateral vertical plane shall not exceed 10,200 square inches.

Source: https://assist.dla.mil -- Downloaded: 2016-12-11T01:38Z
Check the source to verify that this is the current version before use.

4.3.4.3.3 **Height**. The longitudinal profile of the rigged item shall not exceed 100 inches for all points aft of the center of gravity. Forward of the center of gravity, the rigged height shall not exceed the height profile jettison limits in appendix B.

4.3.4.4 **LAPES dimensional limits**. The LAPES dimensional limits are same as the C-130 aircraft low velocity airdrop dimensional limits in 4.3.4.3.

4.3.5 **Planform loading**. The planform loading of the rigged item shall not be less than the following limits:

Mode	Minimum Planform Loading (lb/ft^2)
Door Bundle	28
Ramp Bundle	28
Low Velocity Platform Airdrop	35
LAPES	35

4.3.6 **Impact survivability**. The airdrop item shall be capable of withstanding the deceleration forces imposed by ground impact of the rigged item and thereafter comply with the performance requirements of the applicable end item specification. Deceleration forces are documented in MIL-STD-669, paragraph 5.4, for low velocity airdrop.

4.3.7 **Airdrop of ammunition/explosives**. To preclude any possibility of damage to the aircraft or injury to the aircrew, the fragmentation or blast area for ammunition/explosive items shall be sufficiently less than the distance between any possible detonation point and the aircraft.

4.3.7.1 **LAPES of ammunition/explosives**. Items shall be capable of withstanding the malfunctioning drop simulation test in MIL-STD-331, Test 117, for the following conditions:

Item oriented nose up

Item oriented nose down

Item oriented horizontally

The explosives and ammunition shall not detonate, deflagrate, or function during or immediately after test.

5. VERIFICATIONS

5.1 **Scope verification**. This paragraph does not require verification.

5.2 **Air transport verification**

5.2.1 **Item size and configuration verification**. Compliance with the requirements of 4.2.1 shall be met when it can be shown by measurement, engineering analysis, validation loading, or formal test loading that the item in its shipping configuration satisfies the appropriate requirements of subparagraph 4.2.1.1 through 4.2.1.9. Reference to table I at the end of this appendix will provide guidance as to which requirements apply to specific load types.

Source: https://assist.dla.mil -- Downloaded: 2016-12-11T01:38Z
Check the source to verify that this is the current version before use.

5.2.1.1 **Cargo compartment clearances verification.** The requirements of 4.2.1.1 shall be met when it has been shown by measurement, engineering analysis, validation loading or formal test loading that the item in its shipping configuration satisfies the overhead and side clearance criteria specified in appendix B.

5.2.1.2 **Projection limits verification.** The requirements of 4.2.1.2 shall be met when it can be demonstrated that the item can be ground-loaded up the aircraft ramp. Successful loading shall consist of maintenance of cargo-to-aircraft clearances during loading and positioning for restraint without the use of approach shoring. Verification may be accomplished by measurement, engineering analysis, validation loading or formal test loading.

5.2.1.3 **Vehicle overhang verification.** Conformance with 4.2.1.3 shall be met when it can be shown that the vehicle can be ground-loaded up the aircraft ramp without striking either the ramp or the ground. Approach shoring shall not be used to assist the loading process. Compliance may be shown by measurement, engineering analysis, validation loading, or formal test loading.

5.2.1.4 **Ramp cresting verification.** Dual verifications must be met to totally satisfy the requirements of 4.2.1.4. The ramp hinge limit requirements of 4.2.4.5 must be met concurrently with the clearance requirements of 4.2.1.4. The verification for 4.2.4.5 requirements are addressed in 4.2.4.5. Compliance with the requirements of 4.2.1.4 shall be met when it can be shown by measurement, engineering analysis, validation loading or formal test loading that the vehicle can be loaded from the ground without striking the ramp hinge. Approach shoring will not be used to assist the loading process.

5.2.1.5 **Emergency access verification.** The requirements of 4.2.1.5 shall be met when the height and width of the clear areas, with the cargo restrained in position aboard the aircraft, equals or exceeds the values shown in appendix B, figure 42 or Federal Aviation Regulation, Part 25. An alternate method of verification involves a demonstration that a flight crewmember in appropriate gear can negotiate passage from front to rear of the aircraft with the cargo restrained in flight position.

5.2.1.6 **Palletized cargo verification.** The requirements of 4.2.1.6 shall be met when engineering analysis or actual testing shows that the restraint load satisfies all restraint criteria and that the load in its palletized configuration does not exceed roller load limits for the aircraft concerned. Where MIL-N-27444 nets cannot be used to provide item restraint, the analysis or testing must verify the adequacy of the attachment devices under the worst case tiedown pattern(s) using MIL-T-25959 or MIL-T-27260 tiedown devices. The MIL-T-27260 tiedown devices are qualified at their rated capacities and need not be further tested to satisfy the requirements of 4.2.1.6.

5.2.1.7 **Containers/shelters and vans verification.** Multiple requirements must be met to show compliance with 4.2.1.7. The nature of the load configuration determines which of several requirements apply in a given instance. All loads must conform to the verification procedures of 5.2.3.2 and 5.2.5.2. Where the containers/shelters or vans are palletized for loading and flight, the additional verification of 5.2.1.6 also applies.

Source: https://assist.dla.mil -- Downloaded: 2016-12-11T01:38Z
Check the source to verify that this is the current version before use.

5.2.1.8 463L system compatibility verification. Compliance with the requirement in 4.2.1.8 shall be verified by methods appropriate to the particular design involved. Where such design incorporates features of the 463L pallet, verification in accordance with section 4 or MIL-P-27443 is required. All cargo items shall meet the verification criteria of 5.2.3.2. For skidded loads and loads having less than full width bases, it shall be shown that such loads can traverse the roller conveyors of the specified aircraft and appropriate ground handling equipment. Analytical proof based on roller conveyor capabilities and dimensions is the preferred method of verification. Validation or test loadings may be required depending on the specific design involved. The ATTLA will make the determination of need for such loadings.

5.2.1.9 Special tools and transportability equipment verification. Demonstration of acceptance procedures and elapsed times shall be used as the verification criteria for this requirement. Acceptable procedures shall be specified by the user/program office based on mission requirements. Where such procedures impact on aircraft loading/unloading or flight safety they shall have the concurrence of the ATTLA. Acceptance of procedures includes acceptance of the type and quantity of special tools and equipment required to perform the procedure.

5.2.2 Item handling provisions verification. The nature of the requirements imposed by 4.2.2 does not lend them to strict objective verification. There are no absolute standards to be met, but rather design goals to be approached within the framework of mission requirements. It is important that during item development the designer consider certain factors unique to the military operational environment. Such considerations must include operating in very austere conditions, frequent lack of adequate support equipment, the need for rapid aircraft turnaround times, especially in combat areas, and human engineering factors including the skill level of personnel operating the equipment during on/offloading. Acceptability of handling provisions is frequently based on factors similar to those in 5.2.1.9.

5.2.2.1 MHE requirements verification. This requirement shall be satisfied when actual on/offloading under simulated mission conditions shows that procedures and elapsed times meet the criteria established by the user/program office for the item/mission scenario. Concurrence of the ATTLA shall be necessary where the methods and/or equipment used impact on aircraft/personnel safety during loading or flight.

5.2.2.2 Shoring requirements verification. Compliance with 4.2.2.2 requirements shall be determined on a case-by-case basis by the ATTLA. Compliance shall be considered achieved when it has been shown that all reasonable efforts to design out the need for approach/rolling shoring have been exhausted.

5.2.3 Item restraint provision verification. Compliance with 4.2.3 requirements shall be considered to be met when the appropriate requirements of 4.2.3.1, 4.2.3.2 and 4.2.3.3 are complied with.

Source: https://assist.dla.mil -- Downloaded: 2016-12-11T01:38Z
Check the source to verify that this is the current version before use.

5.2.3.1 **Tiedown provisions verification.** The requirements of 4.2.3.1 shall be met when it can be shown by engineering analysis or actual test that the proposed tiedown provisions are adequate in strength, location, size, and number to accept the required MIL-T-25959 and MIL-T-27260 tiedown devices to provide the item restraint called out in 4.2.3.2.

5.2.3.2 **Restraint criteria verification.** Compliance with the requirements of 4.2.3.2 shall be assured when it can be demonstrated by engineering analysis or actual test that the item in its shipping configuration and restrained as it would be for flight can be subjected to the stated static and dynamic loads without loss of structural integrity of the item or without incurring damage to the aircraft. If loss of structural integrity occurs or if any parts of the item become projectiles, it shall be sufficient to cause rejection of the load for airlift. If loss of function/serviceability occurs during verification of the vertical up or vertical down restraint criteria requirement, it shall be sufficient to cause rejection of the load for airlift. For palletized items in which the item is restrained to the pallet, the item center of gravity location shall be verified by analysis or test. Where a vehicle does not have a cross-country weight rating and its weight or axle/suspension loading exceeds 80 percent of its highway gross vehicle rating, test or complete analysis is required to verify that the item can withstand the downward load factor.

5.2.3.3 **Accompanying loads verification.** The requirements of 4.2.3.3 shall be verified in accordance with the provisions of 5.2.3.2 and 5.2.7, if appropriate.

5.2.4 **Item weight limits verification.** Compliance with the verification procedures of each of the appropriate subparagraphs, 5.2.4.1 through 5.2.4.6, shall show compliance with this requirement.

5.2.4.1 **Gross weight/center of gravity verification.** Compliance with this requirement shall be verified by comparison of item weight, aircraft and mission scenario with the appropriate payload-range data. The acceptability of item center of gravity shall be verified by measurement or analysis and comparison with the CG limit data. Marking shall be considered satisfactory when it meets the requirements of 4.2.7.

5.2.4.2 **Aircraft compartment limits verification.** Verification of this requirement shall be by comparison of each load point with the appropriate compartment load limit chart. The requirement is satisfied if no load exceeds any compartment limit either during loading or in flight.

5.2.4.3 **Aircraft roller conveyor limits verification.** Compliance with this requirement may be shown by analysis for loads exhibiting uniform force distribution properties. For complex loads which exhibit non-uniform loading, instrumented tests may be required if the load concentrations approach the limiting values for the aircraft roller system or if a coplanar attitude between load and roller system cannot be maintained during loading/offloading.

Using initial analysis, if the rigged airdrop item's weight transmits a loading of 1000 pounds per linear (longitudinal) foot or above through the energy dissipating material over the contact area, a test of a rigged item on an

Source: https://assist.dla.mil -- Downloaded: 2016-12-11T01:38Z
Check the source to verify that this is the current version before use.

instrumented roller test bed mounted on a concrete slab is required. Sets of roller load measurements for each roller under the rigged airdrop shall be recorded. Sufficient sets of data shall be recorded to establish a 0.90 probability that at least 95 percent of the distribution from which this set of roller load samples was taken will be less than the determined value for each individual roller. Where there are items similar to previously qualified items, and less critical in loading, analysis will suffice. Testing is normally conducted by the Government.

5.2.4.4 **Aircraft floor/ramp loading limits verification**

5.2.4.4.1 **Concentrated loads verification.** The requirements of 4.2.4.4.1 shall be satisfied when it can be shown by measurement or analysis that the actual load pressure values do not exceed the limit load data contained in appendix B.

5.2.4.4.2 **Linear loads verification.** Paragraph 4.2.4.4.2 requirements shall be satisfied when it can be shown by measurement or analysis that the item in its shipping configuration does not impose running loads in excess of limit load values shown in appendix B.

5.2.4.4.3 **Tongue loads verification.** Compliance with the requirements of 4.2.4.4.3 shall be met when, with the vehicle in its shipping configuration, the tongue load imposed on the aircraft floor does not exceed either the maximum load specified in appendix B or the requirements of 4.2.4.4.1.

5.2.4.4.4 **Axle loads and axle spacing limits verification.** To assure verification of the requirements of 4.2.4.4.4 requires simultaneous satisfaction of axle load limits and axle spacing limits as defined in appendix B. Compliance with these requirements shall exist when no axle loads exceed the limits and the appropriate minimum axle spacing requirements are met. Failure to meet either criteria shall be cause for load rejection.

5.2.4.4.5 **Wheel/tire loads verification.** Compliance with 4.2.4.4.5 requirements must be verified by comparing pneumatic tire loads or hard rubber/steel wheel loads of the item in its shipping configuration with the corresponding limit load values in appendix B. Items with tire/wheel loads that exceed the values shown in appendix B or are loaded beyond the manufacturer's recommended rated capacity shall be rejected.

5.2.4.4.6 **Treadway/non-treadway loads verification.** The requirements of 4.2.4.4.6 shall be satisfied when it can be shown by analysis or measurement that the item, in its shipping configuration (including shoring when used) does not impose loads on the treadway/non-treadway sections of the aircraft floor/ramp in excess of the values shown in appendix B. Where the item imposes a load on both treadway and non-treadway sections, loads in excess of the value for the non-treadway area shall be cause for rejection. Failure to meet aircraft compartment limits for both loading and flight conditions shall also be cause for item rejection.

Source: https://assist.dla.mil -- Downloaded: 2016-12-11T01:38Z
Check the source to verify that this is the current version before use.

5.2.4.4.7 **Shoring limitations verification.** This requirement shall be considered to be satisfied when analysis of the floor/ramp loads imposed by the integral sleeper shoring devices shows that the previous overload condition without their use has been relieved.

5.2.4.5 **Ramp hinge limits verification.** The requirements of 4.2.4.5 shall be met when it can be shown by analysis or measurement that the maximum load imposed by an item in its shipping configuration at the moment it crests the aircraft ramp does not exceed the limit value for the aircraft as shown in appendix B.

5.2.4.6 **Vehicle suspension limits verification.** This requirement has been met when the gross vehicle weight of the vehicle has been determined to be equal to or less than the published cross-country/tactical rated value or the ATTLA-determined value for those vehicles which do not have cross-country/tactical ratings.

5.2.5 **Flight induced environment verification**

5.2.5.1 **Shock and vibration verification.** This requirement shall be met when analysis, demonstration, or formal testing of the items in their shipping configuration shows compliance with the requirements for shock and vibration testing of MIL-STD-810, Environmental Test Methods. In addition, cargo with suspension frequency modes between zero and 20 Hz must have sufficient damping verified by test, analysis, or demonstration.

5.2.5.2 **Rapid decompression verification.** Compliance with this requirement shall be verified by analysis or formal testing which confirms that the test item can withstand an internal pressure differential of 8.3 psi developed in 0.5 sec or less without any part of the item becoming a missile.

5.2.6 **Special handling verification**

5.2.6.1 **Hazardous materials verification.** This requirement shall be met when the hazardous item(s) have been certified as meeting packaging requirements by the issuance of a DD Form 1387-2, Special Handling Data/Certification, by a qualified certifier.

5.2.6.2 **In-flight requirements verification.** Compliance with this requirement shall be verified on an individual case basis by inspection of item hardware to assure compatibility with aircraft facilities in use at the time the airlift requirement exists.

5.2.7 **Marking verification.** Compliance with the requirements of 4.2.7 and subparagraphs 4.2.7.1 through 4.2.7.4 shall be verified by inspection of markings and comparison with the standards set forth in MIL-STD-129 or MIL-STD-209, as appropriate.

5.3 **Airdrop verification**

5.3.1 **Air transport environment verification.** Compliance with the requirements of 4.4.1 shall be in accordance with the verification requirements in 5.2.3.2, 5.2.3.3, 5.2.4.3, 5.2.5, and 5.2.6.

Source: https://assist.dla.mil -- Downloaded: 2016-12-11T01:38Z
Check the source to verify that this is the current version before use.

5.3.2 Item provisions verification

5.3.2.1 Tiedown provisions verification. Compliance with the requirements of 4.3.2.1 shall be determined as follows. Provisions shall be identified. Measurements of the provisions' required dimensions within an acceptable accuracy shall be made. Analysis of the provision's capability, e.g., limit load and ultimate loads shall be provided for the required range of loadings. Analysis shall include the strength of the attachment. Results of static pull tests of the provisions attached to the item to the limit load can be submitted in lieu of analysis. Line of force for the static pull tests shall be applied at the most critical condition within the required range of applied forces. Where provisions are attached to the main item by welds, the integrity of the welds shall be verified by non-destructive testing or static pull tests to the limit load as described above.

5.3.2.2 Extraction provision verification. Compliance with requirements of 4.3.2.2 shall be determined as follows. Provisions shall be identified. Measurements of the provision's required dimensions within an acceptable accuracy shall be made.

The provision attached to the item shall be subjected to a static test load equivalent to 1.4 times the limit load requirement within ±5 degrees of horizontal. Results of static testing on vehicles with the same attachment of the same type of provision and the equivalent item structural capability can be submitted in lieu of actual testing. However, where provisions are attached by welds, the integrity of the welds shall be verified by non-destructive testing or static pull tests to the limit load as described above.

5.3.2.3 Item suspension provision verification. Compliance with the requirement of 4.3.2.3, Item Suspension Provision, shall be in accordance with the same verification requirements in 5.3.2.1 with the exception that the static pull test shall be to a minimum of 1.25 times the limit load.

5.3.2.4 Emergency aft restraint provisions verification. Compliance with the requirements of 4.3.2.4 shall be in accordance with MIL-STD-814, paragraph 5.7.5.

5.3.3 Item weight verification

5.3.3.1 Door bundle weight verification. Compliance with the requirements of 4.3.3.1 shall be determined by measurement of the item's suspended weight on certified scales.

5.3.3.2 Ramp bundle weight verification. Compliance with 4.3.3.2 shall be determined by measurement of the rigged or suspended item on certified scales.

5.3.3.3 Low velocity platform airdrop weight verification. Compliance with requirement 4.3.3.3 shall be determined by measurement of the item airdrop weight on certified scales.

5.3.3.4 LAPES weight verification. Compliance with requirement 4.3.3.4 shall be in accordance with the same verification requirements as in 5.3.3.3.

Source: https://assist.dla.mil -- Downloaded: 2016-12-11T01:38Z
Check the source to verify that this is the current version before use.

5.3.4 Dimensional limits verification

5.3.4.1 Door bundle dimensional limits verification. Compliance with requirement 4.3.4.1 shall be determined by rigging the item in accordance with FM 10-501/TO 13C7-1-11 and measuring the rigged item height, width and length.

5.3.4.2 Ramp bundles

5.3.4.2.1 Container delivery system dimensional limits verification. Compliance with requirement 4.3.4.2.1 shall be determined by rigging the item in accordance with procedure in FM 10-501/TO 13C7-1-11 and measuring the rigged width, length, and height.

5.3.4.2.2 C-130 bundle delivery system dimensional limits verification

5.3.4.2.2.1 A-7A and A-21 container dimensional limits verification. Compliance with requirement 4.3.4.2.2.1 shall be determined by rigging the item in accordance with procedures in FM 10-501/TO 13C7-1-11 and measuring the rigged height, width and length.

5.3.4.2.2.2 A-22 container dimensional limits verification. Compliance with requirement 4.3.4.2.2.2 shall be in accordance with the same verification requirements as in 5.3.4.2.2.1.

5.3.4.3 Low velocity platform airdrop dimensional limits verification

5.3.4.3.1 Length verification. Compliance with requirement 4.3.4.3.1 shall be determined as follows. The item shall be rigged on a standard size airdrop platform. When there is overhang, the angle between the horizontal plane at the lower edge of the platform and the bottom of the overhang shall be measured. The extent (distance) of overhang shall be measured. When the overhang extends beyond 36 inches, an analysis of the dynamics of the ejection of the rigged item under the conditions in this requirement shall be provided insuring the feasibility that the rigged item can safely exit the aircraft. A confirmation airdrop test shall be satisfactorily conducted by the Government under the required parameters without aircraft or item damage.

5.3.4.3.2 Width verification

5.3.4.3.2.1 C-130 aircraft airdrop width verification. Compliance with requirement 4.3.4.3.2.1 shall be determined by measurement of the item width in the airdrop configuration.

5.3.4.3.2.2 C-141 aircraft airdrop width verification. Compliance with requirement 4.3.4.3.2.2 shall be determined by measurement of the item width in the airdrop configuration, and by calculation of the projected area in the lateral vertical plane of the rigged item. If the width exceeds 108 inches, an analysis shall be provided insuring the feasibility that the rigged item width can safely exit the aircraft and a confirmation airdrop test shall be conducted by the Government under the required parameters without incurring aircraft or item damage.

Source: https://assist.dla.mil -- Downloaded: 2016-12-11T01:38Z
Check the source to verify that this is the current version before use.

5.3.4.3.3 **Height verification.** Compliance with 4.3.4.3.3 shall be determined by measuring the maximum height of the item in its rigged configuration. The measurements are to be made from the bottom of the platform for longitudinal locations of the rigged item.

5.3.4.4 **LAPES dimensional limits verification.** Compliance with requirement 4.3.4.4 shall be in accordance with the verification of 5.3.4.3 for the C-130 aircraft.

5.3.5 **Planform loading verification.** Compliance with requirement 4.3.5 shall be determined by measuring or computing the largest projected area of the rigged item, by measuring the rigged weight, and by computing the planform loading.

5.3.6 **Impact survivability verification.** A simulated airdrop impact test detailed herein will establish the capability of the item to withstand the deceleration force and the above performance requirements for low velocity airdrop and LAPES. Compliance with requirement 4.3.6 shall not affect the compliance with requirements in 4.2.4.3 and 4.3.4. The requirement of surviving a 28.5 foot per second ground impact velocity specified in this requirement will be attained when the rigged item is free-dropped from a height of 12.7 feet. This height shall be measured from the lowest point on the bottom of the skid or airdrop platform upon which this item is rigged and the impact surface. The test shall be conducted using a concrete impact surface. The platform or skid must be approximately parallel to the impact surface prior to drop, and impact the ground at an angle from the horizontal of not greater than 2.5 degrees in any direction for the results to be valid. The item, after impact, shall meet the performance requirements of the applicable end item specification.

5.3.7 **Airdrop of ammunition/explosives verification.** Compliance with requirement 4.3.7 shall be determined by providing an analysis of the fragmentation/blast area insuring there is no possible hazard to the aircrews and aircraft. The analysis should consider the following:

Type of aircraft

Standard airdrop altitude

Standard airdrop airspeed

Complete malfunction of the parachute subsystem

Ground impact velocity of at least 150 feet per second

Detonation or function upon impact

Separation distance required between detonation point and aircraft to preclude any possibility of damage/injury from fragmentation or blast.

Source: https://assist.dla.mil -- Downloaded: 2016-12-11T01:38Z
Check the source to verify that this is the current version before use.

5.3.7.1 **LAPES of ammunition/explosives verification.** Compliance with requirement 4.3.7.1 shall be determined by conducting the malfunction drop simulation tests in MIL-STD-331, Test 117 for the following conditions.

Item oriented nose up

Item oriented nose down

Item oriented horizontally

The explosives and ammunition shall not detonate, deflagrate or function as a result of the airdrop test.

6. NOTES

6.1 **Data requirements.** When this standard is used in an acquisition which incorporates a DD Form 1423, Contract Data Requirements List (CDRL), the data requirements identified below shall be delivered as specified by an approved Data Item Description (DD Form 1664) and delivered in accordance with the approved DCRL incorporated into the contract. When the provisions of the DoD FAR clause on data requirements (currently DoD FAR Supplement 52.227-7031) are invoked and the DD Form 1423 is not used, the data specified below shall be delivered by the contractor in accordance with the contract or purchase order requirements. Deliverable data required by this standard is cited in the following paragraphs.

Paragraph No.	Data Requirement Title	Applicable DID No.	Options

(Data item descriptions related to this standard, and identified in section 6, will be approved and listed as such in DoD 500.19-L, Vol. II, AMSDL. Copies of data item descriptions required by the contractors in connection with specific acquisition functions should be obtained from the Naval Publications and Forms Center or as directed by the contracing officer.)

6.2 **Item characteristic data submission.** Under the provisions of joint regulation AFR 80-18, items which can be considered transportability problem items, i.e., those items which exceed any one of the conditions of paragraph A-9e of the regulation, must be referred to the ATTLA for air transportability evaluation and certification, if appropriate. The earliest possible submission of item characteristic data is essential to avoid design concepts which may result in denial of air transport certification or require expensive, time-consuming modifications.

Source: https://assist.dla.mil -- Downloaded: 2016-12-11T01:38Z
Check the source to verify that this is the current version before use.

6.3 **International standardization agreements.** Certain provisions of this standard are the subject of international standardization agreement (ASCC AIR STD 44/21 and NATO STANAG 3548TN). When amendment, revision, or cancellation of this standard is proposed which will modify the international agreement concerned, the preparing activity will take appropriate action through international standardization channels including departmental standardization offices to change the agreement or make other appropriate accommodations.

6.4 **Responsible engineering office.** The office responsible for development and technical maintenance of this standard is ASD/ENECA, Wright-Patterson AFB OH 45433; AUTOVON 785-6039, Commercial (513) 255-6039. The basic standard and appendix A are subject to the review and coordination process. Appendix B shall remain the sole responsibility of the REO and shall not be subject to the standard review and coordination procedures. Any information obtained relating to Government contracts must be obtained through contracting officers.

Custodian:
Air Force - 11

Preparing activity:
Air Force - 11

Project No. 1510-F009

Source: https://assist.dla.mil -- Downloaded: 2016-12-11T01:38Z
Check the source to verify that this is the current version before use.

APPENDIX A

DESIGNING FOR INTERNAL AERIAL DELIVERY

IN FIXED WING AIRCRAFT

HANDBOOK FOR

10. SCOPE

10.1 Scope. This appendix provides rationale, background criteria, guidance, lessons learned and instructions necessary to tailor sections 4 and 5 of the basic standard (MIL-STD-1791) for a specific application.

10.2 Purpose. This appendix provides information to assist product designers and the Government procuring activity in the use of MIL-STD-1791.

10.3 Use. This appendix is designed to assist the project engineer in applying MIL-STD-1791.

10.4 Format

10.4.1 Requirement/verification identity. Section 30 of this appendix parallels sections 4 and 5 of the basic standard. Paragraph titles and numbering are in the same sequence. Section 30 provides each requirement (section 4) and associated verification (standard test method or test procedure) (section 5) as stated in the basic standard. Both the requirement and the verification have sections for rationale, guidance, and lessons learned.

10.4.2 Requirement/verification package. Section 30 of this appendix has been so arranged that the requirement and associated verification is a complete package to permit addition to, or deletion from, the criteria as a single requirement. A requirement is not specified without an associated verification.

10.5 Responsible engineering office. The responsible engineering office (REO) for this appendix is ASD/ENECA, Wright-Patterson AFB OH 45433-6503. The individuals who have been assigned the responsibility for this handbook are Mr. Thomas Gardner, (Air Transport) and Mr. Patrick O'Brien (Airdrop), ASD/ENECA, Wright-Patterson AFB OH 45433-6503, Autovon 785-6039, commercial (513) 255-6039.

20. APPLICABLE DOCUMENTS

20.1 References. The documents referenced in this appendix are not intended to be applied contractually. Their primary purpose is to provide background information for the Government engineers responsible for developing the most appropriate performance values (filling in the blanks) for the requirements contained in the specification proper.

Source: https://assist.dla.mil -- Downloaded: 2016-12-11T01:38Z
Check the source to verify that this is the current version before use.

20.2 Avoidance of tiering. Should it be determined that the references contained in this appendix are necessary in writing an RFP or building a contract, excessive tiering shall be avoided by calling out only those portions of the reference which have direct applicability. It is a goal of the Department of Defense that the practice of referencing documents in their entirety be eliminated in order to reduce the tiering effect.

20.3 Government documents

Technical Orders

TO 1C-130A-9	Cargo Loading Manual, USAF Series C-130A, RC-130A, C-130B, C-130D, C-130E, C-130H, HC-130H, HC-130N, HC-103P, LC-130H Airplanes, USCG Series HC-130B Airplanes

Test Reports

ASD-TR-73-17	Final Report - Air Cargo Restraint Criteria
ASD-TR-76-30	Cargo Aircraft and Spacecraft Forward Restraint Criteria
AFFDL-TR-74-144	C-5A Cargo Deck Low-Frequency Vibration Environment
TRADOC TRMS 8-FO-164/ MAC Project 11-18-77	Final Joint US Army/US Air Force Test Report on the C-130 Bundle Delivery System (WEDGE)

Field Manuals/Technical Orders

FM 10-512/ TO 13C7-1-8	Airdrop of Supplies and Equipment: Rigging Typical Supply Loads
FM 10-553/ TO 13C7-18-41	Airdrop of Supplies and Equipment: Rigging Ammunition

Air Standardization Coordination Committee (ASCC)

AIR STD 44/21	Air Standard Criteria for the Design of Equipment Required to be Air Transported or Airdropped from Fixed Wing and Rotary Wing Transport Aircraft

North Atlantic Treaty Organization

STANAG 3548TN	Tiedown Fittings on Air Transported and Airdropped Equipment and Cargo Internally by Fixed Wing Aircraft

Source: https://assist.dla.mil -- Downloaded: 2016-12-11T01:38Z
Check the source to verify that this is the current version before use.

30. REQUIREMENTS AND VERIFICATIONS

4.1 Scope. The requirements stated in this section represent those areas which must be considered when designing items that will be air delivered in fixed wing cargo aircraft. Because of differences in the physical characteristics of items to be shipped, and the aircraft used to transport them, not all requirements will apply in every case. While some overlap of requirements may exist, this standard attempts to categorize the information presented by air transport topics versus airdrop topics. Requirements will be developed only for those military and CRAF aircraft whose prime mission is or would be cargo transport. Where aerial delivery in other cargo aircraft is anticipated, contact the ATTLA for design criteria and guidance. In general, similar geometry and structural considerations apply to all aircraft. Discrete differences between aircraft are dependent on the specific structural design involved.

Compliance with the requirements of this standard constitutes a portion of the DOD Engineering for Transportability program. Joint regulation AR 70-44/ OPNAVINST 4500.22B/AFR 80-18/MCO 4610.14C/DLAR 4500.25 designates the transportability agencies, promulgates policy, assigns responsibilities, and outlines procedures for conducting this program within the Army, Navy, Air Force, Marine Corps, and Defense Logistics Agency. This joint regulation requires early submission of data packages to the ATTLA for air transportability engineering review. The regulation detail proper procedural and item data requiremetns. Information on obtaining assistance and advice on air transport and airdrop matters is contained in section 6.

REQUIREMENT RATIONALE (4.1)

The information presented in this document is limited by practical considerations to those aircraft which have the greatest potential for transporting military cargo. The majority of air transport needs and all airdrop requirements have historically been satisfied by the three USAF prime mission cargo aircraft, the C-130, C-141B, and C-5. Because the CRAF fleet augments Air Force airlift capabilities, information regarding the most probable cargo hauling CRAF aircraft is also included. Most of the requirements presented are based directly on structural design limits specified by the aircraft manufacturer. Others are based on experience in transporting a wide range of equipment items.

REQUIREMENT GUIDANCE

In general, air transport and airdrop design requirements are based on the aircraft in which these operations are to be carried out. Thus, item design is satisfactory only when all pertinent criteria for each candidate aircraft are met. The criteria to be satisfied depend on the nature of the item to be air delivered. Not all criteria apply in all cases.

Source: https://assist.dla.mil -- Downloaded: 2016-12-11T01:38Z
Check the source to verify that this is the current version before use.

As an aid to the designer, a matrix of design criteria vs load type is presented at the end of this appendix. While every effort has been made to insure that the matrix is both comprehensive and accurate, unique situations often occur which may not be reflected in the table. Therefore, the matrix should be considered as an aid only.

REQUIREMENT LESSONS LEARNED

Addressing aerial delivery requirements early in the design stage can be helpful in identifying and resolving problem areas with the maximum lead time and at lowest cost. Contact with the Air Transportability Test Loading Agency (ATTLA) in accordance with the procedures established in joint regulation AFR 80-18/AR 70-44/OPNAVINST 4600.22B/MCO 4610.14C DLAR/4500.25, "DOD Engineering for Transportability," is encouraged to obtain assistance in identifying problem areas and potential solutions.

Good design practice leads to the maximum flexibility in the use of airlift resources. Where such design does not impair item mission requirements, item design should incorporate features which satisfy the most restrictive combination of criteria for those aircraft which are potential carriers. Thus, the non-availability of a particular aircraft does not eliminate the possibility of airlifting the item.

5.1 **Scope verification**. This paragraph does not require verification.

VERIFICATION RATIONALE (5.1)

The information presented in 4.1 is of a general nature. It essentially gives guidance which, experience has shown, can be beneficial in reducing the potential for "designed in" aerial delivery problems.

VERIFICATION GUIDANCE

Not applicable.

VERIFICATION LESSONS LEARNED

Not applicable.

4.2 **Air transport requirements**. This section presents those design requirements applicable to cargo items intended to be delivered point-to-point by conventional airlift modes. Because of the differences in the characteristics of items to be shipped and the aircraft used to transport them, not all requirements will apply in every case. A matrix has been developed (see appendix A, table 1) to aid the designer in determining which requirements apply to specific load types. Requirements pertinent to all modes of standard airdrop delivery are addressed in 4.3 through 4.3.6.1.

Source: https://assist.dla.mil -- Downloaded: 2016-12-11T01:38Z
Check the source to verify that this is the current version before use.

4.2.1 Item size and configuration. The design of items shall be such that they can be loaded aboard aircraft in their operational configuration whenever possible. To the extent possible, the design goal should be to qualify items for aerial delivery under the most restrictive combination of requirements. When necessary, sectionalization or partial disassembly of items may be performed as a means of achieving this goal, however, care must be taken not to exceed the user's organic capability to reassemble the item within a specified time period under field conditions. The dimensional and structural characteristics of candidate transport aircraft which establish the item design limits are summarized in the appendix for each aircraft.

REQUIREMENT RATIONALE (4.2.1)

The objective of this requirement is to influence equipment design, consistent with operational needs, to enhance the item's aerial delivery characteristics. Airlift resources are limited and using them most effectively is mandatory, particularly in contingency situations. Several design considerations impact the efficient use of both aircraft and personnel:

a. Equipment designed to be transported in its operational configuration eliminates the need for time-consuming sectionalization or partial disassembly.

b. Operational equipment can generally be on/offloaded with fewer problems and less need for supporting equipment.

c. Items whose design satisfies the "worst case" or most restrictive combinations of criteria have the greatest chance of being transported in periods of airlift shortfall. This results from the item having physical characteristics compatible with the widest range of available aircraft.

REQUIREMENT GUIDANCE

All cargo aircraft have structural limitations which affect the size and configuration of cargo items which can be safely loaded and air delivered. Limitations common to these aircraft include axle loads, axle spacing, roller conveyor loads, bulk cargo linear loadings, cargo compartment zone weight limits, and ramp crest angles, among others. The magnitude of these limits can vary widely between aircraft due to both aircraft design and operational factors. By designing equipment to the most restrictive combination of criteria, the chances of air delivering the item are greatly improved because the item will be eligible for movement in the widest possible range of available aircraft.

Reference to the appendices for the aircraft under consideration will provide the full range of data for each specific limiting factor. To insure the maximum flexibility in the use of airlift resources, equipment design should be based on the appropriate combination of the most restrictive criteria. For example, ramp cresting is most critical at the maximum ramp angle. This angle changes continuously during loading depending on aircraft cargo floor height which is a function of the on-board fuel and cargo load. Design should be based on the maximum possible floor height because all other floor locations will be less critical. The maximum axle flight load for the C-130 is

Source: https://assist.dla.mil -- Downloaded: 2016-12-11T01:38Z
Check the source to verify that this is the current version before use.

13,000 pounds at a 48-inch axle spacing, while the maximum for the C-141B is 10,000 pounds for standard size tires. Both of these cases assume a two-wheel axle configuration. Where a four-wheel axle (standard size tires) configuration is involved, a 20,000-pound axle limit applies in the C-141B at the required increase in axle spacing. Unlike the C-141B, the C-130 axle load limit is not increased by having more than two wheels. However, use of wide pased tires in lieu of standard size tires allows a 20,000 pound axle with a two-wheel configuration. Linear loading limits, applicable to tracked vehicles, sleeper shored loads, or bulk cargo loads, also vary widely depending on aircraft. Maximums vary from 36,000 pounds in a 40-inch length for the C-5A, to 6,000 pounds per linear foot for treadway loads in the C-130 to 3,000 pounds per linear foot for the C-141B treadway.

The examples cited are not intended to be comprehensive. They are meant to illustrate the nature and complexity of the load limits which must be considered. It is important to recognize the relationships existing between loads and their distribution. This will insure that aircraft structural limits are not exceeded and that flexibility of airlift operations is maximized because items are compatible with the widest range of available aircraft.

REQUIREMENT LESSONS LEARNED

Item sizing and configuration should be established with the following experience factors in mind:

a. Items specifically designed to be air delivered in their operational configuration often require no special support equipment for on/offloading. This is particularly important where these operations are carried out in austere locations where the availability of any support equipment is likely to be marginal.

b. Where item functional requirements prevent designing to the conditions of a. above, design alternatives should consider use of item sectionalization and/or reduction techniques. Caution must be exercised where sectionalization or reduction is implemented to assure that tool and support equipment requirements are within the organic capability of the using organization or are built into the items to be air delivered.

c. Only two auxiliary ramps are normally carried aboard military cargo aircraft. Where item design incorporates a tricycle wheel configuration, a fabricated auxiliary ramp must be provided to accommodate the centerline wheels during on/offloading. Centerline axles must not exceed axle loads for nontreadway applications.

d. The use of shoring should be avoided whenever possible. Wood shoring is very often unavailable in remote locations and its use is time-consuming as well as labor-intensive. Most importantly, each pound of shoring used reduces the aircraft payload by an equal amount. Support devices, designed to be an integral part of the equipment, can sometimes modify the need for shoring. Strategically positioned auxiliary landing gears, for instance, can eliminate the need for sleeper shoring.

e. Each aircraft has its unique structural limitations. Designing equipment for airlift in the smallest aircraft will not necessarily qualify the item for airlift in larger aircraft. Design should be based on the most restrictive combination of aircraft limits.

Source: https://assist.dla.mil -- Downloaded: 2016-12-11T01:38Z
Check the source to verify that this is the current version before use.

5.2 Air transport verification

5.2.1 Item size and configuration verification. Compliance with the requirements of 4.2.1 shall be met when it can be shown by measurement, engineering analysis, validation loading, or formal test loading that the item in its shipping configuration satisfies the appropriate requirements of subparagraph 4.2.1.1 through 4.2.1.9. Reference to table I at the end of this appendix will provide guidance as to which requirements apply to specific load types.

VERIFICATION RATIONALE (5.2.1)

Verification of these requirements can usually be accomplished through analysis of equipment dimensional and weight data. Comparison of the equipment in its shipping configuration with the characteristic loading envelope of the aircraft involved is the least costly and quickest method of determining the aerial delivery eligibility. Where critical clearances exist, or special loading equipment/procedures are involved, a validation or test loading may be required to verify the acceptability of the item for aerial delivery. This method of verification should be minimized because of the high cost of manpower and airlift resources required.

VERIFICATION GUIDANCE

Though some latitude is permissible in the configuration of equipment in order to facilitate an item's air transport eligibility, extreme care must be exercised so that unacceptable limitations are not imposed by certain configurations. While every reasonable effort should be made to ensure the air transportability of an item, the capability of the using unit to make the item operationally ready in the field is often the limiting factor. Special tools and sophisticated support equipment necessary for handling and reassembling the item will probably not be available at most overseas sites. The manpower necessary to perform these operations is also a major factor which must be considered. A third element of major importance is the time required to achieve operational readiness for the item after aerial delivery.

The data shown in the appendices for the particular aircraft provide the necessary information to assist the designer to set acceptable limits on item configuration. A review of the limiting factors for the various aircraft reveals a variation in aircraft structural capability which must be recognized in the design process.

Such factors as linear loading limits and axle weights vary widely between aircraft. Good design practice is that which satisfies the most restrictive combination of requirements. This will assure that the item is eligible for aerial delivery in the maximum number of available aircraft and enhances the probability of the item being airlifted.

VERIFICATION LESSONS LEARNED

Source: https://assist.dla.mil -- Downloaded: 2016-12-11T01:38Z
Check the source to verify that this is the current version before use.

4.2.1.1 Cargo compartment clearances. Equipment and cargo in its shipping configuration shall be sized such that it can be on/offloaded and air delivered without causing damage to the aircraft structure or to the equipment/cargo being delivered. Equipment and cargo to be air transported shall be designed such that a minimum clearance between the top/sides of the equipment and aircraft interior is maintained at all times during loading and flight. The design of such equipment shall conform to the clearance parameters specified in the appendix for the aircraft being considered.

REQUIREMENT RATIONALE (4.2.1.1)

The purpose of this requirement is to prevent damage to the aircraft during item on/offloading and ground or flight operations of the aircraft. The size and lack of precise handling capability of many equipment items results in poor maneuverability characteristics. Loading items into an aircraft requires sufficient clearance to allow for the difficulty of accurately maneuvering the item into and within the aircraft. Items restrained on-board aircraft will be subjected to accelerations during both ground and flight operations. These accelerations will result in movement of the item relative to the aircraft. This movement can be caused by deflection of the aircraft, deflection of tiedown chains or straps, deflection of the item itself, or any combination of these conditions.

REQUIREMENT GUIDANCE

The clearance available during loading influences both the amount of time necessary to load an item and the skill level required of the loading crew. The minimum clearance between the item and the aircraft structure during ground maneuvering and flight operations is influenced by the loading on tiedown devices, cargo item, and aircraft structure. These loads cause deflections to varying degrees and in varying directions. Nylon webbing tiedowns, for example, can elongate up to 20 percent under full load conditions. Full loading occurs only rarely. However, large deflections coupled with minimal clearances could result in the movement of an item to impact the aircraft structure. The dimensions shown in the appendices represent the cargo design limits for items to be transported in the designated aircraft. These values are derived by reducing the basic rectangular box size of the aircraft cargo compartment to account for the required overhead and side clearances. The C-5 has an irregular cargo compartment cross section which can be described as a rectangle topped by a trapezoid whose base is common with the upper long side of the rectangle. Height dimensions are measured from the load surface of the aircraft floor and do not include any provision for 463L pallets, roller conveyors, or shoring.

Designing to these limits will insure that items will meet the aircraft dimensional criteria for straight-in loading. Other aspects of air transportability, such as ramp cresting, projection clearances, axle and wheel loads, and floor and roller loading must be addressed separately to assure compliance with all requirements. Existing equipment which exceed these design limits may still be eligible for air transportability certification. However, a detailed review of the item's physical characteristics must be accomplished before this determination can be made. Special equipment and/or procedures may be required to permit air transport of certain equipment.

Source: https://assist.dla.mil -- Downloaded: 2016-12-11T01:38Z
Check the source to verify that this is the current version before use.

The dimensions of the Air Force prime mission cargo aircraft (C-130, C-141B, and C-5) and the long range international segment of the Civil Reserve Air Fleet (CRAF) are contained in appendix B.

REQUIREMENT LESSONS LEARNED

Equipment on-board the aircraft can decrease the available clearance for loading cargo items. The following situations should be considered:

a. If equipment is to be loaded on the roller conveyor system, the value for the cargo compartment height should be reduced by the height of the rollers and pallet, if used.

b. The C-130 rail restraint system is not removable from the aircraft and may limit available loading space.

5.2.1.1 Cargo compartment clearances verification. The requirements of 4.2.1.1 shall be met when it has been shown by measurement, engineering analysis, validation loading or formal test loading that the item in its shipping configuration satisfies the overhead and side clearance criteria specified in appendix B.

VERIFICATION RATIONALE (5.2.1.1)

The preferred method of verifying this requirement is by engineering analysis of the physical characteristics of the item. Experience has shown that this is the fastest, least costly procedure and can be used in the majority of cases. Where an item has such critical characteristics that analytical methods cannot positively determine if the item can be safely loaded and delivered, an actual test loading of the item may be necessary. Such loadings are the basis for the determination and formal documentation of loading and restraint procedures. Test loadings are expensive and are utilized only when absolutely necessary. Exceeding these limits does not necessarily prevent the item from being air delivered. However, such a situation does require a more critical analysis, often requires an expensive and time consuming test loading, and may require unusual loading procedures, the use of auxiliary support equipment, and highly skilled loading crews.

Cargo carried in an aircraft will be loaded by (1) straight-in loading over the horizontally positioned ramp from a truck or cargo loader, or (2) ramp loaded from the ground using the auxiliary loading ramps. Straight-in loading presents fewer cargo-aircraft interference problems, but requires ground support equipment which may not be readily available, particularly at austere off-load sites. Ramp loading, while less restrictive from a support equipment standpoint, is more critical with respect to cargo-aircraft interference.

Appendix B presents pictorial and graphic data on cargo compartment clearance and cargo-aircraft interference parameters. All load profiles must conform to dimensional envelope constraints. Additional limitations must be considered for ramp loaded items. These considerations include ramp cresting, parking overhang, loading overhang and projection limitations. Detailed knowledge of the dimensions and operational characteristics of equipment items is required

Source: https://assist.dla.mil -- Downloaded: 2016-12-11T01:38Z
Check the source to verify that this is the current version before use.

to determine the acceptability of an item for aerial delivery by use of the appendix B data.

VERIFICATION GUIDANCE

The determination of an item's dimensional acceptability for aerial delivery is made by comparing the item in its shipping configuration with the aircraft dimensional data presented in the appendices to this document. The data presented in these appendices represent design limits which, if not exceeded, should assure that the item can be transported in the aircraft under consideration.

VERIFICATION LESSONS LEARNED

The dimensional acceptability of an item must be determined with the item in its shipping configuration. In addition to the dimensions of the item itself, consideration must be given to any cargo compartment space taken up by such ancillary items as shoring, pallets, roller conveyors, if these are required.

Partial disassembly of equipment to meet the cargo compartment dimensional limits is an acceptable option only when the following conditions are met:

a. The item's reduced configuration must be such that it can be made operationally ready under field conditions within the specified mission ready response time using only the unit's organic capability.

b. The item in its reduced shipping configuration must not require the use of on/offloading support equipment which would not be available at the field site.

4.2.1.2 Projection limits. Vehicles and other wheeled cargo items which are to be loaded from the ground up the inclined aircraft ramp shall be loaded without use of approach shoring while maintaining the cargo compartment clearances of 4.2.1.1. Item height, overhang, and projection limits are established by the Cargo Projection Limits and the Vehicle Projection Limits charts shown in appendix B.

REQUIREMENT RATIONALE (4.2.1.2)

Mission requirements often necessitate loading general cargo and wheeled/tracked vehicles from the ground by winching or driving them directly into the aircraft cargo compartment. Any item loaded in this manner must be designed so that its height and length do not cause the item to contact the upper structural members of the aircraft or the undercarriage to contact the ramp crest area as shown in appendix B, figure 3. In addition, the item should not contact the ground.

REQUIREMENT GUIDANCE

The allowable item projection is determined by two factors: (1) the height of the load, and (2) the height of the cargo compartment floor at the hinge line of the ramp. The allowable projection is measured from the centerline of the ramp hinge.

Source: https://assist.dla.mil -- Downloaded: 2016-12-11T01:38Z
Check the source to verify that this is the current version before use.

Charts are used in determining the acceptable dimensions of vehicles/wheeled cargo whose inclined ramp loading may approach a projection limit. The Vehicle Projection Charts for each aircraft present height-projection limits for wheeled vehicles being on-loaded from the ground using the aircraft ramps. These charts give the critical vehicle height-projection values to determine the suitability of loading a given vehicle by this procedure. Vehicles should be backed into the aircraft whenever possible.

REQUIREMENT LESSONS LEARNED

Loading vehicles in the aircraft with their aft end facing forward permits more rapid offload. This is particularly important when offloading occurs in combat areas.

5.2.1.2 Projection limits verification. The requirements of 4.2.1.2 shall be met when it can be demonstrated that the item can be ground-loaded up the aircraft ramp. Successful loading shall consist of maintenance of cargo-to-aircraft clearances during loading and positioning for restraint without the use of approach shoring. Verification may be accomplished by measurement, engineering analysis, validation loading or formal test loading.

VERIFICATION RATIONALE (5.2.1.2)

Whenever possible, satisfaction of this requirement should be verified by comparing the item's critical dimensions with the limiting values shown on the appropriate charts for the aircraft involved. This is the fastest and least costly method of verification.

Alternate methods of establishing conformance with this requirement are (1) a demonstration loading using a scale mock-up of the aircraft ramp and cargo compartment envelope, (2) a formal test loading involving the actual aircraft, or (3) a validation loading to occur at the time of the first actual airlift of the item.

Experience has shown that the analysis method of verification can be applied in most cases. Formal test loadings are required only in extremely critical situations and must be recommended as necessary by the ATTLA before they will be approved. Validation loadings at the time of first shipment are commonly used to establish loading qualifications without incurring the cost involved in a formal test loading.

VERIFICATION GUIDANCE

Each chart has instructions to aid the designer in determining analytically if a proposed design or actual item qualifies for ground loading up the aircraft ramp. In some cases, the item's critical dimensions may so closely approach the limiting values that an analytical judgment may not be possible. In all cases, the final determination of an item's certification in this requirement area rests with the ATTLA, who will determine if any form of loading demonstration is required.

Source: https://assist.dla.mil -- Downloaded: 2016-12-11T01:38Z
Check the source to verify that this is the current version before use.

VERIFICATION LESSONS LEARNED

Because of the scale involved, graphical determination of an item's up-the-ramp loadability cannot be made with extreme precision.

Except for very critical items, formal test loading is seldom needed to determine an item's qualifications.

4.2.1.3 **Vehicle overhang**. Item design should minimize front and rear overhang and maximize ground clearance. Overhang should be limited such that interference between the item and the ramp or ground is avoided during inclined ramp loading procedures. Vehicles which are to be loaded from the ground up the inclined aircraft ramp shall be loaded without the use of approach shoring while maintaining clearance at the ground as well as at the ramp. Vehicle wheelbase, overhang, and ground clearance limitations are established by the Loading Overhang Limits charts presented in appendix B.

REQUIREMENT RATIONALE (4.2.1.3)

Vehicles which have structures extending long distances past the front or rear axles may have difficulty in loading up the inclined ramp from the ground. This is especially critical on vehicles which have low ground clearance. The potential problem involves interference between the overhanging portion of the vehicle and either the aircraft ramp or the ground (see appendix B, figure 3). The Loading Overhang Limit charts for each aircraft present the relationship between the design factors pertinent to this situation. Item design should be based on the assumption that the aircraft floor is at its maximum height.

A secondary overhang consideration involves the efficient use of the aircraft cargo compartment. By parking a vehicle near the aft end of the compartment, a portion of the vehicle overhang may project into the area above the ramp provided it does not extend so far aft that it contacts the ramp in its retracted position. The Parking Overhang Limit chart shows the relationship between vehicle overhang and vehicle floor clearance.

REQUIREMENT GUIDANCE

See guidance for 4.2.1.2.

REQUIREMENT LESSONS LEARNED

See lessons learned for 4.2.1.2.

Source: https://assist.dla.mil -- Downloaded: 2016-12-11T01:38Z
Check the source to verify that this is the current version before use.

5.2.1.3 **Vehicle overhang verification.** Conformance with 4.2.1.3 shall be met when it can be shown that the vehicle can be ground-loaded up the aircraft ramp without striking either the ramp or the ground. Approach shoring shall not be used to assist the loading process. Compliance may be shown by measurement, engineering analysis, validation loading, or formal test loading.

VERIFICATION RATIONALE (5.2.1.3)

See rationale for 5.2.1.2.

VERIFICATION GUIDANCE

See guidance for 5.2.1.2.

VERIFICATION LESSONS LEARNED

See lessons learned for 5.2.1.2.

4.2.1.4 **Ramp cresting.** Wheeled/tracked vehicles and other cargo to be loaded from the ground must be able to negotiate the crest of the aircraft inclined ramp without damage to the aircraft or the cargo item. In addition to meeting the requirements of 4.2.4.5, wheeled/tracked vehicles and other cargo items to be loaded from the ground up the inclined aircraft ramp shall be able to negotiate the crest formed by the ramp and aircraft cargo floor with the cargo floor at its highest position above ground level.

REQUIREMENT RATIONALE (4.2.1.4)

The most critical vehicle-to-structure clearance situation often occurs when the vehicle crests the ramp at the hinge line. This situation is more acute for vehicles having low ground clearances and long wheel bases. The Ramp Crest Limit charts in the appendices for each aircraft show the relationship between the vehicle wheelbase, vehicle ground clearance, and aircraft cargo floor height. Aircraft cargo floor height is only predictable within a given range because of the variable factors affecting it. Therefore, item design should always be based on worst case conditions; i.e., with the cargo floor at its maximum height.

REQUIREMENT GUIDANCE

The Ramp Crest Limit charts are based on a vehicle having its maximum ground clearance at mid-wheelbase. While this is the case with many vehicles, it is becoming increasingly more common that vehicles such as vans are being designed with auxiliary equipment stowed beneath the structural framework. In these cases the critical ground clearance may not be at mid-wheelbase. In general, the closer the minimum ground clearance is located to the wheels, the less of a problem ramp cresting becomes.

REQUIREMENT LESSONS LEARNED

Source: https://assist.dla.mil -- Downloaded: 2016-12-11T01:38Z
Check the source to verify that this is the current version before use.

5.2.1.4 Ramp cresting verification. Dual verifications must be met to totally satisfy the requirements of 4.2.1.4. The ramp hinge limit requirements of 4.2.4.5 must be met concurrently with the clearance requirements of 4.2.1.4. The verification for 4.2.4.5 requirements are addressed in 4.2.4.5. Compliance with the requirements of 4.2.1.4 shall be met when it can be shown by measurement, engineering analysis, validation loading or formal test loading that the vehicle can be loaded from the ground without striking the ramp hinge. Approach shoring will not be used to assist the loading process.

VERIFICATION RATIONALE (5.2.1.4)

See rationale for 5.2.1.2.

VERIFICATION GUIDANCE

In addition to the guidance of 5.2.1.2, it should be remembered that the Ramp Cresting Limit charts are based on the vehicle maximum ground clearance occurring at mid-wheelbase. Where this location differs from the mid-point, this must be considered in analytically determining if the vehicle meets the ramp cresting requirements.

VERIFICATION LESSONS LEARNED

In addition to the lessons learned of 5.2.1.2, experience has shown the closer the minimum ground clearance point is to the wheels, the less of a problem ramp cresting becomes.

4.2.1.5 Emergency access. The configuration and location of equipment and cargo secured in military aircraft for air transport or airdrop shall be such that a crew member wearing flight gear may pass from the front to the rear of the aircraft. On military aircraft without walkways (C-141B and C-5 have walk-ways) in the cargo compartment, a minimum clear space on the left-hand side of the aircraft, when facing forward, of 14 inches wide by 72 inches high or 30 inches wide by 48 inches high, shall be maintained at all times. On aircraft with walkways, these areas shall be kept free of all cargo to allow passage of crew members. Emergency access requirements for CRAF aircraft shall be satisfied in accordance with Federal Aviation Regulation, Part 25.

REQUIREMENT RATIONALE (4.2.1.5)

On military aircraft, a requirement exists for an aisle in the cargo compartment for crew transit from the flight station to the rear of the aircraft for fire fighting, checking and resecuring loads, and scanning engines or landing gear. Certain aircraft, such as the C-141B and C-5 have walkways. While these walkways satisfy this requirement, they must be kept clear at all times of cargo or protrusions. On aircraft such as the C-130, a minimum clear space on the left-hand side when facing forward must exist at all times.

REQUIREMENT GUIDANCE

Appendix B, figure 42 shows a cross-section of the C-130 fuselage and highlights two clear space options relative to the cargo compartment envelope.

Source: https://assist.dla.mil -- Downloaded: 2016-12-11T01:38Z
Check the source to verify that this is the current version before use.

Safety aisle "A" is 14 inches wide by 72 inches high, while safety aisle "B" is 30 inches wide by 48 inches high. Experience has shown that the "A" space will permit a crew member to walk with a slight crouch through the cargo compartment. Similarly, the "B" space is adequate to allow a crew member to crawl atop the cargo. The clear spaces are shown in the extreme upper left position of the cargo envelope. This utilizes the maximum cargo widths and heights in this area while still accommodating a walking or crawling man. Other locations of the clear spaces may be acceptable, as are combinations of walkways and crawlways, as long as a continuous passageway exists on the left side of the aircraft. In designing to meet these criteria, remember that the basic requirement is for a man wearing a parachute to be able to get from the forward end of the aircraft to the rear troop doors.

5.2.1.5 **Emergency access verification**. The requirements of 4.2.1.5 shall be met when the height and width of the clear areas, with the cargo restrained in position aboard the aircraft, equals or exceeds the values shown in appendix B, figure 42 or Federal Aviation Regulation, Part 25. An alternate method of verification involves a demonstration that a flight crewmember in appropriate gear can negotiate passage from front to rear of the aircraft with the cargo restrained in flight position.

VERIFICATION RATIONALE (5.2.1.5)

In the majority of cases, knowledge of the item's dimensions is adequate to make a determination of the acceptability of the clear space. This is the quickest and least costly method of verification. Where complex load configurations are involved, or where multiple units comprise the load, a demonstration of crew member access may be necessary. Because of the time and manpower involved, this verification method should be avoided whenever possible.

VERIFICATION GUIDANCE

The configuration of cargo loads seldom will present a uniform rectangular aisleway. Judgement must be used in many cases in evaluating the acceptability of a load where clear spaces vary from the requirement criteria. Many individual items must be evaluated in the absence of knowledge of the total aircraft load configuration. The overall load configuration can have an impact on clear space available at an individual item location. Experience has shown, however, that sufficient flexibility in load planning generally exists such that, if an individual item meets access criteria, it can be located in the overall load without adversely affecting the emergency access path. The ATTLA is available to provide advice in this area.

VERIFICATION LESSONS LEARNED

Source: https://assist.dla.mil -- Downloaded: 2016-12-11T01:38Z
Check the source to verify that this is the current version before use.

4.2.1.6 Palletized cargo. Where equipment can be air delivered secured to a pallet that locks into an integral aircraft rail system, the entire unit load shall meet the requirements of 4.2.3.2. Where such equipment can be secured to the pallet with MIL-N-27444 nets and straps, the equipment need not meet the requirements of 4.2.3.2. All other equipment shall be provided with tiedown provisions in accordance with 4.2.3.1. In all cases, palletized loads shall not exceed aircraft roller load limits specified in appendix B.

REQUIREMENT RATIONALE (4.2.1.6)

The standard 463L pallet can be used as a base on which to position and restrain a unitized load of general cargo as well as larger cargo items such as vehicles. The 463L pallet is described in appendix B, 30.1.7.4.1.

When locked into an integral military aircraft rail system, the 463L pallet, and its companion MIL-N-27444 nets and straps, constitutes a system capable of restraining a uniformly distributed 10,000-pound load of general cargo against the acceleration forces of 4.2.3.2. General cargo conforming to the load configuration of MIL-N-27444 and restrained by the 463L pallet/net system meets all air transportability restraint criteria.

Where the nature of the load is such that it cannot be restrained to the 463L pallet with MIL-N-27444 nets, specifically tailored tiedown procedures using adequate attachment points and MIL-T-25959 or MIL-T-27260 tiedown devices must be used.

463L pallets are load-limited in two respects. First, concentrated loads on the surface of these devices can cause puncturing of the pallet skin. Secondly, loads carried by these devices are transmitted to and reacted by the aircraft rollers which also have structural limits. Thus, the cargo must not impose loads which exceed either the roller limits shown in appendix B or the pallet puncture load limits of 250 pounds per square inch (psi).

REQUIREMENT GUIDANCE

To determine if a palletized object is suitable for air transport, it is necessary to compute the loads which will be imposed on the rollers of the aircraft under consideration. This loading is a function of the object's contact length on the pallet which determines the number of roller stations contacted. Appendix B, figure 43 provides guidance in this area.

Two important considerations must be kept in mind when determining the acceptability of pallet loads. First, no load spreading capability is assumed to exist with the 463L pallet. Therefore, to determine the longitudinal roller loads for palletized cargo, use only the object's actual contact length per longitudinal contact station on the pallet. If load spreading is necessary to meet roller load limits, wood shoring may be used employing the principle of geometric weight distribution. Refer to appendix B, 30.1.3 for details on the use of shoring. The second factor is the number of roller conveyors (longitudinal trays of rollers) contacted. Differing roller load limits apply depending on the number of conveyors under load.

Source: https://assist.dla.mil -- Downloaded: 2016-12-11T01:38Z
Check the source to verify that this is the current version before use.

The procedures for computing roller loads are detailed in appendix B.

REQUIREMENT LESSONS LEARNED

5.2.1.6 **Palletized cargo verification.** The requirements of 4.2.1.6 shall be met when engineering analysis or actual testing shows that the restraint load satisfies all restraint criteria and that the load in its palletized configuration does not exceed roller load limits for the aircraft concerned. Where MIL-N-27444 nets cannot be used to provide item restraint, the analysis or testing must verify the adequacy of the attachment devices under the worst case tiedown pattern(s) using MIL-T-25959 or MIL-T-27260 tiedown devices. The MIL-T-27260 tiedown devices are qualified at their rated capacities and need not be further tested to satisfy the requirements of 4.2.1.6.

VERIFICATION RATIONALE (5.2.1.6)

Except where complex weight distributions are involved, analytical means have proved adequate to verify the acceptability of palletized loads. In those cases where complex loading exists, instrumented tests may be necessary to assure that the forces imposed on the roller system or the pallets themselves do not exceed established limits.

VERIFICATION GUIDANCE

The basic data required to compute the loads on the aircraft roller system are the dimensions of the base of the cargo item and the item's weight distribution. Both footprint pressure and load placement on the pallet must be considered. Footprint pressure must not exceed 250 psi. Load placement directly affects the loading imposed on the rollers. Analysis will permit determination of the number of roller conveyors under load as well as the number of roller stations contacted.

VERIFICATION LESSONS LEARNED

4.2.1.7 **Containers/shelters, and vans.** Where equipment can be secured within an enclosed container/shelter or van, the entire unit load shall meet the requirements of 4.2.3.2 and 4.2.5.2. Where palletization is used as a means of loading such containerized cargo, the additional requirements of 4.2.1.6 shall apply. Where other loading or placement configurations are used, the appropriate requirements (i.e., axle/wheel loads, tongue loads, floor loads, etc.) for that configuration shall be observed.

REQUIREMENT RATIONALE (4.2.1.7)

The use of large commercial containers for the transport of general cargo is increasing rapidly. Additionally, shelters designed to container standards

Source: https://assist.dla.mil -- Downloaded: 2016-12-11T01:38Z
Check the source to verify that this is the current version before use.

are being used to house equipment for use as field test and repair facilities. These containers and shelters are designed to international standards which are based principally on forces experienced in the surface mode of transport.

As a result, very few of these containers/shelters possess the inherent strength to provide the required air transport cargo restraint except in the vertical downward direction. Vans of all descriptions are also used for similar functions and probably possess even less restraint capability than the containers/shelters.

General cargo and other equipment items which can be transported in these devices are subjected to the same acceleration forces as the containing device. Restraint of the containing device itself does not necessarily assure adequate restraint of the cargo items. Unless these cargo items are independently restrained to appropriate levels, they become damaged under the influence of flight loads or may, at the extreme, deform the container walls and cause damage to the aircraft. It is this extreme case which the restraint criteria seeks to prevent.

REQUIREMENT GUIDANCE

The primary structural components of containers and shelters are the floor structure, the upper and lower longitudinal side rails, the upper and lower end rails, and the four vertical corner posts. These components form the framework of the container and provide the basic strength to the container. The walls, door, and roof structures are of variable and considerably reduced strength which is dependent on design and materials of construction. Thus, internal cargo restraint must be applied in such a way that the load path terminates at the floor, corner posts, or side or end rails.

External restraint methods, while meeting the safety of flight requirements, are less desirable from several standpoints. Such procedures do not constrain the cargo within the container. Thus, cargo damage may result from flight loads even though no aircraft damage is sustained. Additionally, these procedures are cumbersome to apply, usually require resources which may not always be available without preplanning, and are time and labor intensive.

REQUIREMENT LESSONS LEARNED

5.2.1.7 Containers/shelters and vans verification. Multiple requirements must be met to show compliance with 4.2.1.7. The nature of the load configuration determines which of several requirements apply in a given instance. All loads must conform to the verification procedures of 5.2.3.2 and 5.2.5.2. Where the containers/shelters or vans are palletized for loading and flight, the additional verification of 5.2.1.6 also applies.

VERIFICATION RATIONALE (5.2.1.7)

Source: https://assist.dla.mil -- Downloaded: 2016-12-11T01:38Z
Check the source to verify that this is the current version before use.

For most loads, knowledge of the load geometry and weight distribution will permit analytical verification of this requirement. Complex load configurations may require physical testing to determine the loads imposed on the roller system.

VERIFICATION GUIDANCE

Roller load limits vary widely between aircraft. In order to assure interchangeability of palletized loads between aircraft, where other factors permit this flexibility, it is necessary to verify that such loads meet the most restrictive of the aircraft criteria. Both the longitudinal roller contact length and the number of lateral rollers contacted are factors which must be acceptable when two or more lateral rollers are contacted. If shoring is required to meet load restrictions, the geometric weight distribution principle applies to the shoring only. The 463L pallet is assumed to exhibit no load spreading capability. Both puncture load limits and roller load criteria must be satisfied to qualify palletized loads for airlift.

VERIFICATION LESSONS LEARNED

4.2.1.8 463L system capatibility. Equipment that is to be transported on its own base or which incorporates an integral pallet base shall be designed to be compatible with the 463L air cargo handling system. Smaller items which can be palletized should be designed to take maximum advantage of the weight and cube capability of the HCU-6/E pallet. Equipment which can be air transported on its own base or on an integral pallet base shall be designed to meet the following:

a. The pallet/base side lip shall be designed to and meet the requirements of MIL-P-27443.

b. Unless otherwise specified in the order or contract, the bottom of the pallet/base shall be capable of traversing all types of aircraft and cargo loader roller conveyors as shown in appendix B, figure 5.

c. The unit load shall withstand all loadings as imposed by all sets of roller conveyors unless particular sets are specified.

d. The pallet width for the C-130, C-141B, and C-5 aircraft shall be $108^{+0}_{-1/8}$ inches.

REQUIREMENT RATIONALE (4.2.1.8)

Often it is advantageous and, in some cases, necessary to design equipment for air transport with an integral base or pallet. The interface with the aircraft system requires special design considerations. The integral base/pallet design must be designed to be compatible with the aircraft and materials handling equipment roller conveyor systems, but depending upon the specific

Source: https://assist.dla.mil -- Downloaded: 2016-12-11T01:38Z
Check the source to verify that this is the current version before use.

equipment design, it may or may not be compatible with the aircraft guide rails and restraint lock systems. A design which incorporates 463L system compatibility offers increased potential for aerial delivery. At the same time it imposes different requirements which must be satisfied.

REQUIREMENT GUIDANCE

A flat bottom is highly desirable, but is only required in the areas and directions where the pallet will contact the rollers and/or ball casters of the aircraft and materials handling equipment. Skids may be used on pallet or equipment bottoms if they are located and sized to mate with the roller conveyor systems and are strong enough to withstand the flight load requirements. The pallet/base must also be capable of withstanding the forces created by the item teetering on a single set of rollers.

Equipment with an integral base/pallet that must mate with the aircraft guide rail and restraint lock system must have a lip along the side that interfaces with the aircraft systems. Refer to appendix B, figure 26 for illustration of aircraft rail/pallet interface. Equipment/pallets that do not mate with the aircraft restraint lock system must have tiedown provisions in accordance with 4.3.3.1 so that it can be secured in the aircraft to the required restraint levels by means of approved tiedown devices.

REQUIREMENT LESSONS LEARNED

For efficient use of the aircraft, the base/pallet should lock into the aircraft rail system. This will permit the equipment to be secured to the pallet for the required restraint and then the pallet/equipment assembly can be locked into the aircraft to the required restraint level. However, long (exceeding 30 feet) and/or heavy (exceeding 30,000 pounds) equipment items are difficult to align with the aircraft guide rail system.

Load distribution between the pallet and the roller conveyor systems is critical in the design of specialized pallets and/or integral base designs. Skids and flat bottom pallets must have continuous strength in the areas that interface with the roller conveyor systems. Sometimes, due to misalignment between cargo loaders and the aircraft, the roller conveyor systems are not coplanar; therefore, a pallet/base can contact only a single set of rollers during the transition or cresting process.

The underside of the pallet or skid base must be as flat as possible and supported adequately to avoid a "washboard" or "wavy" shape while traversing the roller system. In addition, there should be no sharp edges, discontinuities, or projections which could damage the rollers. The leading and trailing edges of the pallet or skids should be beveled at a 45 degree angle or be rounded to ease the transition as the edge moves onto the rollers.

Source: https://assist.dla.mil -- Downloaded: 2016-12-11T01:38Z
Check the source to verify that this is the current version before use.

5.2.1.8 **463L system compatibility verification**. Compliance with the requirement in 4.2.1.8 shall be verified by methods appropriate to the particular design involved. Where such design incorporates features of the 463L pallet, verification in accordance with section 4 or MIL-P-27443 is required. All cargo items shall meet the verification criteria of 5.2.3.2. For skidded loads and loads having less than full width bases it shall be shown that such loads can traverse the roller conveyors of the specified aircraft and appropriate ground handling equipment. Analytical proof based on roller conveyor capabilities and dimensions is the preferred method of verification. Validation or test loadings may be required depending on the specific design involved. The ATTLA will make the determination of need for such loadings.

VERIFICATION RATIONALE (5.2.1.8)

The method of requirements verification depends to a large extent on the final item configuration. For instance, with a full pallet base, compliance with the appropriate MIL-P-27443 requirements is adequate verification for this requirement. In other designs, analysis of the item from both dimensional and structural standpoints may be all that is required to prove acceptability. Where large or heavy items or otherwise complex loading situations are involved, formal test loadings or other demonstration techniques may be required.

VERIFICATION GUIDANCE

As in all verification procedures, the method chosen should be the simplest one which will provide assurance that the requirements have been met. Judgement as to the proper procedure must be made on a case-by-case basis. The assistance of the ATTLA is available to both the program office and the designer to determine the feasibility of proposed designs and appropriate verification procedures. In many cases, the experience the ATTLA has had with similar designs may prove valuable in avoiding problem areas and may improve item characteristics. The earliest possible contact with the ATTLA is advised.

VERIFICATION LESSONS LEARNED

The increasing emphasis on on/offloading items with minimal MHE has made this requirement more generally applicable. Where the base/pallet is fully compatible with the 463L roller conveyor system (including restraint provisions), the entire unit load should be structurally capable of being restrained by the rail restraint devices.

Unless the base of the item can be maintained coplanar with the surface of the aircraft and MHE rollers during on/offloading, roller overloading and possible failure may result. Intensive consideration of the method of handling the item during on/offloading should be a part of any decision process relative to 463L system compatibility.

On/offloading conditions at remote sites should always be considered to be the limiting factor in judging the acceptability of items in terms of 463L compatibility.

Source: https://assist.dla.mil -- Downloaded: 2016-12-11T01:38Z
Check the source to verify that this is the current version before use.

4.2.1.9 **Special tools and transportability equipment.** The need for specialized tools and ground support equipment to prepare and load/offload cargo items shall be avoided to the maximum extent consistent with mission requirements. Where such tools/equipment are required, the type and quantity shall be identified and reported to the procuring activity or program office. Use of special tools and support equipment shall not degrade the user's mission capability, involve equipment not normally available at the deployment site, or compromise the safety of operating personnel.

REQUIREMENT RATIONALE (4.2.1.9)

In most cases, items requiring aerial delivery capabilities are destined for rapid deployment in austere environments. Under these conditions little, if any, support equipment is likely to be available to assist in offloading reassembly operations. Additionally, mission readiness requirements may not allow time for any but minor item reassembly operations. Special tools, even those which are small and easily carried with the item, represent a major problem in remote areas if replacement is needed because of loss or damage. While total avoidance of special tools may not be possible, requiring their use must be minimized.

REQUIREMENT GUIDANCE

Item design should be tailored to permit loading and air movement of the item in its operational configuration whenever possible. This not only eliminates the time and effort to prepare the item for transport at the origin and restore it to operational readiness at the destination, but also eliminates the need for supporting equipment and special tools at both locations. The designer should keep in mind that field conditions are vastly different than shop conditions both in terms of manpower and facilities availability. Design should be predicated on the worst case situation which is the combat field environment. While air transport of items in their operational configuration is a desired goal, many situations exist where this cannot be accomplished. In these cases every effort should be made to eliminate the need for extensive item modification to make it ready for aerial delivery. In many cases program requirements may limit the amount of time and resources available to prepare the item for operation once it is delivered to the user.

REQUIREMENT LESSONS LEARNED

The more special tools and equipment necessary to support an item, the greater the potential for malfunction and loss of use of that item.

Mission requirements often severely limit the allowable time to make equipment operationally ready from its air transport configuration. A factor which is easily overlooked is that combat field conditions can considerably extend the time required to perform a given operation.

Source: https://assist.dla.mil -- Downloaded: 2016-12-11T01:38Z
Check the source to verify that this is the current version before use.

5.2.1.9 **Special tools and transportability equipment verification.** Demonstration of acceptance procedures and elapsed times shall be used as the verification criteria for this requirement. Acceptable procedures shall be specified by the user/program office based on mission requirements. Where such procedures impact on aircraft loading/unloading or flight safety they shall have the concurrence of the ATTLA. Acceptance of procedures includes acceptance of the type and quantity of special tools and equipment required to perform the procedure.

VERIFICATION RATIONALE (5.2.1.9)

Verification of the acceptability of proposed procedures is seldom entirely objective. However, because mission-ready status can be defined in terms of elapsed time from aircraft offload, these criteria are reasonable to establish if make-ready procedures are satisfactory. The acceptability of special tools and equipment is often a matter of subjective judgment. Guidelines must be established by the program office on a case by case basis. Comparison of the characteristics of the special tools/equipment with the established criteria shall be the determinant of whether these items are acceptable.

VERIFICATION GUIDANCE

Where this requirement applies, the program office responsible for the equipment development will specify acceptance criteria. Planning factors for various operational scenarios will determine the allowable time and other conditions for making the equipment ready for use once it is air delivered to the user. The skill level of the personnel readying the equipment must be considered in verifying the satisfaction of this requirement. In most cases these personnel will be unskilled and unfamiliar with the items requiring assembly/disassembly.

VERIFICATION LESSONS LEARNED

Demonstrations to prove the acceptability of proposed special tools and procedures may not be representative of actual user circumstances. Care should be taken to make demonstrations as realistic as possible. Factors which must be considered include the user's skill level, training, familiarity with both equipment and procedures, and the physical and environmental conditions under which the operations must take place.

4.2.2 **Item handling provisions.** To facilitate handling, the equipment shall be as compact and lightweight as practical; however, reliability and maintainability shall not be substantially impaired in meeting this requirement. Any projected design compromise for the sake of air transportability shall be brought to the attention of the procuring activity. It shall be possible to load the equipment into the aircraft and readily position the equipment without damage to the aircraft structure using a minimum amount of handling equipment.

REQUIREMENT RATIONALE (4.2.2)

Source: https://assist.dla.mil -- Downloaded: 2016-12-11T01:38Z
Check the source to verify that this is the current version before use.

The basis for this requirement is the limited availability of airlift resources, support equipment, and highly skilled loading personnel. As with any transport vehicle, cargo aircraft are only productive when moving payload. Item handling characteristics can greatly affect aircraft turnaround time. When an item can be loaded and unloaded quickly, increased aircraft productivity can be achieved by decreasing turnaround time.

The importance of item handling characteristics is increased when support equipment and manpower requirements are considered. Use of specialized handling equipment should be avoided because this establishes the need for such equipment at both on/offload and offload sites. While this special equipment may be available in the CONUS, it very likely would not be on hand at remote overseas sites. Reliance on such equipment could result in the necessity to use scarce airlift resources to transport special handling equipment along with the item it supports.

The degree of skill necessary to load an item usually varies directly with the difficulty of maneuvering the item. The manueverability of an item is a factor not only of handling characteristics but of size, weight, and configuration.

REQUIREMENT GUIDANCE

Awareness of the limitations on the availability of cargo handling equipment and skilled loading personnel is a key element in good item design for aerial delivery. Experience has shown that many items incorporate self-limiting handling characteristics because logistics supportability requirements were not integrated with functional requirements during the item design phase. In many cases, design modifications to enhance aerial delivery characteristics would not have adversely affected the item's functional characteristics. It should be emphasized, however, that item design which facilitates handling at the expense of mission capability and performance should be avoided.

Support equipment availability differs greatly between CONUS bases and those overseas, particularly those in remote locations. The design should assume that only minimal equipment will be available to load and position items in aircraft. Additionally, it should be assumed that highly skilled loading crews will not be available. Because of the high probability of these circumstances occurring, equipment design should incorporate features which will permit safe ground loading and positioning of the item within the aircraft with the use of common handling equipment and unskilled personnel. The safety of personnel and equipment must be the primary concern.

Equipment design should incorporate as many weight and space saving features as practical. This will enhance the item's handling characteristics as well as improve aircraft utilization through higher density loading. Weight reduction may be accomplished through the use of advanced structural concepts and/or engineering materials. Use of sectionalization or reduction techniques may be helpful in overcoming weight or space limitations. Use of these techniques must not adversely affect mission capability or readiness response time.

Source: https://assist.dla.mil -- Downloaded: 2016-12-11T01:38Z
Check the source to verify that this is the current version before use.

Loading equipment from the ground is a preferred method because it generally requires a minimum of support equipment. It is important to remember that this method involves moving the equipment up relatively steep, narrow ramps into an enclosed space where clearances often are minimal. The handling characteristics of the item become extremely important in this situation as does the skill of the operator. Articulated vehicles and those with tracked configurations are particularly critical because of their relatively poor maneuverability characteristics.

REQUIREMENT LESSONS LEARNED

An item's handling characteristics have a significant effect on efficient aircraft utilization and the need for support equipment and personnel. Lessons learned which should be considered in this area include the following:

a. The earlier in the acquisition cycle that air transport requirements are identified, the better are the chances of being able to design items to satisfy both operational and aerial delivery criteria.

b. An item's handling characteristics can sometimes be improved by using sectionalization or reduction techniques. The extent to which these procedures can be employed is limited by the user's organic capability to make the item mission ready within the allowable time period.

c. While it may seem self-evident, an important thing to remember is that it does little good to design the maximum transportability features into an item if those features materially degrade the item's required mission performance. Proposed item designs should be brought to the attention of the program office for an evaluation of handling features for their impact on item performance.

d. Mobile equipment design should stress handling features which permit loading from ground level using unskilled operators and not requiring ground support equipment. Such equipment is not likely to be available at remote sites and would possibly require additional airlift support to position at the required site. A chronic shortage of skilled personnel exists and is particularly acute in periods of high airlift demand. However, the feasibility of handling items with minimal handling equipment must be established.

5.2.2 **Item handling provisions verification.** The nature of the requirements imposed by 4.2.2 does not lend them to strict objective verification. There are no absolute standards to be met, but rather design goals to be approached within the framework of mission requirements. It is important that during item development the designer consider certain factors unique to the military operational environment. Such considerations must include operating in very austere conditions, frequent lack of adequate support equipment, the need for rapid aircraft turnaround times, especially in combat areas, and human engineering factors including the skill level of personnel operating the equipment during on/offloading. Acceptability of handling provisions is frequently based on factors similar to those in 5.2.1.9.

Source: https://assist.dla.mil -- Downloaded: 2016-12-11T01:38Z
Check the source to verify that this is the current version before use.

VERIFICATION RATIONALE (5.2.2)

Certain factors affecting an item's handling characteristics can only be subjectively evaluated. Weight savings and compactness, for instance, are not absolutes but are often subject to changing technology. The product improvement evaluation process can often be useful in identifying weight and cube reduction possibilities which may exist in the prototype design.
The handling characteristics of equipment items can very often be evaluated in simple level-ground maneuverability tests. It is important to remember that loading from ground level involves several additional complicating factors. These include backing up narrow ramps into a limited clearance compartment under marginal visibility conditions. A simple mock-up of the aircraft ramp and cargo compartment can be a useful device to assist in the evaluation of the handling characteristics of the more critical items.

The ultimate verification procedure is, of course, a test loading using an actual aircraft. Because of the costs involved, this procedure should be used only when it can be thoroughly justified.

VERIFICATION GUIDANCE

Analytical verification of an item's handling characteristics is the preferred method, but this may not always be feasible because of the subjective factors involved. For the more common classes of equipment, such as construction equipment, the handling characteristics are well enough known that judgments regarding their loading can be made with a relatively high level of confidence.

Handling characteristics become more of a factor where maneuverability limitations are coupled with limited clearances between the item and the aircraft. This combination of factors is further complicated by the skill level of equipment operators. A highly qualified operator would be capable of loading a vehicle under critical circumstances, whereas an average operator might not be able to do so. It should be assumed when verifying handling capability that operators of average skill or lower will be used in actual aircraft loading functions.

The level ground handling performance of many vehicles gives a good indication of their loading handling characteristics. A simple mock-up of the aircraft ramp and cargo compartment envelope may be helpful in proving the loadability of more critical items without the expense of an actual test loading. For the relatively few extremely critical items, a test loading may be required. Because of high manpower and equipment costs, test loading should be used only as a last resort.

VERIFICATION LESSONS LEARNED

Vehicles should have handling characteristics which will permit loading by backing up the ramp into the aircraft. This may involve more loading time at the origin but permits rapid offloading at the destination, which is often in a hostile environment.

Source: https://assist.dla.mil -- Downloaded: 2016-12-11T01:38Z
Check the source to verify that this is the current version before use.

4.2.2.1 **Materials handling equipment (MHE) requirements.** Whenever possible, item design shall incorporate features which permit on/offloading without the use of materials handling equipment other than that normally a part of the aircraft equipment such as ramps and winch. Provisions for winching shall include attachment points which will permit a straight ahead pulling force. Where MHE is required to assist in item disassembly/assembly and loading, it must be within the organic capability of the using unit to make the item operationally ready within the specified time and manpower constraints.

REQUIREMENT RATIONALE (4.2.2.1)

The less reliance on supporting MHE, the greater the ability to load/offload items even in the austere environments in which many operations must take place. In many cases, the required MHE will not be available at the destination unless it also is air transported to the offload site. This not only delays the offloading of the item, but denies valuable aircraft space to other airlift cargo. A straight ahead winch pulling force is important because it keeps the vehicle tracking straight during on/offloading, minimizing steering corrections and the potential for item or aircraft damage.

REQUIREMENT GUIDANCE

With the trend to procurement of commercial, off-the-shelf equipment, less latitude is available in the area of wheeled and tracked vehicles to exercise design judgment to implement this requirement. However, these factors should be recognized in the source selection process and every effort should be made to avoid items with inherent transportability problems. More design freedom exists in the area of initial item design. This is a particularly important time for consideration of this and all air transportability requirements for two reasons. First, within item functional limits, the design has not been frozen and may still accommodate features which enhance the item's handling characteristics. Second, initial item design is often perpetuated through extended use of the item or with the basic item modified to function in other mission roles. This means that designed-in problems are perpetuated if they are permitted in the initial design.

REQUIREMENT LESSONS LEARNED

Most standard containers and shelters can be loaded with the aircraft cargo winch from the ground if they have mobilizers attached. This also has the advantage of providing ground mobility. One disadvantage is that the mobilizer sets require approximately 10 additional feet of cargo floor for storage. In this mode, containers/shelters need not be placed on pallet trains and loaded into the aircraft from K-loaders.

Many instances can be cited where vehicles fully qualified for air transport have been progressively modified to the point where they no longer can be handled without supporting MHE. While these modifications may not prevent the vehicles from being air transported, they severely restrict the on/offloading options.

Source: https://assist.dla.mil -- Downloaded: 2016-12-11T01:38Z
Check the source to verify that this is the current version before use.

One of the greatest problems in designing handling provisions of items is the failure to recognize the degree to which an item's maneuverability is limited by narrow aircraft ramps and small interior clearances. Generally only small directional corrections can be made because of these restrictions.

For items with runners, skids, or flat bottoms designed to be compatible with the 463L roller system, the following lessons apply:

a. For efficient use of the aircraft, the base/pallet should lock into the aircraft rail system. This will permit the equipment to be secured to the pallet for the required restraint and then the pallet/equipment assembly can be locked into the aircraft to the required restraint level. However, some long (exceeding 30 feet) and/or heavy (exceeding 30,000 pounds) equipment items are difficult to align with the aircraft guide rail system.

b. Load distribution between the pallet and the roller conveyor systems is critical in the design of specialized pallets and/or integral base designs. Skids and flat bottom pallets must have continuous strength in the areas that interface with the roller conveyor systems. Sometimes, due to misalignment between cargo loaders and the aircraft, the roller conveyor systems are not coplanar; therefore, a pallet/base can contact only a single set of rollers during the transition or cresting process.

c. The underside of the pallet or skid base must be as flat as possible and supported adequately to avoid a "washboard" or "wavy" shape while traversing the roller system. In addition, there should be no sharp edges, discontinuities, or projections which could damage the rollers. The leading and trailing edges of the pallet or skids should be beveled at a 45-degree angle or rounded to ease the transition as the edge moves onto the rollers.

5.2.2.1 **MHE requirements verification.** This requirement shall be satisfied when actual on/offloading under simulated mission conditions shows that procedures and elapsed times meet the criteria established by the user/program office for the item/mission scenario. Concurrence of the ATTLA shall be necessary where the methods and/or equipment used impact on aircraft/personnel safety during loading or flight.

VERIFICATION RATIONALE (5.2.2.1)

Experience has shown that analytical methods of verifying this requirement can be effectively used in many cases. However, where sophisticated handling features are employed, actual demonstration of the item's capabilities is the preferred method of verification. This not only verifies the acceptability of the item's features, but also identifies the procedures necessary for successful handling.

VERIFICATION GUIDANCE

To the extent possible, analytical verification should be used because it is faster and the least costly. The ATTLA, as final approval authority, has the expertise to provide assistance in this area. Handling demonstrations, using

Source: https://assist.dla.mil -- Downloaded: 2016-12-11T01:38Z
Check the source to verify that this is the current version before use.

a mock-up of the aircraft ramps and cargo compartment envelope, are the next desirable option. Test loading using an actual aircraft should be resorted to only after all other options have been thoroughly investigated. Test loadings, while providing an absolute check of an item's handling characteristics, are very expensive and require ATTLA approval before being performed.

VERIFICATION LESSONS LEARNED

Historically, early consideration of air transport, supported by accurate technical data for on/offloading analysis, has eliminated the requirement for actual test loading in all but a few special cases.

4.2.2.2 **Shoring requirements.** The use of any type of shoring shall be avoided to the maximum extent consistent with mission requirements. To the extent that such design does not compromise performance, items shall incorporate features which enhance their handling characteristics so that they can be on/offloaded without the use of shoring.

REQUIREMENT RATIONALE (4.2.2.2)

The use of wood shoring is disadvantageous for a number of reasons. Each pound of shoring reduces aircraft payload by a similar amount. Shoring use is time consuming, which increases loading time and decreases loading clearance, which in turn restricts the dimensions of the item to be airlifted. Often, suitable shoring may not be available at the loading site, particularly at remote sites.

REQUIREMENT GUIDANCE

Shoring should be considered an expedient to be used only when all other practical methods of meeting handling requirements have been exhausted. It should never be considered a substitute for prudent planning or adequate design. Approach shoring is most frequently required because of problems involving projection (see 4.2.1.2), overhang (see 4.2.1.3), or ramp cresting (see 4.2.1.4). Addressing these potential problems early in the design phase and consulting with the ATTLA for advice often results in practical solutions to these problems. Floor protective shoring is used principally to protect the aircraft floor from damage due to steel wheels, lugs, cleats and studs, etc. In many cases there is no practical way to avoid certain of these features in item design. Floor protective shoring becomes a necessity in these situations. Rolling shoring is used to provide a means of accommodating unit floor or ramp overloads during the loading process only. This again is an expedient to be used only when all practical methods of designing around a problem have been exhausted. It is important to recognize that, although shoring decreases psi and plf loading, it does not permit these load limits to be exceeded. Axle load allowables are not affected.

REQUIREMENT LESSONS LEARNED

The weight of the shoring used becomes, in effect, a part of the weight of the item because it must be considered a part of the load imposed on the aircraft.

Source: https://assist.dla.mil -- Downloaded: 2016-12-11T01:38Z
Check the source to verify that this is the current version before use.

Tires have tread which effectively reduces contact area. In case of construction and rough terrain vehicles, this reduction can be significant. The shoring thickness must be at least one-half of the tire groove width.

Shoring reduces the usable cargo compartment height. Care must be taken that its use does not create a clearance problem.

The aircraft has only two ramps. Where an item has a centerline wheel, approach shoring will be required to function also as a third ramp.

5.2.2.2 Shoring requirements verification. Compliance with 4.2.2.2 requirements shall be determined on a case-by-case basis by the ATTLA. Compliance shall be considered achieved when it has been shown that all reasonable efforts to design out the need for approach/rolling shoring have been exhausted.

VERIFICATION RATIONALE (5.2.2.2)

In almost all cases analysis can be used to verify the adequacy of shoring. This determination is made from knowledge of the physical characteristics of the item and the shoring combined with geometric considerations. Certain situations, generally involving heavy, complex items and the need for approach shoring, may require a demonstration or test loading to verify that all factors have been met.

VERIFICATION GUIDANCE

Appendix B, figure 12 shows the load spreading effect of shoring. It is important to note that, although shoring reduces the cargo psi and plf loading, it does not allow these aircraft limits to be exceeded. Axle load allowables are not affected. Using the geometric weight distribution estimation technique, knowledge of the amount of the load and its contact area is all that is necessary to compute the load distribution effect of the shoring. Comparison of the calculated load value with the limit load for the particular aircraft will determine acceptability of the shoring. Approach or "step-up" shoring primarily serves to decrease the ramp angle making it possible to load certain items which would otherwise have cresting, projection, or overhang problems. Acceptability of approach shoring can be shown by analysis in many cases. In more complex loading situations it may be necessary to perform a demonstration or test loading during which the exact configuration of the shoring is established and documented.

VERIFICATION LESSONS LEARNED

Source: https://assist.dla.mil -- Downloaded: 2016-12-11T01:38Z
Check the source to verify that this is the current version before use.

4.2.3 **Item restraint provisions.** The equipment shall be capable of being restrained against and withstanding without loss of serviceability, forces imposed by aircraft flight and maneuvering operations. All cargo items, except cargo loaded on HCU-6/E pallets and restrained by MIL-N-27444 nets, shall meet the applicable requirements of 4.2.3.1, 4.2.3.2, and 4.2.3.3.

5.2.3 **Item restraint provision verification.** Compliance with 4.2.3 requirements shall be considered to be met when the appropriate requirements of 4.2.3.1, 4.2.3.2 and 4.2.3.3 are complied with.

4.2.3.1 **Tiedown provisions.** Equipment shall be provided with not less than four tiedown provisions which can adequately restrain the equipment when subjected to the accelerations specified in 4.2.3.2. The tiedown provisions will accommodate both ends of MIL-T-25959 and MIL-T-27260 tiedown devices and shall be marked in accordance with 4.2.7. The tiedown provisions shall be capable of accepting the maximum number of tiedown devices as required by the tiedown grid pattern. These tiedown provisions shall be suitable for use in conjunction with the tiedown provisions on the aircraft floor, which in general, have a capacity of 10,000 pounds and are placed on 20-inch centers and on the C-5, 25,000 pounds at 40-inch centers.

Unless specified in the order or contract, a proposed tiedown grid pattern shall be provided for either C-130 or C-141 aircraft.

REQUIREMENT RATIONALE (4.2.3.1)

Any item of equipment must have a suitable number of tiedown provisions to allow restraint to the aircraft, using available, on-board tiedown devices. Three such devices--Type CGU-1/B for nylon straps and Types MB-1 and MB-2 for chains--are currently in use. These devices are described in appendix B, 30.1.6.4.3. Any tiedown provision should be designed to allow either end of the tiedown device to be used. The other end of the device is secured to a tiedown filling in the aircraft floor. In general, the aircraft has a tiedown point grid pattern on 20-inch (0.51 m) centers. Most tiedown fittings have a rated strength of 10,000 pounds (4,536 kg.). A few have a capacity of 25,000 pounds (11,340 kg). The C-5A has 25,000 pound attachment points on 40-inch centers.

Because all loads are reacted at the tiedown provisions, these must be of sufficient size and strength to accept the number and type of tiedown devices necessary to meet fore, aft, lateral, and vertical upward restraint criteria of 4.2.3.2. For most items, at least four tiedown provisions are necessary to restrain an item along its three principal geometric axes. The tiedown provisions must be sized to accept at least two tiedown devices oriented at 90 degrees to each other or a single device of sufficient strength and properly positioned to accept the equivalent resultant load of the dual chain configuration.

REQUIREMENT GUIDANCE

Tiedown provisions are usually considered to be specifically designed for the purpose. Such items as lifting and tiedown rings and clevises are commonly

Source: https://assist.dla.mil -- Downloaded: 2016-12-11T01:38Z
Check the source to verify that this is the current version before use.

used as tiedown provisions. However, tiedown provisions which naturally result from item configuration are acceptable for use provided their strength is adequate to provide the required restraint. Examples of such tiedown provisions are vehicle frames, axles and crossmembers, pintle hooks, and cut-outs or other openings in structural members.

All vehicles must be restrained by using tiedown provisions on the frame. However, up to one-half of the tiedown devices may be attached to the vehicle axles. The designer must insure that the through structure to the axles can withstand the loads when the vehicle is secured in this manner.

Since a load can move in any direction, at least four tiedowns 90 degrees (1.57 radians) apart must be secured to an item. The total number is determined by the weight of the item. However, all tiedown provisions should, whenever possible, be symmetrical to allow even loading. The tiedown provisions may be designed to accommodate as many tiedown devices as necessary to achieve the required restraint. MIL-STD-209 provides design information on tiedown provisions.

REQUIREMENT LESSONS LEARNED

The following items must be taken into consideration when determining tiedown provisions type and quantity:

a. When computing the number of tiedown provisions, consider restraint capability degradation incurred when applying tiedown devices at an angle.

b. If possible, position tiedown provisions around the horizontal periphery of the equipment. Also, locate these points so that they are accessible to the equipment on the aircraft. If the equipment needs servicing during flight, the tiedown provisions should be located so as not to block these areas.

The following items must be taken into consideration when determining the number and type of tiedown devices:

a. Do not intermix chain and webbing tiedowns. Use either all chains or all webbing. The difference in elongation between the two types of tiedowns creates unsymmetrical loading and increases the potential for restraint device overload and failure.

b. Selection of tiedown devices should be based on the appropriate strength rating to provide adequate restraint with the minimum number of devices.

c. Tiedown device strength rating must not exceed the strength rating of available tiedown fittings or points of attachment to the cargo.

d. Use steel tiedown devices on heavy objects which have attachment lugs or a hard surface for the chains to go around.

Source: https://assist.dla.mil -- Downloaded: 2016-12-11T01:38Z
Check the source to verify that this is the current version before use.

e. Attach tiedowns in a symetrical pattern by using corresponding fittings on each side of the cargo floor centerline.

5.2.3.1 **Tiedown provisions verification.** The requirements of 4.2.3.1 shall be met when it can be shown by engineering analysis or actual test that the proposed tiedown provisions are adequate in strength, location, size, and number to accept the required MIL-T-25959 and MIL-T-27260 tiedown devices to provide the item restraint called out in 4.2.3.2.

VERIFICATION RATIONALE (5.2.3.1)

The complete restraint system consists of tiedown provisions on the item, CGU-1/B, MB-1, and MB-2 tiedown devices and cargo floor tiedown fittings and receptacles. All components except the tiedown provisions on the items have previously been qualified at their rated capacities. The number and strength of the tiedown provisions is the only remaining unknown requiring verification.

Verification of these requirements can be accomplished in two ways. Proof of capability can be determined through engineering analysis with the knowledge of tiedown pattern geometry and materials characteristics. Because tiedown patterns may change due to aircraft differences, equipment availability, and aircraft load characteristics, proof of capability must be predictated on "worst case" conditions. The second method of proof is actual testing of the tiedown provisions by subjecting them to appropriate "worst case" loads and angles of application.

The analytical method of verification is preferred because it is generally less costly and time consuming.

VERIFICATION GUIDANCE

Tiedown provisions on items should be located such that the lines of action of the attached tiedown devices intersect, if possible, above the cargo center of gravity as shown in appendix B, figure 16. Such an arrangement reduces the tendency of an item to overturn when subjected to combined upward and side loads.

The point of attachment of a tiedown device to a cargo unit must be substantial enough to withstand the loads for which the cargo unit is being restrained. A tiedown device must not be attached to just any convenient protrusion on a cargo unit without due consideration of the protrusion's strength.

The angle of application of tiedown devices affects the restraint capability of that device. The rated capacity of a tiedown device applies only in pure tension. Most cargo units are restrained by tiedown devices angled from the attachment points to the floor tiedown fittings. This has the advantage of having one tiedown device provide restraint in more than one plane, but at a reduced restraint level dependent on the angle of the line of action. Thus, the resultant forces applied concurrently in each principal plane must not exceed the rated capacity of the tiedown device or the tiedown provisions, whichever is less.

Source: https://assist.dla.mil -- Downloaded: 2016-12-11T01:38Z
Check the source to verify that this is the current version before use.

VERIFICATION LESSONS LEARNED

4.2.3.2 Restraint criteria. Cargo items in their shipping configuration shall be capable of being restrained to and withstanding, without loss of serviceability, the following forces applied statically and independently:

Direction	Load Factor
Up	2.0 G (3.7 G for nuclear cargo)
Down	4.5 G

Cargo items in their shipping configuration shall be capable of being restrained to and withstanding, without loss of structural integrity, the following accelerations applied statically and independently:

Direction	Load Factor
Forward	3.0 G
Aft	1.5 G
Lateral	1.5 G

For the three conditions above, internal equipment need not remain serviceable. Refer to 4.2.5.1 for other serviceability requirements in this area.

(1.0 is the acceleration due to gravity; all directions are relative to the aircraft.)

a. The equipment shall also be able to withstand the following changes in velocity (Δ V) of the aircraft floor within 0.1 second without loss of serviceability.

Direction	Δ V
Up	10.0 ft/sec (15.2 ft/sec for nuclear cargo)
Down	11.5 ft/sec

Cargo items in their shipping configuration shall be capable of being restrained to and withstanding, without loss of structural integrity, the following changes in velocity within .1 sec applied independently:

Direction	Δ V
Forward	10.0 ft/sec
Aft	5.0 ft/sec
Lateral	5.0 ft/sec

For the three conditions above, internal equipment need not remain serviceable. Refer to 4.2.5.1 for other serviceability requirements in this area.

The final velocity must be held long enough for an adequate cargo response to the input.

Source: https://assist.dla.mil -- Downloaded: 2016-12-11T01:38Z
Check the source to verify that this is the current version before use.

b. When equipment is of such size or configuration that it can be loaded into cargo aircraft with either end facing forward (i.e., a truck that can be driven forward and backed into the aircraft), the highest load factor shall apply both fore and aft. When the loading direction is fixed or specified, only the forward requirement shall apply in the forward direction and only the aft requirement shall apply in the rearward direction.

c. Vehicles and other equipment shall be capable of withstanding, without loss of serviceability, the above mentioned vertical downward load factor imposed on their wheels, suspension systems, or support.

d. If an item is designated for airdrop: (1) the 3 g load factor shall be applied both fore and aft, and (2) the rigged item shall not exceed the aircraft restraint rail capability to withstand the load factors in this paragraph.

e. Other non-MAC operated aircraft may require higher levels of restraint. Refer to the specific aircraft loading manual.

REQUIREMENT RATIONALE (4.2.3.2)

The restraint criteria in current use have resulted from a structured evolution. During this process, safety of flight considerations have been carefully balanced against operational considerations. The result is a set of criteria which provide a high probability of safety under expected flight conditions and, at the same time, impose reasonable operational requirements. The restraint levels specified are based on a statistical analysis of cargo aircraft accident data coupled with years of successful cargo flight experience at reduced restraint levels.

Both static and dynamic conditions are required due to the nature of the actual air transport environment (i.e., the factors arrived at are derived from maneuver, gust, and crash loads). The change in velocity within a specified time is designed to give latitude for verification of the dynamic conditions by testing.

The item may be rigged oriented in either direction for airdrop depending upon mission and mode of airdrop. Therefore, the item should be capable of withstanding the higher longitudinal load factor in both directions. An airdrop platform rigged item, when locked into the aircraft restraint rails, can be restrained to the load factors required in this paragraph. However, the aircraft restraint rails (specifically the vertical lips) on the C-130 and C-141 aircraft were designed to provide the required restraint based upon the center of gravity being restricted to specific locations on the airdrop platform.

Source: https://assist.dla.mil -- Downloaded: 2016-12-11T01:38Z
Check the source to verify that this is the current version before use.

REQUIREMENT GUIDANCE

The following factors should be considered when designing equipment to meet the specific restraint criteria:

a. When equipment is of such size or configuration that it can be loaded into cargo aircraft with either end facing forward (i.e., a truck that can be driven forward or backed into the aircraft), the highest load factor shall apply both fore and aft. When the loading direction is fixed or specified, the 3 g requirement shall apply in the forward direction and the aft load factor requirement shall apply in the rearward direction.

b. Vehicles and other equipment shall be capable of withstanding, without loss of serviceability, a minimum the above vertical downward load factor imposed on their wheels, suspension systems, or support.

c. Figure 1 provides the airdrop platform center of gravity limits for the C-130 and C-141 aircraft. The center of gravity limit of 190 and 209 inches from the forward end of the airdrop platform for the C-130 and C-141 aircraft, respectively, is an airdrop requirement. These two limits are the distance from the end of the vertical restraint lip on the aircraft rails to the aft end of the ramp, and the requirement is established to insure the rigged item can initiate rotation as the center of gravity passes over the end of the ramp without the airdrop platform contacting the aircraft rail vertical restraint lip under a jettison condition.

d. MIL-STD-209 provides criteria for attachment (tiedown) provisions on the item which can interface with aircraft tiedowns' strength and physical dimensions.

e. The procuring agency may wish to levy load requirements in excess of those stated herein due to other mission requirements.

REQUIREMENT LESSONS LEARNED

The amount of restraint afforded by a tiedown (strap, chains, etc.) in a specific direction will be less than the capacity of the tiedown due to the angle at which the tiedown is attached.

Wheeled vehicles are usually self-limiting in their ability to withstand vertical downward forces. The limiting factor is the ability of the suspension system and wheels to resist down loads without failure that would cause aircraft damage. For this reason, suspension loads are limited to the vehicle's cross-country rated load or its equivalent commercial rating. Where this rating is exceeded for flight, but not for loading, devices should be incorporated in the design of the vehicle to limit the load experienced by the suspension system to safe levels.

Vehicles with only a commercial highway gross vehicle weight rating are generally limited to 80 percent of the highway gross vehicle rating and 80 percent of the individual highway axle/suspension rating. Analysis or test would be required to upgrade the vehicle weight above 80 percent of the highway rating.

Source: https://assist.dla.mil -- Downloaded: 2016-12-11T01:38Z
Check the source to verify that this is the current version before use.

The M-149 water trailer was not designed to withstand the air transport load factors with a full complement of water in the tank. Evaluations are now required to attempt to qualify the trailer in this configuration.

The forward restraint criteria was lowered from 4 g to 3 g in July 1974. Refer to ASD TR-73-17, Final Report - Air Cargo Restraint Criteria, April 1973, and ASD TR-76-30, Cargo Aircraft and Spacecraft Forward Restraint Criteria.

5.2.3.2 **Restraint criteria verification.** Compliance with the requirements of 4.2.3.2 shall be assured when it can be demonstrated by engineering analysis or actual test that the item in its shipping configuration and restrained as it would be for flight can be subjected to the stated static and dynamic loads without loss of structural integrity of the item or without incurring damage to the aircraft. If loss of structural integrity occurs or if any parts of the item become projectiles, it shall be sufficient to cause rejection of the load for airlift. If loss of function/serviceability occurs during verification of the vertical up or vertical down restraint criteria requirement, it shall be sufficient to cause rejection of the load for airlift. For palletized items in which the item is restrained to the pallet, the item center of gravity location shall be verified by analysis or test. Where a vehicle does not have a cross-country weight rating and its weight or axle/suspension loading exceeds 80 percent of its highway gross vehicle rating, test or complete analysis is required to verify that the item can withstand the downward load factor.

VERIFICATION RATIONALE (5.2.3.2)

Items are restrained to the aircraft either by tiedown to the aircraft floor or restrained to a pallet which in turn is locked in the aircraft rail system floor.

Standard aircraft and airdrop tiedowns, and aircraft rail locks and tiedown fittings, do not require verification. Therefore, only restraint criteria verification of the item in its aerial delivery configuration and its attaching (tiedown) provisions is required. The item center of gravity is restricted as described in 3.2.3.2 guidance to insure that palletized load can be restrained to the load factors described by the requirement. Verification of the rigged item center of gravity location is required. Analysis or test will suffice for determining the location.

VERIFICATION GUIDANCE

a. Analysis normally will suffice in verification of the item to withstand the load factors in all directions. When fluids are carried, the analysis should include the effects of the fluid. Testing is the preferred method of verification of a vehicular item's capability to withstand the downward load factors when the weight is above the 80 percent of the gross highway weight rating. However, a complete analysis of the axle/suspension and vehicle is an acceptable substitute.

Source: https://assist.dla.mil -- Downloaded: 2016-12-11T01:38Z
Check the source to verify that this is the current version before use.

b. For the dynamic vertical up and down load conditions, the vehicle must be oriented as in the aircraft since the velocity change accounts for 3.0 G (up) and 3.5 G (down) respectively. The intent of this requirement is to have the cargo under a 1 G static condition, then subjected to the dynamic loadings.

c. If testing is used for the dynamic verification, an acceptable rate of onset prior to the beginning of the 0.1 second measurement is 20 A/sec or greater, where A is the appropriate load factor of 4.2.3.2. Similar rates for decay are also acceptable.

If a drop test is accomplished to verify the dynamic down load requirement, the change in velocity is changed from 11.50 ft/sec to 14.50 ft/sec. This is because a 1 G static load was not present on the suspension during the drop test.

d. The change in velocity during a test can be measured directly or can be derived from an acceleration trace. The change in velocity requirement opens up additional methods of complying with the dynamic aspect of the restraint requirement.

VERIFICATION LESSONS LEARNED

Not only must the basic item be restrained to the criteria specified, but all components of the basic item must be as well. Further amplification of this point is made in 3.2.3.3.

The Commercial Utility Cargo Vehicle (CUCV) exceeded the 80 percent commercial highway gross weight criteria. The vehicle was successfully tested at its commercial highway gross weight by placing each wheel of the vehicle on four individual instrumented hydraulic rams which, in being activated simultaneously, applied the required load factors to the vehicle.

4.2.3.3 **Accompanying loads.** Where a requirement exists for equipment to be air transported while carrying or having attached to itself additional equipment or cargo, the entire unit load shall meet the requirements of 4.2.3.2. Accompanying loads shall not exceed the cross-country payload capability of the vehicle or its equivalent (see 4.2.4.6). Where the air delivered load is different from the general load capacity of the vehicle, the allowable load shall be marked in accordance with 4.2.7. The additional equipment shall be independently tested to insure restraint to the main item of equipment.

REQUIREMENT RATIONALE (4.2.3.3)

In many cargo aircraft the available cargo compartment volume is effectively filled before the weight carrying capability of the aircraft is reached. This is particularly true where high volume-to-weight ratio items such as vehicles are involved. In an effort to more effectively utilize the aircraft payload capability, it is often practical to use the load compartment of vehicles to carry additional cargo. This would be an obvious example of an item with an accompanying load.

Source: https://assist.dla.mil -- Downloaded: 2016-12-11T01:38Z
Check the source to verify that this is the current version before use.

More subtle examples of accompanying loads are situations involving certain vehicles whose design incorporates components which can become disengaged under flight load conditions. An example is the truck-mounted crane. The crane is mounted on the truck chassis using a large diameter kingpin with no provisions to prevent the kingpin from becoming disengaged during vertical accelerations.

Because accompanying loads are subjected to all the same acceleration forces as the basic item, they must be independently restrained to the same levels. The restraint criteria to be met are shown in 4.2.3.2.

Because it is impractical to tie down individual components of items such as trucks or helicopters, these components should be designed with sufficient inherent strength to withstand the acceleration forces of 4.2.3.2. The entire vehicle, including any additional cargo, must be fully restrained at its gross transported weight. Loose items such as those listed below should have provisions to be secured to the frame of the vehicle:

a. Spare wheels, tools and tool boxes, towing chains, pinch bars, etc.

b. Bulldozer blades and push arms.

c. Cranes or booms on wrecking trucks, etc.

d. Dump truck bodies and other hydraulic or mechanical lift mechanisms.

e. Machines and tools in shop trucks, shelters, and containers.

REQUIREMENT GUIDANCE

Where accompanying loads are involved in the shipping configuration of an item, the following factors must be considered. First, where equipment can carry additional load or is moved in a configuration where its weight is increased, the restraint system must be developed at the highest possible gross weight. Second, all loose loads or equipment components which are not inherently restrained to withstand the acceleration loads of 4.2.3.2 must be separately restrained to these levels. Third, the additional loads placed on vehicles must not cause the vehicle to exceed its cross-country weight rating, axle load limits, or other air transportability criteria.

The common method of restraining accompanying loads is to tie them down to a structurally sound member of the principal item such as a vehicle frame. If this mode is used, restraint design can be based on the weight of the accompanying load. The principal item must be restrained to the maximum weight of the item plus the accompanying load. If the principal item and the accompanying load are each restrained to the aircraft floor, restraint design can be based on the highest weight of each load. All requirements of 4.2.3.1 must be complied with.

REQUIREMENT LESSONS LEARNED

Source: https://assist.dla.mil -- Downloaded: 2016-12-11T01:38Z
Check the source to verify that this is the current version before use.

5.2.3.3 Accompanying loads verification. The requirements of 4.2.3.3 shall be verified in accordance with the provisions of 5.2.3.2 and 5.2.7, if appropriate.

VERIFICATION RATIONALE (5.2.3.3)

The restraint criteria in current use have resulted from a structured evolution. During this process, safety of flight considerations have been carefully balanced against operational considerations. The result is a set of criteria which provide a high probability of safety under expected flight conditions and, at the same time, impose reasonable operational requirements. The restraint levels specified are based on a statistical analysis of cargo aircraft accident data coupled with years of successful cargo flight experience at reduced restraint levels.

VERIFICATION GUIDANCE

Because the accompanying load is generally secured to the basic vehicle or item rather than the aircraft floor, it will be necessary to determine that the attachment points on both the load and the carrying structure are adequate in accordance with the provisions of 4.2.3.1. Where the accompanying load is restrained to the aircraft floor, only the load attachment points need be verified for compliance.

VERIFICATION LESSONS LEARNED

4.2.4 Item weight limits. When in its shipping configuration, item gross weight and weight distribution shall meet the requirements of the following subparagraphs as appropriate to the type of item under consideration.

REQUIREMENT RATIONALE (4.2.4)

In general, the allowable cargo capacity is dependent on the aircraft floor strength, which varies from one location to another and is dependent on aircraft structural design. Variations in item design impose different types of loads on the aircraft structure. These aircraft structural limits are treated in detail in appendix B. In addition to unique aircraft structure loading, item weight and center-of-gravity affects aircraft weight and balance considerations as well as aircraft operational range.

REQUIREMENT GUIDANCE

See guidance for the specific requirement.

REQUIREMENT LESSONS LEARNED

See lessons learned for the specific requirement.

Source: https://assist.dla.mil -- Downloaded: 2016-12-11T01:38Z
Check the source to verify that this is the current version before use.

5.2.4 **Item weight limits verification.** Compliance with the verification procedures of each of the appropriate subparagraphs, 5.2.4.1 through 5.2.4.6, shall show compliance with this requirement.

VERIFICATION RATIONALE (5.2.4)

See rationale for the specific requirement.

VERIFICATION GUIDANCE

See guidance for the specific requirement.

VERIFICATION LESSONS LEARNED

See lessons learned for the specific requirement.

4.2.4.1 **Gross weight/center of gravity.** The gross weight of items in their shipping configuration shall not exceed the aircraft limits specified in AFR 76-2 for the mission/aircraft combination under consideration. Where design flexibility permits, the center of gravity of cargo items should correspond with the geometric center as closely as possible. In all cases, the center of gravity shall be determined and marked on the item in accordance with 4.2.7.

REQUIREMENT RATIONALE (4.2.4.1)

Assuming all other load parameters are met, the maximum single item weight which can be carried in an aircraft is dependent on its payload-distance characteristics. Without considering the other factors which influence range, the heavier the payload, the shorter the range. In all cases there is a maximum payload which cannot be exceeded under any circumstances. The aircraft center of gravity (CG) is the point around which the aircraft will balance. The flight performance of the aircraft is dependent on the location of this point which can vary within limits. If the CG is outside this limit the aircraft cannot be flown. The aircraft CG is affected by the location of each individual item CG. In most cases the location of an item's CG is the natural result of its configuration. A preferred location is at or near the geometric center of the item.

REQUIREMENT GUIDANCE

Payload-distance information is presented in AFR 76-2. Center of gravity limit data are presented in the appendix for each aircraft. Use of these curves will determine if proposed loads will meet these requirements. The ability to tailor CG is, admittedly, limited. However, this factor should be recognized in item design. The areas which may provide the greatest potential for doing this are selective location of accompanying loads and CG shifts resulting from item reconfiguration to meet weight or dimensional restrictions.

Source: https://assist.dla.mil -- Downloaded: 2016-12-11T01:38Z
Check the source to verify that this is the current version before use.

REQUIREMENT LESSONS LEARNED

People tend to associate CG with the geometric center of items. For this reason it is important to assure adequate marking of CG location so that aircraft CG may be computed accurately. An advantage of a central CG location is that it offers more flexible loading options.

5.2.4.1 **Gross weight/center of gravity verification.** Compliance with this requirement shall be verified by comparison of item weight, aircraft and mission scenario with the appropriate payload-range data. The acceptability of item center of gravity shall be verified by measurement or analysis and comparison with the CG limit data. Marking shall be considered satisfactory when it meets the requirements of 4.2.7.

VERIFICATION RATIONALE (5.2.4.1)

Comparison of the physical characteristics of candidate items with the established aircraft limit data is the most effective method of verifying this requirement. These data have been developed by the aircraft manufacturer and represent safe operating limits. Marking requirements are generally verified by inspection.

VERIFICATION GUIDANCE

The analysis by comparison of known physical characteristics with established criteria is a straight-forward matter. Determination of the item's center of gravity and that of the total load CG may be made using Appendix B, 30.1.2.10 for methodology.

VERIFICATION LESSONS LEARNED

4.2.4.2 **Aircraft compartment limits.** In addition to the requirements of 4.2.4.1, cargo items shall not impose loads in any compartment in excess of the values shown in the compartment load limit charts for the aircraft under consideration. Both loading and flight limits must be observed and items occupying more than one compartment must be selectively located so they do not overload any compartment.

REQUIREMENT RATIONALE (4.2.4.2)

The structural characteristics of the aircraft are such that multiple loading restrictions apply and must be simultaneously satisfied. These restrictions, though varying in specific nature, are imposed by aircraft design requirements to assure a specified aircraft capability over a given service life. The aircraft compartment limits and those requirements stated in the following subparagraphs are designed to assure maintenance of aircraft serviceability and safety of flight over the design life of the aircraft.

Source: https://assist.dla.mil -- Downloaded: 2016-12-11T01:38Z
Check the source to verify that this is the current version before use.

REQUIREMENT GUIDANCE

This requirement is concerned with the total load imposed on an aircraft compartment. The load limits apply regardless of the type of load, i.e., distributed, concentrated, linear, roller, etc. Meeting this requirement is a necessary, but not sufficient, condition for airlift acceptability. All appropriate weight limit requirements must be satisfied simultaneously. During on/offloading operations, all compartments have a strength equivalent to the strongest compartment under flight conditions. This permits moving items across lower strength areas to position them for flight.

REQUIREMENT LESSONS LEARNED

The lower flight load limits are designed to provide a margin of safety to allow for dynamic flight-induced loadings.

Frequently compartment load limits are not exceeded, but other types of loadings, such as plf loading, tire loads, and axle loads are outside limits. In many cases item design can be modified to satisfy these loading requirements. Shoring should be considered only after all other methods of solution have been investigated. Early contact with the ATTLA is recommended for advice and guidance.

5.2.4.2 Aircraft compartment limits verification. Verification of this requirement shall be by comparison of each load point with the appropriate compartment load limit chart. The requirement is satisfied if no load exceeds any compartment limit either during loading or in flight.

VERIFICATION RATIONALE (5.2.4.2)

Verification of this requirement by comparison of item load imposing characteristics with the compartment limits has been shown to be a cost effective method of determining compliance.

VERIFICATION GUIDANCE

Verification that this particular requirement has been met does not constitute complete satisfaction of all appropriate requirements for a particular item. All other applicable load limits must also be satisfied.

VERIFICATION LESSONS LEARNED

Source: https://assist.dla.mil -- Downloaded: 2016-12-11T01:38Z
Check the source to verify that this is the current version before use.

4.2.4.3 Aircraft roller conveyor limits. Palletized/platform loads and items having integral bases which contact the aircraft 463L roller conveyor system shall not impose loading or flight forces on the roller system which exceed aircraft roller or conveyor load limits. These limits are influenced by the contact pattern as well as compartment floor strength considerations and are addressed in appendix B.

REQUIREMENT RATIONALE (4.2.4.3)

This requirement is established to ensure that the aircraft roller conveyor limits are not exceeded for the most severe flight or loading condition expected for that particular aircraft. The aircraft in-flight roller limits were established by rating the rollers based upon an ultimate in-flight load factor for the particular aircraft. The ultimate load factor for the C-141 is 6.6 g and for the C-5 aircraft is 6.15 g. Additional limits ensure that loads imposed on the roller do not exceed the cargo compartment floor limits. These limits are normally established by dividing the longitudinal floor loading limits by the longitudinal distance between the rollers. These requirements were established by the aircraft manufacturer.

REQUIREMENT GUIDANCE

Each aircraft has a specific procedure for determining limits on the rollers. In all cases, however, the determination of roller loading is accomplished by analysis using the item's contact with the rollers or pallet/platform, and the contact location with respect to the roller locations. HCU-6/E (463L) pallets, airdrop platforms, and energy dissipating material do not provide any load spreading. This premise generally applies to special bases, runners, and skids for items so equipped unless the design specifically provides for load spreading. Load contact patterns should be designed to provide the best load distribution; longitudinal load distribution is generally much preferred to lateral distribution. Note that for items rigged for airdrop, the energy dissipating material stacks are primarily arranged for impact survivability (refer to 3.5) and that some stacks or section of stacks may not transfer loads to the rollers.

REQUIREMENT LESSONS LEARNED

Loads moving on/off the aircraft roller conveyor system must be kept coplanar with the roller surface to prevent excessive forces from being applied to individual rollers.

The load distribution between items bases, skids, or runners and the roller conveyor is critical in the design of these item-to-roller interfacing devices. These devices must have continuous strength in the areas that interface with the roller conveyor system to prevent damage to the rollers or the item base.

Because of the variable roller conveyor spacing between the different aircraft and the cargo loaders (K-loaders), make sure item runners and skids are wide enough to operate on all intended aircraft and loader roller systems. In the C-5, the teeter rollers are a different width than the basic roller.

Source: https://assist.dla.mil -- Downloaded: 2016-12-11T01:38Z
Check the source to verify that this is the current version before use.

The arrangement of energy dissipating material on airdrop items is critical to the loads imposed upon the aircraft floor. The requirement of 4.3.6 will assist in determining the required amount of energy dissipating material.

There are a number of vehicles certified for airdrop from the C-130 aircraft which are not certified from the C-141B because of the different roller limits in the aircraft.

A pallet stop on the C-130 A/A32H-4A rail prevents positioning the rigged item forward of FS 262. A pallet stop on the C-141 aircraft rail prevents positioning the rigged item forward of FS 322.

5.2.4.3 **Aircraft roller conveyor limits verification.** Compliance with this requirement may be shown by analysis for loads exhibiting uniform force distribution properties. For complex loads which exhibit non-uniform loading, instrumented tests may be required if the load concentrations approach the limiting values for the aircraft roller system or if a coplanar attitude between load and roller system cannot be maintained during loading/offloading.

Using initial analysis, if the rigged airdrop item's weight transmits a loading of 1000 pounds per linear (longitudinal) foot or above through the energy dissipating material over the contact area, a test of a rigged item on an instrumented roller test bed mounted on a concrete slab is required. Sets of roller load measurements for each roller under the rigged airdrop shall be recorded. Sufficient sets of data shall be recorded to establish a 0.90 probability that at least 95 percent of the distribution from which this set of roller load samples was taken will be less than the determined value for each individual roller. Where there are items similar to previously qualified items, and less critical in loading, analysis will suffice. Testing is normally conducted by the Government.

VERIFICATION RATIONALE (5.2.4.3)

Experience has shown that most air transport loads are adequately distributed so that the forces imposed on the roller systems are well within limits. Under these conditions, it is sufficient to satisfy this requirement to compare calculated load values against the limit values for the aircraft under consideration. Complex items often exhibit non-uniformly distributed load patterns. Analytical verification of compliance with this requirement is still the preferred method because of cost and time considerations involved in instrumented roller testing. However, such tests are acceptable in all cases and may, in fact, be necessary where loading/unloading involves possible non-coplanar orientation of the load with respect to the roller surface.

VERIFICATION GUIDANCE

Past investigations (see lessons learned) have concluded that apparent uniform loading on the top of the energy dissipating material for rigged airdrop items does not transmit uniform loading to the aircraft rollers. There has been no acceptable standard analytical method for determining rigged airdrop roller loadings because of the complex structural analysis of the load, platform rollers and aircraft shape, and deformations and the dimensional variations of

Source: https://assist.dla.mil -- Downloaded: 2016-12-11T01:38Z
Check the source to verify that this is the current version before use.

all of these components. Testing of every developed item would be cost prohibitive, though testing is required for analytical loadings approaching the required aircraft limits. This verification delineates between items where the rigged item must be tested and where analysis will suffice. The 1000-pound criteria was selected based upon very limited data and will be updated as more samples are acquired. Testing using a concrete slab in lieu of the aircraft floor is allowed because of the cost and the need to remove an aircraft from the operational fleet in order to accomplish the test. Past instrumented tests have shown that roller loads will vary considerably by rolling the rigged item into the test area, taking a reading, rolling the rigged item out and back in again and taking a second reading. Therefore, a statistical analysis of the roller load measurements is required to insure that there is a very high probability that the roller loads are within a given upper limit. To further reduce test requirements, similar items that are less critical in loading do not require tests, even if the item exceeds the preliminary analysis of 1000 pounds, and then only an analysis would be required. Note, the more severe conditions of airdrop; i.e., extraction and tipoff, require a more accurate verification than air transport.

There are no permanent C-130 or C-5 instrumented roller test beds constructed. A C-141 instrumented roller test bed is located at USA Natick Research and Development Center, Natick MA 01760. Data from a C-141 instrumented roller test bed have been used in evaluating airdrop rigged item loadings on lateral rows of rollers for the C-130 aircraft.

VERIFICATION LESSONS LEARNED

Excessive roller loads and possible damage to both rollers and the item base can result from the impact of the edge of skids, runners, and special bases on the roller as the base device rides up and over the roller. A beveled edge similar to that on the 463L pallet should overcome this potential problem.

Testing conducted on an instrumented roller test bed, with an apparent uniformly loaded airdrop test weight, concluded that the loads transmitted to the aircraft rollers were not uniformly distributed. Reference Report on the Testing of the C-141 Roller Conveyor System, Report No 379 and 386, by Brooks & Perkins, Incorporated, Contract No F33657-69-0927.

4.2.4.4 Aircraft floor/ramp loading limits

4.2.4.4.1 Concentrated loads. Loads imposed by cargo items over relatively small areas of the cargo floor/ramp shall not exceed the concentrated load pressures shown in appendix B. In addition, spacing between load concentrations shall be no less than that specified for the candidate aircraft.

REQUIREMENT RATIONALE (4.2.4.4.1)

This requirement is imposed to assure that the puncture/crushing limits of the aircraft floor are not exceeded by the imposition of concentrated loads (see section 3 definitions).

Source: https://assist.dla.mil -- Downloaded: 2016-12-11T01:38Z
Check the source to verify that this is the current version before use.

REQUIREMENT GUIDANCE

To determine if the concentrated loading exceeds the limit value for an aircraft, it is necessary to determine the weight of the item and the area of contact of the load with the floor. If the limiting value is exceeded, check shoring requirements to see if the spreading effect will bring the loading within an acceptable level.

REQUIREMENT LESSONS LEARNED

If shoring is used to spread a load, the weight of the shoring must be considered as a part of the weight when computing psi loading values.

In general, it is better to overcome excessive concentrated loadings through item design than to use shoring. The use of shoring aggravates the weight problem (see above para) and imposes the requirement for shoring to be available at all loading sites.

5.2.4.4 Aircraft floor/ramp loading limits verification

5.2.4.4.1 Concentrated loads verification. The requirements of 4.2.4.4.1 shall be satisfied when it can be shown by measurement or analysis that the actual load pressure values do not exceed the limit load data contained in appendix B.

VERIFICATION RATIONALE (5.2.4.4.1)

This method is the most cost-effective procedure for verifying compliance with this requirement.

VERIFICATION GUIDANCE

See guidance for 4.2.4.4.1.

VERIFICATION LESSONS LEARNED

When using shoring, the weight added will increase by approximately 2 pounds per board foot for construction grade lumber. The weight will be higher for hardwood lumber.

4.2.4.4.2 Linear loads. In addition to the requirements of 4.2.4.4.1, cargo items in their shipping configuration shall not impose a running load in excess of the linear floor/ramp loading limits for the zone and compartment as shown in the appendix for the aircraft concerned.

REQUIREMENT RATIONALE (4.2.4.4.2)

Linear loading imposes bending forces on the aircraft fuselage structure. Limits on these forces have been established by the aircraft manufacturers consistent with mission requirements and aircraft service life. Linear loading forces must be restricted simultaneously with other forces.

Source: https://assist.dla.mil -- Downloaded: 2016-12-11T01:38Z
Check the source to verify that this is the current version before use.

REQUIREMENT GUIDANCE

Determine linear loading by dividing the weight (in pounds) of the item by its projected length (in feet) which results in a pounds per linear foot value. Comparison of this value with the limit value for a given aircraft determines if this criterion has been met. While the bending force is independent of the length of contact between the item and the floor, contact length is a factor in psi/psf loadings which must be simultaneously satisfied.

REQUIREMENT LESSONS LEARNED

It is possible to satisfy linear loading requirements and at the same time exceed psi/psf loading limits. These puncture/crushing loads are determined by the item's contact area while linear loading is dependent on projected length.

5.2.4.4.2 Linear loads verification. Paragraph 4.2.4.4.2 requirements shall be satisfied when it can be shown by measurement or analysis that the item in its shipping configuration does not impose running loads in excess of limit load values shown in appendix B.

VERIFICATION RATIONALE (4.2.4.4.2)

See rationale for 5.2.4.4.1.

VERIFICATION GUIDANCE

See guidance for 5.2.4.4.1.

VERIFICATION LESSONS LEARNED

See lessons learned for 5.2.4.4.1.

4.2.4.4.3 Tongue loads. Loads imposed on the aircraft floor/ramp by vehicle tongues shall not exceed the maximum load limit, when specified, or the concentrated load limits of 4.2.4.4.1.

REQUIREMENT RATIONALE (4.2.4.4.3)

Towed wheeled vehicles impose a tongue load on the aircraft floor when in position for flight. This load must be limited to prevent crushing or puncturing the aircraft floor, particularly under the influence of gust and flight maneuver loads.

REQUIREMENT GUIDANCE

Depending on aircraft design, either a psi loading limit or a combination psi/maximum load limit is imposed. Knowledge of the tongue load and bearing area are sufficient data to calculate psi values. Comparison with aircraft limit values will determine compliance with this requirement.

REQUIREMENT LESSONS LEARNED

Source: https://assist.dla.mil -- Downloaded: 2016-12-11T01:38Z
Check the source to verify that this is the current version before use.

See lessons learned for 4.2.4.4.1.

5.2.4.4.3 **Tongue loads verification.** Compliance with the requirements of 4.2.4.4.3 shall be met when, with the vehicle in its shipping configuration, the tongue load imposed on the aircraft floor does not exceed either the maximum load specified in appendix B or the requirements of 4.2.4.4.1.

VERIFICATION RATIONALE (5.2.4.4.3)

See rationale for 5.2.4.4.1.

VERIFICATION GUIDANCE

See guidance for 5.2.4.4.1.

VERIFICATION LESSONS LEARNED

See lessons learned for 5.2.4.4.1.

4.2.4.4.4 **Axle loads and axle spacing limits.** Vehicle axle loads shall not exceed the aircraft zone and compartment load limits at the appropriate axle spacings shown in appendix B. Both flight and loading limits must be observed.

REQUIREMENT RATIONALE (4.2.4.4.4)

Vehicle axle loads impose bending forces on the aircraft fuselage. Axle spacing requirements are set to assure that forces are distributed so that major fuselage structural members do not experience overload conditions. Both limits are set by the airframe manufacturer based on design utilization of the aircraft over a specified service life. Item loading limits are equal to or higher than flight limits because no gust or flight maneuver forces are secondarily imposed during the loading/unloading process. Thus, in some instances it may be possible to load an out-of-limit axle if provision can be made through the use of shoring or other means to bring the axle within flight limits once the vehicle is on-board the aircraft.

REQUIREMENT GUIDANCE

Appendix B specifies the axle load and axle spacing limits. Knowledge of the axle configuration (number of wheels per axle), axle weight and spacing will permit determination of the acceptability of the vehicle for loading and flight. The number of wheels per axle may become the limiting factor rather than the axle weight per se. In the C-141B aircraft, for instance, a two wheeled axle can support a maximum of 15,000 pounds (with shoring), whereas the maximum axle load is 20,000 pounds. In order to utilize this maximum weight, a four-wheel axle configuration would be necessary or two two-wheel axles spaced at least four feet apart.

REQUIREMENT LESSONS LEARNED

Axle loads and wheel loads must be satisfied simultaneously. Often axle/wheel configuration will be such that the wheel load becomes the more restrictive criteria (see 4.2.4.4.5).

Source: https://assist.dla.mil -- Downloaded: 2016-12-11T01:38Z
Check the source to verify that this is the current version before use.

It is important to insure that, where the axle/wheel configuration permits a given load, the tires are of the appropriate load-bearing range so that tire failure will not occur under either loading or flight conditions. Use of a better grade tire than required for operational purposes may prove to be cost effective if extensive precautions need otherwise be taken in order to airlift the vehicle.

5.2.4.4.4 **Axle loads and axle spacing limits verification.** To assure verification of the requirements of 4.2.4.4.4 requires simultaneous satisfaction of axle load limits and axle spacing limits as defined in appendix B. Compliance with these requirements shall exist when no axle loads exceed the limits and the appropriate minimum axle spacing requirements are met. Failure to meet either criteria shall be cause for load rejection.

VERIFICATION RATIONALE (5.2.4.4.4)

Experience has shown that this requirement can generally be verified by comparison of axle/wheel configurations, axle loads, and axle spacing with aircraft limit data. Analysis may be required for loading procedures which involve ramp cresting where axle loads may be instantaneously transferred with possible overloads resulting.

VERIFICATION GUIDANCE

Comparison of the vehicle physical characteristics with the limit data presented in the appendix B is the initial step in the verification process. This establishes if the vehicle can be loaded straight in across the horizontally positioned ramp. Loading from the ground up the inclined ramp involves cresting at the hinge line. Without sufficient axle articulation, axle loads can shift at the crest point and cause an overloaded condition to exist until all axles are supported by the aircraft floor. If this condition exists the ATTLA should be contacted immediately for advice.

VERIFICATION LESSONS LEARNED

4.2.4.4.5 **Wheel/tire loads.** In addition to the requirements of 4.2.4.4.4, vehicles and other wheeled cargo shall not impose pneumatic tire loads or steel/hard rubber wheel loads in excess of the aircraft zone and compartment limitations for both flight and loading conditions. In addition, pneumatic tires shall not be loaded beyond their rated capacity at the selected inflation pressure. Tires with a solid inner (run flat) core are limited to the hard rubber wheel floor limitations.

REQUIREMENT RATIONALE (4.2.4.4.5)

Pneumatic tires impose a crushing load on the aircraft floor. Steel wheels, in theory, provide only line contact with the supporting area. Slight flexibility of both floor and wheel makes the contact a ribbon rather than a line,

Source: https://assist.dla.mil -- Downloaded: 2016-12-11T01:38Z
Check the source to verify that this is the current version before use.

but the weight on a steel wheel is still concentrated. Solid rubber wheels also often concentrate the load on a small area. Because steel and solid rubber wheels are essentially unyielding, high concentrated loads can easily be developed. A second consideration applies to pneumatic tires. Tires loaded beyond their rated capacity are subject to failure. Tires filled with a core material no longer spread the load under flight conditions as well as pneumatic tires due to smaller tire deflections.

REQUIREMENT GUIDANCE

Appendix B presents data for pneumatic tires as well as charts for steel and hard rubber wheels. Direct comparison of the loads and physical dimensions of the steel/hard rubber wheels with the appropriate limit data from the charts will indicate acceptablity of the wheels at shipment load values. Tire loads should not only fall within limits imposed by the aircraft manufacturer and shown in tables for each aircraft, but should also adhere to tire manufacturers' load limits as well. If it can be verified that the core filled tires adequately distribute the load for the load factors in 4.2.3.2, relief from this requirement is possible.

REQUIREMENT LESSONS LEARNED

Tires have tread which effectively reduces contact area. In cases of construction and rough terrain vehicles this reduction can be significant. To insure full floor contact, shoring equal in thickness to at least one-half of the tire groove width will be used. For example, if the tire has a groove between tread of two inches, any shoring used must have a thickness of at least one inch.

For C-130 and C-141B aircraft, pneumatic tires having an air pressure in excess of 100 psi must be considered as hard rubber wheels and treated accordingly.

Tire pressure will be maintained within the manufacturer's operating pressure range. At pressures lower than this, a danger exsists that the tire-to-rim seal may be broken with the possibility of sudden tire failure and damage to the aircraft.

5.2.4.4.5 **Wheel/tire loads verification.** Compliance with 4.2.4.4.5 requirements must be verified by comparing pneumatic tire loads or hard rubber/steel wheel loads of the item in its shipping configuration with the corresponding limit load values in appendix B. Items with tire/wheel loads that exceed the values shown in appendix B or are loaded beyond the manufacturer's recommended rated capacity shall be rejected.

VERIFICATION RATIONALE (5.2.4.4.5)

The method of verifying compliance with this requirement by direct comparison of loads and tire/wheel characteristics with published limit data is both adequate and cost effective.

Source: https://assist.dla.mil -- Downloaded: 2016-12-11T01:38Z
Check the source to verify that this is the current version before use.

VERIFICATION GUIDANCE

See guidance for 4.2.4.4.5.

VERIFICATION LESSONS LEARNED

For the C-130 and C-141B aircraft, pneumatic tires having an air pressure in excess of 100 psi must be considered hard rubber wheels and verification of acceptability must be based on these criteria.

4.2.4.4.6 Treadway/non-treadway loads. Equipment shall be designed to utilize the higher strength treadway sections of the aircraft floor/ramp whenever such design does not impair item performance. In all cases, loads imposed by such equipment shall not exceed limit loads for the aircraft zone and compartment under both loading and flight conditions.

REQUIREMENT RATIONALE (4.2.4.4.6)

The C-130 and C-141B aircraft have specially designed high strength cargo floor sections known as treadways. The entire floor of the C-5A is high strength and no specific treadway areas apply in this aircraft. The treadways are designed to accept greater loads and thus more effectively utilize the weight carrying capability of the aircraft. The width of the treadways makes them ideal for carrying a wide range of vehicles.

REQUIREMENT GUIDANCE

The location and dimensions of the treadways in the C-130 and C-141B are shown in plan views of the cargo compartments: appendix B, figure 44 and 30.3.1.4 respectively. While the entire floor of the C-5A can be considered of treadway strength, some differences between centerline loading and side-by-side loading of vehicles must be observed. Appendix B, figure 95 applies to the C-5 limits. Load values applicable to treadways and non-treadways are found in tabular data for each aircraft.

Treadway loads must be symmetrical about the aircraft centerline. Loads that extend beyond the treadways must be considered for limit purposes as being entirely on non-treadway surfaces.

REQUIREMENT LESSONS LEARNED

Source: https://assist.dla.mil -- Downloaded: 2016-12-11T01:38Z
Check the source to verify that this is the current version before use.

5.2.4.4.6 **Treadway/non-treadway loads verification.** The requirements of 4.2.4.4.6 shall be satisfied when it can be shown by analysis or measurement that the item, in its shipping configuration (including shoring when used) does not impose loads on the treadway/non-treadway sections of the aircraft floor/ramp in excess of the values shown in appendix B. Where the item imposes a load on both treadway and non-treadway sections, loads in excess of the value for the non-treadway area shall be cause for rejection. Failure to meet aircraft compartment limits for both loading and flight conditions shall also be cause for item rejection.

VERIFICATION RATIONALE (5.2.4.4.6)

The verification procedure is the simplest one which experience has shown will produce adequate proof of compliance.

VERIFICATION GUIDANCE

Comparison of the dimensions of the item's load bearing surfaces in contact with the cargo floor with the available treadway will show if the entire contact area lies within the treadway confines. If it does and the load imposed does not exceed treadway criteria, the load is satisfactory. If a portion of the load contact surface lies outside the treadway area, the entire load must be considered to be on the non-treadway portion of the cargo floor and nontreadway values apply. The C-5A does not have a special treadway area; instead, the entire floor is considered of uniform high strength.

VERIFICATION LESSONS LEARNED

4.2.4.4.7 **Shoring limitations.** Use of wood shoring for relief of overload conditions shall be avoided to the maximum extent possible. The design of all equipment which imposes unacceptable floor loadings under flight conditions shall incorporate integral devices to function as sleeper shoring. Normally such devices will not function to relieve excess on/offload forces.

REQUIREMENT RATIONALE (4.2.4.4.7)

Wood shoring provides a means of overcoming certain loading situations which might otherwise prevent an item from being airlifted. However, the use of shoring presents additional problems, such as cost, weight, increased loading time and availability at all loading sites. Too often shoring is viewed as a substitute for good design, when it should be used only when all other options have been exhausted. Item design should incorporate features which effectively eliminate the need for shoring with the possible exception of minimal floor protective shoring.

REQUIREMENT GUIDANCE

One of the largest requirements for shoring results from the need for sleeper shoring. Sleeper shoring is used to prevent movement of a vehicle due to gust

Source: https://assist.dla.mil -- Downloaded: 2016-12-11T01:38Z
Check the source to verify that this is the current version before use.

load or flight maneuver load conditions where the tires or suspension system cannot withstand G loads without failure or depression producing slack in tiedown devices. This can cause a whipping action on the tiedown device with potential failure. A tire or suspension failure could result in aircraft floor damage. This type of shoring is placed between the aircraft floor and a structural part of the vehicle, such as the frame or axles.

In many cases, adjustable devices can be made an add-on or integral part of the item to function as sleeper shoring and limit the item's movement under flight conditions. With appropriate design, the only shoring which would then be required would be protective floor shoring under the base of the device.

REQUIREMENT LESSONS LEARNED

All shoring must be provided by the shipper. In CONUS operations this can be enough of a problem, but in remote overseas locations such shoring is almost impossible to find. An integral device would always be with the item.

One of the biggest problems in airlift is aircraft turnaround time. The use of shoring is labor intensive and time consuming. An integral device would permit rapid application of the sleeper shoring principle.

5.2.4.4.7 **Shoring limitations verification.** This requirement shall be considered to be satisfied when analysis of the floor/ramp loads imposed by the integral sleeper shoring devices shows that the previous overload condition without their use has been relieved.

VERIFICATION RATIONALE (5.2.4.4.7)

If an item has an inherent flight overload problem which the use of sleeper shoring can relieve, such an item is a candidate for a design modification to overcome or reduce this problem. The measure of the effectiveness of such a device is to determine if it is at least equivalent functionally to the shoring necessary to relieve the problem. This can most easily be verified by load analysis to determine that the device or modification does cause the item to meet the criteria which it previously failed to meet.

VERIFICATION GUIDANCE

The function of sleeper shoring is to limit the vertical downward travel of an item under flight load conditions and to spread floor loads to an acceptable level. In many situations, this function can be accomplished through item modification either by redesign of the item structure or the addition of a device to perform the function of the shoring. When it has been established that a problem exists and its magnitude has been established, the extent of redesign or modification can be estimated. The appropriate solution should involve minimum changes which will provide the inherent capability to meet load criteria without the extensive use of shoring.

VERIFICATION LESSONS LEARNED

Source: https://assist.dla.mil -- Downloaded: 2016-12-11T01:38Z
Check the source to verify that this is the current version before use.

4.2.4.5 **Ramp hinge limits.** In addition to the requirements of 4.2.1.4, cargo items designed to be loaded from the ground up the inclined aircraft ramp shall not impose cresting loads in excess of the ramp hinge limits shown in appendix B.

REQUIREMENT RATIONALE (4.2.4.5)

The design characteristics of the various aircraft limit the ability of the ramp hinge to withstand loads imposed as items crest the ramp-hinge line entering or exiting the aircraft. This varies by aircraft and applies only to crest loads.

REQUIREMENT GUIDANCE

This requirement limits the maximum load the ramp hinge can withstand at the moment the item crests the hinge line. This limit applies to axle loads as well as linear loads and refers to the instantaneous loading that occurs at the moment of cresting.

REQUIREMENT LESSONS LEARNED

Where the action angle of bogie axles is less than the crest angle there will be a point during loading when the bogie axle load will shift to a single axle. Under these conditions a hinge overload can easily occur.

The C-130 hinge can withstand any total load as long as linear loading criteria are not exceeded. This does not apply to axle loads.

5.2.4.5 **Ramp hinge limits verification.** The requirements of 4.2.4.5 shall be met when it can be shown by analysis or measurement that the maximum load imposed by an item in its shipping configuration at the moment it crests the aircraft ramp does not exceed the limit value for the aircraft as shown in appendix B.

VERIFICATION RATIONALE (5.2.4.5)

Experience has shown that this requirement can be verified by analysis with the knowledge of the applicable load and the action angle of articulating members. Measurements and formal testing may be necessary if complex loading patterns are known or suspected.

VERIFICATION GUIDANCE

Verification can be accomplished by determining that the cresting loads do not exceed the aircraft limit levels. Simple comparison of loads with limit values is sufficient in most cases. Where bogie axles are involved and the possibility exists that load shifting at the crest point may occur, analysis must be performed to assure that the resultant loading does not overstress the hinge. If more complex loading situations are involved, consult the ATTLA as soon as possible for guidance.

Source: https://assist.dla.mil -- Downloaded: 2016-12-11T01:38Z
Check the source to verify that this is the current version before use.

VERIFICATION LESSONS LEARNED

4.2.4.6 Vehicle suspension limits. In addition to the requirements of 4.2.3.3, wheeled vehicles shall not impose forces on their suspension systems which exceed the military tactical (cross-country) rated capacity of the system or its commercial equivalent.

REQUIREMENT RATIONALE (4.2.4.6)

Military vehicles previously had two gross vehicle weight ratings. One rating was for highway service and the second was for cross-country (off highway) operation. The highway rating was essentially an overload condition which was permitted for operations on improved roads under mild shock and vibration conditions. The cross-country rating provided load carrying capability based on vehicle design for rough terrain operation where severe shock and vibration environments are encountered. Experience showed that operating vehicles at the highway rated capacity resulted in excessive maintenance costs and reduced vehicle life. Consequently, the Army now has a single vehicle load rating (tactical rating) at which the cross-country rating is equal to the highway rating; however, the vehicle speed is limited.

The cross-country scenario most closely approximates the environment a vehicle experiences in an aircraft under gust and flight maneuver loads. Experience has shown that military vehicles can be safely airlifted at gross weights not exceeding the cross-country rating.

Commercial vehicles do not have a similar rating. Because their gross vehicle weight rating is essentially an improved road rating, it is not satisfactory as an airlift criteria. Consult with the ATTLA for guidance on the weight carrying capacity of commercial vehicles.

REQUIREMENT GUIDANCE

A military vehicle which has an established tactical/cross-country rating can be carried safely in all aircraft at gross vehicle weights (GVWs) not exceeding this value provided all other aircraft limitations are met. The ATTLA will determine the acceptable GVW of all other vehicles including all commercial vehicles.

REQUIREMENT LESSONS LEARNED

Commercial vehicles generally have lighter duty suspension systems than military vehicles which are designed for more rugged service environments. This not only means that they are more subject to failure under flight load conditions with a high potential for aircraft damage, but they are also more prone to uncontrolled random movement which places greater stresses on tiedown devices.

Commercial vehicles are increasingly being used for military applications. Because these vehicles are not designed to have the inherent ruggedness the military environment requires, it would be prudent to procure these vehicles

Source: https://assist.dla.mil -- Downloaded: 2016-12-11T01:38Z
Check the source to verify that this is the current version before use.

with as rugged a suspension package as possible. The initial cost can be recovered many times over through the increased capability of the vehicle and reduced problems associated with aerial delivery. An option is to include load bearing stabilizing devices which function as sleeper shoring (see 4.2.4.4.7).

The earliest possible contact with the ATTLA is advised when commercial vehicles are being considered for use. This can often result in problem avoidance.

5.2.4.6 **Vehicle suspension limits verification.** This requirement has been met when the gross vehicle weight of the vehicle has been determined to be equal to or less than the published cross-country/tactical rated value or the ATTLA-determined value for those vehicles which do not have cross-country/ tactical ratings.

VERIFICATION RATIONALE (5.2.4.6)

Assurance that the actual GVW does not exceed the published value or that determined by cognizant authority is sufficient verification for this requirement. Maximum GVW values are set at levels which will assure safe loading and flight for the vehicles.

VERIFICATION GUIDANCE

Cross-country/tactical ratings are shown in the field manual or technical order for each military vehicle. Where no cross-country/ tactical rating for a vehicle has been established, 80 percent of the manufacturer's GVW rating shall be used to determine the maximum airlift weight of a vehicle. In addition, the C.G. of the vehicle shall be so located that no axle weight exceeds 80 percent of its maximum rated capacity.

VERIFICATION LESSONS LEARNED

4.2.5 **Flight induced environment**

4.2.5.1 **Shock and vibration.** Cargo items shall be designed or configured for transport to withstand, without loss of performance or serviceability, the shock and vibration environment encountered in aircraft flight and ground maneuvering operations or during cargo on/offloading.

REQUIREMENT RATIONALE (4.2.5.1)

This requirement is imposed to assure that functional damage to the item due to the flight environment is avoided to the maximum extent. Only the designer has knowledge of the structural ruggedness of the item and what shock and vibration levels the unprotected item can tolerate and still function satisfactorily. The purpose of this requirement is to make the designer aware of the airlift operations shock and vibration environment so that necessary protective measures can be applied to the item.

Source: https://assist.dla.mil -- Downloaded: 2016-12-11T01:38Z
Check the source to verify that this is the current version before use.

REQUIREMENT GUIDANCE

This requirement is intended to define the shock and vibration environment an item may experience during on/offloading and flight. Failure to provide item protection against these potential conditions could cause safety of flight problems. Another adverse effect expected would be failure of the item to function properly. With knowledge of the shock and vibration environment, the item designer would work with packaging personnel to assure item protection.

REQUIREMENT LESSONS LEARNED

Air Force Flight Dynamics Laboratory Technical Report 74-144 (AD B003792), C-5A Cargo Deck Low-Frequency Vibration Environment, February 1975 (limited access) provides data on levels of vibration - induced accelerations experienced on the flight deck during all phases of C-5A aircraft operations.

5.2.5 Flight induced environment verification

5.2.5.1 Shock and vibration verification. This requirement shall be met when analysis, demonstration, or formal testing of the items in their shipping configuration shows compliance with the requirements for shock and vibration testing of MIL-STD-810, Environmental Test Methods. In addition, cargo with suspension frequency modes between zero and 20 Hz must have sufficient damping verified by test, analysis, or demonstration.

VERIFICATION RATIONALE (5.2.5.1)

This standard establishes uniform environmental test methods for determining the resistance of equipment to the effects of natural and induced environments peculiar to military operations. It provides environmental test methods in order to obtain, as much as possible, reproducible test results.

VERIFICATION GUIDANCE

MIL-STD-810 Method No 514.3 for Vibration and Method No 516.3 for Shock are the appropriate test methods to determine compliance with the serviceability/performance portion of this requirement.

VERIFICATION LESSONS LEARNED

Source: https://assist.dla.mil -- Downloaded: 2016-12-11T01:38Z
Check the source to verify that this is the current version before use.

4.2.5.2 **Rapid decompression.** Cargo items shall be designed with pressure relief devices or shall be so configured for air shipment as to prevent any part from becoming a projectile in the event of catastrophic loss of aircraft cabin pressure.

REQUIREMENT RATIONALE (4.2.5.2)

The shipment of cargo by air presents a special potential problem not encountered during surface transport. That is the problem of rapid or explosive decompression of the cargo compartment. The three USAF prime mission cargo aircraft have automatically controlled cargo compartment pressurization systems which maintain compartment pressure at approximately 8.3 psi differential above outside air pressure when at flight altitude. If extremely rapid pressure loss should occur due to aircraft structural failure, it is possible that sealed items could explode under the influence of reduced external pressure. Parts of these items could become projectiles endangering crew members as well as the aircraft.

REQUIREMENT GUIDANCE

This problem is associated principally with well sealed containers which enclose large volumes of air such as vans, ISO containers, and shelters configured as shops, repair, and test facilities, etc. The effects of rapid decompression on the item can be mitigated by providing for controlled breathing to accommodate air flow due to pressure changes or the use of devices to permit safe relief of an 8.3 psi pressure build-up within 0.5 sec. The intent of this requirement is to assure that this potential problem is considered in item design and provisions made to accommodate rapid decompression if the item will be adversely affected by it.

REQUIREMENT LESSONS LEARNED

Most commercial vans, containers, and shelters are designed for surface movement where rapid decompression is not a factor. When such containers are used for military purposes where airlift is anticipated, provisions for attenuation of the potential damage due to decompression must be made.

Some commercial containers are designed to permit air to enter/exit the interior due to pressure changes. In general these passages are not designed to accommodate rapid decompression.

5.2.5.2 **Rapid decompression verification.** Compliance with this requirement shall be verified by analysis or formal testing which confirms that the test item can withstand an internal pressure differential of 8.3 psi developed in 0.5 sec or less without any part of the item becoming a missile.

VERIFICATION RATIONALE (5.2.5.2)

The inherent design features and ruggedness of some items may be sufficient to withstand the effects of rapid decompression without modification. Where it can be shown by engineering analysis that this is the case, such analytical

Source: https://assist.dla.mil -- Downloaded: 2016-12-11T01:38Z
Check the source to verify that this is the current version before use.

proof shall be adequate to verify compliance with this requirement. The alternative is dynamic testing of the item in its shipping configuration under the worst case conditions stated above and inspection of the item to determine no parts have become a missile.

VERIFICATION GUIDANCE

Where it can be shown analytically, using accepted engineering practices, that the subject item can withstand rapid decompression under the conditions of 5.2.5.2, this shall constitute compliance with the requirements of 4.2.5.2. In all other cases formal testing shall be accomplished to verify compliance.

VERIFICATION LESSONS LEARNED

4.2.6 Special handling

4.2.6.1 Hazardous materials. Where equipment is capable of carrying or having attached to itself hazardous materials, the containment or packaging of these materials shall meet the requirements of AFR 71-4/TM 38-250/ NAVSUP PUB 505/MCO P4030.19/and DLAM 4145.3, or Title 49, Parts 100-199, Code of Federal Regulations. The containment, packaging, or other preparation of these materials shall be performed and certified such that they do not jeopardize the safety of cargo handlers, flight crews, or the aircraft.

REQUIREMENT RATIONALE (4.2.6.1)

Certain materials which make up components of equipment items, are used in support of equipment operations, or can be carried aboard equipment as an accompanying load represent potential safety hazards to flight personnel and aircraft. In order to reduce the risk of air transporting these materials to an acceptable level, consistent with operational needs, specific preparation procedures have been developed. These required procedures and the conditions governing their application are detailed in Joint Service Publication AFR 71-4/TM 38-250/NAVSUP PUB 505/MCO P4030.19/DLAM 4145.3.

REQUIREMENT GUIDANCE

All pertinent requirements of AFR 71-4 must be met in air transportability situations. Detailed information regarding procedures to be followed for each hazard is provided in this publication. No deviations from these procedures are acceptable unless specifically authorized by official waiver.

REQUIREMENT LESSONS LEARNED

Source: https://assist.dla.mil -- Downloaded: 2016-12-11T01:38Z
Check the source to verify that this is the current version before use.

5.2.6 Special handling verification

5.2.6.1 Hazardous materials verification. This requirement shall be met when the hazardous item(s) have been certified as meeting packaging requirements by the issuance of a DD Form 1387-2, Special Handling Data/Certification, by a qualified certifier.

VERIFICATION RATIONALE (5.2.6.1)

Because of the complex nature of and potential danger in hazardous materials, verification of their proper preparation for air shipment must be accomplished by personnel qualified under the provisions of AFR 71-4. Normally, specialists familiar with specific items will prepare them for shipment and certify that they meet the requirements for air transport. The advantage of this is that such specialists are more knowledgeable about the characteristics of the item and its potentially hazardous elements. Of primary importance are the qualifications of the certifying personnel to assure that the required air transport safety standards have been met. Air terminal personnel, also qualified under AFR 71-4 standards, will inspect the load prior to its acceptance for air transport, thus providing a secondary check on the unit's proper preparation for shipment.

VERIFICATION GUIDANCE

This requirement has been met when a qualified certifier attests to the adequacy of hazardous materials preparation by executing DD Form 1387-2, Special Handling Data/Certification. The provisions of AFR 71-4 pertinent to the hazard must be complied with unless an official deviation/waiver is obtained.

VERIFICATION LESSONS LEARNED

Lessons learned to be added as acquired.

4.2.6.2 In-flight requirements. Where cargo items require maintenance of special in-flight conditions such as venting of hazardous materials, auxiliary power, or controlled cargo compartment temperatures, their design shall incorporate the necessary hardware to interface properly with the aircraft installed facilities.

REQUIREMENT RATIONALE (4.2.6.2)

Most cargo can be air transported without any special facilities being required to maintain item condition or characteristics. However, certain special loads do require in-flight utilities such as venting facilities, power sources, or controlled cargo compartment temperatures. When these requirements exist, it is the responsibility of the program office to assure that the necessary, interfacing hardware is a part of the item's configuration.

Source: https://assist.dla.mil -- Downloaded: 2016-12-11T01:38Z
Check the source to verify that this is the current version before use.

REQUIREMENT GUIDANCE

In appendix B there is a separate section for each cargo aircraft which provides general information about facilities available on each type aircraft. If more specific information is needed, contact the ATTLA.

REQUIREMENT LESSONS LEARNED

5.2.6.2 **In-flight requirements verification.** Compliance with this requirement shall be verified on an individual case basis by inspection of item hardware to assure compatibility with aircraft facilities in use at the time the airlift requirement exists.

VERIFICATION RATIONALE (5.2.6.2)

This is the only practical way to verify compliance when you are dealing with aircraft equipment which is subject to random and unspecified modification.

VERIFICATION GUIDANCE

At the time the specific information about the aircraft's configuration is obtained, information about interfacing hardware requirements will be provided. Verification of compliance with this requirement is a matter of inspecting the item interfacing hardware and comparing it with its mating aircraft installed counterpart.

VERIFICATION LESSONS LEARNED

4.2.7 **Marking.** Equipment shall be marked in accordance with the provisions of MIL-STD-129 and MIL-STD-209, as appropriate, to provide the information necessary to facilitate loading and restraining the item in the aircraft. Unless otherwise specified, the marking shall be stenciled in an appropriate location or provided on the vehicle data plate. Marking shall include at least the following:

4.2.7.1 **Tiedown provisions.** Tiedown attachments or fittings shall be identified, and the allowable load shall be indicated, and a representative tiedown grid pattern shall be proposed for aircraft as defined in the order or contract. If no aircraft is defined in the order or contract, the tiedown grid pattern shall be proposed for both the C-130 and C-141B aircraft. This does not apply to equipment that meets the requirements of 3.3.1.6.

4.2.7.2 **Shipping weight and center-of-gravity location.** The shipping weight of the equipment in an air transportable condition shall be marked in a conspicuous location. The center-of-gravity along each axis influencing the method of loading and tiedown shall be marked on the item.

Source: https://assist.dla.mil -- Downloaded: 2016-12-11T01:38Z
Check the source to verify that this is the current version before use.

4.2.7.3 Hoisting fittings. When equipment or cargo is to be hoisted onto an aircraft or onto a pallet or platform, the hoisting fittings shall be identified and the required hoisting capacity marked. The locations where forklifts may be applied shall be identified.

4.2.7.4 Other markings. Other markings shall be provided to cover the following, where applicable:

a. Instructions for retraction of wheels or casters to provide greater bearing surface or clearance.

b. Installation of special struts or braces to meet flight loads.

c. Orientations in aircraft when critical.

d. Instructions for special servicing or other preparation for air shipment.

e. Other precautions to be observed during on/offloading and flight.

REQUIREMENT RATIONALE (4.2.7)

Adequate marking of items to be airlifted is necessary to provide information on loading techniques, weight, and balance data for positioning the item within the aircraft and tiedown fitting data for determining restraint device requirements. Special preparation or servicing instructions may be included in the marking, as appropriate. By marking these data and instructions permanently on the item, they are readily available at the time of loading and will provide the necessary information to loading personnel to enable them to safely load and restrain items with which they have had no previous experience. Such data also eliminates questions regarding the capability of equipment components because ratings are established by knowledgeable design personnel.

REQUIREMENT GUIDANCE

Visual inspection of the item will verify compliance with the marking requirements. Determination of the accuracy of the data displayed on the item may be made by engineering analysis or actual test for such items as centers of gravity and strength of tiedown and hoisting fittings. Instructional markings can be verified by attempting the procedure and comparing actual results with predicted results.

REQUIREMENT LESSONS LEARNED

Where special instructions are required to prepare an item for air transport, such instructions should be coordinated with the ATTLA to assure that the proposed procedures are acceptable in all appropriate air transport situations.

Tiedown fittings and other attachment points must meet the strength, number, and location criteria of 4.2.3.1.

Source: https://assist.dla.mil -- Downloaded: 2016-12-11T01:38Z
Check the source to verify that this is the current version before use.

5.2.7 Marking verification. Compliance with the requirements of 4.2.7 and subparagraphs 4.2.7.1 through 4.2.7.4 shall be verified by inspection of markings and comparison with the standards set forth in MIL-STD-129 or MIL-STD-209, as appropriate.

VERIFICATION RATIONALE (5.2.7)

In general, verification can be performed through visual inspection of the item markings. This alone does not insure the validity of the information presented. However, verification of the hardware characteristics of the item is required by other sections of this standard. Comparison of the markings with these results will assure the accuracy of the markings. Where special servicing or preparation is necessary to make the item ready for airlift, certification of procedure acceptability based on analysis or actual demonstration is usually accomplished prior to final acceptance of the item. Comparison of the validated procedure with the instructional markings will serve as verification.

VERIFICATION GUIDANCE

The most difficult requirements to verify involve the special servicing and preparation instructions. This is basically associated with the quality and completeness of the instructions. The directions are usually written by persons thoroughly familiar with the item, but must be used by persons who may never have seen the item before. In these situations it is all too easy for the writer to assume a higher level of user knowledge than actually exists. This often results in directions which are incomplete or confusing to follow. Use of the proposed instructions by unfamiliar personnel to accomplish the procedure should determine the adequacy of the instructions. In many cases this step is a contractual requirement tied to a maximum time permitted to accomplish this.

VERIFICATION LESSONS LEARNED

4.3 Airdrop requirements. The item being developed for airdrop shall comply with the following detailed requirements for the specified standard mode(s) of airdrop.

REQUIREMENT RATIONALE (4.3)

The item is subjected to different environments for airdrop versus air transportability, and therefore there are specific airdrop requirements for extraction, recovery and ground impact.

REQUIREMENT GUIDANCE

The airdrop requirements in this standard cover standard modes of airdrop (i.e., door bundle, ramp bundle, low velocity platform airdrop, and LAPES) from current cargo airdrop aircraft (i.e., C-130 and C-141). Adherence to the

Source: https://assist.dla.mil -- Downloaded: 2016-12-11T01:38Z
Check the source to verify that this is the current version before use.

criteria in this section will allow a piece of equipment to be airdrop certified for the required mode of airdrop using standard field airdrop rigging equipment (e.g., airdrop platforms, force transfer devices, A-22 containers, etc.). If there is a requirement to use a nonstandard means of airdropping a piece of equipment, recommend ASD/ENECA WPAFB OH and USA Natick Research and Development Center/STRNC-UAS be contacted to assist in developing specific requirements.

REQUIREMENT LESSONS LEARNED

4.3.1 Air transport environment. The airdrop item shall comply with the air transportability requirements in 4.2.3.2, 4.2.3.3, 4.2.4.3, 4.2.5, and 4.2.6.

REQUIREMENT RATIONALE (4.3.1)

See rationale for the requirements specified.

REQUIREMENT GUIDANCE

Not applicable.

REQUIREMENT LESSONS LEARNED

See lessons learned for the requirements specified.

5.3 Airdrop verification

5.3.1 Air transport environment verification. Compliance with the requirements of 4.4.1 shall be in accordance with the verification requirements in 5.2.3.2, 5.2.3.3, 5.2.4.3, 5.2.5, and 5.2.6.

VERIFICATION RATIONALE (5.3.1)

See rationale for 5.2.3.2, 5.2.3.3, 5.2.4.3, 5.2.5, and 5.2.6.

VERIFICATION GUIDANCE

See guidance for 5.2.3.2, 5.2.3.3, 5.2.4.3, 5.2.5, and 5.2.6.

VERIFICATION LESSONS LEARNED

Source: https://assist.dla.mil -- Downloaded: 2016-12-11T01:38Z
Check the source to verify that this is the current version before use.

4.3.2 Item provisions

4.3.2.1 Tiedown provisions. The item shall be provided with tiedown provisions in accordance with the requirements for airdrop in MIL-STD-814, paragraph 5.1.

REQUIREMENT RATIONALE (4.3.2.1)

Tiedown provisions are required when the item airdrop weight is 1170 pounds or above. For an item that has an airdrop weight less than 1170 pounds, no tiedown provisions are required. Current procedures for mass supply loads can be utilized. For an item that has an airdrop weight of 1170 pounds or greater, item tiedown provisions are required to restrain the item to the airdrop platform during inflight, ejection, and recovery. Failure of tiedown provisions could result in item separation from the airdrop platform and thereby damage the aircraft and item and endanger the aircrew during inflight, ejection, and recovery. The tiedown provisions must properly interface with the standard tiedown strap assemblies. The requirements for numbers, strength, and interface of tiedown provisions are provided in MIL-STD-814, paragraph 5.1 and take into account inflight, ejection, and recovery loads. Criteria in MIL-STD-814 implements international standards ASCC Air Standard 44/21 and NATO STANAG 3548TN.

REQUIREMENT GUIDANCE

Tiedown provisions are required for low velocity platform airdrop or LAPES, and when the airdrop weight is 1170 pounds or greater. The diameter and shape of the tiedown provision affects the efficiency of the tiedown strap (webbing) strength. Since tiedown provisions are used with chains (air transport) and webbing straps (air drop), the provision hardness should be greater than Rockwell "C"35 to prevent burring and gouging.

REQUIREMENT LESSONS LEARNED

5.3.2 Item provisions verification

5.3.2.1 Tiedown provisions verification. Compliance with the requirements of 4.3.2.1 shall be determined as follows. Provisions shall be identified. Measurements of the provisions' required dimensions within an acceptable accuracy shall be made. Analysis of the provision's capability, e.g., limit load and ultimate loads shall be provided for the required range of loadings. Analysis shall include the strength of the attachment. Results of static pull tests of the provisions attached to the item to the limit load can be submitted in lieu of analysis. Line of force for the static pull tests shall be applied at the most critical condition within the required range of applied forces. Where provisions are attached to the main item by welds, the integrity of the welds shall be verified by non-destructive testing or static pull tests to the limit load as described above.

Source: https://assist.dla.mil -- Downloaded: 2016-12-11T01:38Z
Check the source to verify that this is the current version before use.

VERIFICATION RATIONALE (5.3.2.1)

The provisions used for tiedowns must be identified to determine if adequate numbers of provisions are provided. Measurements of the provisions are required to check the manufacturing and assembly processes adherence to the design criteria and to insure that the provisions will be compatible with tiedown assemblies. Either an analysis or testing of the type of provision is required to insure that the provision can withstand the working or limit load, and to check the manufacturing and assembly process adherence to the design criteria. To minimize the number of pull tests required for verification, the most critical loading for the full range of required loadings should be applied to the tiedown provision.

VERIFICATION GUIDANCE

Not applicable.

VERIFICATION LESSONS LEARNED

4.3.2.2 Extraction provision. The item shall be provided with extraction provision(s) in accordance with requirements for airdrop in MIL-STD-814, paragraph 5.3.

REQUIREMENT RATIONALE (4.3.2.2)

Extraction provision(s) are required when there is a requirement for item extraction or the item airdrop weight is 14,100 pounds or above for low velocity platform airdrop or 19,900 pounds or above for LAPES. For an item that has an airdrop weight less than 14,100 pounds, for low velocity platform airdrop or 19,900 pounds or below for LAPES, no extraction provisions are required. Current procedures for platform extraction can be utilized. The extraction provision(s) must be capable of withstanding the maximum potential extraction parachute force. Failure of an extraction provision could result in damage to the recovery system, the item, and the aircraft, and endanger the aircrew. The extraction provisions must be designed to properly interface with standard extraction systems, including force-transfer devices. The requirements for extraction provision(s) strength and interface are provided in MIL-STD-814, paragraph 5, and take into account the maximum potential extraction parachute forces. Criteria in MIL-STD-814 implements international standard ASCC Air Standard 44/21.

REQUIREMENT GUIDANCE

Extraction provisions are required for low velocity platform airdrop when the airdrop weight is greater or equal to 14,100 pounds and for LAPES when the airdrop weight is greater or equal to 19,900 pounds.

Source: https://assist.dla.mil -- Downloaded: 2016-12-11T01:38Z
Check the source to verify that this is the current version before use.

REQUIREMENT LESSONS LEARNED

On the early versions of the M-561, the extraction system was attached to the vehicle bumper. Upon deployment of the extraction parachute, the bumper attachment failed, premature force-transfer occurred, the recovery parachutes deployed, the vehicle separated from the platform, and exited the aircraft. The result was the loss of the vehicle and minor aircraft damage.

The M-551 Armored Reconnaissance Airborne Attack Vehicle (ARAAV) was rigged for LAPES item extraction using four extraction provisions, i.e., two towing shackles and two lifting provisions. One extraction sling was attached to the shackle and provision on one side, and the second extracion sling was attached in a similar manner on the other side. Upon deployment of the extraction parachutes, the towing shackle failed on one side. The extraction force was thus transferred to only one side of the vehicle. Extraction was normal; however, upon ground impact, the rigged load yawed due to the offset extraction force, causing the rigged vehicle to tumble. The airdrop platform was damaged, and minor damage to the vehicle was incurred. Safety factors above the limit load were not adequate.

5.3.2.2 **Extraction provision verification.** Compliance with requirements of 4.3.2.2 shall be determined as follows. Provisions shall be identified. Measurements of the provision's required dimensions within an acceptable accuracy shall be made.

The provision attached to the item shall be subjected to a static test load equivalent to 1.4 times the limit load requirement within ±5 degrees of horizontal. Results of static testing on vehicles with the same attachment of the same type of provision and the equivalent item structural capability can be submitted in lieu of actual testing. However, where provisions are attached by welds, the integrity of the welds shall be verified by non-destructive testing or static pull tests to the limit load as described above.

VERIFICATION RATIONALE (5.3.2.2)

The provisions used for tiedowns must be identified to determine if adequate numbers of provisions are provided. Measurements of the provisions are required to check the manufacturing and assembly process adherence to the design criteria and to insure that the provisions will be compatible with the standard extraction force-transfer devices. In general, there is only one extraction provision. Because of this fact, and the criticality of an extraction provision failure prior to the item exiting the aircraft, more stringent verification has been required for the extraction provision than for the tiedown provisions, although both the extraction provision and the set of tiedown provisions have approximately the same extraction force transmitted through them. The quality control on welds is important, and for that reason verification of the actual weld strength is required.

VERIFICATION GUIDANCE

Not applicable.

Source: https://assist.dla.mil -- Downloaded: 2016-12-11T01:38Z
Check the source to verify that this is the current version before use.

VERIFICATION LESSONS LEARNED

4.3.2.3 **Item suspension provisions.** The item shall be provided with suspension provisions in accordance with the requirements for airdrop in MIL-STD-814, paragraph 5.2.

VERIFICATION RATIONALE (4.3.2.3)

Suspension provisions are required on all items that have an airdrop weight of 1170 pounds or greater. For an item that has an airdrop weight less than 1170 pounds, no suspension provisions are required. Current procedures for rigging mass supply loads and other items using platform suspension can be utilized. The suspension provisions must be capable of withstanding the maximum potential recovery parachute(s) force. Failure of suspension provisions could result in the loss of the item. The suspension provisions must be designed to properly interface with standard recovery systems for low velocity platform airdrop. The requirements for suspension provisions strength and interface are provided in MIL-STD-814, paragraph 5.2, and take into account the maximum recovery parachute forces. Criteria in MIL-STD-814 implements international standard ASCC Air Standard 44/21.

VERIFICATION GUIDANCE

Suspension provisions are required for low velocity platform airdrop when the airdrop weight is 1170 pounds or greater. USA Natick Research and Development Center, Natick, MA (STRNC-UAS) is the office of engineering responsibility for recovery and suspension systems and can provide guidance if required.

VERIFICATION LESSONS LEARNED

5.3.2.3 **Item suspension provision verification.** Compliance with the requirement of 4.3.2.3, Item Suspension Provision, shall be in accordance with the same verification requirements in 5.3.2.1 with the exception that the static pull test shall be to a minimum of 1.25 times the limit load.

VERIFICATION RATIONALE (5.3.2.3)

See rationale in 5.3.2.1. The verification requirement for the pull test to 1.25 times the limit load is dictated by USA Natick R&D Center, Natick, MA (STRNC-UAS).

Source: https://assist.dla.mil -- Downloaded: 2016-12-11T01:38Z
Check the source to verify that this is the current version before use.

VERIFICATION GUIDANCE

Not applicable.

VERIFICATION LESSONS LEARNED

4.3.2.4 Emergency aft restraint provisions. The item shall be provided with emergency aft restraint provisions in accordance with requirements in MIL-STD-814, 5.6.

REQUIREMENT RATIONALE (4.3.2.4)

A procedure for securing the rigged item to the aircraft cargo compartment is required in case of a malfunctioned extraction parachute system. Upon securing the rigged item, the loadmaster, going aft of the rigged item, cuts the extraction line, thereby jettisoning the extraction system. This procedure is used when the aircraft is capable of towing the extraction parachute. Otherwise, the rigged item is jettisoned, as in the case of LAPES, for all extraction parachute configurations and C-130 low velocity platform airdrop for a cluster of two 28-foot extraction parachutes. The C-130 aircraft cannot tow a cluster of two 28-foot extraction parachutes.

The total restraint through the provisions must be capable of withstanding the towed extraction parachute drag force at the airdrop airspeed with adequate confidence that the loadmaster can safely walk aft of the load. There are standard operational procedures contained in the appropriate TO 1C-XXX-9 loading manual for the number and type of aircraft tiedowns used for the emergency condition. The size and number of provisions on the item must be compatible with these operational procedures. The requirements for numbers, strength and interface of these provisions are provided in MIL-STD-814, paragraph 5.6 and take into account the maximum standard extraction parachute force.

REQUIREMENT GUIDANCE

The emergency aft restraint provisions are required for low velocity platform airdrop and when the airdrop weight is between 6045 and 30,000 pounds. Lifting, suspension, towing, and tiedown provisions can be used in a dual role as primary provisions and emergency aft restraint provisions since they are used independently.

REQUIREMENT LESSONS LEARNED

Source: https://assist.dla.mil -- Downloaded: 2016-12-11T01:38Z
Check the source to verify that this is the current version before use.

5.3.2.4 Emergency aft restraint provisions verification. Compliance with the requirements of 4.3.2.4 shall be in accordance with MIL-STD-814, paragraph 5.7.5.

VERIFICATION RATIONALE (5.3.2.4)

Identification and measurement of the provisions are required to insure that the provisions will be compatible with the number of tiedowns required. Either an analysis or testing of the type of provision is required to insure that the provision can withstand the working or limit load. Since a load-master must walk between the load restrained by these restraint provisions and a potentially inflated extraction parachute, the integrity of the welds is paramount; therefore, there is more stringent verification requirement than other methods of attaching the provisions. For items which are platform extracted and in which the airdrop weight is less than 6045 pounds (i.e., 8000 pounds rigged weight), there are standard operating procedures for providing emergency aft restraint to the rigged item via the airdrop platform regardless of which aircraft (C-130 or C-141) is used, and therefore, there is no need for item provisions.

VERIFICATION GUIDANCE

Not applicable.

VERIFICATION LESSONS LEARNED

In the past, item development programs have not considered emergency aft restraint provisions and this was acceptable because the items were on the lower end of the weight range, and tiedown, towing, and suspension provisions always provided adequate points of attachment. However, the larger items now being developed do not always have adequate emergency aft restraint provision capability in these provisions.

4.3.3 Item weight

4.3.3.1 Door bundle weight. The item suspended weight shall not exceed 500 pounds.

REQUIREMENT RATIONALE (4.3.3.1)

This requirement is established to insure the rigged item remains intact during the recovery phase. The recovery parachutes are designed for a maximum of 500 pounds suspended load, and this criteria governs the maximum rigged weight of a door bundle. The aircraft jump platform and the bundle container are approaching their limit at 500 pounds.

REQUIREMENT GUIDANCE

The weight of the ancillary airdrop equipment minus the recovery parachute weight must be considered in determining the suspended weight.

Source: https://assist.dla.mil -- Downloaded: 2016-12-11T01:38Z
Check the source to verify that this is the current version before use.

REQUIREMENT LESSONS LEARNED

5.3.3 Item weight verification

5.3.3.1 Door bundle weight verification. Compliance with the requirements of 4.3.3.1 shall be determined by measurement of the item's suspended weight on certified scales.

VERIFICATION RATIONALE (5.3.3.1)

Preliminary data using computed suspended weight is acceptable for planning; however, the item must be weighed on a scale prior to any airdrop test to insure that the rigged configuration will be within the recovery parachute capability, and to verify any computational suspended weight.

VERIFICATION GUIDANCE

The suspended weight is the rigged weight minus the recovery parachute system.

VERIFICATION LESSONS LEARNED

4.3.3.2 Ramp bundle weight. The item suspended weight shall not exceed 2200 pounds. The total weight of the rigged item shall not exceed 1500 pounds when the C-130 ramp bundle delivery system is to be used.

REQUIREMENT RATIONALE (4.4.3.2)

The 2200-pound limit requirement is established to insure that the rigged item remains intact during the recovery phase. The A-22/A-23 container is designed to withstand the maximum G-12 and 26-foot high velocity parachute forces which are developed with a maximum suspended weight of 2200 pounds. This criteria governs the maximum weight of a ramp bundle. The C-130 ramp bundle delivery system (WEDGE) requirement is established to insure that the rigged item can be restrained to the aircraft airdrop kit for 0.5 g after in-flight restraint has been removed and prior to airdrop release. The attachment of the release plate to the bundle delivery system aircraft airdrop kit is the limiting factor.

REQUIREMENT GUIDANCE

Ramp bundles include container delivery system (CDS), C-130 ramp bundle delivery system (WEDGE), and over-the-ramp operations. For CDS and over-the-ramp operations, the weight of the ancillary airdrop equipment minus the recovery parachute weight must be considered in determining the suspended

Source: https://assist.dla.mil -- Downloaded: 2016-12-11T01:38Z
Check the source to verify that this is the current version before use.

weight. For C-130 ramp bundle delivery system (WEDGE), the weight of all ancillary equipment, including the recovery parachute weight, must be considered in determining the rigged weight. Total cargo weight on the C-130 ramp bundle delivery system (WEDGE) is 3734 pounds.

REQUIREMENT LESSONS LEARNED

A maximum of 3734 pounds of cargo can be loaded on the C-130 bundle delivery system because of the 5000-pound ramp limit and the 930-pound bundle delivery system aircraft airdrop kit and 335 pounds of ancillary aircraft ramp cargo handling system components.

5.3.3.2 Ramp bundle weight verification. Compliance with 4.3.3.2 shall be determined by measurement of the rigged or suspended item on certified scales.

VERIFICATION RATIONALE (5.3.3.2)

Preliminary data using computed rigged weight is acceptable for planning; however, the item must be weighed on a certified scale prior to any airdrop test or qualification to insure that rigged configuration will be within the operating limits and to verify any computational rigged weights.

VERIFICATION GUIDANCE

Not applicable.

VERIFICATION LESSONS LEARNED

4.3.3.3 Low velocity platform airdrop weight. The item rigged weight shall not exceed 35,000 pounds.

REQUIREMENT RATIONALE (4.3.3.3)

The operational single-unit airdrop capability of the C-130 and C-141 aircraft is 35,000 pounds gross rigged weight per the applicable T01C-XXX-9 loading manual. This limit was applied to the two aircraft because of the airframe structural and stability and control capability under flight conditions and operational pilot proficiencies.

REQUIREMENT GUIDANCE

The item should be designed to an airdrop weight not to exceed 30,000 pounds to insure that the rigged weight does not exceed the airdrop aircraft single unit airdrop limit. The remaining weight would consist of ancillary airdrop equipment required to rig the item for airdrop. MIL-STD-814, table V, provides weight of recovery parachutes for various airdrop weights. This includes the Type II airdrop platform. If the Type V airdrop platform is

Source: https://assist.dla.mil -- Downloaded: 2016-12-11T01:38Z
Check the source to verify that this is the current version before use.

required, further reduction in airdrop weight would be required due to the heavier platform. The platform weight difference is 67 pounds per running foot. Minimum reduction in operational configuration should be considered in meeting the weight requirements so that the item is in a relatively operational or combat-ready condition.

REQUIREMENT LESSONS LEARNED

5.3.3.3 Low velocity platform airdrop weight verification. Compliance with requirement 4.3.3.3 shall be determined by measurement of the item airdrop weight on certified scales.

VERIFICATION RATIONALE (5.3.3.3)

Preliminary data using computed airdrop weight is acceptable for planning, however, the item must be weighed on a scale prior to any flight testing to insure that the rigged configuration will be acceptable, and to verify the computational airdrop weights.

VERIFICATION GUIDANCE

Note, the airdrop weight is the weight of the item in its reduced configuration for airdrop, including external and internal loads.

VERIFICATION LESSONS LEARNED

Lessons learned to be added as acquired.

4.3.3.4 LAPES weight. The item rigged weight shall not exceed 35,000 pounds.

REQUIREMENT RATIONALE (4.3.3.4)

The operational single-unit LAPES airdrop capability of the C-130 aircraft is 35,000 pounds gross rigged weight per the applicable TO 1C-130A-9 loading manual. This limit was applied to the C-130 because of the airframe structural and stability and control capability under flight conditions and operational pilot proficiency. In order not to exceed the 35,000 pounds, the airdrop weight cannot exceed 33,000 pounds. The remaining weight would consist of ancillary airdrop equipment required to rig the item, including the A/E29H-1 airdrop platform.

The gross rigged weight for LAPES differs from that for low velocity platform airdrop because of the ground effect, higher extraction ratio, and the different usage rate. The airdrop weights for LAPES differ from those for low velocity platform airdrop because of the heavier platforms, increase in the number of tiedown assemblies, and omission of the recovery system.

Source: https://assist.dla.mil -- Downloaded: 2016-12-11T01:38Z
Check the source to verify that this is the current version before use.

REQUIREMENT GUIDANCE

The item should be designed to an airdrop weight not to exceed 33,000 pounds to insure that the rigged weight does not exceed the airdrop aircraft single unit airdrop limit. The remaining weight would consist of ancillary airdrop equipment required to rig the item for airdrop, including either the A/E29H-1 or Type V airdrop platform. Minimum reduction in operational configuration should be considered in meeting the airdrop weight requirements so that the item is in a relatively operational or combat ready condition.

REQUIREMENT LESSONS LEARNED

5.3.3.4 **LAPES weight verification.** Compliance with requirement 4.3.3.4 shall be in accordance with the same verification requirements as in 5.3.3.3.

VERIFICATION RATIONALE (5.3.3.4)

See rationale for 5.3.3.3.

VERIFICATION GUIDANCE

Not applicable.

VERIFICATION LESSONS LEARNED

4.3.4 **Dimensional limits**

4.3.4.1 **Door bundle dimensional limits.** The rigged door bundle dimensions shall not exceed 48 inches length by 30 inches width by 66 inches height, including the attached recovery parachute system.

REQUIREMENT RATIONALE (4.3.4.1)

The C-130 and C-141 aircraft paratroop door dimensions are 36 inches by 72 inches. A minimum clearance of two inches is required on each side. On the C-141, the paratroop door air deflector hinges extend two inches into the door opening. The operational width limit of the door bundle is 30 inches to insure compatibility with both aircraft. The length and height dimensional limits are established together to provide clearance when sliding and rotating the door bundle out the paratroop door. The length of the door bundle is also limited because of the method of ejecting the door bundle. As the door bundle is pushed out, the drag on the portion of the bundle extending beyond the aircraft air deflector will yaw the bundle with the potential for jamming the door bundle against the door jams.

Source: https://assist.dla.mil -- Downloaded: 2016-12-11T01:38Z
Check the source to verify that this is the current version before use.

Standard operating rigging procedures in FM 10-501/TO 13C7-1-11 require the use of the standard parachutes and the additional material for high velocity airdrop.

REQUIREMENT GUIDANCE

The height of the rigged item is affected by the fragility of the item, the mode of airdrop (i.e., high- or low-velocity), and the size of the airdrop item. Refer to 4.3.6 for assistance in determining thickness of energy dissipating material. The dimensions of the door bundle recovery parachute mounted on top are:

Parachute	Dimensions (inches) (Length x width x height)
G-14 (low velocity)	16 x 15 x 13
12-ft ring slot (high velocity)	14 x 10 x 5

Note: A 3/4-inch skidboard and up to 12-inch thick energy dissipating material, depending upon the fragility of the item, is normally included in the maximum height dimension.

REQUIREMENT LESSONS LEARNED

5.3.4 Dimensional limits verification

5.3.4.1 Door bundle dimensional limits verification. Compliance with requirement 4.3.4.1 shall be determined by rigging the item in accordance with FM 10-501/TO 13C7-1-11 and measuring the rigged item height, width and length.

VERIFICATION RATIONALE (5.3.4.1)

Preliminary data using computed rigged dimensions are acceptable for planning; however, the item must be measured prior to any flight testing to insure that the rigged configuration will be acceptable, and to verify the computational airdrop dimensions.

VERIFICATION GUIDANCE

Not applicable.

VERIFICATION LESSONS LEARNED

Source: https://assist.dla.mil -- Downloaded: 2016-12-11T01:38Z
Check the source to verify that this is the current version before use.

4.3.4.2 Ramp bundles dimensional limits

4.3.4.2.1 Container delivery system dimensional limits. The item shall not exceed 53.5 inches in width, 96 inches in length and 83 inches in rigged height.

REQUIREMENT RATIONALE (4.3.4.2.1)

The requirement is established to differentiate between the methods of delivering bundles over the aircraft ramp and to provide the criteria for the container delivery system (CDS). The 53.5-inch width limit was established to insure that the rigged A-22 container can be positioned aside another A-22 container and allow both containers to exit simultaneously and safely. The 53.5-inch width with a normal length approaches the physical limits of the A-22 container. The C-130 aircraft minimum width opening for airdrop is 115.8 inches, while that for the C-141 aircraft is 123.25 inches. No studies or tests have been conducted beyond the 53.5-inch width limit per container with side-by-side containers. Wider A-22 containers may require using a single row of containers and thereby reduce the airlift capability of the aircraft. The 96-inch length limit was established by current standard rigging procedures. Presently, there are procedures for rigging items with lengths up to 48 inches in a single A-22 container, and 96 inches in a double-rigged A-22 container. No studies or tests have been conducted beyond 96 inches in length. Different modes of airdrop should be considered for longer items.

The CDS dimensional limits requirement is established to insure that the rigged item can be airdropped from the aircraft without damage to the item or aircraft. The C-130 aircraft anchor cables are located 73.87 inches above the top of the aircraft rollers, with the interference beginning at butt line 55.0 left and right. For both the C-130 and C-141 aircraft, the CDS gate cutter system extends from the aircraft ceiling such that the bottom of the gate cutter is 83 inches from the top of the rollers for three inches on either side of the centerline of the aircraft. Without these aircraft hardware, the height could be raised to 100 inches, which is generally the height limit for low velocity platform airdrop and LAPES. The potentially higher vertical center of gravity of containers rigged above 83 inches would require evaluation of container stability upon exiting the aircraft.

REQUIREMENT GUIDANCE

The height of the rigged item is affected by the fragility of the item, the mode of airdrop (i.e., high- or low-velocity), and the size of the airdrop item. Refer to 4.3.6 for assistance in determining thickness of energy dissipating material. The dimensions of ramp bundle recovery parachutes mounted on top are:

Source: https://assist.dla.mil -- Downloaded: 2016-12-11T01:38Z
Check the source to verify that this is the current version before use.

Parachute	Dimensions (inches) (Length x width x height)
G-12 (low velocity)	35 x 24 x 12
26-ft ring slot (high velocity)	20 x 17 x 10

Note: A 3/4-inch skidboard and up to 12-inch (low velocity) and 18-inch (high velocity) thick energy dissipating material, depending upon the fragility of the item, are normally included in the maximum height dimension.

REQUIREMENT LESSONS LEARNED

5.3.4.2 Ramp bundles

5.3.4.2.1 Container delivery system dimensional limits verification. Compliance with requirement 4.3.4.2.1 shall be determined by rigging the item in accordance with procedure in FM 10-501/TO 13C7-1-11 and measuring the rigged width, length, and height.

VERIFICATION RATIONALE (5.3.4.2.1)

Preliminary data using computed rigged dimensions are acceptable for planning; however, the rigged item's length and width must be measured to insure that the rigged item is compatible with the CDS, and are within the limits of the container.

VERIFICATION GUIDANCE

Not applicable.

VERIFICATION LESSONS LEARNED

4.3.4.2.2 C-130 bundle delivery system dimensional limits

4.3.4.2.2.1 A-7A and A-21 containers dimensional limits. The rigged item shall not exceed 27 inches in length, 42 inches in width, and 48 inches in height.

REQUIREMENT RATIONALE (4.3.4.2.2.1)

This requirement is established to insure that the rigged item can safely exit the aircraft. There is a 104-inch wide by 50.25-inch height aircraft opening with the aircraft in the bundle delivery system configuration. At a height of 26.5 inches above the top of the bundle delivery system conveyor, the aircraft anchor line cables extend 55 inches from the cargo compartment centerline.

Source: https://assist.dla.mil -- Downloaded: 2016-12-11T01:38Z
Check the source to verify that this is the current version before use.

The container limits for length and width are a result of standard container rigging procedures rather than the aircraft limits. The height limit was established during the bundle delivery system operational test and evaluation (refer to TRADOC TRMS 8-FO-164/MAC Project 11-18-77 Final Report, July 1979 and November 1980.) to insure an acceptable clearance with the aft cargo door.

REQUIREMENT GUIDANCE

See guidance for 4.3.4.1.

REQUIREMENT LESSONS LEARNED

5.3.4.2.2 **C-130 bundle delivery system dimensional limits verification**

5.3.4.2.2.1 **A-7A and A-21 container dimensional limits verification.** Compliance with requirement 4.3.4.2.2.1 shall be determined by rigging the item in accordance with procedures in FM 10-501/TO 13C7-1-11 and measuring the rigged height, width and length.

VERIFICATION RATIONALE (5.3.4.2.2.1)

See rationale for 5.3.4.1.

VERIFICATION GUIDANCE

Not applicable.

VERIFICATION LESSONS LEARNED

4.3.4.2.2.2 **A-22 containers dimensional limits.** The rigged item shall not exceed 96 inches in length, 53.5 inches in width, and 48 inches in height.

REQUIREMENT RATIONALE (4.3.4.2.2.2)

See 4.3.4.2.2.1 rationale, with the exception that the container length and width limits are based upon the standard A-22 container procedures for CDS. Refer to 4.3.4.2.1.

REQUIREMENT GUIDANCE

See guidance for 4.3.4.2.

Source: https://assist.dla.mil -- Downloaded: 2016-12-11T01:38Z
Check the source to verify that this is the current version before use.

REQUIREMENT LESSONS LEARNED

Four A-22 containers (48 x 48 x 48 inches each, including G-12D parachute) were statically loaded on the C-130 rigged for bundle delivery. However, when the ramp was closed, there was insufficient clearance to lock the anchor line cables into the center supports for airdrop. Reference TRADOC TRMS No 8-FO-164/MAC Project 11-18-77 Final Joint US Army/US Air Force Test Report on the C-130 bundle delivery system (WEDGE).

5.3.4.2.2.2 **A-22 container dimensional limits verification.** Compliance with requirement 4.3.4.2.2.2 shall be in accordance with the same verification requirements as in 5.3.4.2.2.1.

VERIFICATION RATIONALE (5.3.4.2.2.2)

Same rationale as 4.3.4.2.2.1 with the exception that the container length and width limits are based upon the standard A-22 containers procedures for CDS. Refer to 4.3.4.2.1.

VERIFICATION GUIDANCE

Not applicable.

VERIFICATION LESSONS LEARNED

4.3.4.3 **Low velocity platform airdrop dimensional limits**

4.3.4.3.1 **Length.** The length of the airdrop-configured item shall be capable of being rigged on a standard low velocity airdrop platform. The overhang beyond the ends of the platform shall not extend below an imaginary plane extending up from the lower edge of the platform at an angle of 30 degrees from the horizontal. The extent of the overhang shall allow the rigged item to exit the aircraft without item or aircraft damage, with an exit velocity of 20 ft/sec from the C-130 aircraft, and 1/4 G acceleration for the C-141 aircraft. Normal overhang is up to 36 inches.

REQUIREMENT RATIONALE (4.3.4.3.1)

The standard size airdrop platforms for low velocity platform airdrop are 8, 12, 16, 20, 24, 28, or 32 feet in length. The requirement for overhang being above a 30 degree plane from the horizontal is to insure that the rigged item exits the aircraft under a jettison condition without damaging the item or the aircraft ramp. The exit conditions were established by the aircraft contractor based upon the airdrop conditions.

Source: https://assist.dla.mil -- Downloaded: 2016-12-11T01:38Z
Check the source to verify that this is the current version before use.

REQUIREMENT GUIDANCE

The minimum reduction in operational configuration should be considered in meeting the airdrop length requirements so that the item is in a relatively operational or combat-ready condition.

REQUIREMENT LESSONS LEARNED

5.3.4.3 Low velocity platform airdrop dimensional limits verification

5.3.4.3.1 Length verification. Compliance with requirement 4.3.4.3.1 shall be determined as follows. The item shall be rigged on a standard size airdrop platform. When there is overhang, the angle between the horizontal plane at the lower edge of the platform and the bottom of the overhang shall be measured. The extent (distance) of overhang shall be measured. When the overhang extends beyond 36 inches, an analysis of the dynamics of the ejection of the rigged item under the conditions in this requirement shall be provided insuring the feasibility that the rigged item can safely exit the aircraft. A confirmation airdrop test shall be satisfactorily conducted by the Government under the required parameters without aircraft or item damage.

VERIFICATION RATIONALE (5.3.4.3.1)

Preliminary data using computed rigged configurations are acceptable for planning; however, the item must be measured prior to any flight testing to insure that the rigged configurations will be acceptable and to verify the computational airdrop dimensions. Airdrop loads have been approved for overhangs up to 36 inches. Extensions beyond 36 inches have not been investigated; therefore an analysis is required to insure flight safety during the extraction phase. In addition, an airdrop test is required to verify the analysis.

VERIFICATION GUIDANCE

Not applicable.

VERIFICATION LESSONS LEARNED

Source: https://assist.dla.mil -- Downloaded: 2016-12-11T01:38Z
Check the source to verify that this is the current version before use.

4.3.4.3.2 Width

4.3.4.3.2.1 C-130 aircraft airdrop width. The width of the airdrop item shall not exceed 108 inches.

REQUIREMENT RATIONALE (4.3.4.3.2.1)

This requirement is established to insure that the rigged load can safely exit the C-130 aircraft within the width of the aft door opening. The minimum width in the C-130 aircraft is 115.8 inches between the aerial delivery extension arms. A clearance of approximately four inches on each side of the rigged item was established, resulting in the 108-inch width limit. This clearance is based upon a potential of 0.5-inch tolerance between the aircraft rail and airdrop platform, potential shifting of the item with respect to the platform, and the difficulty of using the airdrop platform clevises for tiedown with wide loads.

REQUIREMENT GUIDANCE

The item should be designed for a maximum of 108-inch width. Minimum reduction in operational configuration should be considered in meeting the airdrop width requirements so that the item is in a relatively operational or combat-ready condition.

REQUIREMENT LESSONS LEARNED

5.3.4.3.2 Width verification

5.3.4.3.2.1 C-130 aircraft airdrop width verification. Compliance with requirement 4.3.4.3.2.1 shall be determined by measurement of the item width in the airdrop configuration.

VERIFICATION RATIONALE (5.3.4.3.2.1)

Preliminary data using computed rigged dimensions are acceptable for planning; however, the item in the airdrop configuration must be measured prior to flight testing to insure that rigged configuration will be acceptable and to verify the computed width. An analysis of wider than 108-inch items is required to show that the rail/platform tolerance, potential shifting of the item with respect to the platform, and the difficulty of using the airdrop platform devices for tiedowns is not a problem in safely extracting the rigged item from the aircraft. A confirmation airdrop test is required to verify this analysis.

VERIFICATION GUIDANCE

Not applicable.

VERIFICATION LESSONS LEARNED

Source: https://assist.dla.mil -- Downloaded: 2016-12-11T01:38Z
Check the source to verify that this is the current version before use.

4.3.4.3.2.2 C-141 aircraft airdrop width. The width of the airdrop item shall not exceed 115 inches. The maximum projected area in the lateral vertical plane shall not exceed 10,200 square inches.

REQUIREMENT RATIONALE (4.3.4.3.2.2)

This requirement is established to insure that the rigged load can safely exit the C-141 aircraft within the width of the aft door opening. The minimum width in the C-141 aircraft is 123.25 inches between the pressure bulkheads. A clearance of approximately four inches on each side of the rigged item was established, resulting in the 115-inch width limit. This clearance is based upon a potential 0.5-inch tolerance between the aircraft rail and airdrop platform, potential shifting of the loading with respect to the platform, and the difficulty of using the airdrop platform clevises for tiedown with wide loads. The maximum projected area of 10,200 square inches was established to prevent damage to the aircraft petal doors due to the pressure differential created by the extracted item when the airdrop airspeed is 150 KCAS.

REQUIREMENT GUIDANCE

The item width should be designed for a maximum of 108 inches. This will assure compatibility with current airdrop load width and compatibility with the C-130 aircraft maximum width also. Minimum reduction in operational configuration should be considered in meeting the airdrop width requirements so that the item is in a relatively operational or combat-ready condition. The maximum projected area includes the projected area of the airdrop item and ancillary airdrop equipment such as recovery parachutes, airdrop platform, energy dissipating materials, and accompanying load.

REQUIREMENT LESSONS LEARNED

5.3.4.3.2.2 C-141 aircraft airdrop width verification. Compliance with requirement 4.3.4.3.2.2 shall be determined by measurement of the item width in the airdrop configuration, and by calculation of the projected area in the lateral vertical plane of the rigged item. If the width exceeds 108 inches, an analysis shall be provided insuring the feasibility that the rigged item width can safely exit the aircraft and a confirmation airdrop test shall be conducted by the Government under the required parameters without incurring aircraft or item damage.

VERIFICATION RATIONALE (5.3.4.3.2.2)

Preliminary data using rigged width dimensions are acceptable for planning. However, the item in the airdrop configuration must be measured prior to flight testing to ensure that the rigged configuration will be acceptable and to verify the computed width. An analysis of wider than 108-inch items is required to show that the rail/platform tolerance, potential shifting of the item with respect to the platform, and the difficulty of using the airdrop

Source: https://assist.dla.mil -- Downloaded: 2016-12-11T01:38Z
Check the source to verify that this is the current version before use.

platform clevis tiedowns is not a problem in safely extracting the rigged item from the aircraft. A confirmation airdrop test conducted by the Government is required to verify this analysis.

VERIFICATION GUIDANCE

Not applicable.

VERIFICATION LESSONS LEARNED

4.3.4.3.3 **Height**. The longitudinal profile of the rigged item shall not exceed 100 inches for all points aft of the center of gravity. Forward of the center of gravity, the rigged height shall not exceed the height profile jettison limits in appendix B.

REQUIREMENT RATIONALE (4.3.4.3.3)

The requirement for 100 inches maximum height is established to insure that the rigged item can safely exit the aircraft aft door under normal extraction with a 1.4 g vertical gust. The requirement for the height profile jettison limits insures that the item can safely exit under jettison or malfunctioned extraction system conditions. The limit curve is based upon the M-551 Armored Reconnaissance Airborne Assault Vehicle (ARAAV) with a radius of gyration of the rigged item being 6.33 feet, the vertical center of gravity of the rigged item being 55 inches, the rigged item exiting the aircraft at 20 ft/sec for the C-130 aircraft, or 0.25 g acceleration for the C-141 aircraft, and the aircraft experiencing a 1.4 g vertical gust, while maintaining a 5.375-inch (C-130) or 7.5-inch (C-141) vertical clearance with the aircraft. These criteria were developed by the aircraft contractor.

REQUIREMENT GUIDANCE

In considering the height of the airdrop item, the height of the airdrop platform, energy dissipating material, and recovery parachutes must be considered in meeting the overall height limit. Refer to 4.4.6 for assistance in determining the height of the energy dissipating material. The Type II and A/E29H-1 (LAPES) airdrop platforms are 2.5 inches high for 104-inch width, then the height is 4 1/32 inches high at the side rails, not including the tiedown clevises. The Type V platform is 3.5 inches high across the entire width, not including the tiedown clevises. MIL-STD-814, table V, provides dimensions of recovery parachutes.

Minimum reduction in operational configuration should be considered in meeting the airdrop height requirements so that the item is in a relatively operational or combat ready condition.

REQUIREMENT LESSONS LEARNED

Source: https://assist.dla.mil -- Downloaded: 2016-12-11T01:38Z
Check the source to verify that this is the current version before use.

5.3.4.3.3 **Height verification.** Compliance with 4.3.4.3.3 shall be determined by measuring the maximum height of the item in its rigged configuration. The measurements are to be made from the bottom of the platform for longitudinal locations of the rigged item.

VERIFICATION RATIONALE (5.3.4.3.3)

Preliminary data using computed rigged dimensions are acceptable for planning. However, the item in the rigged configuration must be measured prior to any flight testing to insure that the rigged configuration will be acceptable and to verify the computed height.

VERIFICATION GUIDANCE

Not applicable.

VERIFICATION LESSONS LEARNED

4.3.4.4 **LAPES dimensional limits.** The LAPES dimensional limits are same as the C-130 aircraft low velocity airdrop dimensional limits in 4.3.4.3.

REQUIREMENT RATIONALE (4.3.4.4)

Same rationale as in 4.3.4.3.1.

REQUIREMENT GUIDANCE

Standard LAPES platforms are 8, 12, 16, 20, 24, and 28-foot long A/E 29H-1 or Type V airdrop platforms. The Type V airdrop platform is one inch thicker than the A/E 29H-1 airdrop platform. There are no recovery parachutes to be considered for LAPES.

REQUIREMENT LESSONS LEARNED

An item rigged for LAPES on an A/E29H-1 airdrop platform cannot be loaded into a C-141 aircraft because the height of the platform skids is greater than the aircraft roller height.

5.3.4.4 **LAPES dimensional limits verification.** Compliance with requirement 4.3.4.4 shall be in accordance with the verification of 5.3.4.3 for the C-130 aircraft.

VERIFICATION RATIONALE (5.3.4.4)

Same rationale as in 5.3.4.3.

Source: https://assist.dla.mil -- Downloaded: 2016-12-11T01:38Z
Check the source to verify that this is the current version before use.

VERIFICATION GUIDANCE

Not applicable.

VERIFICATION LESSONS LEARNED

4.3.5 **Planform loading.** The planform loading of the rigged item shall not be less than the following limits:

Mode	Minimum Planform Loading (lb/ft_2)
Door Bundle	28
Ramp Bundle	28
Low Velocity Platform Airdrop	35
LAPES	35

REQUIREMENT RATIONALE (4.3.5)

The planform loading requirement is established to insure that, upon exiting the aircraft, the aerodynamic force on the rigged item does not create a lift force component capable of lifting the load with respect to the aircraft with the potential for impacting the aircraft. Platform rigged items that are extracted present a more favorable angle of attack to the air flow behind the aircraft to create a lift force and, therefore, a more stringent limit has been established. These criteria apply for airdrop airspeeds between 130 KIAS and 150 KIAS which are the standard airdrop speeds.

REQUIREMENT GUIDANCE

The planform area is based upon the largest projected area of the rigged item. For A-22 containers, the area formed by the height and the longest base dimension is usually the area used to calculate the minimum planform area. For low velocity platform airdrop and LAPES, the area formed by the length and the width is usually the area used to calculate the minimum planform area. Any area formed by overhang must also be considered.

REQUIREMENT LESSONS LEARNED

In 1981, the minimum planform loadingfor door bundles and ramp bundles was lowered from 35 lb/ft^2 to 28 lb/ft^2 (Reference ASD-ENEC-TM-81-2, Minimum Planform Loading Test, Final Test Report, March 1981.)

An M274, 1/4-ton truck rigged on an airdrop platform impacted the empennage of a USAF C-130 aircraft during the extraction phase. The planform loading was approximately 22 lb/ft^2. Airspeed was approximately 130 KIAS.

An airdrop of an unknown item on an airdrop platform impacted the empennage of a USCG C-130 aircraft during the extraction phase. The planform loading was approximately 11.4 lb/ft^2. Airspeed was approximately 130 KIAS.

Source: https://assist.dla.mil - Downloaded: 2016-12-11T01:38Z
Check the source to verify that this is the current version before use.

5.3.5 **Planform loading verification.** Compliance with requirement 4.3.5 shall be determined by measuring or computing the largest projected area of the rigged item, by measuring the rigged weight, and by computing the planform loading.

VERIFICATION RATIONALE (5.3.5)

Preliminary data using computed rigged weight are acceptable for planning. However, the item rigged weight is to be measured.

VERIFICATION GUIDANCE

Not applicable.

VERIFICATION LESSONS LEARNED

4.3.6 **Impact survivability.** The airdrop item shall be capable of withstanding the deceleration forces imposed by ground impact of the rigged item and thereafter comply with the performance requirements of the applicable end item specification. Deceleration forces are documented in MIL-STD-669, paragraph 5.4, for low velocity airdrop.

REQUIREMENT RATIONALE (4.3.6)

This requirement is established to insure that the item can withstand the deceleration forces during ground impact without damage to the item. This requirement is based upon low velocity airdrop, upon the desired maximum dissipater stack height of 12 inches, and upon the results of an investigation of standard military vehicles. No formal criteria have been established for deceleration forces that the item could be subjected to for high velocity airdrop and for LAPES; however, the low velocity airdrop criteria are applied for LAPES.

REQUIREMENT GUIDANCE

The requirement for minimum number of stacks is for ease of rigging. The location and size of the energy dissipating material affect the loading from the weight of the airdrop item that is transmitted to the aircraft rollers. In addition, the height of the stacks affects the height profile of the rigged item. USA Natick Research and Development Center, Natick MA 01760 (STRNC-UAS), is the office of engineering responsibility for impact survivability and can provide further guidance if required.

REQUIREMENT LESSONS LEARNED

There are a few vehicles rigged for low velocity platform airdrop that could be airdropped from the C-130 aircraft and survive ground impact. However, they were not approved for the C-141 aircraft because of aircraft roller loads being exceeded. Rearranging the energy dissipating material resulted in airdrop qualification from both aircraft.

Source: https://assist.dla.mil -- Downloaded: 2016-12-11T01:38Z
Check the source to verify that this is the current version before use.

5.3.6 **Impact survivability verification.** A simulated airdrop impact test detailed herein will establish the capability of the item to withstand the deceleration force and the above performance requirements for low velocity airdrop and LAPES. Compliance with requirement 4.3.6 shall not affect the compliance with requirements in 4.2.4.3 and 4.3.4. The requirement of surviving a 28.5 foot per second ground impact velocity specified in this requirement will be attained when the rigged item is free-dropped from a height of 12.7 feet. This height shall be measured from the lowest point on the bottom of the skid or airdrop platform upon which this item is rigged and the impact surface. The test shall be conducted using a concrete impact surface. The platform or skid must be approximately parallel to the impact surface prior to drop, and impact the ground at an angle from the horizontal of not greater than 2.5 degrees in any direction for the results to be valid. The item, after impact, shall meet the performance requirements of the applicable end item specification.

VERIFICATION RATIONALE (5.3.6)

The simulated airdrop impact test provides the best method of determining impact survivability for the complex dynamic loadings which occur between the item and the energy dissipactor material. In addition, this type of test is normally conducted by the Government prior to any airdrop test. Since the type of testing is not costly, build-up tests at lower deceleration loadings can be conducted for a conservative approach to verification.

VERIFICATION GUIDANCE

For low velocity airdrop and LAPES, this verification requirement is adequate. There is no standard verification requirement for high velocity airdrop. USA Natick Research and Development Center, Natick MA 01760 (STRNC-UAS), should be contacted for verification requirements for this specific mode of airdrop.

VERIFICATION LESSONS LEARNED

The use of low velocity platform impact survivability verification has proven acceptable for items rigged for LAPES.

4.3.7 **Airdrop of ammunition/explosives.** To preclude any possibility of damage to the aircraft or injury to the aircrew, the fragmentation or blast area for ammunition/explosive items shall be sufficiently less than the distance between any possible detonation point and the aircraft.

REQUIREMENT RATIONALE (4.3.7)

This requirement was established to insure that, if there is a malfunction of the airdrop hardware during the airdrop, the resulting detonation or function of the ammunition will not endanger the aircrew or damage the aircraft. This requirement particularly applies to airdrop modes such as LAPES (5-15 feet AGL), CDS (600 feet AGL), low velocity platform airdrop (1100-1500 feet AGL), and door bundles (750 feet AGL).

Source: https://assist.dla.mil -- Downloaded: 2016-12-11T01:38Z
Check the source to verify that this is the current version before use.

REQUIREMENT GUIDANCE

The requirement applies only when the rigged item contains explosives or ammunition which will detonate or have solid or liquid propellant motor which could function. The requirement applies to all modes of airdrop. Additional requirements (see 4.3.7.1) are required for LAPES. FM 533/TO 13C7-18-41 contains lists of ammunition or explosives already approved using high- and low-velocity container (A-7A or A-22/A-23) airdrop. FM 10-512/TO 13C7-1-8 contains lists of ammunition or explosives already approved for low velocity platform airdrop.

REQUIREMENT LESSONS LEARNED

5.3.7 Airdrop of ammunition/explosives verification. Compliance with requirement 4.3.7 shall be determined by providing an analysis of the fragmentation/blast area insuring there is no possible hazard to the aircrews and aircraft. The analysis should consider the following:

Type of aircraft

Standard airdrop altitude

Standard airdrop airspeed

Complete malfunction of the parachute subsystem

Ground impact velocity of at least 150 feet per second

Detonation or function upon impact

Separation distance required between detonation point and aircraft to preclude any possibility of damage/injury from fragmentation or blast.

REQUIREMENT RATIONALE (5.3.7)

A joint agreement by the Military Airlift Command (MAC) safety office and the Aeronautical Systems Division in 1976 established this method of verification, in approving items with ammunition or explosives for all modes of airdrop from MAC cargo aircraft.

REQUIREMENT GUIDANCE

Not applicable.

REQUIREMENT LESSONS LEARNED

Verification by analysis has proven acceptable for all items containing ammunition or explosives that have been approved for airdrop.

Source: https://assist.dla.mil -- Downloaded: 2016-12-11T01:38Z
Check the source to verify that this is the current version before use.

4.3.7.1 LAPES of ammunition/explosives. Items shall be capable of withstanding the malfunctioning drop simulation test in MIL-STD-331, Test 117, for the following conditions:

Item oriented nose up
Item oriented nose down
Item oriented horizontally

The explosives and ammunition shall not detonate, deflagrate, or function during or immediately after test.

REQUIREMENT RATIONALE (4.3.7.1)

The proximity of the aircraft to the impact point necessitates more stringent requirements for airdrop of ammunition/explosives than other modes of airdrop. Impact forces per MIL-STD-331, Test 117, will not be transmitted to the load during normal LAPES; however, a malfunction of the airdrop extraction system could result in this magnitude of impact force.

REQUIREMENT GUIDANCE

This requirement applies only when the rigged item contains explosives or ammunition which will detonate or have solid or liquid propellant motors which could function. FM 10-512/TO 13C7-1-8 contains lists of ammunition or explosives already approved for LAPES.

REQUIREMENT LESSONS LEARNED

The M1 flame thrower ignition cylinder detonated upon ground impact during a malfunction test causing an intensely hot fire. XM185 and XM186 signals ignited upon ground impact during malfunction tests. An AT-HE M19 mine ignited in a low order flash burn upon ground impact during malfunction tests. An AP-M26 mine detonated upon ground impact during a malfunction test. The result of these malfunction tests which were conducted to determine compliance with MIL-STD-331, Test 117, resulted in these five items being disapproved for LAPES.

5.3.7.1 LAPES of ammunition/explosives verification. Compliance with requirement 4.3.7.1 shall be determined by conducting the malfunction drop simulation tests in MIL-STD-331, Test 117 for the following conditions.

Item oriented nose up

Item oriented nose down

Item oriented horizontally

The explosives and ammunition shall not detonate, deflagrate or function as a result of the airdrop test.

VERIFICATION RATIONALE (5.3.7.1)

Testing is required for LAPES when item contains ammunition or explosives because of proximity of the load upon ground impact to the position of the

Source: https://assist.dla.mil -- Downloaded: 2016-12-11T01:38Z
Check the source to verify that this is the current version before use.

aircraft. This testing criteria was established by AFISC/SEV, AFSC/IGF and MAC/IGFX during a LAPES Safety Meeting at Yuma Proving Ground on 18 and 19 November 1975. Satisfactory completion of this testing is required by Military Airlift Command prior to conduct of LAPES from MAC C-130 aircraft for items containing ammunition or explosives.

VERIFICATION GUIDANCE

Flight testing to verify this requirement is normally conducted by the Government.

To attain the impact velocity, the items capable of being rigged in an A-7A or A-22 container are so rigged with enough energy dissipator material for a low velocity airdrop. The rigged item is airdropped in a free-fall mode from at least 600 feet above ground level.

VERIFICATION LESSONS LEARNED

After satisfactorily completing the malfunction drop simulation tests, a load of XM825, 155 mm projectiles were airdropped by LAPES. During the extraction phase the attitude control bar, which was not properly secured, dropped to the bottom of the platform. This configuration resulted in a negative pitch of the platform. The rigged item impacted the ground at a 32 degree negative angle. The projectiles did not function or leak. The malfunction tests previously conducted assured the non-detonation or non-function for this type of LAPES extraction malfunction.

40. DATA REQUIREMENTS

When this standard is used in an acquisition requiring the delivery of data in accordance with the contract requirements, the following Data Item Descriptions should be considered.

Paragraph No.	Data Requirement Title	Applicable DID No.	Options
	Report Transportability Problem Item	DI-L-2123	
	Transportability Report	DI-L-3327A	
	Transportability Evaluation Plan/Report	DI-L-6148	

Source: https://assist.dla.mil -- Downloaded: 2016-12-11T01:38Z
Check the source to verify that this is the current version before use.

TABLE I. Typical loads vs requirements.

	AIRDROP LOADS	WHEELED VEHICLES	TRACKED VEHICLES	PALLETIZED GEN CARGO	CONTAINERS & SHELTERS	VANS	SKIDDED CARGO	GEN FLOOR LOADED CARGO	TANKER VEHICLES	APPLICABLE PARAGRAPH(S)
ACCOMPANYING LOADS	X	X	X							4.3.3.3 4.4.1*
AIRDROP OF AMMUNITION/ EXPLOSIVES	X									4.4.7*
AXLE LOADS		X			X	X			X	4.3.4.4.4
AXLE/BOGIE ARTICULATION		X							X	4.3.1.4 4.3.4.5
COMPARTMENT LOAD LIMITS	X	X	X	X	X	X	X	X	X	4.3.4.2
CONCENTRATED LOADS	X		X	X	X	X	X	X	X	4.3.4.4.1
CONTAINERS/SHELTERS AND VANS					X	X				4.3.1.7
CONVEYOR SPACING				X			X			4.3.1.8
DIMENSIONAL CRITERIA	X	X	X	X	X	X	X	X	X	4.3.1 4.3.1.1 4.4.4*
EMERGENCY ACCESS	X	X	X	X	X	X	X	X	X	4.3.1.5
EMERGENCY AFT RESTRAINT PROVISIONS	X									4.4.2.3.4*
EXTRACTION PROVISIONS	X									4.4.2*
HAZARDOUS MATERIALS	X	X	X	X	X	X	X	X	X	4.3.6.1 4.4.1*
IMPACT SURVIVABILITY	X									4.4.6*

* These requirements are for airdrop only.

Source: https://assist.dla.mil -- Downloaded: 2016-12-11T01:38Z
Check the source to verify that this is the current version before use.

TABLE I. Typical loads vs requirements. - continued

	AIRDROP LOADS	WHEELED VEHICLES	TRACKED VEHICLES	PALLETIZED GEN CARGO	CONTAINERS & SHELTERS	VANS	SKIDDED CARGO	GEN FLOOR LOADED CARGO	TANKER VEHICLES	APPLICABLE PARAGRAPH(S)
INTERNAL CARGO RESTRAINT	X				X	X		X		4.3.3.2 4.4.1*
ITEM GROSS WEIGHT/ CENTER OF GRAVITY	X	X	X	X	X	X	X	X	X	4.3.4.1 4.4.1*
LINEAR LOADING		X	X		X	X	X	X	X	4.3.4.4.2
MARKING	X	X	X	X	X	X	X	X	X	4.3.7
MHE REQUIREMENTS		X	X	X	X		X		X	4.3.1.9 4.3.2.1
OVERHANG		X	X			X			X	4.3.1.3
PLATFORM OVERHANG	X									4.4.4.3.1* 4.4.4.4.*
PROJECTION		X	X			X	X		X	4.3.1.2
RAMP CRESTING		X			X	X	X		X	4.3.1.4
RAMP HINGE LIMITS		X	X			X	X		X	4.3.4.5
RAPID DECOMPRESSION						X	X		X	4.3.5.2 4.4.1*
RESTRAINT PROVISIONS	X	X	X	X	X	X	X	X	X	4.3.3 4.3.3.1 4.3.3.2 4.4.2.1*
ROLLER LIMITS	X			X			X			4.3.1.6 4.3.4.3 4.4.1*

* These requirements are for airdrop only.

Source: https://assist.dla.mil -- Downloaded: 2016-12-11T01:38Z
Check the source to verify that this is the current version before use.

TABLE I. Typical loads vs requirements. - continued

	AIRDROP LOADS	WHEELED VEHICLES	TRACKED VEHICLES	PALLETIZED GEN CARGO	CONTAINERS & SHELTERS	VANS	SKIDDED CARGO	GEN FLOOR LOADED CARGO	TANKER VEHICLES	APPLICABLE PARAGRAPH(S)
SHOCK/VIBRATION	X	X	X	X	X	X	X	X	X	4.3.5.1 4.4.1*
SHORING REQUIREMENTS		X	X	X	X		X		X	4.3.2.2 4.3.4.4.7
SLING/RECOVERY SYSTEM SUSPENSION PROVISIONS	X									4.4.2.3*
SPECIAL HANDLING - VENTING, ON-BOARD POWER, REFRIGERATION										4.3.6 4.3.6.2
TONGUE LOADS		X				X			X	4.3.4.4.3
TREADWAY/OFF-TREADWAY LOADING		X	X		X	X		X	X	4.3.4.4.6
VEHICLE SUSPENSION		X				X			X	4.3.4.6
WEIGHT LIMITS	X									4.4.3*
WHEEL/TIRE LOADS		X			X	X			X	4.3.4.4.5
WINCHING PROVISIONS		X	X			X	X		X	4.3.2.1

* These requirements are for airdrop only.

Source: https://assist.dla.mil -- Downloaded: 2016-12-11T01:38Z
Check the source to verify that this is the current version before use.

APPENDIX B

AIR TRANSPORTABILITY DESIGN INFORMATION

10. SCOPE

10.1 Scope. This appendix provides general information on military aircraft features and limitations, restraint criteria and applications, and unit load device design necessary to apply sections 4 and 5 of the basic standard (MIL-STD-1791) for a specific application.

10.2 Purpose. This appendix provides information to assist the product designer and Government procuring activity in the use of MIL-STD-1791.

10.3 Use. This appendix is designed to provide design limits for items which are intended to be air transported in the USAF prime mission cargo aircraft and the CRAF.

10.4 Format. This appendix has five sections. The first section discusses general aircraft limits in terms of dimensional, weight, and environmental considerations. In addition, the first section discusses cargo restraint theory and application techniques and provides pallet, platform and ISO container design information. The principles and concepts are general in nature and apply to all military cargo aircraft. Descriptive text is freely supplemented with drawings, sketches, and examples to clarify important concepts. The remaining four sections present specific design criteria for the C-130, C-141, and C-5 military cargo aircraft and the long range international segment of the CRAF.

10.5 Responsible engineering office. The responsible engineering office (REO) for this appendix is ASD/ENECA, Wright-Patterson AFB OH 45433-6503. The individuals who have been assigned the responsibility for this appendix are Mr. Thomas Gardner, (Air Transport) and Mr. Patrick O'Brien (Airdrop), ASD/ENECA, Wright-Patterson AFB OH 45433-6503, Autovon 785-6039, commercial (513) 255-6039.

20. REFERENCED DOCUMENTS

20.1 References. The documents referenced in this appendix are not intended to be applied contractually. Their primary purpose is to provide background information for the Government engineers responsible for developing the most appropriate performance values (filling in the blanks) for the requirements contained in the specification proper.

20.2 Avoidance of tiering. Should it be determined that the references contained in this appendix are necessary in writing an RFP or building a contract, excessive tiering shall be avoided by calling out only those portions of the reference which have direct applicability. It is a goal of the Department of Defense that the practice of referencing documents in their entirety be eliminated in order to reduce the tiering effect.

Source: https://assist.dla.mil -- Downloaded: 2016-12-11T01:38Z
Check the source to verify that this is the current version before use.

20.3 Government documents

SPECIFICATIONS

Military

MIL-A-008865	Airplane Strength and Rigidity Miscellaneous Loads

TECHNICAL ORDERS

T.O. 1-1B-40	Weight and Balance Data
T.O. 1C-130-1	Flight Manual, USAF Series C-130B, C-130E, and C-130H Aircraft USCG Series HC-130B Aircraft
T.O. 1C-141-1	Flight Manual, USAF Series Aircraft AF33(657)-8835, F09603-78-C-1473, C-141A and C-141B

20.4 Other publications

American National Standards Institute

ANSI MH5.1.1	Closed Van Cargo Containers, Requirement for

(Application for copies should be addressed to the American National Standards Institute, 1430 Broadway, New York, NY 10018.)

Society of Automotive Engineers, Inc.

SAE AS 832	Air & Air/Surface (Intermodal) General Purpose Containers

(Application for copies should be addressed to the Society of Automotive Engineers, Inc., 400 Commonwealth Drive, Warrendale, PA 15096.)

30.1 General aircraft criteria

30.1.1 Dimensional limits

30.1.1.1 Internal size. The internal dimensions provide a base to develop actual working dimensions. The allowable working dimensions include room to maneuver the cargo into the aircraft and movement of cargo during flight. To compensate for this, a general requirement exists that no cargo shall be within 0.15 m (6 in.) of walls or ceiling of the aircraft during loading/unloading or in flight. There are other structural items that can limit the aircraft internal size, but this 0.15 m (6 in.) is taken from a basic aircraft dimension. For example, normally an aircraft is round and is wider at midlevel than at the floor, yet the 0.15 m (6 in.) limit is calculated from the basic rectangular box size of the compartment (figure 2). On many aircraft the entry door becomes the limiting factor. Again, the load must not be within 0.15 m (6 in.) of door sides/top.

Source: https://assist.dla.mil -- Downloaded: 2016-12-11T01:38Z
Check the source to verify that this is the current version before use.

30.1.1.2 **Safety aisle.** On military aircraft, a requirement exists for an aisle in the cargo compartment for crew transit from the flight station to the rear of the aircraft for firefighting, checking and resecuring loads, and scanning engines or landing gear. Certain aircraft, such as the C-141 and C-5, have walkways. These walkways satisfy this requirement. However, they must be kept clear of cargo and/or protrusions at all times. On aircraft such as the C-130, a minimum clear space on the left hand side when facing forward of 0.36 m wide by 1.83 m high, or 0.76 m wide by 1.22 m high (14 in. wide by 72 in. high, or 30 in. wide by 48 in. high), must exist at all times. It is possible to vary slightly from this criteria. For example, 0.41 m x 1.68 m (16 x 66 in.) would be acceptable. However, the 0.36 m (14 in.) width must be maintained. In designing to meet this criteria, remember the basic requirement that a man wearing a parachute must be able to get from the forward end of the aircraft to the rear troop doors.

30.1.1.3 **Ramps.** Many Air Force aircraft are equipped with loading ramps, allowing wheeled vehicles to be driven or pulled onto the aircraft directly from the ground. Any item loaded in this manner must be designed so that its height and length do not cause the item to contact the upper structural members of the aircraft or the undercarriage contact the ramp crest area as shown in figure 3. Furthermore, the item should not contact the ground. Four critical points exist on this design limit, as indicated by the shaded areas. A basic criteria would be a capability to negotiate a ramp angle of 0.26 rad (15°), 6.56 m (20 ft) long. This would allow entry into all current Air Force aircraft. A standard nomenclature of dimensional terms for loading clearances for wheeled vehicles is illustrated in figure 4.

30.1.2 **Weight limits**

30.1.2.1 **General.** In general, the allowable cargo capacity is dependent on the aircraft floor strength, which varies from one location to another and is dependent on aircraft structural design. These floor strength variations are treated in detail within each individual aircraft section within this appendix.

30.1.2.2 **Floor loading.** Floor loading is the loading of cargo, such as a box, directly on the floor of an aircraft. Wheeled vehicles do not qualify as this type of cargo. The floor loading limit for cargo is indicated in either psi or psf and may vary from one part of the cargo compartment to another.

30.1.2.3 **Treadways.** This is a high strength area especially designed to support vehicle traffic. Make all efforts to keep the tires of the vehicles on the treadway. If a tire is only partially on the treadway, you must consider the full weight as being off the treadway. Maximum allowable treadway limits are provided in axle and individual wheel loads. Where only an axle limit is provided, the wheel limit is one-half. If a vehicle has two single-wheel axles on the same lateral line, they are considered a single axle.

30.1.2.4 **Nontreadway area.** The specific aircraft section within this appendix also provides the axle loads for nontreadway areas. In some cases, where the floor area between and outboard of the treadway are the same, only one allowable load factor may be provided.

Source: https://assist.dla.mil -- Downloaded: 2016-12-11T01:38Z
Check the source to verify that this is the current version before use.

30.1.2.5 **Roller loads.** Many aircraft are equipped with roller conveyor systems capable of handling palletized loads and locking them directly into the aircraft system. In addition to floor loading limits, roller load allowable must not be exceeded. Three factors are: load per linear foot, load per individual roller, and load per lateral row. A pallet or skids integral to your design may be provided to traverse the rollers. Remember to position the skids to match the various roller systems between aircraft and materials handling equipment. For example, an item meeting requirements to move on the C-130 roller system should also match the C-141 and C-5A as well as various K loaders used to load these aircraft. When building a flat bottom unit, the bottom should be as continuous as possible. The design should incorporate longitudinal supports parallel to the aircraft roller system. Do not use lateral supports, because the aircraft roller may penetrate the unsupported area after passing a lateral support. See figure 5 for aircraft and loader roller locations.

30.1.2.6 **Ramps.** Ramp allowable load limits for loading/unloading vary with all cargo aircraft, and ramp loading positions for each aircraft vary also. The overall strength of the auxiliary ramp equipment (hinge, pressure streets, etc.) affects total ramp load capability. For example, the C-141 aircraft ramp hinge has a maximum single axle crest limit of 14,741 kg (32,500 lb) in the ground loading configuration. The limit does not apply to horizontal loading. For specific limiting criteria, refer to the specific aircraft section within this appendix.

30.1.2.7 **Compartment strength.** All cargo aircraft are compartmentalized from front to rear due to the structural design of the aircraft. Usually these compartments have letter designations and run from one fuselage station to another, including the ramp. Each fuselage station is given in inches. Compartment size can be computed from these fuselage station designations. During loading/unloading operations, all compartments have equal strength equivalent to the strongest compartment's strength during flight conditions. The strongest compartment is the area under the wings; however, total length of this compartment varies between aircraft depending on performance and mission. Thus, two allowable load charts are provided for each aircraft, one for loading and another for flight.

30.1.2.8 **Floor load.** Figure 6 illustrates how to determine the floor load (psi) that a vehicle equipped with pneumatic tires will exert on the cargo compartment treadways.

30.1.2.9 **Rigid Wheels.** Steel wheels, in theory, provide only line contact with the supporting area. Slight flexibility of both floor and wheel makes the contact a ribbon rather than a line, but the weight on a steel wheel is still concentrated. Solid rubber tires or tracks also concentrate the load on a very small area. Vehicles with cleats or lugs must have planking thick enough for them to sink into, and the load must be spread enough that the limiting weight per square surface area on the vehicle treadways will not be exceeded. Avoid steel wheels and gripping devices when designing items for air transport.

Source: https://assist.dla.mil -- Downloaded: 2016-12-11T01:38Z
Check the source to verify that this is the current version before use.

30.1.2.10 Center of gravity. The aircraft center of gravity (CG) is the point around which the aircraft will balance. The flight performance of the aircraft depends on the location of this point. If the CG is outside of technical order limits, the aircraft cannot be flown. As fuel, oil, cargo, and other weights are added, removed, or relocated within the aircraft, the aircraft CG changes. The aircraft is designed to permit such CG changes, provided the CG location remains within certain specified limits. Longitudinal CG of an item to be moved by air must be identified on each item of equipment to be transported. The lateral CG of the equipment is sometimes called center of balance. The lateral CG should be marked with a 25 by 76 mm (1 by 3 in.) (contrasting color) stripe on both sides of the loaded equipment as described in paragraph 5.4.25 of MIL-STD-129. Small cargo that can be placed on a 463L pallet generally need not meet this requirement. Under certain conditions the vertical CG of the item is also required. Instructions for calculating these CG of cargo are contained in this paragraph and 30.1.2.10.1. These instructions are limited to longitudinal and vertical CG. Lateral CG is computed using the same method as for longitudinal CG. When more than one unit comprises a load, it may be necessary to compute the entire aircraft load CG to determine if that unit load can be moved on a single aircraft. For calculation of longitudinal CG cargo weights see figures 7 through 10.

30.1.2.10.1 Vertical CG. To determine the vertical CG:

a. Compute the longitudinal CG (X) as shown in 30.1.2.10. Place rear axle or end of crate on scale. Raise front end of vehicle as shown in figure 11. Read weight (W_3) of rear axle or end of crate. Determine the angle of the vehicle frame or bottom surface of crate relative to the ground. The vertical CG ($\overline{y}$) is:

$$\overline{y} = \frac{(W_3L - WX)}{(W \tan 0)} + C$$

30.1.3 Shoring

30.1.3.1 General. Shoring is used to spread a load over a larger floor area and thus permit carrying a load with a higher weight concentration than normally would be allowed. Shoring can make the difference between carrying and not carrying a given load. The effectiveness of load-distributing shoring, however, should not be exaggerated.

30.1.3.1.1 Shoring effect. In many cases it is physically impossible for concentrated loads to meet load distribution requirements. Shoring can be used to help distribute the load; however, all efforts should be made to avoid this. In general, equipment designed for routine airlift should not require shoring. For example, a vehicle may require slightly larger tires to meet loading requirements. While an initial cost is incurred in using these larger tires, the cost of shoring for every movement could exceed that of the larger ties. Further, the item may not be air transported due to lack of proper shoring materials that must be supplied by the shipper. Shoring requirements

Source: https://assist.dla.mil -- Downloaded: 2016-12-11T01:38Z
Check the source to verify that this is the current version before use.

result in longer loading and unloading times. The exact opposite applies if an item is to be moved a very limited number of times, such as an item of heavy machinery or on an emergency basis only. The use of shoring in this case for movement can be cost effective. The use of shoring can be broken down into two categories: (1) shoring used in loading the aircraft and (2) shoring used during flight. Both of these follow the same general rules.

30.1.3.1.2 **Weight distribution.** The weight of a load resting on shoring is not spread equally over the entire area of contact between the shoring and the surface on which the shoring is resting. The area over which the weight is spread will be less than the area of shoring and surface contact. In general, shoring will increase the area over which a load is distributed to whatever area is encompassed by extending a plane drawn downward and outward from the peripheral line of contact of the load on the shoring, at an angle of 0.785 rad (45°), until it intersects the surface on which the shoring rests.

30.1.3.1.3 **Geometric weight distribution.** The effect of this geometric estimation is illustrated in figure 12. Assume that the plank is 51.0 mm (2 in.) thick, and the box is 304 by 152 mm (12 by 6 in.). The area of contact between the box and plank will be 304 x 152 mm (12 by 6 in.), or 0.05 m^2 (72 $in.^2$). Now, extend imaginary planes downward and outward from the edges of the bottom of the box at angles of 0.785 rad (45°). Where these imaginary planes intersect the cargo floor, the area of contact will be 254 by 406 mm (10 by 16 in.), or 0.103 m^2 (160 $in.^2$). In this example, the area of contact has been more than doubled, but the increase will not always be so proportionately great. What has happened is that the area over which the load has been distributed has been enlarged by the addition of a border 51 mm (2 in.) wide around the area of contact between the box and shoring. This border is as wide as the shoring is thick.

30.1.3.1.4 **Shoring distribution area.** The direct proportion between the width of the border and the thickness of the shoring is generally applicable to all shoring. Since the addition of area occurs only around the edge of the area of contact, the larger the object shored, the smaller the proportion of increase of contact area. Shoring 51 mm (2 in.) thick under a box 305 mm (12 in.) square will increase the area of contact by 77 percent by adding 0.072 m^2 (112 $in.^2$ to the original 0.09 m^2 (144 $in.^2$). Shoring 51 mm (2 in.) thick under a box 1.52 by 1.52 m (60 by 60 in.) will increase the area of contact by only about 14 percent by adding only 0.32 m^2 (496 $in.^2$) to the original 2.32 m^2 (3600 $in.^2$).

30.1.3.1.5 **Footprint area increase.** The spreading effect of simple shoring is the same regardless of the shape of the area of contact. Figure 12 also shows the "footprint" of a wheel with a pneumatic tire resting on the plank. The shoring enlarges the area of weight distribution of the footprint by the same directly proportionate shoring-thickness to area-increase rule, thereby adding a 51 mm (2 in.) border. Assuming the original footprint to be 0.016 m^2 (25 $in.^2$), a 51 mm (2 in.) border addition would spread the load over an area of 0.05 m^2 (81 $in.^2$). Although shoring allows psi limits to be exceeded, axle load allowables are not affected.

Source: https://assist.dla.mil -- Downloaded: 2016-12-11T01:38Z
Check the source to verify that this is the current version before use.

30.1.3.1.6 Floor load. Figure 6 illustrates how to determine the floor load (psi) that a vehicle equipped with pneumatic tires will exert on the cargo compartment treadways.

30.1.3.1.7 Tires. One additional consideration must be addressed when viewing vehicles. Tires have tread which effectively reduces contact area. In case of construction and rough terrain vehicles, this reduction can be significant. The shoring thickness must be a least one-half of the tire groove width. For example, if the tire has a 51 mm (2 in.) groove between the tire treads, any shoring used must have a depth of 25.4 mm (1 in.) to insure full floor contact.

30.1.3.1.8 Rolling shoring. Rolling shoring is used on ramps and floor areas over which a vehicle must roll when being loaded on the aircraft. The majority of vehicles transported, such as those with pneumatic tires, do not exceed unit floor and ramp load maximums. However, if they do, this method can be used to allow loading provided the shored vehicle meets load requirements. This shoring is also used to protect the aircraft floor against certain types of gripping devices. All track vehicles with metal cleats, studs, or other gripping devices that damage the floor require 19.1 mm (3/4 in.) shoring. Track vehicles with serviceable rubber pads do not require shoring provided the aircraft floor limitations are not exceeded. (Pad areas/pressure points are only those pads directly under a weight supporting axle or wheel and pad areas or cleats between these points will not be considered load bearing points when computing contact pressure (psi) loading.) If contact pressures dictate, additional shoring will be required. When determining the contact area for the tracked vehicle, use only that area of the tracks or lugs which lies under the supporting wheels of the vehicle and is actually helping to support the load. Where rubber pads are used, the rubber pad area must protrude beyond the steel track, so that no portion of the metal track contacts the cargo floor.

30.1.3.1.9 Parking shoring. Parking shoring is shoring required under the wheels or tracks of vehicular cargo to distribute load and/or to protect the aircraft cargo compartment floor from damage during flight. A vehicle that requires rolling shoring will also require parking shoring. (See figure 13.) Parking shoring is also used under vehicle components, such as towing tongues, bulldozer blades, and loader buckets when these parts are lowered to the aircraft floor for flight.

30.1.3.1.10 Bridge-type shoring. Because of the diminishing effects of simple shoring on large objects and the resulting difficulty which may be experienced in bringing a load with required limits, bridge-type shoring may be employed to take advantage of the greater strength of the vehicle treadways. As illustrated in figure 14, bridge-type shoring allows heavy cargo to be placed between the treadways on heavy supporting beams which span the floor between the treadways. For between-treadway loadings, bridge-type shoring on treadways is permissible when used in such a manner as not to overload treadway limitations. If bridge-type shoring is used beneath wheeled vehicles, use the bulk cargo floor limits instead of the wheeled vehicle limits to determine allowable floor pressure in psi.

Source: https://assist.dla.mil -- Downloaded: 2016-12-11T01:38Z
Check the source to verify that this is the current version before use.

30.1.3.1.11 **Approach shoring.** Approach shoring is used to reduce the ramp angle that a vehicle must traverse during aircraft on/off-loading. Reduction of the ramp angle becomes necessary to avoid interference problems where there are minimal clearances underside (cresting), overhead (projection), and overhang (ground or ramp contact). The shoring is placed in front of the ramp to form a longer "approach ramp" with additional shoring placed under ramp as shown in figure 15 or "stepped-up" on top of the ramp. The ramp must be properly supported during such operations. Approach shoring requires large amounts of lumber and is not an acceptable alternative to designing to have adequate clearances. Approach shoring is sometimes referred to as "step-up" shoring as in figure 15.

30.1.3.1.12 **Sleeper shoring.** Sleeper shoring is used to prevent movement of a vehicle due to gust load conditions, where the tires or suspension system cannot withstand G loads without failure or depression-producing slack in tiedown devices. This can cause a whipping action on the tiedown device with potential failure. A tire failure could result in the wheel rim contacting the aircraft floor and causing damage to the aircraft. This type of shoring is placed between the aircraft floor and a structural part of the vehicle such as the frame or axles. It can also be used between various parts of equipment that are spring mounted to prevent their movement during flight.

30.1.4 **Environment**

30.1.4.1 **General.** The shipment of cargo and equipment by air presents a special problem not encountered during surface movement. Fitting an item into an aircraft or meeting certain tiedown provisions can in some cases be equated to loading a truck, ship, or rail car, but the factors outlined within this section do not correlate with corresponding situations encountered in other modes of transportation.

30.1.4.2 **Pressure.** The reduction in atmospheric pressure encountered in air transport presents one condition which should receive substantial consideration by the designer. The requirements listed herein are based on a maximum flight altitude of 22,680 kg (50,000 ft). Therefore, it is possible that a sealed container at this altitude will attain a differential pressure equal to the pressure on the ground minus the atmospheric pressure at 22,680 kg (50,000 ft). Current aircraft are pressurized at a maximum of 55 kPa (8 psi). However, under certain unplanned conditions, decompression can occur because of structural failure of the aircraft, such as the loss of a window or a malfunction of the aircraft air conditioning system. Future cargo aircraft may operate without pressurization. Both of these factors necessitate that sealed containers be able to withstand an internal pressure of 103 kPa (15 psi). Also, in certain packaging techniques, such as sealed plastic bags, the bags will expand and may rupture. Particular care must be exercised to assure that hazardous materials are maintained in confinement.

30.1.4.2.1 **Differential pressure.** For a perfectly sealed container, the differential pressure can attain a value of about 90 kPa (13 psi) at a 22,680-kg (50,000-ft) altitude. This does not take into consideration the temperature of the air within the void space of the container. For example, consider a sealed metal container of a volatile liquid that has been stored in the sun

Source: https://assist.dla.mil -- Downloaded: 2016-12-11T01:38Z
Check the source to verify that this is the current version before use.

for a prolonged period of time. There will be an excessive internal pressure due to the increased temperature within the container. Therefore, if this container is put aboard an aircraft and transported within a short period of time after its removal from storage, the resultant differential pressure in flight will consist of the difference between the high internal pressure and the decreased external pressure due to the reduced atmospheric pressure at the flight altitude. Assure that any container with volatile fluids will contain the maximum possible differential pressure without rupture.

30.1.4.2.2 **Pressure vs temperature.** Due to adjustment of the temperature within the container to that of the cargo area of the aircraft, the effect of the ground storage temperature will be minimized. Since this temperature adjustment will be relatively slow, it is a good practice to reduce the temperature within a container to that of the ambient air at ground level before it is loaded on the aircraft. (This may be done by storing containers inside, under cover, 24 hr before flight.) Standard pressure at various altitudes and temperatures is shown in table II.

30.1.4.2.3 **Glass bottles.** Contrary to popular belief, tests have shown that the reduced atmospheric pressure at altitudes has no effect that could result in bursting glass bottles. However, due to the possibility of breakage by undue rough handling, shipping volatile liquids in glass bottles should be avoided, or the bottles should be overpacked in sealed metal containers.

30.1.4.2.4 **Metal containers.** Metal containers of the following types are commonly air shipped and exhibit characteristics described as follows.

30.1.4.2.4.1 **Screw cap closures.** Containers of this type are used to package many flammable liquids. Tests have shown that this kind of closure will not leak air at high altitudes provided the container has a relatively new gasket. When a container has been in stock for a prolonged duration, the gasket, more often than not, will have a permanent set (loss of resiliency), and air or liquid leakage can result when transported by air. However, when gaskets have been replaced, as required, and screw caps closed securely and properly, no serious difficulty will result in the air transportation of a metal container with a screw cap closure. This situation applies to most vehicle fuel tanks.

30.1.4.2.4.2 **Friction top closures.** Tests have shown that no difficulty will result from using containers with friction top closures provided the contents are of a nonlubricating nature, such as paint or lacquer. When the contents are of a lubricating nature, loosening of the closure and spillage of contents can result; therefore, the closure on such containers will be secured by spot soldering or the use of parcel post clips.

30.1.4.2.4.3 **Drums.** Drums employing threaded, gasketed plugs present no problem.

30.1.4.2.4.4 **Cylinders.** Cylinders such as those used for compressed gases present no problem.

Source: https://assist.dla.mil -- Downloaded: 2016-12-11T01:38Z
Check the source to verify that this is the current version before use.

TABLE II. Pressures and temperatures at altitude.

ACTUAL ALTITUDE	STANDARD HOT ATMOSPHERE			STANDARD COLD ATMOSPHERE		
	MAXIMUM TEMPERATURE		PRESSURE	MAXIMUM TEMPERATURE		PRESSURE
FT	°F	°C	PSI	°F	°C	PSI
0	103.0	39.4	14.70	-60.0	-51.1	14.70
1 000	99.3	37.4	14.21	-45.0	-42.8	13.98
2 000	95.6	35.3	13.74	-30.9	-34.9	13.42
3 000	91.9	33.4	13.28	-15.0	-26.1	12.85
4 000	88.2	31.2	12.84	-15.0	-26.1	12.32
5 000	84.5	29.2	12.40	-15.0	-26.1	11.81
6 000	80.8	27.1	11.98	-15.0	-26.1	11.33
7 000	77.1	25.1	11.57	-15.0	-26.1	10.86
8 000	73.4	23.0	11.17	-15.0	-26.1	10.41
9 000	69.7	21.0	10.79	-15.0	-26.1	9.98
10 000	66.0	18.9	10.41	-15.0	-26.1	9.57
11 000	62.3	16.9	10.04	-18.9	-28.3	9.12
12 000	58.6	14.7	9.44	-22.8	-30.4	8.78
13 000	54.9	12.7	9.34	-26.7	-32.6	8.41
14 000	51.2	10.7	9.00	-30.6	-34.7	8.06
15 000	47.5	8.6	8.68	-34.4	-36.9	7.71
16 000	43.8	6.5	8.36	-38.3	-39.1	7.37
17 000	41.0	5.0	8.06	-42.2	-41.2	7.05
18 000	36.4	2.4	7.76	-46.1	-43.5	6.74
19 000	32.7	0.4	7.47	-50.0	-45.6	6.44
20 000	29.0	-1.7	7.19	-53.9	-47.7	6.15
21 000	25.3	-4.1	6.92	-57.8	-50.4	5.87
22 000	21.6	-6.4	6.65	-61.7	-58.1	5.60
23 000	17.9	-8.8	6.40	-65.6	-54.2	5.34
24 000	14.2	-10.1	6.15	-69.4	-56.3	5.09
25 000	10.5	-12.5	5.91	-73.3	-58.5	4.85
26 000	6.8	-14.8	5.68	-77.2	-60.7	4.62
27 000	3.1	-16.2	5.45	-81.1	-62.9	4.40
28 000	-0.6	-18.1	5.24	-85.0	-65.0	4.18
29 000	-4.3	-20.2	5.02	-85.0	-65.0	3.98
30 000	-8.0	-22.2	4.82	-85.0	-65.0	3.78
31 000	-11.7	-24.3	4.62	-85.0	-65.0	3.60
32 000	-15.4	-26.3	4.43	-85.0	-65.0	3.42
33 000	-19.1	-28.4	4.26	-85.0	-65.0	3.25
34 000	-22.8	-30.4	4.07	-85.0	-65.0	3.09
35 000	-26.5	-32.5	3.90	-85.0	-65.0	2.94
36 000	-30.2	-34.5	3.73	-85.0	-65.0	2.80
37 000	-33.9	-36.6	3.57	-85.0	-65.0	2.67
38 000	-37.6	-38.6	3.42	-85.0	-65.0	2.53
39 000	-41.3	-40.8	3.28	-85.0	-65.0	2.41
40 000	-45.0	-42.8	3.12	-85.0	-65.0	2.29
41 000	-44.5	-42.5	2.98	-85.0	-65.0	2.18
42 000	-44.1	-42.3	2.85	-85.0	-65.0	2.07
43 000	-43.8	-42.1	2.73	-89.0	-67.2	1.97
44 000	-43.2	-41.8	2.60	-93.0	-69.4	1.88
45 000	-42.7	-41.5	2.49	-97.0	-71.7	1.78
46 000	-42.3	-41.3	2.38	-101.0	-73.9	1.69
47 000	-41.8	-41.0	2.28	-105.0	-76.1	1.60
48 000	-41.4	-40.8	2.18	-109.0	-78.3	1.52
49 000	-40.9	-40.5	2.08	-113.0	-80.6	1.44
50 000	-40.5	-40.3	1.99	-117.0	-82.8	1.37

Source: https://assist.dla.mil -- Downloaded: 2016-12-11T01:38Z
Check the source to verify that this is the current version before use.

30.1.4.2.4.5 **Hermetically sealed metal containers.** These containers are frequently used for shipping many chemical and ordnance items. Tests have shown that properly constructed containers can withstand up to 103 kPa (15 psi) internal pressure with bulging being the only noticeable effect. Therefore, unless the containers are poorly constructed, the reduced atmospheric pressure of air shipment on such containers will not impose a hazard to flight personnel or aircraft.

30.1.4.2.4.6 **Vented systems.** When a container is to be transported open, that is, not sealed, it is subject to changes in aircraft cabin pressure. In the extreme case, explosive decompression can cause a pressure drop of as much as 8 psi in 0.5 second. Therefore, it is essential that the vessel be designed with adequate vents to maintain a pressure differential (pressure inside vessel minus instantaneous cabin pressure) below that at which the container will burst. Vents shall be designed such that spillage of container contents is avoided. In some cases, where hazardous fumes could vaporize, an open vessel can be vented overboard. See the specific aircraft section within this appendix for details on overboard vents. In this case, the inside pressure of the vessel will be equal to the outside atmosphere. Thus, a vessel to be vented overboard must be designed to withstand a constant pressure differential of 8 psi.

30.1.4.2.5 **Vaporization of liquids.** Reduced atmospheric pressure affects the temperature at which liquids will boil. The measure of volatility of a liquid (tendency to evaporate) is known as vapor pressure. At ordinary ground level temperatures, liquids such as ether, alcohol, etc. have a relatively high vapor pressure and thus a low boiling point.

30.1.4.2.5.1 **Boiling point.** The liquid boiling point is defined as the temperature at which the liquid vapor pressure just exceeds the atmospheric pressure. Reducing atmospheric pressure at a constant temperature will increase that fraction of the total pressure due to the presence of the liquid. Boiling will occur when the total pressure equals the liquid vapor pressure at that temperature. Note that flight conditions present both lower atmospheric pressures and generally lower temperatures than found at ground level.

30.1.4.2.5.2 **Compartment temperature.** If the temperature in the cargo compartment is appreciably lower than the liquid temperature, the tendency for boiling will be minimized. However, since it will take some time for the liquid temperature to stabilize itself, always give consideration to the hazard of boiling. Maintenance of the lowest possible cargo compartment temperature, as well as maximum ventilation, is not desirable.

30.1.4.2.5.3 **Container sealing.** Since lower atmospheric pressure at a high altitude will cause increased evaporation of highly volatile liquids, it is important that containers remain airtight at high altitudes. Tests have shown that most containers presently used in the surface shipment of dangerous materials will remain sealed at high altitudes if they are tightly closed, have good gaskets, and are not dented or corroded, especially at the seams.

Source: https://assist.dla.mil -- Downloaded: 2016-12-11T01:38Z
Check the source to verify that this is the current version before use.

The most critical part of the container is the gasket. Many types of gaskets, especially paper or fiber gaskets (such as those used in 1-gal, rectangular, screw cap cans) are prone to taking a "set" and are not effective. Therefore, containers that have been on shelf storage should have new gaskets before they are offered for air shipment.

30.1.4.2.5.4 **Volatile liquids.** Some typical highly volatile liquids are as follows:

Acetone	Ethyl alcohol
Ammonium hydroxide	Ethyl chloride
Amyl alcohol	Formaldehyde
Benzene	Methyl alcohol
Carbon disulfide	Methyl ethyl ether
Ether	Methyl ethyl keton
Ethyl acetate	Propyl alcohol

30.1.4.2.6 **Vehicle fuel systems.** Vehicles currently being built must meet air pollution standards that have resulted in sealed fuel systems. This can present problems including collapse of fuel tank on descent. Make provisions for the fuel system to allow venting for air transport.

30.1.4.3 **Temperatures.** An estimate of the atmospheric temperature to be encountered in air transport is shown in table II. The maximum and minimum temperatures encountered at various altitudes are shown. Note that in surface transport, minimum temperatures may exist but are the exception rather than the rule. Minimum atmospheric temperatures can be controlled, however, in aircraft by using cabin heaters. Therefore, control of cargo compartment temperatures can be exercised where the materials shipped are susceptible to freezing. Maximum temperatures in air transport are lower than those encountered in surface transport and should not present any problems.

30.1.4.4 **Vibrations.** Vibrations encountered in aircraft occur over a much wider range of frequencies [0 to 0.9 MH_z (0 to 18,000 cpm)] than in surface shipments [0 to 1.08 MH_z (0 to 1500 cpm)]. The primary cause of concern regarding vibrations is their effect on the seals of glass and metal containers. In most cases aircraft vibrations must be considered for spring mounted vehicles.

30.1.4.4.1 **Containers.** Container seals and integrity must be considered in the normal vibrational environment encountered in flight. Tests have shown that high frequency vibrations are little cause for concern regarding screw cap closures. The precautions taken to prevent opening of screw-type closures in surface shipment are the same in air shipment. However, high frequency vibrations can cause "tin canning" or repeated flexing of flat metal surfaces of containers with a possible fatiguing and opening of the seams, resulting in the leakage of contents. To prevent this, pack metal containers to present a tight, firm fit in the exterior shipping container. This is standard practice for all type shipments and, therefore, does not deviate from normal packaging procedures.

Source: https://assist.dla.mil -- Downloaded: 2016-12-11T01:38Z
Check the source to verify that this is the current version before use.

30.1.4.4.2 **Vibration ranges.** In general, equipment designed and packaged to meet over-the-road conditions does not have to meet any special vibrational requirements for air transport. Detail vibration ranges vary from one aircraft to another; however, generalized frequency range charts have been developed and can be found in MIL-STD-810. For equipment that is extremely sensitive to vibrations, it is recommended that actual test measurements be made over simulated mission flight conditions.

30.1.4.5 **Gust loads.** During flight, load conditions are applied against the aircraft by turbulence. The restraint of cargo in the up, down, and lateral direction are required to prevent movement of cargo during this turbulence. These loads are uniformly distributed over any item of equipment. Details on meeting these criteria are provided in 30.1.5.

30.1.5 **Restraint criteria**

30.1.5.1 **Background.** Restraint criteria are established to secure cargo for the loads which may be encountered by an aircraft in three general types of conditions. These are:

a. Flight conditions. These criteria are based on the load factors an aircraft may experience while performing various maneuvers, flying through turbulence, or both, resulting in a combined effect.

b. Takeoff and landing conditions. These criteria are based on the load factors an aircraft may experience during takeoff, landing, braking, etc. These load factors are predominately in the forward and aft directions. However, these load factors are normally not significant when compared to the crash load factors discussed below.

c. Crash conditions. These criteria are based on the various load factors an aircraft may experience during any crash condition. These conditions could produce load factors in one or more directions (longitudinal, vertical, and lateral). The most predominant and significant of these load factors is the forward (longitudinal) crash load factor. Forward crash load factors can be generally grouped as follows: under 3 G, crash where damage is slight; 3 to 9 G, crash where the aircraft structure affords protection to the occupants; 9 to approximately 20 G, crash which is considered the survivable limit; and 20 G and above, which is considered a nonsurvivable crash.

30.1.5.2 **Airframe/restraint system.** To design to meet these crash loads and to provide the proper restraining points, an understanding of crash survival is required. There are generally two aspects to crash survival. One is related to the airframe capability to remain intact, and the other is related to the occupant/seat-strength/restraint-system capability. Since the imposed crash forces are dependent upon the velocity changes that occur and the related deceleration forces, it is possible to present the limits of structural/restraint capability in these terms. Similarly, the range of occupant deceleration tolerances reaches beyond the point where initial injuries occur.

Source: https://assist.dla.mil -- Downloaded: 2016-12-11T01:38Z
Check the source to verify that this is the current version before use.

30.1.5.2.1 **Human tolerance.** The accelerated pace of research in the field of human survival has revised the train of thought regarding human tolerance to the airplane crash environment. The human is quite tolerant of the crash environment and the survival rate should be higher. This fact poses a number of new considerations for the airframe designer. Existing crash requirements are decidedly concerned with occupant safety and survival but only within the framework of existing airframe strength. Relatively new research has shown that survival potential can be greatly increased with minimal airframe weight and cost penalties. ASD-TR-73-17 states that: "Death and severe injury can be prevented in any crash unless it is violent enough to disintegrate the cabin structure. Sound detail design in the cabin is the preventive. The tacit assumption of the hopelessness of designing for crash survival gradually is being replaced by the realization that the anatomy of man is rugged enough to withstand impact greater than any which can be transmitted through the structure of a current airplane. The key to improving survival chances is in designing the tiedown of passengers and loose equipment up to the ultimate load factor of the airframe. The report also notes that even though the "airframe structure is stronger than the human body, it is also much heavier and usually subjected to more pounds of decelerative force". A deceleration which is within human G tolerance will destroy an airplane. Higher crash load human tolerance places a burden on the equipment designer to insure his item is built to meet the minimum crash considerations and at higher levels provide special additional protection.

30.1.5.2.2 **Airframe strength.** The interacting facets of crash survival, cargo restraint, and structural design require further clarification. When integrated, the common denominator of the interacting facets becomes the crash strength of the airframe. Once the protective "shell" provided by the airframe ruptures or the occupiable volume is encroached, survivable conditions rapidly deteriorate and efforts to improve survivability by improving the restraint system become futile.

30.1.5.2.2.1 **Crash factors.** An absolute definition of airframe crash strength is elusive. Many variables are involved. The strength level of a current-day pressurized fuselage will tend to rupture when the longitudinal acceleration buildup reaches an average 8 or 9 G level. Higher accelerations can be tolerated if the duration is sufficiently short. Full-scale crash tests of transport-type aircraft show average deceleration levels ranging from 5 to 9 Gs. Much higher accelerations are experienced locally and can range upward to about 40 Gs for durations of generally less than 0.2 sec. The actual values depend in part on the impact velocity and impact angle. The dynamics of the airframe contibute to the overall response and generally cause the very high localized responses noted during instrumented crash tests.

30.1.5.2.2.2 **Acceleration levels.** The higher acceleration levels are generally associated with the crew compartment near the nose and when combined with the dynamic response of the human body account for the 40 G crew seat installation criteria. Accelerations are generally less in the passenger compartment and the criteria vary with the type of seat they are applied to; a load of 16 to 20 Gs is the nominal installation level. Current criteria do not associate these installation factors with a time duration; all specified crash factors are applied statically.

Source: https://assist.dla.mil -- Downloaded: 2016-12-11T01:38Z
Check the source to verify that this is the current version before use.

30.1.5.2.3 **Restraint levels.** The design strength requirements for fixed equipment and tiedown fitting carry-through structure have been defined by the average 8 or 9 G levels associated with the fuselage breaking strength since the fuselage ceases to provide maximum occupant protection following rupture. This acceleration level can be considered as a reasonable compromise, partly because of the practical limits associated with the restraint of cargo for occupant protection, but primarily for the following reasons: cargo is seldom "rigidly" tied down as are seats and the relative motion of the cargo allows the restraint system to absorb the higher magnitude short duration loads; cargo restraint systems are generally more redundant in terms of connecting load paths than are seat installations; restrained cargo provides interference for loose cargo; partial failures in a cargo tiedown "chain" are not as direct a threat as a partial seat failure would be to the occupant.

30.1.5.2.3.1 **Restraint requirements.** In light of recent findings concerning human tolerance, MIL-A-008865 (USAF) has been revised in the area of restraint requirements for miscellaneous equipment and cargo tiedown hard points to be consistent with seat installation requirements. This was done to provide a more equal measure of protection consistent with human tolerance. While the magnitude of the revised factors is approximate, it is desirable that the requirements should be stipulated as a dynamic rather than a static requirement to be more consistent with the crash environment and the response of restrained cargo to that environment.

30.1.5.2.3.2 **Nonhazardous restraint requirements.** Structural specifications also recognize circumstances when occupants would not be in any direct danger from loose equipment or cargo during a crash or their egress from the aircraft prevented in an emergency. Therefore, the design requirements for these items are considerably less. In this case, the restraint requirements are 3 G (2.0 G x 1.5 Factor of Safety) in the forward longitudinal direction. The 3 G level provides restraint for airplane decelerations associated with maximum braking combined with full thrust reversal, landing short, landing overruns, skidding off runways, tire blowouts and gear collapse. The 3 G level affords protection to the airplane and the cargo by minimizing damage to both during such emergencies.

30.1.5.3 **Operational restraint.** Operational restraint problems invariably concern the level of restraint required for cargo tiedown because of the inappropriate separation of two distinct requirements. One requirement is airframe design to provide a level of crash protection. The other is the operational requirement to secure cargo to specified levels of restraint. A conflict arises when the maximum structural design requirements are applied as fixed operational cargo restraint requirements. The two are compatible, but they are not necessarily interchangeable under all circumstances. Operational requirements can vary considerably depending on the cargo and the mission, especially in combat, and they should not be stereotyped.

Source: https://assist.dla.mil -- Downloaded: 2016-12-11T01:38Z
Check the source to verify that this is the current version before use.

30.1.5.3.1 Design requirements. Both operational and structural design requirements have a basic concern for occupant safety. The choice is between:

a. Providing a structural level of safety or measure of protection commensurate with the occupants' ability to withstand the nonfatal physical forces, and

b. Providing a level of safety consistent with certain operational requirements.

These choices can result in equally unsatisfactory alternatives. Structural requirements attempt to provide a realistic compromise by providing a cargo tiedown strength level consistent with the basic airframe strength, but not necessarily consistent with the upper level of human tolerance. Similarly, operational tiedown requirements are variable and the level of occupant safety that can be provided is often mission dependent.

30.1.5.3.2 Restraint rationale. In many instances, the using commands find it is impractical to tie cargo down to structural design limits. Cargo tiedown requirements are tempered by definite operational limitations which must be considered. For example, certain types of cargo are known to break apart at very low G levels; the cargo may be so massive that impractical amounts of chain and cable would be required to restrain it to high G levels; combat conditions may not allow time to secure cargo as positively as would otherwise be desired; the cargo may cover the majority of the available tiedown fittings, leaving too few exposed for adequate restraint. As difficult as the operator's problem is, the circumstances provide no direct justification for the structural designer to lower the design requirements below a reasonable safe level. Adequate structure must be provided for occupant safety for the many circumstances which do allow its use.

30.1.5.4 Restraint flexibility. Although in an engineering sense, an occupant can be reasonably well protected and restrained to almost any G level within human tolerance, there are operational circumstances which require restraint flexibility and appropriate options should be provided. For example, many decisions arise that are of a tactical nature based upon immediate circumstances. If absolute tiedown safety with respect to cargo cannot be provided to passengers utilizing an available restraint system, it must be recognized that in a crash environment the risk to passengers increases as the level of restraint provided for the cargo decreases. If it is impractical or impossible to restrain cargo to crash level loads, the additional risk must either be accepted or the passengers should not be carried, or the passengers can be separated from the cargo by being seated behind the cargo, or the flight must be postponed or delayed until better circumstances prevail. The required operational flexibility can be a least partially achieved by a cargo restraint net placed forward of all cargo with cargo restraint to a low level. This net is used as an auxiliary restraint system to more reliably contain cargo to a CG level or higher and prevent its forward movement into passengers or crew.

Source: https://assist.dla.mil -- Downloaded: 2016-12-11T01:38Z
Check the source to verify that this is the current version before use.

30.1.5.4.1 **Design factor.** Another factor that allows use of low restaint systems can be accomplished through aircraft design. By placing crew and passengers above the cargo deck, as in the case of the C-5A, in a crash condition cargo would move out the front of the aircraft but would not cause any deaths.

30.1.6 **Restraint techniques**

30.1.6.1 **Current criteria.** The currently directed design criteria for restraint of air transportable equipment are as follows:

a. Forward, 3 G

b. Aft, 1 1/2 G

c. Lateral, 1 1/2 G

d. Up, 2 G

e. Down, 4 1/2 G

The directions are relative to the aircraft. When an item of equipment can be placed in an aircraft in more than one direction, the highest restraint requirement applies. For example, a truck that can be driven on or backed into the aircraft must meet 3 G in both fore and aft directions.

30.1.6.1.1 **Nuclear systems.** Restraint systems for nuclear weapons are the same as those listed for general cargo with one exception. The upward load factor is raised to 3.7 G.

30.1.6.1.2 **Vehicles.** Certain vehicles are so constructed that each major component part must be tied down. An example is the truck-mounted crane. The crane is mounted on the truck chassis using a large diameter kingpin. There are no provisions to prevent the kingpin from becoming disengaged in vertical accelerations, so both the truck chassis and the crane must be independently designed to be secured to the aircraft. All major components of such vehicles must be viewed in this respect. The entire vehicle including any additional cargo must be fully restrained at its gross transported weight. Loose items such as tool boxes and other cargo must have provisions to be secured to the frame of the vehicle. The following is a typical list of items that fall within this category:

a. All cargo in vehicles

b. Spare wheels

c. Stake panels on stake body trucks

d. Tools and tool box covers

e. Machines and tools in shop trucks

f. Dump truck bodies (hydraulic or mechanical lift mechanisms)

Source: https://assist.dla.mil -- Downloaded: 2016-12-11T01:38Z
Check the source to verify that this is the current version before use.

g. Cranes or booms on wrecking trucks, etc.

h. Towing chains, pinch bars, etc.

i. Bulldozer blades and blade attachment latches.

30.1.6.2 Applying restraint. The following rules and principles are applicable in restraining air cargo.

30.1.6.2.1 Force loading. A force loading is a uniform application of a pressure against a body. The cargo must be designed to withstand the uniform load as listed in 30.1.6.1. For example, all components of a vehicle must be secured to the next larger component or frame at the various G levels. In most vehicles the transmission is secured by bolts vertically to the frame. These bolts would have to hold it in place during a 4 1/2 G downward load or in a shear for fore, aft, or lateral loads. If the unit weighs 90.1 kg (200 lb), the bolts would have to meet a total vertical force of 408 kg (900 lb) and a shear force of 272 kg (600 lb). These types of force loads are met through normal construction of the vehicle without any additional effort. However, in certain cases, the equipment may require some additional design effort to meet this criteria. Again, looking at the vehicle, the windshield may not meet the 3 G force without popping out. It is impractical to tie down individual components of an item (such as a truck or helicopter). Therefore, to simplify the item tiedown, design for securing individual components.

30.1.6.2.2 Accompanying load. Where equipment can carry additional load or is moved in a configuration where its weight is increased, the restraint system must be developed at the highest possible gross weight. Again, vehicles provide an excellent example. A tank equipped for combat will have fuel and ammunition. The tank must have provisions for securing the ammunition and total weight would have to be secured to the aircraft. This applies to any load placed on or into a larger unit. The vehicle tie down provision for additional cargo must meet the same provision as for the unit itself.

30.1.6.2.3 Palletized cargo. The cargo compartment logistics restraint rails and detents provide all the restraint necessary for cargo loaded on standard 463L pallets provided the cargo is attached to the pallet to meet the required restraint criteria established for the aircraft loading configuration. If the applicable nets are used to secure the load to the pallet, and if the load does not exceed the rated load for the pallet when loaded and locked into the airplane restraint rail system, then the palletized load is properly restrained. When an item of equipment can be placed on a single pallet and is always transported in this manner, that equipment does not need to meet restraint and tiedown requirements. Small equipment that can be placed on a pallet and secured by a net is not required to meet the restraint criteria by itself. The pallet/net system provides the required restraint.

30.1.6.2.4 Fundamental principles. To restrain equipment, points of tiedown must be provided. Since details of tying down each unit of cargo vary with its bulk, weight, configuration, position in the airplane, and type of airplane, location of each tiedown point on the cargo will also vary according to its design and configuration. To properly design the tiedown points, a

Source: https://assist.dla.mil -- Downloaded: 2016-12-11T01:38Z
Check the source to verify that this is the current version before use.

general knowledge of tiedown fundamental principles and their application can provide the necessary guidance for the designer.

30.1.6.2.4.1 **Tiedown strength.** A fundamental principle of developing sufficient strength of tiedown is that the strap, chain, or cable must lead off in the general direction of the load to be restrained. This important point is illustrated in figure 16.

30.1.6.2.4.2 **Tiedown symmetry.** Unsymmetrical tiedowns permit load distribution which may ultimately result in tiedown device failure. This failure would result from the different load elongation rates of dissimilar materials or of identical materials of different length. Any material subjected to a tension load will elongate a given percentage of its length. Therefore, the greater the length, the greater the potential amount of elongation. If two tiedown devices of the same type and capacity are used to restrain a load in a given direction and one tie is longer than the other, the longer tie, with its greater elongation potential, will permit the shorter tie to assume the majority of any load which may develop. If, as a result, the shorter tie should be overstressed and fail, the longer tie would be subjected to the full load and it too would probably fail.

30.1.6.2.4.3 **Tiedown unity.** Although all materials elongate in direct proportion to the applied load, different materials have different rates of elongation. Nylon devices elongate more readily than steel and, under tension, almost immediately permit the steel device to assume the majority of the load.

30.1.6.2.5 **Restraint angles.** Every tiedown device is rated to withstand a force exerted along the tiedown device as shown in view 1 of figure 17. When one end of the device is secured to a tiedown ring on the cargo floor, the longitudinal force will not be exerted parallel to the length of the device unless the device is attached to the cargo as shown in view 2. If attached as shown in view 2, all the rated strength will be available to prevent the cargo from moving in the direction of the longitudinal arrow. Because it is seldom practical to fasten a tiedown device as shown in views 1 and 2, they are usually attached at some point above the cargo floor as shown in view 3. When attached in this manner, only part of the rated strength will be available to prevent cargo longitudinal movement. Vertical restraint will be provided, but no lateral restraint will be provided. A compromise position as shown in view 4 generally provides restraint simultaneously in three direction: forward, vertical and lateral. Aft restraint is obtained by attaching tiedown devices symmetrically in pairs to the front of the cargo. However, when the attachment point on the equipment is utilized to achieve restraint in more than one direction as shown in view 4, that attachment point is required to withstand the vector sum of the restraint forces in the vector direction, acting independently.

30.1.6.3 **Applying restraint.** Tiedown devices attached to all types of cargo generally follow similar patterns (as in figure 18) because of the tiedown ring layout on the cargo floor and the restraint requirements. The following are the rules to be complied with when attaching tiedown devices to the cargo and the tiedown rings on the compartment floor.

Source: https://assist.dla.mil -- Downloaded: 2016-12-11T01:38Z
Check the source to verify that this is the current version before use.

30.1.6.3.1 Chains. Always compute the number of tiedown chains required. Apply aft restraint (tiedowns 1, 2, 5, and 6 in figure 18) in the opposite direction but at the same angle as the forward restraint (tiedowns 3, 4, 7 and 8). Use the same attachment point (points A, B, C, and D) on the cargo for attaching a forward and aft restraint chain if possible.

30.1.6.3.2 Fore and aft restraint. Always attach an even number of tiedowns (4 chains or 6 chains, etc.) in pairs as in figure 18 (1 and 2, 3 and 4, 5 and 6, 7 and 8, etc.) for forward or for aft restraint. Attach the tiedown chains in a symmetrical pattern by connecting to opposite fittings as in Figure 18 (A opposite B, C opposite D, E opposite F) across the cargo floor centerline.

30.1.6.3.3 Load CG. If the CG is remote from the geometric center of the load as in figure 18, add an additional tiedown (tiedowns 9 and 10) on each side of the load so that the CG will be between a pair of tiedowns.

30.1.6.3.4 Tiedown points. All vehicles must be tied down using points on the frame. However, up to half of the tiedowns may be attached to the vehicle axles. The designer must insure that the through structure to the axles can withstand the load factors when a vehicle is secured in this manner. Extreme caution must be exercised in vehicle placement to insure that tiedown chains or straps do not damage hydraulic or brake lines or electical cables. Figure 19 shows some typical methods for attachment of tiedown chains to a vehicle.

30.1.6.4 Turbulence effects. When vehicles are airlifted through turbulence and any other violent motions, they are subject to extreme acceleration forces that may allow pneumatic tires to compress, thus slackening tension on tiedown chains. When this slack-chain condition exists, the release of tire compression occurring simultaneously with the cessation or reversal of the acceleration force can result in the chain snapping taut on rebound and imposing abnormally high loads on tiedown rings, devices, and cargo attachment points. This same reaction may be experienced with vehicle springs flexing under like conditions. Any special-purpose vehicle equipped with soft tires (low pressure, off-the-highway tire, wide base with less than 552 kPa (80 psi) pressure for vehicles weighing over 9072 kg (20,000 lb) that are not designed for highway travel may impose stress conditions on the airplane. However, it is considered that vehicles weighing less than 9072 kg (20,000 lb) will not exceed the ultimate (safety tolerance) rated capacity of present tiedown equipment.

30.1.6.4.1 Bracing vehicles. Use sleeper shoring to brace vehicles weighing more than 9072 kg (20,000 lb) equipped with low pressure (soft) tires between the floor of the airplane and the vehicle chassis. When using sleepers, perform the following:

a. Place bracing flush with the chassis.

b. Check that the allowable floor contact area pressure will not be exceeded if the weight of the cargo rests entirely on the sleepers during the turbulence.

Source: https://assist.dla.mil -- Downloaded: 2016-12-11T01:38Z
Check the source to verify that this is the current version before use.

c. Secure sleepers so that the preset position will be maintained throughout the flight.

30.1.6.4.2 **Attachment point type and quantity.** Any item of equipment must have a suitable number of attachment points to allow restraint to the aircraft. Any attachment point should be designed to allow either end of the tiedown device to be used (see 30.1.6.4.3). The other tiedown device end is secured to the aircraft floor. In general, the aircraft has a tiedown grid pattern on 0.51 m (20 in.) centers with a strength of 4536 kg (10,000 lb). Tiedown points are also available at 11,340 kg (25,000 lb); see the particular aircraft sections within this appendix for details. The following items must be taken into consideration:

a. Since a load can move in any direction, at least four tiedowns, 1.57 rad (90°) apart, must be secured to an item. The total number is determined by the weight of the item. However, all attachment points should, whenever possible, be symmetrical to allow even loading.

b. The attachment point may be designed to accommodate as many tiedown devices as necessary to achieve the required restraint.

c. Chain and webbing tiedowns cannot be used to secure the same item.

d. If possible, position attachment points around the horizontal periphery of the equipment. Also place these points so that they are accessible to the equipment on the aircraft. If the equipment needs servicing during flight, the attachment points should be located so as not to block these areas.

e. Take into consideration vertical center of gravity of the equipment to prevent tipping during the crash condition.

f. When computing the number of attachment points, take into consideration losses through applying tiedowns at an angle.

30.1.6.4.3 **Tiedown devices.** The following is a list of tiedown devices used by the Air Force on cargo aircraft. The designer should consider the devices as described in items c, d, and e as the primary tiedowns used by the Air Force. Designing to connect with these devices will allow tiedown on any military cargo aircraft.

a. The CGU-1/B (see figure 20) tiedown is a 6.1 m (20 ft) long nylon web strap assembly rated at 2268 kg (5000 lb) (MIL-T-27260). The tiedown is interchangeable with the old MC-1 tiedown since the design criteria is identical for each. The CGU-1/B tiedown is equipped with a ratchet hook at one end with a handle that rotates 1.04 rad (60°) per ratchet, and moves 2.09 rad (120°) to release the spool for letting out webbing. The spool has a capacity sufficient to take up approximately 0.35 m (1 ft) of webbing after initial tensioning.

Source: https://assist.dla.mil -- Downloaded: 2016-12-11T01:38Z
Check the source to verify that this is the current version before use.

b. The MB-1 tiedowns (see figure 21) are similar in operation to the MB-2 tiedowns (see MIL-T-25959). Rated at 4536 kg (10,000 lb) capacity, the tiedown has a hook or attachment to cargo floor tiedown fittings. These tiedowns are used for all restraint in which 4536 kg (10,000 lb) capacity fittings can be used to restrain airdrop loads. The chain is 2.7 m (9 ft) long.

c. The MB-2 tiedown (see figure 21) is rated at 11,340 kg (25,000 lb) capacity (see MIL-T-25959). The MB-2 is similar to the old D-1, except for a hook instead of jaws to attach to the tiedown fitting, and a quick-release that permits detachment from the load regardless of chain tension. The chain is 2.7 m (9 ft) long.

30.1.6.4.4 Tiedown devices type and quantity. Base determination of the types and quantities of tiedown devices to be used in restraining cargo on the following considerations:

a. Appropriate strength rating to afford adequate restraint with the minimum number of tiedown devices.

b. Tiedown device strength rating must not exceed strength rating of available tiedown fittings or points of attachment to the cargo.

c. Tiedown device must be appropriate for the cargo to be restrained so that neither the cargo nor the tiedown device will be damaged.

d. Use like types and lengths of tiedown devices for a given item.

e. Attach tiedowns in a symmetrical pattern by using corresponding fittings on each side of the cargo floor centerline.

f. Attach tiedown devices to the cargo and remove all slack so that any tendency toward motion is immediately restrained.

g. Use nylon tiedown devices on crates, boxes, and other large units that might crush easily.

h. Do not use nylon tiedown devices over sharp edges.

i. Use steel tiedown devices on heavy objects which have attachment lugs or a hard surface for the chains to go around.

30.1.6.4.5 Tiedown pattern. Develop a tiedown configuration to check values to determine if adequate restraint can be met. A typical tiedown pattern of a D-6 tractor is shown in figure 22.

30.1.7 Components and constraints

30.1.7.1 463L Air Cargo System. The 463L system is an air cargo material handling system developed by the Air Force for efficient cargo handling, both on the ground and in the aircraft. This was the first system of its type developed and has become the basis for many systems used by commercial

Source: https://assist.dla.mil -- Downloaded: 2016-12-11T01:38Z
Check the source to verify that this is the current version before use.

airlines. The Air Force has updated the 463L system as necessary. The system consists of four separate but interdependent families of equipment. These families are described in the following paragraphs.

30.1.7.1.1 **Terminals.** The air cargo terminal is an intermediate point through which cargo moves in the 463L material handling system. Each air cargo terminal must have the capability to process and maintain an efficient and rapid flow of cargo at all times. Under emergency conditions, the terminal must be able to expand its capability so that it will not become a bottleneck in the material movement. Air cargo terminals vary in size and configuration depending on location, existing terminal buildings, and cargo volume. However, the function of each terminal is the same, i.e., to receive, ship, process, document, label, and sort cargo for air shipment.

30.1.7.1.2 **Cargo preparation family.** The cargo preparation family provides the material handling system with equipment which will enable palletization and restraint of air transport cargo. Provisions have also been made for protective containers for fresh and frozen goods. The following items are identified within this family.

a. Pallets and nets. The variety of cargo aircraft active in the military and commercial fleet presents a complex problem when considering aircraft loading door sizes and locations and floor bed dimensions of standard loading vehicles. To meet this need, three sizes of logistic support pallets (HCU-6/E, HCU-10/C, and HCU-12/E) and two sets of cargo restraint nets (HCU-7/E and HCU-15/C for use with the HCU-6/E pallet and HCU-11/C and HCU-16/C for use with HCU-10/C and HCU-12/E pallets) have been standardized.

b. Insulated food containers. These containers will provide thermal protection for periods of up to 20 hours without mechanical or chemical refrigeration. The three sizes of insulated food containers are:

1.04 x 0.61 x 1.14 m, 272 kg capacity, CNU-37B
(41 x 24 x 45 in., 600 lb)
1.27 x 1.04 x 1.14 m, 680 kg capacity, CNU-38B
(50 x 41 x 45 in., 1500 lb)
2.1 x 1.27 x 1.14 m, 1360 kg capacity, CNU-39B
(82 x 50 x 45 in., 3000 lb)

With an inside/outside temperature differential of 55.6°C (100°F), the maximum interior temperature change will be 11.2°C (20°F) for the small and medium-sized containers and 5.6°C (10°F) for the large container. These containers are modular in dimension for placement on either the 2.74 x 2.24 m (108 x 88 in.) or 1.37 x 2.24 m (54 x 88 in.) logistic pallets.

c. Master size insulated food container. These waterproof master size containers [2.11 x 2.4 x 1.78 m (83 x 96 x 70 in.)] are designed to maintain the temperature of preconditioned loads of temperature-sensitive cargo. One container uses the entire 2.74 x 2.24 m (108 x 88 in.) pallet, making possible unit loads of 1814 to 4536 kg (4000 to 10,000 lb). Mobile externally attached, 100-v AC refrigeration units are available for maintaining temperatures over extended periods.

Source: https://assist.dla.mil -- Downloaded: 2016-12-11T01:38Z
Check the source to verify that this is the current version before use.

d. Pallet coupling devices. When cargo is too large to be placed on one 2.74 x 224 m (108 x 88 in.) pallet, two or more pallets (up to a maximum of five) may be joined together. A 51-mm (2-in.) spacer is required between pallets to ensure the married pallets will mate with the aircraft restraint locks. The national stock number for the current cargo coupler is NSN 1670-01-061-0990 CT.

30.1.7.1.3 **Cargo ground handling family**. This family is concerned with the movement of palletized cargo between the air cargo terminal and the aircraft. The family is made up of mobile loading equipment of various types and sizes which have been designed to provide the versatility and efficiency required to effectively load/unload various types of aircraft. In addition, each is capable of being air transported to remote sites in emergency situations. The elements of this family are:

a. Truck, Aircraft Cargo Loading/Unloading, 18,144 kg (40,000 lb) Capacity, A/S32H-6. The common name is 40K loader. This truck is used at major command terminals for merchanized loading, unloading, and ground transport of air cargo while servicing low and high floor aircraft. The capability exists to handle palletized cargo and skidded and wheeled loads in a method resulting in minimum aircraft turnaround time.

b. Truck, Aircraft Cargo Loading/Unloading, 11,340 kg (25,000 lb) Capability, A/S32H-5. The common name is 25K loader. This truck is a lightweight, air transportable vehicle for use at intermediate class terminals to load and unload low and high floor cargo aircraft.

c. Truck, Aircraft Cargo Loading/Unloading, 11,340 kg (25,000 lb) Capability, A/S32H-19. The common name is 25K tactical air cargo (TAC) loader. This is an air transportable aircraft cargo transporter and loader designed for rough terrain use at forward bases as well as at established bases. (See figure 23.)

d. Truck, Lift, Fork, 4536 kg (10,000 lb) Capacity A/S32H-10. The common name is 10K forklift. This truck is used at air freight terminals to pick up, stack, transport, load, and unload cargo while servicing low and high floor aircraft. It is intended to handle the loaded 2.74 x 2.24 m (108 x 88 in.) pallet.

e. Truck, Lift, Fork, 2722 kg (6000 lb) Capacity, A/S32H-7. The common name is 6K forklift. This truck is used in the same manner as the 10K forklift; however, it is intended for handling the 1.37 x 2.24 m (54 x 88 in.) pallet.

f. Truck, Lift, Fork, 1814 kg (4000 lb) Capacity. The common name is 4K forklift. This truck is used at the air cargo terminal for handling items which are too heavy or bulky to be transported manually. This truck is also used where efficiency of operation will be increased.

Source: https://assist.dla.mil -- Downloaded: 2016-12-11T01:38Z
Check the source to verify that this is the current version before use.

g. Truck, Lift, Fork (Heavy Duty Forklift), 4536 kg (10,000 lb) Capacity, Hyster Model P100A-48-AF. The common name is heavy duty forklift. This vehicle is a commercial, heavy duty forklift truck which may be air transported and is suitable for use on all but soft or muddy terrain.

h. Truck, Lift, Fork (Rough Terrain Truck), 2722 kg (6000 lb) Capacity, A/S32H-13. The common name is rough terrain forklift. This truck is commercially developed possessing characteristics for operation on semi-rough terrain. As part of the 463L system it is utilized by commands for rough terrain operations. This truck will handle a fully loaded 1.37 x 2.24 m (54 x 88 in.) pallet.

i. Truck, Lift, Fork (Adverse Terrain), 4536 kg (10,000 lb) Capacity, Euclid Model 72-20, A/S32H-15. The common name is AT forklift. This is a commercially developed, diesel engine, 4-wheel drive, adverse terrain forklift truck. This truck can be air transported and is used in forward combat zones. Its heavy duty nature has also made this forklift desirable for use at existing bases.

j. Trailer, Aircraft Cargo Loading/Unloading, A/M32H-6. The common name is palletized cargo trailer. The palletized cargo trailer is designed to handle and provide mobility for one 2.74 x 2.24 m (108 x 88 in.) pallet or two 1.37 x 2.24 m (54 x 88 in.) pallets inside air terminals and on the parking ramp during aircraft loading operations.

k. Pallet Trailer Spotter Tractor, Type BCU-6/E. This is a battery powered tractor used to maneuver palletized cargo trailers within air cargo terminals.

l. Kit, Flatbed, Trailer, Standard M270 Flatbed Trailer. The standard M270 flatbed trailers with conveyor kit installed can be used for loading and unloading palletized cargo. This semitrailer has a 18,144 kg (40,000 lb) capacity for highway use or 10,886 kg (24,000 lb) capacity for cross-country use.

30.1.7.1.4 Aircraft systems family. The aircraft systems family provides the 463L system with the capability to rapidly load, offload, and restrain cargo in transport-type aircraft. This encompasses all equipment and components actually installed or placed in the aircraft for specific cargo handling and restraint. The 463L compatible aircraft handling systems for the C-130, C-141, and C-5 are described in the aircraft specific sections of this appendix.

30.1.7.1.5 Interrelationship. The entire system revolves around the 463L pallet (2.24 x 2.74 m (88 x 108 in.), HCU-6/E) and the use of roller conveyor systems. The equipment is designed to load and secure this unit. The designer can also use this system to effectively move other cargo; e.g., he could use the automatic locking system to secure pallet components used to build special platforms. Both the aircraft and ground families are discussed in this section.

Source: https://assist.dla.mil -- Downloaded: 2016-12-11T01:38Z
Check the source to verify that this is the current version before use.

30.1.7.2 Aircraft installed system. The system on board each aircraft is dependent on type and mission requirements. An aircraft with an airdrop mission will have an aft door while an aircraft that has the alternate logistics mission may have a side or front door. Basically, each aircraft equipped with the 463L system has a roller conveyor system that enables cargo to be easily rolled into the aircraft. The system has a rail that guides the pallet and is equipped with detents to lock the pallets in place. To convert the deck into a flat loading surface for vehicles, the rollers are either connected in sections for easy removal or mounted in trays that can be reversed.

30.1.7.2.1 Side loading aircraft. When designing equipment for movement on side loading aircraft, consider the 1.57 rad (90°) change of direction of that equipment to allow loading. These aircraft are primarily loaded with pallets. Vehicles and other equipment are usually palletized. The basic loading method is to move the pallet into an aircraft and then change direction by 1.57 rad (90°) on a transfer pad. This pad is a gridwork of 25.4 mm (1 in.) diameter steel balls on 127 mm (5 in.) centers. (See figure 24.) Any item with its own base that can be carried on these aircraft must be designed to move over these transfer pads without any deformation or damage to the base (MIL-P-27443). If a vehicle is to be driven on the aircraft, it must have sufficient turning radius to maneuver into the aircraft. The available turning space is further reduced by curvature of the aircraft fuselage, as shown in figure 25. Side loading cargo aircraft are originally designed primarily for passenger service and do not provide the most suitable cargo handling system. Commercial freight aircraft generally fall into this category; however, the door size and aircraft system will vary on the same type of aircraft owned by different airlines. Refer to the CRAF section within this appendix for additional details.

30.1.7.2.2 Aft loading aircraft. An ancillary mission of Air Force cargo aircraft is an airdrop of supplies under combat conditions. This mission has resulted in the need for an aft door to allow extraction of the load during flight. This has resulted in special design of the roller/rail system to perform this mission. The combination of the logistics and airdrop needs in designing the aircraft has resulted in a system allowing the designer leeway in placing loads into the aircraft. It also results in a more rugged system due to more severe conditions that are incurred during airdrop. Some aircraft such as the C-5, also have the capability to accept loads through a forward door; this aircraft uses the same type of rail system. The same basic system is used in the primary USAF cargo aircraft (C-130, C-141, and C-5) and is described in general terms.

30.1.7.2.2.1 Rail restraint system. Both vertical and lateral restraint for pallet and platform loads is provided by the conveyor frame assembly rails as shown in figure 26. The rollers on the aircraft floor provide vertical support for the loaded pallets or platforms. Forward and aft restraint is provided by mechanical detent locks in the conveyor rail assemblies. Two sets of controls actuate the locking and release mechanisms. One set of controls is provided for each side of the assembly as shown in figure 27. The positive control can be operated to (1) engage and lock all positive detent latches sequentially, starting at the forward-most latch, (2) unlock and disengage all positive detent latches simultaneously, (3) unlock and disengage all

Source: https://assist.dla.mil -- Downloaded: 2016-12-11T01:38Z
Check the source to verify that this is the current version before use.

positive detent latches sequentially, starting at the aft-most latch, and (4) retain detents in an unlocked position until relocked. For example, each positive detent on the C-130 aircraft, when engaged, is capable of providing a restraining force of 9090 kg (20,000 lb) forward and 4540 kg (10,000 lb) aft. When unlocked, latch detents will retract into the rail due to aft movement of the platform. Each pressure detent latch has a constant forward restraining force of 9090 mkg (20,000 lb) and a variable aft restraining force of 114 to 1820 kg (250 to 4000 lb). The pressure latch detents are spring loaded. When the pressure latches alone are engaged, the pallet or platform is restrained in the aft direction an amount equal to the force preset in the spring. An adjusting bolt and an indicator are provided on each latch to adjust for the desired spring tension. The latch assemblies are provided with a bypass mechanism to bypass any malfunctioning latch. Positive latches which are engaged and locked cannot be bypassed. However, to facilitate the loading of pallets and platforms, the inboard flange part of the aft sections of the rail system is flush with the inboard rail surfaces which are fitted with manually operated, retractable flanges to provide vertical restraint after loading. The major disadvantages of this system are:

a. Nonuniform distribution of the load on the top surface of the platform results in unequal loading of the rollers. In general, the inboard rollers support most of the load. However, the platform undersides and the aircraft floor are not perfectly flat and the rollers are not perfectly round, directly contributing to the loading problem.

b. Individually, the detent locks are very precise and perform satisfactorily. However, when more than one lock is engaged, unequal loading of the locks occurs due to the tolerance buildup in the pallet detent spacing. The systems between aircraft are extremely similar. The main difference is the strength of detents. Another feature of the system is the ability to remove the rollers and in some cases the rails to provide a flat floor. This clear area varies from one aircraft type to another.

30.1.7.3 **Ground cargo handling equipment.** To a degree, a large part of this equipment is similar to the aircraft rail system. The loaders are equipped with roller conveyors and locking systems to allow movement on and off the loader into the aircraft. Figure 23 shows the typical configuration of a loader. The loader is capable of carrying both pallets and platforms and has an adjustable deck elevation to meet the various aircraft. Another main item of equipment is the 4536 kg (10,000 lb) forklift capable of lifting a 463L pallet from either direction. The aircraft can be directly loaded by this vehicle or the equipment can be placed onto one of the loaders. One problem that exists with the loaders and aircraft system is the non-standardization of roller locations. Other equipment consists of docks made of rollers on a metal framework used for storage allowing quick transfer to a loader. Flatbed trucks with roller decks are also used to transfer loads to loaders and aircraft as shown in figure 28.

Source: https://assist.dla.mil -- Downloaded: 2016-12-11T01:38Z
Check the source to verify that this is the current version before use.

30.1.7.4 Pallets

30.1.7.4.1 Standard 463L pallet. The 463L pallet is built in accordance with MIL-P-27443. Three pallet sizes are covered in MIL-P-27443, but only the HCU-6/E [2.24 x 2.74 m (88 x 108 in.) unit] is used on the C-130, C-141, and C-5 aircraft and is the size to be considered for design for these aircraft. The HCU-6/E pallet is illustrated in figure 29 showing miscellaneous cargo or troop baggage tiedown using HCU-15/C and HCU-7/E cargo nets. In this apendix, all references to pallets apply to HCU-6/E. The pallet is constructed of a corrosion-resistant aluminum surface with a balsa wood core. A lip forming an outside frame with indents to match the aircraft rail system and a shape to ride under the aircraft rail is shown in figure 26. This lip holds 22 tiedown rings for securing the cargo nets. The tiedown rings are capable to 4.19 rad (240°) of free movement in a vertical place that intersects the pallet edge at a right angle. The tiedown ring capacity is 3402 kg (7500 lb) in any direction. Pallet dimensions are 2.74 x 2.24 m (108 x 88 in.) and the weight is approximately 132 kg (290 lb) with a usable area of 2.64 x 2.13 m (104 x 84 in.) and a loaded height of 2.44 m (96 in.). The maximum allowable puncture load for the pallet is 1.724 MPa (250 psi) up to the 4536-kg (10,000-lb) maximum capacity. Loads that exceed the 1.724 MPa (250 psi) limit must be shored to reduce the load per square surface unit to the maximum allowable. Loads must be positioned symmetrically so that the center of gravity (CG) of the load falls within 0.305 m (12 in.) of the lateral centerline and 0.355 m (14 in.) of the longitudinal centerline of the pallet. If the load is concentrated on one side of the pallet, an equal weight must be placed on the opposite side to permit the common CG of both loads to fall within the 0.609 x 0.711 m (24 x 28 in.) rectangle in the pallet center. The pad area of all wheeled items must be measured to ensure that marginal wheel loads do not exceed the 1.724 MPa (250 psi) limit. Shoring may be used to increase contact-bearing surface and thereby reduce wheel pressure per square inch. Shoring affects only loads positioned on the pallet surface and provides a load spreading effect as defined in 30.1.3.1.1. (The pallet itself should never be considered as shoring. The construction within the pallet does not permit load spread.) Caution must be exercised in air transporting steel-wheeled vehicles. Due to the thin ribbon line contact longitudinally, it is recommended that protective shoring be used for all steel-wheeled loads. The maximum contact area of a single bare steel wheel on the pallet will not normally exceed one square inch and direct contact may damage the pallet in flight.

30.1.7.4.2 Stacking height. The normal stacking height of cargo for a pallet load is 2.44 m (96 in.). This can be exceeded to 2.54 in. (100 in.) for C-130 and C-141 aircraft when the maximum pallet cargo weight does not exceed 3629 kg (8000 lb).

For oversize single unit items to be secured to the cargo floor, the height limitation is 102 inches above the floor.

For the C-5, a single unit item can exceed the 2.44-m (96-in.) limit to 2.74 m (108 in.) for aft loading and 3.96 m (156 in.) for forward loading. Restraint cannot be achieved using standard nets.

Source: https://assist.dla.mil -- Downloaded: 2016-12-11T01:38Z
Check the source to verify that this is the current version before use.

30.1.7.4.3 **Pallet tiedown.** Since the pallet is constructed of balsa wood it cannot be used as a base for other equipment that must be secured to it. Equipment can be permanently attached to the pallet through the use of the existing pallet tiedown rings.

30.1.7.5 **Aerial delivery platforms.** Three platforms are currently available for use on board USAF aircraft. These platforms are shown in figures 30, 31, and 32. The platforms can be used for both logistics and aerial delivery. These platforms also have the unique quality of being modular and are assembled from components. The components can be effectively used in other designs, such as bases for special equipment to be placed in aircraft rail systems. In many applications, use of these components can result in cost effective design. Use of proven hardware increases the chance for success. The three platforms are described in the following paragraphs.

30.1.7.5.1 **Type II modular platform.** The Type II platform, figure 30, was designed for use with the 463L system in the airdrop mode. The platform has an overall width of 2.74 m (108 in.) and can be assembled under field conditions into lengths of 2.44, 3.66, 4.88, 6.10, and 7.32 m (8, 12, 16, 20, and 24 ft). The platforms consist of aluminum-balsa sandwich-constructed panels, 1.22 m long, 2.64 m wide and 66.7 mm thick (48 in. long, 104 in. wide, and 2 5/8 in. thick). The side rail is provided in 2.44-, 3.66-, 4.88-, 6.10-, and 7.32-m (8-, 12-, 16-, 20-, and 24-ft) lengths, to be able to form the various length platforms. The side rails are riveted to the short sides of the panel to assemble the airdrop platform. The side rail has a groove on the lower inside for engaging the groove on the short side of the panel. These are two rows of evenly spaced holes along the length of the side rail. The holes in the lower row are spaced to line up with the holes in the short side of the panel; they are used for riveting the side rails to the panels. The upper row of spaced bolt holes is used for the mounting of the tiedown clevises. The outer flange of the side rail is notched to provide compatibility with the restraint mechanism of the aircraft rail system.

30.1.7.5.2 **A/E29H-1 (LAPES) platform.** The LAPES platform, figure 31, consists of components that are made of extruded aluminum with some steel hardware. The platform is used primarily for performing C-130 low altitude parachute extraction system (LAPES) airdrop. This platform can be used for standard heavy airdrop; however, for the C-141 aircraft, the four skids must be removed from the platform due to the lower profile aircraft rollers. The platform is 2.74 m (108 in.) wide and can be assembled for lengths of 2.44, 3.66, 4.88, 6.10, and 7.32 m (8, 12, 16, 20, and 24 ft). The following components comprise the platform (refer to figure 31) for item numbers):

a. Clevis (1) and Bolt (2) Assembly. Same as used on the Type II platform.

b. Skid set. The aluminum platform skid (3) is a trough-shaped aluminum extrusion cut squarely on both ends. The forward end of the skid has five holes drilled through it, of which the inner three are used to fasten the skid end caps (4) to the skid, using three screws (5) and locknuts (6). The outer two holes on the forward end of the skid are used to fasten the skid into place. Running the length of the skid on the upper horizontal surfaces are two rows of holes forming groupings of four holes on 0.610 m (24 in.) centers.

Source: https://assist.dla.mil -- Downloaded: 2016-12-11T01:38Z
Check the source to verify that this is the current version before use.

These holes are used to fasten the skids to the panels when the skids are utilized in assembling the LAPES configuration.

c. Pallet set. A pallet set consists of modular panel assemblies of aluminum with interlocking groove fittings running the entire width of each panel. Riveted on both ends of the panel are edge members with interlocking dovetail grooves and drilled with floating nut assemblies which align with matching holes and grooves in the side rail. Riveted on top of the panel are three recessed tiedown ring subassemblies. Along the front and rear edges of the panel are eight holes which are used to connect the panels to the skids with bolts when in the heavy duty extraction configuration. Each pallet set comes with eight bolts (8) and nuts (9) per panel. The overall panel assembly dimensions are 2.62 m wide, 0.61 m long, 63.5 mm thick (103 in. wide, 24 in. long, and 2 1/2 in. thick).

d. Side rail set. The extruded aluminum side rails (10) come in 2.44-, 3.66-, 4.88-, 6.10-, and 7.32-m (8-, 12-, 16-, 20-, and 24-ft) lengths. The outside surface of the side rail has a notched flange which is compatible with the aircraft rail locks. The inside surface of the side rail has an interlocking groove which mates with the edge member of the panels. Drilled into the side rail are two rows of holes. The upper row is for attaching tiedown clevises and bridle plates and the lower row matches the side rail attachment holes in the panel's edge member and is used to fasten the side rail to the panels using screws (11).

e. Bumper set. The extruded aluminum bumper (12), is common to all lengths of low velocity airdrop extraction platforms. The bumper has a vertical slot on the lower edge which mates with the forward edge of the first panel of the platform. Along the rear edge of the bumper are eight holes spaced so as to line up with the skid attachment holes on the first panel. The bumper comes with eight bolts and nuts (no. 14 and 9) which are used to fasten the bumper assembly to the platform.

f. Bridge plate set. The rectangular aluminum bridle plates (15) come in three sizes which are 229, 509, and 584 mm (9, 20, and 23 in.) long. The bridle plates are attached in pairs to the double holes in the upper row of holes in the side rail. The plates are attached using eight bolts (16) and nuts (17). The bridle plates are used only when the airdrop platform is to be assembled in LAPES platform extraction configuration.

30.1.7.5.3 <u>Type V platform</u>. The Type V platform (figure 32), like the A/E29H-1 platform, consists of components that are made of extruded aluminum with some steel hardware. The platform is used primarily for performing low velocity airdrop from the C-130 and C-141 aircraft and for performing LAPES from the C-130 aircraft. The platform is 2.74 m (108 in.) wide and can be assembled for lengths of 2.44, 3.66, 4.88, 6.10, 7.32 and 8.53 m (8, 12, 16, 20, 24, and 28 ft.). As indicated in the rear end view in figure 32, the platform side rail (3) is relatively flush with the top of the platform panel (2), unlike the Type II and A/E 29H-1 platforms. Another unique feature of this platform is that the roller pads (4) ride on top of the aircraft and cargo loader rollers. This results in the top of the panel (2) being 88.9 m (3 1/2 in.) above the top of the aircraft rollers whereas the top of the panels on the Type II and A/E29H-1 platforms are only 63.5 mm (2 1/2 in.) above the top of the aircraft rollers.

Source: https://assist.dla.mil -- Downloaded: 2016-12-11T01:38Z
Check the source to verify that this is the current version before use.

30.1.7.5.3.1 **Type V platform components.** The type platform consists of four major parts:

a. Panels (2). There are two types of panel assemblies, regular and rear. Both are 2.56 m (101 in.) wide and 0.61 m (24 in.) long and designed to interlock with one another. (See side view in figure 32.) The regular panel has provisions for two panel tiedown rings and holes for fastening the nose bumper. The rear panel has provisions for four tiedown rings and an extraction bracket assembly.

b. Side rails (3). Side rails are fixed in lengths of 2.44, 3.66, 4.88, 6.10, 7.32, and 8.53 m (8, 12, 16, 20, 24, and 28 ft.). The outer flanges of the side rails are notched to lock into the aerial delivery system (ADS) in the cargo compartment. These notches are on 0.25-m (10-in.) centers.

c. Roller pads (4). The roller pads, like the side rails, are fixed in lengths from 2.44 m (8 ft) to 8.53 m (28 ft) in 1.22-m (4-ft) increments. The pads are designed to provide a smooth, continuous interface with aircraft roller systems and material handling systems, and are bolted to the underside of the panels. (See figure 32 rear end view.)

d. Nose bumper (5). The nose bumper is affixed to the forward end of the Type V platform (as loaded in the aircraft) for LAPES airdrop missions only. (See figure 32, nose bumper side view.)

30.1.7.5.3.2 **Type V platform ancilliary equipment.** Ancilliary equipment required for use with the test item are as follows:

a. Multi-purpose link (6). This link is a multi-functional item that is used as (1) a suspension bracket to connect suspension slings to the four corners of the platform using a large suspension clives assembly (25), (2) tandem platform connector, and (3) LAPES system extraction sling connector.

b. Extraction bracket assembly (14). This bracket allows the extraction system, consisting of extraction bridle and extraction force transfer assembly (EFTA) to be attached to the platform for low velocity airdrop. The bracket consists of three main parts: a main operating bracket, a junction block, and a load-distributing panel bar. Note, the load-distributing bar is centered and secured inside the second to last cavity of the rear panel of the platform. The main support bracket is connected to the rear panel through the distributing bar with four 15.9-mm (0.63-in.) diameter bolts, washers and nuts (22, 23, and 24). The junction block fits in the 2-inch wide cavity in the support bracket and permits the attachment of the EFTA in a horizontal orientation.

c. Panel tiedown rings. There are two tiedown rings per panel, except for the rear panel which has four tiedown rings. Each tiedown ring has a load rating of 3629 kg (8000 lb).

Source: https://assist.dla.mil -- Downloaded: 2016-12-11T01:38Z
Check the source to verify that this is the current version before use.

d. Clives assembly (7). The clives assembly is designed for a load rating of 4536 kg (10,000 lb). The clives assembly accommodates loading of tiedown straps over a straight 22.2 mm (0.875 in.) in diameter spool. The clives assemblies can be affixed to the platform side rails every 0.15 mm (6 in.) and up to four assemblies can be attached to the multi-purpose link. The clives assemblies, when attached and not in use, can be positioned in the recess formed by the side rail (3) and the panel assembly (2), so that a relatively flush platform top is maintained.

30.1.8 Pallet/platform design

30.1.8.1 Aircraft interface. The interface with the aircraft system requires special design considerations in pallet and platform design. Special vans and shelters can also have built-in systems to allow direct loading into the aircraft.

30.1.8.2 Pallet/platform bottom. The size and construction of a pallet is related to these two factors: type of aircraft and size of cargo. The 463L pallet is designed for use on a wide variety of aircraft and for movement of general cargo. This unit should be used wherever possible. In some cases it becomes necessary to design a unit to move a special item or make a pallet an integral base of an item of equipment. The pallet can be designed in a manner similar to the 463L or other materials may be used.

30.1.8.2.1 Size. For efficient use of the aircraft, the pallet should lock into the aircraft rail system. For use on the C-130, C-141, and C-5, the width of the pallet should be 2.74 m (108 in.) with indents cut into the rail as shown in figure 33. The pallet can be made into any length; this is limited by equipment to load the aircraft and the aircraft length. Normally, this would limit the length to 12.2 m (40 ft). Longer units have been built, but require special loading/unloading procedures.

30.1.8.2.2 Construction. A flat pallet bottom is highly desirable, but is required to be flat only in areas and directions where the pallet contacts rollers or ball casters. Roller positions of commonly used Air Force loaders and aircraft (C-130, C-141, and C-5A) are provided in figure 5. While a flat pallet bottom is desirable, skids may be used in proper positions within the pallet structure to fully contact rollers or loaders and aircraft. For example, the Type V skid positions will meet all 463L roller systems. Pallet flat bottoms must provide a continuous strength member in the direction of roller movement. This continuous strength can be designed by use of I-beams (over sheet metal) in the direction of roller movement. I-beams placed perpendicular to the direction of travel will result in hard and soft areas in the direction of roller travel and cannot be used (see figure 33) because of possible structural failure of the pallet. Structural failure can also occur when the pallet is crested. The pallet can teeter on a single set of rollers causing a high load at one point. Cresting the pallet causes longitudinal beam stress and the pallet must be designed strong enough to fully carry this kind of load. The pallet fully loaded cannot exceed roller limits and must meet restraint and flight load requirements. For example, a 4536 kg (10,000 lb) capacity unit would have to withstand a 4½ G downward force [20,412 kg (45,000 lb)] without yield while resting on the aircraft rollers.

Source: https://assist.dla.mil -- Downloaded: 2016-12-11T01:38Z
Check the source to verify that this is the current version before use.

30.1.8.2.3 Lip. The lip must be placed along the side of the pallet to interface with the aircraft system. This lip does not have to be placed on the fore and aft sides of the pallet unless it is to be used in the 2.24 m (88 in.) configuration, which is used on a few aircraft. The lip must meet the dimensions shown in figure 26 and figure 34.

30.1.8.3 Overall design. The design of a pallet is also dependent upon the mission use. A general cargo unit should have a flat, smooth top; however, a special purpose unit could be constructed using just skids and holding a fixture for any item of equipment. In building these special pallets, load distribution becomes critical. It cannot be assumed that any weight on a pallet is evenly distributed over the pallet. The pallet acts to a certain degree as a method of bridging rollers as shown in figure 35.

30.1.9 Shelter/van/container design

30.1.9.1 General. Shelters and cargo vans, including intermodel containers, are designed primarily for surface movement and therefore are 2.43 m (96 in.) wide. Whenever the unit is rarely transported by air, consider using the 463L standard pallet or airdrop platforms as an auxiliary base. Whenever air transport is a mission requirement, the unit can have design features to reduce auxiliary equipment. Whenever the unit is to be primarily transported by air, design the unit bottom to interlock with the aircraft rail system.

30.1.9.2 Base design. For the unit that can be placed on a pallet or platform, the unit should not have any bottom projections. A uniform flat bottom is not necessary; however, the load placement should not exceed roller loads as transmitted through the pallet. In the case of a van, the end walls could develop an overload condition. It is possible to shore up the rest of the van to prevent this end area from overloading the aircraft. Also, consider this when designing an integral bottom on a shelter or van. The bottom does not have to be built of uniform construction, but can have skids similar to the airdrop platforms or a hat section construction (see figure 36). When a van is 2.43 m (96 in.) wide, an adaptor extending to the rail and lock is required. To accommodate the safety aisle on aircraft such as the C-130, the unit must be offset. On aircraft with walkways, the unit can be centered. This adaptor can be attached to the van/shelter or designed to fold or retract into the container envelope. In either case, ensure that the vertical G loads applied to the body of the shelter or van do not cause a failure at the hinge point or a bowing that allows the unit to come out of the rail system. Two possible designs are shown in figure 37. A detachable unit can also be used; however, experience has shown if an item can be easily removed it can be easily lost. If a detachable side adaptor is the only alternative, provision should be made to secure the rail to the unit by using a holder on the roof.

30.1.9.3 Auxiliary equipment. Most shelters and vans are designed to carry auxiliary equipment or have built-in equipment for the mission of the unit. For example, communications vans will have electronics equipment built in and may have antenna stored in the unit during movement. The built-in equipment must be secured to the frame of the shelter to meet restraint requirements.

Source: https://assist.dla.mil -- Downloaded: 2016-12-11T01:38Z
Check the source to verify that this is the current version before use.

Any equipment stored in the vans must also be secured to meet the restraint requirements. This can be accomplished by placing tiedown rings within the van and securing the equipment to these rings. Holding stanchions can also be used for the equipment. However, any restraining system must follow the same general rules as outlined in 30.1.6.1.

30.1.9.4 Commercial vans. In many cases, commerical equipment such as land-sea containers can be modified to use as special vans. The most common land-sea vans are those built to meet the ISO standard within the US. These units must meet ANSI MH 5.1, which is a general standard. The actual design and construction of the container varies within the manufacturing industry. These containers offer a high degree of transportability on land and sea. For air transport, pallets must be used for movement due to the lack of a flat bottom. An air transport container has been developed by industry and is outlined in SAE AS 832. While this container has a flat bottom, it requires special land transport. A very limited number of these units is available. These containers are shown in figures 38 and 39. The containers are 2.44 by 2.44 m (8 by 8 ft) cross section with a length of 3.05, 6.10, 9.14, and 12.2 m (10, 20, 30, and 40 ft). The 6.10- and 12.2-m (20- and 40-ft) units are the most predominant. All containers and capacity of container carrying equipment are rated in twenty-foot equivalent units (TEU).

30.1.9.5 Container design details. The following descriptions correspond to container parts as shown in figure 38. Figure 39 provides standard container dimensions.

30.1.9.5.1 End frames. End frames are provided at both the front (A) and rear (B). These usually are welded assemblies of steel members with cast corner fittings (C) with a standardized pattern of handling sockets. For use aboard ship, the containers must meet a 6-high stacking requirement and racking on deck. This leads to the use of 6.4 mm (1/4 in.) material formed into a box section as a common design solution. Figure 40 shows additional details.

30.1.9.5.2 Side rails. Side rails (D, E) running longitudinally along the top and bottom of the container join the end frames together and mount the side panels (F). These members are usually aluminum; however, steel is also used. Most of the rail-to-frame joints are bolted. Figure 40 shows details of a typical extruded aluminum rail.

30.1.9.5.3 Side panels. The end frames and rails provide a support for the attachment of panels (F), basically sheet material. In the case of aluminum side panels, sheet-post construction is used, with the posts being a hat section type. Posts are spaced between 1 and 2 ft apart, and may be either exterior or interior, depending on where the operator desires to have the flush surface. Sheet material thickness of 0.062 in. is common, with the weight being 0.89 psf. The weight of stiffeners is quite variable, but a value of 0.92 lb per running foot has been computed for a representative extruded section. With posts spaced 2 ft apart, the weight of panel material is 1.8 psf. Aluminum panels are often augmented by a plywood interior liner which may be either half or full height. With a half-height liner, the average panel weight is approximately 2.2 psf.

Source: https://assist.dla.mil -- Downloaded: 2016-12-11T01:38Z
Check the source to verify that this is the current version before use.

30.1.9.5.4 **Fiberglass reinforced plastic/plywood panels.** Figerglass reinforced plastic (FRP)/plywood panels consist of a plywood core with an FRP overlay on each face of the panel. Most often, the fibers are in a woven, roving form (untwisted in a fabric) within a polyester matrix. The common thickness of plywood stock is 3/4 in. Total panel thickness is usually in the range of 0.84 to 0.88 in. The weight of such a sandwich panel is in the range of 3 to 3.2 psf, depending on the proportion of glass fiber in the overlay and the thickness.

30.1.9.5.5 **Steel panels.** Steel panels are primarily used on containers from foreign sources. Steel container sheet material is usually rigidized by corrugation, and separate posts are not added. Welding is used as the joining means. A typical design employs 18-gauge (0.0495-in.) sheet stock with corrugations of about 1.5 in. in depth. Such a panel fabrication weighs about 2.6 psf.

30.1.9.5.6 **Roofs.** The roof (G) is generally of the same material and construction as the side panels with only a few exceptions. Roof bows of aluminum units are often joined with adhesives. One-piece sheet material is preferred to maximize resistance to water entry from above. The roofs are designed to support two men walking across. For air transport, the roof must be reinforced or tiedown straps must be placed over the top.

30.1.9.5.7 **Bottom structure.** The understructure and the flooring transfer loads induced by dead weight and inertial reactions of the contents to the side rails. The aluminum cross members (H) are formed channels or extruded shapes with a depth on the order of 5 in. and a thickness of about 0.188 in. Steel is also used for these members, generally when the side rails are steel. The deck surface (I) is usually oak or softwood floorboard, shiplap jointed, and between 1 1/8 and 1 3/8 in. thick. Plywood is also used for flooring, in which case an FRP overlay with a silica sand finish may be applied. For air transport, the bottom presents the major problem because it is not a flat smooth surface. Thus the container cannot be moved in its present form by air transport since all air cargo systems are based on roller conveyors. A few containers have been built with flat bottoms but even these present problems. The corner fittings (C) are hard in comparison to the container bottom, resulting in damage to the roller conveyor during movement from soft bottom to hard corner. Also, the standard container corner is 1/4 in. lower than the bottom level. When a container is stacked (supported by the four corners), the bottom will deflect; however, the 1/4 in. spacing prevents the container from applying any pressure on another container other than through the corner posts. It has been found that the actual surface difference between the container and corner fitting bottom ranges from 1/4 to 3/4 in.

30.1.9.5.8 **Doors.** Doors (J) are most frequently made of heavy plywood bonded with a metal surface, referred to as plymetal. The thickness of the composite is in the range of 0.75 to 1 in. with the face material being about 22 gauge (0.031 in.) if steel and 0.040 in. if aluminum. Sandwich fabrications for doors may also have an aluminum exterior and a steel interior if the steel is not exposed to a highly corrosive atmosphere and at the same time resists the forces and abrasion of cargo impacting the end wall. Doors are generously proportioned for the further reason that when firmly engaged to the end frame, they significantly contribute to the container's resistance to racking forces.

Source: https://assist.dla.mil -- Downloaded: 2016-12-11T01:38Z
Check the source to verify that this is the current version before use.

Thus, locking bars, either one or two per door half, are securely anchored in keepers on the door and in camming locks on the end frame. In so-called anti-rack hardware, these locks restrain the bar end from play in all directions. Hinges complete the assembly.

30.1.9.5.9 Handling provisions. Standardized corner fittings (C) have elongated sockets on top to which are engaged connecting fittings of the spreader of a crane or mobile handling unit. It may be noted in the detail in figure 40 that there are protective plates in proximity to the top corner handling fittings to guard against damage when the spreader drops on a container top misaligned with the fittings. Similar sockets are on the undersurface of the bottom corner fittings to provide restraint when containers are on deck or on a land vehicle. Locking is performed by twisting the bar latch either manually or by remote actuation. The container's corner fittings also have openings on their sides to enable hoisting by hooks and slings at both the top and bottom corners. Additionally, forklift pockets (K) are provided to permit handling from the bottom by the tines of lift trucks. This mode of handling is losing favor and, as a consequence, pockets in the understructure of containers are becoming relatively rare. As illustrated in figure 38, four pockets are provided in the typical design. Usually the outer pockets are aligned with the forklift tines of a high capacity lift truck capable of handling a loaded container. The two inner pockets are used by lift trucks capable of handling only an empty container. Many containers with forklift pockets are for empty lift only.

30.1.9.6 Air movement of containers. Air transport containers (igloo) used in commerical air transport are not compatible with the military air cargo system. However, these units can be placed on 463L pallets and moved on to C-130, C-141, and C-5 aircraft. With increased dependence by commerical transportation on intermodal containers, the Air Force has developed methods to move these by air. The movement limits are provided in table III.

30.2 C-130 cargo design data

30.2.1 Aircraft and equipment

30.2.1.1 General. The C-130 series airplanes are four-engine, high-wing aircraft with primarily a tactical intratheater mission. The airplane is divided into two pressurized and air-conditioned compartments consisting of a flight station and a cargo compartment. There is a crew door on the forward left-hand side of the airplane; two paratroop doors aft, one on each side of the airplane; and an aft cargo door and ramp that open from the rear of the airplane. Foldup fabric seats are installed in the cargo compartment for use in troop operations. These seats are provided for 92 ground troops or for 64 paratroopers. Removable litter stanchions are provided so the airplane may be used for casualty evacuation. There are two arrangements for installing the litters for maximum usage. One arrangement is for 70 litters and 6 attendants and the other for 74 litters and 2 attendants.

Source: https://assist.dla.mil -- Downloaded: 2016-12-11T01:38Z
Check the source to verify that this is the current version before use.

TABLE III Intermodal containers.

	Transported weight capacity
SIZE	DESIRED AIRCRAFT LIMIT
8 x 8x 10 ft 2.63 x 2.63 x 3.28 m	22,400 lb 10,170 kg
8 x 8-1/2 x 10 ft 2.63 x 2.79 x 3.28 m	22,400 lb 10,170 kg
8 x 8 x 20 ft 2.63 x 2.63 x 6.1 m	44,800 lb 20,380 kg
8 x 8-1/2 x 20 ft 2.63 x 2.79 x 6.1 m	44,800 lb 20,380 kg
8 x 8 x 30 ft 2.63 x 2.79 x 9.85 m	56,000 lb 25,430 kg
8 x 8-1/2 x 30 ft 2.63 x 2.79 x 9.85 m	56,000 lb 25,430 kg
8 x 8 x 40 ft 2.63 x 2.63 x 13.13 m	67,200 lb 30,530 kg
8 x 8-1/2 x 40 ft 2.63 x 2.79 x 13.13 m	67,200 lb 30,530 kg

Source: https://assist.dla.mil -- Downloaded: 2016-12-11T01:38Z
Check the source to verify that this is the current version before use.

THIS PAGE INTENTIONALLY LEFT BLANK

Source: https://assist.dla.mil -- Downloaded: 2016-12-11T01:38Z
Check the source to verify that this is the current version before use.

30.2.1.2 Cargo compartment. The cargo compartment provides a cargo space normally 12.5 m long, 3.12 m wide, 2.74 m high (41 ft long, 123 in. wide, and 108 in. high). However, this full space is not available to the designer. Insulation in the wheel-well area results in a width of 3.04 m (119.5 in.). Further operational requirements restrict loading space as follows:

a. A 152 mm (6 in.) clearance must be maintained from the ceiling and side walls for loading.

b. A safety aisle must be provided on the left-hand side large enough to allow a man wearing a parachute to get to the rear of the aircraft.

c. Figure 41 shows the general cross section of the aircraft at both the rear door and wheel-well section. Figure 42 provides the allowable clear loading diagram for design. The rail system is permanently installed, reducing width at the base. Any item exceeding these dimensions may not be acceptable for air transport. The load must also provide the safety aisle area as shown in the diagram. The cargo compartment is divided into compartments as indicated in figure 43. In the aircraft, these are marked by the limiting fuselage stations. Figure 43 also provides the compartment strength and load capacities. The C-130 is designed with high strength areas (treadways) for loading vehicles into the aircraft. The location of the treadways differs from the early C-130 to those currently in service. The dimensions are provided for both; however, the designer should concentrate on the more current locations as shown in figure 44. For aircraft serial numbers AF53-3129 through 56-509 (early "A" models) the dimensions are 0.533 m (21 in.) wide and 0.737 m (29 in.) to each side of the aircraft centerline. For all other aircraft serial numbers AF56-510 through current models, the dimensions are 0.89 m (35 in.) wide and 0.38 m (15 in.) to each side of the aircraft centerline.

30.2.1.3 Aft cargo door and ramp. The aft cargo door and ramp (figures 41 and 45) can be opened to almost the full size of the cargo compartment. The exterior surfaces conform to the fuselage contour. They also form the undersurface of the aft fuselage. The cargo door, or upper part of the closure, is hinged at its aft end and opens upward and inward. It is hydraulic-cylinder actuated. When closed, the aft cargo door is locked by two latches, each engaging with a fitting on each side of the door. When open, the cargo door is approximately parallel to the top of the fuselage. An uplock is provided to hold the door in the open position. The ramp, or lower part of the closure, is hinged at its forward end and opens downward and outward. It is actuated by two hydraulic cyclinders, one on each side, and can be stopped in any position beween closed and open. The most frequently used positions will be fully closed, horizontal, and open. When closed, the ramp is locked by five hydraulically operated latches along each side. These latches engage with the structural members of the fuselage to lock the ramp closed. During airdrop, the ramp is supported in the horizontal position by two ramp supports (aerial delivery extension arms). These supports are attached to the fuselage structure at one end and to fittings on the sides of the ramp at the other. The fully extended supports will not permit the ramp to lower beyond horizontal. If the ramp is to be fully opened for ground loading, the ramp supports must first be disconnected. The supports are provided with removable pins to make it possible to detach the supports when necessary. In the ground loading

Source: https://assist.dla.mil -- Downloaded: 2016-12-11T01:38Z
Check the source to verify that this is the current version before use.

position, the aft edge of the ramp is held firmly in contact with the ground by two hydraulic cylinders to maintain cargo floor height. The ramp then presents an incline of about 0.244 rad (14°), up which vehicles can be driven. Nonskid material is applied to the upper surface of the ramp to provide good footing for personnel. In the horizontal position, the ramp is used for loading cargo from material handling equipment.

Auxiliary truck-loading ramps and auxiliary ground-loading ramps are used to bridge any gap between the ramp and the truck, platform, or ground. Fittings are built into the aft edge of the ramp to provide means of attaching the auxiliary ramps. It is possible and permissible to carry a load of up to 2268 kg (5000 lb) on the ramp during flight as long as the center of gravity of the loaded airplane does not fall outside the permissible limits and does not exceed the compartment strength limits. It is also permissible to place a load of up to 2268 kg (5000 lb) on the ramp while it is open, and then to close the ramp. The permissible load on the ramp of 2268 kg (5000 lb) is the total ramp load and includes the weight of the equipment that may also be installed (such as pallets, nets, dual rail and roller components, etc). Therefore, the weight of the allowable cargo load on the ramp is the 2268 kg (5000 lb) permissible load reduced by the weight of the combination of these items also carried on the ramp. The closed and locked ramp forms a 2.77 rad (159°) angle with the cargo floor.

30.2.1.4 **Auxiliary truck loading ramps.** Two auxiliary truck loading ramps [0.914 m long by 0.66 m wide (36 in. long by 26 in. wide)] are furnished with each airplane (figure 46a). These auxiliary ramps are connected to the ramp when it is in the horizontal position to bridge any gap between the ramp and the truck or platform from which the airplane is being loaded. These auxiliary truck loading ramps support the aft end of the airplane during loading from a vehicle or platform. The ramps have four hooks on the underside; the two outside hooks have latches on them. The ramps are firmly attached with these hooks to the fittings along the aft end of the ramp. The distance between any two of these fittings is 197 mm (7 3/4 in.). The positions of the auxiliary truck ramps can be changed inboard and outboard in increments of 197 mm (7 3/4 in.) each. The ramps should always be installed so the distance between them will match, as closely as possible, the width of the tread of any vehicle which will be driven over them.

30.2.1.4.1 **Allowable loads.** Any authorized loads may be loaded across auxiliary truck-loading ramps installed at equal distances from the ramp centerline. If the ramps are installed at unequal distances from the centerline, determine the allowable loads as shown in figure 47. The load limit for one truck loading ramp is 5670 kg (12,500 lb); for two truck-loading ramps, the limit is 11,340 kg (25,000 lb). When using only one truck-loading ramp, place it on the ramp centerline.

30.2.1.5 **Auxiliary ground-loading ramps.** Two auxiliary ground-loading ramps [1.68 m long by 0.533 m wide (66 in. long by 21 in. wide)] are furnished with each airplane (figure 46b). The upper surface of these ramps is covered with the same nonskid material that covers the ramp and cargo floor. When the ramps are not in use, they are stowed on the aft cargo floor. These auxiliary

Source: https://assist.dla.mil -- Downloaded: 2016-12-11T01:38Z
Check the source to verify that this is the current version before use.

ramps are hooked to the aft edge of the integral ramp when it is in the fully open position to bridge the gap between the ground and the edge of the integral ramp. The auxiliary ramps are hooked on the aft edge of the integral ramp to the same fittings as are used for the auxiliary truck-loading ramps. Since they are used only when the integral ramp is resting on the ground, there are no positive latches for attaching them. The auxiliary ground-loading ramps should be installed so the distance between them matches, as closely as possible, the width of the tread of any vehicle to be driven over them. They are installed an equal distance from the centerline of the airplane. The maximum load that may be imposed on the auxiliary ground-loading ramp is 2948 kg (6500 lb) per wheel or 5897 kg (13,000 lb) per axle.

30.2.1.6 Ramp height. The height of the ramp in relation to the ground varies from one aircraft model to another. Further, it is dependent on the aircraft load as the height will vary before and after fuel is placed on board. The height variation of the ramp is provided for each C-130 model in figure 48. If the aircraft is equipped with rollers, add 66.7 mm (2 5/8 in.) to all heights.

30.2.1.7 Floor. The floor of the aircraft entails a large variety of characteristics, such as treadway strength capability, tiedowns, and cargo handling systems. Because of the complexity and overlap with other aircraft components, these characteristics have been treated separately. Tiedown fitting locations are shown in figure 49. D-ring cargo tiedown fittings are installed on the cargo floor and the ramp.

30.2.1.8 10,000 lb capacity tiedown fittings. The tiedown fitting most commonly used is the 10,000 lb capacity fitting (figure 50). There are 175 of these D-ring type of fittings installed in cargo floor recesses in a pattern approximately 0.508 m (20 in.) on centers. There are 25 rows, numbered from 1 at the forward end of the cargo floor through 25 at the aft end. There are seven columns, lettered from A at the left side of the cargo floor through G at the right side. These markings are stenciled beside each fitting. Each 10,000 lb capacity fitting is capable of resisting a single load of 10,000 lb exerted along any radius of a hemisphere, the flat side of which is the surface of the cargo floor. It is also capable of resisting a combination of two loads applied simultaneously, as long as the resulting vector quantity of the two loads is less than 4536 kg (10,000 lb). When not in use, the rings fold into recesses just deep enough to keep the folded fittings from sticking up. The fittings are commonly used with tiedown devices which do not exceed the limits of the fittings. Some fittings are also used when seats are installed along the centerline of the cargo compartment.

30.2.1.9 5000- and 25,000-lb capacity fittings. Seven columns of 5000 lb capacity fittings lettered A through G are installed in the cargo ramp floor, except for C-130 AF53-3129 which has five. (See figures 49 and 50). Twelve sockets for 25,000-lb capacity fittings are installed in the cargo floor, except for C-130 AF53-3129 which has eight. The fitting sockets are plugged when not used. The fittings are stowed in a box aft of the paratroop door, under the flight station floor, and on the cargo compartment bulkhead.

Source: https://assist.dla.mil -- Downloaded: 2016-12-11T01:38Z
Check the source to verify that this is the current version before use.

30.2.1.9.1 **Tiedown devices.** Three types of tiedowns are supplied with the C-130 for fastening cargo. The type and number of cargo tiedowns carried will be determined by major air commands operating the aircraft. The following devices are available on the C-130: CGU-1/B, MB-1, and MB-2. Details on these devices are in 30.1.6.4.3.

30.2.1.10 **Roller conveyor systems.** All MAC C-130s have the A/A 32H-4A cargo handling system. This 463L-compatible system consists of rollers, guide rails, and locks.

30.2.1.10.1 **Dash-4A description.** The A/A32H-4A cargo handling system consists of eight outboard restraint guide rail assemblies and 20 intermediate conveyor frame assemblies (See figure 51). The outboard restraint rails provide vertical restraint and lateral guidance for the pallets or platforms, while rollers in the conveyor frame assemblies give vertical support and facilitate transfer fore and aft during loading and unloading. Forward and aft restraint is provided by mechanical detent locks in the conveyor frame assemblies. Two sets of controls actuate the locking and release mechanisms; one set of controls actuates the left-hand mechanism and one set actuates the right-hand mechanism.

30.2.1.10.2 **Outboard restraint rail assemblies.** The eight outboard rail assemblies are identified by section numbers. Sections 1, 3, and 5B are installed outboard left on the cargo floor; sections 2, 4, and 6B are installed outboard right. Sections 7 (left) and 8 (right) are mounted on the ramp deck (see figure 51). When the system is used aboard the C-130 early A model, section 5A is inserted between the rail sections 3 and 7; also section 6A is inserted between sections 4 and 8. The restraint rails are not removable for air transport operations.

30.2.1.10.3 **Conveyor frame assemblies.** The system includes 20 conveyors which are located between the outboard rails. Sections 9 through 14 are installed on the cargo floor, and sections 15 and 16 are installed on the ramp floor. (See figure 51). The inboard side of the conveyor rail is U-shaped for vertical restraint and horizontal guidance of pallets or platforms. To facilitate loading and airdrop, the inboard top flange of the rail is cut off on the aft portion of sections 3 and 4 and completely on sections 5, 6, 7, and 8. Two retractable flanges each on sections 5 and 6 provide vertical restraint when required.

30.2.1.10.4 **Detent latch assemblies.** The detent latch assemblies consist of right-hand detent latches and left-hand detent latches (See figures 52 and 53). There are 11 variable restraint detent latches mounted outboard on the right-hand rails, five on sections 2 and 4, and one on section 6. Each latch provides a constant forward restraining force of 20,000 lb and a variable aft restraining force of up to 4000 lb. An adjusting bolt and a load indicator are provided on each latch to adjust for the desired spring tension. When the aft force exerted against the detent exceeds the preset value, the detent will disengage and remain disengaged. A lockout pin is provided to keep the detent in the fully retracted and locked out position. There are 11 detent latches mounted outboard on the left-hand rail sections, five each on sections 1 and 3, and one on section 5. Each left-hand detent latch provides a constant restraining force of 20,000 lb forward and 10,000 lb aft.

Source: https://assist.dla.mil -- Downloaded: 2016-12-11T01:38Z
Check the source to verify that this is the current version before use.

30.2.1.10.5 Ramp detent assemblies and retractable flanges. The retractable flanges and ramp detent assemlies are used when cargo is to be mounted aboard indented pallets and restrained on the ramp deck. There are three retractable flanges each in sections 7 and 8 (figure 51) to provide vertical restraint for pallets loaded on the ramp. Also, there is one detent each in sections 7 and 8 to provide fore and aft restraint. Normally, these spring-loaded devices stay retracted outboard to prevent them from being engaged inadvertently. For use, they are pushed into position manually and held by latches. For release, the latches are removed simultaneously (in each section) by ramp emergency release handles, causing flanges and detents to retract.

30.2.1.10.6 Conveyor dimensions. The relative location of the rollers on either side of the aircraft centerline is shown in section 30.1, figure 5. The rollers are 57 mm (2 1/4 in.) in diameter by 121 mm (4 3/4 in.) wide. The height of the roller is 66.7 mm (2.625 in.) above the floor. The rollers are on 252 mm (10 in.) centers fore and aft in the aircraft. The Dash-4A rail configuration relative to the aircraft floor is shown in figures 54 and 55. The roller load limitations are in figure 43.

30.2.1.11 Power source. Seven 10-amp DC, 28-v, Hubell part 7526, receptacles are installed throughout the cargo compartment to provide power for heated blankets, fans, and other DC equipment. A 200-amp DC, 28-v receptacle is installed in the cargo compartment on the wall aft of the flight station to permit operation of an air cargo winch. Two DC receptacles are installed in the cargo compartment to provide power for iron lung operation. One of these is located on the left-hand side of the aircraft between the two windows forward of the paratroop door. The other receptacle is located on the right-hand side of the aircraft near the first window aft of the flight station. On C-130E aircraft only (AF61-2367 and up), three 115/200(208)-v, 400-cycle, three-phase AC receptacles (MS3102A18-10S) are installed in the cargo compartment to provide missile support power having a total load restriction of 5 KVA. One is located on the left side at FUS STA 427, and two are on the right side at FUS STA 290 and FUS STA 627. On C-130EH aircraft (AF62-1784 and up), a 115/200(208)-v, 400-cycle, three phase AC receptacle is installed in the cargo compartment on the wall aft of the flight station for operation of an air cargo winch. The AC receptacle is located next to the 200-amp DC receptable which is also provided for operation of the air cargo winch. See figure 56.

30.2.1.12 Venting. The C-130 is equipped with one vent located on the left side at FUS STA 642. This vent is the only vent on the aircraft and extreme caution must be exercised when using it to vent liquid oxygen to ensure that no petroleum residue exists. Provisions should be made for a purging kit when liquid oxygen or similar oxidizing agents are to be vented. Venting hose should have a 23.81-mm (.0937-in.) ID (inside diameter) to be compatible with all aircraft. Interface equipment for C-130 vent shall be provided by the Air Force.

Source: https://assist.dla.mil -- Downloaded: 2016-12-11T01:38Z
Check the source to verify that this is the current version before use.

30.2.2 Cargo requirements

30.2.2.1 Cargo loading. The loading method used for a specific item of cargo will normally depend upon its size, weight, and physical characteristics. All cargo carried in the airplane will be loaded by (1) straight-in loading over the horizontally positioned ramp from a truck or cargo loader, or (2) ground ramp loading using the auxiliary loading ramps. In either case, use the roller conveyors and restraint rails for palletized cargo. Palletized cargo, bulk cargo, or vehicles can be winched into the airplane using the portable electric winch or an external winch mounted on a vehicle. Self-propelled vehicles can be driven directly up the ramp and into loading position under their own power or can be winched into position by their own winches. The paragraphs on vehicles apply to all wheeled or tractor items of equipment.

30.2.2.1.1 Crated cargo projection limits. Some difficulty may be encountered when loading pallets of bulk cargo or vehicles up the inclined ramp, due to the distance the item projects toward the overhead of the cargo compartment (See figure 57). The allowable projection is determined by two factors: (1) height of the load and (2) height of the cargo compartment floor at the hinged line of the ramp. The allowable projection is measured from the centerline of the aft line of rollers on the roller conveyors. The height of the load is the total height including pallet or platform, if used.

30.2.2.2 Vehicle overhang and projection limits. Vehicle front and rear overhang, ground clearance, wheelbase, and the height of the ramp crest are the factors which must be considered to determine if a vehicle can be safely loaded (see figure 58). Four charts are included in figure 58 to determine clearances. The charts are:

a. Chart A - Ramp crest limits. Use to determine clearance between the ramp crest and the underside of the vehicle at wheelbase midpoint.

b. Chart B - Parking overhang limits. Use to determine clearance between aft end of vehicle after it is loaded and the ramp is closed.

c. Chart C - Loading overhang limits. Use to determine clearance at top of cargo compartment when loading long, tall vehicles with overhang.

d. Chart D - Vehicle projection limits. Use to determine interference between vehicle top and cargo compartment top (loading and unloading).

The height of the ramp affects most loading area limits. Under normal conditions of (1) fuel and cargo loading and (2) strut and tire inflation, the cargo floor at the ramp crest will vary in height from the ground. The hinge on the ramp is used as a convenient point for measuring this distance. Ramp heights specified in figure 58 refer to the distances from the ground to this hinge centerline. The field or loading area must be smooth and level.

30.2.2.2.1 Ramp crest limits. Vehicles having long wheelbases and low ground clearances may drag across the ramp when loading from the ground (see figure 58, chart A). The clearance available will be determined by (1) vehicle wheelbase, (2) vehicle ground clearance at its midpoint, and (3) cargo compartment floor height at the ramp crest.

Source: https://assist.dla.mil -- Downloaded: 2016-12-11T01:38Z
Check the source to verify that this is the current version before use.

30.2.2.2.2 **Parking overhang limits.** To make use of space available in the cargo compartment, it is sometimes desirable to park a vehicle with its wheels at the aft end of the cargo compartment floor (see figure 58, chart B). This position requires a portion of the vehicle to project into the area above the ramp. This projection is permissible if the overhang does not extend so far aft that it hits the ramp when the ramp is retracted. Figure 58, chart B, shows the maximum overhang which will clear the ramp when the aft wheel of the vehicle is placed at the hinge line of the ramp.

30.2.2.2.3 **Loading overhand limits.** Vehicles which have structures extending long distances past the front or rear axles may have difficulty in loading up the inclined ramp from the ground (see figure 58, chart C). This is especially critical on vehicles which have low ground clearance. Since vehicles will often be backed into the cargo compartment to facilitate offloading, the location of the overhang in determining clearance limits is referred to as being on the forward or on the aft end of a vehicle. Long overhang on the forward end causes the vehicle to run into the ramp before the wheels lift it up. Long overhang on the aft end causes the vehicle to drag the ground when the forward end rises as it goes up the ramp.

30.2.2.2.4 **Vehicle projection limits.** A high vehicle may be difficult to load up the inclined ramp if the maximum height is near the end of the vehicle and is forward of the first wheel going up the ramp. If the point of maximum height is behind the first wheel, then a full 2.59 m (102 in.) height can be loaded. Where loading appears marginal, load the vehicle straight in over a horizontal ramp. If this is not possible, load the end of the vehicle with the shorter overhang first. Use the graph on figure 58, chart D, to determine overhead clearance. When the combined values of vehicle height and vehicle overhang fall under the curve for a given ramp height, the vehicle can be loaded without interference at that ramp height. When the values fall above a curve, the vehicle cannot be loaded at that height. Before using the chart D graph, determine that the ground clearance, wheelbase, and overhang limitations are satisfied.

30.2.2.2.5 **Preferred loading.** Whenever possible, vehicles should be backed into the airplane so they may be driven forward to facilitate rapid offloading. Vehicles must be driven or backed aboard with transmissions set in the lowest gear and the transfer case or auxiliary transmission in low range and the vehicle in four-wheel drive. This results in better control and smoother starts and stops.

30.2.2.3 **Weight and balance.** The maximum weight that can be carried on any specific mission is limited by the maximum allowance gross weight, which includes the airplane's empty weight, number of crewmen, and the amount of fuel and oil aboard the airplane. The center-of-gravity location is vitally important to the airplane's stability. The airplane must be flown only when the center of gravity as determined by TO 1-1B-40 is within the limits prescribed in the applicable TO 1C-130-1 Flight Manual.

Source: https://assist.dla.mil -- Downloaded: 2016-12-11T01:38Z
Check the source to verify that this is the current version before use.

30.2.2.4 **Vehicle design.** Special considerations must be given to vehicles to insure air transportability on the C-130. These considerations are discussed in the following paragraphs.

30.2.2.4.1 **Floor load.** In addition to meeting various requirements, such as the compartment weight limits, other factors must be considered. These are discussed in the following paragraphs.

30.2.2.4.2 **Axle spacing.** If vehicle axles are less than 1.2 m (4 ft) apart, single axle limits will apply to the combined axles.

30.2.2.4.3 **Tire loads.** While it is permitted to load a vehicle with a tire inflation pressure of 100 psi, certain types of lug tires can place concentrated loads on the aircraft floor. These would require shoring for air transport or vehicle rolling movement. If a vehicle uses hard rubber wheels, the tire load must be within the allowable range shown in figure 59 for loading for flight. If any portion of a tire is not on the treadway, it is considered that the entire load is off the treadway. If the contact width of the tires exceeds 2.54 m (100 in.), use shoring to transmit the load onto the treadway area.

30.2.2.5 **Restraint.** Design all cargo and equipment to the following load factors:

Forward	3 G
Aft	1-1/2 G
Lateral	1-1/2 G
Up	2 G
Down	4-1/2 G

30.2.2.6 **Nuclear cargo.** Design this cargo to meet the load factors in 30.2.2.5 except that the upward load is increased to 3.7 G.

30.2.2.7 **Airdrop.** The C-130 is the primary tactical airdrop mission aircraft. While most of the design requirements for airdrop have been discussed in Appendix A, the equipment onboard and the operational limits of this aircraft must be considered. The aircraft is capable of airdrop in the following modes: door bundles, low altitude parachute extraction system (LAPES), container delivery system (CDS), low velocity platform and high altitude.

30.2.2.7.1 **Load limitations.** The maximum load that may be extracted over the cargo ramp during the airdrop is 15,875 kg (35,000 lb) for C-130EH airplanes AF62-1784 and up, and 11,340 kg (25,000 lb) for other C-130 airplanes. The maximum weight of a door bundle exiting from the paratroop door is 227 kg (500 lb). These weights include all equipment used to perform the drop, such as platforms.

Source: https://assist.dla.mil -- Downloaded: 2016-12-11T01:38Z
Check the source to verify that this is the current version before use.

30.2.2.7.2 Cargo dimensional limits. The item of equipment must meet all the dimensional limits, such as the safety aisle, in its fully rigged configuration. In addition, the load cannot exceed 2.74 m (108 in.) in width, and the height is limited by the tipoff as the load exits the aircraft. This height is shown in figure 60 and is measured from the bottom of the platform. The aft end of the load is the part that first exits the aircraft.

30.2.2.8 C-130 range. The range and mission profile varies because of temperature, winds, amount of cargo on board, etc. The following information is a guide to aircraft capability. For the longest leg over a water route, the cargo onboard is normally limited to 23,000 lb; however, under special conditions, this can be raised to 25,000 lb. For maximum cargo mission with short range, the C-130A and B have an approximate cargo capability of 35,000 lb and the C-130E/H has an approximate capability of 45,000 lb. Payload-range is shown in figure 61 and the curve represents the capability of the C-130E/H.

30.3 C-141B cargo design data. C-141A aircraft data are not contained since the Military Airlift Command does not operate any C-141A models.

30.3.1 Aircraft and equipment

30.3.1.1 C-141B description. The C-141B is a high-sweptback-wing jet aircraft with an intertheater mission. This design allows loading from the ground or at truckbed height through the aft fuselage. The cargo compartment can be equipped to accommodate general bulk and palletized cargo, vehicles, troops, paratroops, or cargo rigged for airdrop. The wide range of cargo which can be carried, coupled with many possible combinations of loads, provides great flexibility in moving troops and equipment. During personnel transportation, the aircraft can accommodate 200 ground troops, 133 ground troops over water, 155 paratroops in side-facing seats, 103 litters and 14 attendants or troops, or 106 troops in aft-facing seats. Seating maximums do not include seats required for aircrew members.

30.3.1.2 Cargo compartment. The cargo compartment is 28.4 m (93.33 ft) long by 3.12 m (10 ft, 3 in.) wide by 2.77 m (9 ft, 1 in.) high. The height and-width are reduced by 51 mm (2 in.) across the upper outside corners of the compartment at fuselage station (FUS STA) 1318 and FUS STA 1358 by the troop door tracks. When open, the troop doors extend into the cargo area and reduce the clearance height at the upper left and right corners by 0.51 m (20 in.). Additional cargo can be placed on the ramp which is 3.38 m (11 ft, 1 1/4 in.) long and 3.12 m (10 ft, 3 in.) wide. Further operational requirements restrict loading as follows:

a. A 152-mm (6-in.) clearance must be maintained from ceiling, doors, and side walls during loading and flight.

b. The C-141 is equipped with catwalks (walkways). This area is used as the safety aisle area and must be kept clear of all cargo.

c. The aircraft is equipped with a crew rest area that reduces part of the cargo compartment. While this item of equipment can be removed, the designer must assume it is in position. The crew rest facility extends from FUS STA 292 to FUS STA 378.

Source: https://assist.dla.mil -- Downloaded: 2016-12-11T01:38Z
Check the source to verify that this is the current version before use.

30.3.1.2.1 **Fuselage cross section.** Figure 62 provides the basic cross-sectional dimensions of the aircraft and allowable loading limits. If an oversized item is palletized on standard HCU-6/E pallets, the item can be a maximum of 102 in. from the top of the pallet. Other operational requirements may restrict the height to below 102 in. Other restrictions are as follows:

a. Palletized cargo under the crew rest is limited to 76 in. in height.

b. Single pallets using nets as restraint and stacked to 96 in. are not to exceed 10,000 lb.

c Single pallets using nets as restraint and stacked between 96 in. and 100 in. high are not to exceed 8000 lb.

For other equipment being loaded with the ramp down to the ground, the equipment can have a height of 2.62 m (103 in.) provided it meets the other loading interference requirements. The loading width is also 2.28 m (111 in.). After the cargo is on the aircraft, the usable area is 3.12 m (123 in.) wide by 2.62 m (103 in.) high. This can allow side by side placement of cargo, loaded one unit at a time. The usable length shown in figure 2 is 28.4 m (93.33 ft), less provisions for the crew rest area and the 152 mm (6 in.) clearance.

30.3.1.3 **Fuselage compartments.** The cargo compartment is divided into compartments as indicated in figure 64. The size of these compartments is designated by fuselage station (FUS STA) in inches. Figure 65 provides general cargo, palletized cargo, and pneumatic tire allowable loads for each compartment and figure 66 provides the allowable loads for hard rubber and steel wheels in relation to wheel width.

30.3.1.4 **Treadway.** The C-141 is designed with a high-strengh area for loading vehicles into the aircraft. The treadway location on the C-141 is 0.406 m (16 in.) on either side of the longitudinal centerline and is 0.864 m (34 in.) wide. The area ouside the treadway is rated at the same capacity for flight loads. This area differs only from the treadway during loading and unloading. The 0.813-m (32-in.) wide inside area is significantly weaker. The strength of the treadway varies from one compartment zone to another.

30.3.1.5 **Aft cargo door and ramp.** The aft end of the cargo compartment contains a pressure door and ramp which seal the compartment during pressurized flight. Two petal doors, in conjunction with the ramp and pressure door, can be operated for airdrops or on the ground to permit rapid straight-in loading of the compartment. The ramp is 3.39 m (133 1/4 in.) long and 3.12 m (123 in.) wide and is hinged to the aft end of the cargo compartment floor. From this position, it may rotate down to (1) a horizontal position for straight-in loading or an airdrop mission or (2) an inclined-down position where it serves as a ground loading ramp, making a maximum angle of approximately 0.262 rad (15°) with the ground. Ramp construction permits pressurization loads in flight and heavy cargo loading and offloading on the ground. The ramp in the horizontal position will support a 15,876-kg (35,000-lb), 7.32-m (24-ft) platform as it is loaded into the aircraft. Latches on the aft end of the ramp mate with lugs on auxiliary ground-loading ramps for ground loading, or with lugs on the pressure door when in flight. The height of the ramp from the ground can vary from 1.22 to 1.47 m (48 to 58 in.). Fifty-eight

Source: https://assist.dla.mil -- Downloaded: 2016-12-11T01:38Z
Check the source to verify that this is the current version before use.

inches should be used for design purposes. This height does not include the 38 mm (1 1/2 in.) height of the rollers if the rollers are turned up. The pressure door is hinged at the aft end and rotates up for loading. The pressure door is 2.77 m (109 in.) above the ramp when it is fully retracted. Aft of the ramp and pressure door are two petal doors. This area is unpressurized and is used to provide an aerodynamically clean afterbody. These doors are hinged to allow opening to 1.40 rad (80°) for ground loading and 1.12 rad (65°) during flight for airdrop. See figure 62 station dimensions.

30.3.1.5.1 Ramp hinge. Vehicle axles must not be centered on the ramp hinge (FS 1412) for flight. In addition, axles must be placed at least 8 in. forward of the ramp hinge. When individual axle weight exceeds 11,400 kg (25,000 lb) during loading, only one axle is allowed on the ramp at any time. Vehicles that have a snubbed, chained down, or fixed suspension and exceeds 14,472 kg (31,800 lb) must be loaded "straight in." The maximum practical vehicle gross weight for loading is 19,958 kg (44,000 lb).

30.3.1.5.2 Auxiliary loading ramps. Two auxiliary loading ramps 2.59 m (8-1/2 ft) long, 0.559 m (22 in.) wide, and weighing approximately 50 kg (110 lb) each are furnished with each aircraft (see figure 6). The ramps are used to bridge the gap between the end of the ramp and the ground during loading and offloading of vehicles or palletized cargo. The auxiliary ground-loading ramps will extend onto a truckbed for loading for a minimum distance of 76 mm (3 in.). When properly installed, the two ramps will support a 14,742 kg (32,500 lb) single-axle rolling load. The upper surfaces of the ramps are covered with nonskid material. Attached to the forward edge of each auxiliary loading ramp are two pairs of locks on 127-mm (5-in.) centers. These locks hook into latches which are on 254-mm (10-in.) centers on the aft edge of the integral ramp. It is only necessary to engage one lock on each pair, so the auxiliary ramps can be positioned in increments of 127 mm (5 in.) at any point across the integral ramp. The locks are engaged by holding the auxiliary ramp above the integral ramp with the front of the auxiliary ramp lowered. This permits latch locators on the locks to be inserted into the desired ramp latches. Lowering the auxiliary ramp positions the locks around the ramp latches to hold the auxiliary ramp secure. The auxiliary ramp must be raised approximately 610 mm (24 in.) above the level of the cargo ramp floor to engage or release the locks. Auxiliary ramps need not be centered in relation to the centerline of the aircraft. However, they should be aligned with the treadway of the integral ramp to keep vehicle loads on the integral ramp treadway whenever possible.

30.3.1.5.3 Cargo-loading stabilizer struts. Two retractable cargo-loading stabilizer struts are attached to the bottom of the fuselage just forward of the ramp at FUS STA 1388 (see figure 68). They support and help stabilize the aft end of the aircraft when extended during cargo loading or unloading. The upper end of each strut is mounted on a track by a sliding trunnion which permits the strut to be raised to a horizontal position and pushed back into a tunnel beneath the cargo floor when not in use. The struts are capable of accommodating simultaneous refueling and cargo loading. The struts are capable of a 0.305-m (12-in.) stroke and maximum loading capacity of 8165 kg (18,000 lb) each.

Source: https://assist.dla.mil -- Downloaded: 2016-12-11T01:38Z
Check the source to verify that this is the current version before use.

30.3.1.5.4 Auxiliary loading ramp extension. Auxiliary loading ramp extensions may be used if physical characteristics of the carrier or dolly are such that the rear end of the cargo will strike the ground or the aircraft when going up the auxiliary loading ramps. Properly designed auxiliary loading ramp extensions of any desired angle may be used. However, the use of these ramps is limited, as the ramps must be provided at both the load and offload points. In general, this approach should not be considered for military equipment requiring airlift for tactical reasons. It is acceptable for cargo such as a missile that is to be moved from fabrication facility to storage depot.

30.3.1.5.5 Steel bridge plate. A steel plate as shown in figure 69 may be used to bridge the gap between the aircraft ramp and truckbeds, flatbeds, and K-loaders during loading/offloading of wheeled vehicles or skidded or palletized cargo. The maximum capacity allowed is 3402 kg (7500 lb) per plate used.

30.3.1.6 Cargo compartment floor. This flush floor extends the full length of the compartment from FUS STA 292 to FUS STA 1412. A typical section of the floor is shown in figure 70. It is made of stiffened aluminum panels which interlock at the fore and aft joints to provide a continuous surface from the front of the compartment to the back. Recessed seat and roller conveyor channels and recessed cargo tiedown receptacles run the length of the panels. The seat tracks are capable of accommodating 4536 kg (10,000 lb) capacity removable tiedown fittings at 0.508-m (20-in.) increments and seat fittings at 25.4-mm (1-in.) increments. Individual receptacles for connecting 4536 kg (10,000 lb) capacity cargo tiedown fittings are located at butt line (BL) 0 and BL 40, left and right, on 0.508-m (20-in.) increments. The tiedown attach points in the seat tracks and the individual tiedown receptacles provide for a 0.508-m (20-in.) grid pattern of 4536 kg (10,000 lb) capacity tiedown fittings over the entire compartment floor. On the seat tracks, only those attach points identified by a yellow dot are to be used for tiedown loads. These points are on the 0.508 m (20 in.) grid pattern of tiedown receptacles. Using other tiedown locations may cause the track to fail. In addition, individual receptacles for connecting 11,340 kg (25,000 lb) capacity tiedown fittings are provided at BL 56, left and right, on 0.508-m (20-in.) spacings. The receptacle locations at FUS STA 326 and FUS STA 734 are exceptions to this incremental spacing. These receptacles are used as either restraint rail tiedowns or 11,340 kg (25,000 lb) capacity tiedown rings. At left and right BL 24 and BL 47, a continuous line of studs is recessed in the cargo floor to accommodate the troop seat supports. Four channels for the aluminum roller conveyors are recessed in the compartment floor on left and right BL 15 and BL 41 and from FUS STA 322 to FUS STA 1338. For vehicles and bulk loading, all roller conveyor sections are turned over so the rollers extend down into cutouts and the smooth bottom surfaces of the conveyors fit flush with the cargo floor. The overall locations of tiedown receptacles and rollers are shown in figure 71.

30.3.1.6.1 Cargo ramp floor. The cargo ramp floor cannot be loaded as heavily as the cargo compartment floor; however, the construction is similar except that seat tracks and floor studs are not provided.

Source: https://assist.dla.mil -- Downloaded: 2016-12-11T01:38Z
Check the source to verify that this is the current version before use.

30.3.1.6.2 Nonskid safety walk. Pieces of nonskid safety-walk material are cemented to the cargo compartment and ramp floor and on the side walkways at frequent intervals to provide secure footing for personnel.

30.3.1.7 Floor tiedown receptacles. A grid system is used to identify the 4536 kg (10,000 lb) capacity seat track and tiedown receptacles (see figure 71). There are seven rows of tiedown fitting receptacles across the cargo compartment floor and 56 rows of receptacles from the front of the compartment to the aft end of cargo compartment floor. The rows across the width are designated "A" through "G" beginning at the left side. The rows down the length are designated "1" through "56" beginning at the left side. The grid system thus formed identifies each fitting by letter and number. The correct letter and number combination is permanently etched into the floor adjacent to each fitting. A yellow dot is cemented in the center hole of each tiedown location in the continuous seat track to further identify the proper 0.51-m (20-in.) tiedown grid. The 11,4000 kg (25,000 lb) capacity tiedown receptacles are unmarked.

30.3.1.7.1 Ramp tiedown receptacles. A grid system of etched numbers and letters is used on the ramp floor to identify each of the 10,000 lb capacity tiedown receptacles. The rows are "1" through "5" from front to rear and "A" through "G" from left to right.

30.3.1.7.2 Fittings. The C-141 has two types of fittings with capacities of 4536 kg (10,000 lb) and 11,400 kg (25,000 lb). The fittings described in the following paragraphs can be positioned at numerous locations (figure 71) throughout the aircraft as shown in figure 72.

30.3.1.7.2.1 10,000 pound capacity tiedown fittings. A quantity of interchangeable quick-disconnect fittings for insertion in the 4536 kg (10,000 lb) capacity tiedown receptacles and in the seat track tiedown attach points are stowed in the cargo compartment. A spring-loaded pull ring on the fitting must be turned a quarter turn to insert the fitting in the receptacle. After insertion, rotate the spring a quarter turn, and then release the spring. In this position the tiedown ring will swivel to facilitate connection to the load. When the fitting is no longer needed, the pull ring is lifted and turned to release the fitting from the floor. The fitting has a 4536 kg (10,000 lb) capacity for cargo tiedown. All other uses, such as winching, limits its capacity to 6667 pounds.

30.3.1.7.2.2 25,000 pound capacity tiedown fittings. (See figure 72.) A quantity of interchangeable quick-disconnect fittings for insertion in the 11,400 kg (25,000 lb) capacity tiedown receptacles are stowed in the cargo compartment. A spring-loaded pull ring on the fitting must be pulled up to insert the fitting in the receptacle. After insertion, the fitting is shifted to the side of the receptacle hole opposite the release ring to trap the step of the fitting beneath the lip of the receptacle, and the release ring is released to fill the remainder of the hole and thus keep the step and lip engaged. In this position, the heavy tiedown ring will swivel to facilitate connection to the load. When the fitting is no longer needed, the release ring is pulled up and the fitting is shifted to disengage the step of the fitting from the lip of the receptacle. The fitting has a 11,400 kg (25,000 lb) capacity for cargo tiedown. All other uses limit its capacity to 7560 kg (16,667 lb).

Source: https://assist.dla.mil -- Downloaded: 2016-12-11T01:38Z
Check the source to verify that this is the current version before use.

30.3.1.8 **Tiedown devices.** The MB-1, MB-2 and CGU-1/B are devices used to secure cargo. Tiedown devices are described in detail in 30.1.6.4.3.

30.3.1.9 **Cargo handling system.** The C-141 is equipped with a cargo handling system that can be stored directly on the aircraft. The restraint rails can be rotated up and stored under the catwalks as shown in figure 70. Exceptions are rail sections located at the troop door, aft cargo compartment, forward ramp, and aft ramp which are separately stowed in and attached to the fuselage over the ramp area.

30.3.1.9.1 **Roller tracks.** The aircraft has four longitudinal roller tracks that can be placed with the rollers up or inverted to stow the rollers in the floor, as shown in figure 73. When the roller conveyors are inverted and the side restraint rails rotated to the stowed position, a perfectly smooth floor surface is provided. The lateral locations of the roller conveyors are shown in figure 5. The rollers have a diameter of 47.6 mm (1 7/8 in.) and are 3 3/4 in. wide. Since the rollers are seated in roller trays, they only project 1 1/2 in. above the aircraft floor. The rollers are on 10-in. centers fore and aft in the aircraft.

30.3.1.9.2 **Rails.** The rails are very similar to those on board the C-130 (see 30.2.1.10.1). The main difference is that these units can be stored through easy fold up or even removal. The rails have 27 restraint mechanisms (detents) on each side plus two on each side of the ramp. These detents are permanently installed at 1.01-m (40-in.) intervals with a total forward restraint capability of 11,340 kg (25,000 lb) per lock. The aft restraint on the right side of the aircraft can be varied to the desired amount of restraint to hold airdrop loads in place until the extraction force level is reached. When this force level is attained, the detent is disengaged and remains in this condition to allow load extraction. The detents on the right side of the ramp provide no aft restraint. The detents can be operated individually or in sequence and can be operated by remote control. Two restraint rail end bumpers are provided for attachment at FUS STA 328 to prevent overtravel of pallets or platforms.

30.3.1.9.3 **Cargo compartment vents.** Four vents are located in the side wall of the cargo compartment for connection to items of cargo carried in the aircraft which require an overboard exhaust (see figure 74.) Vents are located at FUS STA 368 (left and right) and FUS STA 1048 (left and right). The two vents on the left side of the compartment are for use in venting low temperature oxygen and nitrogen type equipment. The vents on the right side are for connection of exhausts from vehicles or other internal combustion engines which may be operating in the cargo compartment. The forward vent on the right side is used for connection of the comfort pallet vent. To gain access to both right and left aft vents, remove the liners at FUS STA 1048. Do not connect the exhaust from low temperature materials to the right side vents or the exhausts from operating engines to the left side vents. Connection of low temperature exhaust to a vent contaminated with oil or grease may cause an explosion. Each vent consists of a tube extending through the side wall of the cargo compartment with a coupling on its inboard end. In use, the coupling will secure an exhaust pipe to the vent tube. When not in use, the coupling will secure a plug over the vent tube to prevent air loss

Source: https://assist.dla.mil -- Downloaded: 2016-12-11T01:38Z
Check the source to verify that this is the current version before use.

during pressurized flight. The plug is connected to a chain at each vent for easy accessibility. A short nozzle which can be inserted through the two right vent tubes is stowed on each of the right side vents. These nozzles are used to direct the exhaust of the engines into the airstream away from the side of the fuselage. A rivet head on the flange of each right vent nozzle fits into a recess in the mating flange of the vent to ensure that the 0.785 rad (45°) angle faces aft.

30.3.1.10 Electrical service receptacles. (See figure 75.) There are eleven 115/200-VAC, 20 amp, three-phase electrical receptacles in the cargo compartment: one on each side near fuselage stations 1278 and 1118, one on the left side near fuselage station 958, one on the right side near fuselage station 858 one on the left side near fuselage station 698, one on each side near fuselage station 498, and one on the right side near fuselage station 361 (for comfort pallet installation). Two aeromedical electrical receptacles are located at right fuselage stations 818 and 1270. There are two 28-VDC electrical receptacles in the cargo compartment: one on the right side near fuselage station 328 and one on the right side near fuselage station 498. The 115/200-VAC receptacles provide 20 amperes per phase, and the 28-VDC receptacles provide 70 amperes.

30.3.2 Cargo requirements

30.3.2.1 Loading. Loading and problems that can be encountered are described in 30.2.2. Although the determinations are for the C-130, the same problems are encountered on the C-141. Loading limit charts for the C-141 aircraft are provided in figures 76 through 79. While many of the charts show the limits over the ramps, straight-in loading can accommodate 2.62 m (103 in.) high units without any problems. However, the capability to load/unload vehicles from the straight-in loading configuration (ramp horizontal) can be very limited. At some locations, K-loaders or similar equipment may not be available to remove the item from a level load position. The designer should assume a drive-up ramp loading capability for both wheeled and tracked vehicles.

30.3.2.1.1 Vehicle end height loading clearance. Figure 79 shows the maximum vehicle height loadable with various amounts of vehicle overhang and compartment floor heights. If the point of maximum height is behind the first wheel, then a full 2.62 m (103 in.) height can be loaded.

30.3.2.1.2 Weight and balance. The maximum weight that can be carried on any specific mission is limited by the maximum allowable gross weight which includes the empty weight of the aircraft, the number of crewman, and the amount of fuel and oil aboard the aircraft. The maximum allowable cabin load during normal operations is about 31,706 kg (69,900 lb). During a contingency or wartime, the maximum allowable cabin load is about 41,000 kg (90,200 lb). Range is limited at the above weights. The CG location is vitally important to the stability of the aircraft. The aircraft must be flown only when the CG, as determined by TO-1-1B-40, is within the limits prescribed in TO-1C-141A-1.

Source: https://assist.dla.mil -- Downloaded: 2016-12-11T01:38Z
Check the source to verify that this is the current version before use.

30.3.2.1.2.1 Center of gravity. The CG is the point around which the aircraft will balance. The flight performance of the aircraft depends on the location of this point. If the CG is too far out of position, the aircraft will be unable to fly. As fuel, oil, cargo, and other weights are added, removed, or relocated within the aircraft, the CG of the aircraft changes. The aircraft is designed to permit such CG changes, provided the CG location remains within certain specified limits. Instructions for calculating the CG of individual items of cargo are contained in 30.1.2.10. Refer to TO-1-1B-40 and TO-1C-141A-5 for aircraft CG calculations.

30.3.2.1.2.2 Loading envelope. Figure 80 provides a typical cargo loading envelope considering the most critical flight conditions. The cargo loading envelope can become an important factor in designing a large item such as a missile or loading a series of equipment items on an aircraft.

30.3.2.2 Vehicle design. Special considerations must be given to ensure air transportability on the C-141. In addition to the floor load restrictions provided in 30.3.1.3.2, consider the following limitations in the design of any equipment:

a. Vehicle axles cannot be positioned with 0.2 m (8 in.) of FUS STA 422, and FUS STA 1423, and 02 m (8 in.) forward of FUS STA 1292.

b. Equipment should not be designed to roll or be stowed over the roller channels in the stowed position. If the vehicles must be stowed over these positions, then parking shoring will be required.

c. No wheels may be parked outboard of the treadways between FUS STA 1320 and FUS STA 1356. This also applies to highly concentrated loads. This restriction is necessary because the toop door at this location has part of the standard floor support removed.

d. Allowable tire inflation pressure is limited to 100 psi. If a vehicle requires a tire that exceeds 100 psi, it is considered that the tire is rated as a hard rubber wheel. (See figure 66 for allowable rubber wheel and steel wheel loads.)

e. If any portion of a tire is not on the treadway, it is considered that the entire tire is off the treadway.

f. Tracked vehicles should have rubber pads that protrude beyond the steel track, so that no portion of the metal track contacts the cargo floor. If the metal track makes any contact, protective shoring must be used. Compute the pressure area to determine if the vehicle can be placed on the aircraft without parking shoring. When determining the contact area for a tracked vehicle, use only that area of the tracks or lugs which lies under the supporting wheels of the vehicle.

Source: https://assist.dla.mil -- Downloaded: 2016-12-11T01:38Z
Check the source to verify that this is the current version before use.

g. Tracked vehicles may require parking shoring depending upon the track condition and axle weights. The following requirements exist.

(1) Maximum axle weight between 2268 kg (5000 lb) and 2494 kg (5500 lb) requires a minimum 1 in. shoring.

(2) Maximum axle weight between 2494 kg (5500 lb) requires a minimum 1.5 in. shoring.

(3) Maximum axle weight between 2989 kg (96,500 lb) and 3583 kg (7900 lb) requires a minimum 2 in. shoring.

(4) Maximum axle weight between 3583 kg (7900 lb) and 4536 kg (10,000 lb) requires a minimum 3 in. shoring.

h. Vehicles having unusual suspensions may require special analysis and loading/shipping procedures.

30.3.2.3 General cargo. The prime aircraft consideration in the design and placement of general cargo is the pounds per square inch weight distribution to prevent puncture of the cargo floor surface.

30.3.2.3.1 Restraint criteria. Design all cargo and equipment to the following load factors:

Forward	3G
Aft	1-1/2G
Lateral	1-1/2G
Up	2G
Down	4-1/2G

30.3.2.3.2 Nuclear cargo. Design nuclear cargo to meet the load factors in 30.3.2.3.1 except that the upward load is increased to 3.7 G.

30.3.2.4 Airdrop. The C-141 is capable of strategic airdrop missions. Airdrop design requirements are discussed in 4.4. In addition, the type of airdrop, load limitations, and dimensional limits must be considered for the C-141.

30.3.2.4.1 Types of airdrop. The aircraft is capable of airdrop in the following modes: door bundles, container delivery system, low velocity airdrop, and high altitude. LAPES is not operationally practical from the C-141. In the airdrop configuration the petal door to the bottom of the landing gear wheels is 0.46 m (18 in.).

30.3.2.4.2 Dimensional limits. The load should not exceed 2.74 m (108 in.) in width, and a height limited by the tipoff as the load leaves the aircraft. The tipoff curve is shown in figure 81. This height is from the bottom of the platform. The forward end of the load is that part which first exits the aircraft. However, the lateral projected area of the rigged platform is not to exceed 259.08 m^2 (10,200 $in.^2$).

Source: https://assist.dla.mil -- Downloaded: 2016-12-11T01:38Z
Check the source to verify that this is the current version before use.

30.3.2.4.3 **Load limitations.** The maximum load that may be extracted over the cargo ramp during airdrop is 15,876 kg (35,000 lb) on a 7.32 m (24 ft) platform with auxiliary equipment available with the aircraft. For loads 15,876 kg (25,000 lb) and under, no special kits are required. Further weight and CG limits are dependent on pallet/load size as illustrated in figure 82 and roller load allowables. Verification by test over instrumented rollers is required to ensure that aircraft structural limits are not exceeded. The maximum weight of a door bundle exiting from the aircraft is 227 kg (500 lb).

30.3.2.5 **Range.** The range and mission profile varies because of temperature, winds, amount of cargo onboard, etc. Figure 83 provides some data concerning the tradeoff involved and is not meant to provide the absolute answer.

30.4 C-5 cargo design data

30.4.1 Aircraft and equipment

30.4.1.1 **General.** The C-5 airplane is a high speed, high capacity, long range airplane for transportation of cargo and troops. Special features of this airplane are its front and aft end loading capability provided by hinged visor door, aft cargo door, and forward and aft ramps. The floor is designed for full width load bearing. The airplane has the ability to kneel to various loading heights for both fore and aft ramps. Cargo can be loaded from loaders, trucks, or driven on/off. The aircraft has an upper deck for flight crew and an upper rear compartment containing 73 passenger seats for troops. An aerial delivery kit is available to convert the aircraft to perform airdrops through the aft door.

30.4.1.2 **Cargo compartment.** Figure 84 shows detail views and dimensions of the cargo compartment. The cargo compartment, including the forward and aft cargo ramps, extends from fuselage station (FUS STA) 395 to 2131. The compartment, excluding the forward and aft cargo ramps, is a constant cross-sectional shape extending from FUS STA 511 to 1976. In the forward and aft ramp areas, FUS STA 395 to 511 and 1976 to 2131, respectively, the compartment height is reduced by the upward inclination of the ramps when they are closed. Some dimensions may be critical for loading. For instance, there are reductions in the aft cargo loading opening depending on the kneeled position of the airplane. For example, when the pressure door, the cargo ramp, and the cargo doors are positioned for truck loading, the height of the cargo compartment opening is reduced to 2.89 m (114 in.). Further operational requirements restrict loading space as follows:

a. A 6-in. clearance must be maintained from ceiling and side walls.

b. The outboard walkway must be kept clear of cargo.

c. When cargo is placed on both logistics rail systems the 0.36-m (14-in.) center walkway must be kept clear of cargo.

Source: https://assist.dla.mil -- Downloaded: 2016-12-11T01:38Z
Check the source to verify that this is the current version before use.

30.4.1.2.1 Cargo compartments and facilities. The cargo compartment is divided into compartments as shown in figure 84. The compartment designation is for location performance and to indicate strength loads. The cargo compartment floor consists of a series of flush fitting, interlocking, stiffening aluminum panels that extend from FUS STA 511 to 1976. The usable floor is 36.9 m (121 ft 2 in.) long and 5.79 m (19 ft) wide and is a full-width load-bearing structure, extending from FUS STA 517 to 1971. Recessed cover, for the support and stowage of the roller conveyors and the inboard logistics rails, runs the entire length of the floor. Individual 11,400 kg (25,000 lb) capacity tiedowns are recessed into the floor panels at a regular spacing of 1.01 m (40 in.) between FUS STA 664 and 1064, and between FUS STA 1724 and 1964. The tiedowns between FUS STA 1064 and 1724 follow an irregular pattern of between 0.96 m and 1.27 m (30 in. and 50 in.). The tiedowns between FUS STA 524 and 604 also follow an irregular pattern of 1.370 m to 0.86 m (54 in. to 34 in.). A continuous line of ball studs is recessed into the cargo floor for installation of the aerial delivery system rails. The ball studs are located at left and right butt lines 55.9 and follow the same spacing as the cargo tiedowns. The floor between FUS STA 511 and 724 and between 1884 and 1971, is capable of supporting loads of (20,000 lb) in any (40 in.) longitudinal length of floor. The remainder of the floor between FUS STA 724 and 1884 is capable of supporting 16,329 kg (36,000 lb) in any 1.01 m (40 in.) longitudinal length of the floor, except for the applicable restrictions discussed within this appendix.

30.4.1.2.2 Treadway. The C-5 does not have a specific treadway; the entire floor of the aircraft has a uniform strength cross-section.

30.4.1.2.3 Cargo doors. The C-5 has a unique ability to vary its loading height called kneeling. Kneeling can change loading angles and door opening heights. Figure 85 provides the basic dimensions under the different factors, for the aft doors, and figure 86 for the forward door. Remember to leave a 6-in. clearance.

30.4.1.3 Kneeling. The kneeling capability varies the ramp angles for loading and deck height. Figure 87 provides the various deck heights and angles.

30.4.1.3.1 Forward kneel--on/off loading position. The forward kneel position enables cargo loading through the forward and aft ends of the airplane, using the truck or drive-in loading position. For on/off loading using the forward-kneel truck-loading position, open the visor, the pressure door, and the aft cargo doors, then place the forward ramp and extension, and/or the aft ramp in the truck-loading position. In this position, the forward ramp extension is supported by its support jacks and the forward ramp by its actuators, and the loading height of the extension can be varied by adjustment from a minimum of 0.91 m (36 in.) to a maximum of 1.35 m (53 in.). At the minimum height, the forward ramp and extension floors are at an angle of 0.078 rad (4.5°) to the cargo compartment floor. In the truck loading position, the aft ramp is supported by its actuators and the loading height of the ramp is 2.36 m (93 in.) maximum. For on/off loading using the forward kneel drive-in loading position, open the visor and/or the aft cargo doors, then place the forward ramp and extension and/or the aft ramp and pressure door in the drive-

Source: https://assist.dla.mil -- Downloaded: 2016-12-11T01:38Z
Check the source to verify that this is the current version before use.

in loading position. In this position, the forward ramp extension rests on the ground and is supported by its support jack pads. The forward ramp is supported by its ground support pads. The forward ramp floor is at an angle of 0.174 rad (10°) to the cargo compartment floor and the ramp extension floor is at an angle of 0.017 rad (1.0°) (crest) to the ramp floor. In the drive-in position, the aft ramp is supported by its actuators and the pressure door (used as the aft ramp extension) toes rest on the ground supporting the door. In this position, the aft ramp floor is at an angle of 0.236 rad (13.5°) to the cargo compartment floor and the pressure door is at an angle of 0.122 rad (7.7°) (crest) to the ramp floor. The cargo compartment floor height from ground level in the forward kneel position is 1.45 m (57 in.) at FUS STA 517 and 2.29 m (90 in.) at FUS STA 1976, with the cargo compartment floor sloping down towards the forward end of the airplane at an angle of 0.0227 rad (1.3°).

30.4.1.3.2 Level kneel--on/off loading position. The level-kneel position enables cargo loading through the forward and aft ends of the airplane using the truck or drive-in loading positions. For on/off loading using the truck-loading position, open the visor, the pressure door, and the aft cargo doors, then place the forward ramp and extension, and/or the aft ramp in the truck-loading position. In this position, the forward ramp extension is supported by its support jacks and the forward ramp by its actuators, and the loading height of the ramp extension is 1.78 m (70 in.). In this position, the aft ramp is supported by it actuators and the loading height of the ramp is 2.03 m (80 in.). For on/off loading using the level-kneel drive-in loading position, the visor and/or the aft cargo doors are opened then the forward ramp and extension and/or the aft ramp and the pressure door are placed in the drive-in loading position. In the drive-in loading position, the forward ramp extension toes rest on the ground and the extension is supported by its actuators. In this position, the forward ramp floor is at an angle of 0.236 rad (13.5°) to the cargo compartment floor and the forward ramp extension floor is at an angle of 0.035 rad (1.9°) to the ramp floor. The aft ramp is supported by its actuators and the pressure door toes rest on the ground supporting the door. In this position, the aft ramp floor is at an angle of 0.236 rad (13.5°) to the cargo compartment floor and the pressure door is at an angle of 0.014 rad (0.8°) (crest) to the ramp floor. The cargo compartment floor height from the ground in the level kneel position is 1.80 m (71.0 in.) at FUS STA 517 and 2.01 m (79 in.) at FUS STA 1976, with the cargo compartment floor sloping down towards the forward end of the airplane at an angle of 0.0052 rad (0.3°).

30.4.1.3.3 Aft kneel--on/off loading position. With the airplane in the aft kneel-loading position, cargo can only be on/off loaded through the aft end of the airplane using the truck or drive-in loading positions. For on/off loading in this position, the aft cargo doors and the pressure door are opened and the aft cargo ramp is placed in the truck-loading position. In this position, the loading height of the aft ramp floor can be adjusted from a minimum of 0.914 m (36 in.) to a miximum of 1.45 m (57 in.). For on/off loading using the aft kneel drive-in loading position, open the aft cargo doors then place the aft ramp and pressure door in the drive-in loading position. In this position, the aft ramp is supported by its support pads and the pressure door toes (used as the ramp extension) rest on the ground supporting the door. In this position, the aft ramp floor is at an angle of 0.138 rad (7.9°) (crest)

Source: https://assist.dla.mil -- Downloaded: 2016-12-11T01:38Z
Check the source to verify that this is the current version before use.

to the compartment floor and the pressure door is at an angle of 0.014 rad (0.8°) (crest) to the ramp floor. The compartment floor height from the ground in the aft kneel position is 2.92 m (115 in.) at FUS STA 517 and 1.58 m (62 in.) at FUS STA 1976 with the floor sloping down towards the aft end of the airplane at an angle of 0.037 rad (2.1°).

30.4.1.4 Tiedown rings. A total of 304 tiedown rings are provided in the cargo compartment floor and on the forward and aft ramp, as shown in figure 88. Each tiedown ring is mounted in a pan recessed in the cargo floor. The tiedowns are capable of withstanding a 11,340 kg (25,000 lb) ultimate load within the hemisphere above the cargo floor. Figure 88 also shows the two types of tiedown rings.

30.4.1.5 Tiedown devices. The following tiedown devices are used on the C-5: MB-1, MB-2, and CGU-1/B. See figures 20 and 21 and 30.1.6.4.3 for details on tiedown devices.

30.4.1.6 Roller conveyor systems. The C-5 is equipped with a dual set of logistics roller conveyor systems capable of securing 463L pallet loads. Figure 89 shows this rail system. While similar in operation to systems used in the C-130 and the C-141, it has features that are significantly different. The rail has a capacity of 13,608 kg (30,000 lb) of forward restraint for the 463L pallet position, which is equivalent to 6804 kg (15,000 lb) forward restraint per detent. The other restraint factors are the same as for the C-130 and the C-141. The rails and rollers can be stowed in the aircraft floor, providing a flat floor. The two in-board rails could be stowed allowing centerline loading of a platform up to 5.84 m (230 in.) wide. This allows a great deal of flexibility. For example, an extra wide or heavy load can be rolled into the aircraft down the center, utilizing four or all eight roller conveyors across the entire floor. If the load does not move within a rail system, direct tiedown to the floor is used to secure the load. The airplane is also equipped with an aerial delivery system (ADS). This entails a kit of a rail system that can be mounted on the aircraft floor for loading aerial delivery loads and pallets down the aircraft centerline. The ADS system is shown in figure 90. However, the designer should not rely on the availability of this kit for logistics movement. The ADS system is used for all airdrop loads.

30.4.1.7 Cargo compartment electrical outlets and power supply. (See figure 91.) Seven 28-volt DC service receptacles and fourteen 115/200-volt AC, 400 Hz, 3-phase service receptacles are provided in the cargo compartment for operation of equipment that may be needed in the airplane. The Monitor 2 bus provides AC, 70-ampere power to the forward cargo winch compartment outlet and two forward buffet/lav unit outlets on the right side of the cargo compartment. In addition, this bus provides AC, 35-ampere power to four service outlets on the left side of the cargo compartment. The Monitor 3 bus provides AC, 70-ampere power to two aft buffet/lav unit outlets on the right side of the cargo compartment. In addition, this bus provides AC, 50-ampere power to the aft winch compartment and four service outlets on the right side of the cargo compartment. The main DC bus No. 1 provides DC, 35-ampere power to four service outlets on the left side of the cargo compartment. The main DC bus No. 2 provides DC, 35-ampere power to three service outlets on the right side of the cargo compartment.

Source: https://assist.dla.mil -- Downloaded: 2016-12-11T01:38Z
Check the source to verify that this is the current version before use.

30.4.1.8 Cargo compartment vents. (See figure 92.) Seven overboard vents are provided in the cargo compartment for overboard venting of fumes and vapors. Ten vents are for connection to comfort pallets (when installed) or to items of cargo carried in the airplane requiring cryogenic venting or to exhaust of vehicles or internal combustion engines that may be operating in the cargo compartment. The cryogenic vents are on the left side of the cargo compartment at FUS STA 734, 1219, and 1779, all at WL 200. The exhaust vents are on the right side of the cargo compartment at FUS STA 594, 734, 1219, and 1779 all at WL 200. Each vent consists of a tube extending through the sidewall of the cargo compartment, a sealing plug, and a coupling. In use, the sealing plug is removed from the vent tube and the coupling is used to secure an exhaust pipe to the vent tube. When not in use, the coupling secures the sealing plug inside the vent tube to prevent loss of air during pressurized flight. The sealing plug is attached to a chain at each vent for easy accesibility. A short nozzle, which can be inserted through the right side vent tube is stowed at each of the right side vents. When installed, the nozzles direct the exhaust of engines into the airstream away from the side of the fuselage.

30.4.2 Loading

30.4.2.1 General. The size of the C-5 affords the opportunity to load large cargo items necessary to meet military objectives. It also provides the ability to move large items that would be restricted in surface movement. Due to the various loading positions, the data required to determine loading is extensive. Attempt to design the equipment to allow loading under various conditions; for example, placing a vehicle on board from either front or rear doors of the aircraft.

30.4.2.2 Roller loads. The allowable roller loads are provided in table IV. Note that the roller limits exceed the structural capability of some current pallets and platforms: take care not to overload the pallets or platforms. The loads in column one can be used if the loads are confirmed by instrumented tests. Tests can be accomplished by instrumenting one set of lateral rollers and recording the loads as the pallet/platform is moved over at an interval for each type of roller system.

TABLE IV. Allowable roller loads.

	MAXIMUM ROLLER CONVEYOR SYSTEM CAPACITY (FLIGHT)							
	COLUMN 1 MAXIMUM ROLLER LOAD		COLUMN 2 MAXIMUM LOAD 2 TO 4 LATERAL ROLLERS		COLUMN 3 TOTAL LOAD 1 OR 2 CONVEYORS		COLUMN 4 TOTAL LOAD 3 OR 4 CONVEYORS	
	(lb)	(kg)	(lb)	(kg)	(lb/lin ft)	(kg)	(lb/lin ft)	(kg)
LOGISTIC SYSTEM	1000	454	2000	907	1125	510	2250	1021
ADS	3000	1361	6000	2722	1800	817	3600	1633

1. When pallet/platform roller loads are known (loads previously determined by instrumented tests) only column 1 will apply.

2. Overall cargo limits as shown in Figure 11 must not be exceeded.

Source: https://assist.dla.mil -- Downloaded: 2016-12-11T01:38Z
Check the source to verify that this is the current version before use.

30.4.2.3 **Compartment loads.** Compartment load limits are provided in figure 93.

30.4.2.3.1 **Axle loads.** Axle loads and spacing requirements between axles are given in figure 94.

30.4.2.3.2 **Loading limits.** The aircraft can be loaded with the ramp in a variety of positions. Figure 95 provides the limits for each of these positions for the forward ramp and figure 96, the aft ramp.

30.4.2.3.3 **Lateral loading limits.** Due to the large width of the aircraft, it is important that heavy loads be placed about the centerline of the aircraft. The allowable lateral shift of the CG, from the center of the aircraft is provided in figure 97. Butt line zero is the aircraft longitudinal center line. An item may require loading on the center of the ramp but can be placed to one side after loading on the aircraft.

30.4.2.3.4 **Concentrated floor loads.** Figure 98 provides the allowable concentrated load. Where a load exceeds the allowable limit, use shoring to achieve this limit. This category of cargo includes boxes, crates, skidded loads, and any other cargo which makes direct contact with the aircraft floor.

30.4.2.3.5 **Tire limitations.** Figure 99 provides the floor load limits for steel or hard rubber tires. A pneumatic tire with a load up to 2258 kg (5000 lb) can be placed anywhere on the cargo floor, except over tiedown ring pans or restricted areas as shown in figure 100. Shoring may be required for these wheel loads to be placed on the aircraft. Determine the shoring required from figures 100 and 101 by finding the allowable width and length for a particular load. This width and length should be as close as possible to the actual tire size, less dimension of tiedown ring pan. The required shoring pad size is one-half of the larger difference of the length or width. Use standard shoring rules to determine thickness; however, minimum thickness of 1/2 in. is required even if the tire is less than required length and width.

30.4.2.4 **Tracked vehicles.** The procedures used to determine if tank treads can be placed on the aircraft are provided in figures 101 and 102. These are similar to those used for pneumatic tires. If track pads are not covered with rubber, or wear of the rubber pads results in possible contact of the steel grousers with the aircraft floor, wood shoring is required.

30.4.2.5 **Steel bridge plates.** Bridge plates are used for truckbed, flatbed, or loading-dock loading and off-loading. (For construction, see 30.3.1.5.5, figure 69.) Locally manufactured steel bridge plates are used to bridge the gap between flatbeds/K-loaders and the airplane forward ramp extension or the aft ramp during loading or off-loading of wheeled cargo. The steel bridge plates allow the cargo to make a smooth transition from the loading vehicle to the airplane and vice versa. Each plate is designed to support a maximum weight of 3402 kg (7500 lb).

Source: https://assist.dla.mil -- Downloaded: 2016-12-11T01:38Z
Check the source to verify that this is the current version before use.

30.4.2.6 Portable loading ramp extension. (See figure 103.) A portable loading ramp extension is provided to assist with the on/off loading of oversize vehicular loads. It is used as an extension of the forward ramp extension on the airplane. With the airplane in the forward kneeled position and the forward ramp and extension in the truck loading position [with the forward end of the ramp extension at a loading height of 50.5 in. (±1/2 in.)], the ramp extension provides a shallow on/off loading angle for the cargo as it is driven into or out of the airplane. The portable loading ramp extension can be disassembled for air transport as part of the cargo load.

30.4.2.7 Center of gravity. In view of the size of the aircraft, the CG of an individual item of equipment usually does not affect the aircraft mission. However, combination of cargo must be within the CG limits as shown in figure 104. Use this figure for planning purposes only. Make final checks in accordance with TO 1-1B-40.

30.4.3 Cargo design requirements

30.4.3.1 Cargo design considerations. This section presents cargo design considerations not covered elsewhere in this chapter.

30.4.3.2 Cargo loading. The loading of cargo on this aircraft varies due to the kneeled position and door (forward or aft) used. The following paragraphs provide limits for cargo loading:

a. Figure 105 presents loading limits and clearance data for palletized crated cargo loaded from both the forward and aft cargo doors of the C-5 in various kneeled positions.

b. Figure 106 presents vehicle projection limits for loading the C-5 from both the forward and aft cargo doors in various kneeled positions.

c. Figure 107 presents vehicle overhang limits for loading from the forward or aft cargo doors in various kneeled positions.

d. Figure 108 presents vehicle crest limits for loading from the forward or aft cargo doors with the C-5 in various kneeled positions.

e. Figure 109 presents parking and overhang limits for forward and aft ramp closed positions.

30.4.3.3 Floor loading. Floor loads cannot exceed those indicated in 30.4.2. In addition, side by side or multiple wheeled vehicle axles loaded between FUS STA 1458 and FUS STA 1518 are limited to a combined maximum weight of 11,400 kg (25,000 lb).

30.4.3.4 Restraint criteria. Design all cargo to the following load factors: (1) forward, 3 G; (2) aft, 1 1/2 G; (3) lateral, 1 1/2 G; (4) up, 2 G; and (5) down, 4 1/2 G.

Source: https://assist.dla.mil -- Downloaded: 2016-12-11T01:38Z
Check the source to verify that this is the current version before use.

30.4.3.5 Rail system. The aircraft rail system provides 13,608 kg (30,000 lb) of restraint on 80-inch centers. This corresponds to 3 G restraints for a 4536 kg (10,000 lb) capacity 463L pallet. Where equipment requires restraint at a higher load factor than rail system capacity, the load can be reduced or tied down to the floor to achieve higher restraint. Floor tiedown can only be accomplished in the fore and aft direction, with the logistic rail system in use.

30.4.3.6 Tiedowns. Tiedowns developed for use on the C-130 and C-141 may not be acceptable for use on the C-5. The C-130 and the C-141 have tiedowns on 0.51-m (20-in.) centers with most having a 4536-kg (10,000-lb) capacity. The C-5 is on 1.02-m (40-in.) centers with a 11,400-kg (25,000-lb) capacity. Any item that can be carried on the C-130 and the C-141 can be moved on the C-5 but may require a different tiedown pattern.

30.4.3.7 Range. The C-5 is capable of in-flight refueling to provide extended range. The payload-distance curve, figure 110, shows typical range performance. The mission profile is determined on payload. For a mission with 59,790 kg (220,000 lb) of cargo the airplane can fly approximately 2750 nautical miles, while at 45,359 kg (100,000 lb) the range is approximately 5500 nautical miles.

30.5 Civil Reserve Air Fleet

30.5.1 General. The Civil Reserve Air Fleet (CRAF) consists of a number of aircraft models operated by US commercial carriers. These commercial concerns have committed their resources by contract to provide aircraft, support equipment, operations, and support personnel to the Military Airlift Command (MAC). The CRAF represents approximately one half of the MAC total strategic wartime airlift capability.

CRAF aircraft, in contrast to the MAC-owned and operated prime mission cargo aircraft, are not standardized. Variations exist, even among the same type, model, and series of aircraft due to loading door options and placement of facilities, compartment stations, and furnishings suited to the needs of the individual carrier. The design data in this section reflects the basic dimensional constraints for loading CRAF aircraft, that is, the maximum cargo package size that can be loaded through the doors and into the cargo compartment of various commercial aircraft models. This guidance should not be used for purposes of load planning the aircraft. Actual load planning is subject to the approval of the commercial carrier.

30.5.1.1 Responsibilities. The carrier is responsible for the safe loading of the aircraft in accordance with Federal Aviation Regulations (FARs) and individual aircraft loading specifications. The carrier representative will provide the MAC traffic representative a form showing specific aircraft capability to include Allowable Cabin Load (ACL) by compartment for the planned trip to assure a weight and balance CG within aircraft limitations. The aircraft commander (or designated crewmember) is responsible for visually checking the cargo load, its security, and tiedown so that FAA requirements are met.

Source: https://assist.dla.mil -- Downloaded: 2016-12-11T01:38Z
Check the source to verify that this is the current version before use.

The government will load the aircraft according to the planned load breakdown requirements provided by the carrier and is responsible for the accuracy of the actual on-load weights provided to the carrier and entered on the local station load summary form.

30.5.1.2 Cargo compartments (general). CRAF cargo compartments provide a cargo floor space normally referred to as pallet positions, based on the size of the HCU-6/E (463L standard military) cargo pallet. The height dimension for pallets varies with each aircraft configuration. In all cases, a clearance of 51 mm (2 in.) from the ceiling and sidewalls is maintained.

The non-structural nature of commercial aircraft floor surfaces requires cargo to be palletized or loaded upon a palletized or wood-shored subfloor. Normally, the HCU-6/E pallet is used in military airlift operations. Palletized cargo should be designed such that it can be restrained directly to the pallet rings when a standard 463L pallet net assembly cannot be used. Wheeled cargo can be loaded directly aboard the aircraft when a subfloor is installed. Shoring, when used as a subfloor, consists of wood at least 51 mm (2 in.) thick.

The following sections provide generalized cargo loading capabilities of the CRAF carriers. Variations within series and models exist and are noted when possible.

30.5.2 Boeing 747. The Boeing 747 aircraft is contracted to carry 180,000 lbs of cargo, or from 364 to 482 passengers with baggage. The B747-100B/200B and the shorter B747SP are primarily passenger craft. B747-100F and -200F are freighter models. The B747-200C is a convertible capable of being configured for either all-passenger or all-cargo missions.

This section addresses designing for air transportability aboard B747-100F/ -200F/ and -200C. Charts included provide dimensional limitations of cargo designed for loading individual items of cargo aboard these aircraft. Load planning is subject to the approval of the individual carrier at the time of aircraft loading.

The B747 has two levels designed to accept cargo loading; the main deck and the lower lobe compartments. Figure 111 illustrates the available cargo compartments and loading door locations. The following paragraphs detail the cargo capabilites of these levels.

30.5.2.1 Main deck. The B747 main deck can be configured in a 33 or 37 pallet configuration. The 33 pallet configuration affords more access to vertical restraint locks, allowing pallet weights up to 4696 kg (10,354 lb) 4536 kg (10,000 lb) of cargo plus pallet and nets). Allowable pallet weights are restricted to lesser values at various pallet positions within the cabin. Figure 112 shows the 33 pallet configuration and the allowable pallet loads.

Source: https://assist.dla.mil -- Downloaded: 2016-12-11T01:38Z
Check the source to verify that this is the current version before use.

Various models are configured with either a nose (visor) door or a side cargo door as standard equipment for main deck loading. Optional doors are available on the B747 and many may have both types, depending on the carrier's needs. Table V indicates the availability of main deck doors on the B747.

TABLE V. Nose/side doors.

AIRCRAFT SERIES	NOSE (VISOR) DOOR	SIDE CARGO DOOR
B747-100F	NA	STANDARD
B747-200C	STANDARD	OPTIONAL
B747-200F	STANDARD	OPTIONAL 1

1 THE B747-200F NORMALLY WILL HAVE THE SIDE CARGO DOOR OPTION.

30.5.2.1.1 B747 nose (visor) door. The nose door entrance dimensions are nominally 2.64 m (104 in.) wide by 2.49 m (98 in.) high. A two-inch height margin for clearance and the use of a pallet subfloor reduce the maximum allowable cargo height to 2.39 (94 in.). Figure 113 depicts the cross section of the nose door in more detail. A minimum of 57 mm (2 in.) of clearance must be maintained between the cargo and the aircraft on all sides.

30.5.2.1.2 B747 side door. The side cargo door (when available) is located aft of the wing on the left side of the aircraft. It provides an opening nominally 3.90 m (134 in.) wide by 3.16 m (123 in.) high. A portion of the upper corner areas [1.52 mm (6 in.) by 7.6 mm (3 in.)] is obstructed by the door hinges.

The maximum allowable cargo height above the pallet surface is 3.02 m (118 3/4 in.). This dimension allows for the rollers, pallet, and 51 mm (2 in.) of top clearance. Pallets to be carried forward of FUS STA 903 are further restricted to 2.39 m (94 in.) above the pallet due to the overhead crew/passenger compartment. Longer cargo items loaded through the side door must be rotated in the doorway area prior to being moved to a forward/aft flight position. Therefore, maximum length, width, and height are interrelated. Use the maximum package chart (figure 115) for general planning purposes.

NOTE: The Boeing Aircraft Co. has modified a number of passenger aircraft (B747 Mod C) to convertible air freighters for some carriers. For planning purposes, the maximum cargo height is the same as the nose door limitations: 2.39 m (94 in.).

Source: https://assist.dla.mil -- Downloaded: 2016-12-11T01:38Z
Check the source to verify that this is the current version before use.

30.5.2.2 Lower lobe. The B747 lower lobe has three sections (see figure 111). The forward lower lobe (FLL) and center lower lobe (CLL) can carry five and four pallets, respectively. Cargo carried in either of these two sections is restricted to 1.57 m (62 in.) in height measured from the top of the pallet. Doors for loading the lower lobe measure 2.64 m (104 in.) wide by 1.68 m (66 in.) high. As with the main deck side door loading operation, longer cargo can be loaded if it can be turned in the doorway. Figure 115 provides a package size relationship that can be used for planning purposes.

The aft bulk compartment (ABC) has a solid subfloor that slants up toward the tail of the fuselage. It is normally used for baggage or small bulk cargo and can carry 22.7 m^3 (800 ft^3).

30.5.3 McDonnell Douglas DC-10. The DC-10 is a wide-body tri-jet flown by United States and foreign airlines in both the passenger and cargo configurations. The DC-10 can carry 236 to 380 passengers or 69,383 kg (152,964 lb) of cargo. The actual passenger/cargo capability will vary by aircraft series and configuration. The DC-10-10/30/40 are passenger aircraft, while the DC-10-10CF/30CF are convertible aircraft which can be configured for either all passenger or all cargo configurations.

This section will address designing for air transportability aboard DC-10-10CF and DC-10-30CF. Charts in this section provide dimensional limitations of cargo designed for loading aboard these aircraft. As in the case of all CRAF missions, load planning is subject to the approval of the individual carrier.

The DC-10 has two levels for cargo loading: the main deck and the lower lobe compartments. The following paragraphs detail the cargo capabilities of these levels, and relative door locations for the DC-10 are shown in figure 116.

30.5.3.1 Main deck. The main deck can be configured to accommodate 30 pallet positions. Pallets up to a maximum weight of 4536 kg (10,000 lb) (including pallet and nets) may be carried in certain sections of the aircraft subject to weight and balance, concentrated loads, and pallet position loading restrictions. Figure 117 depicts the 30 pallet configuration and details specific loading limitations for the main deck.

The DC-10-10CF main deck is loaded through the side door located on the forward left side of the aircraft (FUS STA 625 - FUS STA 765) at a height of approximately 4.88 m (16 ft) above the ground. Although the door itself is 3.57 m (140 in.) wide by 2.59 m (102 in.) high, the inside ceiling height is only 2.41 m (95 in.). Thus the maximum cargo height is limited to 2.26 m (89 in.) after allowance for roller and pallet height and 51 mm (2 in.) top clearance. Cargo carried forward of FUS STA 625 or aft of FUS STA 774 is further restricted to a height of 2.08 m (82 in.) above the pallet surface.

Longer cargo loads must be turned 1.57 rad (90°) in order to be moved either forward or aft in the aircraft. Due to the circular cross-section of the fuselage, allowable cargo length is a function of both width and height. Figure 118 provides design guidance in terms of package dimensions for loading cargo into the aircraft through the main deck door.

Source: https://assist.dla.mil -- Downloaded: 2016-12-11T01:38Z
Check the source to verify that this is the current version before use.

30.5.3.2 Lower lobe compartments. The DC-10 has three lower lobe compartments: forward lower lobe (FLL), center lower lobe (CLL), and aft bulk compartment (ABC). There is a wide variation in the length of these three compartments and in their access doors.

a. Front lower lobe. The FLL of the DC-10 has a solid floor. With an upper galley configuration, 8.62 cubic meters (3045 cubic feet) are available. The lower galley, configuration makes 36.8 cubic meters (1300 cubic feet) available. Most upper galley models have the large 3.69 m 104 in.) wide by 1.67 m (66 in.) high cargo door. However, due to lack of vertical restraint capability, 463L pallets cannot be loaded in the FLL. All cargo must be bulk loaded by hand. There is a large variation with the location of the galley and the size of the FLL door.

b. Center lower lobe. The CLL of the DC-10 has a solid floor. Most DC-10s have the standard 43.9 m^3 (1550 ft^3) capability and the 1.11 m (44 in.) by 1.22 m (70 in.) by 1.67 m (66 in.) door. Some models have an extended CLL of 54.8 m^3 (1,935 ft^3) but retain the 1.78 m (70 in.) by 1.67 m (66 in.) door.

c. Aft bulk compartment. The ABC has a solid floor. Most DC-10s have the standard 22.7 m^3 (805 ft^3) capability and the 1.11 m (44 in.) by 1.22 m (48 in.) door. This door is located on the left side of the aircraft. If the CLL is extended, the ABC will be 14.4 m^3 (510 ft^3), with a 0.76 m (30 in.) by 0.91 m (36 in.) door. The ABC and CLL would then be separated by only a curtain as opposed to the wall found in the standard configuration.

30.5.4 Lockheed L-1011. The Lockheed L-1011 is a wide-body, long-range, tri-jet passenger aircraft. The L-1011 can carry 238 to 293 passengers depending on the specific configuration, furnishings, galley location, etc. The cargo capability is limited to bulk (non-palletized) cargo and, at the time of this publication, there is no cargo variation available for military use.

30.5.5 Boeing 707. The narrow-body B707 aircraft can carry from 27,125 kg (59,800 lb) to 33,112 kg (73,000 lb), depending on aircraft series, interior configuration, and contract agreements. The convertible and freighter versions can accept to thirteen 463L pallets. At a payload of 27,125 kg (59,800 lb) an average of 2087 kg (46,000 lb) per pallet position, the aircraft will fly a 2300 NM leg.

30.5.5.1 Main deck. Cargo is loaded onto the main deck of the B707 through a cargo door on the forward left side of the fuselage. The door is 3.40 m (134 in.) wide by 2.31 m (91 in.) high, limiting the maximum cargo height to 2.16 m (85 in.) above the top of the pallet. Maximum individual pallet loads are given in figure 119. It is possible to load packages longer than the door length provided the pallet train can be turned in the doorway. Figure 120 provides generalized maximum package size guidance for planning purposes.

30.5.5.2 Lower lobe compartments. Two lower compartments are available for cargo loading. Due to the contoured floor, these compartments will accommodate hand-loadable bulk cargo only.

Source: https://assist.dla.mil -- Downloaded: 2016-12-11T01:38Z
Check the source to verify that this is the current version before use.

30.5.6 DC-8. The narrow-body DC-8 aircraft can carry 23,587 to 40,823 kg (528,000 to 90,000 lb) of cargo or 165 to 252 passengers, depending on individual aircraft configurations and contract requirements. The DC-8-30 and -50 series have 13 pallet positions, the DC-8-62CF has 14 pallet positions and the Stretch DC-8-61F/63F/CF and 71CF/73F/73CF each have 18 pallet positions. For planning purposes, with the exception of the DC-8-33F and DC-8-61CF, each variation will carry its maximum number of pallets, at an average pallet weight of 2086 kg (4600 lb), a distance of 2300 NM. The DC-8-33F and DC-8-61CF are limited in the weight they are able to carry for 2300 NM.

30.5.6.1 Main deck. The main cargo deck is loaded through a side door on the forward left side of the fuselage. The door is 3.56 m (140 in.) wide by 216 m (85 in.) high, limiting cargo to 2.02 m (79.5 in.) above the top surface of the pallet. Packages longer than the width of the door must be rotated 1.57 rad (90°) upon entering the aircraft and moved rearward. Charts indicating the maximum package size loadable through the side cargo door are given in figure 121. Maximum individual pallet loads for the 13, 14, and 18 pallet configurations are given in figure 122. Rolling stock, within the envelope limitations of the cargo compartment, may be loaded directly onto the main deck provided a palletized or shored subfloor is in place.

30.5.6.2 Lower lobe compartments. The DC-8 has two large lower lobe compartments. Due to the door size restrictions and contoured floor, only hand-loaded cargo can be carried.

Source: https://assist.dla.mil -- Downloaded: 2016-12-11T01:38Z
Check the source to verify that this is the current version before use.

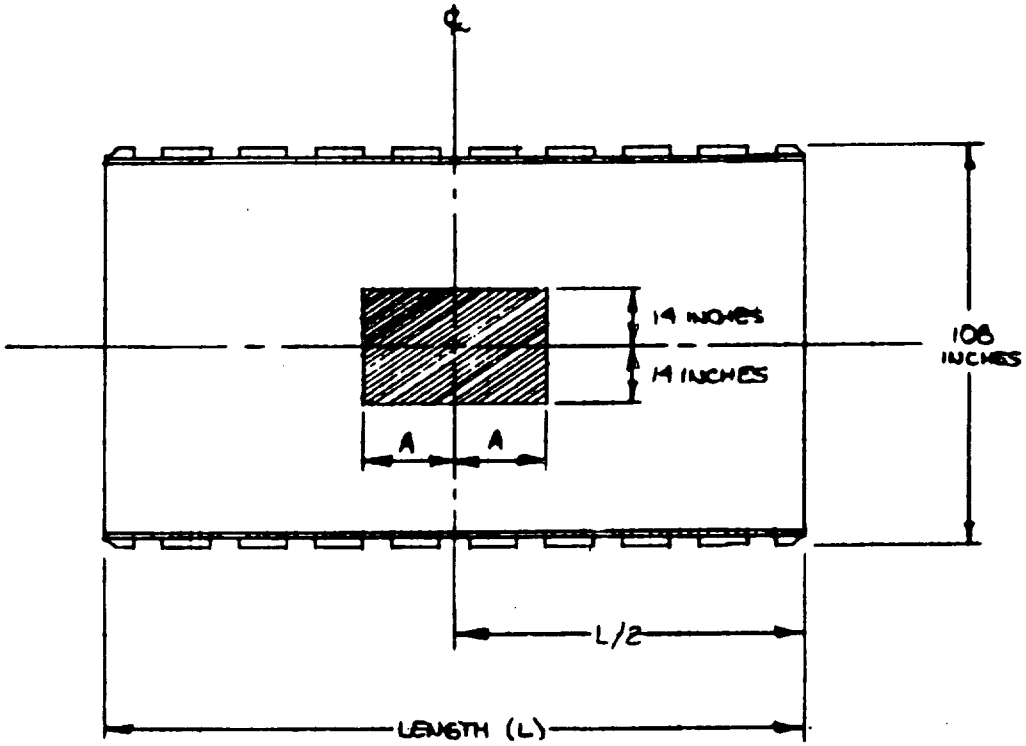

PLATFORM LENGTH (L)	DIMENSION A
8 feet	18.0 inches
12 feet	19.5 inches
16 feet	21.0 inches
20 feet	22.5 inches
24 feet	24.0 inches
28 feet	48.0 inches*
32 feet	72.0 inches*

* The center of gravity cannot exceed 190 and 209 inches from the forward end of the airdrop platform for the C-130 and C-141 respectively.

FIGURE 1. Center of gravity limits.

Source: https://assist.dla.mil -- Downloaded: 2016-12-11T01:38Z
Check the source to verify that this is the current version before use.

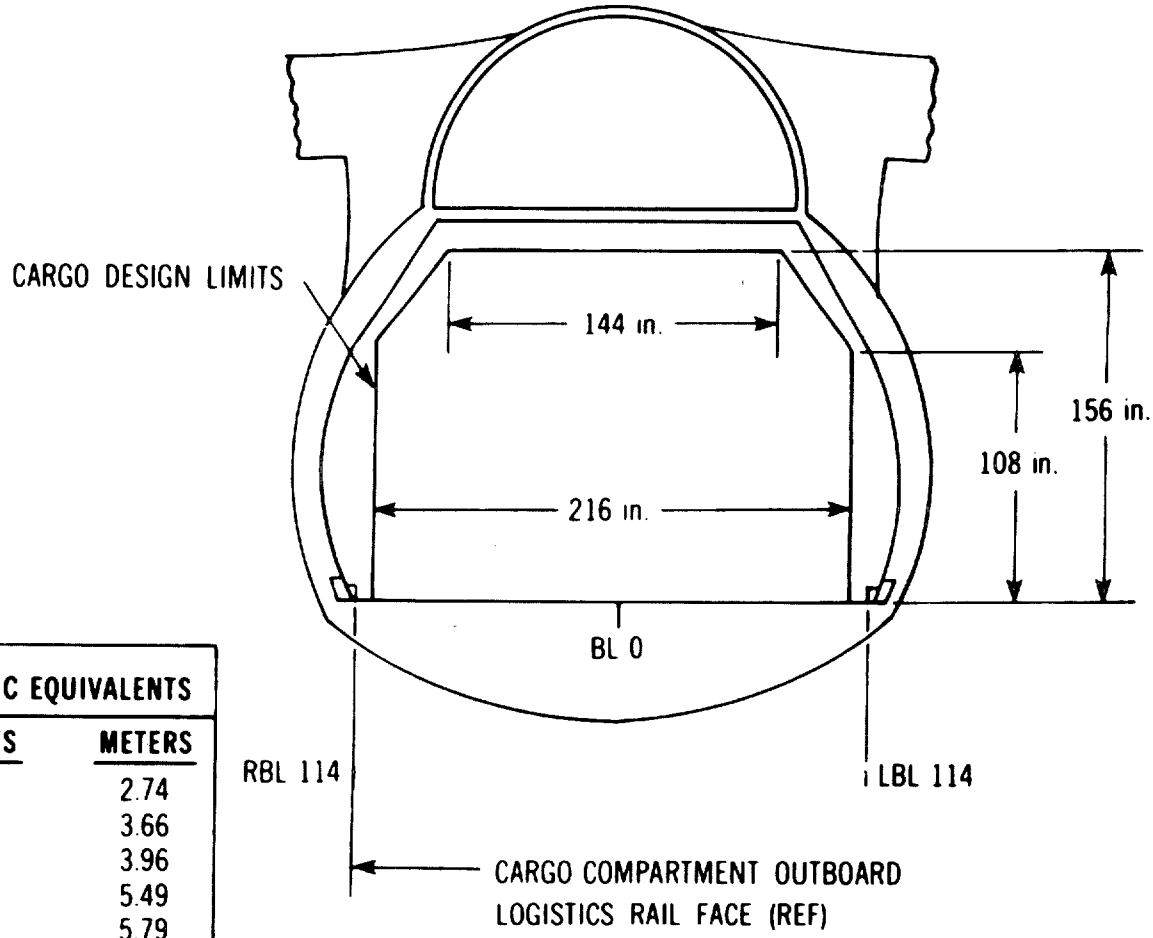

METRIC EQUIVALENTS	
INCHES	METERS
108	2.74
144	3.66
156	3.96
216	5.49
228	5.79

NOTE: Cargo dimensional design limits shown above are the maximum allowable dimensions to be used in the design of cargo items to be transported in the C-5A Aircraft.

FIGURE 2. C-5A cargo dimensional design limit.

Source: https://assist.dla.mil -- Downloaded: 2016-12-11T01:38Z
Check the source to verify that this is the current version before use.

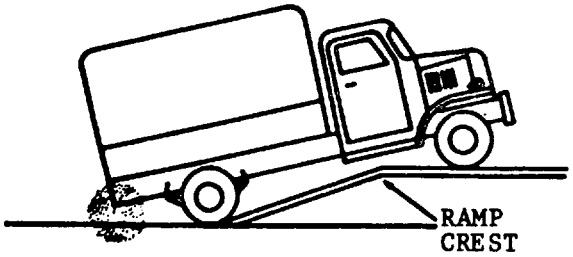

GROUND CONTACT LIMITATION

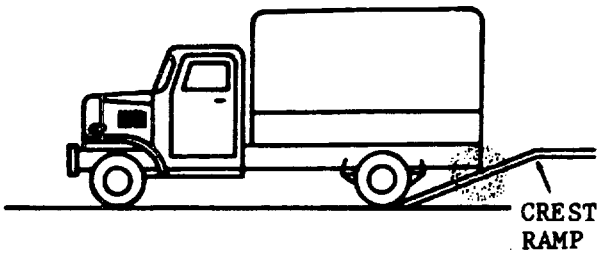

RAMP CONTACT LIMITATION

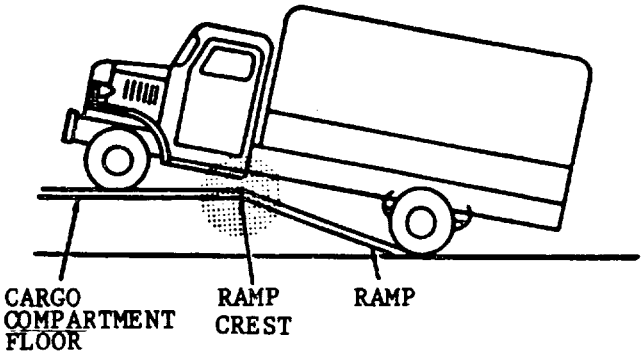

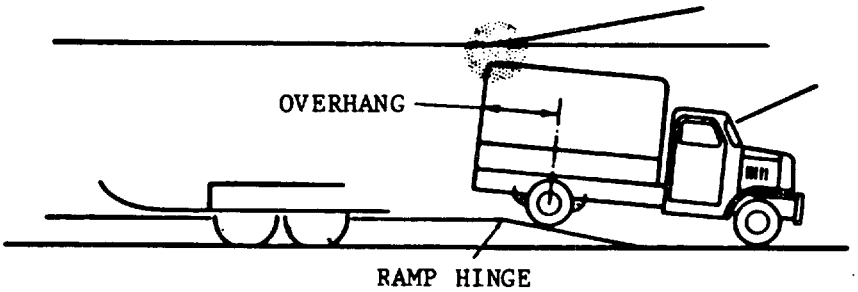

= CRITICAL POINT

FIGURE 3. Ramp crest.

Source: https://assist.dla.mil -- Downloaded: 2016-12-11T01:38Z
Check the source to verify that this is the current version before use.

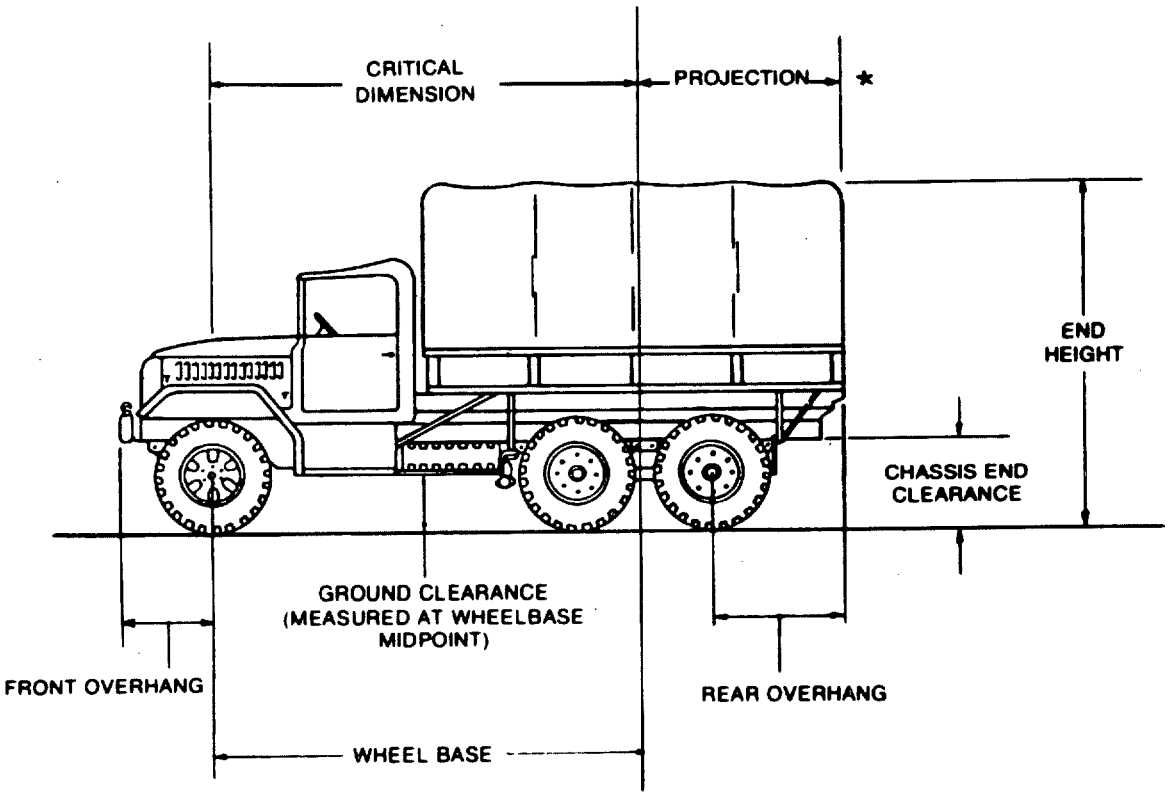

* Provided 15° articulation in bogie, dimensions can be measured from center of bogie in lieu of center of rear most axle.

FIGURE 4. Standard dimensional terms.

Source: https://assist.dla.mil -- Downloaded: 2016-12-11T01:38Z
Check the source to verify that this is the current version before use.

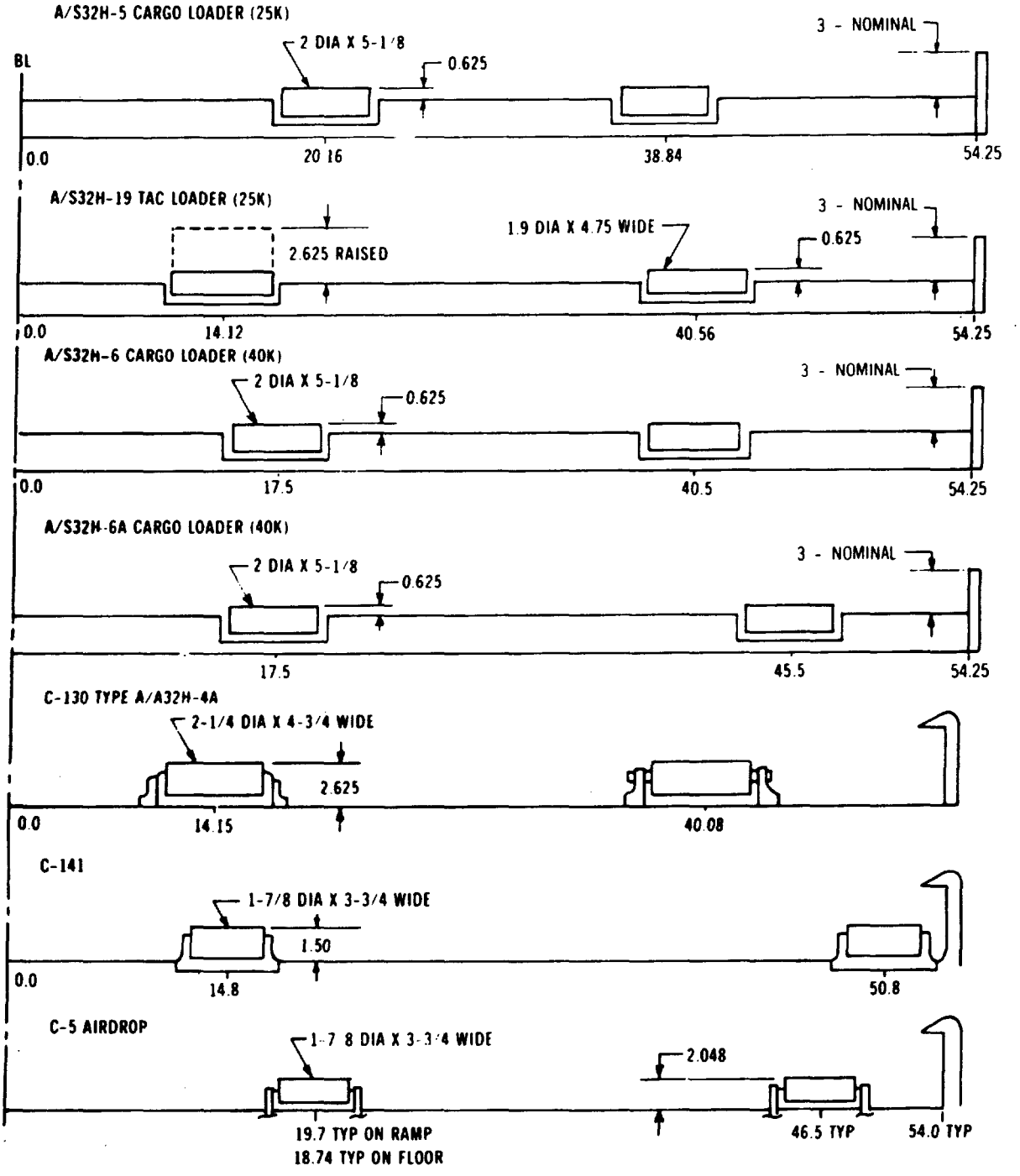

BL 0.0 is centerline of aircraft floor or loader. Rollers are on 10-in. centers fore and aft. Dimensions in inches.

FIGURE 5. Aircraft and loader roller locations.

Source: https://assist.dla.mil -- Downloaded: 2016-12-11T01:38Z
Check the source to verify that this is the current version before use.

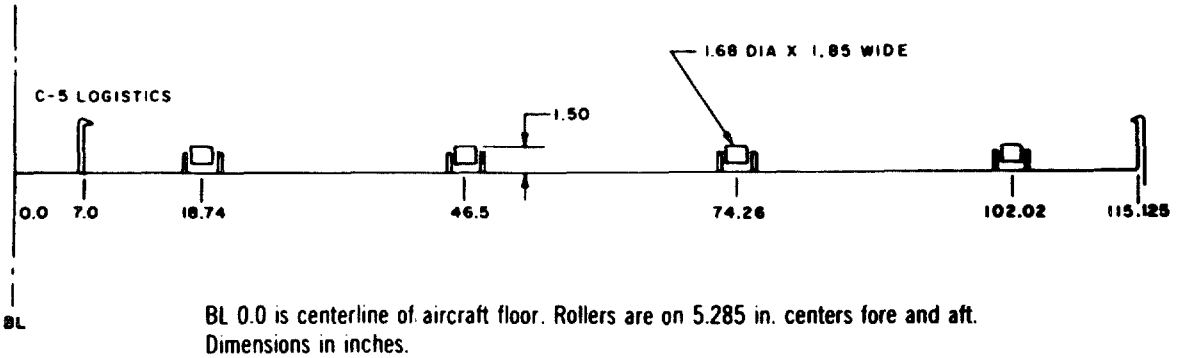

BL 0.0 is centerline of aircraft floor. Rollers are on 5.285 in. centers fore and aft.
Dimensions in inches.

METRIC EQUIVALENTS

INCHES	METERS
0.625	15.9 mm
1.5	38.1 mm
1.68	42.7 mm
1.85	47.0 mm
1.88	47.8 mm
2.0	50.8 mm
2.048	52.0 mm
2.25	57.2 mm
2.625	66.7 mm
3.75	95.3 mm
4.75	120.7 mm
5.13	130.3 mm
5.285	134.2 mm
7.0	177.8 mm
14.12	358.7 mm
14.15	359.4 mm
14.8	375.9 mm
17.5	444.5 mm
18.74	476.0 mm
19.7	500.4 mm
20.0	508.0 mm
20.16	512.1 mm
38.84	486.5 mm
40.08	1.02 m
40.56	1.03 m
45.5	1.16 m
46.5	1.18 m
50.178	1.28 m
50.8	1.29 m
54.0	1.37 m
54.25	1.38 m
74.26	1.89 m
102.02	2.59 m
115.125	2.92 m

FIGURE 5. Aircraft and loader roller locations. (continued)

Source: https://assist.dla.mil -- Downloaded: 2016-12-11T01:38Z
Check the source to verify that this is the current version before use.

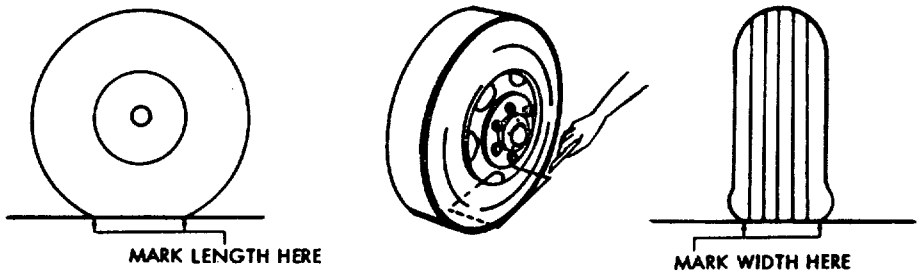

STEP 1

PARK THE VEHICLE ON A FLAT SURFACE.

STEP 2

PLACE MARKS ON THE SURFACE AS ILLUSTRATED.

STEP 3

MOVE THE VEHICLE. THE MARKS SHOULD APPEAR LIKE THIS:

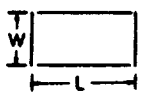

STEP 4

SINCE THE ACTUAL PAD PATTERN IS ELLIPTICAL IN SHAPE, USE THE FOLLOWING FORMULA TO DETERMINE PAD AREA:

$A = .785\ LW$

A = AREA
L = LENGTH
W = WIDTH

EXAMPLE PROBLEM:

ASSUME THE VEHICLE WHEEL PAD IS 12 INCHES LONG AND 6 INCHES WIDE.

$A = .785 \times 12 \times 6$
$A = 56.5$ SQUARE INCHES

STEP 5

THE WHEEL LOAD MUST BE KNOWN TO DETERMINE THE PSI EXERTED BY THE TIRE ON THE PAD AREA. THE FORMULA FOR WHEEL LOAD IS:

$$\frac{\text{AXLE WEIGHT}}{\text{NUMBER OF WHEELS}} = \text{WHEEL LOAD}$$

EXAMPLE PROBLEM:

ASSUME THE AXLE WEIGHT IS 2,000 POUNDS AND THAT THERE ARE TWO WHEELS.

$$\frac{2{,}000}{2} = 1{,}000 \text{ POUNDS WHEEL LOAD}$$

USING THE PAD AREA DETERMINED IN STEP 4 AND THE WHEEL LOAD ABOVE, USE THE FOLLOWING FORMULA TO DETERMINE THE PSI FLOOR LOADING:

$$\frac{\text{WHEEL LOAD}}{\text{PAD AREA}} = \text{FLOOR LOAD (PSI)}$$

$$\frac{1{,}000}{56.5 \text{ SQUARE INCHES}} = 17.7 \text{ PSI}$$

METRIC EQUIVALENTS

6 in. = 152 mm
12 in. = 305 mm
56 in.^{2} = 0.0361 m^2
1000 lbs = 454 kg
2000 lbs = 907 kg
17.7 psi = 124 kPa

FIGURE 6. Pneumatic tire pad and psi formula.

Source: https://assist.dla.mil -- Downloaded: 2016-12-11T01:38Z
Check the source to verify that this is the current version before use.

I. GENERAL CARGO

A. TO DETERMINE WEIGHT

WEIGHT UNIT ON SCALES

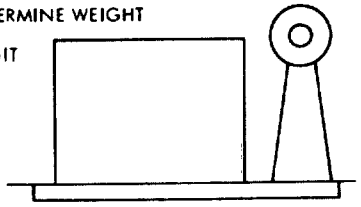

POSITION UNIT ON PIPE UNTIL IT BALANCES

B. TO DETERMINE CENTER OF GRAVITY

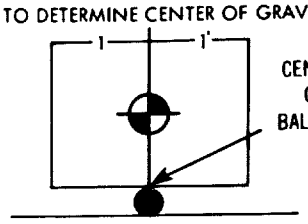

II. LARGE, OR SKID MOUNTED CARGO

A. TO DETERMINE WEIGHT

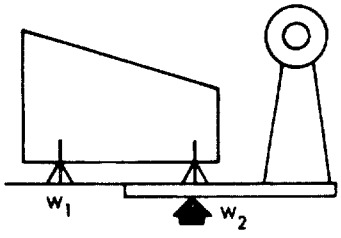

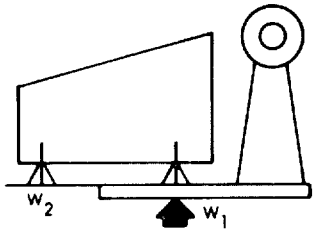

B. TO DETERMINE CENTER OF GRAVITY

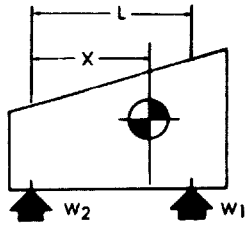

$$X = \frac{L\,W_1}{W}$$

1. IF SCALES CANNOT ACCOMMODATE ENTIRE UNIT, DETERMINE WEIGHT OF EACH END, USING ANGLE IRONS AS FULCRUMS.

NOTE

MARK FULCRUM LOCATIONS ON BOTH SIDES OF UNIT WHEN WEIGHING ONE END. LINE UP FULCRUMS WITH MARKS WHEN WEIGHING OPPOSITE END.

2. DETERMINE UNIT WEIGHT BY ADDING END WEIGHTS.

WHERE

X = DISTANCE FROM FULCRUM POINT TO CENTER OF GRAVITY

L = DISTANCE BETWEEN FULCRUM POINTS

W_1 = WEIGHT OF ONE END OF UNIT

W_2 = WEIGHT OF OTHER END OF UNIT

W = TOTAL UNIT WEIGHT ($W_1 + W_2$)

1. DETERMINE MOMENT AT FULCRUM POINT W_2 BY MULTIPLYING DISTANCE BETWEEN FULCRUM POINTS (L) BY UNIT WEIGHT AT FULCRUM POINT W1.

2. DETERMINE X, THE CENTER OF GRAVITY DISTANCE FROM FULCRUM POINT W_2 BY DIVIDING MOMENT AT FULCRUM POINT W_2 (FROM STEP 1) BY TOTAL UNIT WEIGHT (W).

III. TRACK-TYPE VEHICLES

A. TO DETERMINE WEIGHT

1. IF SCALES CANNOT ACCOMMODATE EITHER FULL TRACK LENGTH OR WEIGHT OF VEHICLE, RUN HALFWAY ONTO SCALES AND WEIGH.

2. MARK BOTH SIDES OF VEHICLE AT POINTS COINCIDING WITH EDGE OF SCALES. DRIVE OTHER END OF VEHICLE ONTO SCALES TO MARKS ON SIDES OF VEHICLE AND WEIGH.

3. DETERMINE UNIT WEIGHT BY ADDING WEIGHTS OF BOTH ENDS OF VEHICLE.

B. TO DETERMINE CENTER OF GRAVITY

DRIVE VEHICLE ONTO WOODEN BEAM UNTIL IT BALANCES

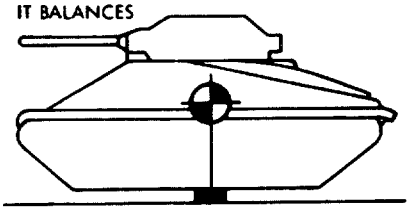

NOTE

THIS FIGURE ILLUSTRATES METHODS OF DETERMINING THE WEIGHT AND CENTER-OF-GRAVITY LOCATION OF TYPICAL CARGO UNITS. THESE CARGO UNITS INCLUDE GENERAL CARGO, LARGE OR SKID-MOUNTED CARGO, AND TRACK-TYPE VEHICLES.

FIGURE 7. Cargo unit weight and CG.

Source: https://assist.dla.mil -- Downloaded: 2016-12-11T01:38Z
Check the source to verify that this is the current version before use.

I CENTER OF GRAVITY LOCATION

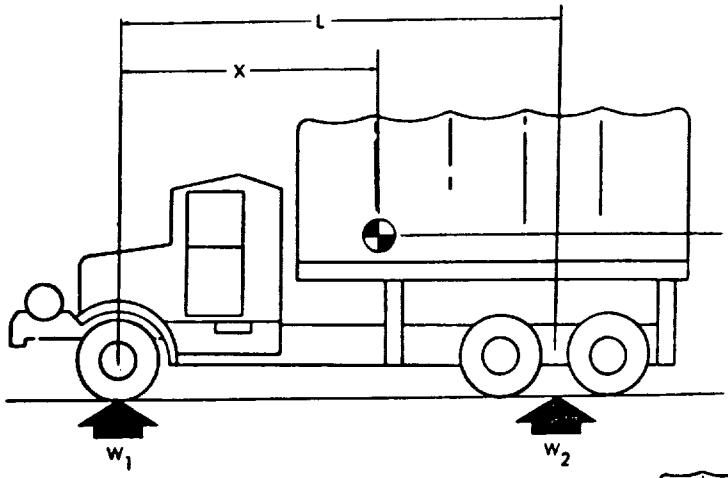

$$X = \frac{L\,W_2}{W}$$

WHERE

X = DISTANCE FROM FRONT AXLE TO UNIT CENTER OF GRAVITY LOCATION

L = WHEELBASE

W_1 = FRONT AXLE LOAD

W_2 = REAR AXLE LOAD

W = TOTAL WEIGHT OF UNIT

II STEPS IN DETERMINING CENTER OF GRAVITY LOCATION

1. DETERMINE AXLE LOADS BY WEIGHING ALL AXLES (W_1 AND W_2).

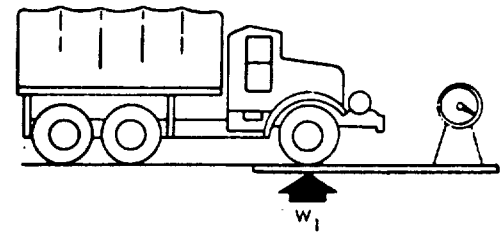

NOTE

VEHICLE MUST BE LEVEL WHEN WEIGHING.

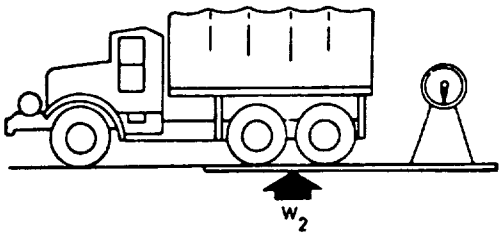

2. DETERMINE TOTAL WEIGHT OF UNIT (W) BY ADDING AXLE LOADS (W_1 AND W_2).

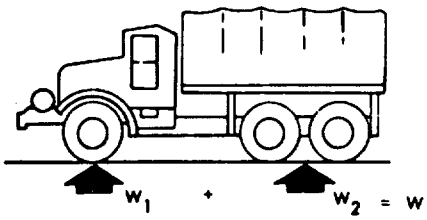

3. DETERMINE WHEELBASE (L).

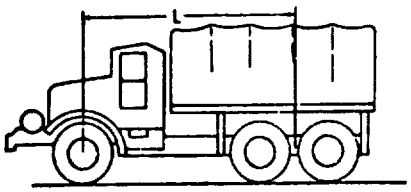

FIGURE 8. CG location - vehicle.

Source: https://assist.dla.mil -- Downloaded: 2016-12-11T01:38Z
Check the source to verify that this is the current version before use.

4. DETERMINE REAR AXLE MOMENT ABOUT FRONT AXLE BY MULTIPLYING REAR AXLE LOAD (W_2) BY WHEELBASE (L).

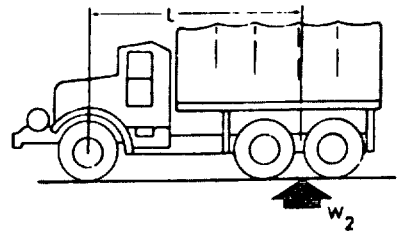

5. DETERMINE CENTER OF GRAVITY DISTANCE FROM FRONT AXLE (X) BY DIVIDING REAR AXLE MOMENT BY TOTAL WEIGHT (W).

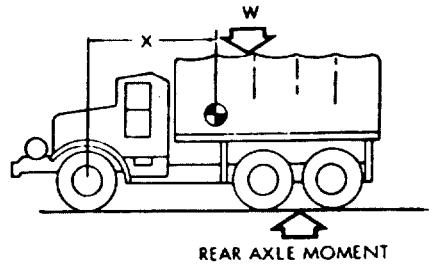

III SAMPLE PROBLEM

DETERMINE THE LOCATION OF THE CENTER OF GRAVITY OF A VEHICLE WHOSE WEIGHT AND DIMENSIONS ARE AS SHOWN BELOW.

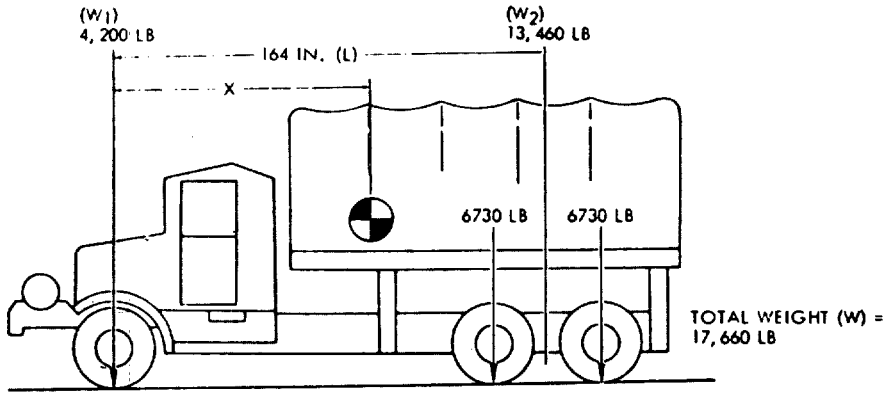

SOLUTION:

USING THE FORMULA $X = \frac{L\,W_2}{W}$

$X = \frac{164 \text{ IN.} \times 13{,}460 \text{ LB}}{17{,}660 \text{ LB}}$

$\boxed{X = 125 \text{ IN.}}$

METRIC EQUIVALENTS	
125 in.	= 3.18 m
164 in.	= 4.17 m
4 200 lb	= 1905.0 kg
6 730 lb	= 3052.7 kg
13 460 lb	= 6105.3 kg
17 660 lb	= 8010.4 kg

FIGURE 8. CG location - vehicle. (continued)

Source: https://assist.dla.mil -- Downloaded: 2016-12-11T01:38Z
Check the source to verify that this is the current version before use.

I. CENTER OF GRAVITY LOCATION

$$X = \frac{L_1 W_2 + L W_3}{W}$$

WHERE

X = DISTANCE FROM FRONT AXLE TO UNIT CENTER-OF-GRAVITY LOCATION
W_1 = FRONT AXLE LOAD
L_1 = TRACTOR WHEELBASE
W_2 = TRACTOR REAR AXLE LOAD
L_2 = TRAILER WHEELBASE
W_3 = TRAILER AXLE LOAD
L = TOTAL WHEELBASE OF UNIT
W = TOTAL WEIGHT OF UNIT

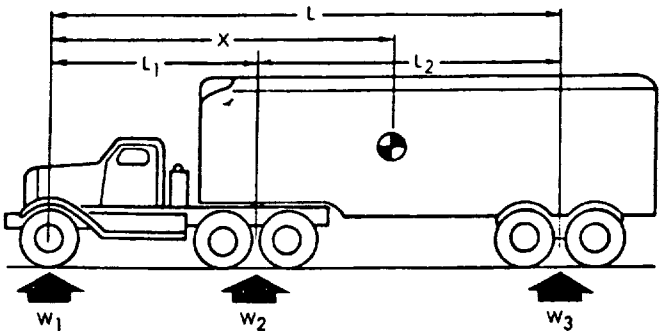

TO LOCATE CARGO UNIT CENTER OF GRAVITY, DETERMINE X

II. STEPS IN DETERMINING CENTER OF GRAVITY LOCATION (X).

1. DETERMINE AXLE LOADS BY WEIGHING ALL AXLES SEPARATELY (W_1, W_2, and W_3).

NOTE:

VEHICLE MUST BE LEVEL WHEN WEIGHING.

2. DETERMINE TOTAL WEIGHT OF UNIT (W) BY ADDING ALL AXLE LOADS.
3. DETERMINE TRACTOR WHEELBASE (L_1) AND TRAILER WHEELBASE (L_2).
4. DETERMINE TOTAL WHEELBASE OF UNIT (L).
5. DETERMINE TRACTOR REAR AXLE MOMENT ABOUT FRONT AXLE BY MULTIPLYING TRACTOR WHEELBASE (L_1) BY TRACTOR REAR AXLE LOAD (W_2).
6. DETERMINE TRAILER AXLE MOMENT BY MULTIPLYING TOTAL WHEELBASE (L) BY TRAILER AXLE LOAD (W_3).
7. DETERMINE TOTAL MOMENT ABOUT FRONT AXLE BY ADDING TRAILER AXLE MOMENT AND TRACTOR REAR AXLE MOMENT.
8. DETERMINE CENTER-OF-GRAVITY DISTANCE FROM FRONT AXLE (X) BY DIVIDING TOTAL MOMENT BY TOTAL WEIGHT (W).

FIGURE 9 CG location - multiple unit vehicle.

Source: https://assist.dla.mil -- Downloaded: 2016-12-11T01:38Z
Check the source to verify that this is the current version before use.

III. SAMPLE PROBLEM:

DETERMINE THE LOCATION OF THE CENTER OF GRAVITY OF A VEHICLE WHOSE WEIGHT AND DIMENSIONS ARE AS SHOWN BELOW.

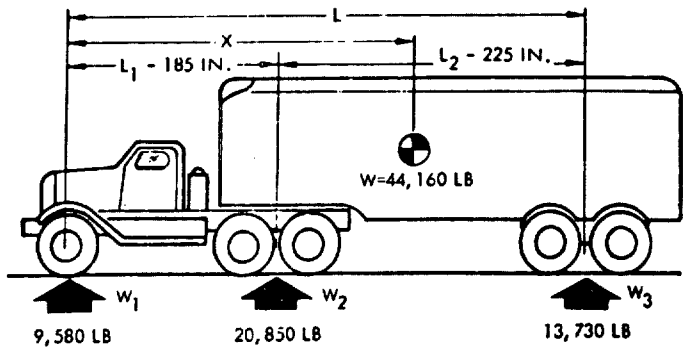

SOLUTION:

USING THE FORMULA $X = \frac{L_1 W_2 + L W_3}{W}$

$$X = \frac{(185 \text{ IN.} \times 20,850 \text{ LB}) + (410 \text{ IN.} \times 13,730 \text{ LB})}{44,160 \text{ LB}}$$

$$\boxed{X = 214.8 \text{ IN.}}$$

METRIC EQUIVALENTS
185.0 in. - 4.7 m
225.0 in. - 5.72 m
214.8 in. - 5.456 m
9 580 lb - 4545 kg
13 730 lb - 6228 kg
20 850 lb - 9457 kg

FIGURE 9 CG location - multiple unit vehicle. (continued)

Source: https://assist.dla.mil -- Downloaded: 2016-12-11T01:38Z
Check the source to verify that this is the current version before use.

SAMPLE PROBLEM:

DETERMINE THE CENTER OF GRAVITY OF A TOTAL LOAD CONSISTING OF THREE VEHICLES HAVING THE FOLLOWING CHARACTERISTICS, AND LOCATED WITHIN THE AIRCRAFT AS SHOWN.

NOTE

FOR PURPOSES OF THIS EXAMPLE IT IS ASSUMED THAT THE DISTANCE BETWEEN THE TANDEM AXLES OF THE TRUCK IS 48 INCHES.

VEHICLE NO. 1	
GROSS WEIGHT	17,660 POUNDS
FRONT AXLE LOAD	4,200 POUNDS
REAR AXLE LOAD (TOTAL)	13,460 POUNDS
CENTER OF GRAVITY	125 INCHES AFT OF FRONT AXLE
VEHICLE NO. 2	
GROSS WEIGHT	18,000 POUNDS
FRONT AXLE LOAD	4,400 POUNDS
REAR AXLE LOAD	13,600 POUNDS
CENTER OF GRAVITY	123.9 INCHES AFT OF FRONT AXLE
VEHICLE NO. 3	
GROSS WEIGHT	16,000 POUNDS
FRONT AXLE LOAD	4,000 POUNDS
REAR AXLE LOAD (TOTAL)	12,000 POUNDS
CENTER OF GRAVITY	123 INCHES AFT OF FRONT AXLE

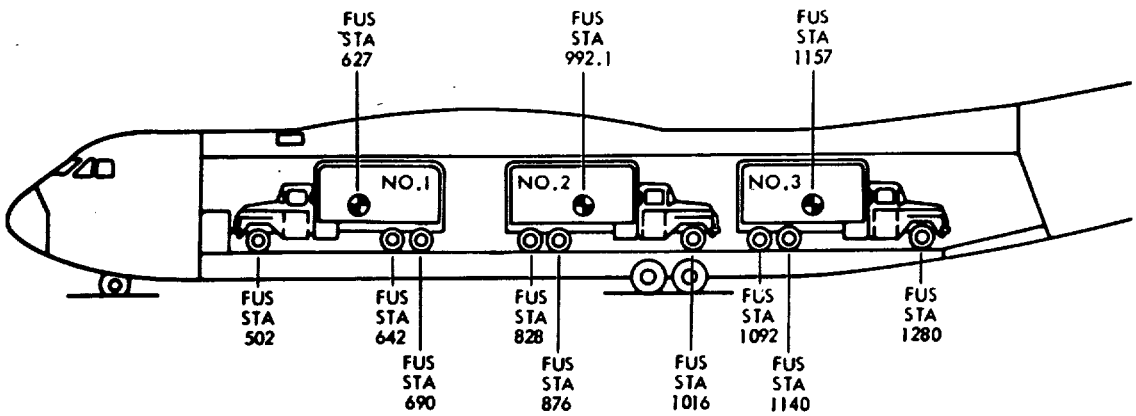

SOLUTION:

1. FIRST CHECK THE AXLE AND WHEEL LOADS OF EACH VEHICLE AGAINST THE FIGURE ON LOADING DATA TO ASSURE THAT THE CARGO FLOOR WILL NOT BE OVERLOADED.

VEHICLE NO. 1
EACH REAR AXLE LOAD OF 6,730 POUNDS AND EACH WHEEL LOAD (6,730/2=3,365 POUNDS) AT FUSELAGE STATIONS 642 AND 690 ARE WITHIN LIMITS. THE FRONT AXLE LOAD OF 4,200 POUNDS AND FRONT WHEEL LOAD OF 2,100 POUNDS AT FUSELAGE STATION 502 ARE WITHIN LIMITS.

FIGURE 10. Total load CG

Source: https://assist.dla.mil -- Downloaded: 2016-12-11T01:38Z
Check the source to verify that this is the current version before use.

VEHICLE NO. 2
EACH REAR AXLE LOAD (13,600 2 6,800 POUNDS) AND WHEEL LOAD (6,800 2 3,400 POUNDS) AT FUSELAGE STATIONS 828 AND 876 ARE WITHIN LIMITS. THE FRONT AXLE LOAD OF 4,400 POUNDS AND FRONT WHEEL LOAD OF 2,200 POUNDS AT FUSELAGE STATION 1016 ARE ALSO WITHIN LIMITS.

VEHICLE NO. 3
EACH REAR AXLE LOAD OF 6,000 POUNDS AND EACH WHEEL LOAD (6,000 2 3,000 POUNDS) AT FUSELAGE STATIONS 1092 AND 1140 ARE WITHIN LIMITS. THE FRONT AXLE LOAD OF 4,000 POUNDS AND FRONT WHEEL LOAD (4,000 2 2,000 POUNDS) AT FUSELAGE STATION 1280 ARE ALSO WITHIN LIMITS.

2. THE CENTER OF GRAVITY LOCATION FOR THE TOTAL LOAD IS EQUAL TO THE TOTAL MOMENT OF THE LOAD DIVIDED BY THE TOTAL WEIGHT OF THE LOAD. CG OF TOTAL LOAD = $\frac{\text{TOTAL MOMENT}}{\text{TOTAL WEIGHT}}$

3. CALCULATE THE TOTAL MOMENT OF THE LOAD BY MULTIPLYING THE FUSELAGE STATION WHERE THE CENTER OF GRAVITY OF EACH VEHICLE IS POSITIONED BY THE WEIGHT OF THE VEHICLE. ADD THESE THREE FIGURES TO OBTAIN THE TOTAL LOAD MOMENT IN INCH-POUNDS.

VEHICLE NO. 1	627 x 17,660	= 11,072,820
VEHICLE NO. 2	992.1 x 18,000	= 17,857,800
VEHICLE NO. 3	1157 x 16,000	= 18,512,000
TOTAL LOAD MOMENT		47,442,620

4. ADD THE WEIGHTS OF THE THREE VEHICLES TO OBTAIN THE TOTAL LOAD WEIGHT.

VEHICLE NO. 1	= 17,660 POUNDS
VEHICLE NO. 2	= 18,000 POUNDS
VEHICLE NO. 3	= 16,000 POUNDS
TOTAL LOAD WEIGHT	51,660 POUNDS

5. DIVIDE THE TOTAL LOAD MOMENT BY THE TOTAL LOAD WEIGHT TO OBTAIN THE FUSELAGE STATION AT WHICH THE CENTER OF GRAVITY OF THE TOTAL LOAD IS LOCATED.

$$\text{CG (TOTAL LOAD)} - \frac{47,442,620}{51,660}$$

CG (TOTAL LOAD) - FUS STA 918.4

NOTE

THE ABOVE CALCULATIONS DO NOT INCLUDE THE WEIGHT OF A CREW FOR THE VEHICLES OR ANY OTHER CARGO WHICH MAY BE CARRIED CONCURRENTLY.

FIGURE 10. Total load CG. (continued)

Source: https://assist.dla.mil -- Downloaded: 2016-12-11T01:38Z
Check the source to verify that this is the current version before use.

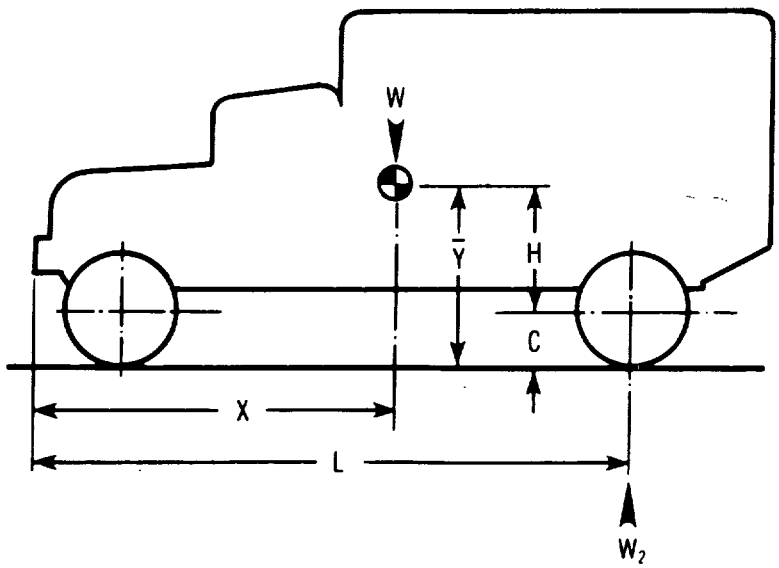

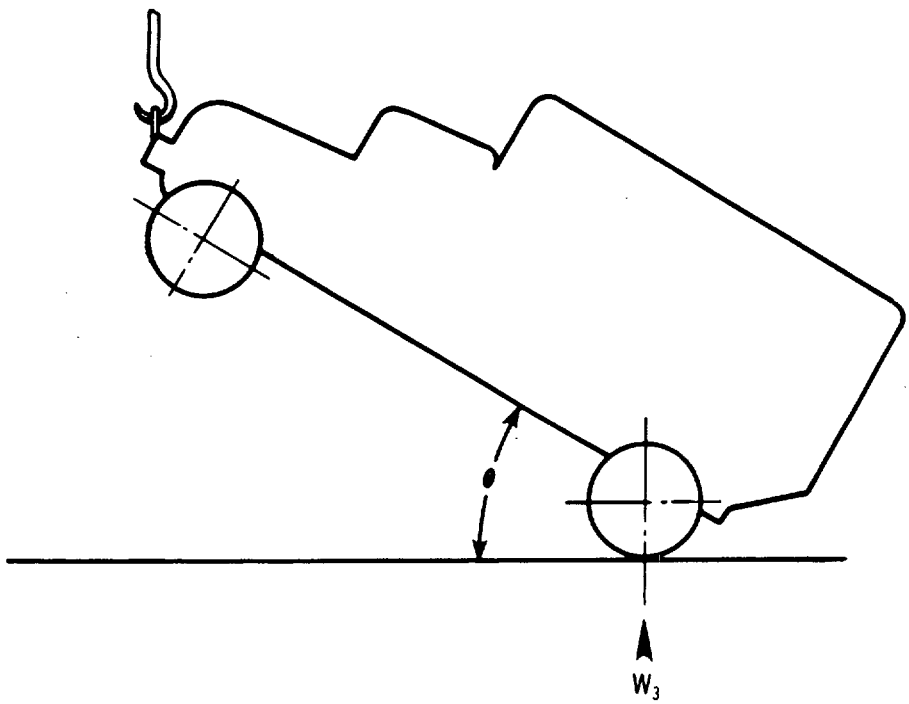

FIGURE 11. Weight for vertical CG.

Source: https://assist.dla.mil -- Downloaded: 2016-12-11T01:38Z
Check the source to verify that this is the current version before use.

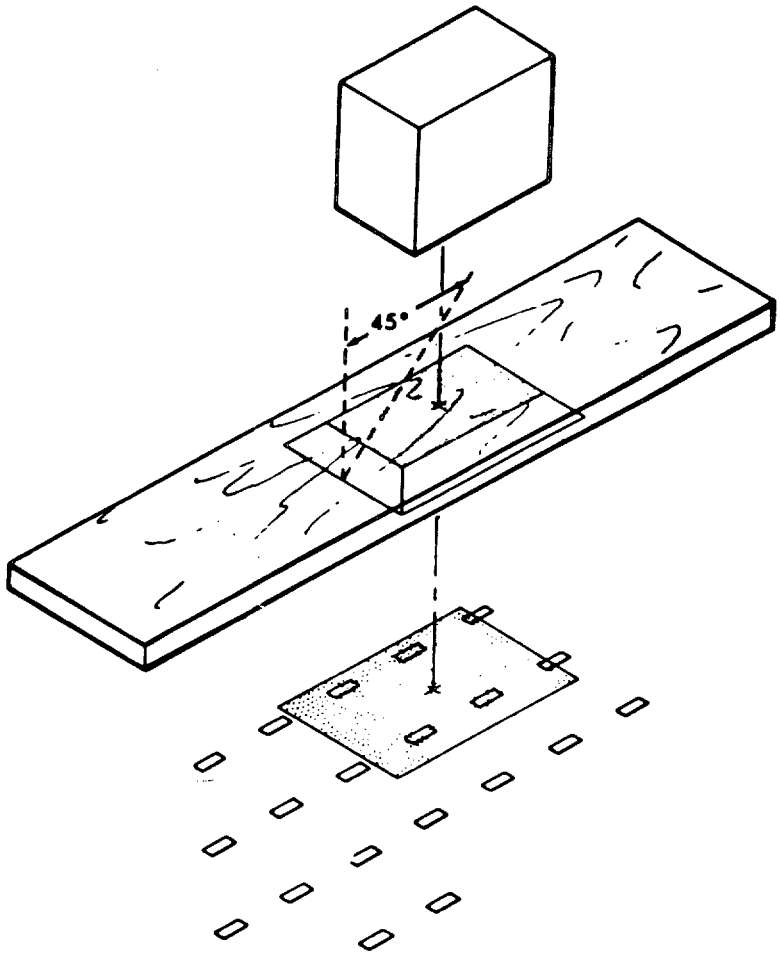

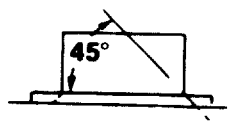

SPREADING EFFECT OF SHORING - CRATED CARGO

45° = 0.785 rad

FIGURE 12 Load shoring effect.

Source: https://assist.dla.mil -- Downloaded: 2016-12-11T01:38Z
Check the source to verify that this is the current version before use.

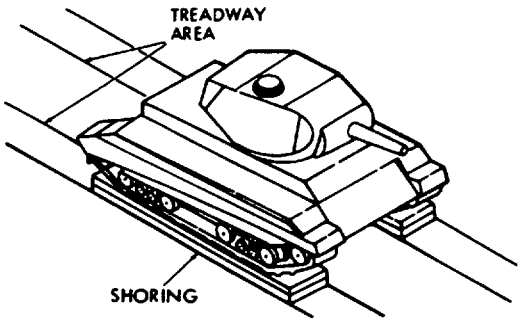

FIGURE 13. Parking shoring.

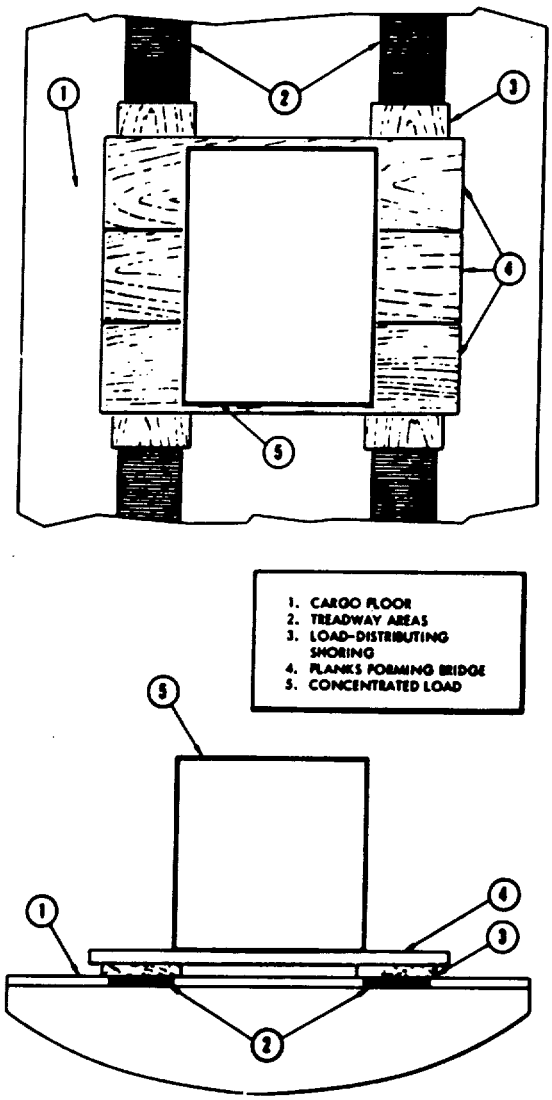

FIGURE 14. Bridge-type shoring.

Source: https://assist.dla.mil -- Downloaded: 2016-12-11T01:38Z
Check the source to verify that this is the current version before use.

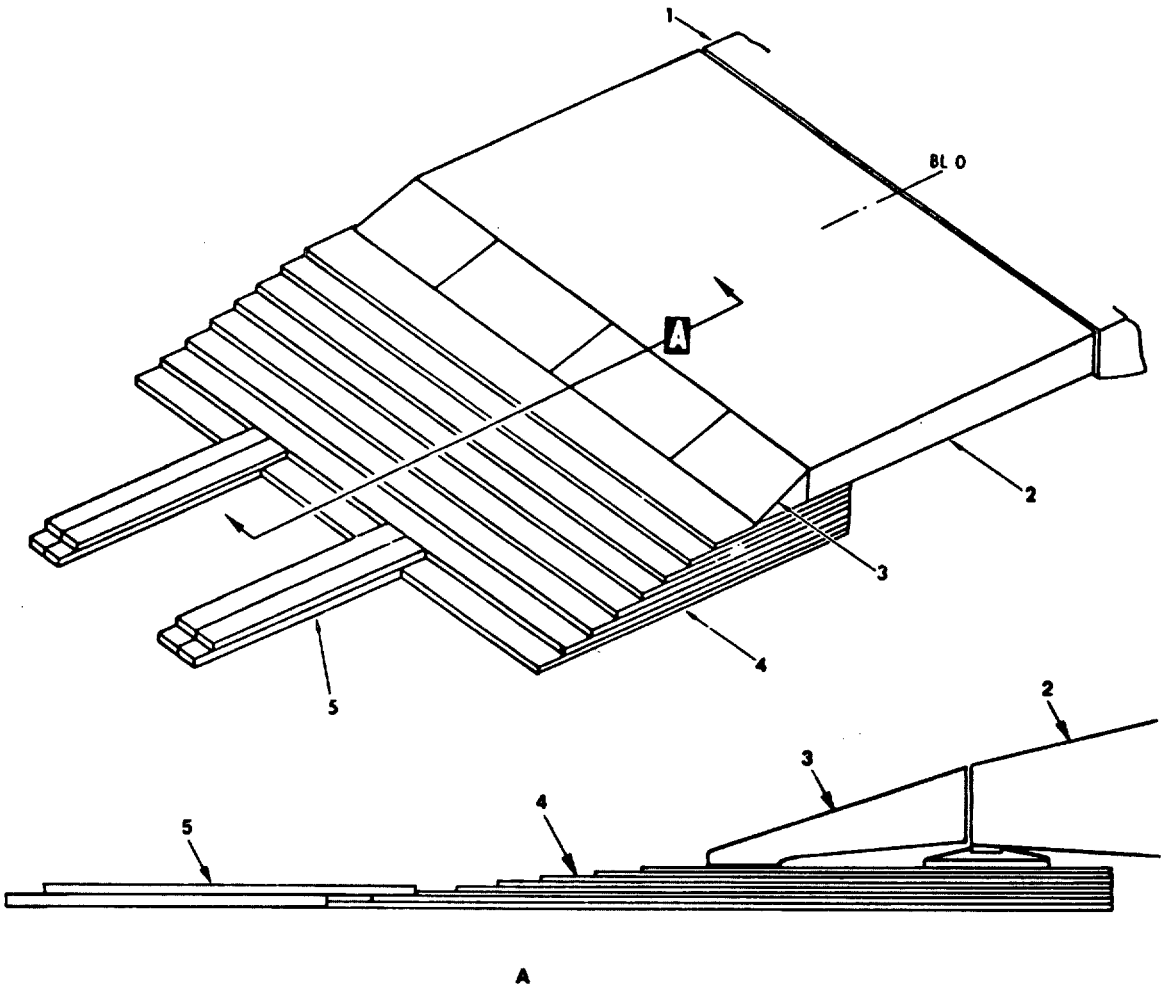

1. FORWARD RAMP
2. FORWARD RAMP EXTENSION
3. FORWARD RAMP EXTENSION TOES
4. STEP-UP SHORING
5. APPROACH SHORING

FIGURE 15. Step-up and approach shoring.

Source: https://assist.dla.mil -- Downloaded: 2016-12-11T01:38Z
Check the source to verify that this is the current version before use.

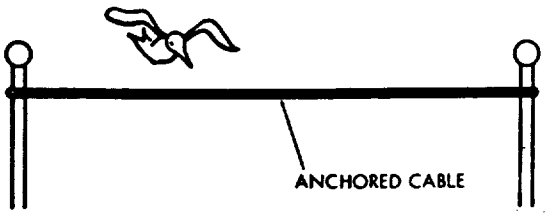

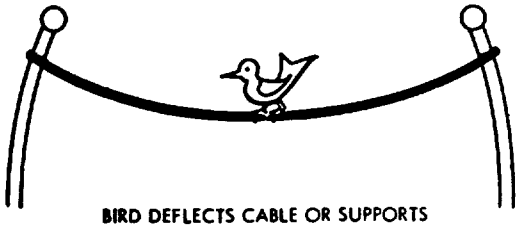

In this illustration, a very light load applied at 90 degrees to the direction of the cable will deflect it. However, if the weight is applied in the direction of the cable, the cable will support a weight equal to its strength.

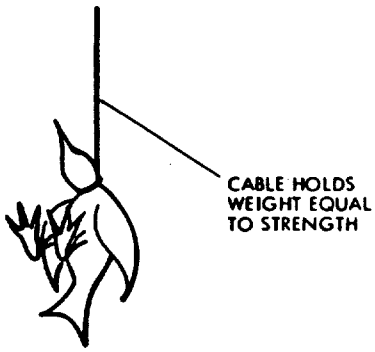

As shown by the bird on the wire, a small load applied vertically to stretched cable will induce a large load lengthwise in the cable. Shown below are calculations illustrating the magnitude of the loads in a stretched cable and a slack cable.

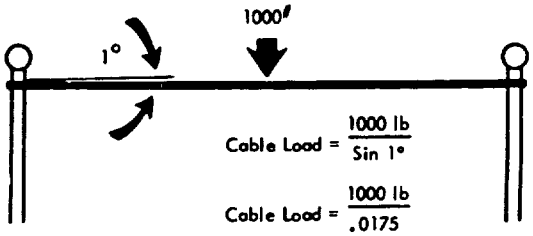

$$\text{Cable Load} = \frac{1000\ \text{lb}}{\text{Sin } 1°}$$

$$\text{Cable Load} = \frac{1000\ \text{lb}}{.0175}$$

$$\text{Cable Load} = 57,143\ \text{lb}$$

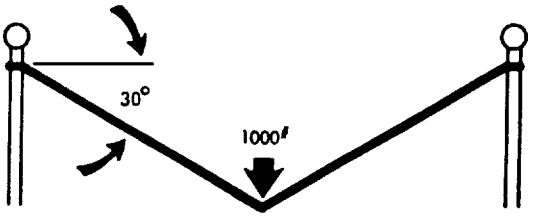

$$\text{Cable Load} = \frac{1000\ \text{lb}}{\text{Sin } 30°}$$

$$\text{Cable Load} = \frac{1000\ \text{lb}}{.5}$$

$$\text{Cable Load} = 2,000\ \text{lb}$$

Hence, the closer the tiedown can lie in the direction of the load the better the tiedown. Suspension bridges apply the same principle.

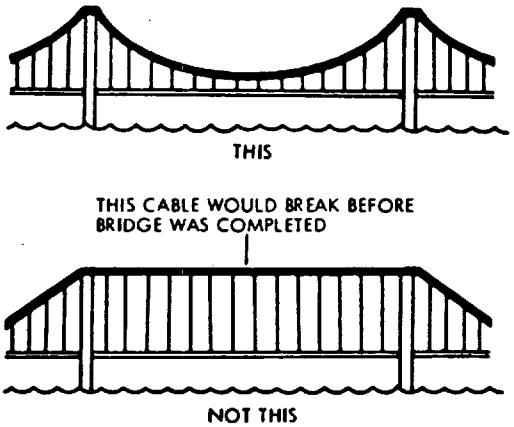

NOTE:	1000 lb = 453.6 kg
	2000 lb = 907.2 kg

FIGURE 16. Tiedown basic principles.

Source: https://assist.dla.mil -- Downloaded: 2016-12-11T01:38Z
Check the source to verify that this is the current version before use.

In tying down cargo, the following type of tiedown is satisfactory for upward restraint, but not for sideward or forward restraint.

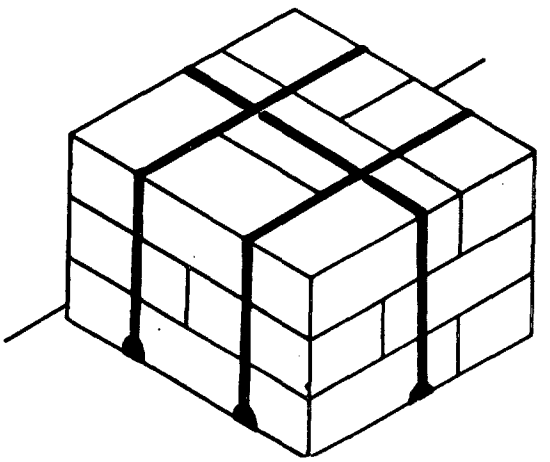

However, if the tiedowns are too long across the top of the load, a severe upward force will permit the cargo to move as shown:

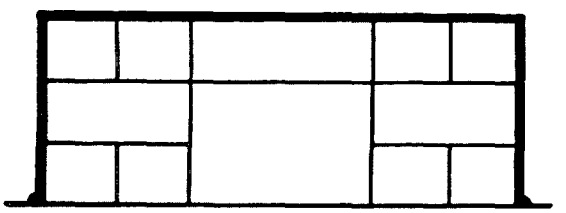

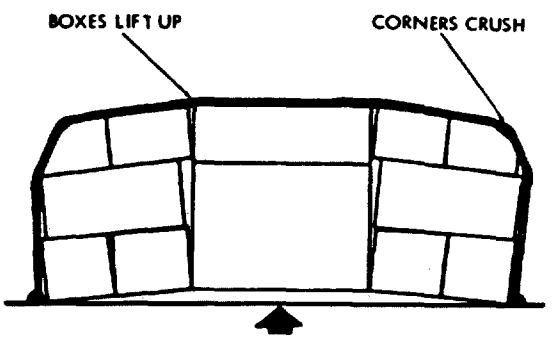

Hence, the length of ties across the top of a load should be kept short. For forward or aft restraint, the type of tiedown below will not prevent the cargo shifting except for the friction forces introduced.

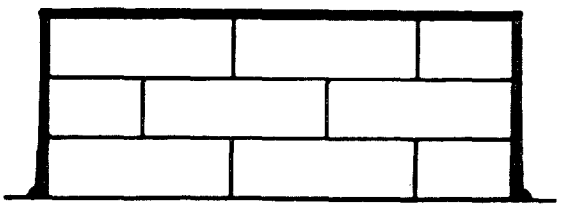

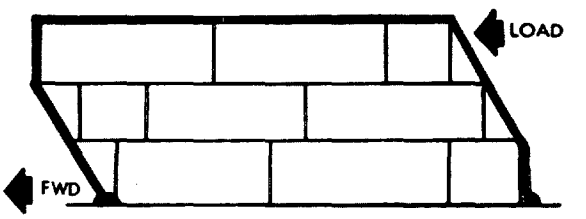

Neglecting friction, the tiedown cannot begin to restrain the load until it has shifted so that the tiedowns begin to go in the same direction as the force. The correct method of tying down such a load for forward movement is as follows:

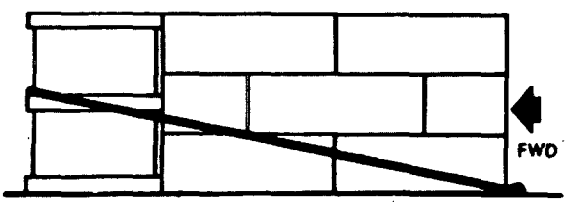

FIGURE 16. Tiedown basic principles. (continued)

Source: https://assist.dtic.mil -- Downloaded: 2016-12-11T01:38Z
Check the source to verify that this is the current version before use.

Ties made solely for one load direction cannot be expected to restrain cargo against a load applied simultaneously from another direction. This applies to tiedowns that are passed around or over the top of the cargo and not directly attached to it. Cargo properly restrained for all load directions is as shown.

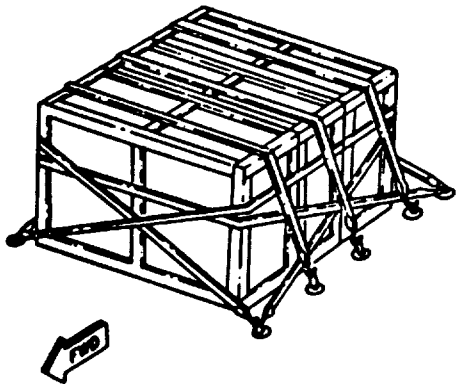

When a tiedown device is attached directly to a cargo unit and not merely passed over or around it, restraint can be applied for more than one load direction, depending on the strength of the device and the angle of pulloff from the tiedown fitting. By varying the angle of attachment, a tiedown device can be attached to the cargo so that restraint is available simultaneously in three directions. An example of such a tiedown is illustrated.

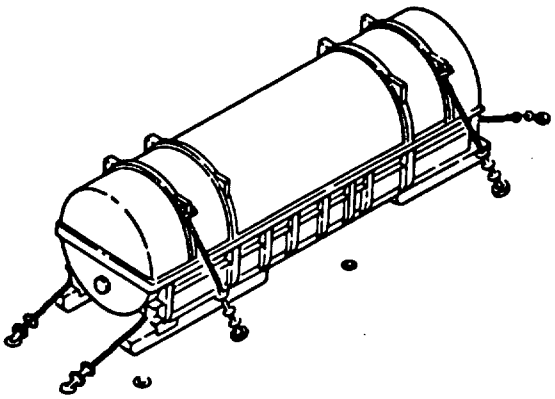

The point of attachment of a tiedown device to a cargo unit must be substantial enough to withstand the loads for which the cargo unit is being restrained. A tiedown device must not be attached to any convenient protrusion on a cargo unit without due consideration of the protrusion's strength.

When tiedown devices are attached to cargo, the lines of action of the tiedown devices should, if possible, intersect above the cargo center of gravity as shown. Such a tiedown reduces the tendency of cargo to overturn when subjected to combined upward and side loads.

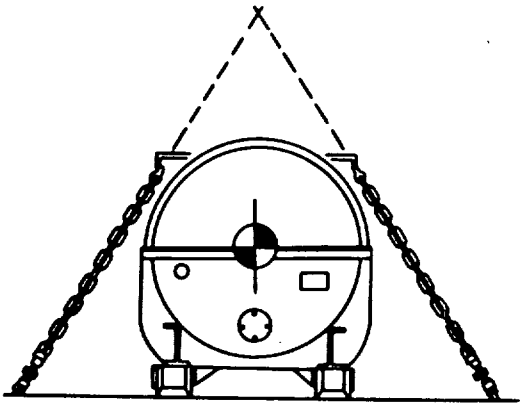

FIGURE 16. Tiedown basic principles. (continued)

Source: https://assist.dla.mil -- Downloaded: 2016-12-11T01:38Z
Check the source to verify that this is the current version before use.

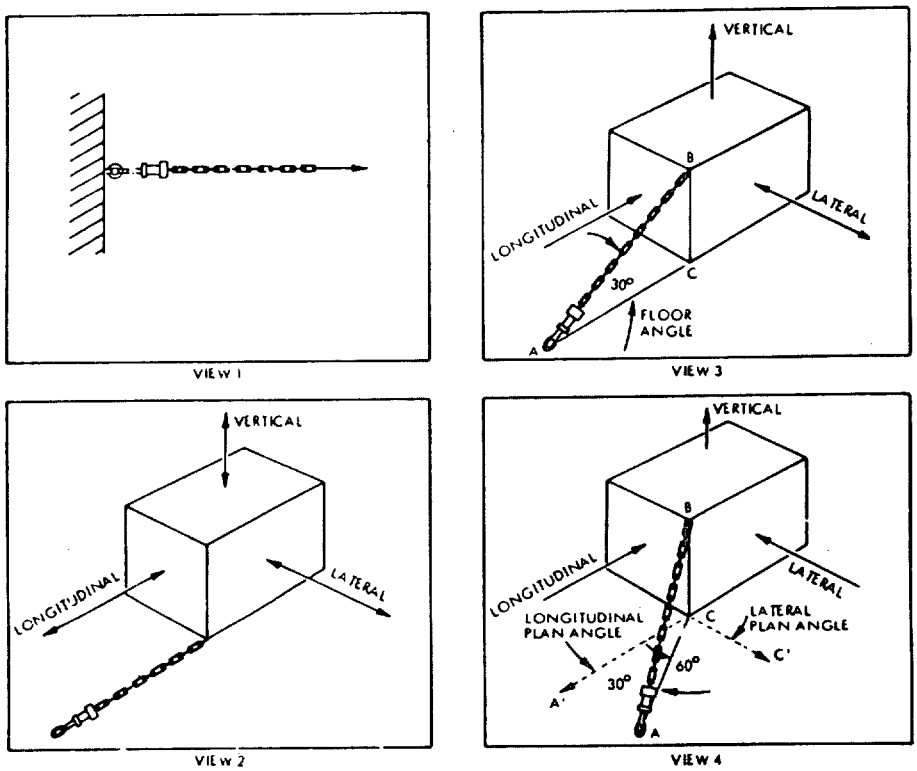

NOTE 30° = 0.524 rad
60° = 1.05 rad

FIGURE 17. Cargo restraint.

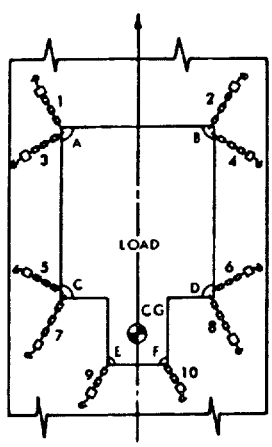

FIGURE 18. General rules for applying tiedowns.

Source: https://assist.dla.mil Downloaded: 2016-12-11T01:38Z
Check the source to verify that this is the current version before use.

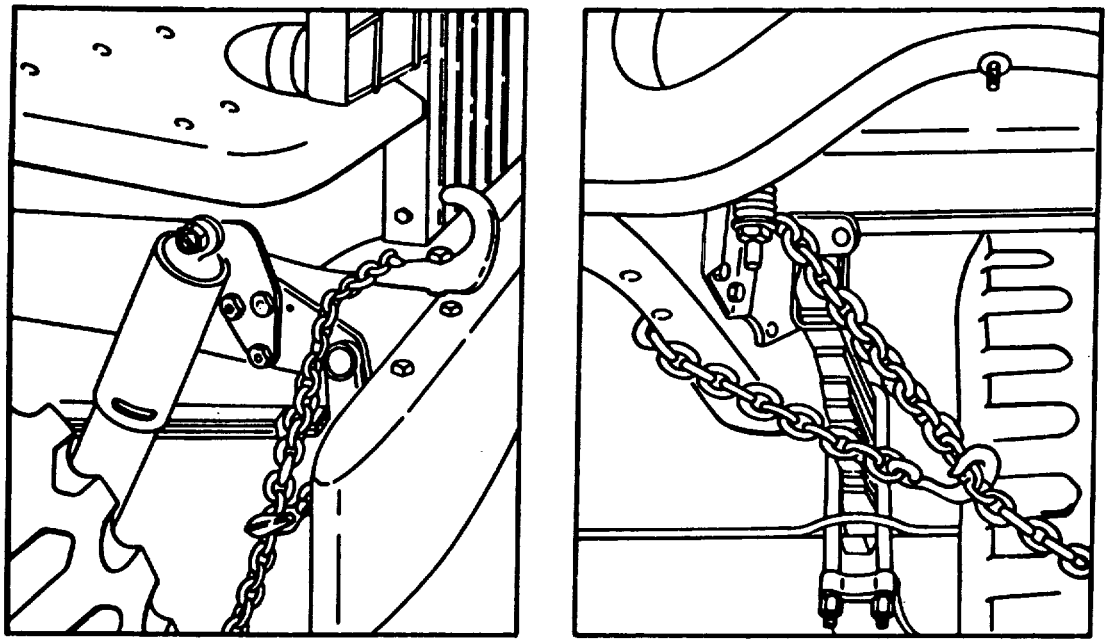

AROUND FRAME, AFT OF BUMPER

AROUND FRAME

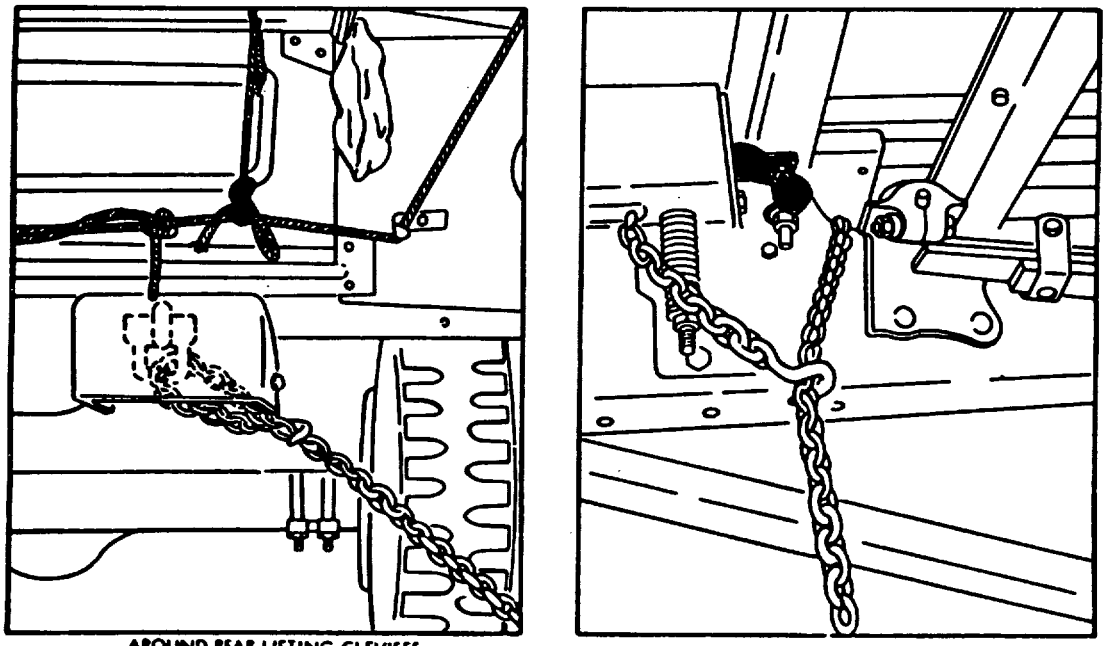

AROUND REAR LIFTING CLEVISES

OVER FRAME AND UNDER CROSS MEMBER

FIGURE 19. Vehicle tiedown points.

Source: https://assist.dla.mil -- Downloaded: 2016-12-11T01:38Z
Check the source to verify that this is the current version before use.

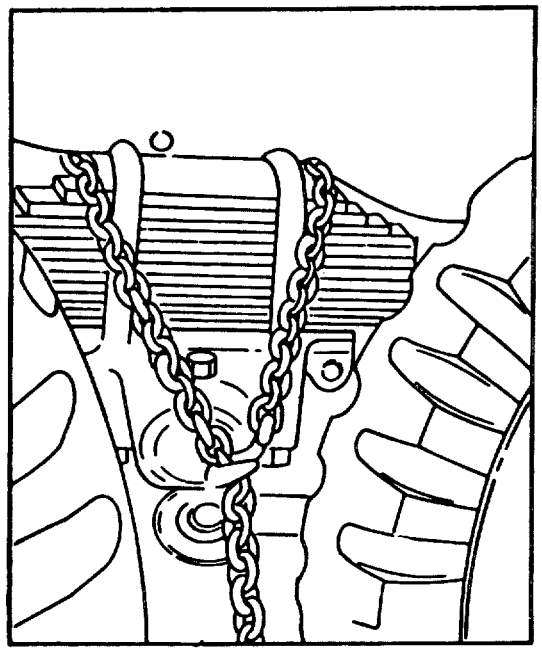

AROUND EQUALIZER TRUNNION BAR AND OVER SPRING

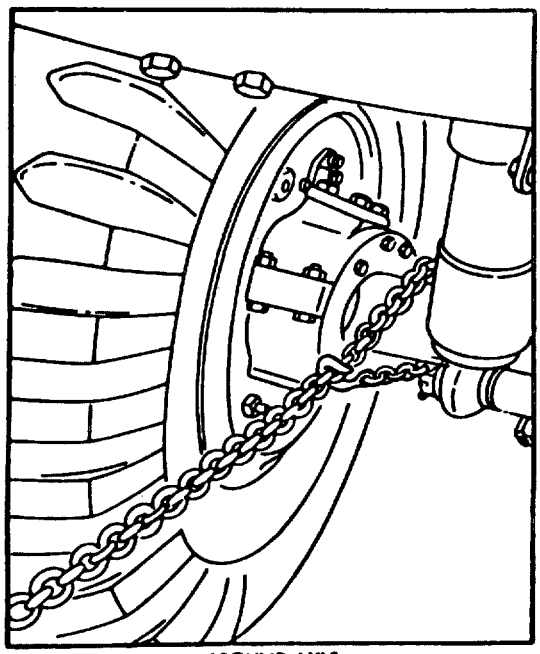

AROUND AXLE

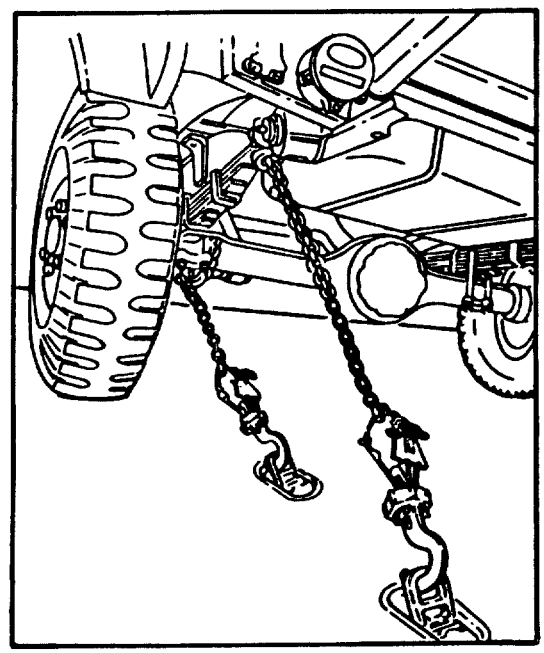

M8-1 TIEDOWNS ATTACHED TO FLOOR FITTINGS

FIGURE 19. Vehicle tiedown points. (continued)

Source: https://assist.dla.mil -- Downloaded: 2016-12-11T01:38Z
Check the source to verify that this is the current version before use.

CGU-1/B TIEDOWN DEVICE, 2268 kg (5000 lbs)

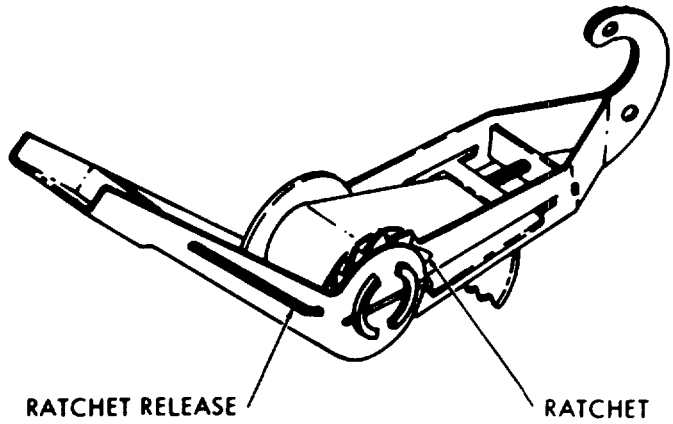

TYPE CGU-1/B
TIEDOWN DEVICE

THE TYPE CGU-1/B TIEDOWN DEVICE IS USED TO TIEDOWN LIGHT WEIGHT CARGO UNITS.

FIGURE 20. CGU-1/B tiedown device.

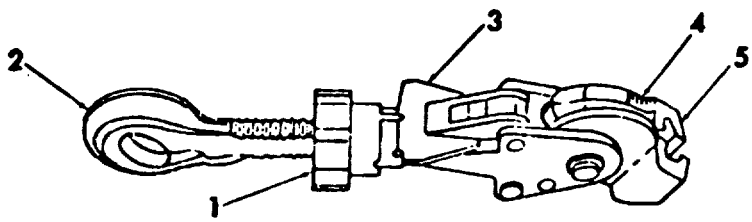

MB-1 OR MB-2
TYPE II

1. TENSION GRIP
2. ADJUSTABLE HOOK
3. QUICK RELEASE LEVER
4. CHAIN LOCK
5. CHAIN POCKET

FIGURE 21. MB-1 or MB-2 tiedown device.

Source: https://assist.dla.mil -- Downloaded: 2016-12-11T01:38Z
Check the source to verify that this is the current version before use.

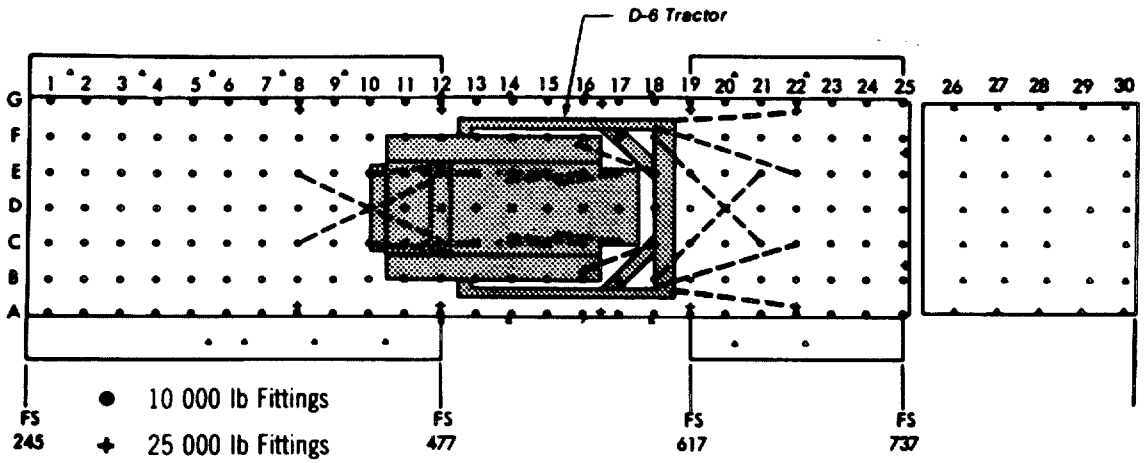

TIEDOWN INSTRUCTIONS

TIEDOWN FITTING	TIEDOWN DEVICE			ATTACH TO VEHICLE AT:
	QUANTITY	SIZE (kg)	SIZE (lb)	
8C	1	4 536	10 000	Drive Sprocket, L.H. Side
8E	1	4 536	10 000	Drive Sprocket, R.H. Side
10C	1	4 536	10 000	Drive Sprocket, R.H. Side
10E	1	4 536	10 000	Drive Sprocket, L.H. Side
13C	1	4 536	10 000	Towbar, R.H. Side
13E	1	4 536	10 000	Towbar, L.H. Side
15C	1	4 536	10 000	Bridle Around Track Body Frame, R.H. Side
15E	1	4 536	10 000	Bridle Around Track Body Frame, L.H. Side
16C	1	4 536	10 000	Top Roller Wheel Arm, R.H. Side
16E	1	4 536	10 000	Top Roller Wheel Arm, L.H. Side
17C	1	4 536	10 000	Blade Assy Plate, Rt Track
17E	1	4 536	10 000	Blade Assy Plate, Lt Track
18C	1	4 536	10 000	Guide Wheel, Rt Track
18E	1	4 536	10 000	Guide Wheel, Lt Track
21C	1	4 536	10 000	Upper Blade Support Arm, L.H. Side
21E	1	4 536	10 000	Upper Blade Support Arm, R.H. Side
22A/25	1	11 340	25 000	Upper Blade Support Arm, R.H. Side
22G/25	1	11 340	25 000	Upper Blade Support Arm, L.H. Side

FIGURE 22. Tiedown pattern.

Source: https://assist.dla.mil -- Downloaded: 2016-12-11T01:38Z
Check the source to verify that this is the current version before use.

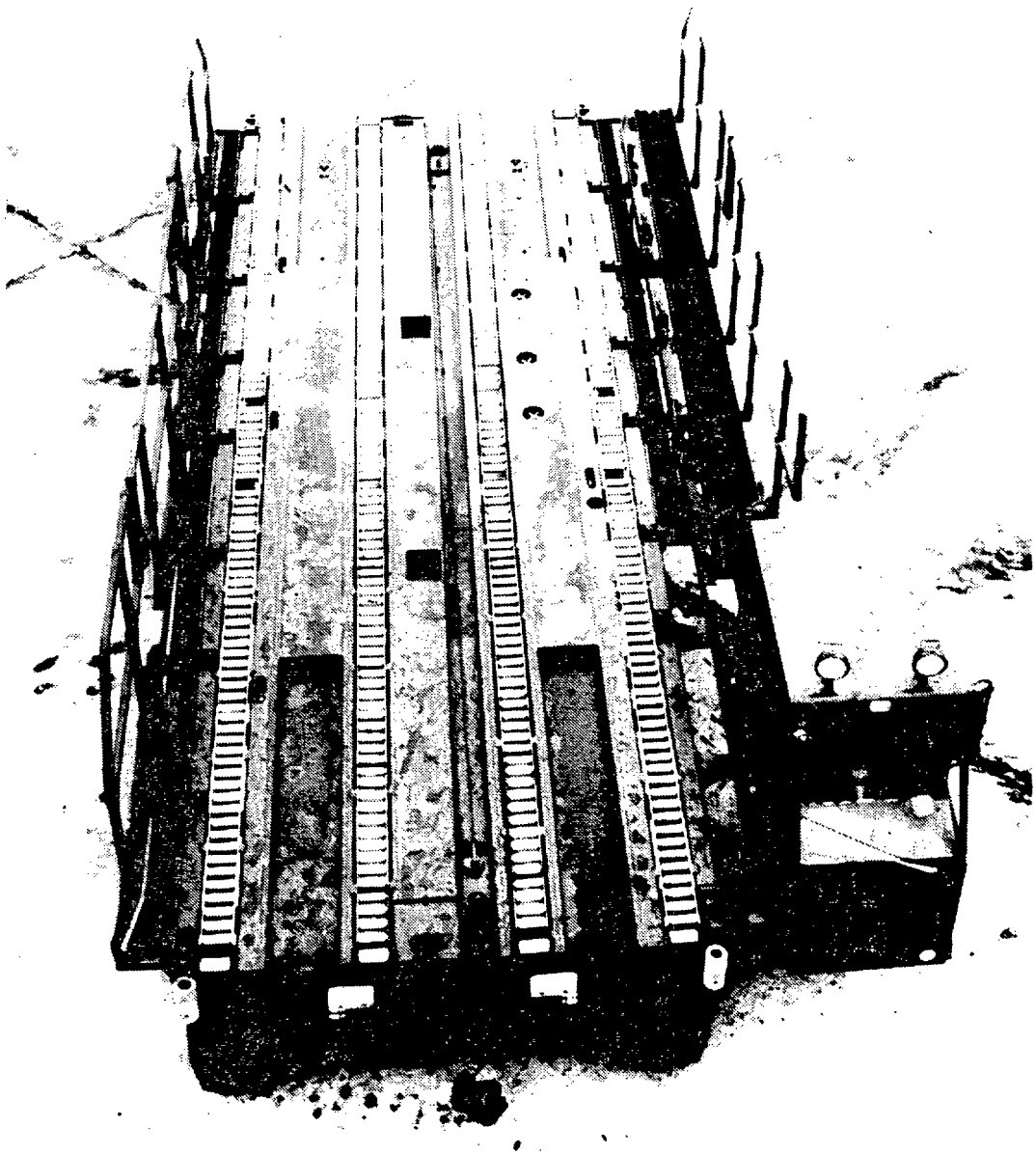

FIGURE 23. TAC loader.

Source: https://assist.dla.mil -- Downloaded: 2016-12-11T01:38Z
Check the source to verify that this is the current version before use.

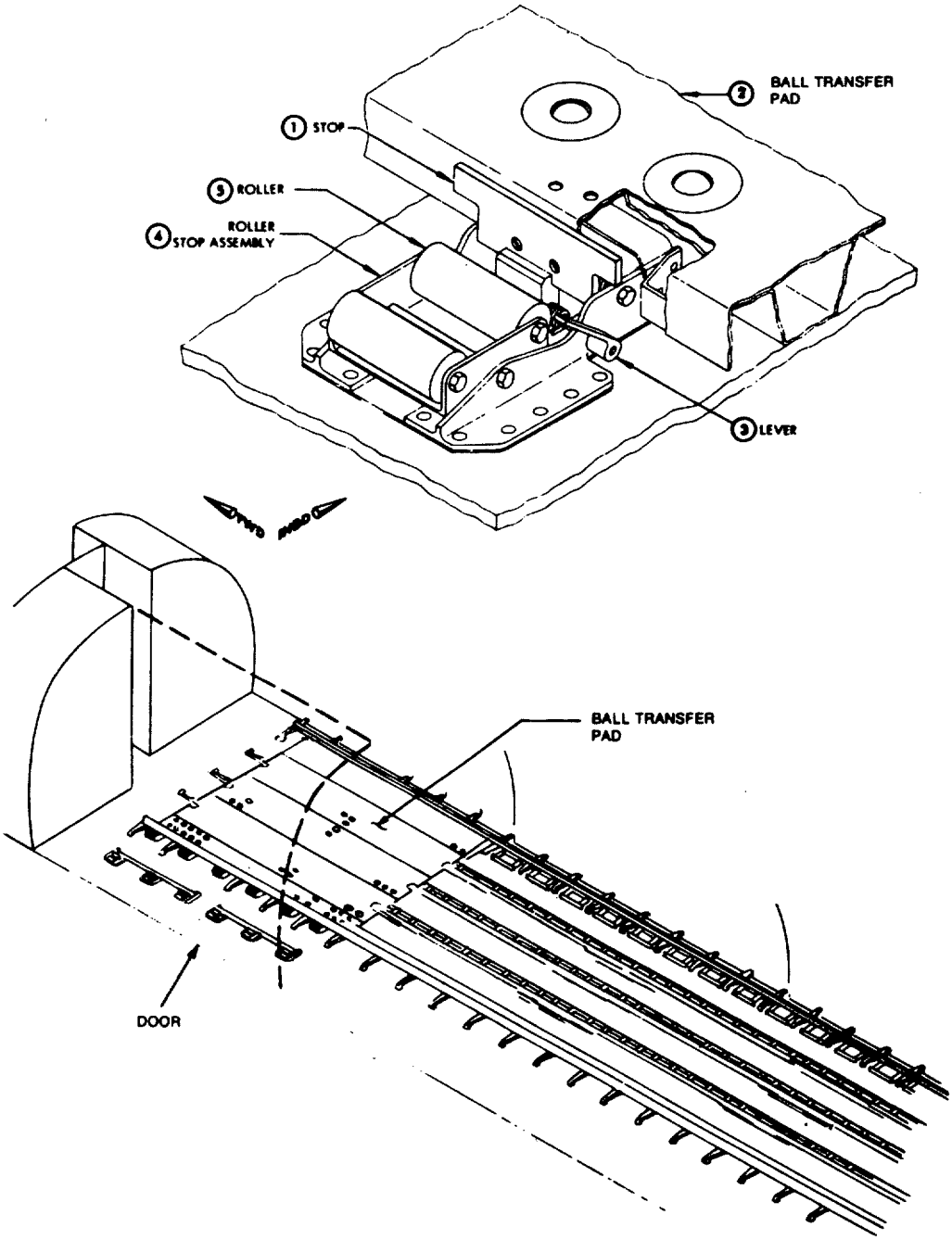

FIGURE 24. Ball transfer pad.

Source: https://assist.dla.mil -- Downloaded: 2016-12-11T01:38Z
Check the source to verify that this is the current version before use.

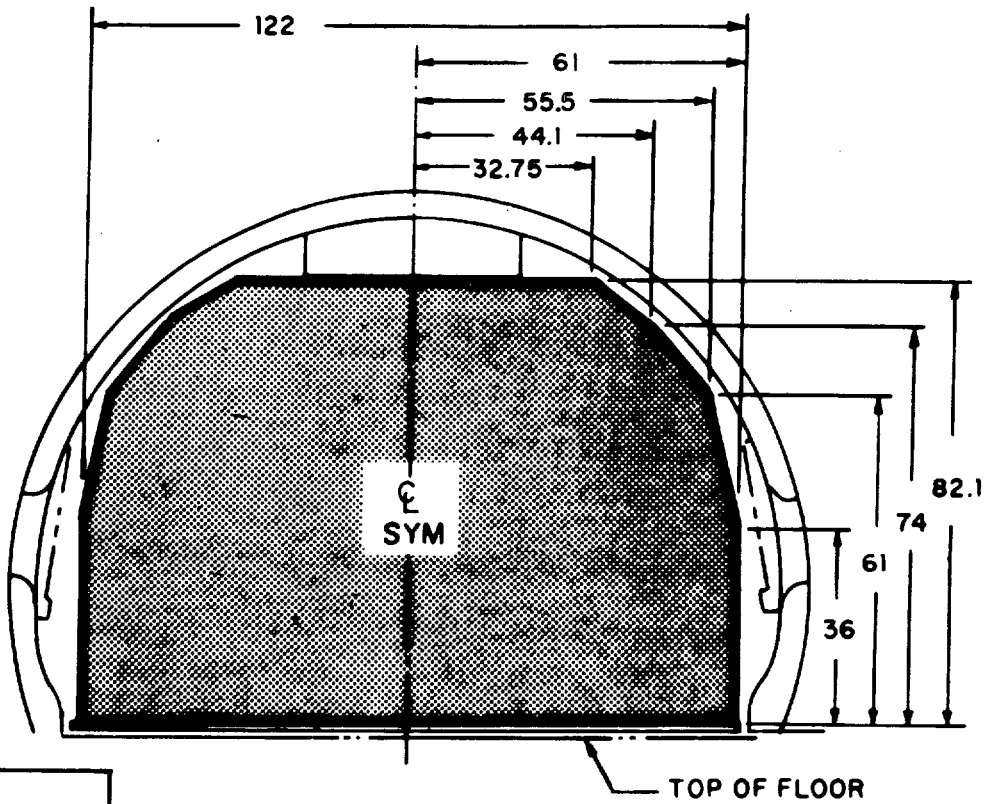

VIEW LOOKING FORWARD

METRIC EQUIVALENTS	
INCHES	METERS
32.75	0.83
36.0	0.91
44.1	1.12
55.5	1.41
61.0	1.55
82.1	2.09
122.0	3.1

NOTE: ALL DIMENSIONS ARE SHOWN IN INCHES

FIGURE 25. Loading profile for typical commercial system.

Source: https://assist.dla.mil -- Downloaded: 2016-12-11T01:38Z
Check the source to verify that this is the current version before use.

METRIC EQUIVALENTS	
IN.	MM
1/32	0.8
1/8	3.2
15/32	11.9
1.0	25.4
1 1/8	28.6
1 1/4	31.8
2.115	53.7
2 1/4	57.2
4 1/2	114.3
54	1372.0
88	2235.0

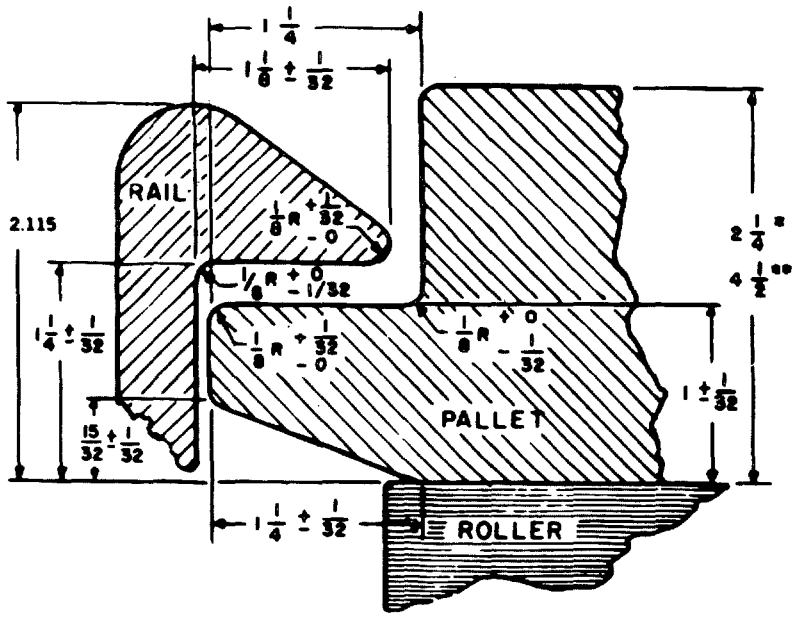

* The standard HCU-6/E pallet is 57.2 mm (2 1/4 in.) thick.
** The 114.3 mm (4 1/2 in.) dimension applies only to type HCU-10/E pallet 1372 × 2235 × 114.3 mm thick (54 × 88 × 4 1/2 in. thick). Forklift entries are provided on the long side of the pallet.

FIGURE 26. Rail and pallet mating.

Source: https://assist.dla.mil -- Downloaded: 2016-12-11T01:38Z
Check the source to verify that this is the current version before use.

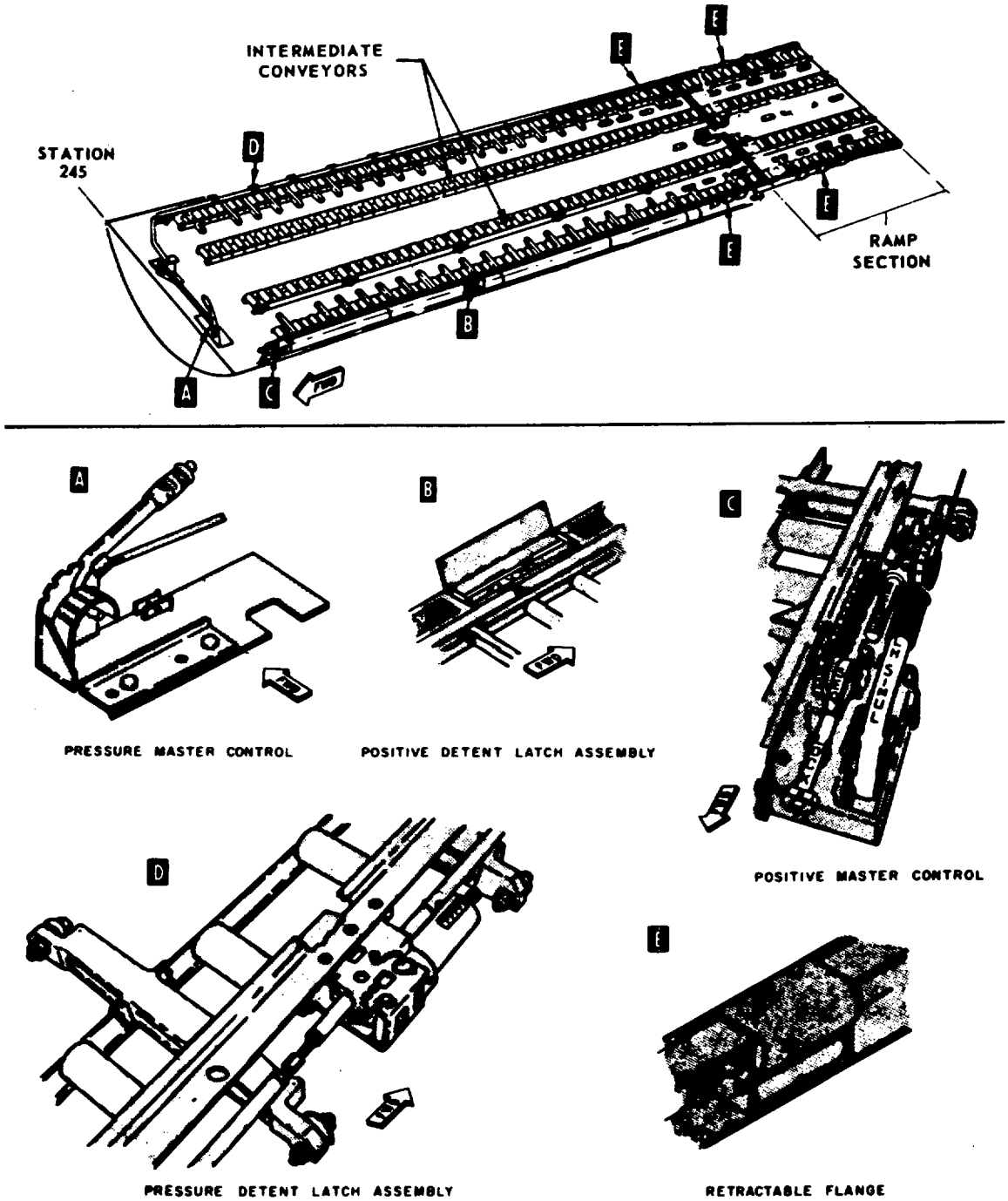

FIGURE 27. Rail system for C-130 (AA32H-4 with automatic restraint controls).

Source: https://assist.dla.mil -- Downloaded: 2016-12-11T01:38Z
Check the source to verify that this is the current version before use.

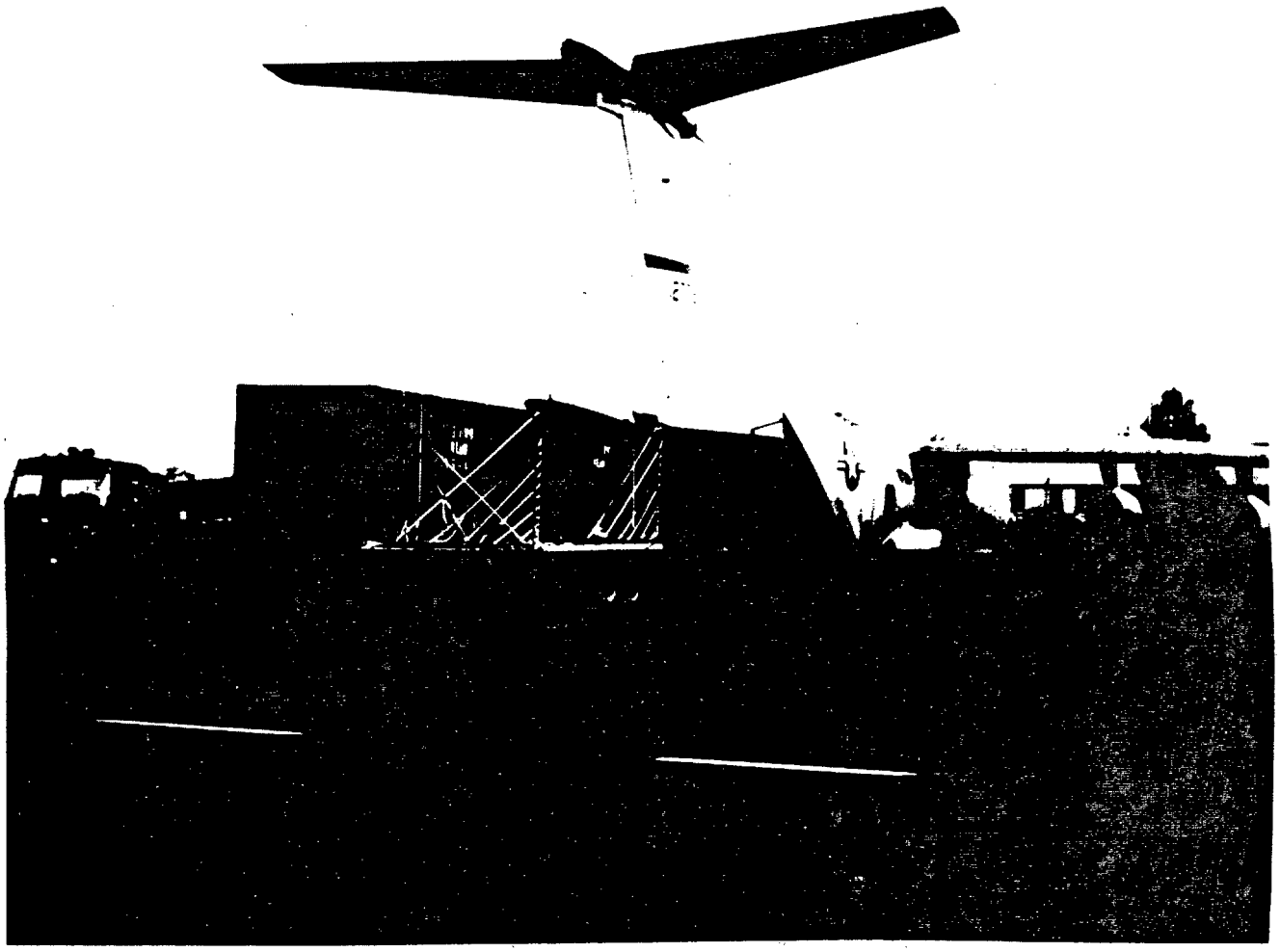

FIGURE 28. Flatbed truck roller loading.

Source: https://assist.dla.mil -- Downloaded: 2016-12-11T01:38Z
Check the source to verify that this is the current version before use.

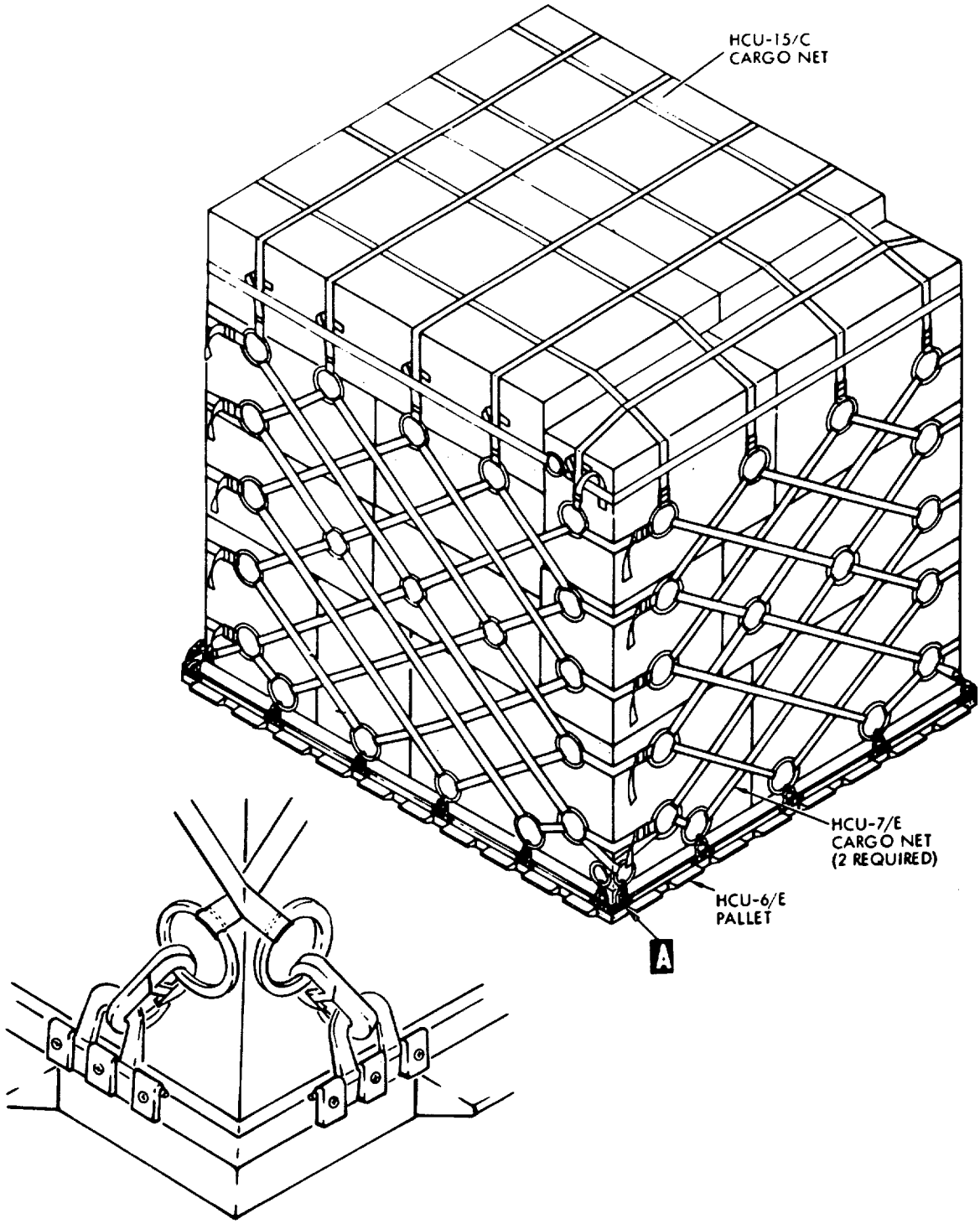

FIGURE 29. HCU-6/E pallet.

Source: https://assist.dla.mil -- Downloaded: 2016-12-11T01:38Z
Check the source to verify that this is the current version before use.

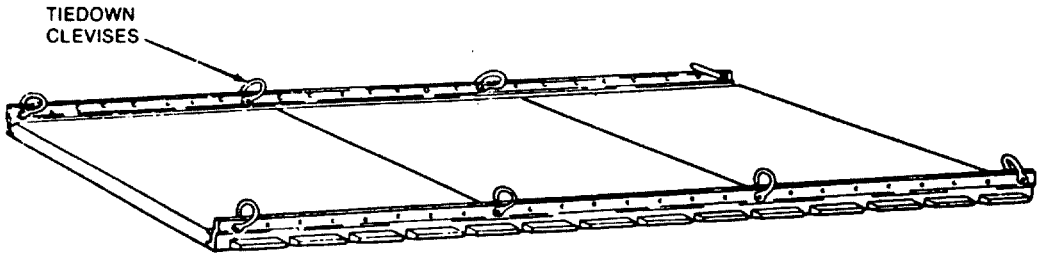

TYPE II MODULAR PLATFORM

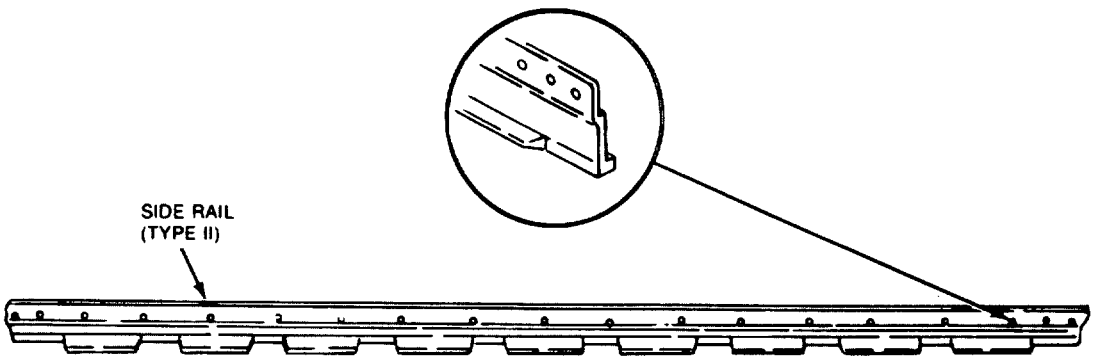

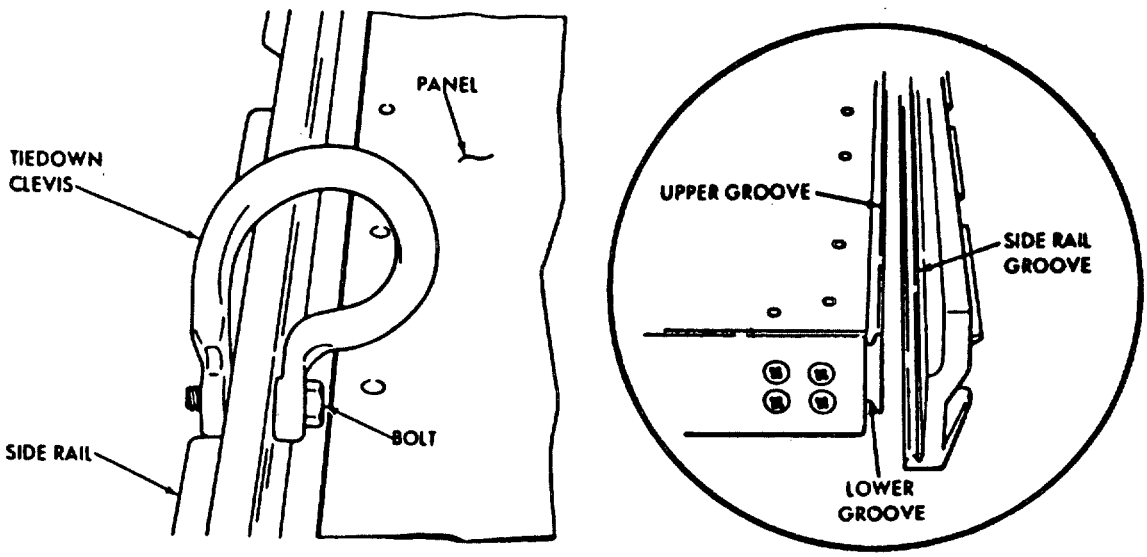

TIEDOWN CLEVISES ON SIDE RAIL

FIGURE 30. Type II modular platform.

Source: https://assist.dla.mil -- Downloaded: 2016-12-11T01:38Z
Check the source to verify that this is the current version before use.

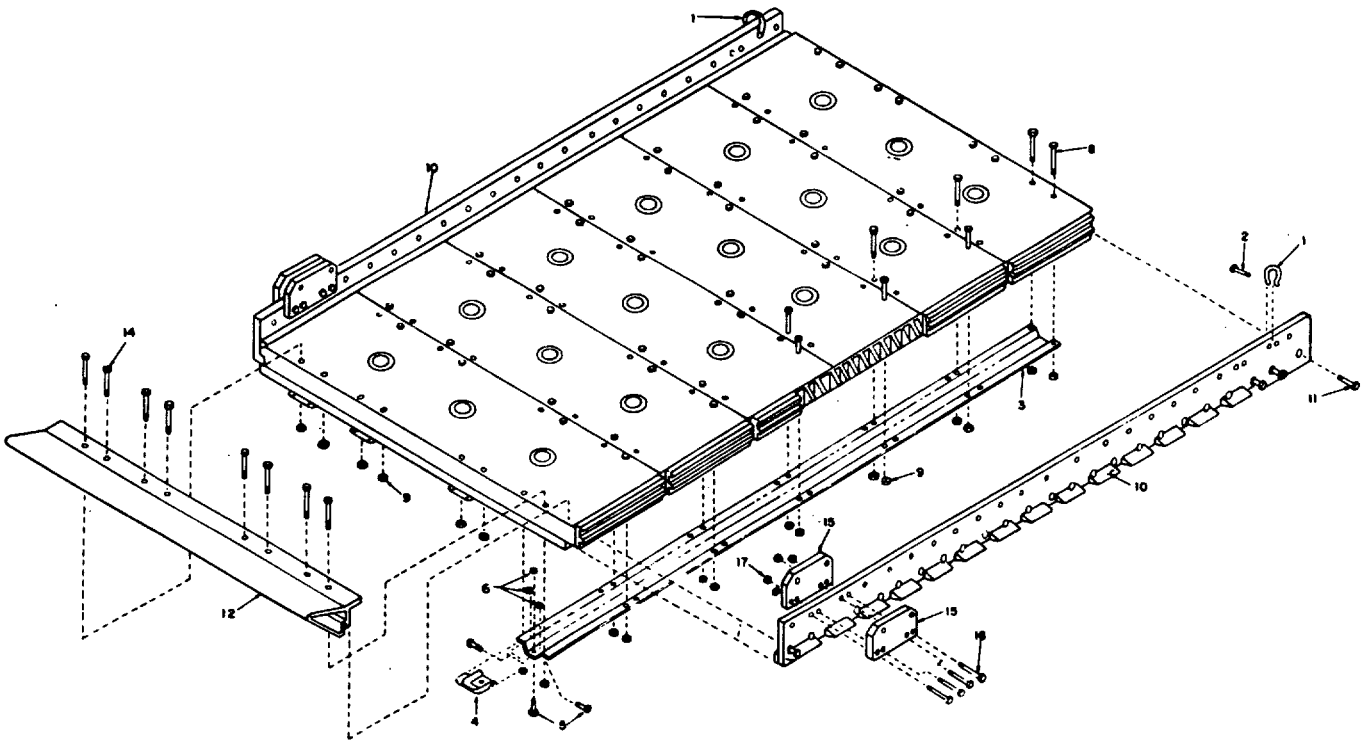

FIGURE 31. A/E29H-1 (LAPES) platform.

Source: https://assist.dla.mil -- Downloaded: 2016-12-11T01:38Z
Check the source to verify that this is the current version before use.

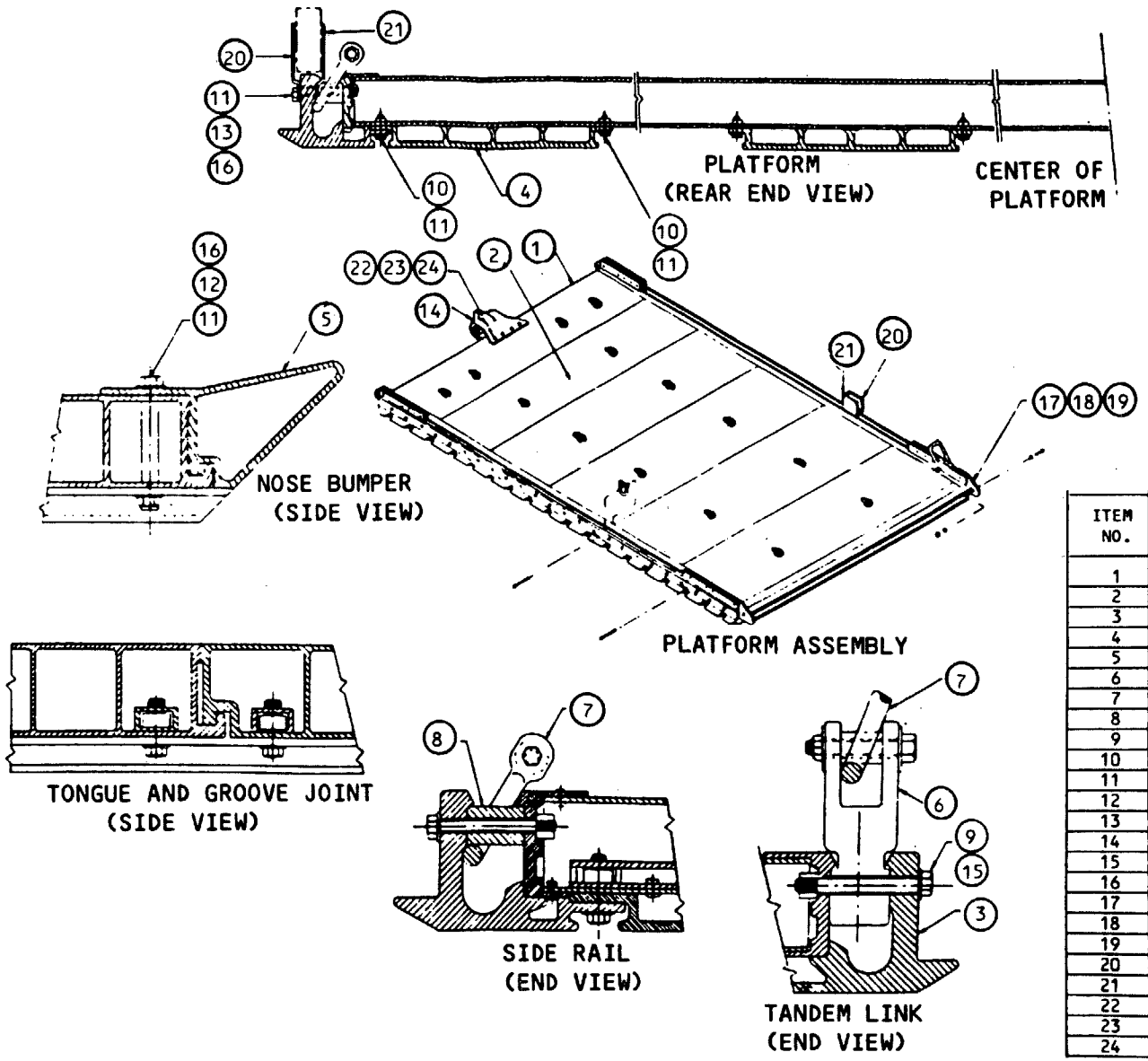

ITEM NO.	ITEM
1	PANEL ASSEMBLY, REAR
2	PANEL ASSEMBLY
3	SIDE RAIL
4	ROLLER PAD
5	NOSE BUMPER
6	TANDEM LINK ASSEMBLY
7	CLEVIS ASSEMBLY, SIDE RAIL
8	BUSHING, SIDE RAIL
9	BOLT, SIDE RAIL
10	BOLT, ROLLER PAD SIDE RAIL
11	WASHER, FLAT
12	BOLT, NOSE BUMPER
13	BOLT, BRACKET, EFTA
14	EXTRACTION, BRACKET ASSEMBLY
15	WASHER, FLAT SIDE RAIL
16	NUT, NOSE BUMPER/EFTA BRACKET
17	BOLT, CONNECTOR LINK
18	NUT, CONNECTOR LINK
19	WASHER, CONNECTOR LINK
20	BRACKET, OUTSIDE EFTA
21	BRACKET, INSIDE EFTA
22	BOLT, EXTRACTION BRACKET
23	NUT, EXTRACTION BRACKET
24	WASHER, FLAT, EXTRACTION BKT

FIGURE 32. Components of Type V airdrop platform.

Source: https://assist.dla.mil -- Downloaded: 2016-12-11T01:38Z
Check the source to verify that this is the current version before use.

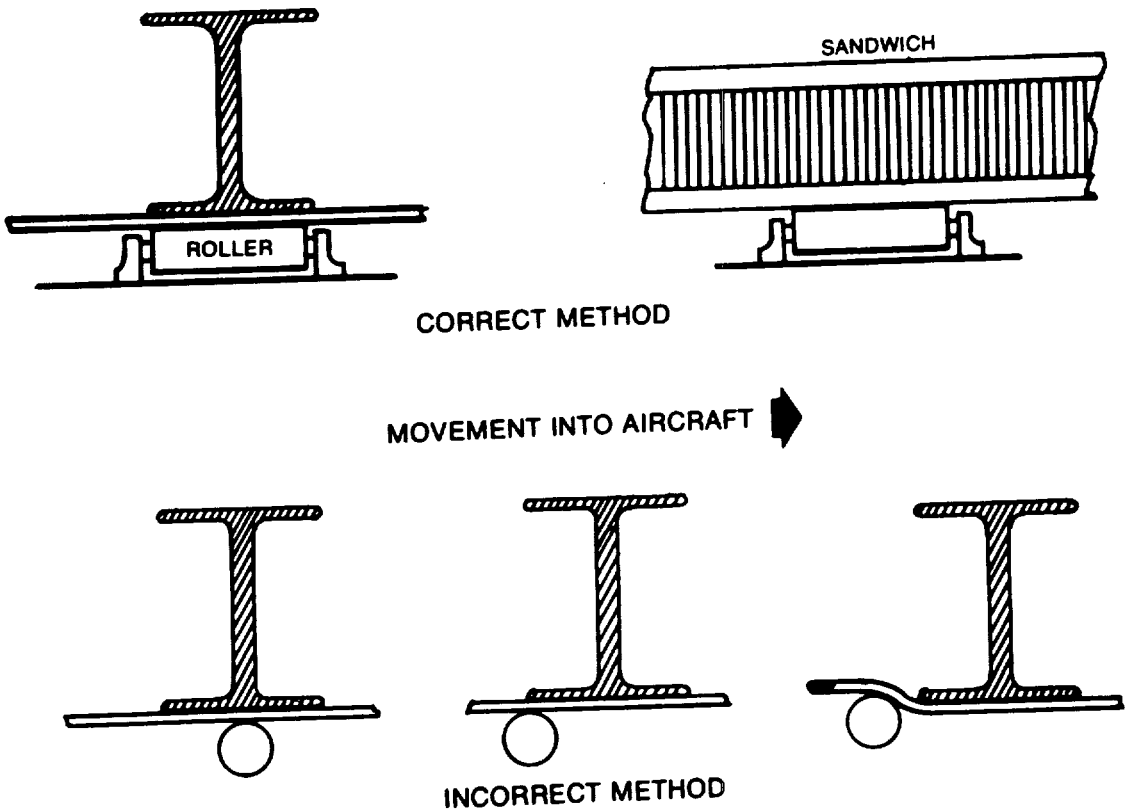

FIGURE 33. Longitudinal rigidity.

Source: https://assist.dla.mil -- Downloaded: 2016-12-11T01:38Z
Check the source to verify that this is the current version before use.

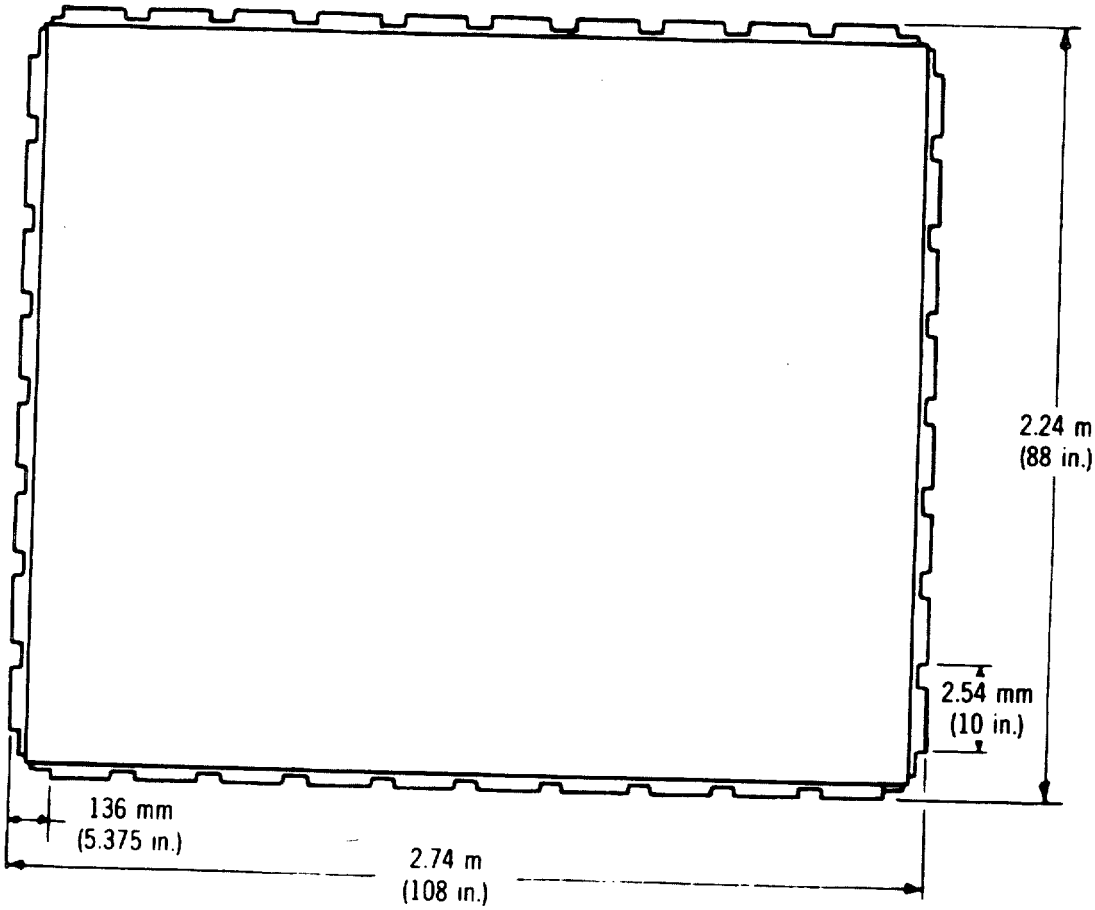

Plan view of 4536 kg (10 0001b) capacity pallet (HCU-6/E)

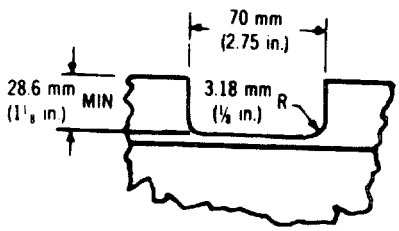

Detail of Pallet Indent

FIGURE 34. 4536 kg (10,000 lb) pallet.

Source: https://assist.dla.mil -- Downloaded: 2016-12-11T01:38Z
Check the source to verify that this is the current version before use.

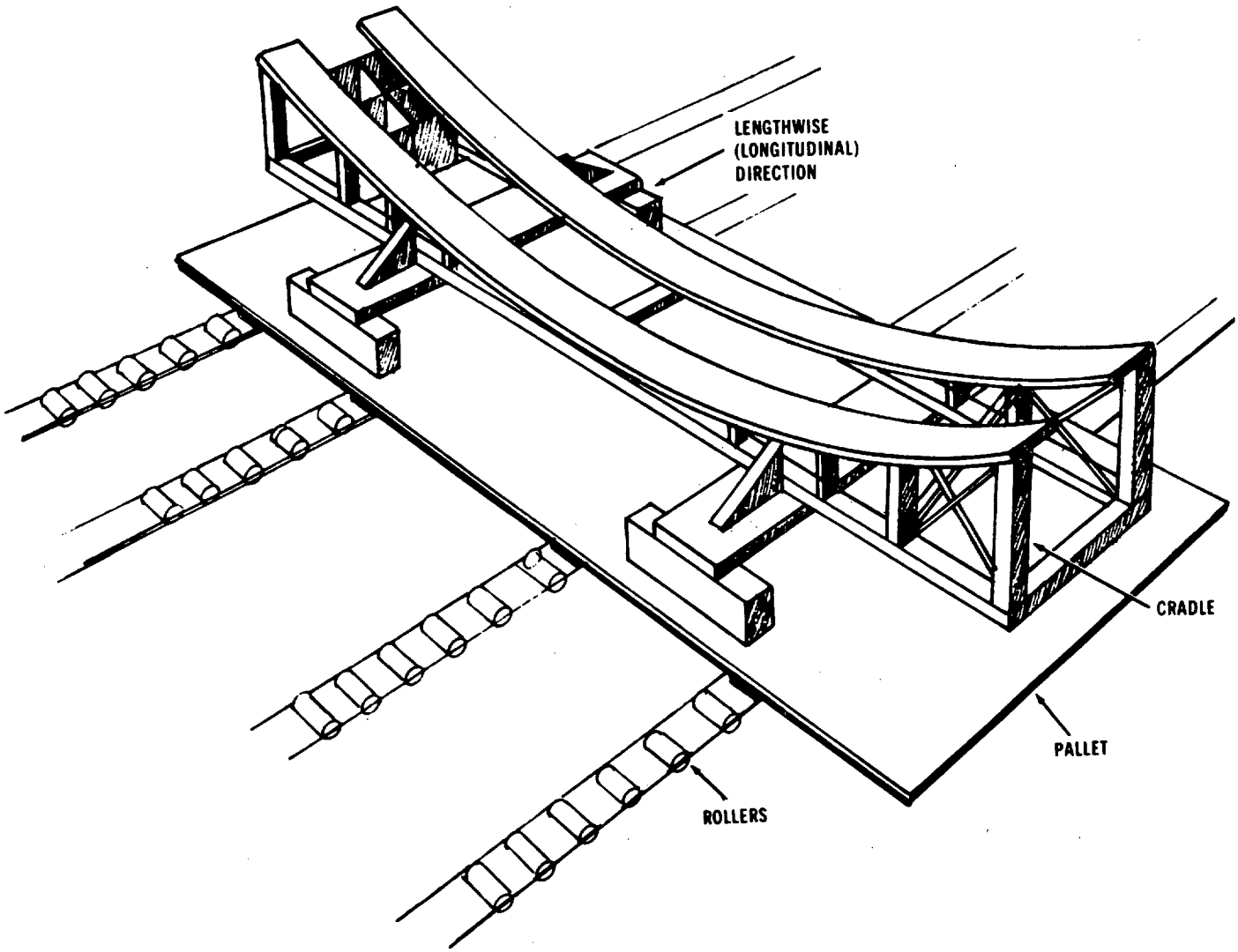

FIGURE 35. Cradle.

Source: https://assist.dla.mil -- Downloaded: 2016-12-11T01:38Z
Check the source to verify that this is the current version before use.

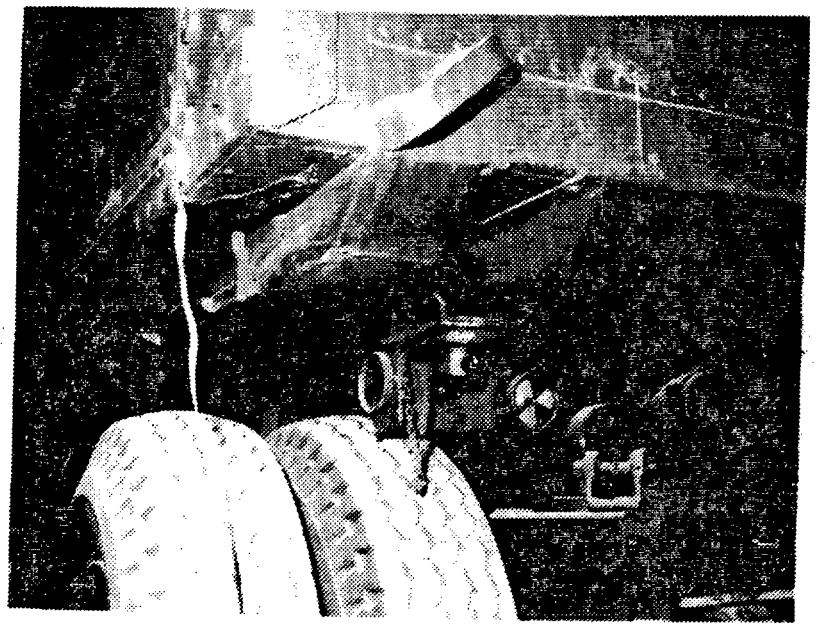

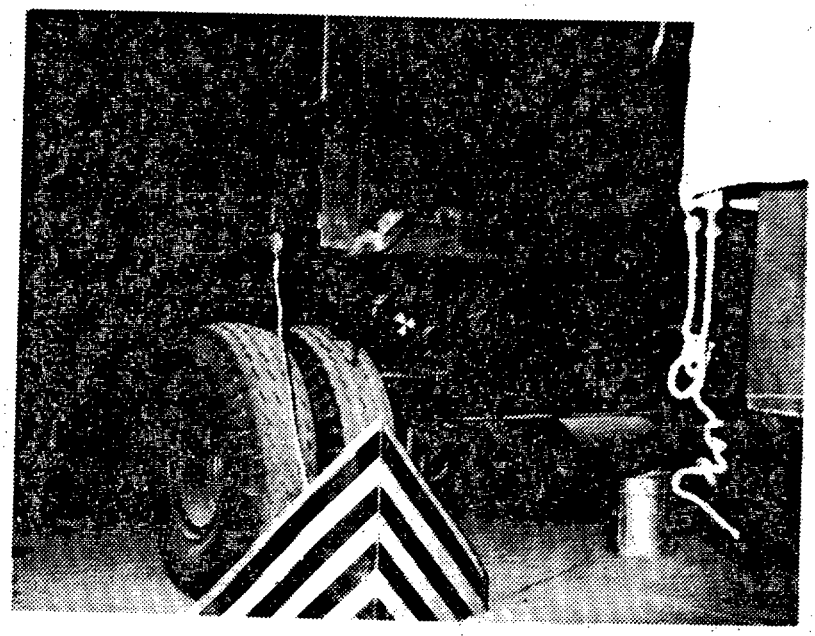

FIGURE 36. Hat section base.

Source: https://assist.dla.mil -- Downloaded: 2016-12-11T01:38Z
Check the source to verify that this is the current version before use.

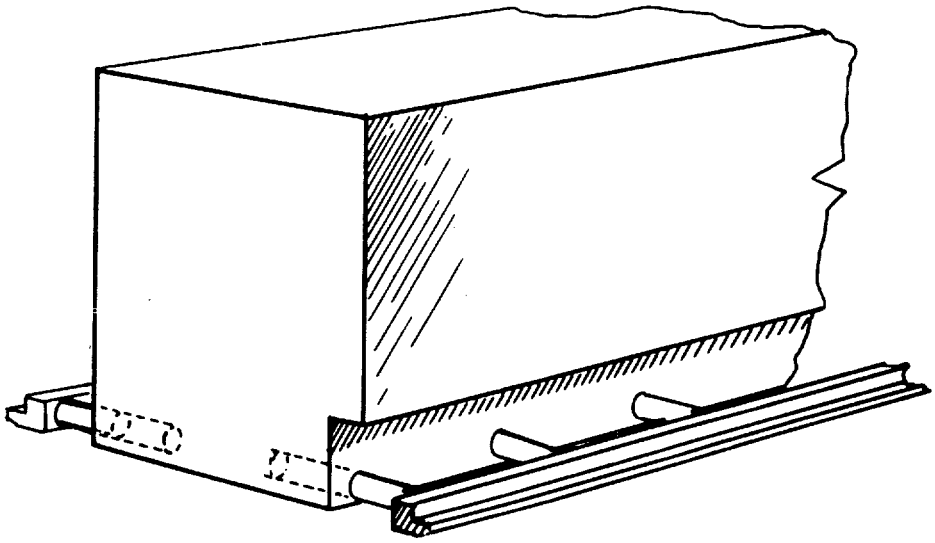

Possible Design for Pop-Out System

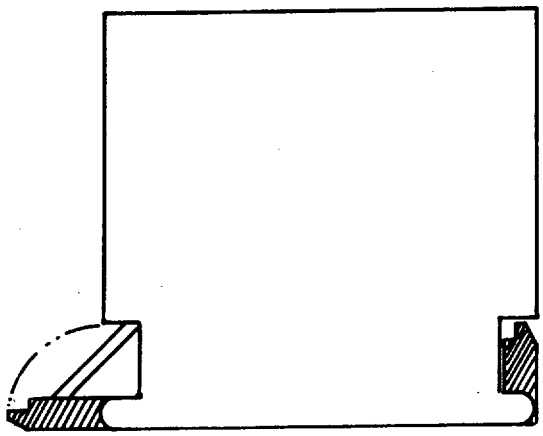

Fold Up System

FIGURE 37. Shelter/van base design.

Source: https://assist.dla.mil -- Downloaded: 2016-12-11T01:38Z
Check the source to verify that this is the current version before use.

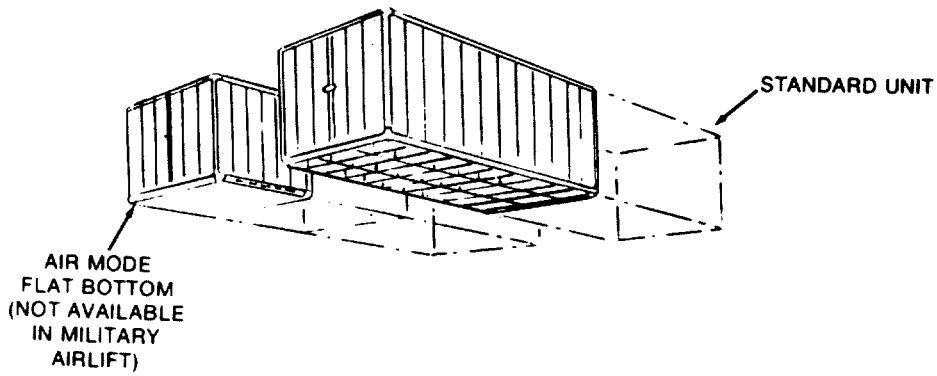

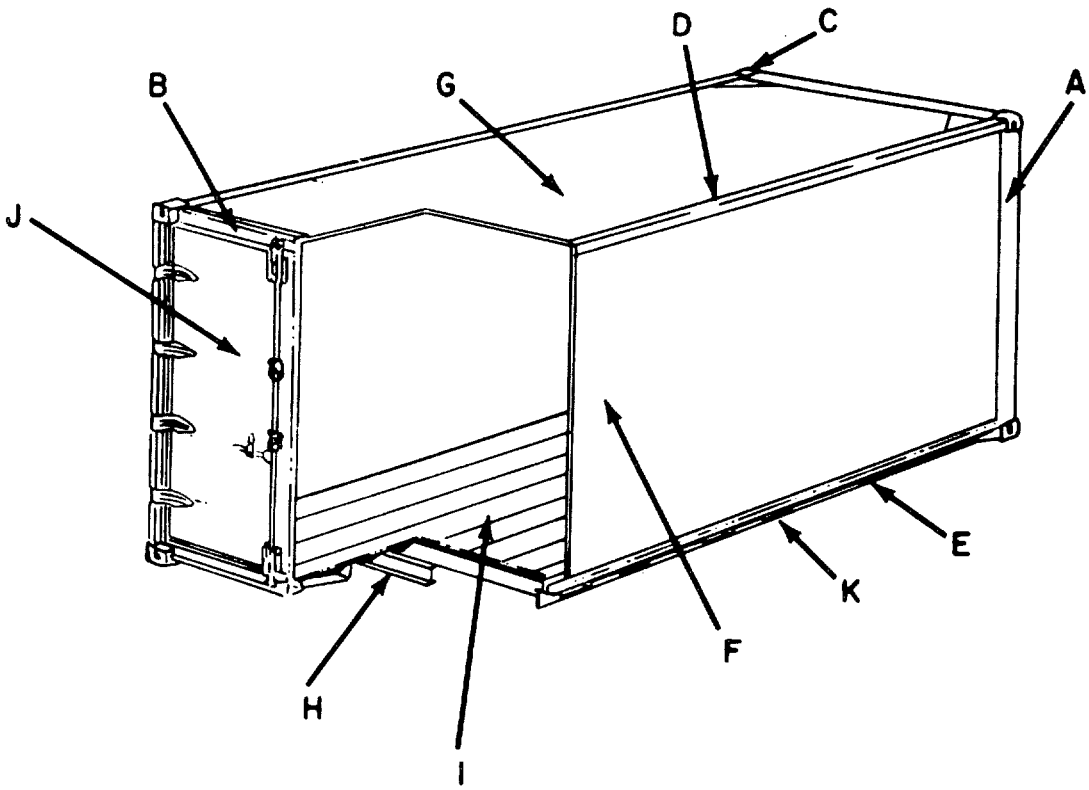

NOTE: Refer to text for explanation of letters.

FIGURE 38. Container structural features.

Source: https://assist.dla.mil -- Downloaded: 2016-12-11T01:38Z
Check the source to verify that this is the current version before use.

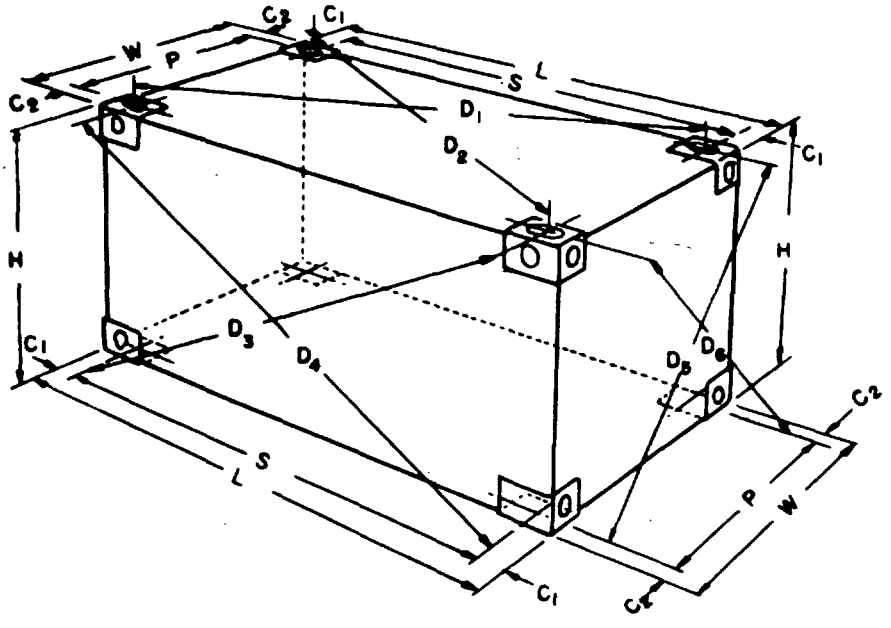

S = Length between centers of apertures in corner fittings
P = Width between centers of apertures in corner fittings
C_1 = Corner fitting measurement $4^{+9}_{-1}/_{16}$ inches ($101.5^{+0}_{-1.5}$ mm)
C_2 = Corner fitting measurement $3\frac{1}{2}^{+9}_{-1}/_{16}$ inches ($89^{+0}_{-1.5}$ mm)
L = External length of container
W = External width of container
D = Distance between centers of apertures of diagonally opposite corner fittings resulting in 6 measurements, D_1, D_2, D_3, D_4, D_5 and D_6
K_1 = Difference between D_1 and D_2 or between D_3 and D_4; i.e., $K_1 = D_1 - D_2$ or $K_1 = D_2 - D_1$ or $K_1 = D_3 - D_4$ or $K_1 = D_4 - D_3$
K_2 = Difference between D_5 and D_6; i.e., $K_2 = D_6 - D_5$ or $D_5 - D_6$
H = Overall height

Nominal Length Feet	Length Overall(L)		S		P		K_1 Max.		K_2 Max.	
	mm	Ft. In.	mm	Ft In.	mm	Ft. In.	mm	In.	mm	In.
40	12190^{+3}_{-6}	40 $0^{-9}_{-3/16}$	11985	39 3-7/8	2259	7 4-31/32	19	3/4	10	3/8
30	9125^{+9}_{-16}	29 $11\text{-}1/4^{+9}_{-3/8}$	8918	29 3-1/8	2259	7 4-31/32	16	5/8	10	3/8
20	6055^{+3}_{-5}	19 $10\text{-}1/2^{+9}_{-1/4}$	5853	19 2-7/16	2259	7 4-31/32	13	1/2	10	3/8
10	2990^{+1}_{-4}	9 $9\text{-}3/4^{+9}_{-3/16}$	2787	9 1-23/32	2259	7 4-31/32	10	3/8	10	3/8

Width Overall (W): 8 Ft. $0^{+9}_{-3/16}$ in., 2435^{+3}_{-5} mm

Height Overall (H): 8 Ft. $0^{+9}_{-3/16}$ in., 2435^{+3}_{-5} mm or 8 Ft. $6\text{-}1/2^{+9}_{-3/4}$ in., 2600^{+3}_{-16} mm

NOTE: Dimensions S and P are reference dimensions only. The tolerance to be applied to S and P are governed by the tolerances shown for the overall length (L) and overall width (W)

FIGURE 39. Assembled corner fitting.

Source: https://assist.dla.mil -- Downloaded: 2016-12-11T01:38Z
Check the source to verify that this is the current version before use.

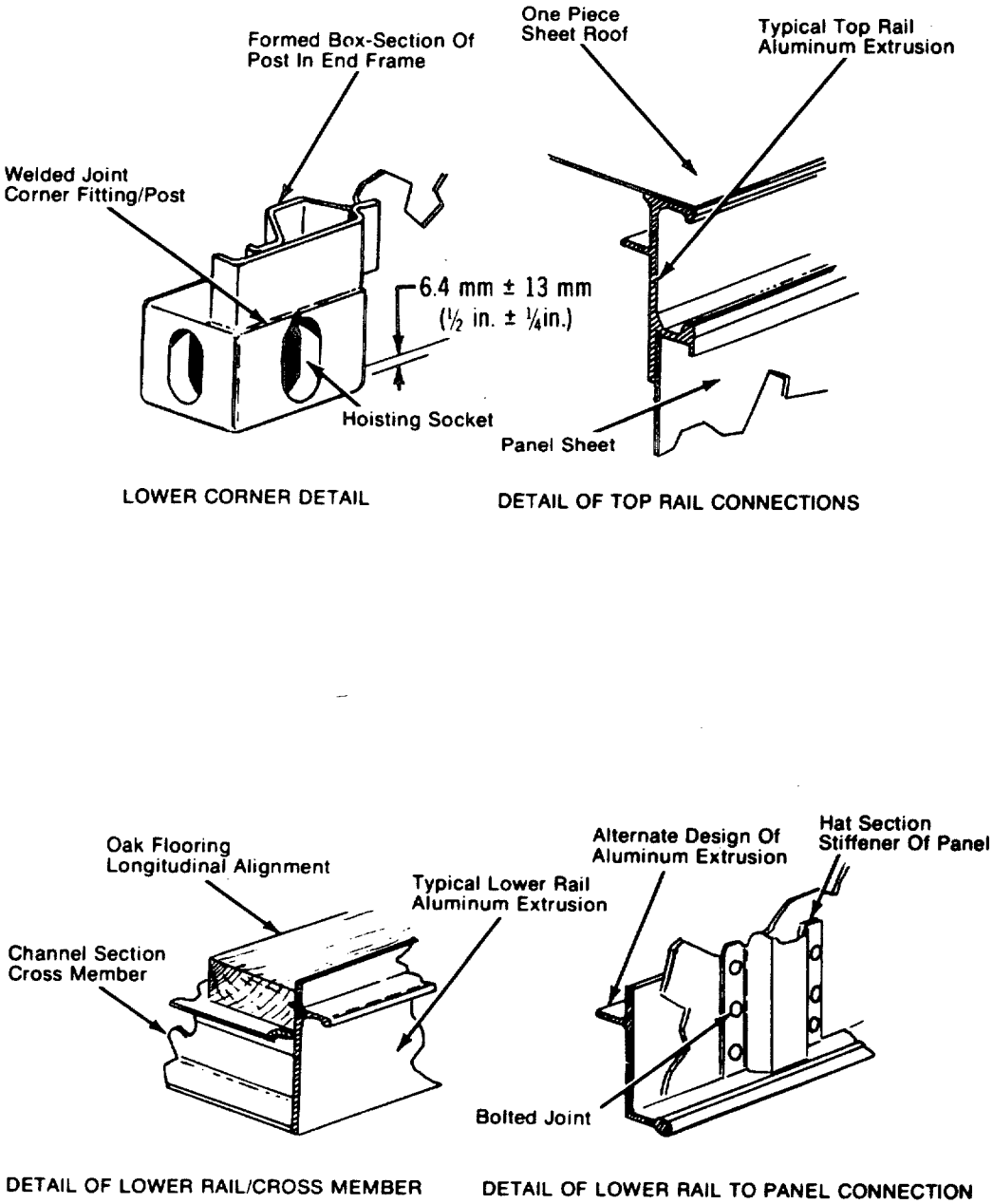

FIGURE 40. Container design details.

Source: https://assist.dla.mil -- Downloaded: 2016-12-11T01:38Z
Check the source to verify that this is the current version before use.

C-130A

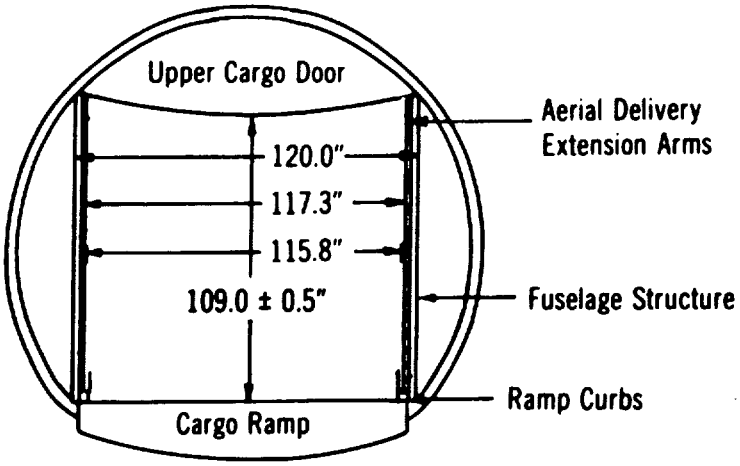

Entrance with Ramp Horizontal

Fuselage Station 737

METRIC EQUIVALENTS	
INCHES	METERS
12.0	0.305
108.0	2.74
108.2	2.75
109.0 ±0.5	2.77 ±13 mm
115.0	2.92
117.3	2.98
119.0	3.02
120.0	3.05

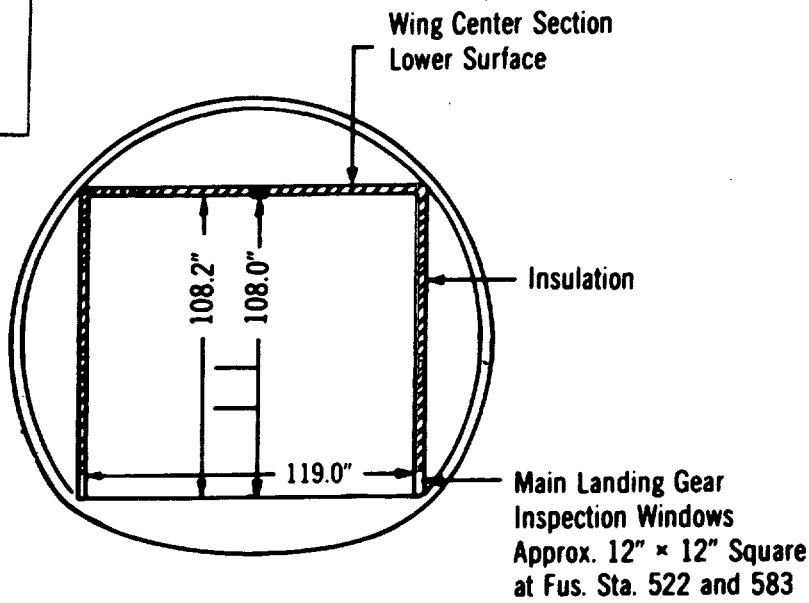

Area between Wheel Wells

Fuselage Stations 477 to 617

FIGURE 41. Compartment cross section.

Source: https://assist.dla.mil -- Downloaded: 2016-12-11T01:38Z
Check the source to verify that this is the current version before use.

C-130

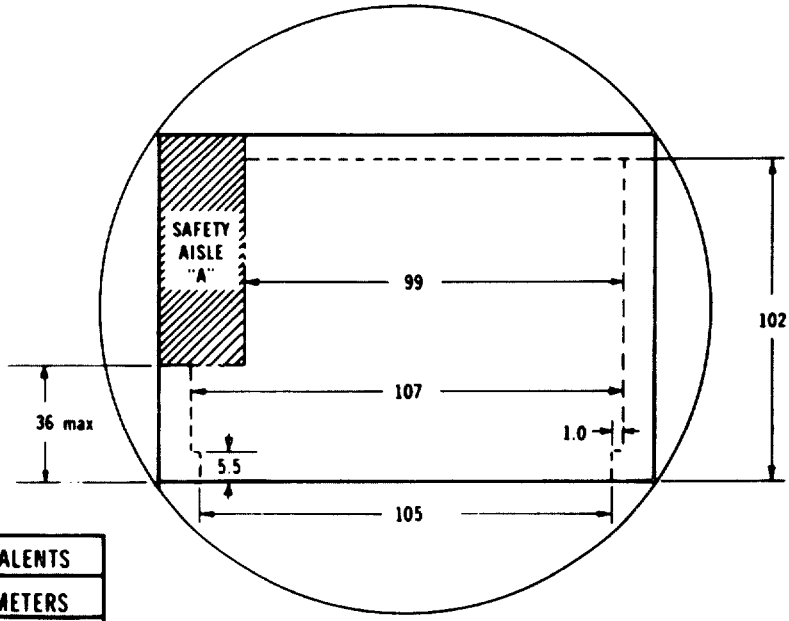

METRIC EQUIVALENTS	
INCHES	METERS
1.0	0.025
5.5	0.140
36.0	0.914
83.0	2.11
99.0	2.52
102.0	2.59
105.0	2.67
107.0	2.72
486.0	12.34

DIMENSIONS GIVEN IN INCHES

SAFETY AISLE OPTIONS

A. SIDE AISLE 0.355 by 1.83 m (14 by 72 in.) min
B. TOP AISLE 0.762 by 1.22 m (30 by 48 in.) min

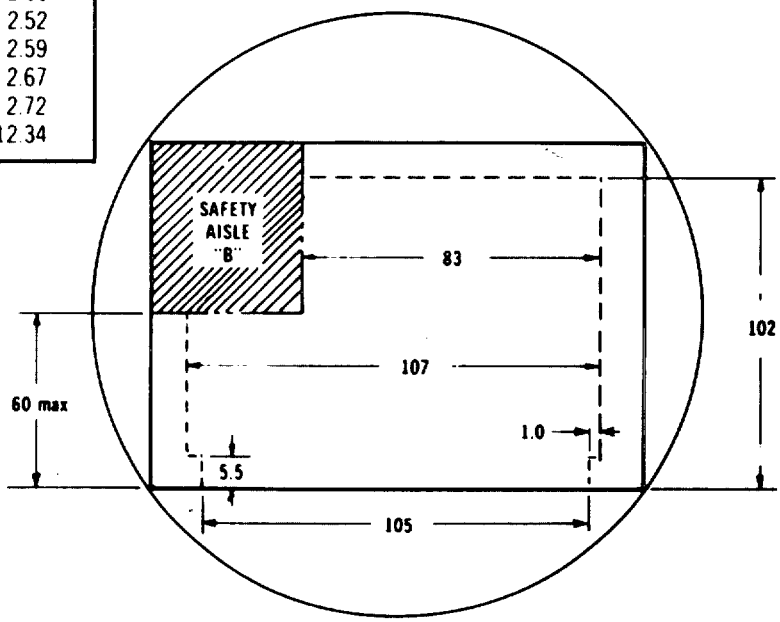

Design length 486 inches

VIEWS LOOKING FORWARD
INTO AIRCRAFT

NOTE: For vehicles with tracks or non-sensitive steering, 6 inches of rolling shoring is required when the clearances between the side rails and the vehicle is critical. Vehicles with clearances of less than 2 1/2 inches on each side require ATTLA review and approval.

FIGURE 42. Dimensional design limits.

Source: https://assist.dla.mil -- Downloaded: 2016-12-11T01:38Z
Check the source to verify that this is the current version before use.

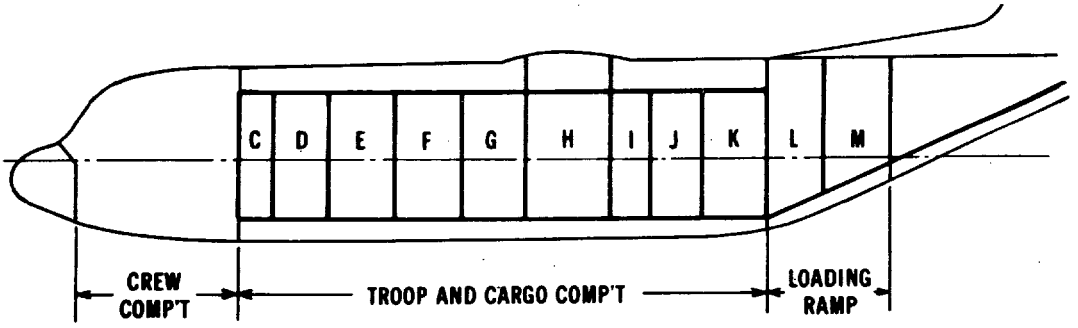

GENERAL

1	Fuselage Station		245	281	337	401	457	517	597	627	682	737	803	869
2	Compartments		C	D	E	F	G	H	I	J	K	L	M	
3	Floor Area (approx)	Sq Ft	31	48	55	48	51	68	26	47	47	56	56	
4	Usable Volume	Cu Ft	280	430	495	430	460	610	235	420	420	450	280	

FLIGHT LIMITS

1	Maximum Individual Compartment Capacity		lb	8400	12 900	19 500	28 000	30 000	40 000	15 000	24 400	12 700	2500	2500
2	BULK CARGO	Concentrated Loads — All Areas 3	PSI	50	50	50	50	50	50	50	50	50	50	50
		Running Load Per Treadway 1	PSI lb/lin ft	3.4 1400	3.4 1400	7.2 3000	7.2 3000	7.2 3000	7.2 3000	7.2 3000	7.2 3000	3.4 1400	1.2 500	1.2 500
2		Running Load Between Treadways 1	PSI lb/lin ft	3.1 1400	3.1 1400	3.1 1600	3.1 1600	3.1 1600	3.1 1600	3.1 1600	3.1 1600	3.1 1400	1.3 500	1.3 500
3	WHEELED CARGO	PNEUMATIC TIRES — 100 PSI MAX. TIRE PRESSURE — FOUR FEET MIN. DISTANCE BETWEEN AXLES 4												
		AXLE LOAD: Treadways	lb	6000	6000	13 000	13 000	13 000	13 000	13 000	13 000	6000	2500	2500
		AXLE LOAD: Between Treadways	lb	5000	5000	5000	5000	5000	5000	5000	5000	5000	1200	1200
		Tongue Load Between Treadways	lb 2	2000	2000	2000	2000	2000	2000	2000	2000	2000	450	450
4	Palletized Cargo-Dual Rail (4 Section Conveyor System)		lb/lin ft	2800	2800	3200	3200	3200	3200	3200	3200	2800	1000	1000
5														
6	Palletized Cargo-Dual Rail (4 Section Conveyor System)		lb/roller	2333	2333	2667	2667	2667	2667	2667	2667	2333	833	833

LOADING AND UNLOADING LIMITS

1	Maximum Individual Compartment Capacity		lb	20 000	30 000	40 000	40 000	40 000	40 000	37 000	40 000	30 000	26 000	26 000
1	BULK CARGO	Concentrated Loads — All Areas 3	PSI	50	50	50	50	50	50	50	50	50	50	50
		Running Load Per Treadway 1	PSI lb/lin ft	7.2 3000	7.2 3000	7.2 3000	7.2 3000	7.2 3000	7.2 3000	7.2 3000	7.2 3000	7.2 3000	7.2 3000	7.2 3000
		Running Load Between Treadways 1	PSI lb/lin ft	6.7 2800	6.7 2800	6.7 2800	6.7 2800	6.7 2800	6.7 2800	6.7 2800	6.7 2800	6.7 2800	2.4 1000	2.4 1000
3	WHEELED CARGO	PNEUMATIC TIRES — 100 PSI MAX. TIRE PRESSURE — FOUR FEET MIN. DISTANCE BETWEEN AXLES 4												
		AXLE LOAD: Treadways	lb	13 000	13 000	13 000	13 000	13 000	13 000	13 000	13 000	13 000	13 000	13 000
		AXLE LOAD: Between Treadways	lb	5000	5000	5000	5000	5000	5000	5000	5000	5000	5000	5000
		Tongue Load Between Treadways	lb 2	2000	2000	2000	2000	2000	2000	2000	2000	2000	2000	2000
4	Palletized Cargo-Dual Rail (4 Section Conveyor System)		lb/lin ft	6000	6000	6000	6000	6000	6000	6000	6000	6000	6000 5	6000
5														
6	Palletized Cargo-Dual Rail (4 Section Conveyor System)		lb/roller	5000	5000	5000	5000	5000	5000	5000	5000	5000	5000	5000

FIGURE 43. Floor loading capacity--concentrated or pneumatic tire loads (AF53-3129 through 57-509; 57-525 and up; CG-1339 and up).

Source: https://assist.dla.mil -- Downloaded: 2016-12-11T01:38Z
Check the source to verify that this is the current version before use.

NOTE:

1 Treadway load must be symmetrical about the airplane centerline. Treadway and Nontreadway areas must not be loaded simultaneously to maximum values shown. Load limits between treadways may extend over entire cargo floor width. Shoring may be required for rolling loads outside treadways.

2 Not to exceed 50 psi

Concentrated load is defined as a load in which the weight is concentrated at a point on the cargo area floor and the contact surface between the load and the floor is very small when compared to the size and weight of the total package.

3 This chart is used as a reference to determine the available area and volume of cargo area compartments. The chart is also used as a reference to determine the structural limits (flight and ground operations) of each compartment for various types of cargo. Loading of cargo must take into consideration airplane gross weight and center of gravity calculated for flight purposes. For any type of load, do not exceed the maximum compartment capacity limit, pounds limit, psi limit, or the pounds per linear feet limit.

4. An example for use of the chart for flight loading is as follows:

a. Determine dimensions of cargo.

b. Determine weight of cargo.

(1) Gross weight.
(2) Axle and tongues loads (if wheeled cargo).
(3) PSI and pounds/linear foot if bulk cargo.

c. Determine desired loading poisition in airplane (weight and balance data must be considered).

d. Check chart to determine if floor loading capacity is adequate for selected loading area. If any limit is exceeded, check shoring requirements to spread load over greater floor area or select area having greater capacity.

5 Load limits for uniform loading over entire cargo floor (compartments C-K only) are 3.0 psi and 4300 lbs/lin ft.

6 Support aft end of ramp.

7 a. To determine if an object is suitable for loading, compute the roller loads by using contact length on the pallet.

For each additional 10 in. contact length, one additional roller station will be contacted.

The roller station load can be computed by dividing the weight of the cargo by the number of roller stations contacted.

For example an 8000 lb object is uniformly distributed on two contact stations of 25 in. each. The roller station load is found by dividing 8000 by 4 (the number of roller stations contacted.).

b. If the resulting figure (roller load) is less than that given in the roller loads column (loading or unloading limits) the object may be loaded. The resulting figure (roller load) must be less than that given in the roller loads column (flight limits) for flight requirements. If the calculated figure is greater than that in the roller loads column the object may not be loaded without shoring. Either bridge type or simple shoring may be used to satisfy roller load criteria. If bridge type shoring is used, it should be placed longitudinally on the pallet and the minimum distance should be 20 in. If simple shoring is used the contact length bearing surface on the pallet at each contact point must be a minimum of 20 in. utilizing the principle of shoring effect.

8 If vehicle axles are less that four feet apart, single axle limits will apply.

CONTACT LENGTH PER CONTACT STATION	NO. OF ROLLER STATIONS CONTACTED
Less than 20 in.	1
Greater than or equal to 20 in. but less than 30 in.	2
Greater than or equal to 30 in. but less than 40 in.	3

NOTE

50 psi restriction on treadway does not apply to pneumatic tires that have 100 psi or less internal tire pressure provided axle weight and distance between axles restrictions are not exceeded.

FIGURE 43. Floor loading capacity--concentrated or pneumatic tire loads (AF53-3129 through 57-509; 57-525 and up; CG-1339 and up). (continued)

Source: https://assist.dla.mil -- Downloaded: 2016-12-11T01:38Z
Check the source to verify that this is the current version before use.

C-130

RAMP STATION	LENGTH (in.)	LENGTH (m)
0 - 2	24.50	0.622
2 - 4	23.40	0.594
4 - 6	23.86	0.606
6 - 8	24.08	0.611
8 - 10	24.08	0.611

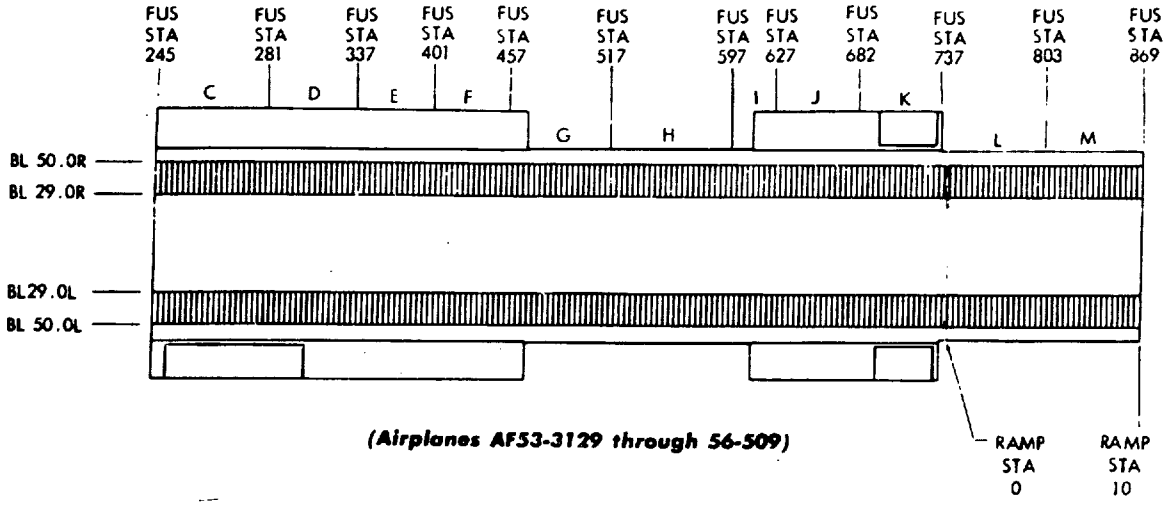

(Airplanes AF53-3129 through 56-509)

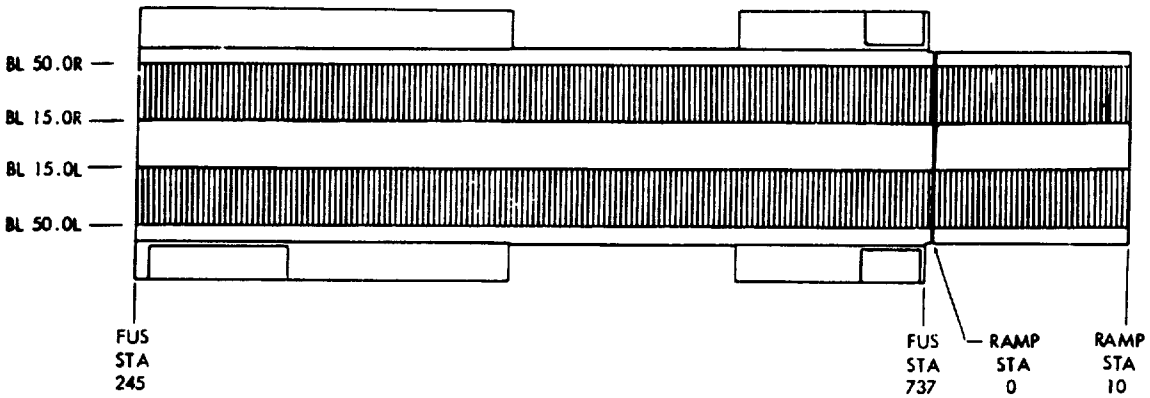

(Airplanes AF56-510 through 57-509, 57-525 and Up and CG-1339 and Up)

FIGURE 44. Treadways.

Source: https://assist.dla.mil -- Downloaded: 2016-12-11T01:38Z
Check the source to verify that this is the current version before use.

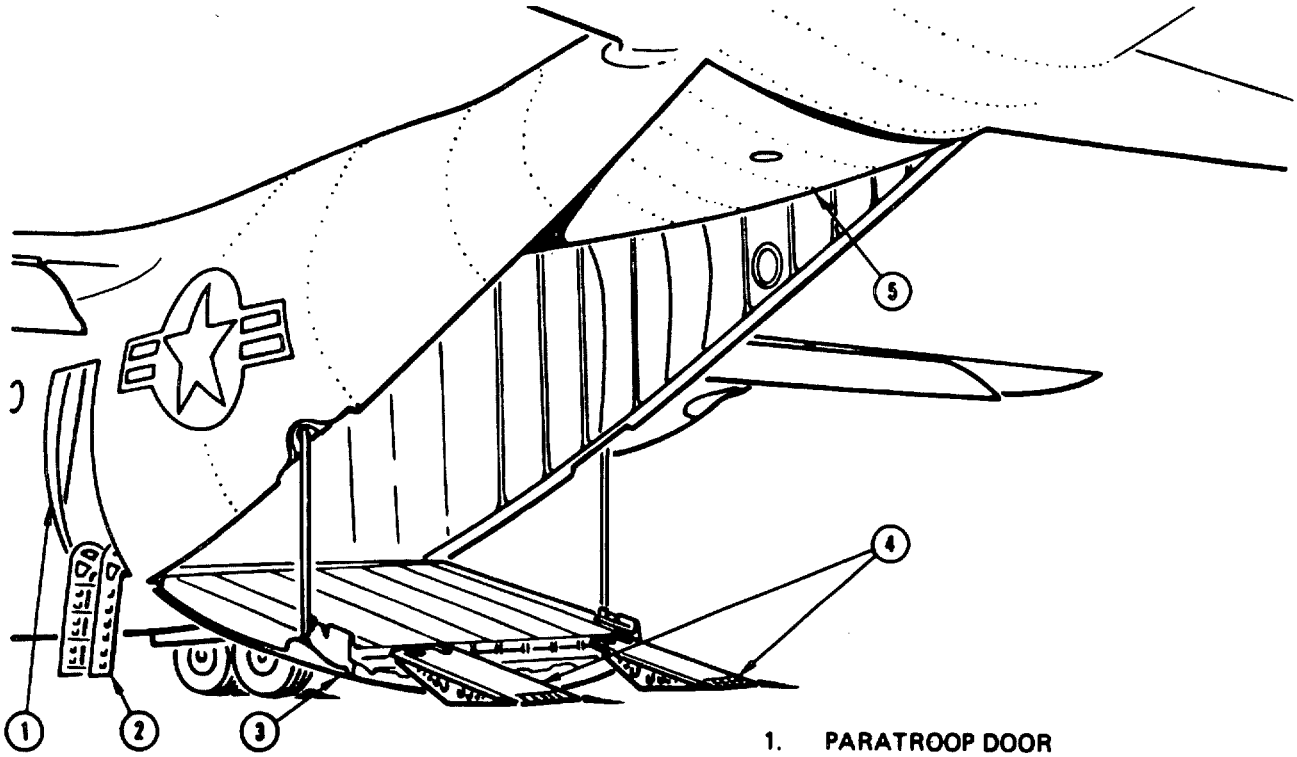

1. PARATROOP DOOR
2. PARATROOP DOOR LADDER
3. RAMP
4. AUXILIARY GROUND LOADING RAMP
5. AFT CARGO DOOR

FIGURE 45. Aft cargo door and ramp.

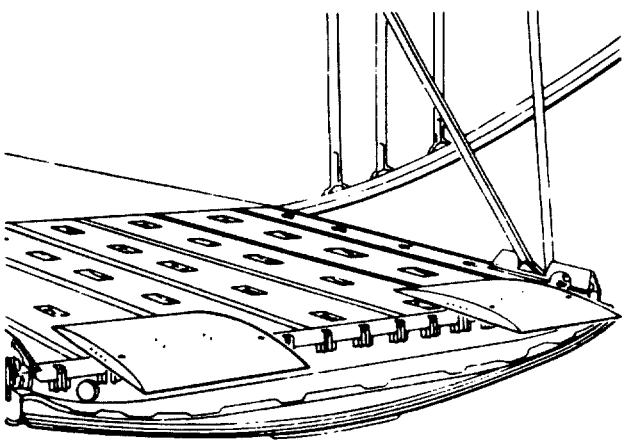

FIGURE 46a. Auxiliary truck loading ramps installed.

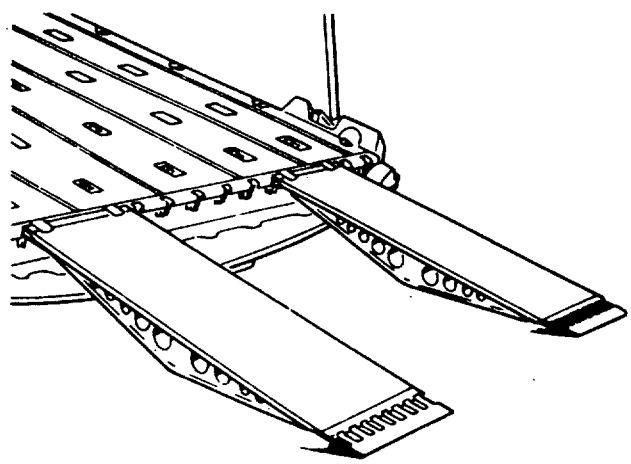

FIGURE 46b. Auxiliary ground loading ramps installed.

Source: https://assist.dla.mil -- Downloaded: 2016-12-11T01:38Z
Check the source to verify that this is the current version before use.

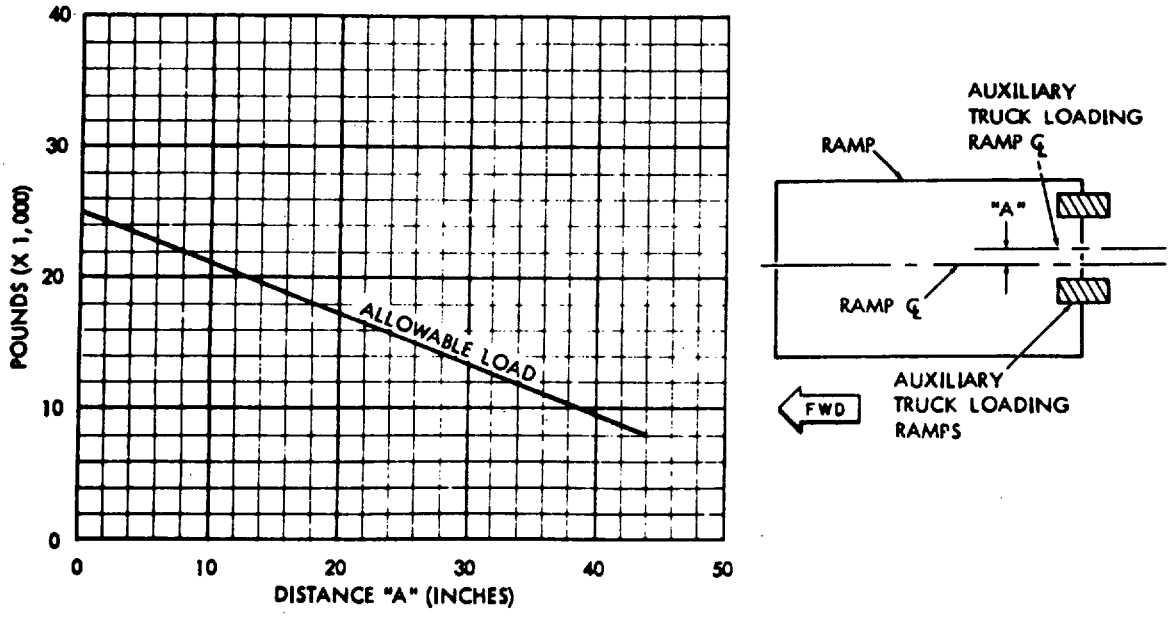

To determine distance "A", measure from the ramp centerline to a point midway between the installed ramps. Find distance "A" on the horizontal scale. Extend a line vertically from this point to the allowable load line. Extend a line horizontally until it intersects the vertical scale. Read the allowable load.

EXAMPLE: Distance "A" is 0.965 m (38 in.). Allowable load on the ramps is 4536 kg (10 000 lb).

FIGURE 47. Auxiliary truck loading ramp loads.

AIRCRAFT					
RAMP HEIGHT	C-130A	C-130B	C-130D SKIS UP	C-130D SKIS DOWN	C-130E C-130H
Minimum	40	40	40	44	39
Maximum	45	42	42	49	41
Add 2⅝ in. to all dimensions for aircraft to be loaded with rollers installed.					

METRIC EQUIVALENTS					
lb	kg	in.	m	in.	m
10	4.54	2⅝	0.067	41	1.04
20	9.07	10	0.254	42	1.07
30	13.61	20	0.508	44	1.12
40	18.14	30	0.762	45	1.14
10 000	4536.0	38	0.965	49	1.24
		39	0.991		
		40	1.02		

FIGURE 48. Ramp height.

Source: https://assist.dla.mil -- Downloaded: 2016-12-11T01:38Z
Check the source to verify that this is the current version before use.

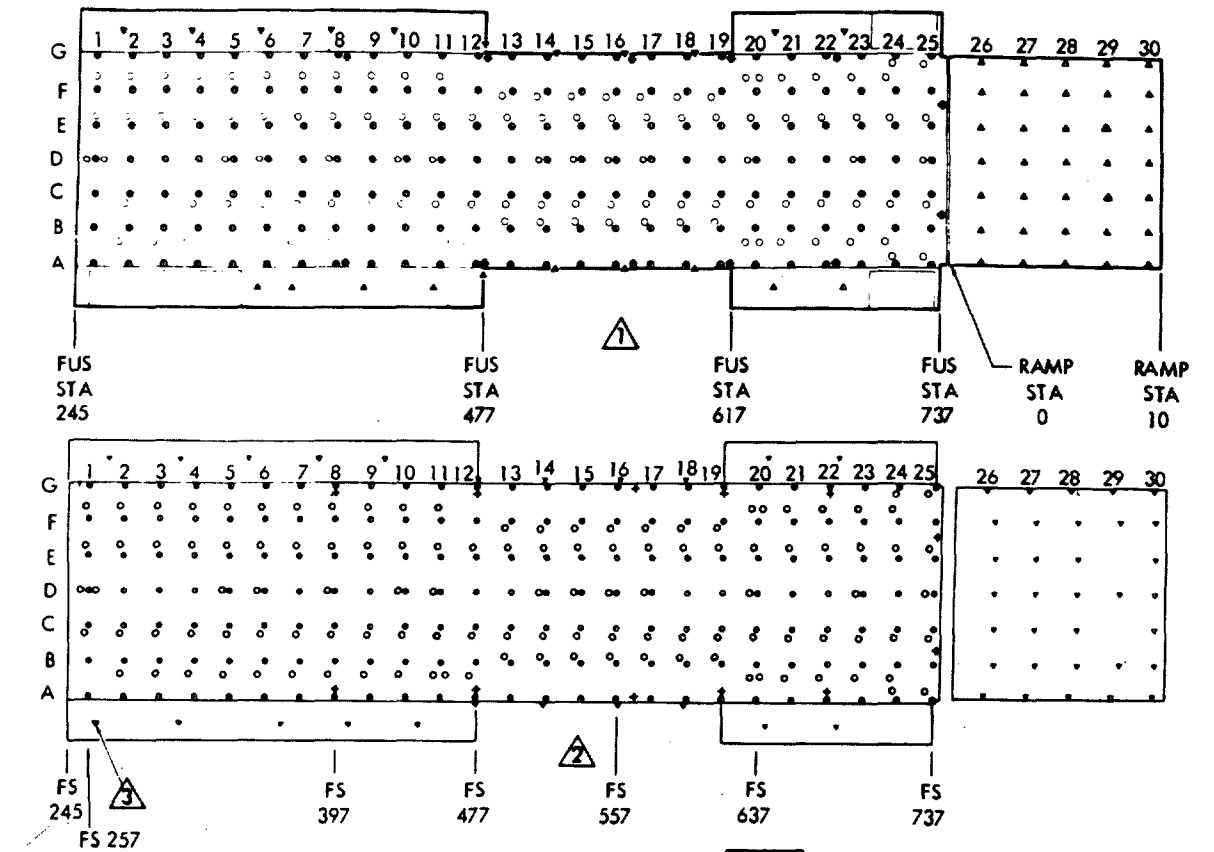

○ SEAT AND LITTER FITTINGS
▼ 5,000-POUND FITTINGS ARE 24.5 INCHES ABOVE THE CARGO FLOOR AND ON THE RAMP.
● 10,000-POUND FITTINGS
✦ 25,000-POUND FITTINGS

NOTE

1. AIRPLANES AF 53-3129 THROUGH 56-509. FOR AIRPLANE AF 53-3129 SEE PARAGRAPH 9.
2. AIRPLANES AF56-510 AND UP.
3. AIRPLANES AF 62-1784 AND UP.

FIGURE 49. Tiedown, seat, and litter fittings locations.

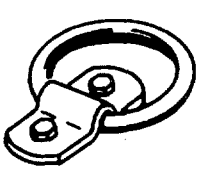

• 10,000-lb capacity fittings form a 20-in. grid pattern over the entire floor area.

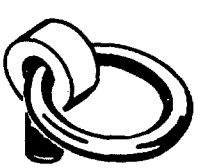

✦ 25,000-lb capacity fittings are located along the edges of the compartment floor.

FIGURE 50. Aircraft tiedowns.

Source: https://assist.dla.mil -- Downloaded: 2016-12-11T01:38Z
Check the source to verify that this is the current version before use.

ATTENTION CUSTOMER

MIL-STD-1791, dated 31 October 1985 contains figure 51, 71, 84, 87, 88, 89, 90,93 and 103 that are foldouts and cannot be supplied as part of this digital file at this time. If you require it please fax this information sheet with your complete mailing address and we will mail them to you. Our fax number is (215) 697-1462.

Mailing Address: _____

_____

_____

Please circle the foldout figure you require below:

Figure 51, page 245

Figure 71, page 269

Figure 84, page 282

Figure 87, page 285

Figure 88, page 286

Figure 89, page 287

Figure 90, page 288

Figure 93, page 293

Figure 103, page 304

Source: https://assist.dla.mil -- Downloaded: 2016-12-11T01:38Z
Check the source to verify that this is the current version before use.

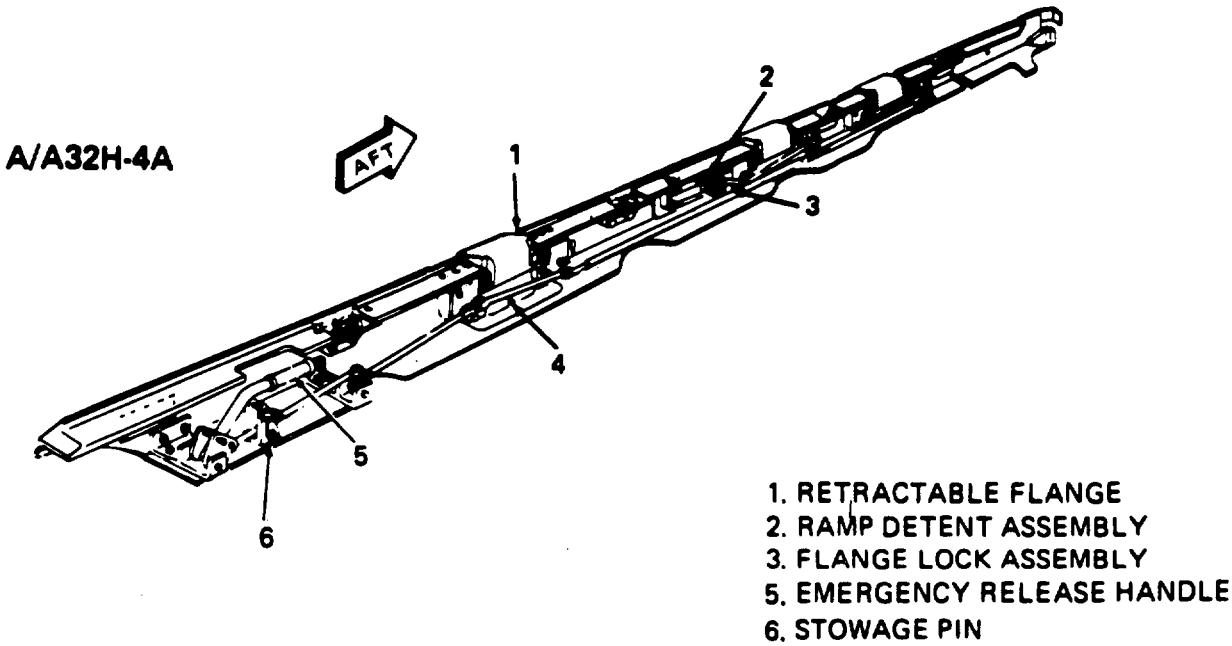

FIGURE 52. A/A32H-4A dual rail cargo handling system.

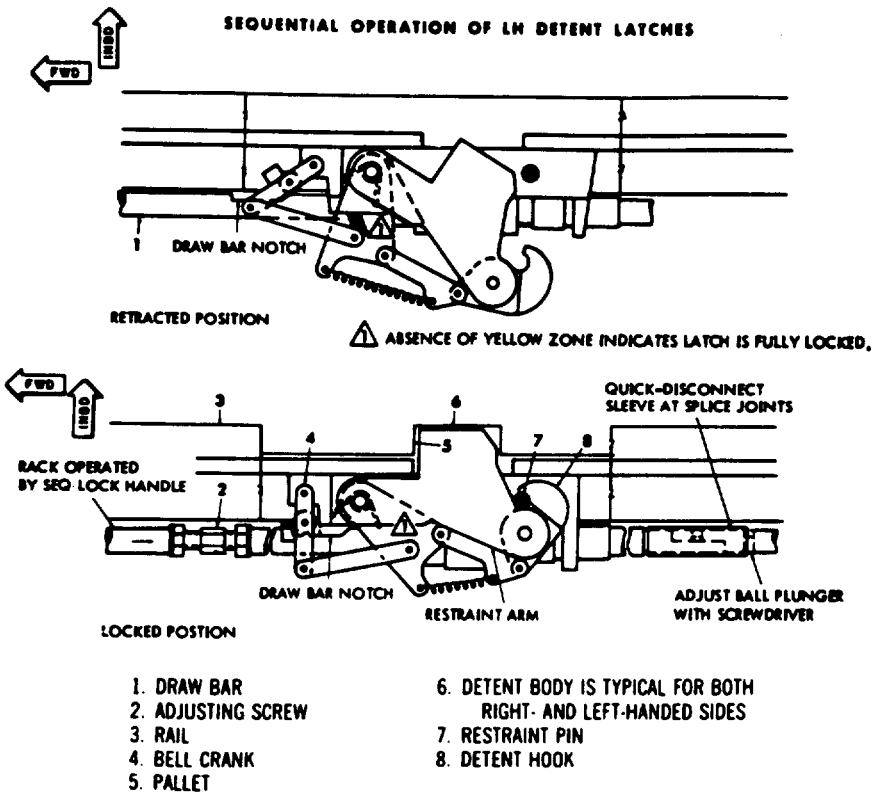

FIGURE 53. A/A32H-4A left-hand detent latch positions.

Source: https://assist.dla.mil -- Downloaded: 2016-12-11T01:38Z
Check the source to verify that this is the current version before use.

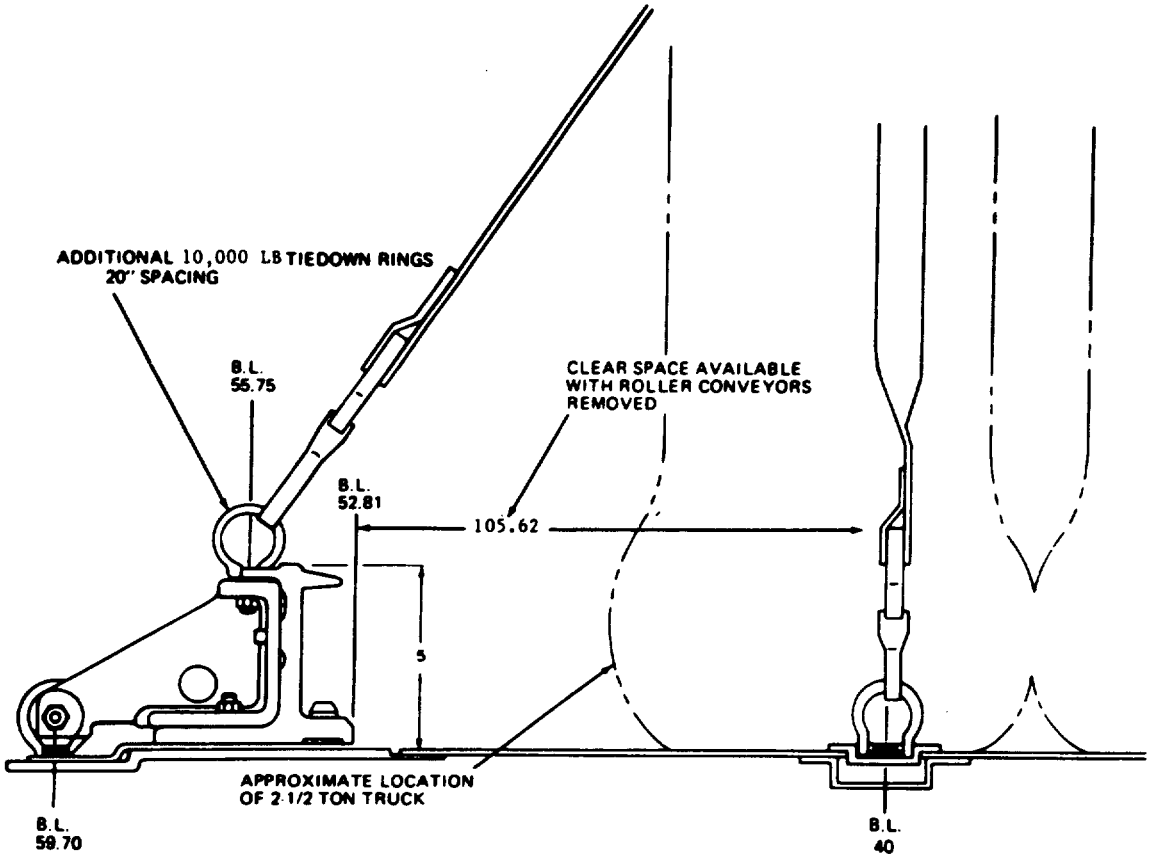

ALL 10,000 LB RINGS AVAILABLE FOR TIEDOWN
ON A/A32H-4A SYSTEM BETWEN RAILS

FIGURE 54. Rail mounted cargo rings (-4A).

Source: https://assist.dla.mil -- Downloaded: 2016-12-11T01:38Z
Check the source to verify that this is the current version before use.

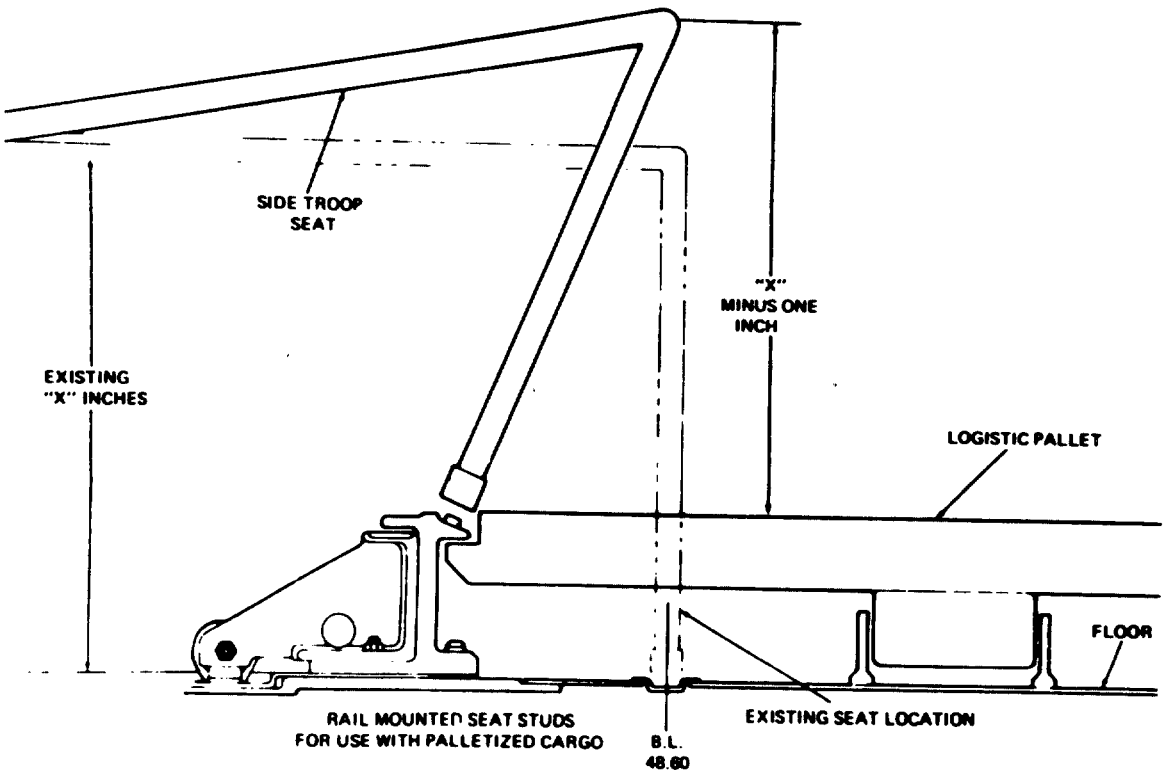

FIGURE 55. Rail mounted seat studs (-4A).

Source: https://assist.dla.mil -- Downloaded: 2016-12-11T01:38Z
Check the source to verify that this is the current version before use.

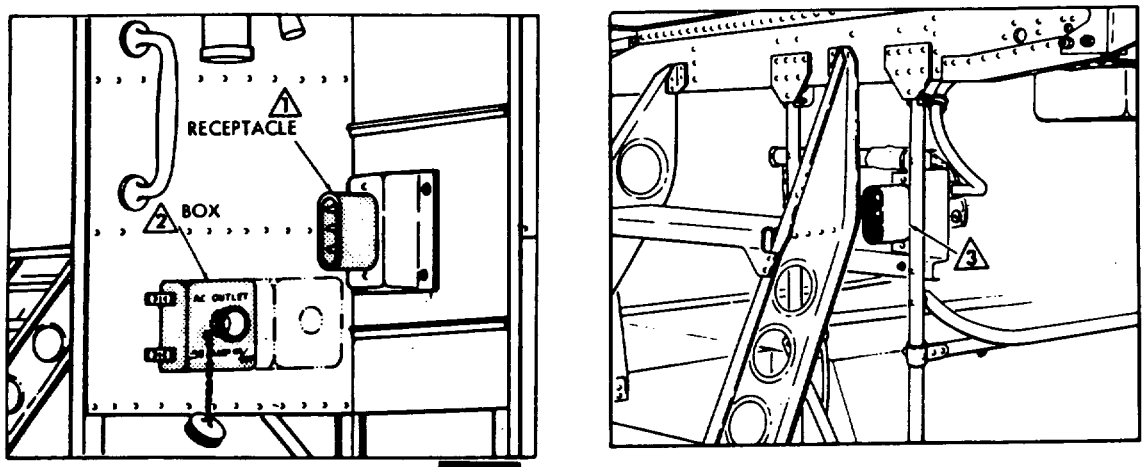

NOTE

1. AIRPLANES AF61-2358 AND UP.
2. AIRPLANES AF62-1784 AND UP.
3. AIRPLANES PRIOR TO AF61-2358.

FIGURE 56. Power outlets.

Source: https://assist.dla.mil -- Downloaded: 2016-12-11T01:38Z
Check the source to verify that this is the current version before use.

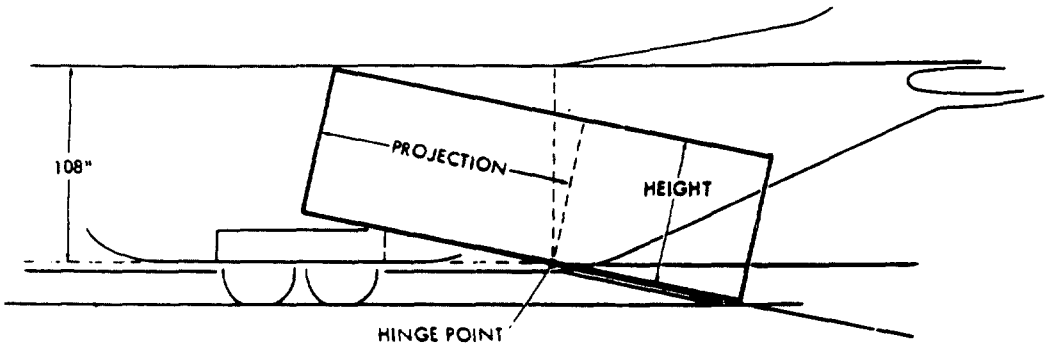

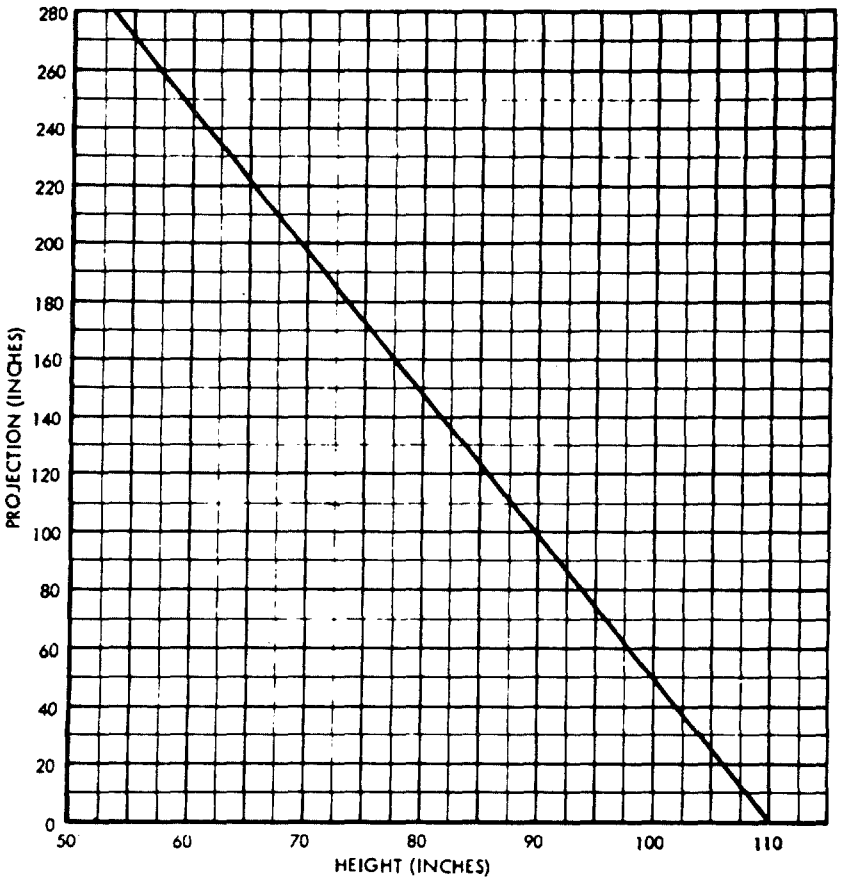

METRIC EQUIVALENTS	
INCHES	METERS
20	0.500
38	0.965
40	1.02
42	1.07
44	1.12
46	1.17
50	1.27
60	1.52
70	1.78
80	2.03
90	2.29
99	2.52
100	2.54
108	2.74
110	2.79
120	3.05
140	3.56
160	4.57
180	4.57
191	4.85
200	5.59
220	5.59
240	6.10
260	6.60
280	7.11

To calculate the maximum cargo projection into the airplane, extend a line to the left scale from a point on the chart curve directly above the cargo height on the bottom scale. Read the allowable projection.

EXAMPLE: Cargo height is 2.29 m (90 in.). Maximum projection is 2.52 m (99 in.).

FIGURE 57. Overhang and projection limits (cargo).

Source: https://assist.dla.mil -- Downloaded: 2016-12-11T01:38Z
Check the source to verify that this is the current version before use.

1 When vehicle wheelbase is greater than (2 x ramp length), minimum ground clearance occurs approximately 191 inches forward of rear wheels.

2 The vehicle design shall be based upon a 45-inch ramp height.

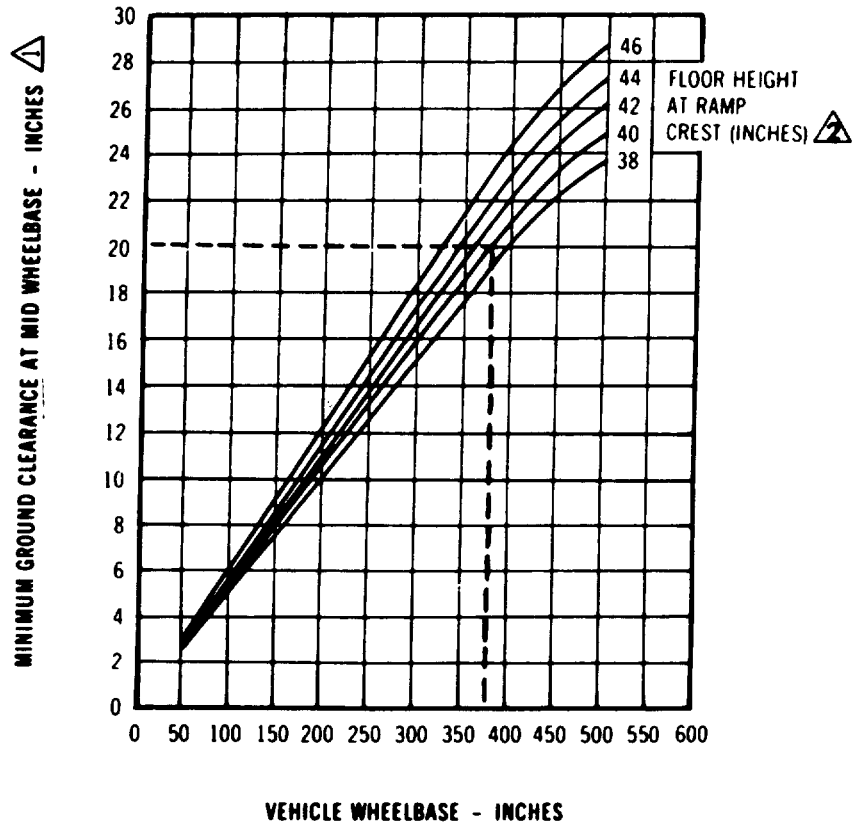

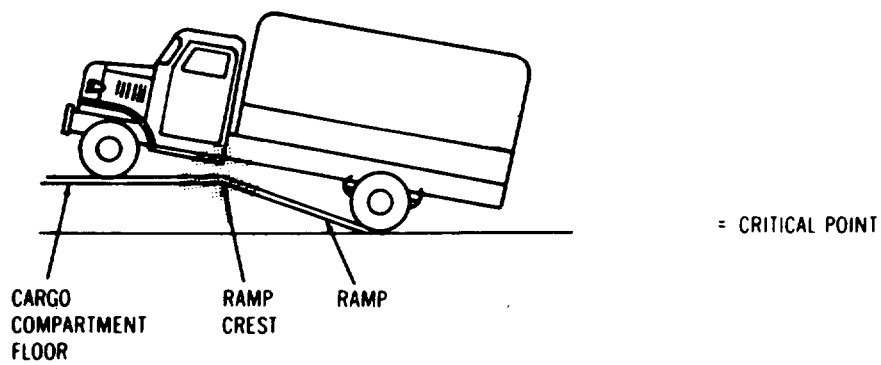

CHART A - RAMP CREST LIMITS

FIGURE 58. Overhang and projection limits (vehicle).

Source: https://assist.dla.mil -- Downloaded: 2016-12-11T01:38Z
Check the source to verify that this is the current version before use.

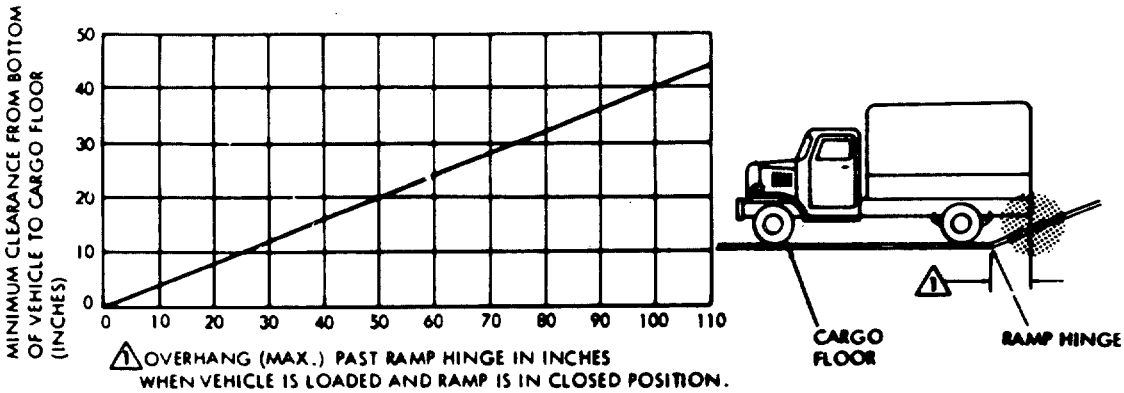

CHART B - PARKING OVERHANG LIMITS

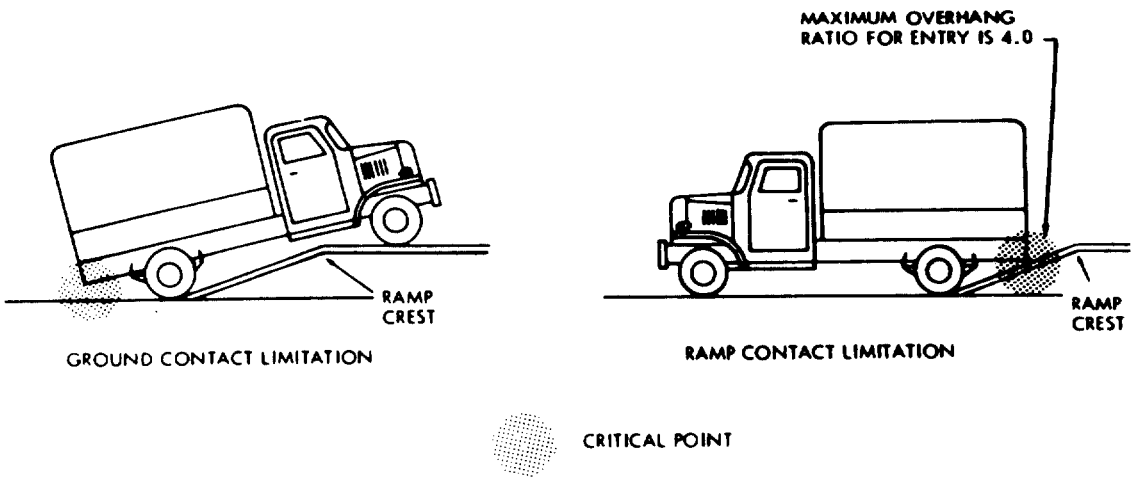

CHART B - PARKING OVERHANG LIMITS

FIGURE 58. Overhang and projection limits (vehicle). (continued)

Source: https://assist.dla.mil -- Downloaded: 2016-12-11T01:38Z
Check the source to verify that this is the current version before use.

△1 The vehicle design shall be based upon a 45-inch ramp height.

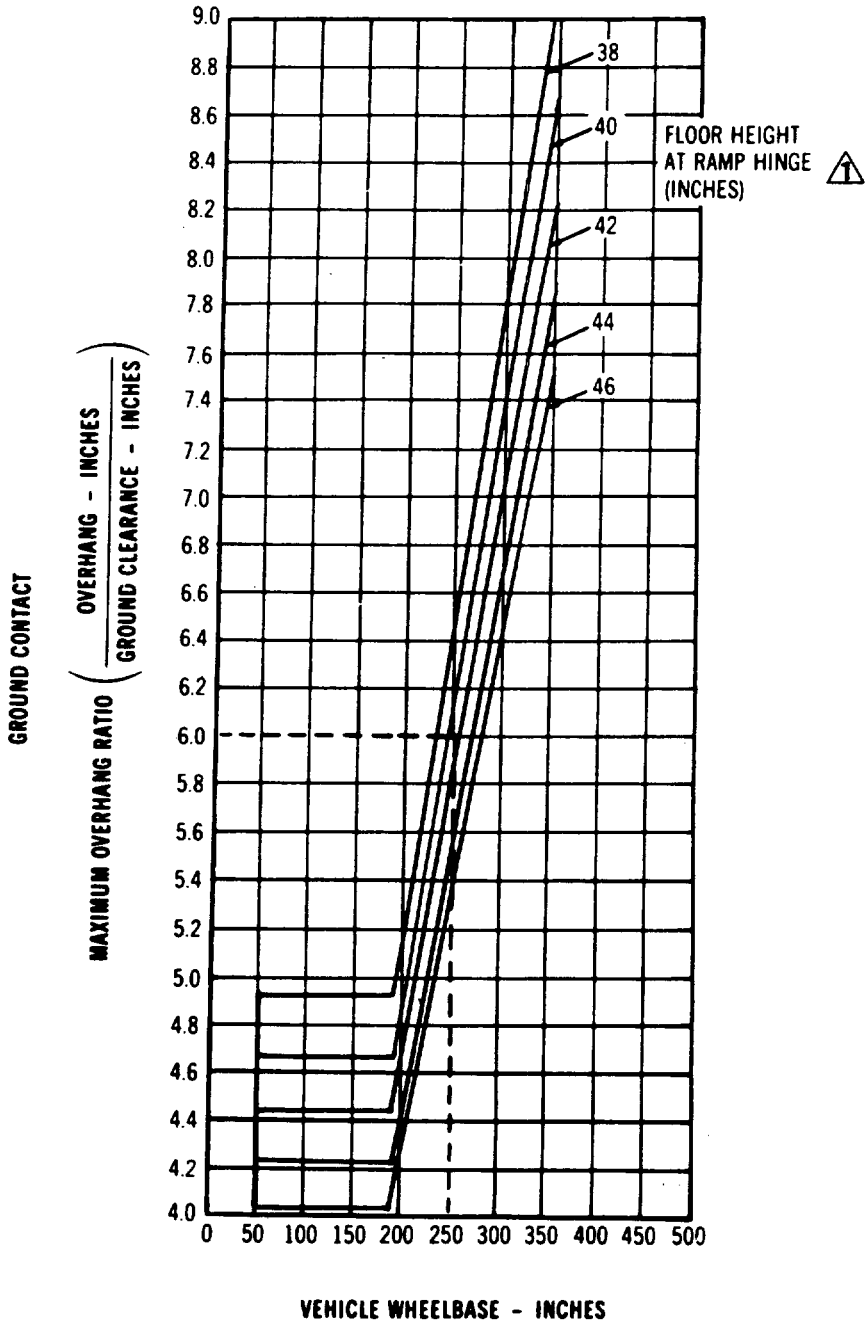

CHART C - LOADING OVERHANG LIMITS

FIGURE 58. Overhang and projection limits (vehicle). (continued)

Source: https://assist.dla.mil -- Downloaded: 2016-12-11T01:38Z
Check the source to verify that this is the current version before use.

⚠ The vehicle design shall be based upon a 45-inch ramp height.

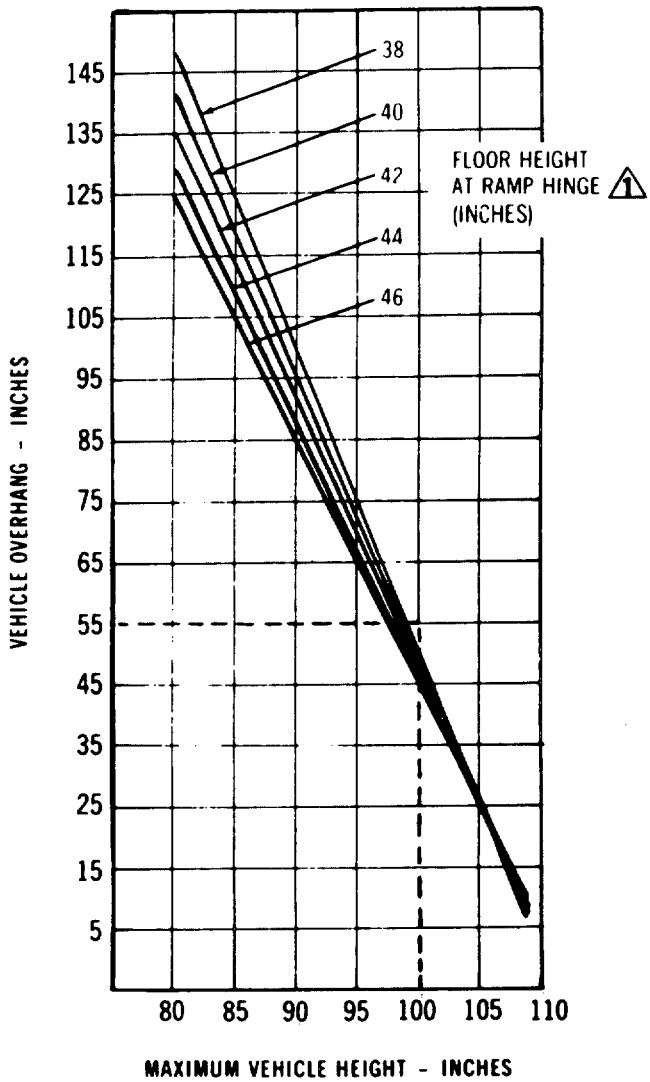

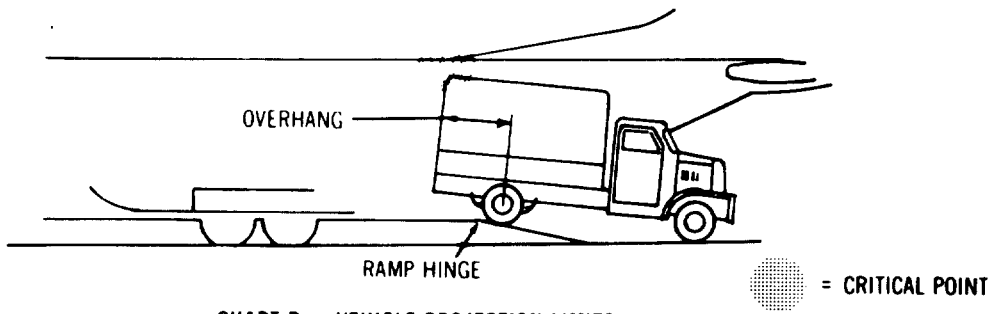

CHART D - VEHICLE PROJECTION LIMITS

FIGURE 58. Overhang and projection limits (vehicle). (continued)

Source: https://assist.dla.mil -- Downloaded: 2016-12-11T01:38Z
Check the source to verify that this is the current version before use.

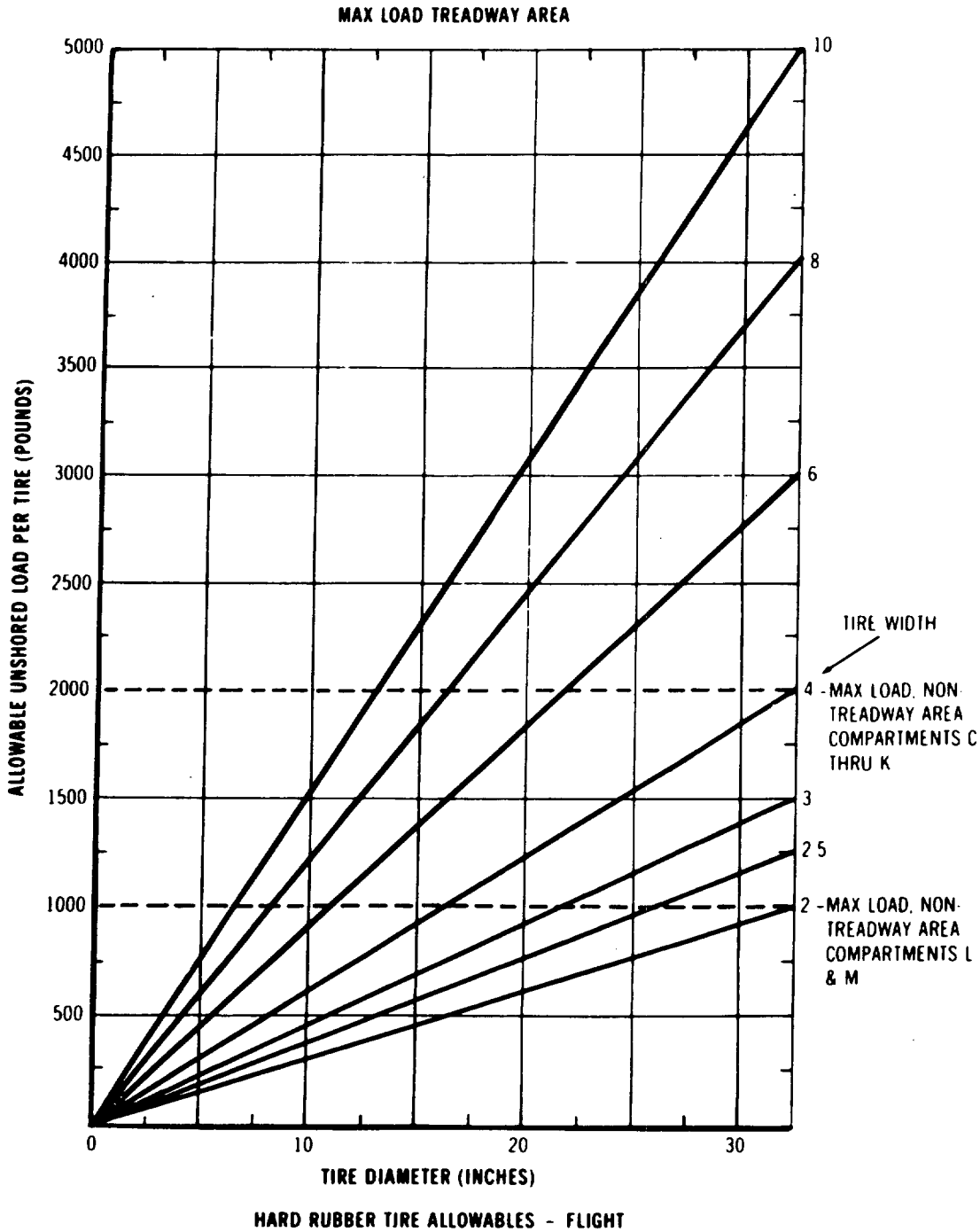

FIGURE 59. Flight loading capacity (stowed-solid tires).

Source: https://assist.dla.mil -- Downloaded: 2016-12-11T01:38Z
Check the source to verify that this is the current version before use.

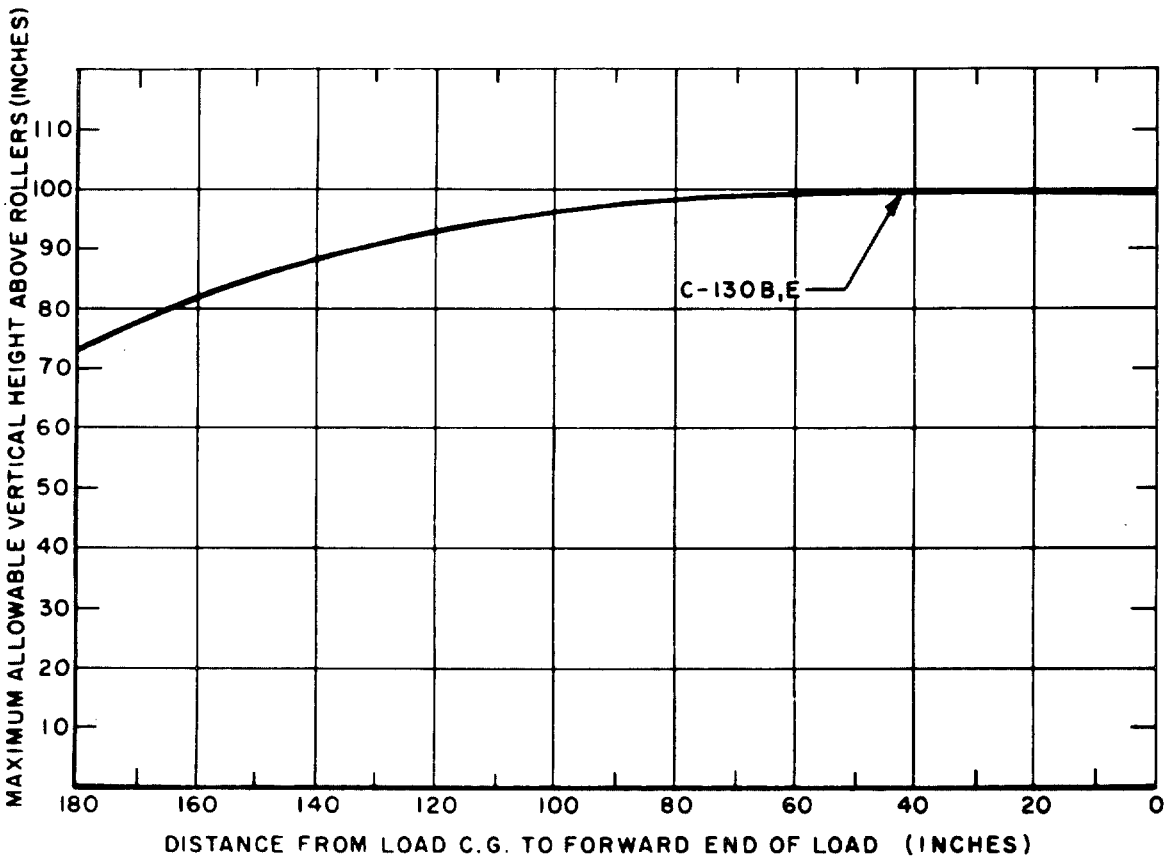

METRIC EQUIVALENTS	
INCHES	METERS
10	0.254
20	0.508
30	0.762
40	1.02
50	1.27
60	1.52
70	1.78
80	2.03
90	2.29
100	2.54
110	2.79
120	3.05
140	3.56
160	4.06
180	4.57

FIGURE 60. Tipoff curve.

Source: https://assist.dla.mil -- Downloaded: 2016-12-11T01:38Z
Check the source to verify that this is the current version before use.

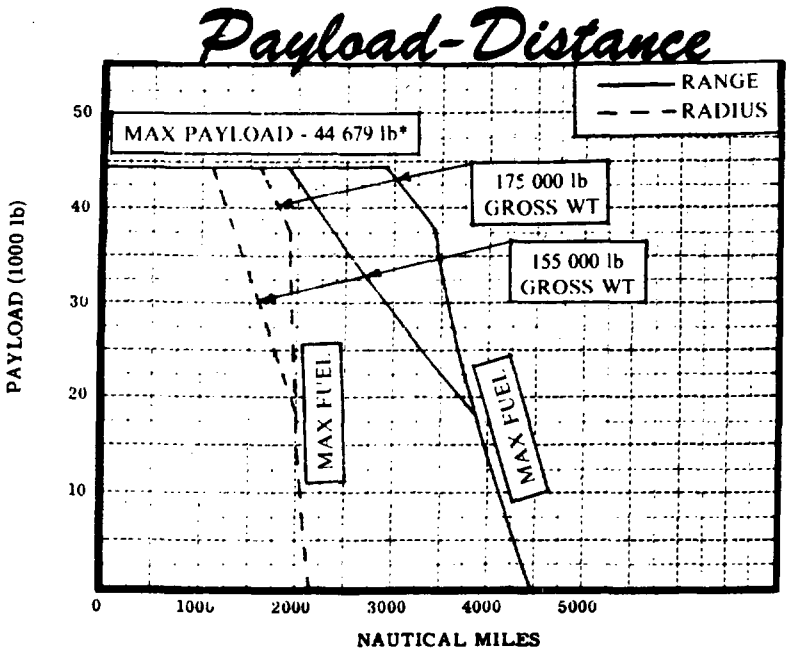

METRIC EQUIVALENTS			
lbs	kg	nmi	km
10 000	4 536	1000	1852
20 000	9 072	2000	3704
30 000	13 608	3000	5556
40 000	18 144	4000	7408
44 679	20 266	5000	9260
50 000	22 680		
75 000	34 019		
155 000	70 307		
175 000	79 379		

FIGURE 61. Payload-range.

Source: https://assist.dla.mil -- Downloaded: 2016-12-11T01:38Z
Check the source to verify that this is the current version before use.

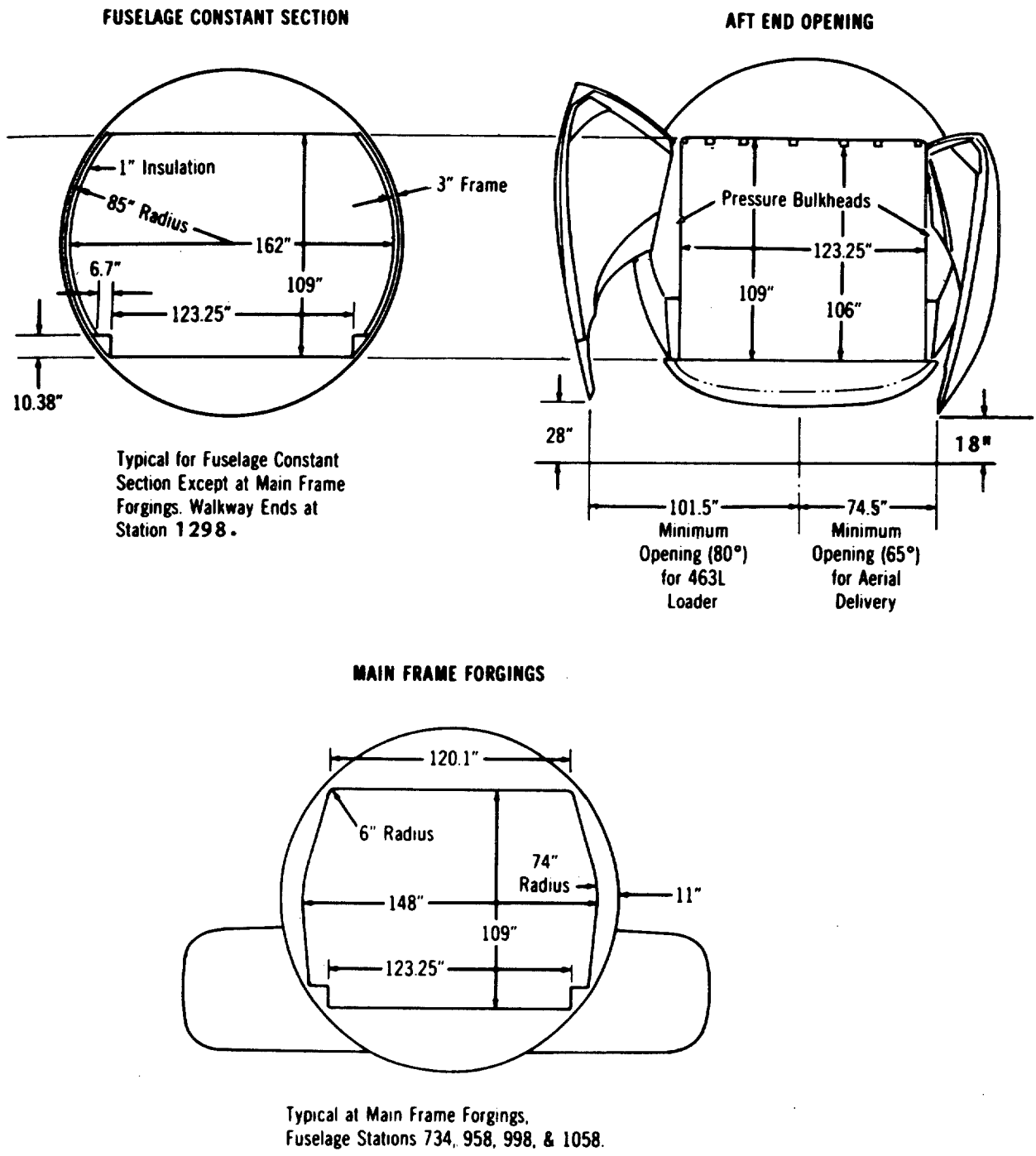

FIGURE 62. Station dimensions.

Source: https://assist.dla.mil -- Downloaded: 2016-12-11T01:38Z
Check the source to verify that this is the current version before use.

AFT END OPENING

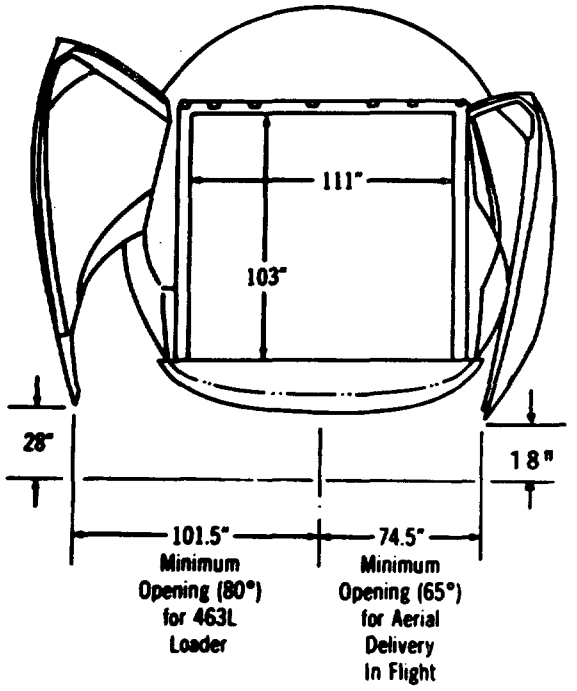

LENGTH 1114 INCHES

C-141 CARGO DIMENSIONAL DESIGN LIMITS

METRIC EQUIVALENTS			
INCHES	METERS	DEGREES	RADIANS
28.0	0.711	65	1.13
74.5	1.89	80	1.40
101.5	2.59		
103.0	2.62		
109.0	2.77		
111.0	2.82		
1114.0	28.29		

FIGURE 62. Station dimensions. (continued)

Source: https://assist.dla.mil -- Downloaded: 2016-12-11T01:38Z
Check the source to verify that this is the current version before use.

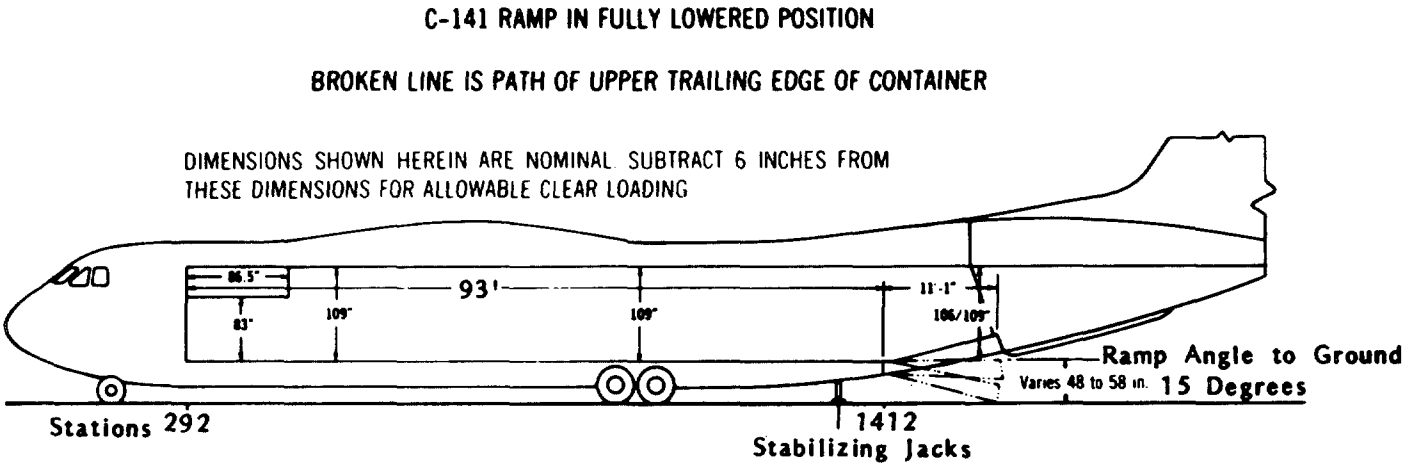

FIGURE 63. C-141 ramp in fully lowered position.

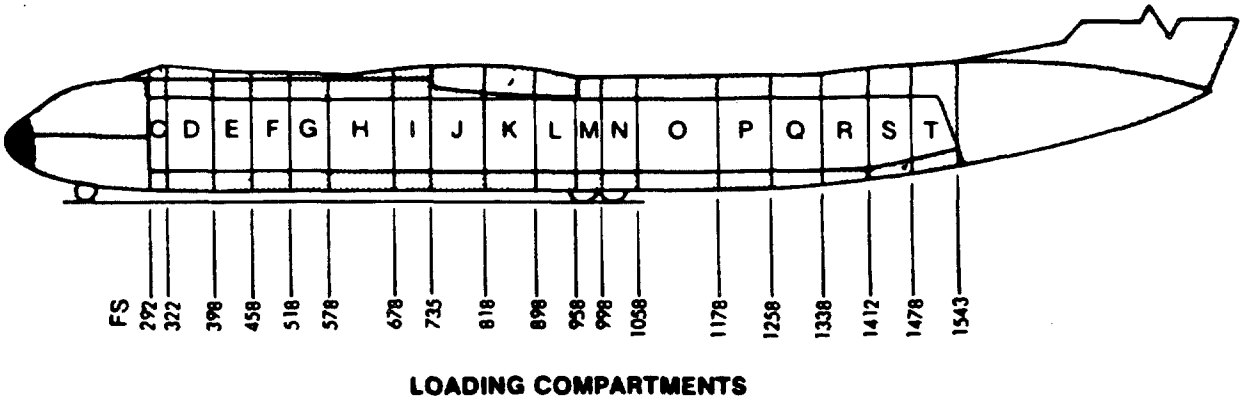

FIGURE 64. Cargo restrictions.

Source: https://assist.dla.mil -- Downloaded: 2016-12-11T01:38Z
Check the source to verify that this is the current version before use.

COMPARTMENT	REFERENCE DATA					WORKING CONTACT AREA PRESSURES FOR GENERAL CARGO LOADING (PSI)					
	CENTROID	FLOOR AREA (SQUARE FEET)	VOLUME (CUBIC FEET)	FORWARD LIMIT STATION	AFT LIMIT STATION	TREADWAYS		BETWEEN TREADWAYS		OUTBOARD OF TREADWAYS	
						LOAD-OFF-LOAD	FLIGHT	LOAD-OFF-LOAD	FLIGHT	LOAD-OFF-LOAD	FLIGHT
	1	2	3	4	5	6	7 (3)	8	9 (3)	10	11 (3)
C (1)											
D	360	64.9	590	322	398	125	50	63	25	125	50
E	428	51.2	465	398	458	↑	↑	↑	↑	↑	↑
F	488	51.2	465	458	518						
G	548	51.2	465	518	578						
H	628	85.3	775	578	678						
I	707	48.5	440	678	735						
J	777	71.0	645	735	818						
K	858	68.5	621	818	898						
L	928	51.2	465	898	958						
M	978	34.2	310	958	998						
N	1028	51.2	465	998	1058						
O	1118	102.5	931	1058	1178						
P	1218	68.5	621	1178	1258						
Q	1298	68.5	621	1258	1338						
R	1375	63.4	575	1338	1412						
S	1445	56.4	481	1412	1478	↓	(5) ↓	↓	(5) ↓	↓	(5) ↓
T	1511 (2)	34.2 (2)	255 (2)	1478	1543	125	50	63	25	125	50

NOTE

(1) Cargo is not to be loaded in compartment C. This is to allow access to the right side of the cargo compartment and to the toilet facilities.

(2) Cargo should be loaded so that the cargo or pallets in compartment T do not prevent inspection of the pressure door lock indicators in flight.

(3) For any item that has a contact area of 9 square inches or less, the following puncture/crushing psi limits are allowed. There must be a minimum spacing of 20 inches between contact point centers.

Outboard of treadways and treadways – 104 psi (flight)

Between treadways – 70 psi (flight)

(4) The following restrictions apply to loads placed on the cargo ramp:

a. The ramp must be resting on the ground or be in a horizontal position with the ramp support links connected during loading and offloading maximum loads. Maximum loads may also be loaded/ offloaded with the ramp at an intermediate position with the ramp support links disconnected provided ramp pedestal shoring is used.

b. The total ramp load when it is supported only by the ramp actuators is limited to 7,500 pounds.

c. The maximum load allowable on the aft end of the ramp, including a teetering load, when the ramp is supported only by the ramp actuators is 4,000 pounds whose CG lies within 15 inches of the aircraft centerline.

d. The maximum palletized load to be carried is 7,500 pounds.

e. The total ramp cargo center of gravity shall not be aft of FUS STA 1473.

FIGURE 65. Loading data.

Source: https://assist.dla.mil -- Downloaded: 2016-12-11T01:38Z
Check the source to verify that this is the current version before use.

COMPARTMENT LOAD LIMITATIONS			
	PALLETIZED/AIRDROP CARGO		
	MAXIMUM INDIVIDUAL ROLLER LOAD (POUND/ROLLER) 5		
	LOADING OFF-LOADING	FLIGHT	
	12	13	INTENTIONALLY
C 1	3555	1580	LEFT
D E F G R S T	↕	↕	BLANK
	3555	1580	

5 The addition of shoring increases contact surfaces area only; it does not increase psi.

6 If the crest angle of the ramp is greater than the bogie-action angle of a tandem axle vehicle, the total bogie wheel load will shift onto the wheels of a single axle when the bogie reaches the ramp crest at FUS STA 1412. This single axle and its wheels must conform to the limits set by this chart.

7 See figure for aft most allowable axle location.

8 A 5,000 to 7,000 pound wheel can be carried in flight if shoring is used. Shoring requirements are as follows: thickness - 3 inches minimum; length - 1.0 x outside diameter of tire; width - 2.0 maximum tire width. When sleeper shoring is required under a vehicle, parking shoring under the wheels of a vehicle is not required.

9 20 percent increase in max wheel loadings for flight in D through R compartments between treadways can be obtained by using 2-inch thick minimum shoring. The minimum shoring length and width should be 1.0 x the outside diameter of the tire, and 2.0 x the maximum tire width. Pneumatic tire pressure is not to exceed 100 psi. When sleeper shoring is required under a vehicle, parking shoring under the wheels of a vehicle is not required.

10 Maximum allowable ramp hinge load is 32,500 pounds. When individual axle weight exceeds 25,000 pounds, only one axle is allowed on the ramp at any time during the loading/offloading.

FIGURE 65. Loading data. (continued)

Source: https://assist.dla.mil - Downloaded: 2016-12-11T01:38Z
Check the source to verify that this is the current version before use.

MAXIMUM AXLE AND WHEEL WEIGHTS FOR VEHICLES WITH PNEUMATIC TIRES

	TREADWAYS				BETWEEN TREADWAYS				OUTBOARD OF TREADWAYS			
	LOADING/ OFFLOADING		FLIGHT		LOADING/ OFFLOADING		FLIGHT		LOADING/ OFFLOADING		FLIGHT	
	MAX AXLE	MAX WHEEL	MAX AXLE	MAX WHEEL	MAX AXLE	MAX WHEEL	MAX AXLE	MAX WHEEL	MAX AXLE	MAX WHEEL	MAX AXLE	MAX WHEEL
	14	15	16	17	18	19	20	21	22	23	24	25
C	32500	7500	10000	5000	12000	3000	5000	1250	32500	7500	10000	5000
D			10000				5000	1250			10000	
E			20000				4400	1100			20000	
F												
G												
H												
I			20000				4400	1100			20000	
J			10000				3700	925			10000	
K												
L												
M												
N												
O												
P												
Q												
R			10000			3000	3700	925			10000	
S			7500			5000	7500	5000			7500	
T	32500	7500	7500	5000	12000	5000	7500	5000	32500	7500	7500	5000

(11) Wheel loads are maximum individual wheel loads.

(12) Do not stow any wheels on the outboard of treadway areas adjacent to the troop doors.

(13) The total weight of payload in compartments D through H shall not exceed 45,000 pounds.

(14) Does not apply to wide based tires size 14 x 17.5.

(15) To determine individual roller load when an item is palletized, use the item's actual contact length per contact point on the pallet.

Discussion: Maximum individual roller capacities established by columns 14 and 15 must not be exceeded when loading palletized cargo. These limits are established engineering capacities based on structural limitations.

Method for determining roller loads for skid mounted palletized cargo:

a. Count the number of points contacting the pallet.

b. Measure the longitudinal length of each contact point. Contact length is less than 20 inches, roller contacted -1, contact length is 20 inches or more, but less than 30 inches, rollers contact -2, etc.

Note: If the distance between two longitudinal contact points is 10 inches or more, each point will be computed separately. If the distance between two longitudinal contact points is less than 10 inches, combine the total contact length, then divide by 10. This will equal the number of rollers contacted.

c. Divide load weight by the number of contact points.

d. Divide contact point weight by number of rollers contacted by that point. This weight must be equal to or less than weights shown in column 15.

FIGURE 65. Loading data. (continued)

Source: https://assist.dla.mil -- Downloaded: 2016-12-11T01:38Z
Check the source to verify that this is the current version before use.

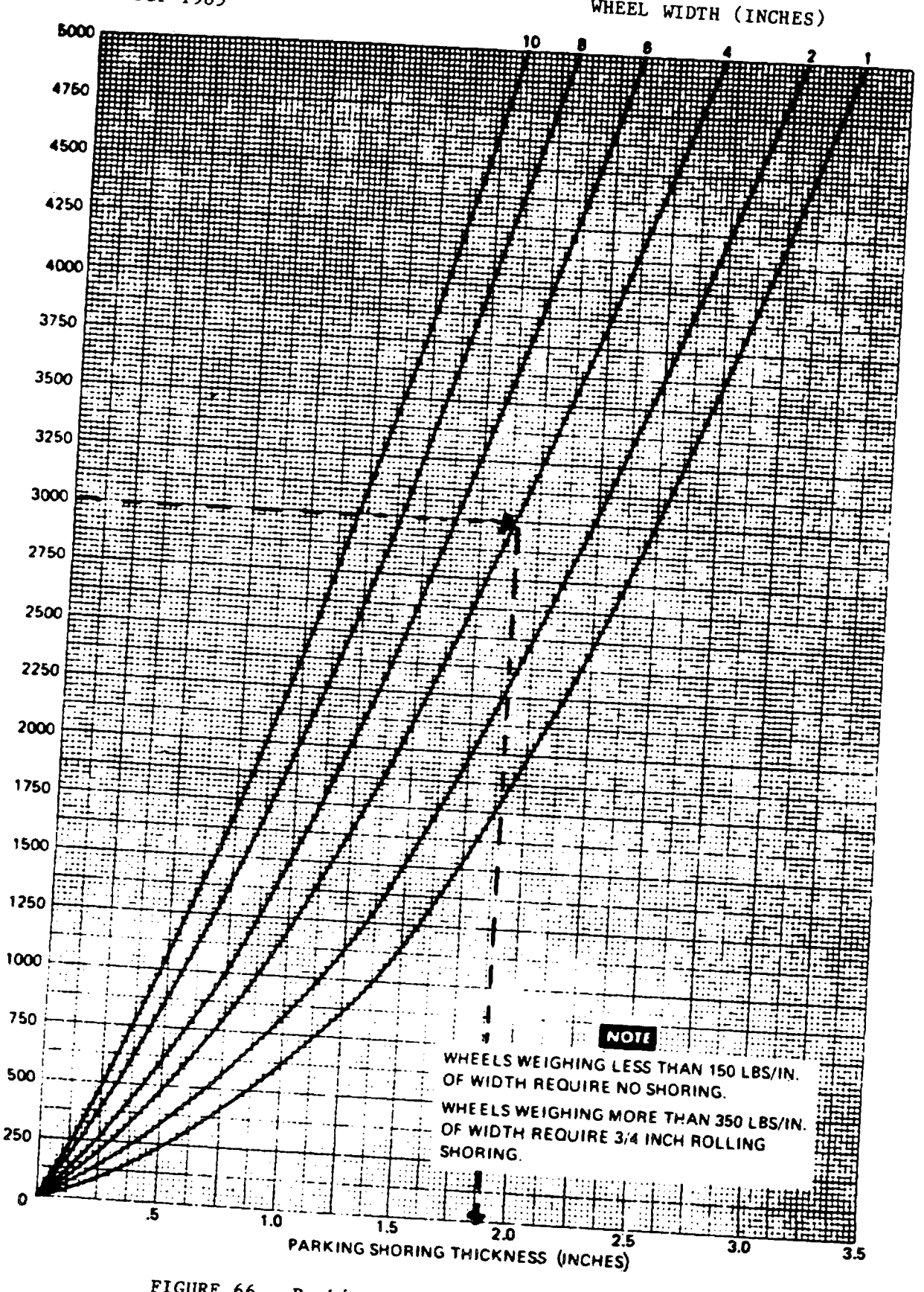

FIGURE 66. Parking shoring thickness (inches).

Source: https://assist.dla.mil -- Downloaded: 2016-12-11T01:38Z
Check the source to verify that this is the current version before use.

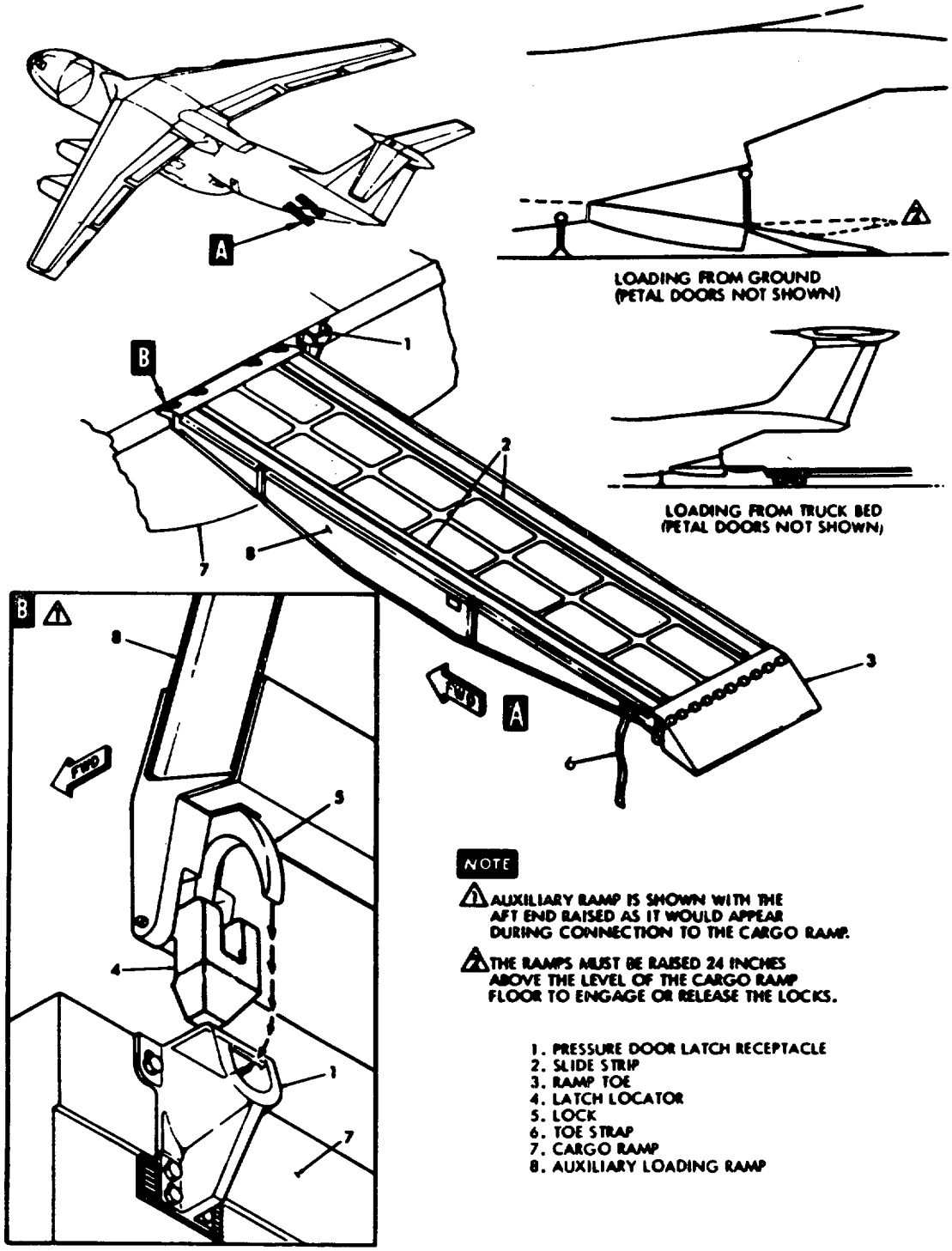

FIGURE 67. Auxiliary loading ramps.

Source: https://assist.dla.mil -- Downloaded: 2016-12-11T01:38Z
Check the source to verify that this is the current version before use.

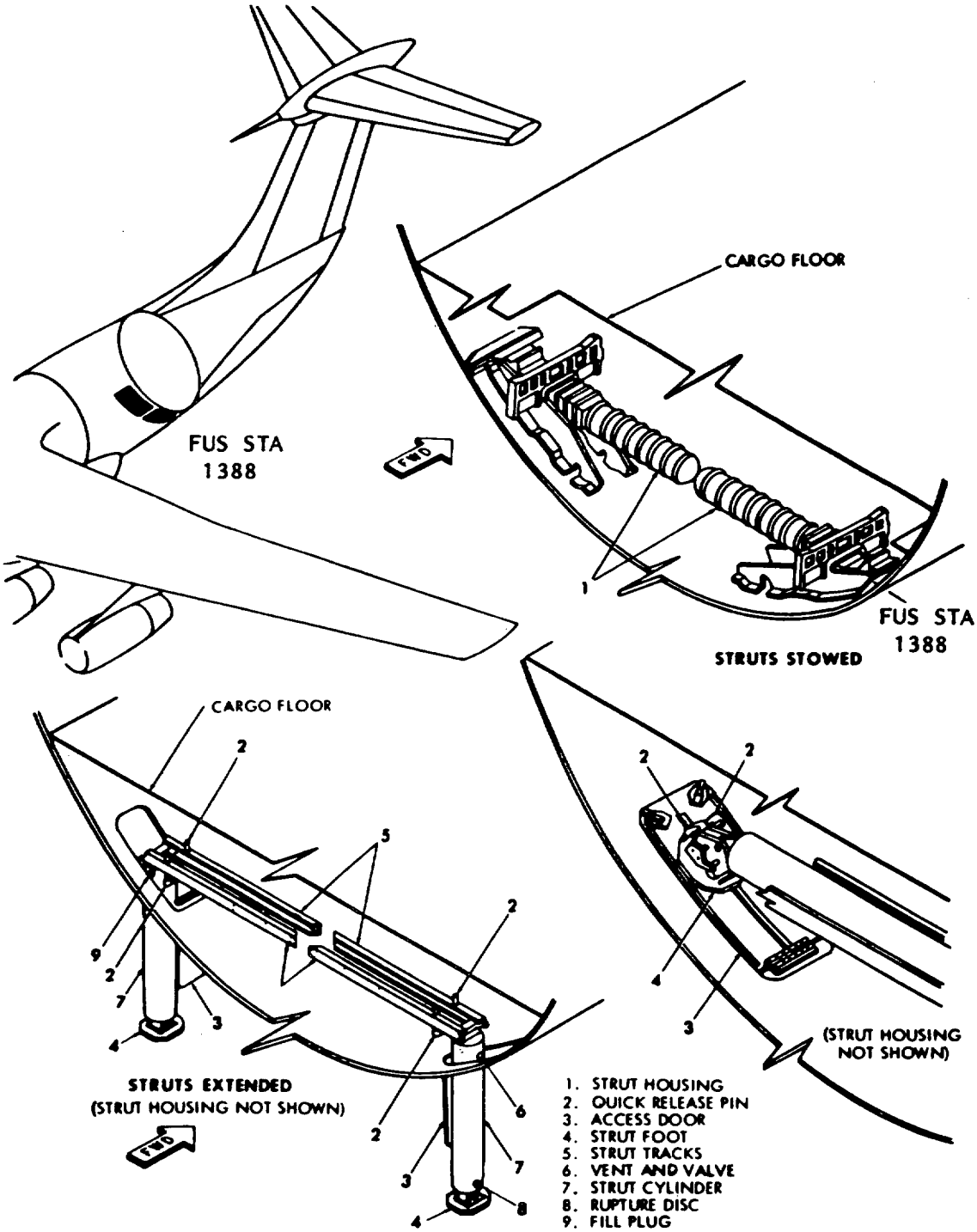

FIGURE 68. Cargo loading stabilizer struts.

Source: https://assist.dla.mil -- Downloaded: 2016-12-11T01:38Z
Check the source to verify that this is the current version before use.

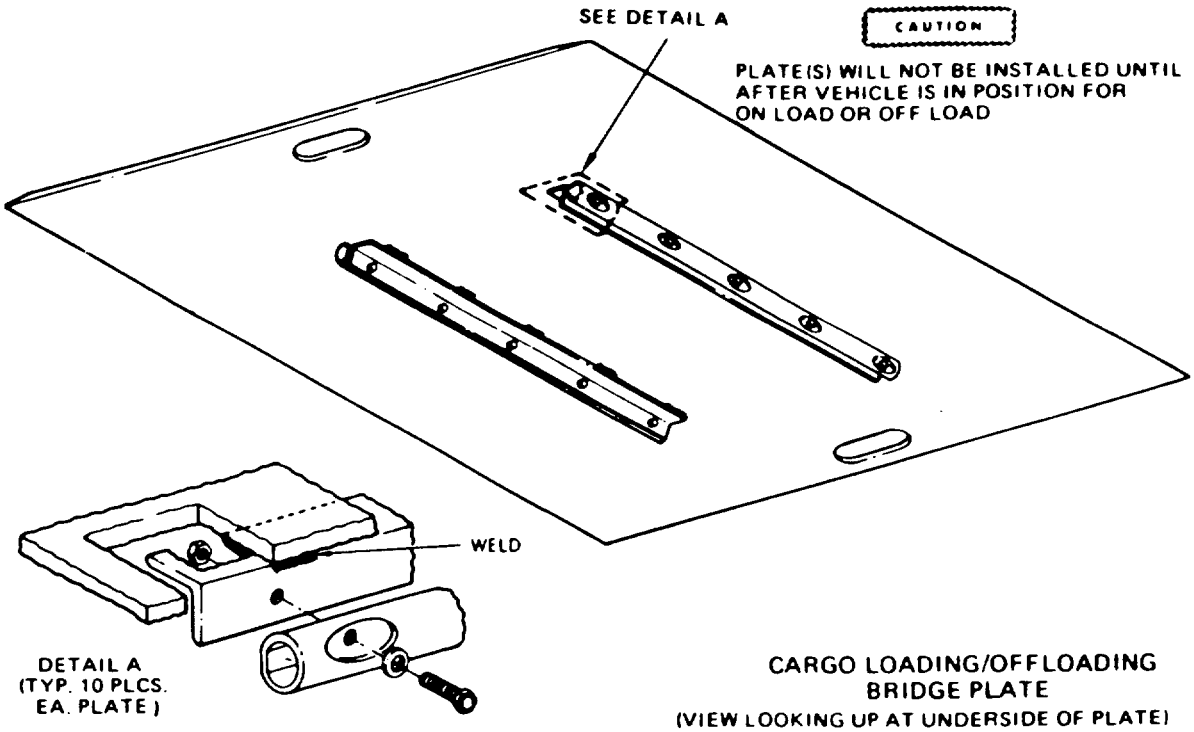

CARGO LOADING/OFFLOADING BRIDGE PLATE
(VIEW LOOKING UP AT UNDERSIDE OF PLATE)

NOTES
1 MAXIMUM LOAD ALLOWED IS 7500 POUNDS PER PLATE
2 PLATES LOCALLY MANUFACTURED IN ACCORDANCE WITH AF DWG NO. 7231030 (WRAMA)

FIGURE 69. Steel bridge plate.

Source: https://assist.dla.mil -- Downloaded: 2016-12-11T01:38Z
Check the source to verify that this is the current version before use.

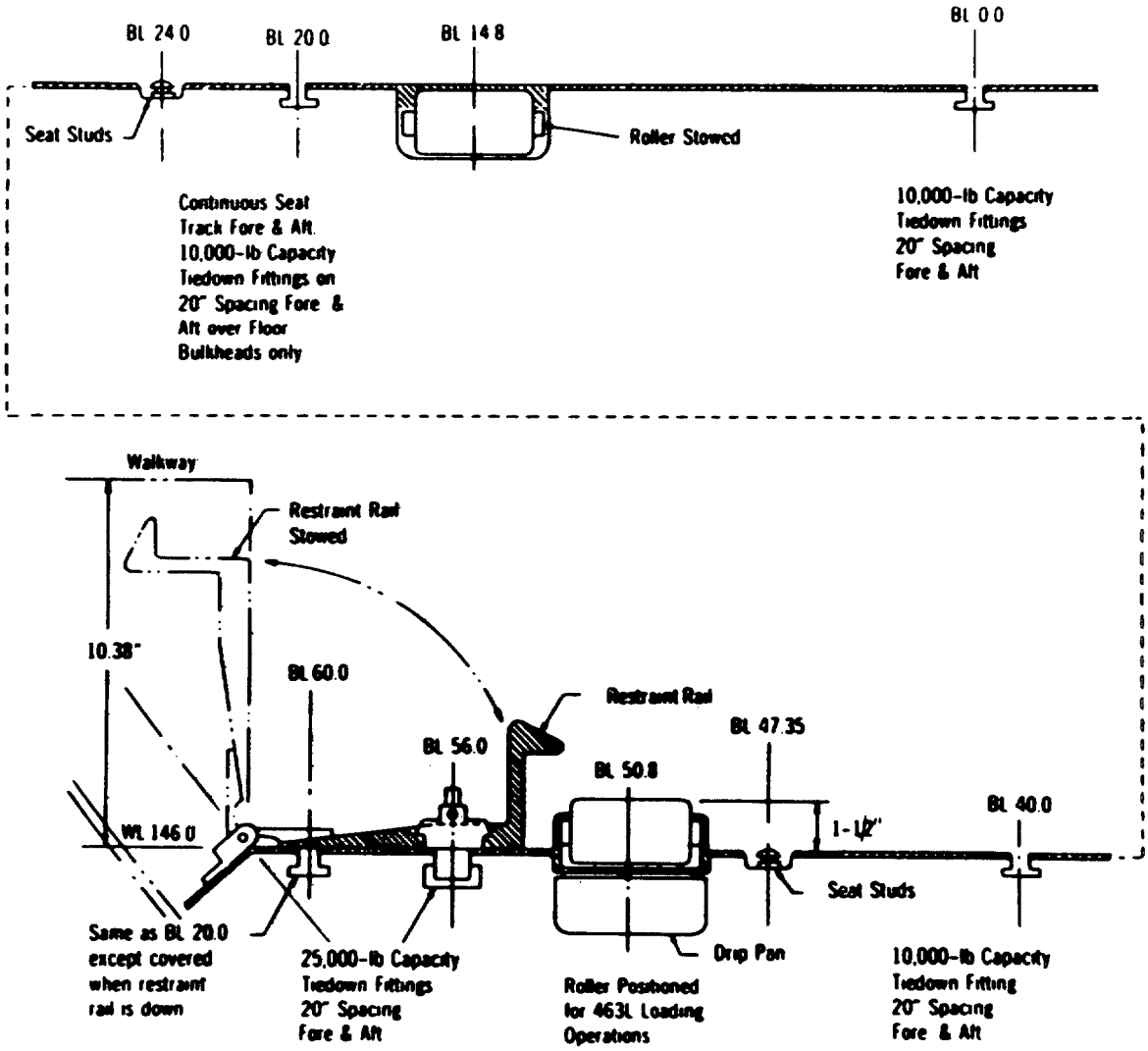

FIGURE 70. Cargo floor cross section.

Source: https://assist.dla.mil -- Downloaded: 2016-12-11T01:38Z
Check the source to verify that this is the current version before use.

ATTENTION CUSTOMER

MIL-STD-1791, dated 31 October 1985 contains figure 51, 71, 84, 87, 88, 89, 90,93 and 103 that are foldouts and cannot be supplied as part of this digital file at this time. If you require it please fax this information sheet with your complete mailing address and we will mail them to you. Our fax number is (215) 697-1462.

Mailing Address: _____

_____

_____

Please circle the foldout figure you require below:

Figure 51, page 245

Figure 71, page 269

Figure 84, page 282

Figure 87, page 285

Figure 88, page 286

Figure 89, page 287

Figure 90, page 288

Figure 93, page 293

Figure 103, page 304

Source: https://assist.dla.mil -- Downloaded: 2016-12-11T01:38Z
Check the source to verify that this is the current version before use.

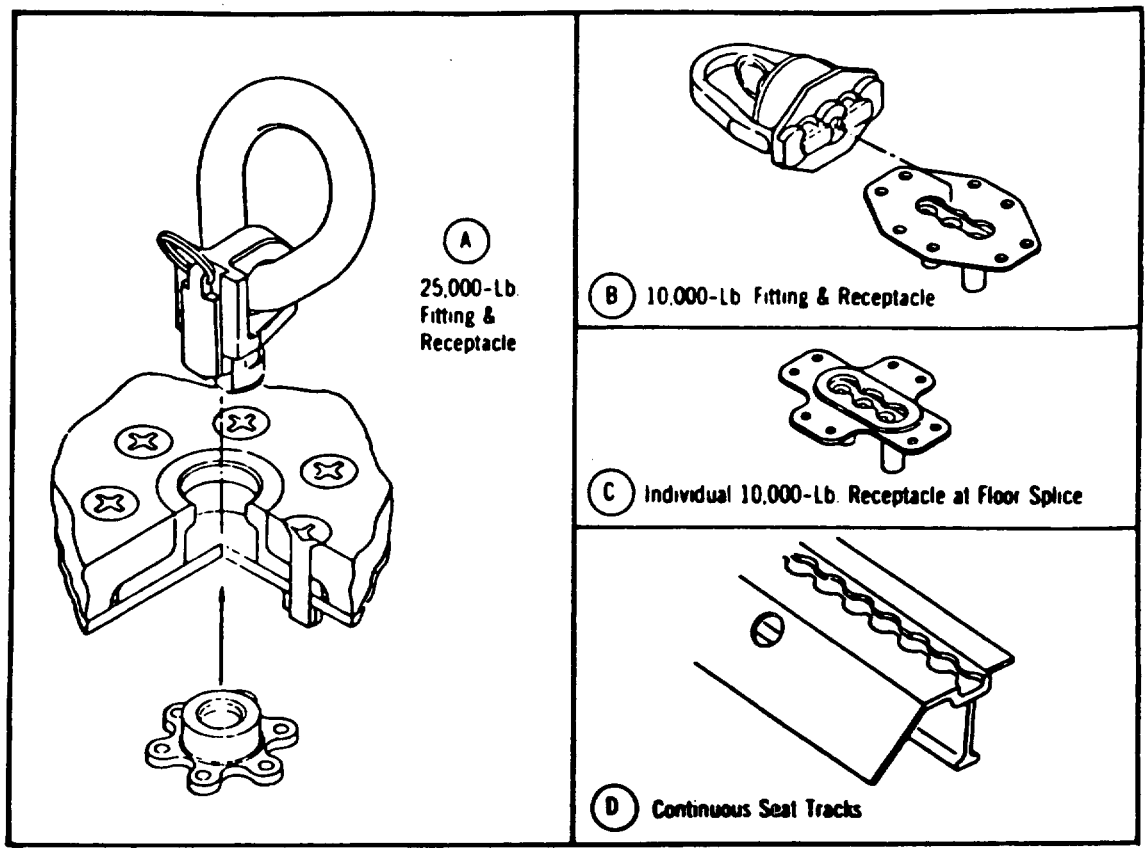

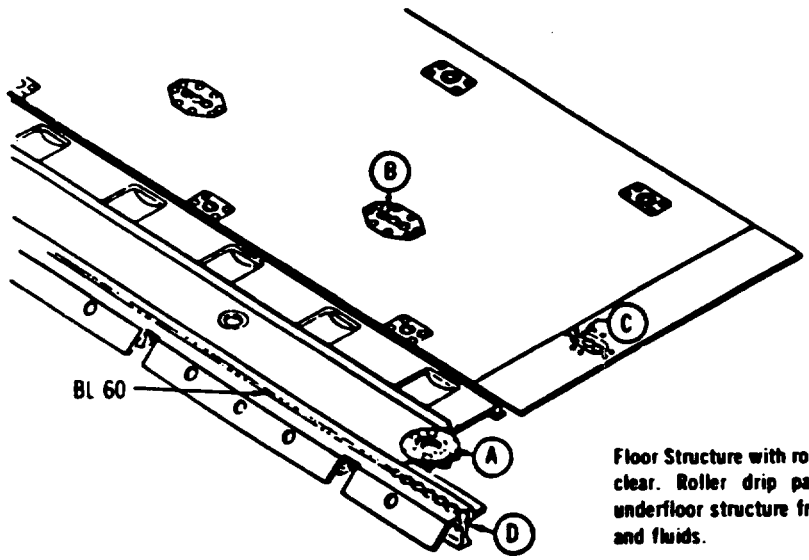

Floor Structure with roller trays lifted clear. Roller drip pans help keep underfloor structure free from debris and fluids.

FIGURE 72. Fittings and receptacles.

Source: https://assist.dla.mil -- Downloaded: 2016-12-11T01:38Z
Check the source to verify that this is the current version before use.

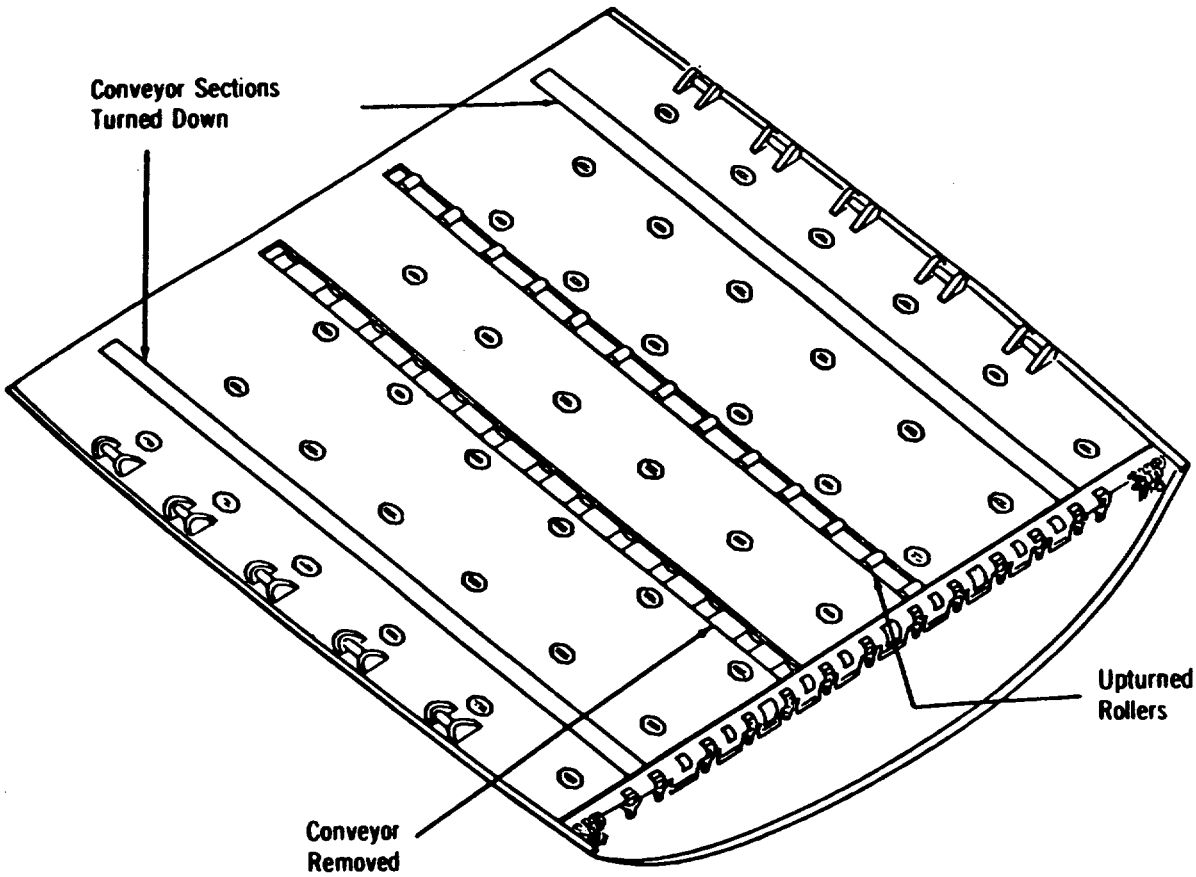

FIGURE 73. Integral cargo ramp.

Source: https://assist.dla.mil -- Downloaded: 2016-12-11T01:38Z
Check the source to verify that this is the current version before use.

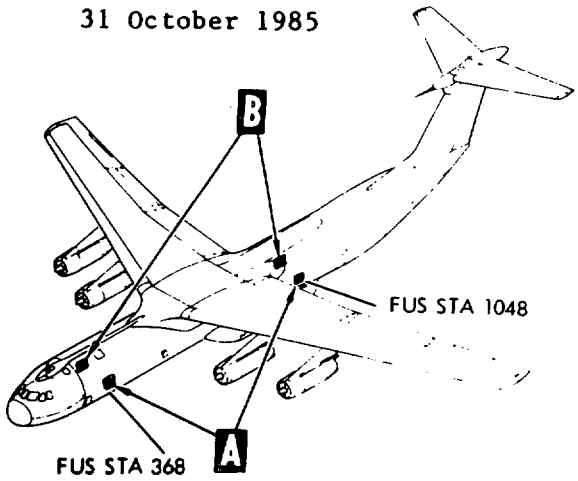

WARNING

DO NOT CONNECT EXHAUSTS FROM LOW TEMPERATURE MATERIALS TO THE RIGHT SIDE VENTS OR EXHAUSTS FROM OPERATING ENGINES TO THE LEFT SIDE VENTS. CONNECTION OF A LOW TEMPERATURE EXHAUST TO A VENT CONTAMINATED WITH OIL OR GREASE MAY CAUSE AN EXPLOSION.

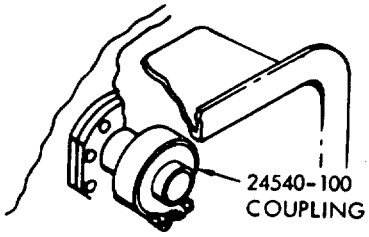

A
LEFT VENT

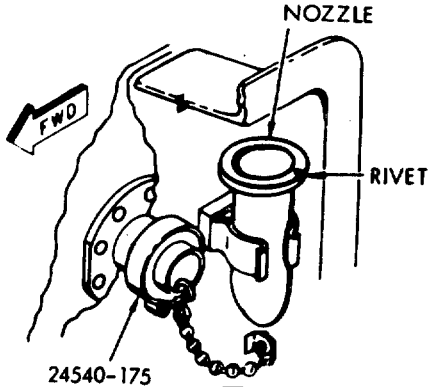

B
RIGHT VENT

DATA FOR MAKING FLARE TO MATE WITH AIRCRAFT VENT SYSTEM

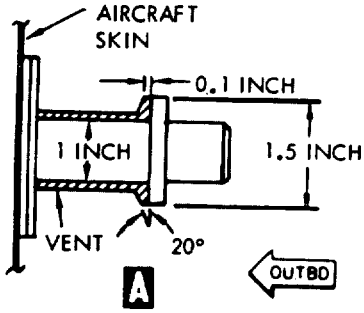

A
LEFT VENT SECTION VIEW;
PLUG AND COUPLING NOT SHOWN.

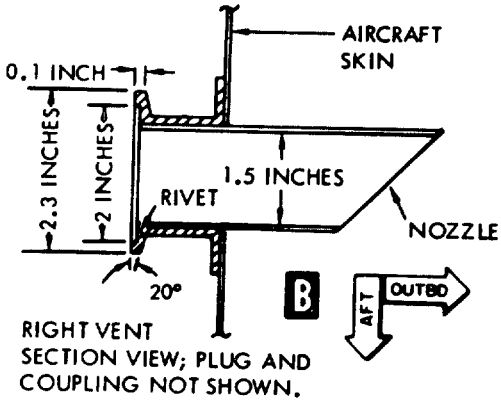

B
RIGHT VENT
SECTION VIEW; PLUG AND
COUPLING NOT SHOWN.

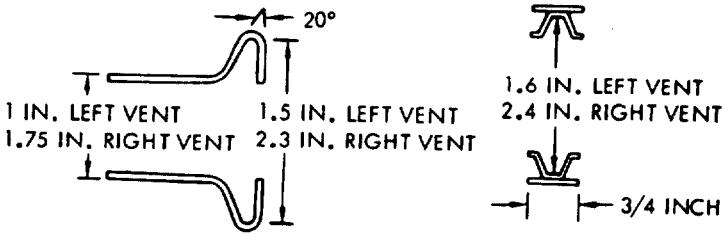

FIGURE 74. Cargo compartment vents.

Source: https://assist.dla.mil -- Downloaded: 2016-12-11T01:38Z
Check the source to verify that this is the current version before use.

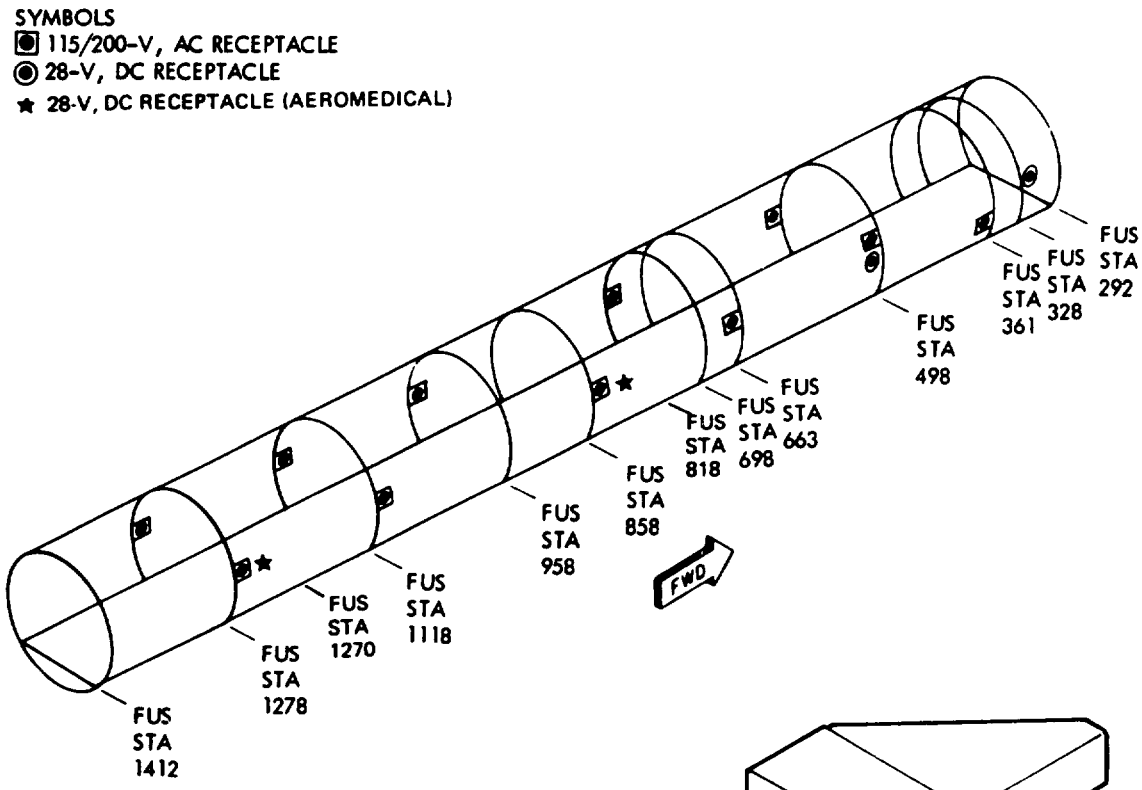

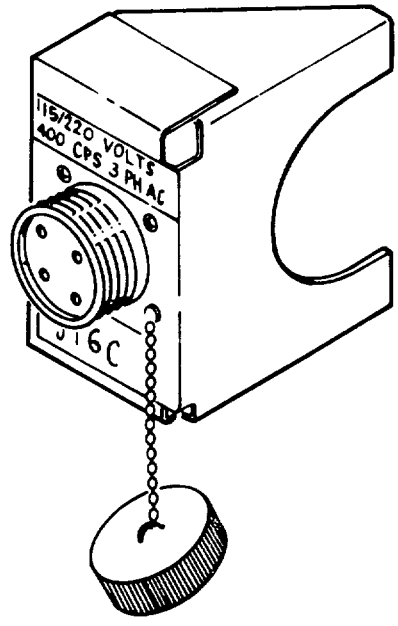

TYPICAL AC RECEPTACLE

FIGURE 75. Cargo compartment electrical receptacles.

Source: https://assist.dla.mil -- Downloaded: 2016-12-11T01:38Z
Check the source to verify that this is the current version before use.

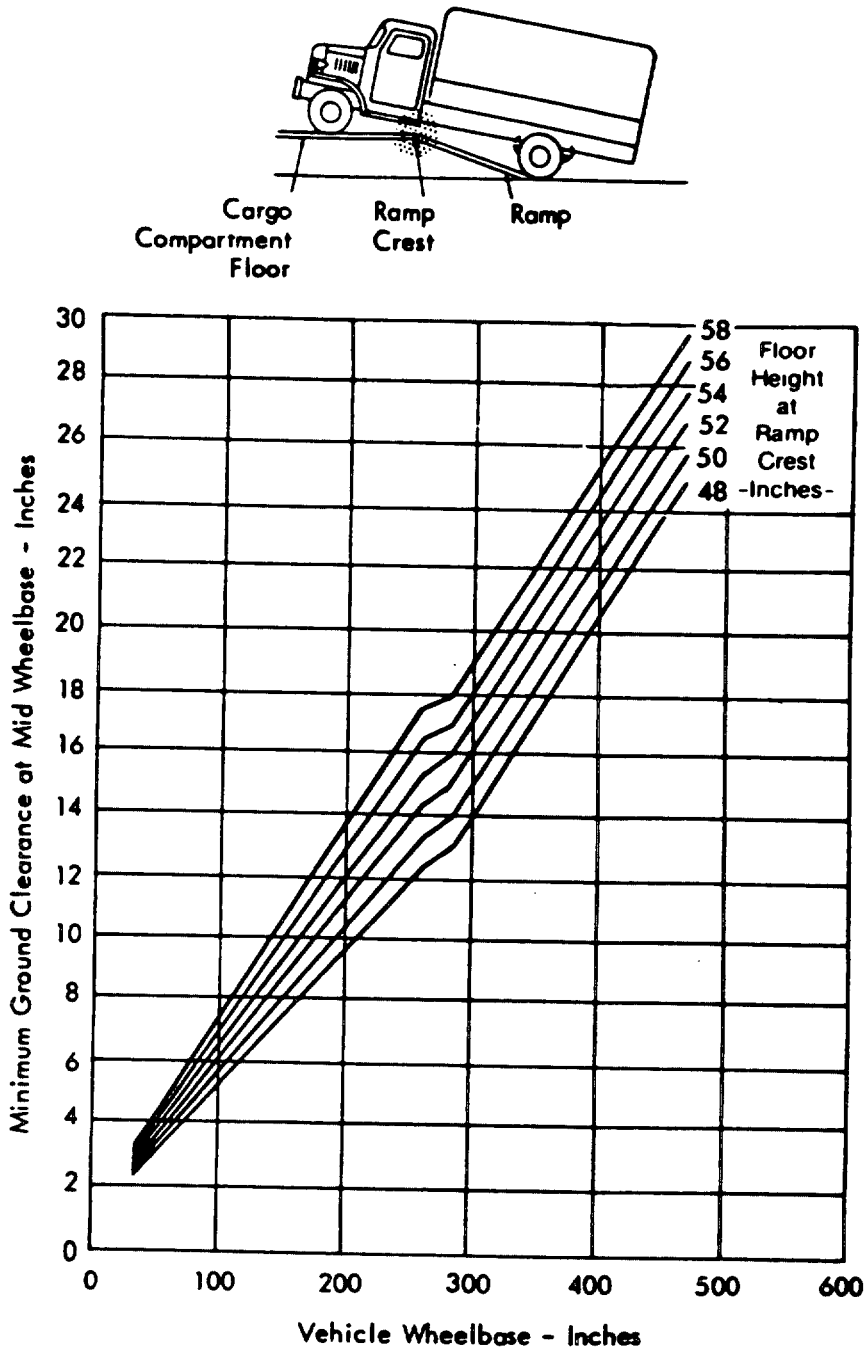

Note: This does not apply to straight-in loading (ramp horizontal).

FIGURE 76. Wheeled vehicle underside clearance.

Source: https://assist.dla.mil -- Downloaded: 2016-12-11T01:38Z
Check the source to verify that this is the current version before use.

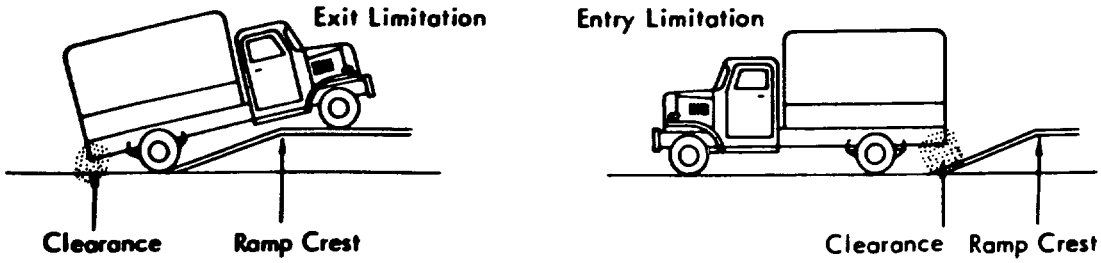

1. If overhang ratio is less than 3.6, there is no entry limitation onto the ramp.

2. The graph on the right shows exit limitation of the overhang striking the ground as the vehicle comes down the ramp.

Note: This does not apply to straight-in loading with ramp horizontal.

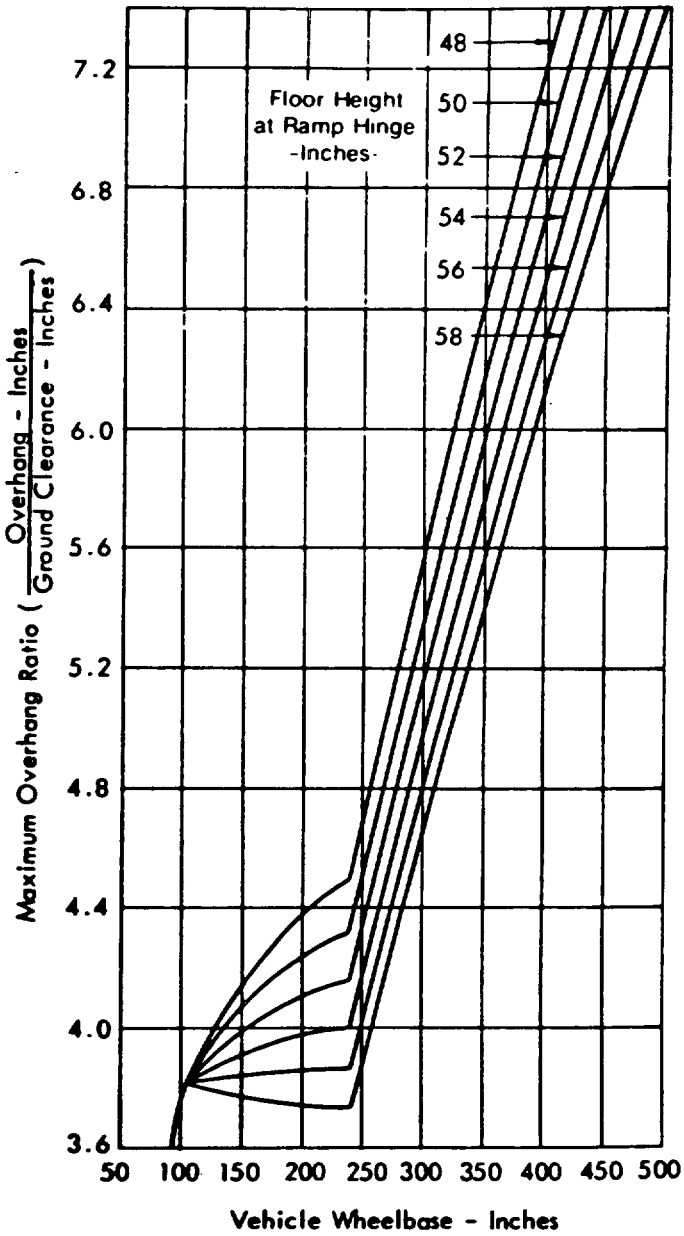

FIGURE 77. Vehicle overhang clearance.

Source: https://assist.dla.mil -- Downloaded: 2016-12-11T01:38Z
Check the source to verify that this is the current version before use.

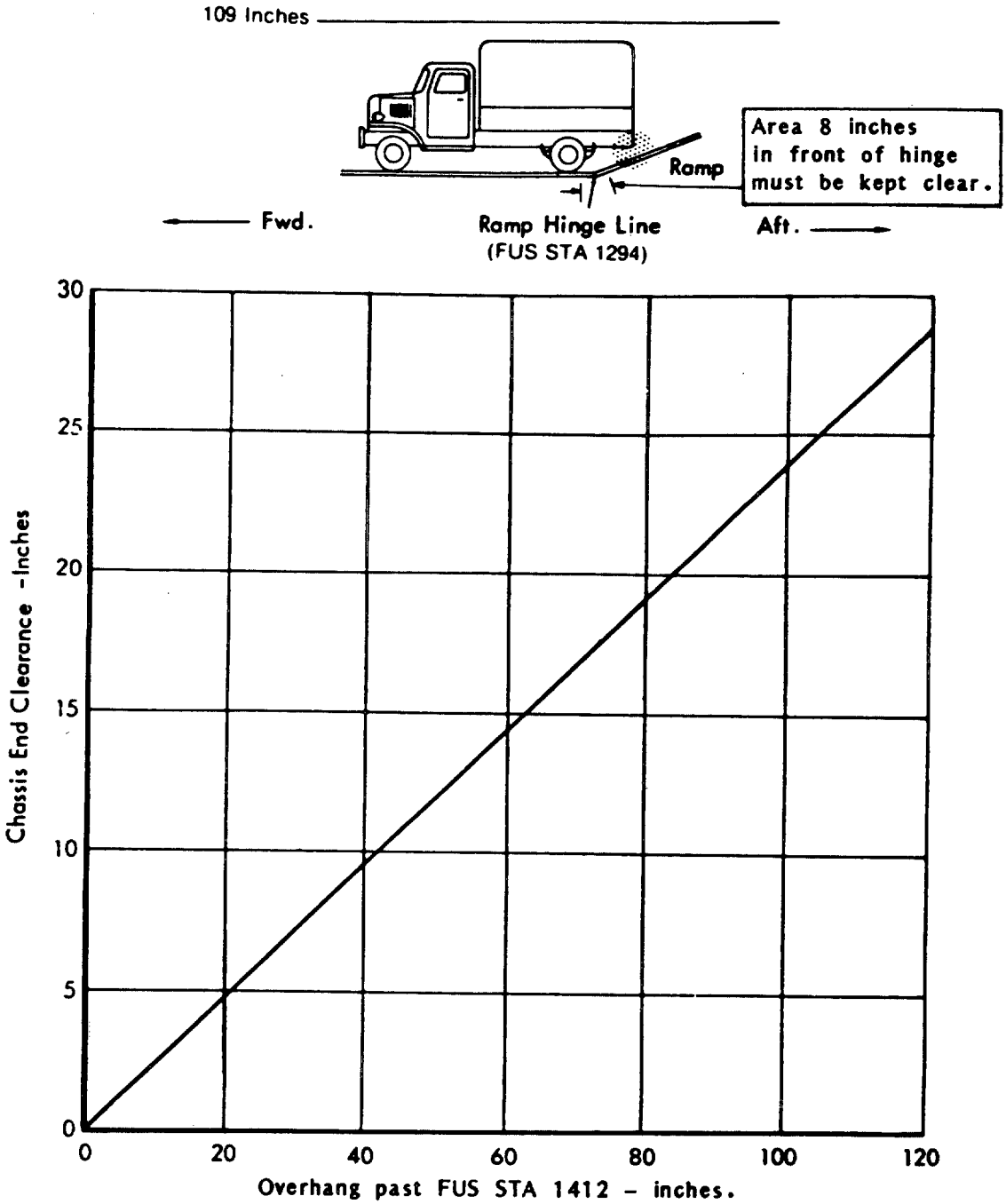

This chart also allows for 1-in. remaining clearance under static load conditions after the ramp has closed.

FIGURE 78. Ramp overhang vehicle clearance.

Source: https://assist.dla.mil -- Downloaded: 2016-12-11T01:38Z
Check the source to verify that this is the current version before use.

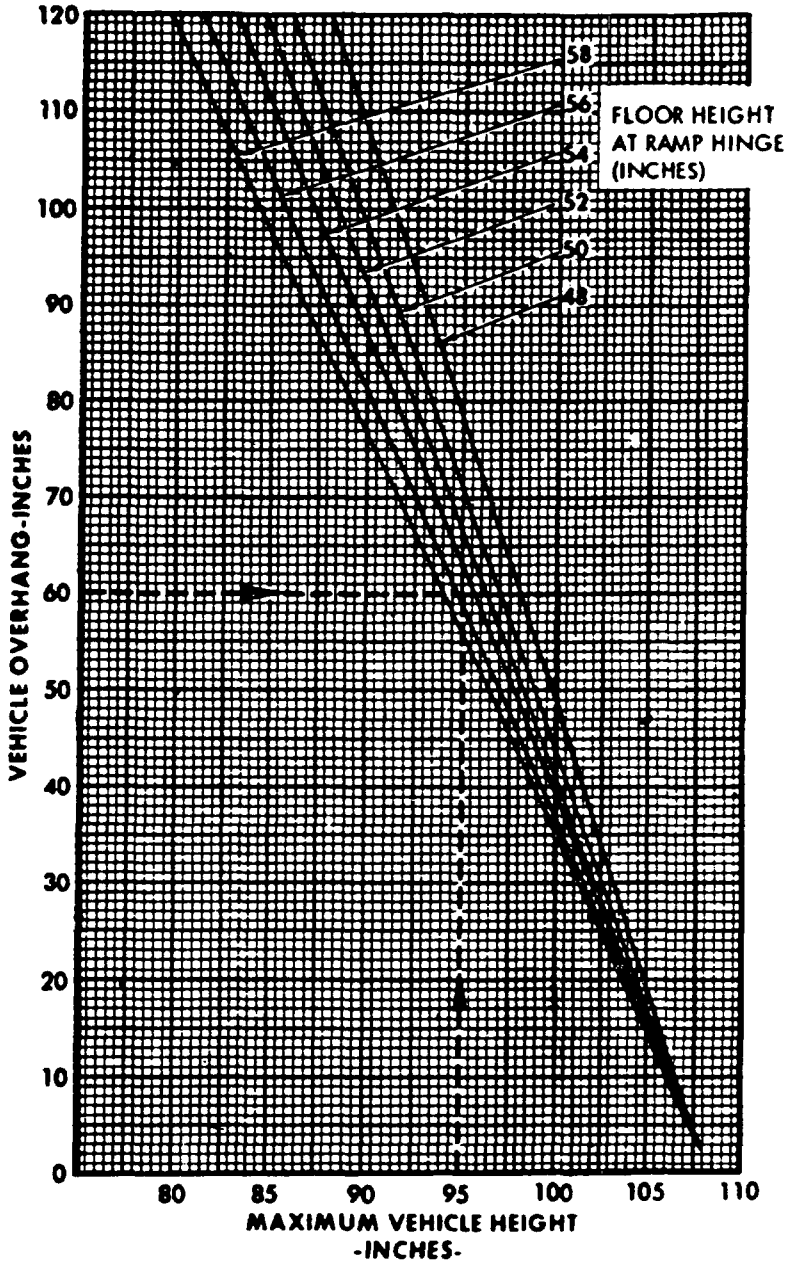

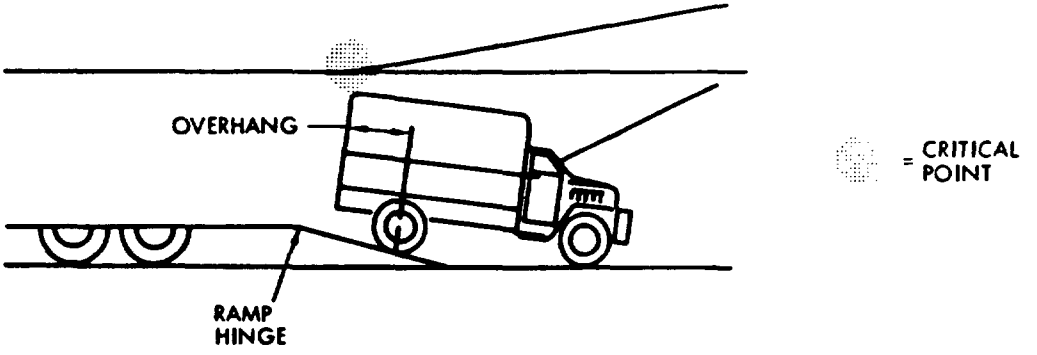

FIGURE 79. Vehicle projection limits.

Source: https://assist.dla.mil -- Downloaded: 2016-12-11T01:38Z
Check the source to verify that this is the current version before use.

CARGO LOADING LIMITS B

NOTE

1. The C.G. of the cargo load should fall within the limits shown in the chart. Final loading must be checked for the particular aircraft using the weight and balance data, T.O. 1-1B-40.

2. Details concerning the loading of cargo are contained in "Cargo Loading Manual" T.O. 1C-141B-9.

3. Loadings forward of this line may result in higher than normal stick force gradient during aerial refual operations until the fuel is redistributed to normal sequence.

4. Forward limit for the aft end of the most forward palletized load to be airdropped – Fuselage Station 696.

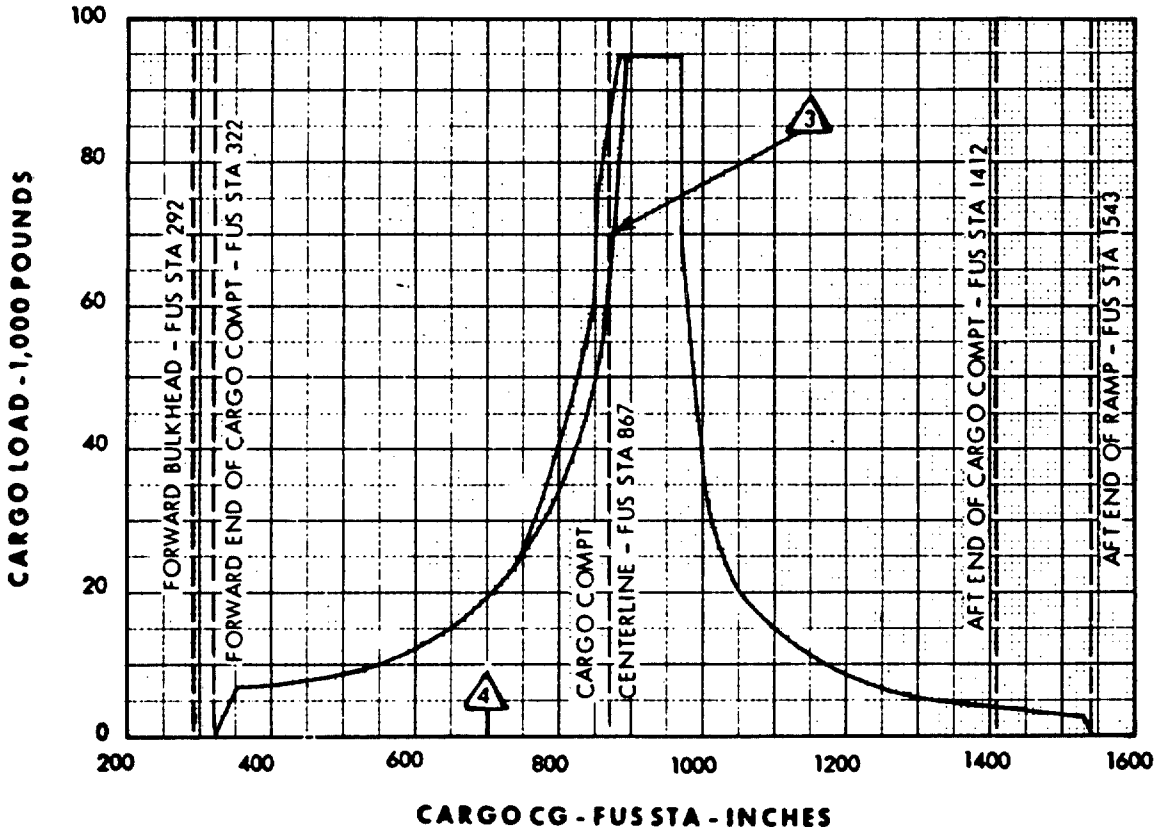

FIGURE 80. Cargo loading limits.

Source: https://assist.dla.mil -- Downloaded: 2016-12-11T01:38Z
Check the source to verify that this is the current version before use.

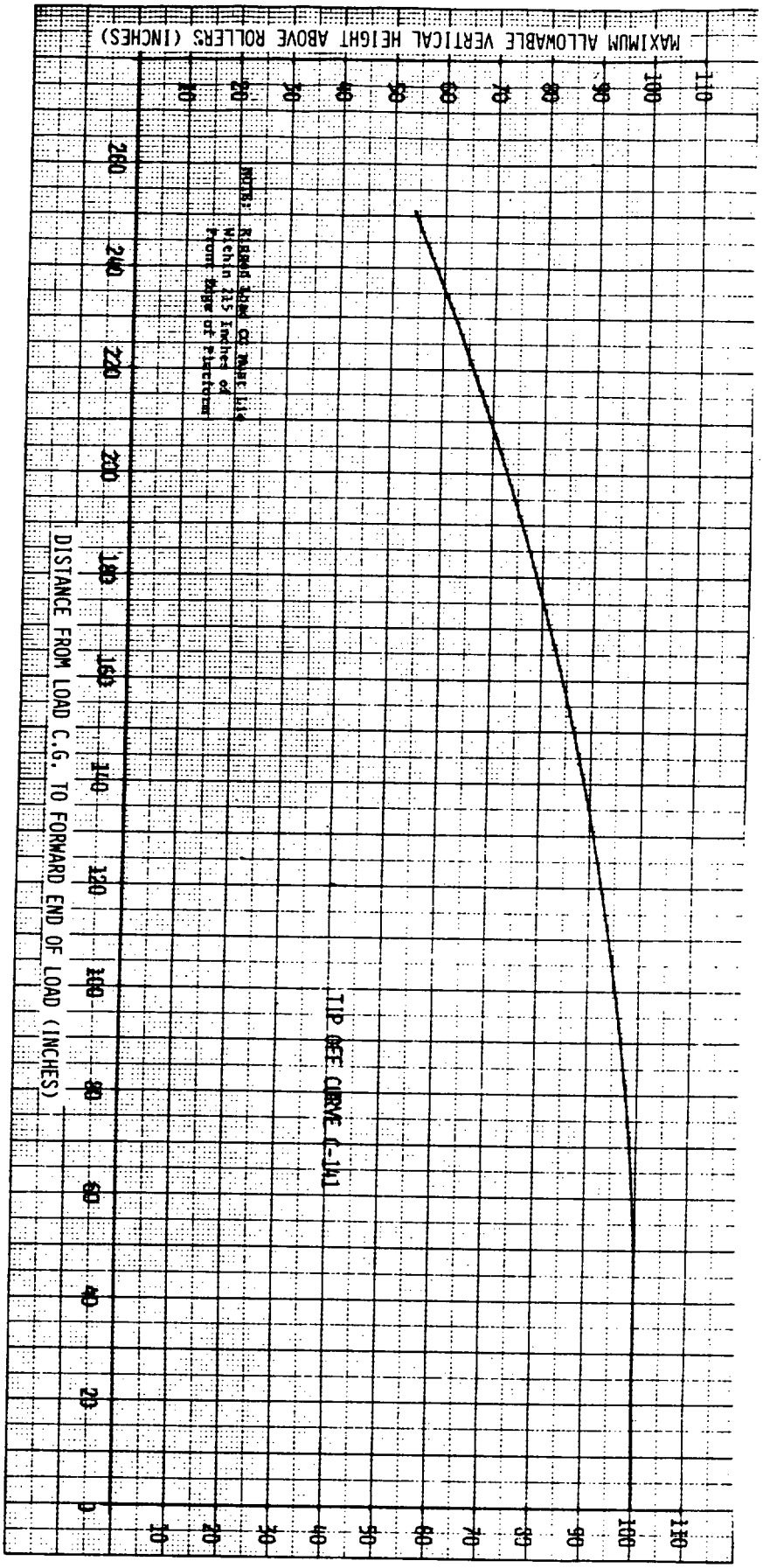

FIGURE 81. C-141 Tip off curve.

Source: https://assist.dla.mil -- Downloaded: 2016-12-11T01:38Z
Check the source to verify that this is the current version before use.

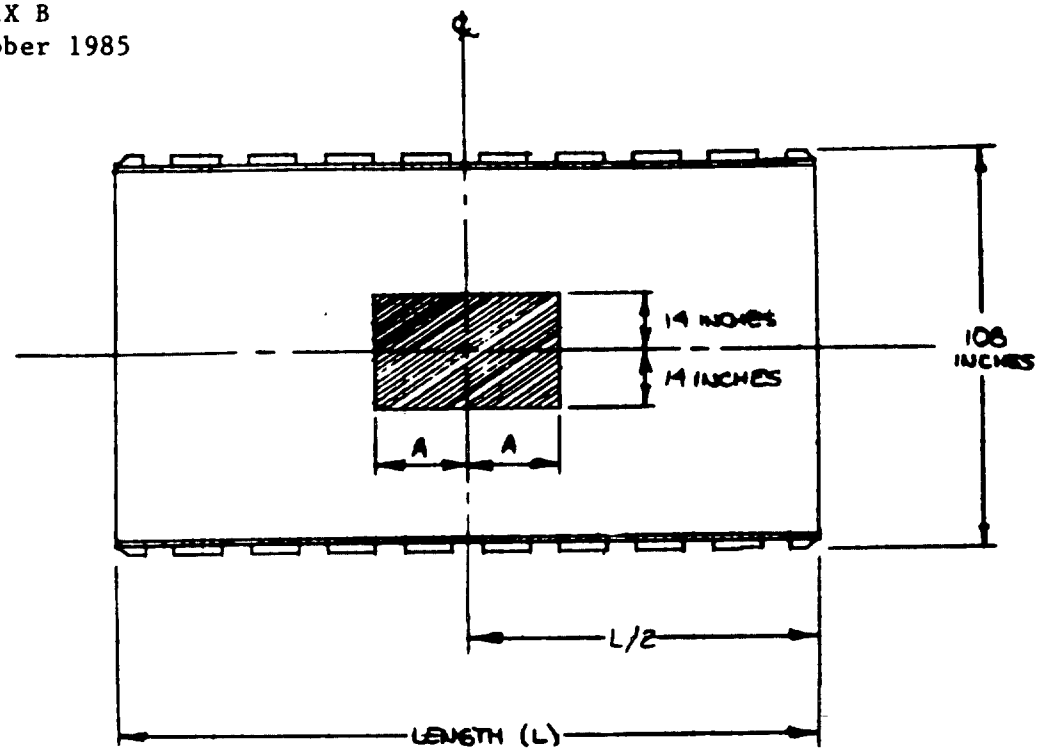

PLATFORM LENGTH (L)	DIMENSION A
8 feet	18.0 inches
12 feet	19.5 inches
16 feet	21.0 inches
20 feet	22.5 inches
24 feet	24.0 inches
28 feet	48.0 inches*
32 feet	72.0 inches*

* The center of gravity cannot exceed 190 and 209 inches from the forward end of the airdrop platform for the C-130 and C-141 respectively.

FIGURE 82. Aerial delivery system platform CG limits.

Source: https://assist.dla.mil -- Downloaded: 2016-12-11T01:38Z
Check the source to verify that this is the current version before use.

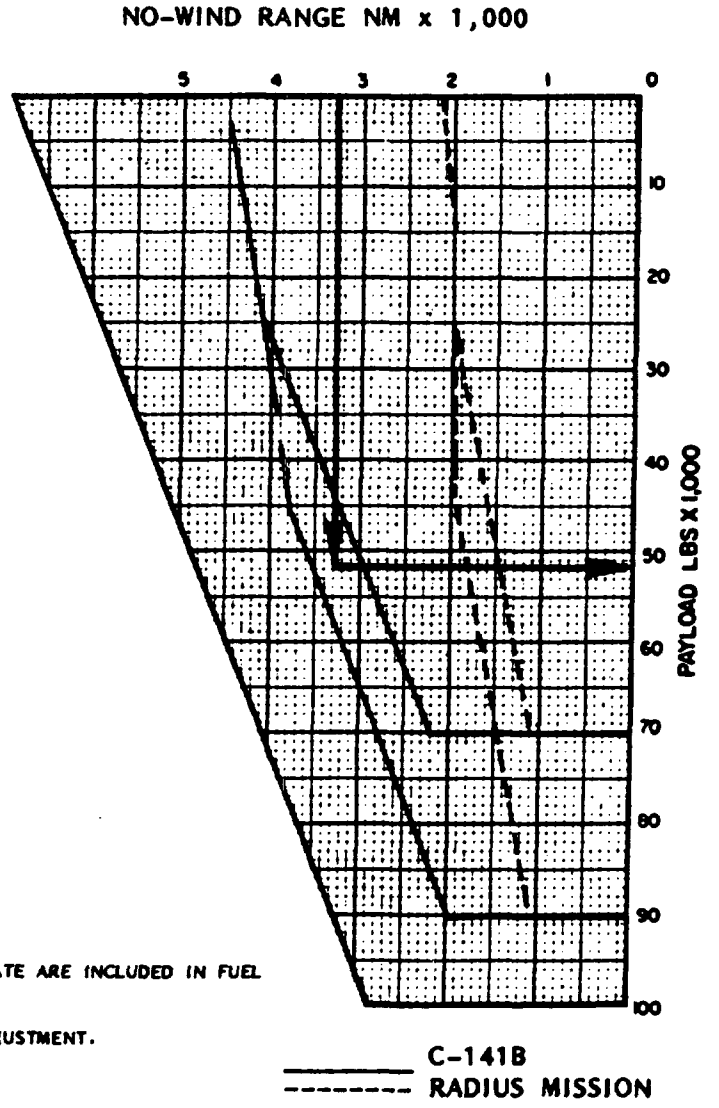

EXAMPLE:
DOVER - MILDENHALL
DISTANCE: 3295 NM
∴ NO WIND PAYLOAD: 51,700 LB

NOTES

1. MAC OVERWATER RESERVES AND A 30 MINUTE ALTERNATE ARE INCLUDED IN FUEL REQUIREMENTS FOR C-141.

2. C-141B FUEL LOAD INCLUDES A 10% PERFORMANCE ADJUSTMENT.

3. NO WIND RANGE = $\frac{\text{GROUND DISTANCE X TAS}}{\text{TAS + WF}}$

TAS = 425 KTS FOR C-141B.

4. C-141B PROFILE:

	PAYLOAD	MAXIMUM FLT WT
NORMAL OPS		
	0-53,000	323,000
	53,001-69,925	314,200
CONTINGENCY OPS		
	0-72,900	343,000
	72,901-90,200	334,500

FIGURE 83. Aircraft performance data payload-range.

Source: https://assist.dla.mil -- Downloaded: 2016-12-11T01:38Z
Check the source to verify that this is the current version before use.

ATTENTION CUSTOMER

MIL-STD-1791, dated 31 October 1985 contains figure 51, 71, 84, 87, 88, 89, 90,93 and 103 that are foldouts and cannot be supplied as part of this digital file at this time. If you require it please fax this information sheet with your complete mailing address and we will mail them to you. Our fax number is (215) 697-1462.

Mailing Address: _____

_____

_____

Please circle the foldout figure you require below:

Figure 51, page 245

Figure 71, page 269

Figure 84, page 282

Figure 87, page 285

Figure 88, page 286

Figure 89, page 287

Figure 90, page 288

Figure 93, page 293

Figure 103, page 304

Source: https://assist.dla.mil -- Downloaded: 2016-12-11T01:38Z
Check the source to verify that this is the current version before use.

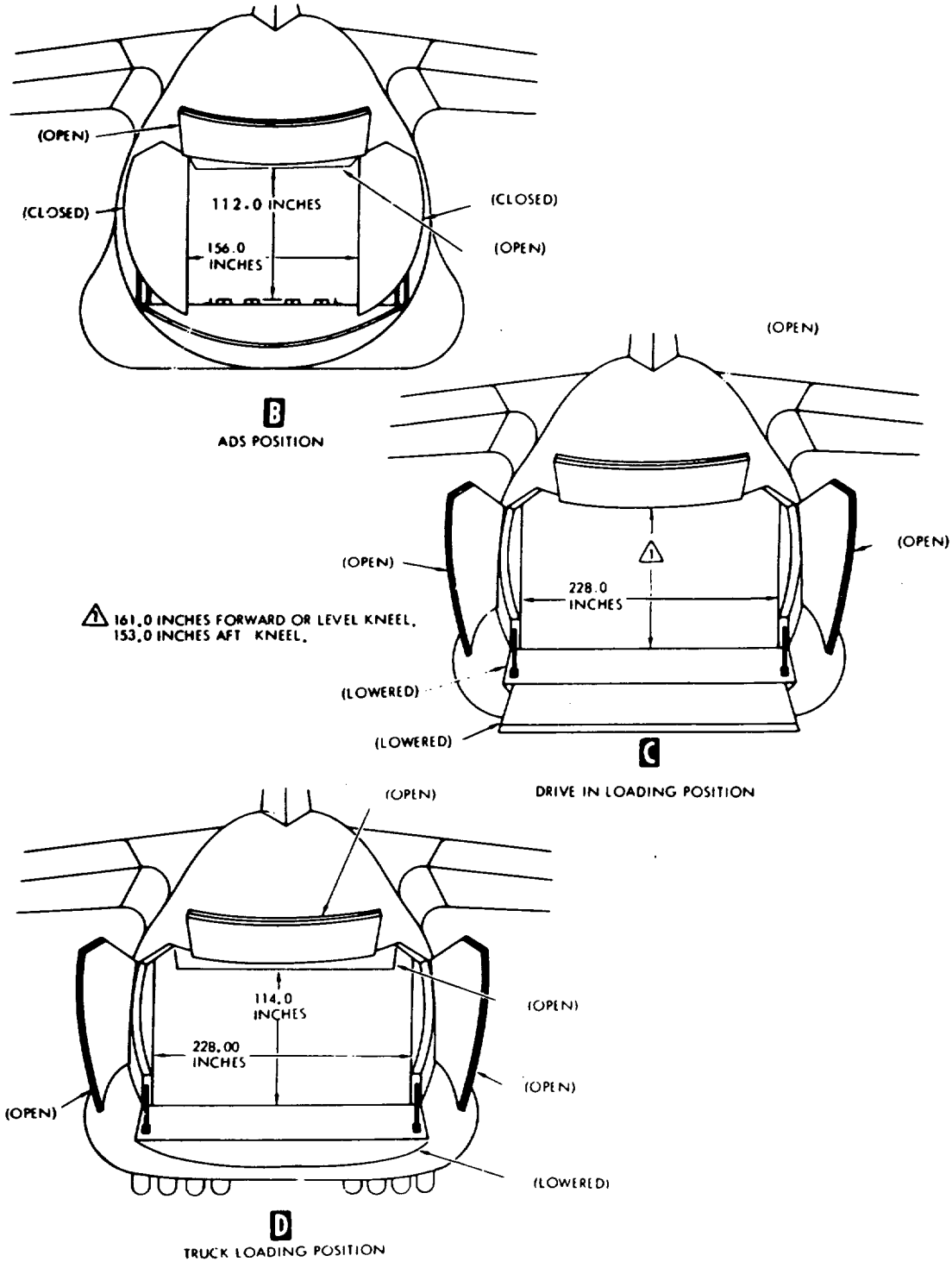

FIGURE 85. Aft cargo opening dimensions.

Source: https://assist.dla.mil -- Downloaded: 2016-12-11T01:38Z
Check the source to verify that this is the current version before use.

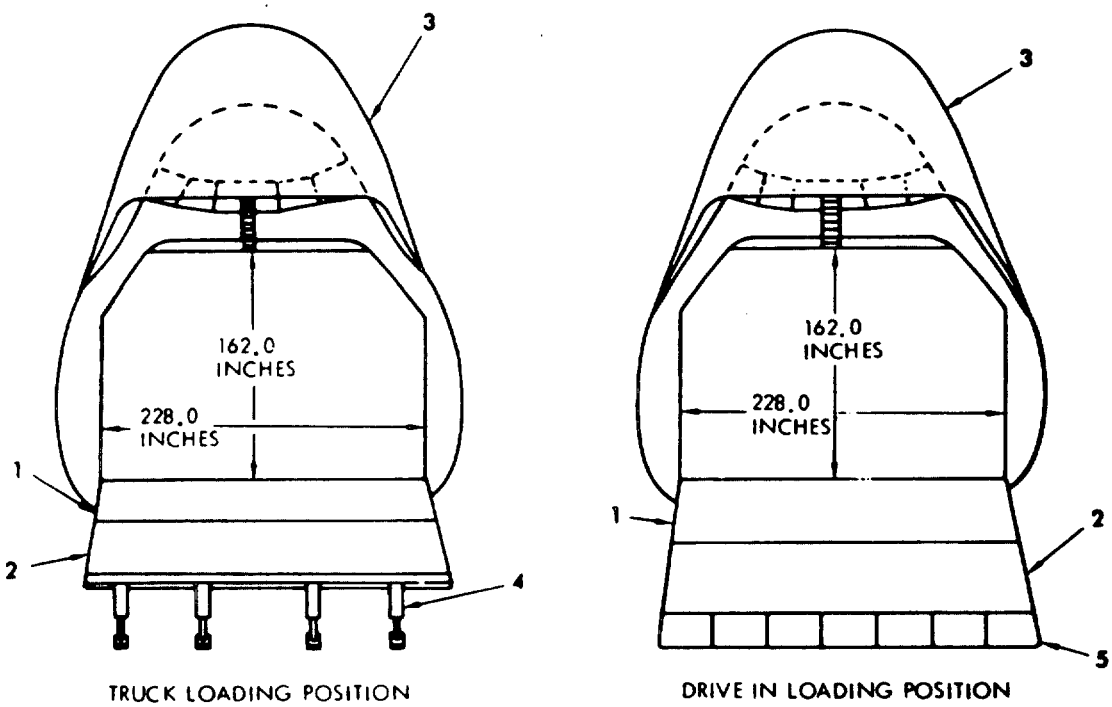

1. FORWARD RAMP
2. FORWARD RAMP EXTENSION
3. VISOR
4. FORWARD RAMP EXTENSION SUPPORT JACKS
5. FORWARD RAMP EXTENSION TOES

FIGURE 86. Forward cargo opening dimensions.

Source: https://assist.dla.mil -- Downloaded: 2016-12-11T01:38Z
Check the source to verify that this is the current version before use.

ATTENTION CUSTOMER

MIL-STD-1791, dated 31 October 1985 contains figure 51, 71, 84, 87, 88, 89, 90,93 and 103 that are foldouts and cannot be supplied as part of this digital file at this time. If you require it please fax this information sheet with your complete mailing address and we will mail them to you. Our fax number is (215) 697-1462.

Mailing Address: _____

_____

_____

Please circle the foldout figure you require below:

Figure 51, page 245

Figure 71, page 269

Figure 84, page 282

Figure 87, page 285

Figure 88, page 286

Figure 89, page 287

Figure 90, page 288

Figure 93, page 293

Figure 103, page 304

Source: https://assist.dla.mil -- Downloaded: 2016-12-11T01:38Z
Check the source to verify that this is the current version before use.

ATTENTION CUSTOMER

MIL-STD-1791, dated 31 October 1985 contains figure 51, 71, 84, 87, 88, 89, 90,93 and 103 that are foldouts and cannot be supplied as part of this digital file at this time. If you require it please fax this information sheet with your complete mailing address and we will mail them to you. Our fax number is (215) 697-1462.

Mailing Address: _____

_____

_____

Please circle the foldout figure you require below:

Figure 51, page 245

Figure 71, page 269

Figure 84, page 282

Figure 87, page 285

Figure 88, page 286

Figure 89, page 287

Figure 90, page 288

Figure 93, page 293

Figure 103, page 304

Source: https://assist.dla.mil -- Downloaded: 2016-12-11T01:38Z
Check the source to verify that this is the current version before use.

ATTENTION CUSTOMER

MIL-STD-1791, dated 31 October 1985 contains figure 51, 71, 84, 87, 88, 89, 90,93 and 103 that are foldouts and cannot be supplied as part of this digital file at this time. If you require it please fax this information sheet with your complete mailing address and we will mail them to you. Our fax number is (215) 697-1462.

Mailing Address: _____

_____

_____

Please circle the foldout figure you require below:

Figure 51, page 245

Figure 71, page 269

Figure 84, page 282

Figure 87, page 285

Figure 88, page 286

Figure 89, page 287

Figure 90, page 288

Figure 93, page 293

Figure 103, page 304

Source: https://assist.dla.mil -- Downloaded: 2016-12-11T01:38Z
Check the source to verify that this is the current version before use.

ATTENTION CUSTOMER

MIL-STD-1791, dated 31 October 1985 contains figure 51, 71, 84, 87, 88, 89, 90,93 and 103 that are foldouts and cannot be supplied as part of this digital file at this time. If you require it please fax this information sheet with your complete mailing address and we will mail them to you. Our fax number is (215) 697-1462.

Mailing Address: _____

_____

_____

Please circle the foldout figure you require below:

Figure 51, page 245

Figure 71, page 269

Figure 84, page 282

Figure 87, page 285

Figure 88, page 286

Figure 89, page 287

Figure 90, page 288

Figure 93, page 293

Figure 103, page 304

Source: https://assist.dla.mil -- Downloaded: 2016-12-11T01:38Z
Check the source to verify that this is the current version before use.

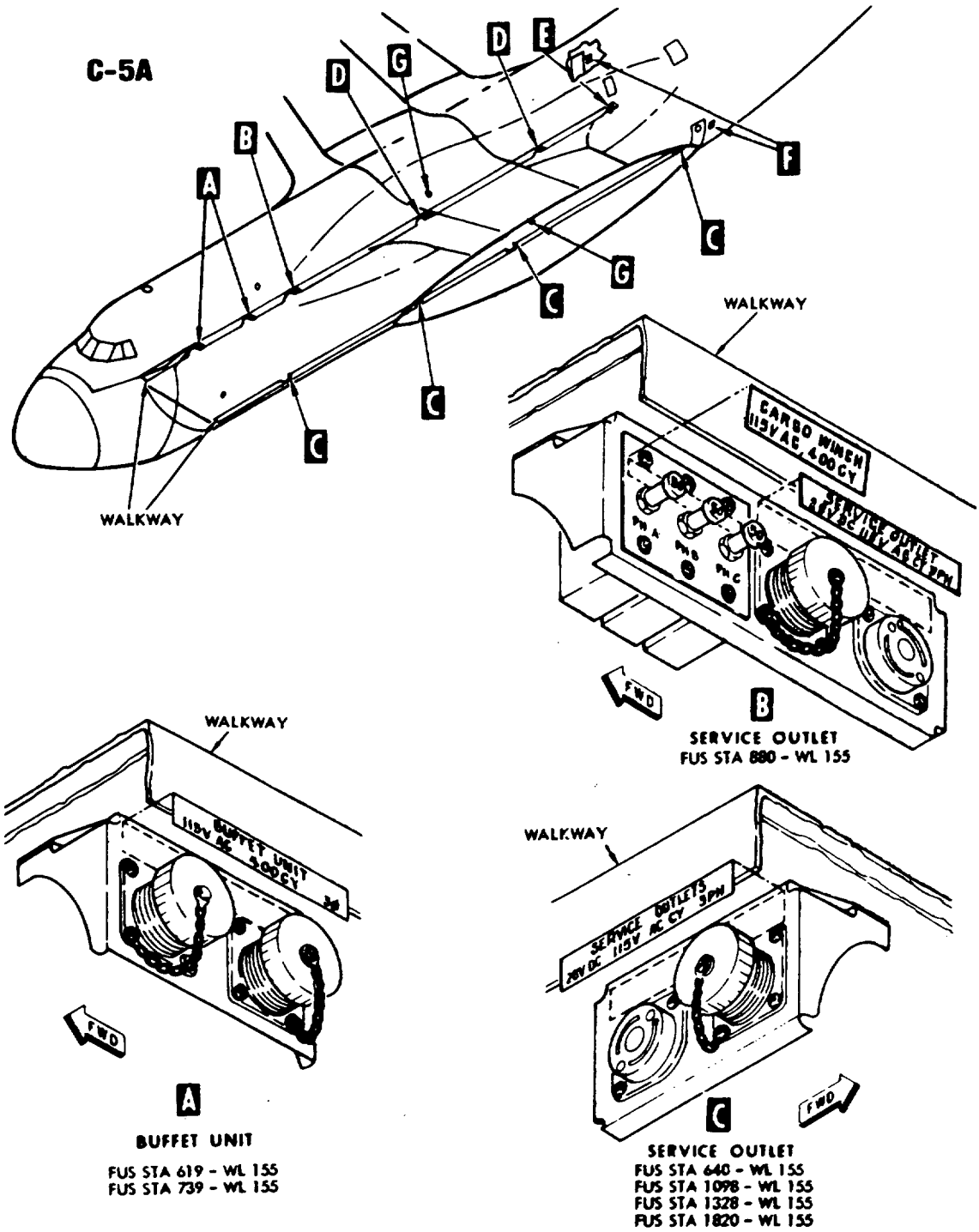

FIGURE 91. Cargo compartment electrical outlets.

Source: https://assist.dla.mil -- Downloaded: 2016-12-11T01:38Z
Check the source to verify that this is the current version before use.

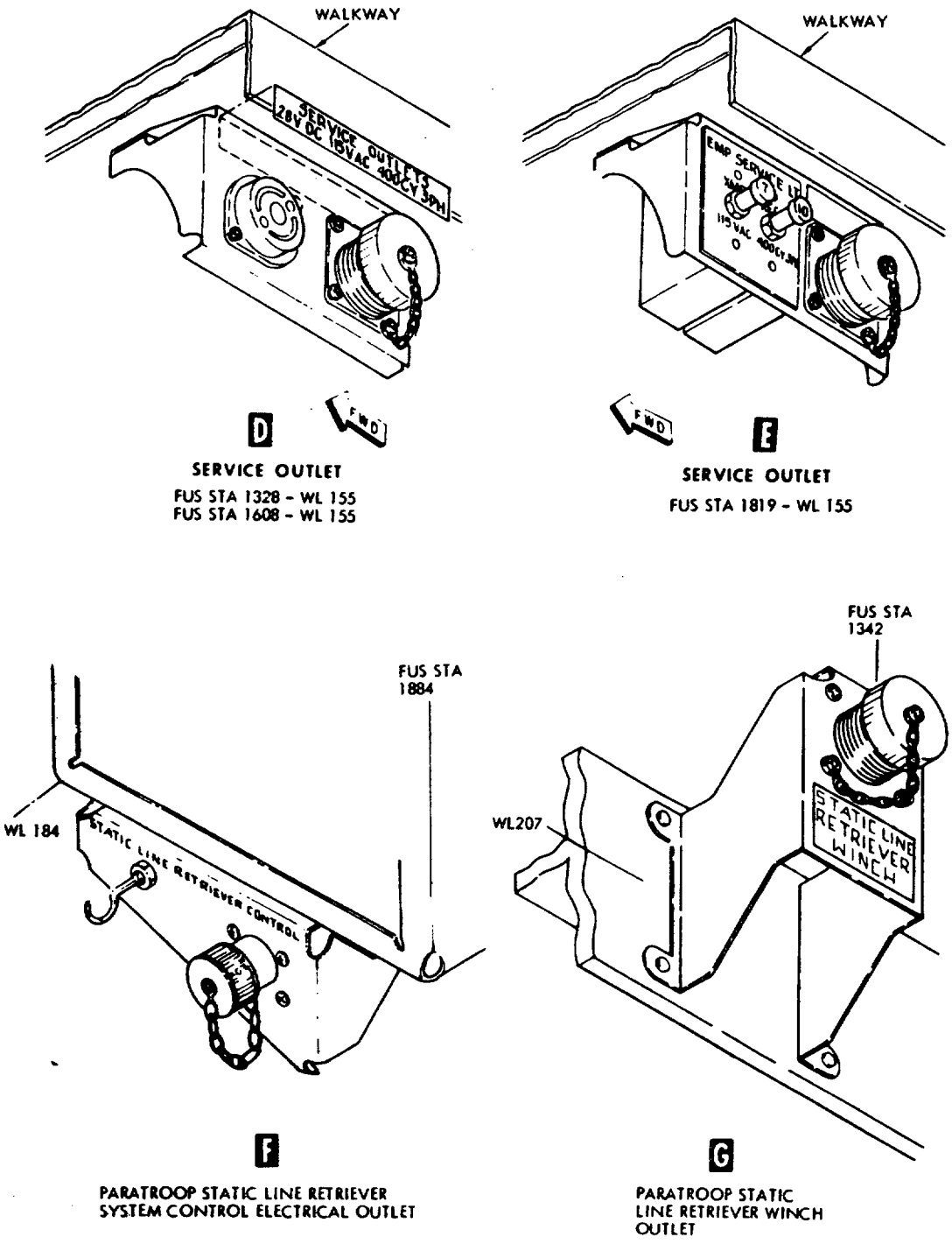

FIGURE 91. Cargo compartment electrical outlets. (continued)

Source: https://assist.dla.mil -- Downloaded: 2016-12-11T01:38Z
Check the source to verify that this is the current version before use.

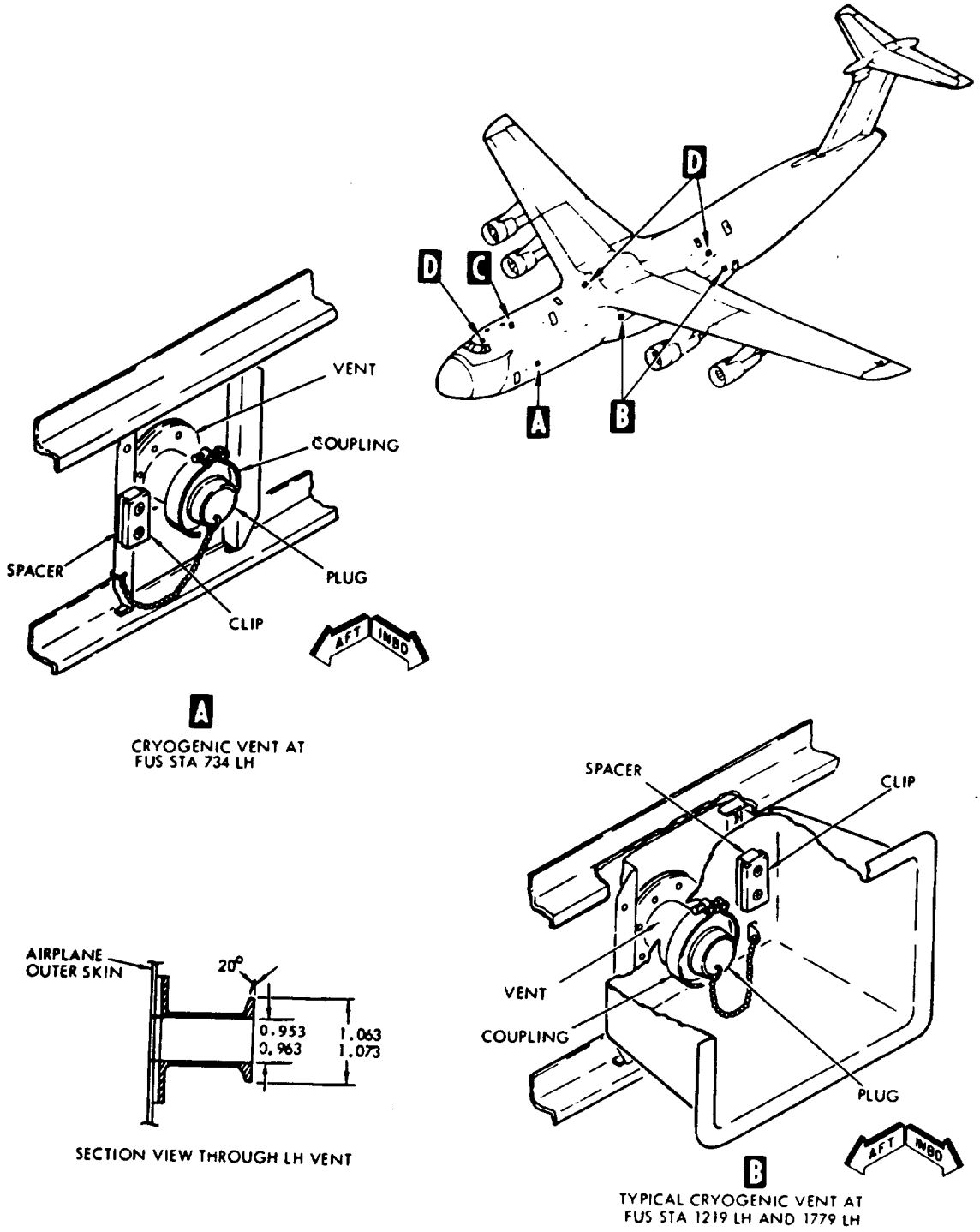

FIGURE 92. Cargo compartment vents.

Source: https://assist.dla.mil -- Downloaded: 2016-12-11T01:38Z
Check the source to verify that this is the current version before use.

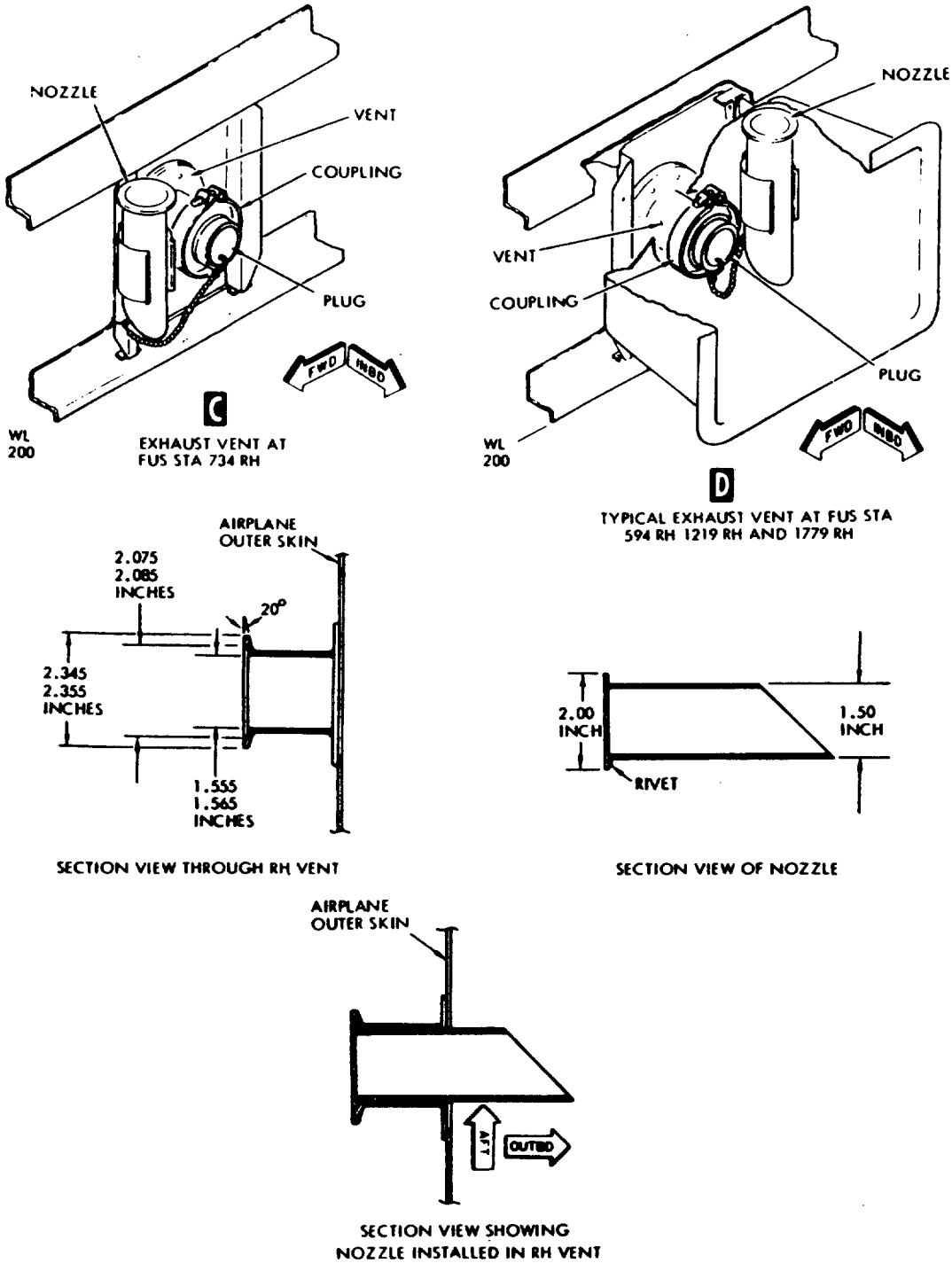

FIGURE 92. Cargo compartment vents. (continued)

Source: https://assist.dla.mil -- Downloaded: 2016-12-11T01:38Z
Check the source to verify that this is the current version before use.

ATTENTION CUSTOMER

MIL-STD-1791, dated 31 October 1985 contains figure 51, 71, 84, 87, 88, 89, 90,93 and 103 that are foldouts and cannot be supplied as part of this digital file at this time. If you require it please fax this information sheet with your complete mailing address and we will mail them to you. Our fax number is (215) 697-1462.

Mailing Address: _____

_____

_____

Please circle the foldout figure you require below:

Figure 51, page 245

Figure 71, page 269

Figure 84, page 282

Figure 87, page 285

Figure 88, page 286

Figure 89, page 287

Figure 90, page 288

Figure 93, page 293

Figure 103, page 304

Source: https://assist.dla.mil -- Downloaded: 2016-12-11T01:38Z
Check the source to verify that this is the current version before use.

MINIMUM FORWARD AND AFT DISTANCE BETWEEN A LONGITUDINAL ROW OF AXLES
VS
AXLE WEIGHTS

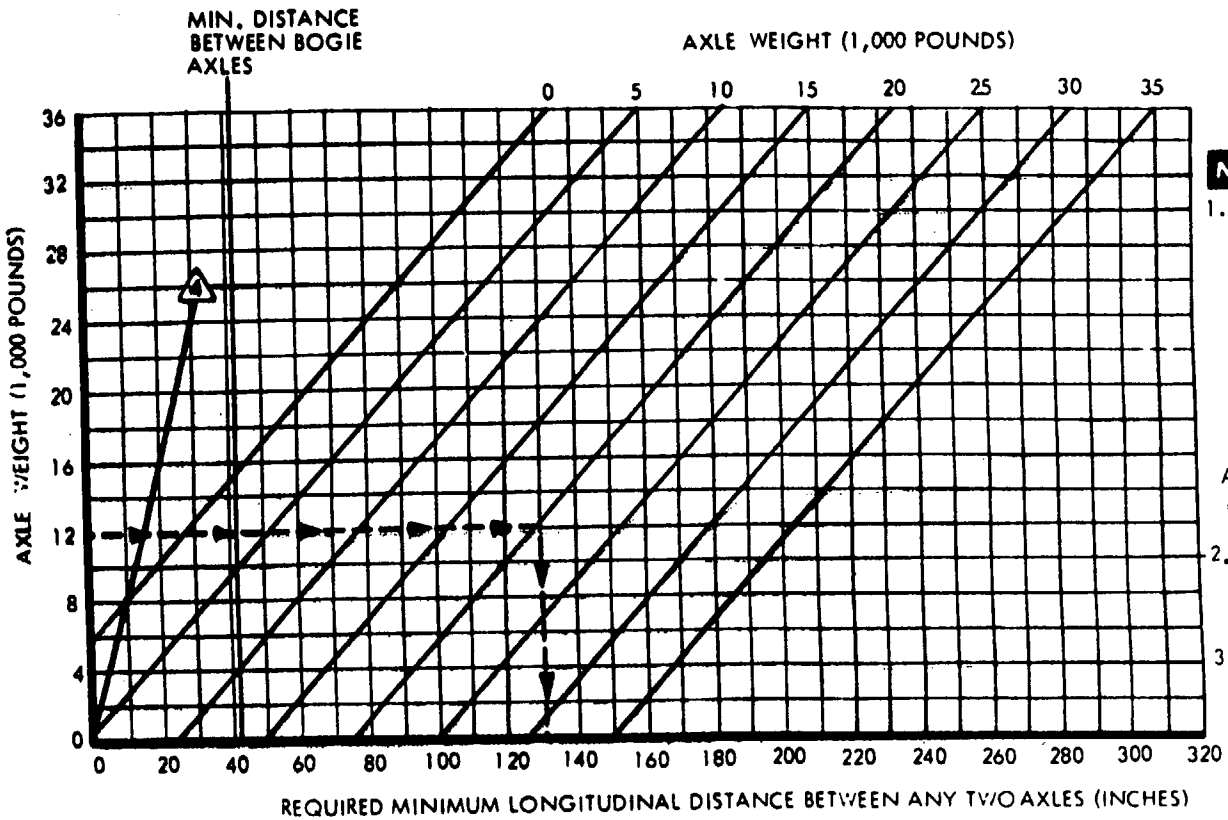

NOTE

1. DIMENSION GIVEN IS FOR DISTANCE "X" AS SHOWN BELOW.

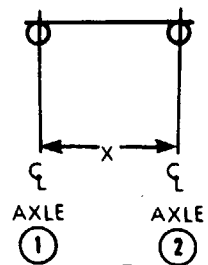

2. AXLE 1 AND AXLE 2 MAY BE ON SAME VEHICLE OR DIFFERENT VEHICLES.
3. IF BOTH AXLES ON A BOGIE ARE NOT OF EQUAL WEIGHT, USE HEAVIEST AXLE WEIGHT IN GRAPH.

4 MINIMUM REQUIRED DISTANCE BETWEEN TRACKED VEHICLE WHEELS.

CAUTION

A vehicle or vehicles on the same side or opposite sides of the airplane, with an actual distance between axles that is less than the required minimum longitudinal distance per the graph, shall be loaded and transported with its/their centerline(s) down BL 0. Failure to comply could result in structural damage.

FIGURE 94. Axle weight and spacing envelope.

Source: https://assist.dla.mil -- Downloaded: 2016-12-19T01:38Z
Check the source to verify that this is the current version before use.

ON OFF LOADING LIMITATIONS ACROSS FORWARD RAMP AND RAMP EXTENSION
TRUCK LOADING POSITION: RAMP ACTUATOR SUPPORTED
A. ONE 50,000 POUND PLATFORM B. TWO 40,000 POUND PLATFORMS SIDE BY SIDE. C. TWO 25,000 POUND AXLES IN TANDEM. D. MAXIMUM TRACKED VEHICLE WEIGHT 85,000 POUNDS. E. TRACKED VEHICLES EXCEEDING 62,000 POUNDS SHALL BE LOADED WITH CG AT BL 0 ± 7-INCHES. F. ONE 36,000 POUND AXLE. G. AXLES EXCEEDING 25,000 POUNDS SHALL BE LOADED WITH CG AT BL 0 ± 7-INCHES.

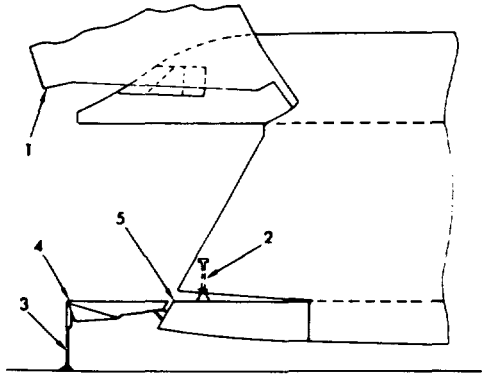

TRUCK LOADING POSITION

RAMP ACTUATOR SUPPORTED

ON/OFF LOADING LIMITATIONS ACROSS FORWARD RAMP AND RAMP EXTENSION
DRIVE IN LOADING POSITION: RAMP ACTUATOR SUPPORTED
A. TWO 25,000 POUND AXLES IN TANDEM. B. TWO 10,000 POUND PALLETS SIDE-BY-SIDE. C. MAXIMUM TRACKED VEHICLE WEIGHT 85,000 POUNDS. D. TRACKED VEHICLES EXCEEDING 62,000 POUNDS SHALL BE LOADED WITH CG AT BL 0 ± 7 INCHES. E. ONE 36,000 POUND AXLE. F. AXLES EXCEEDING 25,000 POUNDS SHALL BE LOADED WITH CG AT BL 0 ± 7 INCHES.

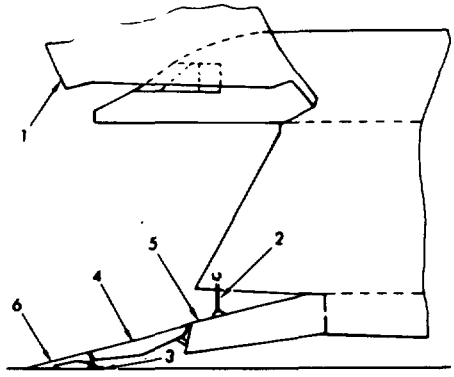

DRIVE IN LOADING POSITION

RAMP ACTUATOR SUPPORTED

ON OFF LOADING LIMITATIONS ACROSS FORWARD RAMP AND RAMP EXTENSION
DRIVE IN LOADING POSITION: RAMP GROUND SUPPORTED
A. TWO 25,000 POUND AXLES IN TANDEM. B. TWO 10,000 POUND PALLETS SIDE-BY-SIDE. C. MAXIMUM TRACKED VEHICLE WEIGHT 129,000 POUNDS. D. TRACKED VEHICLES EXCEEDING 112,000 POUNDS SHALL BE LOADED WITH CG AT BL 0 ± 7-INCHES. E. NO LOADING OF AIRDROP PLATFORMS IN GROUND SUPPORTED CONFIGURATION. F. ONE 36,000 POUND AXLE. G. AXLES EXCEEDING 25,000 POUNDS SHALL BE LOADED WITH CG AT BL 0 ± 7-INCHES.

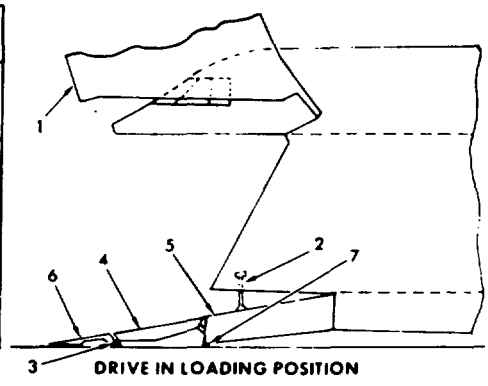

DRIVE IN LOADING POSITION

RAMP GROUND SUPPORTED

1. VISOR
2. RAMP ACTUATOR
3. FORWARD RAMP EXTENSION JACKS
4. FORWARD RAMP EXTENSION
5. FORWARD RAMP
6. EXTENSION TOES
7. FORWARD RAMP GROUND SUPPORT PADS

FIGURE 95. Forward cargo on/off loading limitations.

Source: https://assist.dla.mil -- Downloaded: 2016-12-11T01:38Z
Check the source to verify that this is the current version before use.

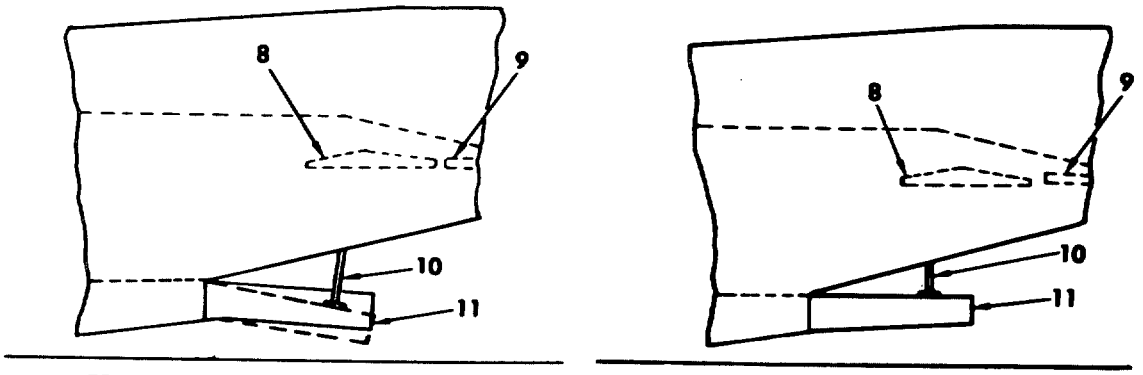

TRUCK LOADING POSITION

RAMP ACTUATOR SUPPORTED

TRUCK LOADING POSITION

RAMP ACTUATOR SUPPORTED

8. PRESSURE DOOR (OVERHEAD POSITION)
9. CENTER CARGO DOOR (OVERHEAD POSITION)
10. RAMP ACTUATOR
11. AFT RAMP

ON/OFF LOADING LIMITATIONS ACROSS AFT CARGO RAMP
TRUCK LOADING POSITION RAMP ACTUATOR SUPPORTED
A. ONE 50,000 POUND PLATFORM B. TWO 40,000 POUND PLATFORMS SIDE-BY-SIDE C. TWO 25,000 POUND AXLES IN TANDEM D. MAXIMUM TRACKED VEHICLE WEIGHT 85,000 POUNDS E. TRACKED VEHICLES EXCEEDING 62,000 POUNDS SHALL BE LOADED WITH CG AT BL 0 ± 7-INCHES F. ONE 36,000 POUND AXLE G. AXLES EXCEEDING 25,000 POUNDS SHALL BE LOADED WITH CG AT BL 0 ± 7-INCHES

FIGURE 96. Aft cargo ramp on/off loading limitations.

Source: https://assist.dla.mil -- Downloaded: 2016-12-11T01:38Z
Check the source to verify that this is the current version before use.

ON/OFF LOADING LIMITATIONS ACROSS AFT CARGO RAMP AND PRESSURE DOOR
DRIVE IN LOADING POSITION: RAMP ACTUATOR SUPPORTED
A. TWO 25,000 POUND AXLES IN TANDEM B. TWO 10,000 POUND PALLETS SIDE-BY-SIDE C. MAXIMUM TRACKED VEHICLE WEIGHT 85,000 POUNDS D. TRACKED VEHICLES EXCEEDING 62,000 POUNDS SHALL BE LOADED WITH CG AT BL0 ± 7-INCHES E. ONE 36,000 POUND AXLE F. AXLES EXCEEDING 25,000 POUNDS SHALL BE LOADED WITH CG AT BL 0 ± 7-INCHES

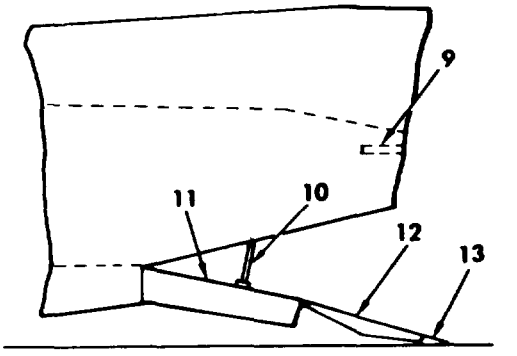

DRIVE IN LOADING POSITION

RAMP ACTUATOR SUPPORTED

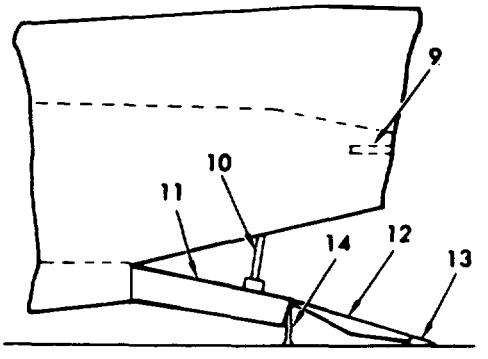

DRIVE IN LOADING POSITION

RAMP GROUND SUPPORTED

ON/OFF LOADING LIMITATIONS ACROSS AFT CARGO RAMP AND PRESSURE DOOR (IN RAMP EXTENSION POSITION)
DRIVE IN LOADING POSITION: RAMP GROUND SUPPORTED
A. TWO 25,000 POUND AXLES IN TANDEM B. TWO 10,000 POUND PALLETS SIDE BY SIDE C. MAXIMUM TRACKED VEHICLE WEIGHT 112,000 POUNDS D. NO LOADING OF AIRDROP PLATFORMS IN GROUND SUPPORTED CONFIGURATION E. ONE 36,000 POUND AXLE F. AXLE EXCEEDING 25,000 POUNDS SHALL BE LOADED WITH CG AT BL 0 ± 7 INCHES.

9. CENTER CARGO DOOR (OVERHEAD POSITION)
10. RAMP ACTUATOR
11. AFT RAMP
12. PRESSURE DOOR (RAMP EXTENSION POSITION)
13. PRESSURE DOOR TOES
14. AFT RAMP SUPPORT PADS

FIGURE 96. Aft cargo ramp on/off loading limitations. (continued)

Source: https://assist.dla.mil -- Downloaded: 2016-12-11T01:38Z
Check the source to verify that this is the current version before use.

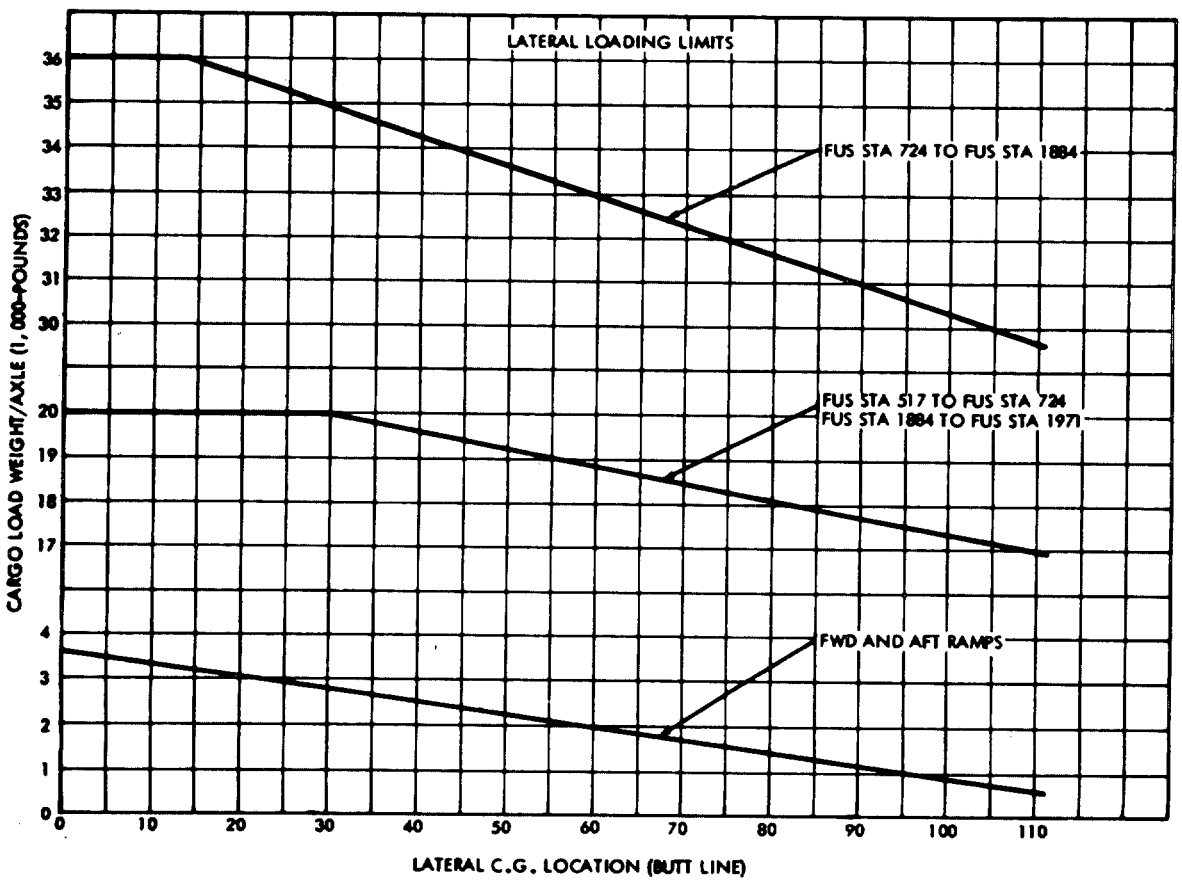

FIGURE 97. Lateral loading limitations.

Source: https://assist.dla.mil -- Downloaded: 2016-12-11T01:38Z
Check the source to verify that this is the current version before use.

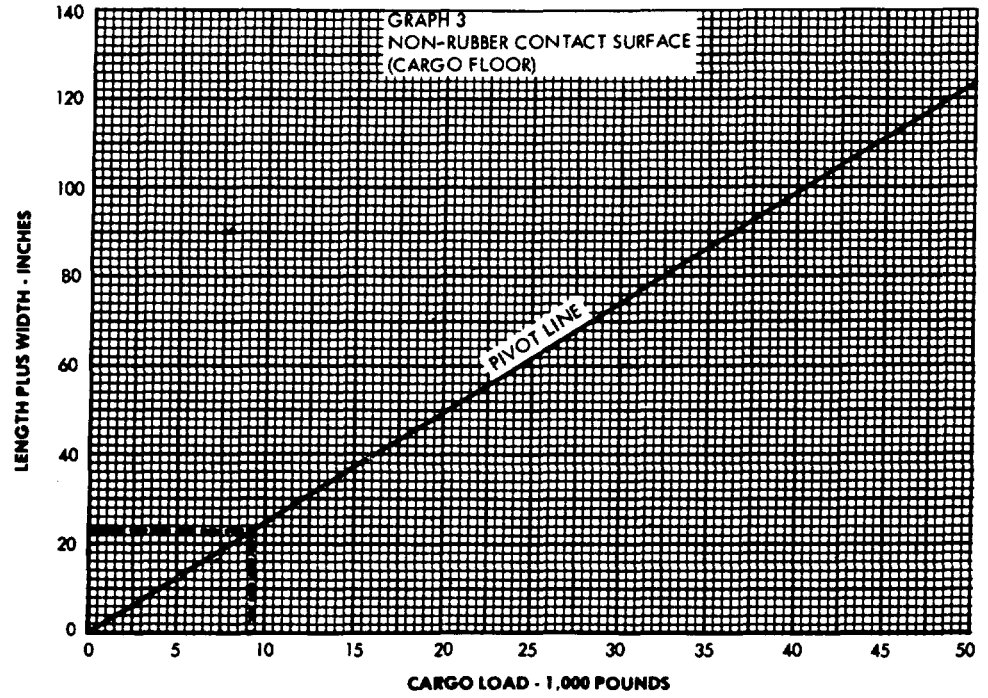

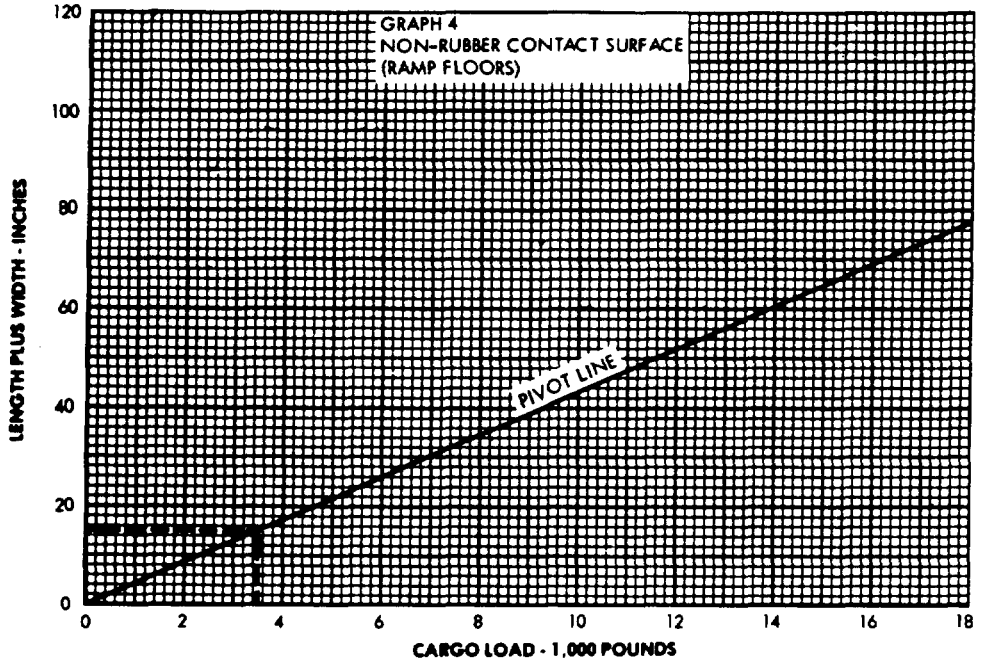

AIRPLANES MODIFIED BY T.O. 1C-5A-1831

FIGURE 98. Calculation of shoring required for concentrated cargo loads.

Source: https://assist.dla.mil -- Downloaded: 2016-12-11T01:38Z
Check the source to verify that this is the current version before use.

NOTE

1. ANY SOLID RUBBER WHEEL THAT CAN BE INFLIGHT CARRIED ON THE CARGO FLOOR WITHOUT SHORING, CAN BE ON OFF LOADED WITHOUT SHORING ACROSS ALL THE CARGO FLOOR.

2. RUBBER TIRES ARE DEFINED AS SOLID RUBBER TIRES AND RUBBER WHEELS.

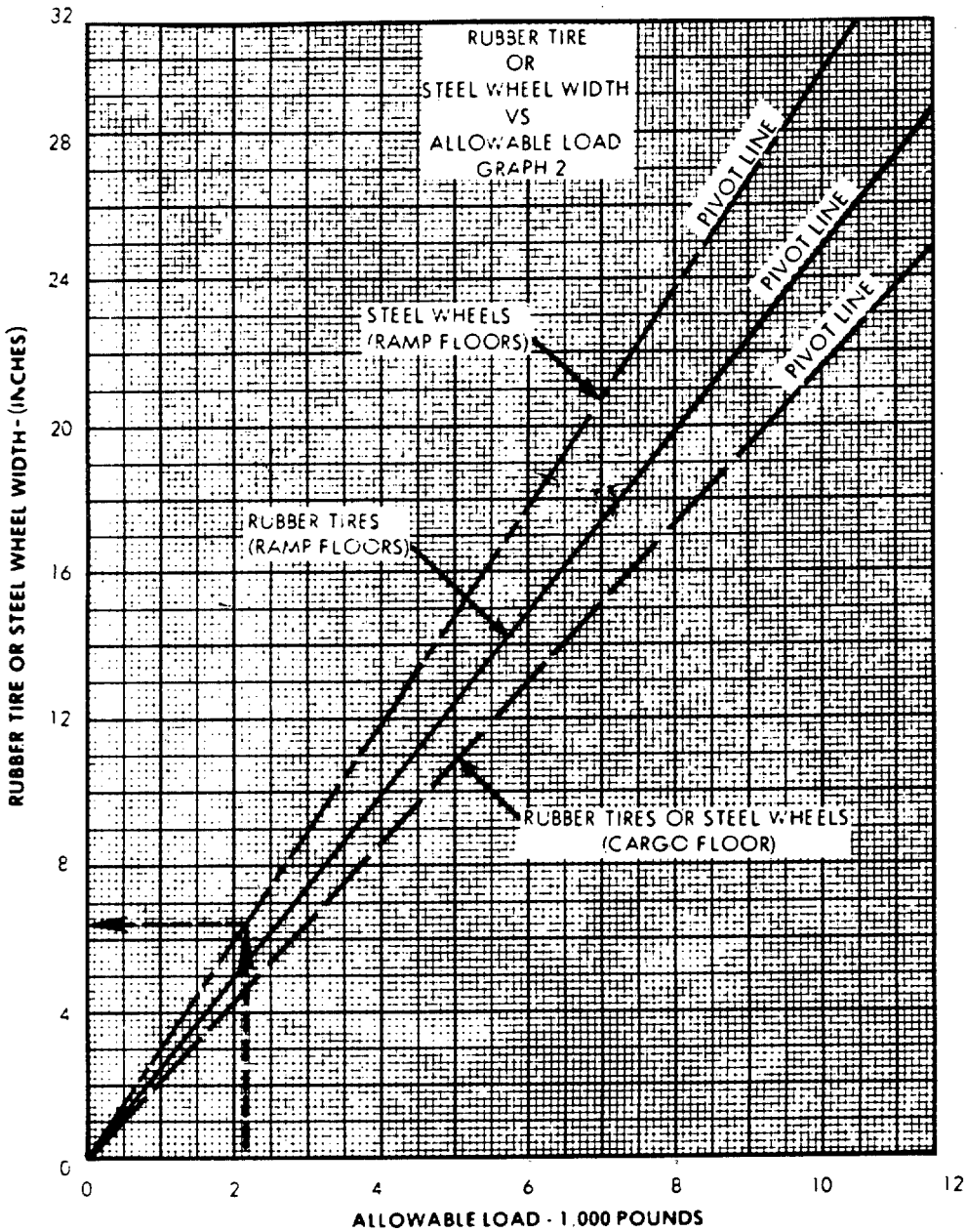

AIRPLANES MODIFIED BY T.O. 1C-5A-1831

FIGURE 99. Steel and hard rubber tire wheel allowable floor load limitations.

Source: https://assist.dla.mil -- Downloaded: 2016-12-11T01:38Z
Check the source to verify that this is the current version before use.

CAUTION

IF A CONCENTRATED CARGO LOAD IS TO BE PARTIALLY SUPPORTED BY FLOOR DISCONTINUITIES SUCH AS STOWED INBOARD LOGISTISTIC RAILS, ROLLER CONVEYORS, AND TIEDOWN RING PANS, THE PROCEDURE IN THIS FIGURE SHALL BE FOLLOWED TO DETERMINE IF SHORING WILL BE REQUIRED. VEHICLES WITH OVER-THE-ROAD PNEUMATIC TIRES WITH A WHEEL LOAD UP TO 5,000 POUNDS CAN BE LOADED ANYWHERE ON THE CARGO FLOOR, EXCEPT OVER THE TIEDOWN RING PANS, WITHOUT THE USE OF SHORING. FOR VEHICLES WITH PNEUMATIC TIRE LOAD THAT EXCEED 2,000 POUNDS PER WHEEL THAT ARE TO BE PARKED DIRECTLY OVER TIEDOWN RING PANS, THE PROCEDURES IN FIGURE 4D-18 SHALL BE FOLLOWED.

CODE

ROLLER CONVEYORS STOWED (ROLLERS FACING DOWN)

INBOARD RESTRAINT RAILS STOWED (RETRACTED)

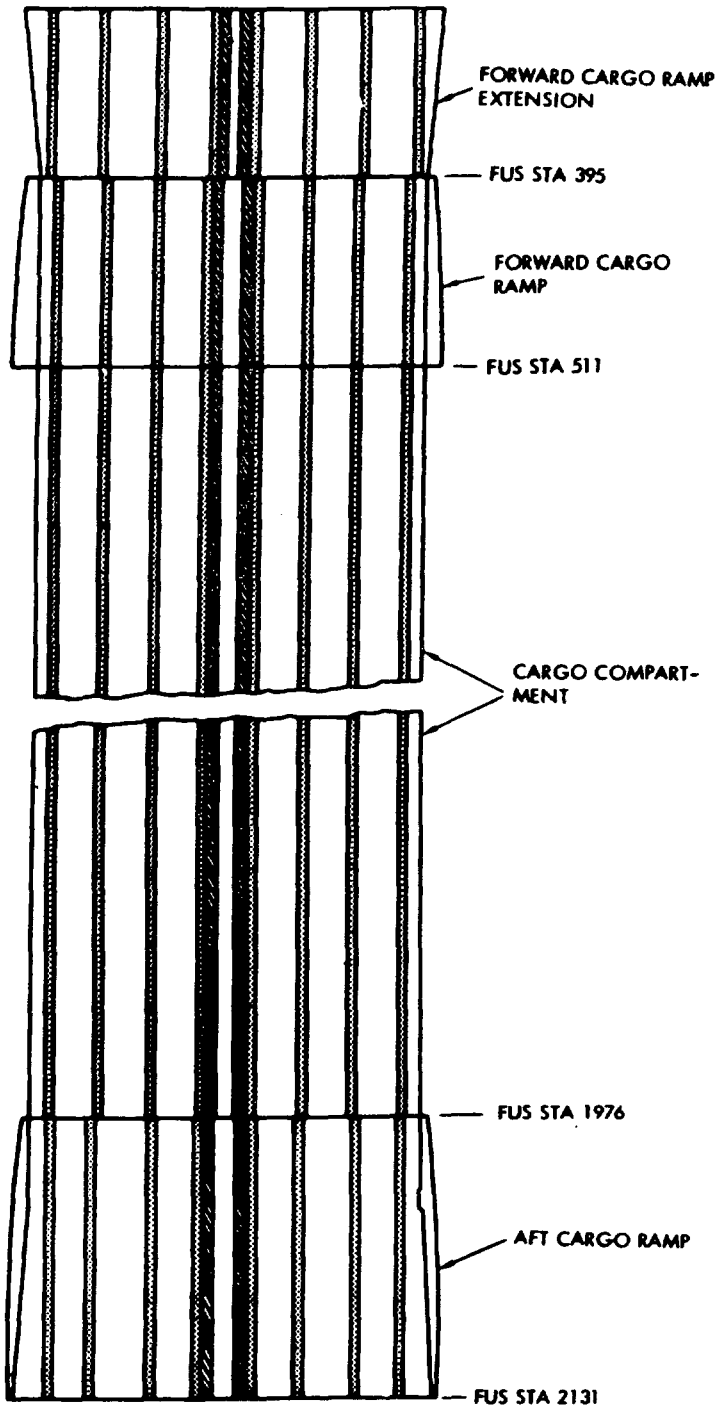

FIGURE 100. Restricted areas for concentrated cargo loads.

Source: https://assist.dla.mil -- Downloaded: 2016-12-11T01:38Z
Check the source to verify that this is the current version before use.

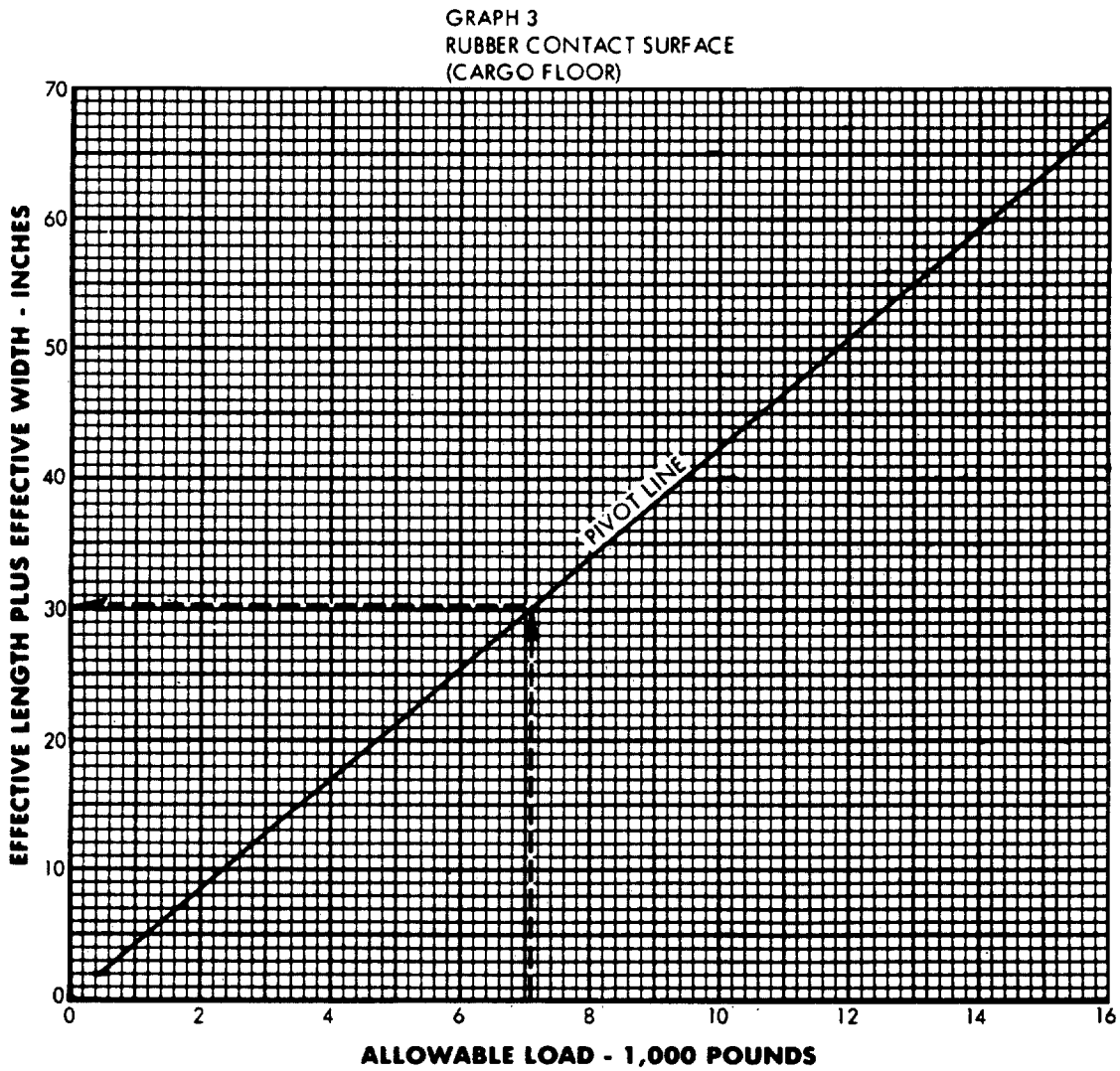

FIGURE 101. Pneumatic tire formula.

Source: https://assist.dla.mil -- Downloaded: 2016-12-11T01:38Z
Check the source to verify that this is the current version before use.

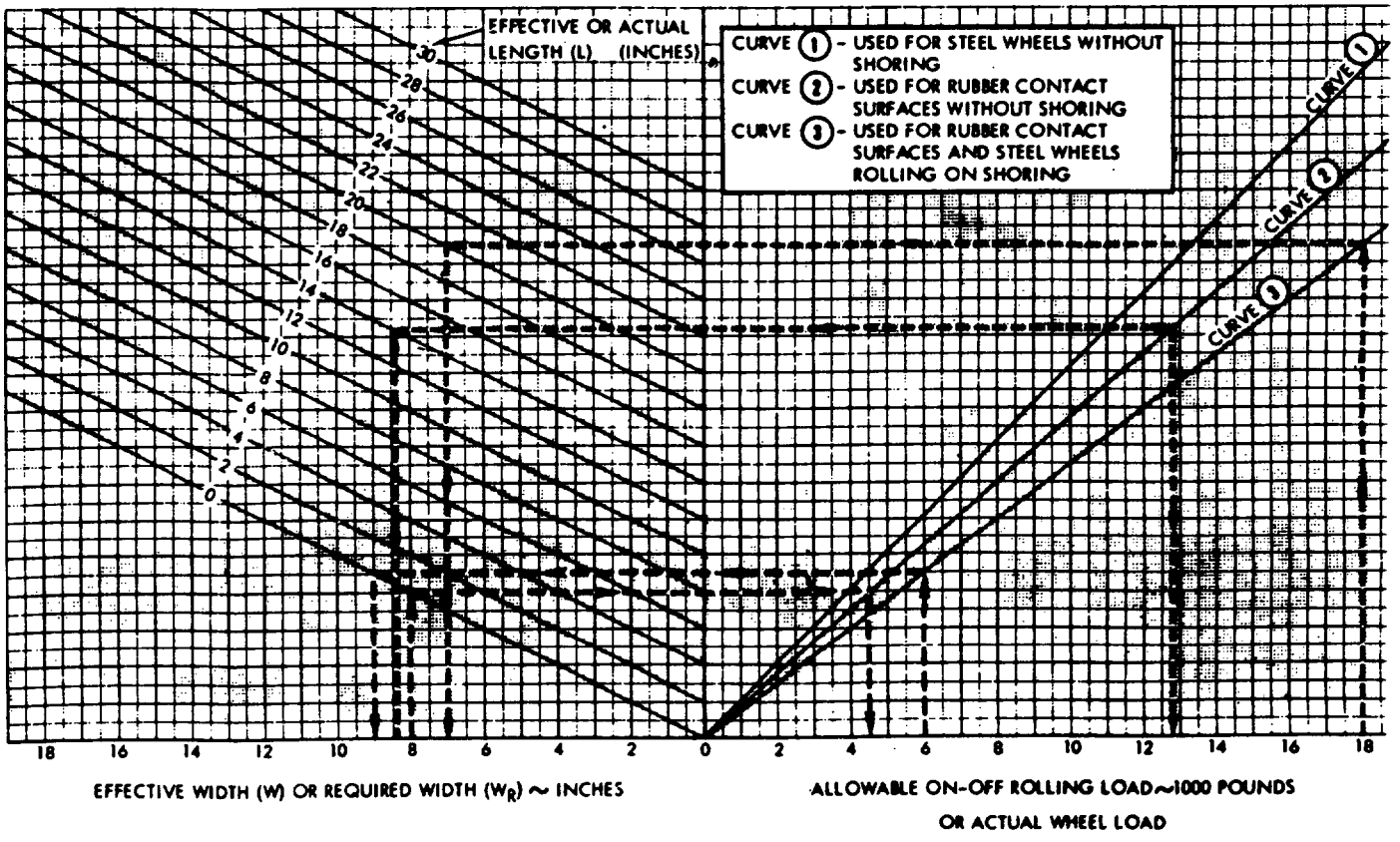

FIGURE 102. On/off loading and shoring requirements.

Source: https://assist.dla.mil -- Downloaded: 2016-12-11T01:38Z
Check the source to verify that this is the current version before use.

ATTENTION CUSTOMER

MIL-STD-1791, dated 31 October 1985 contains figure 51, 71, 84, 87, 88, 89, 90,93 and 103 that are foldouts and cannot be supplied as part of this digital file at this time. If you require it please fax this information sheet with your complete mailing address and we will mail them to you. Our fax number is (215) 697-1462.

Mailing Address: _____

_____

_____

Please circle the foldout figure you require below:

Figure 51, page 245

Figure 71, page 269

Figure 84, page 282

Figure 87, page 285

Figure 88, page 286

Figure 89, page 287

Figure 90, page 288

Figure 93, page 293

Figure 103, page 304

Source: https://assist.dla.mil -- Downloaded: 2016-12-11T01:38Z
Check the source to verify that this is the current version before use.

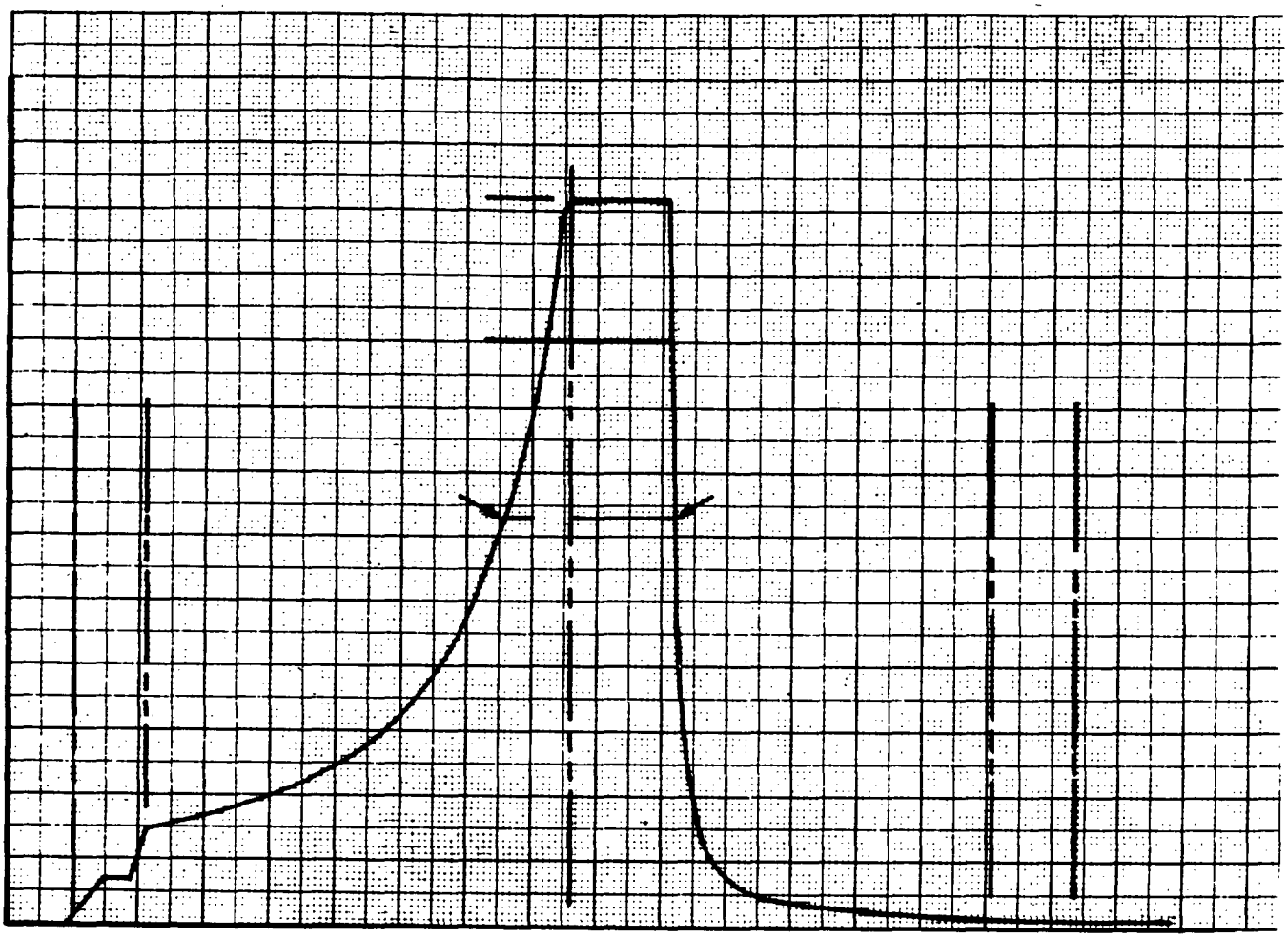

FIGURE 104. Typical cargo weight loading envelope.

Source: https://assist.dla.mil -- Downloaded: 2016-12-11T01:38Z
Check the source to verify that this is the current version before use.

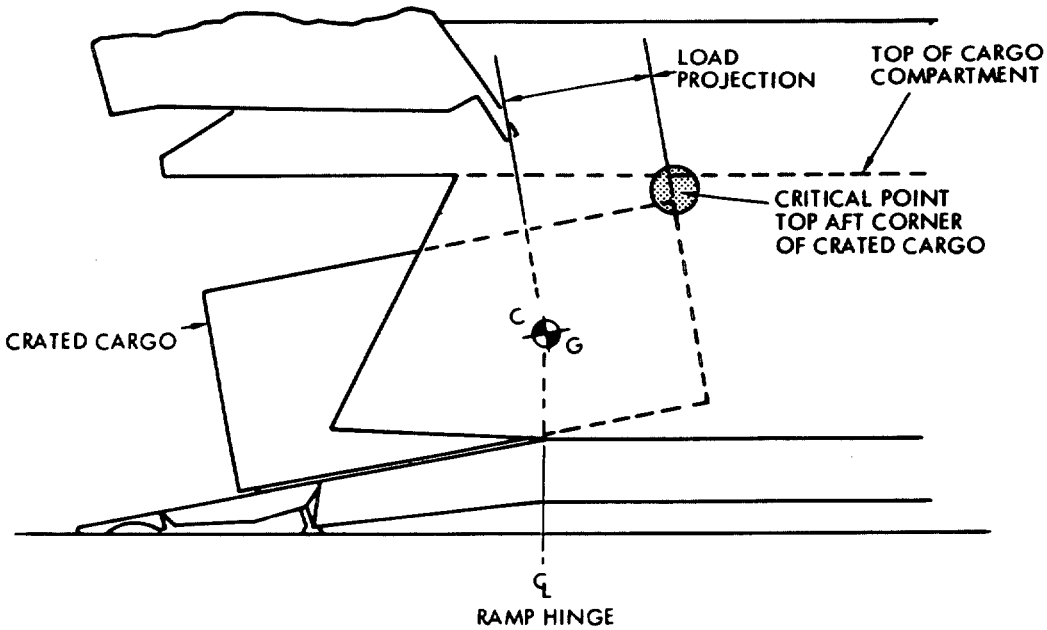

FORWARD END ON/OFF LOADING

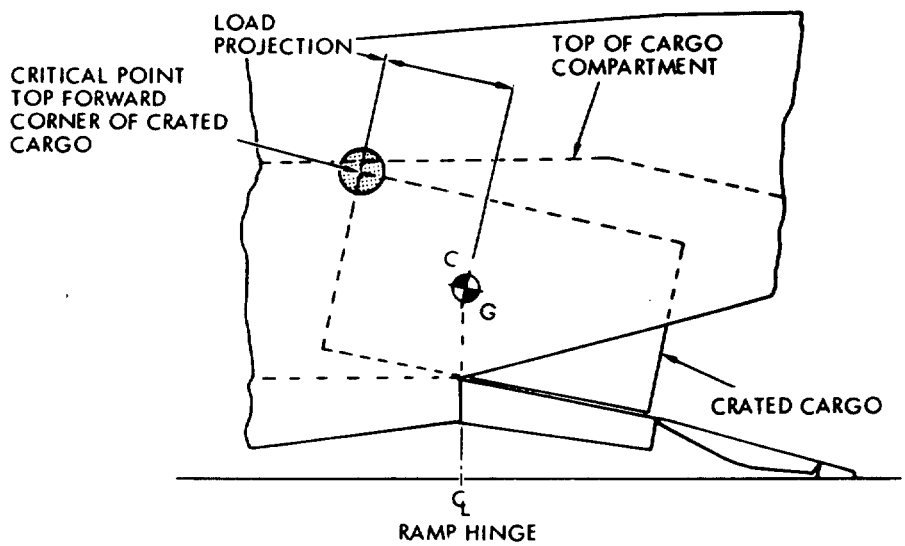

AFT END ON/OFF LOADING

FIGURE 105. Crated cargo projection limits (forward and aft end loading-palletized).

Source: https://assist.dla.mil -- Downloaded: 2016-12-11T01:38Z
Check the source to verify that this is the current version before use.

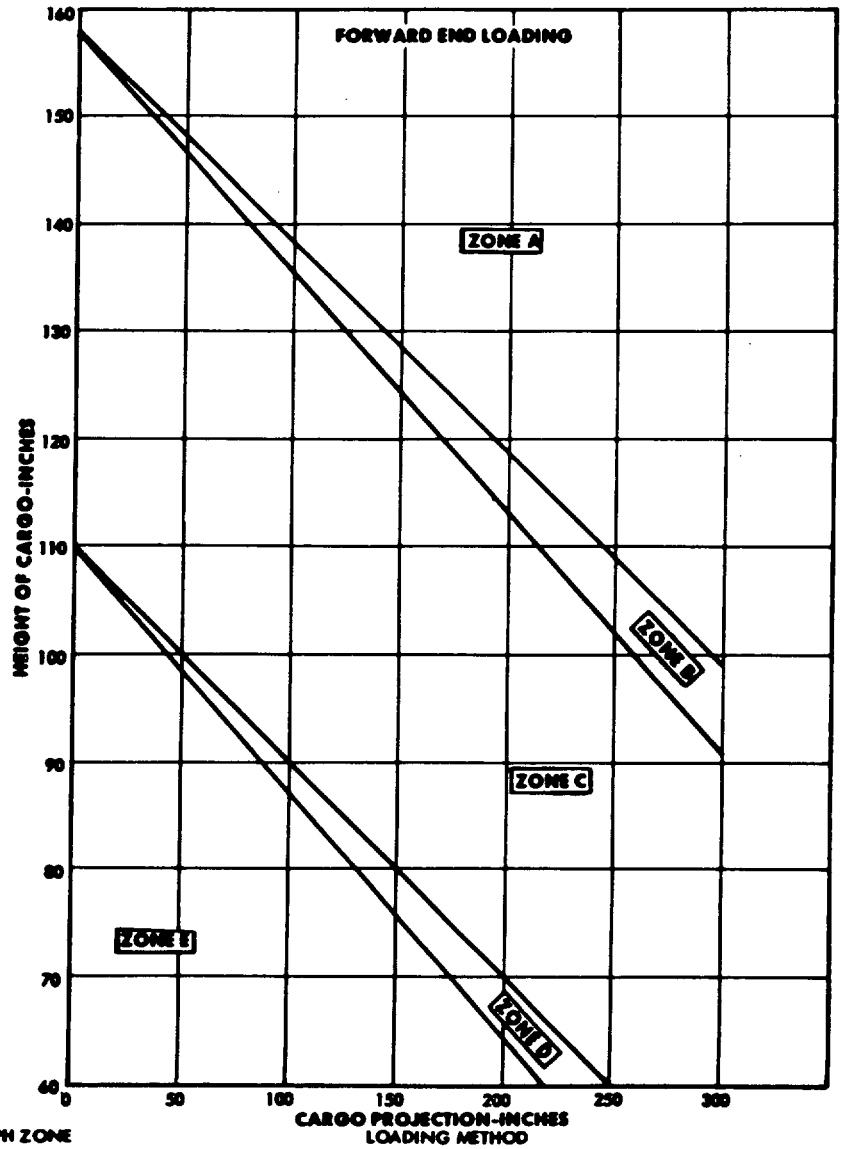

GRAPH ZONE	LOADING METHOD
ZONE A	LOAD WITH RAMP AND EXTENSION IN TRUCK LOADING POSITION OR, USING SPECIAL HANDLING PROCEDURES.
ZONE B	LOAD BETWEEN BL78 LEFT AND BL78 RIGHT WITH AIRPLANE FWD KNEELED.
ZONE C	LOAD BETWEEN BL78 LEFT AND BL78 RIGHT WITH AIRPLANE IN FWD OR LEVEL KNEELED POSITION.
ZONE D	LOAD AT ANY POINT ACROSS CARGO FLOOR BETWEEN BL114 LEFT AND BL114 RIGHT WITH AIRPLANE FWD KNEELED, OR BETWEEN BL 78 LEFT AND BL 78 RIGHT WITH AIRPLANE IN ANY KNEELED POSITION.
ZONE E	LOAD AT ANY POINT ACROSS CARGO FLOOR BETWEEN BL114 LEFT AND BL114 RIGHT WITH AIRPLANE IN FWD OR LEVEL KNEELED POSITION.

FIGURE 105. Crated cargo projection limits (forward and aft end loading-palletized). (continued)

Source: https://assist.dla.mil -- Downloaded: 2016-12-11T01:38Z
Check the source to verify that this is the current version before use.

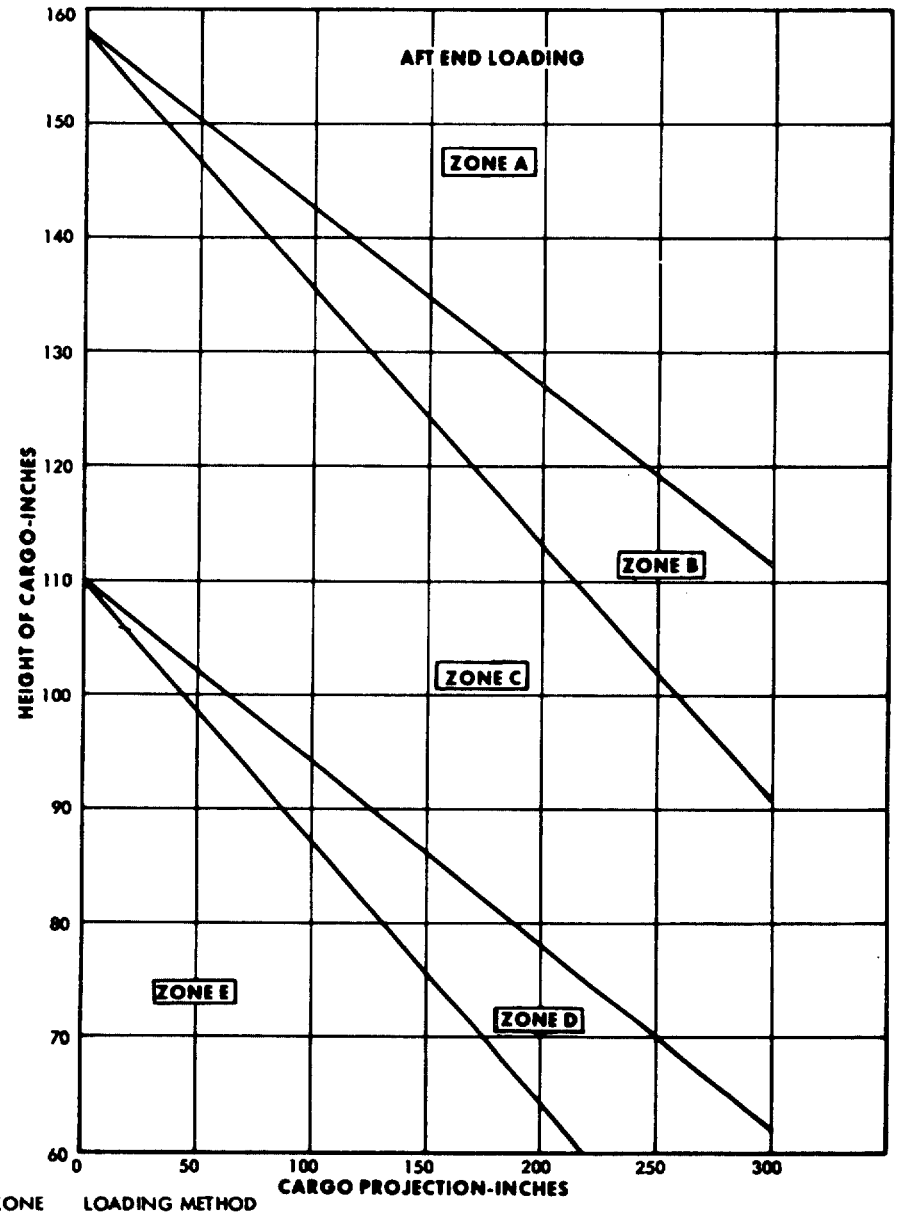

GRAPH ZONE	LOADING METHOD
ZONE A	LOADING WITH RAMP AND PRESSURE DOOR IN TRUCK LOADING POSITION, OR USING SPECIAL HANDLING PROCEDURES.
ZONE B	LOAD BETWEEN BL78 LEFT AND BL78 RIGHT WITH AIRPLANE AFT KNEELED.
ZONE C	LOAD BETWEEN BL78 LEFT AND BL78 RIGHT WITH AIRPLANE IN ANY KNEELED POSITION.
ZONE D	LOAD AT ANY POINT ACROSS CARGO FLOOR BETWEEN BL114 LEFT AND BL114 RIGHT WITH AIRPLANE AFT KNEELED, OR BETWEEN BL78 LEFT AND BL78 RIGHT WITH AIRPLANE IN ANY KNEELED POSITION.
ZONE E	LOAD AT ANY POINT ACROSS CARGO FLOOR BETWEEN BL114 LEFT AND BL114 RIGHT WITH AIRPLANE IN ANY KNEELED POSITION.

NOTE

PRESSURE DOOR LIMITATIONS WHEN PRESSURE DOOR IS IN OVERHEAD POSITION.

FIGURE 105. Crated cargo projection limits (forward and aft end loading-palletized). (continued)

Source: https://assist.dla.mil -- Downloaded: 2016-12-11T01:38Z
Check the source to verify that this is the current version before use.

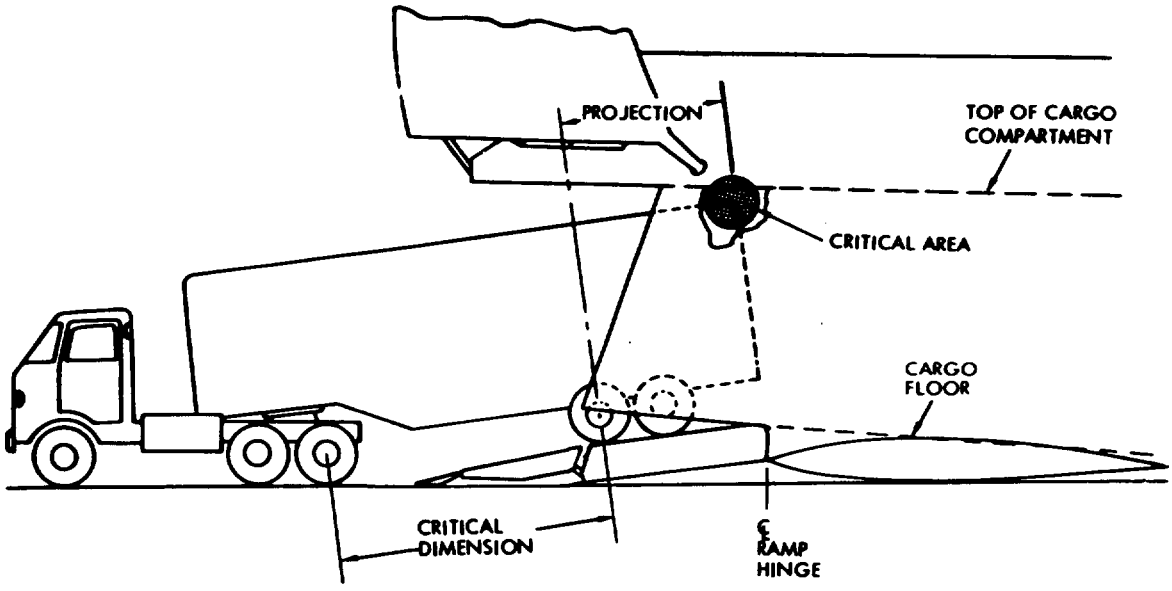

FORWARD LOADING

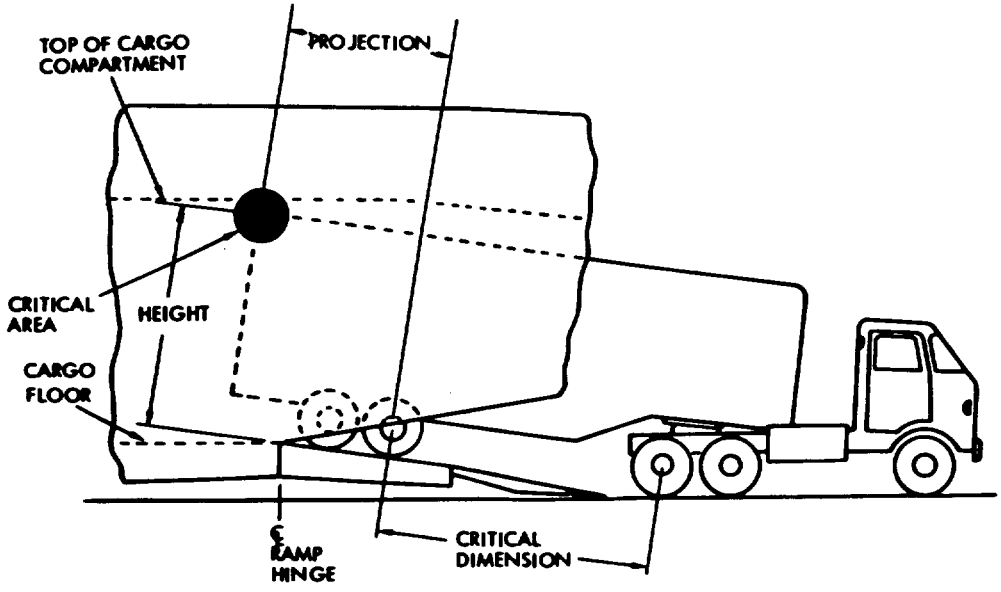

AFT LOADING

FIGURE 106. Vehicle projection limits (forward and aft loading).

Source: https://assist.dla.mil -- Downloaded: 2016-12-11T01:38Z
Check the source to verify that this is the current version before use.

CALCULATION PROCEDURES FOR ON/OFF LOADING OF VEHICLES

1. SEE SHEET 1 FOR VEHICLE DEMENSIONS AND CARGO FLOOR LOADING HEIGHTS THAT CAN AFFECT VEHICLE LOADING.

2. THE CALCULATION PROCEDURES ARE THE SAME REGARDLESS OF THE TYPE OF VEHICLE (SINGLE AXLE, BOGEY AXLE OR, TRACTOR TRAILER) THAT IS TO BE LOADED.

3. USE GRAPHS NO. 1 THROUGH 5 FOR FORWARD END LOADING CALCULATIONS.

4. USE GRAPHS NO. 6 THROUGH 12 FOR AFT END LOADING CALCULATIONS.

THE GRAPHS IN THIS FIGURE PROVIDE A QUICK MEANS OF DETERMINING IF A VEHICLE CAN BE SAFELY ON/OFF LOADED WITH THE FORWARD OR AFT END OF THE AIRPLANE CONFIGURED FOR DRIVE IN LOADING AND THE AIRPLANE, AS APPLICABLE, IN THE FORWARD, LEVEL OR, AFT KNEELED POSITION.

CALCULATION PROCEDURES USING GRAPHS NO. 1 AND NO. 6

TO USE GRAPHS NO. 1 AND NO. 6 TO DETERMINE IF A VEHICLE WITH A CRITICAL DIMENSION OF LESS THAN 275-INCHES (FOR FORWARD LOADING) OR, LESS THAN 320-INCHES (FOR AFT END LOADING), PROCEED AS FOLLOWS:

1. LOCATE KNOWN VEHICLE HEIGHT ON LEFT SCALE (VEHICLE HEIGHT-INCHES) OF GRAPH.

2. LOCATE VEHICLE KNOWN PROJECTION ON BOTTOM SCALE (VEHICLE PROJECTION-INCHES) OF GRAPH.

3. SIMULTANEOUSLY MOVE RIGHT ACROSS GRAPH FROM LEFT SCALE (VEHICLE HEIGHT/INCHES) AND UP ON GRAPH FROM BOTTOM SCALE (VEHICLE PROJECTION-INCHES) TO THE INTERSECTION POINT FOR BOTH THESE VALUES.

4. LOAD VEHICLE AS INDICATED BY THE POSITION OF THE INTERSECTION POINTS ON GRAPHS AND THE RELATED LOADING INSTRUCTION NOTES ON GRAPH.

CALCULATION PROCEDURES USING GRAPHS NO. 2 THROUGH 5 AND GRAPHS NO. 7 THROUGH 12.

TO USE GRAPHS NO. 2 THROUGH 5 AND GRAPHS NO. 7 THROUGH 12 TO DETERMINE IF A VEHICLE WITH A CRITICAL DIMENSION GREATER THAN 275-INCHES (FOR FORWARD LOADING) OR, GREATER THAN 320-INCHES (FOR AFT LOADING) CAN BE SAFELY ON/OFF LOADED, PROCEED AS FOLLOWS:

1. LOCATE VEHICLE KNOWN PROJECTION ON LEFT SCALE (VEHICLE PROJECTION-INCHES) OF GRAPH.

2. LOCATE VEHICLE KNOWN CRITICAL DIMENSION ON BOTTOM SCALE (VEHICLE CRITICAL DIMENSION-INCHES) OF GRAPH.

3. SIMULTANEOUSLY MOVE RIGHT ACROSS GRAPH FROM LEFT SCALE (VEHICLE PROJECTION-INCHES) AND UP ON GRAPH FROM BOTTOM SCALE (VEHICLE CRITICAL DIMENSION-INCHES) TO THE INTERSECTION POINT FOR BOTH THESE VALUES.

4. IF THE VEHICLE KNOWN HEIGHT IS THE SAME AS, OR LESS THAN THE CURVE (VEHICLE HEIGHT-INCHES) ON, OR ABOVE THE INTERSECTION POINT (OBTAINED IN STEP 3), THE VEHICLE CAN BE SAFELY ON/OFF LOADED WITH THE AIRPLANE IN THE CONFIGURATION REPRESENTED BY THE PARTICULAR GRAPH(S).

5. IF THE VEHICLE HEIGHT IS GREATER THAN THE CURVE (VEHICLE HEIGHT-INCHES) ON, OR ABOVE THE INTERSECTION POINT (OBTAINED IN STEP 3), THE VEHICLE MUST BE ON/OFF LOADED WITH THE CARGO RAMP IN THE TRUCK LOADING POSITION.

FIGURE 106. Vehicle projection limits (forward and aft loading). (continued)

Source: https://assist.dla.mil -- Downloaded: 2016-12-11T01:38Z
Check the source to verify that this is the current version before use.

VEHICLE PROJECTION LIMITS - CRITICAL DIMENSION LESS THAN 275 INCHES

NOTE

IF THE VEHICLE KNOWN HEIGHT IS GREATER THAN 112 INCHES AND THE CRITICAL DIMENSION IS GREATER THAN 275 INCHES, SEE GRAPHS 2 AND 4.

GRAPH ZONE

A LOAD WITH RAMP AND EXTENSION IN TRUCK LOADING POSITION OR, USE SPECIAL HANDLING PROCEDURES.

B LOAD BETWEEN BL 78 LEFT AND BL 78 RIGHT WITH AIRPLANE FORWARD KNEELED.

C LOAD BETWEEN BL 78 LEFT AND BL 78 RIGHT WITH AIRPLANE FORWARD OR LEVEL KNEELED.

D LOAD AT ANY POINT ACROSS CARGO FLOOR BETWEEN BL 114 LEFT AND BL 114 RIGHT WITH AIRPLANE FORWARD KNEELED, OR BETWEEN BL 78 LEFT AND BL 78 RIGHT WITH AIRPLANE IN ANY KNEELED POSITION.

E LOAD AT ANY POINT ACROSS CARGO FLOOR BETWEEN BL 114 LEFT AND BL 114 RIGHT WITH AIRPLANE FORWARD OR LEVEL KNEELED.

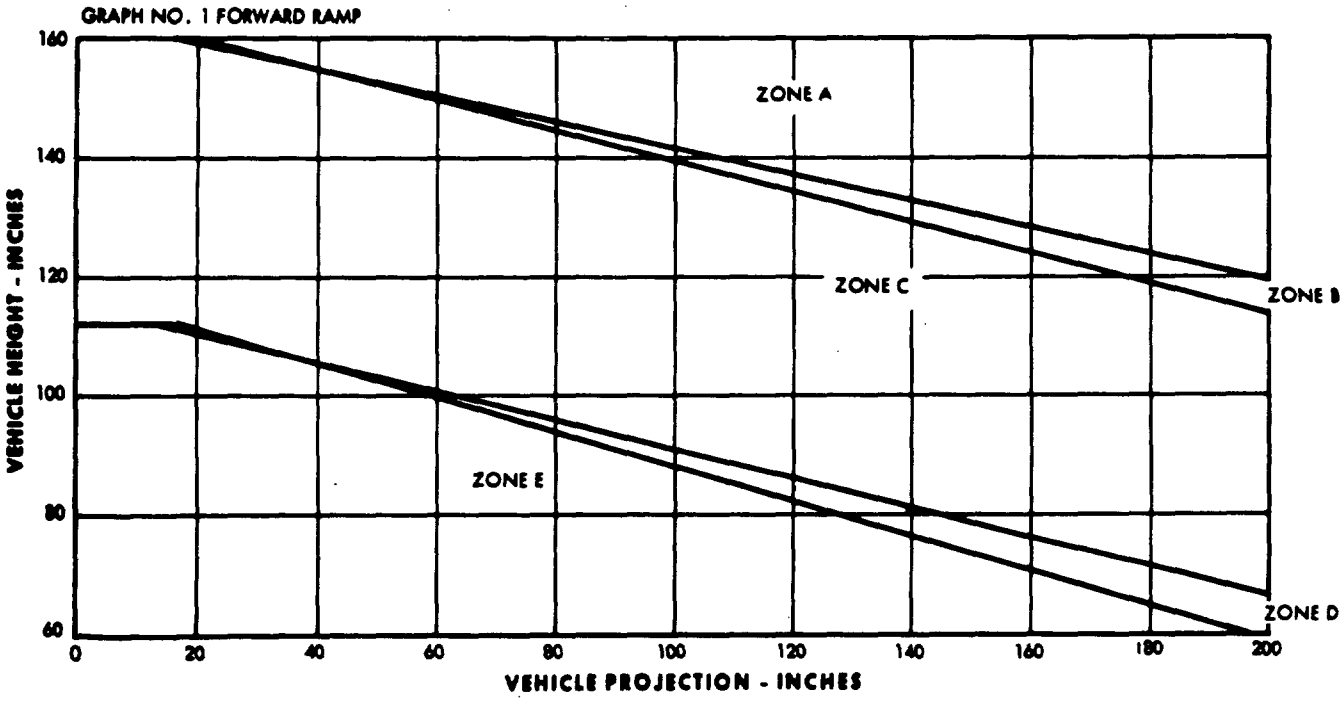

FIGURE 106. Vehicle projection limits (forward and aft loading). (continued)

Source: https://assist.dla.mil -- Downloaded: 2016-12-11T01:38Z
Check the source to verify that this is the current version before use.

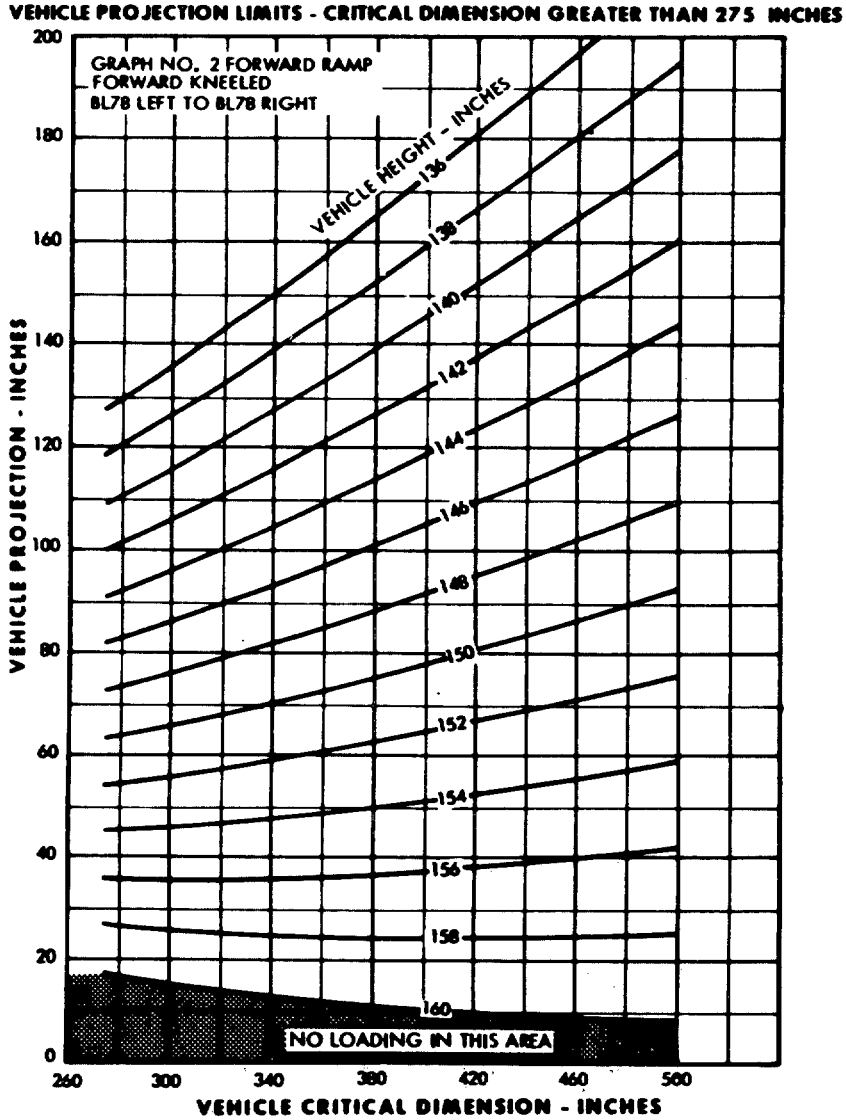

NOTE

1. IF THE VEHICLE KNOWN HEIGHT IS GREATER THAN THE HEIGHT REPRESENTED BY THE CURVE (VEHICLE HEIGHT-INCHES) ON OR ABOVE THE INTERSECTION POINT (OF VEHICLE PROJECTION AND CRITICAL DIMENSION), THE VEHICLE CANNOT BE SAFELY ON/OFF LOADED WITH THE AIRPLANE IN THE CONFIGURATION REPRESENTED BY THIS GRAPH, AND MUST BE ON/OFF LOADED USING SPECIAL HANDLING PROCEDURES.

2. IF THE VEHICLE KNOWN HEIGHT IS THE SAME AS OR, LESS THAN THE HEIGHT REPRESENTED BY THE CURVE (VEHICLE HEIGHT-INCHES) ON OR ABOVE THE INTERSECTION POINT (OF VEHICLE PROJECTION AND CRITICAL DIMENSION), THE VEHICLE CAN BE SAFELY ON/OFF LOADED WITH THE AIRPLANE IN THE CONFIGURATION REPRESENTED BY THIS GRAPH OR, IN THE CONFIGURATION REPRESENTED BY GRAPH NO. 3 OR, GRAPH NO. 4.

3. IF THE VEHICLE HEIGHT IS 160 INCHES OR GREATER, THE VEHICLE MUST BE ON/OFF LOADED USING SPECIAL HANDLING PROCEDURES.

FIGURE 106. Vehicle projection limits (forward and aft loading). (continued)

Source: https://assist.dla.mil -- Downloaded: 2016-12-11T01:38Z
Check the source to verify that this is the current version before use.

VEHICLE PROJECTION LIMITS — CRITICAL DIMENSION GREATER THAN 275 INCHES

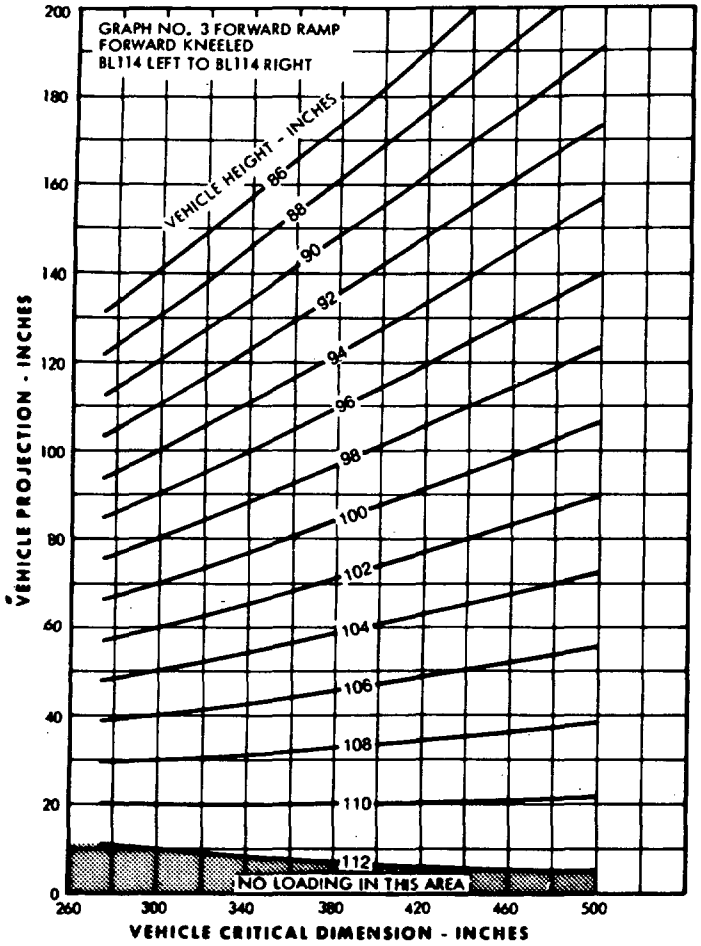

NOTE

1. If the vehicle known height is greater than the height represented by the curve (vehicle height-inches) on or above the intersection point (of vehicle projection and critical dimension), the vehicle cannot be safely on/off loaded with the airplane in the configuration represented by this graph, and must be on on/off loaded with the airplane in the configuration represented by graph No. 2 or, graph No. 4 or by using special handling procedures.

2. If the vehicle known height is the same as or, less than the height represented by the curve (vehicle height-inches) on or above the intersection point (of vehicle projection and critical dimension), the vehicle can be safely on/off loaded with the airplane in the configuration represented by this graph or, in the configuration represented by graph No. 2 or, graph No. 4.

3. If the vehicle eight is 112 inches or greater, the vehicle must be on/off loaded using special handling procedures.

FIGURE 106. Vehicle projection limits (forward and aft loading). (continued)

Source: https://assist.dla.mil -- Downloaded: 2016-12-11T01:38Z
Check the source to verify that this is the current version before use.

VEHICLE PROJECTION LIMITS - CRITICAL DIMENSION GREATER THAN 275 INCHES

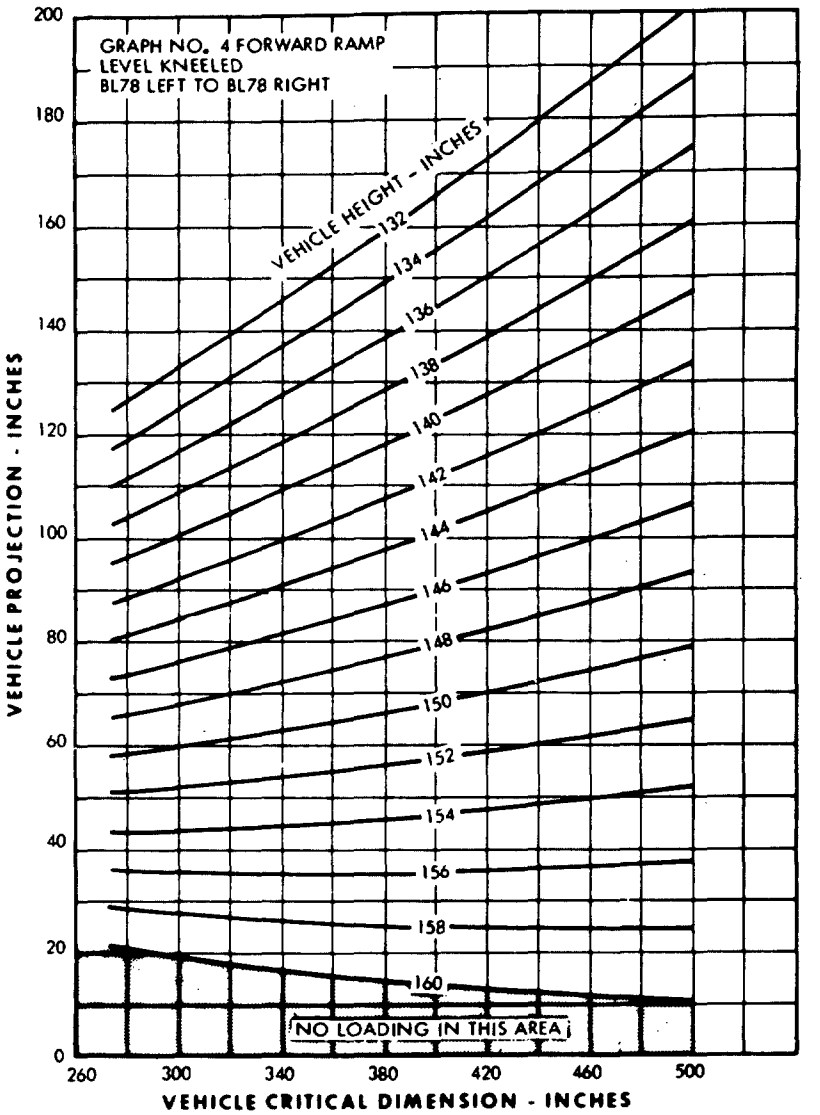

NOTE

1. IF THE VEHICLE KNOWN HEIGHT IS GREATER THAN THE HEIGHT REPRESENTED BY THE CURVE (VEHICLE HEIGHT-INCHES) ON OR ABOVE THE INTERSECTION POINT (OF VEHICLE PROJECTION AND CRITICAL DIMENSION), THE VEHICLE CANNOT BE SAFELY ON/OFF LOADED WITH THE AIRPLANE IN THE CONFIGURATION REPRESENTED BY THIS GRAPH, AND MUST BE ON/OFF LOADED WITH THE AIRPLANE IN THE CONFIGURATION REPRESENTED BY GRAPH NO. 2 OR, USING SPECIAL HANDLING PROCEDURES.

2. IF THE VEHICLE KNOWN HEIGHT IS THE SAME AS OR, LESS THAN THE HEIGHT REPRESENTED BY THE CURVE (VEHICLE HEIGHT-INCHES) ON OR ABOVE THE INTERSECTION POINT (OF VEHICLE PROJECTION AND CRITICAL DIMENSION), THE VEHICLE CAN BE SAFELY ON/OFF LOADED WITH THE AIRPLANE IN THE CONFIGURATION REPRESENTED BY THIS GRAPH OR, IN THE CONFIGURATION REPRESENTED BY GRAPH NO. 2.

3. IF THE VEHICLE HEIGHT IS 160 INCHES OR GREATER, THE VEHICLE MUST BE ON/OFF LOADED USING SPECIAL HANDLING PROCEDURES.

FIGURE 106. Vehicle projection limits (forward and aft loading). (continued)

Source: https://assist.dla.mil -- Downloaded: 2016-12-11T01:38Z
Check the source to verify that this is the current version before use.

VEHICLE PROJECTION LIMITS - CRITICAL DIMENSION GREATER THAN 275 INCHES

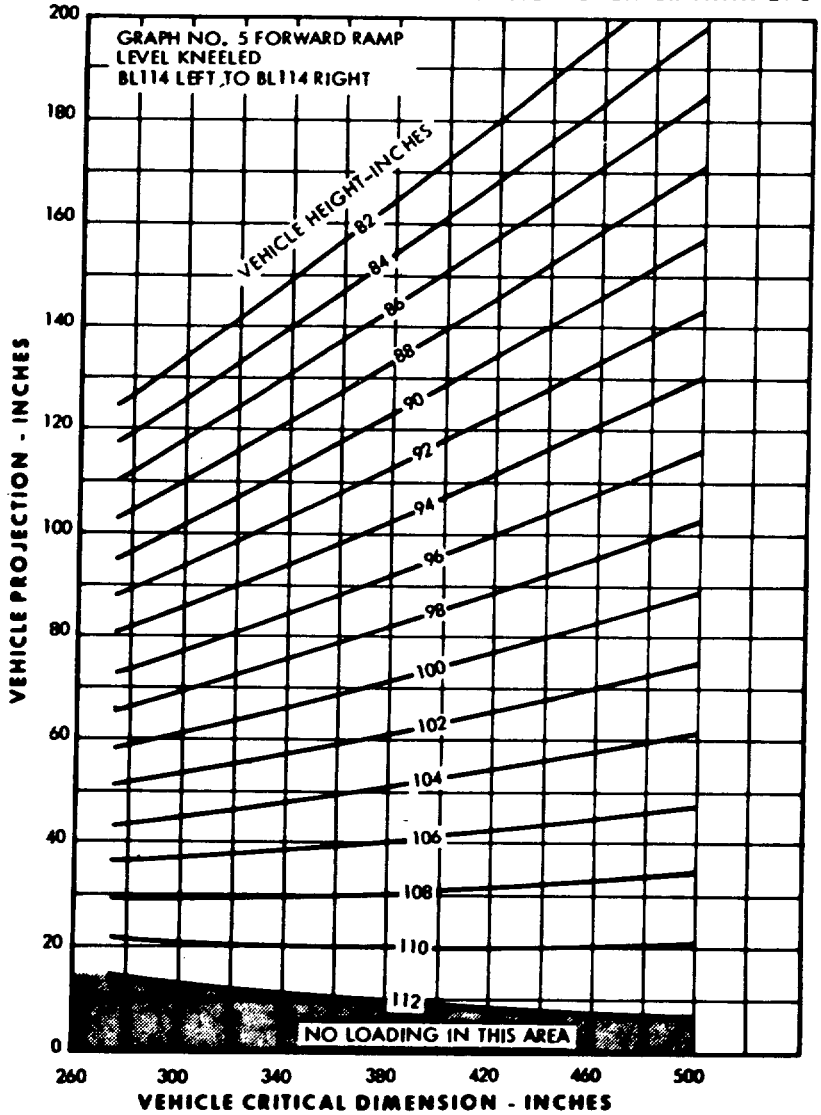

NOTE

1. IF THE VEHICLE KNOWN HEIGHT IS GREATER THAN THE HEIGHT REPRESENTED BY THE CURVE (VEHICLE HEIGHT-INCHES) ON OR ABOVE THE INTERSECTION POINT (OF VEHICLE PROJECTION AND CRITICAL DIMENSION), THE VEHICLE CANNOT BE SAFELY ON/OFF LOADED WITH THE AIRPLANE IN THE CONFIGURATION REPRESENTED BY THIS GRAPH, AND MUST BE ON/OFF LOADED WITH THE AIRPLANE IN THE CONFIGURATION REPRESENTED BY GRAPH NO. 2 OR, GRAPH NO. 4 OR, USING SPECIAL HANDLING PROCEDURES.

2. IF THE VEHICLE KNOWN HEIGHT IS THE SAME AS OR, LESS THAN THE HEIGHT REPRESENTED BY THE CURVE (VEHICLE HEIGHT-INCHES) ON OR ABOVE THE INTERSECTION POINT (OF VEHICLE PROJECTION AND CRITICAL DIMENSION), THE VEHICLE CAN BE SAFELY ON/OFF LOADED WITH THE AIRPLANE IN THE CONFIGURATION REPRESENTED BY THIS GRAPH OR, IN THE CONFIGURATION REPRESENTED BY GRAPH NO. 2 OR, GRAPH NO. 4.

3. IF THE VEHICLE HEIGHT IS 160 INCHES OR GREATER, THE VEHICLE MUST BE ON/OFF LOADED USING SPECIAL HANDLING PROCEDURES.

FIGURE 106. Vehicle projection limits (forward and aft loading). (continued)

Source: https://assist.dla.mil -- Downloaded: 2016-12-11T01:38Z
Check the source to verify that this is the current version before use.

VEHICLE PROJECTION LIMITS - CRITICAL DIMENSION LESS THAN 320 INCHES

GRAPH ZONE

A. LOAD USING SPECIAL HANDLING PROCEDURES.

B. LOAD BETWEEN BL 78 LEFT AND BL 78 RIGHT WITH AIRPLANE AFT KNEELED.

C. LOAD BETWEEN BL 78 LEFT AND BL 78 RIGHT WITH AIRPLANE FORWARD OR LEVEL KNEELED.

D LOAD BETWEEN BL 78 LEFT AND BL 78 RIGHT WITH AIRPLACE IN ANY KNEELED POSITION.

E LOAD AT ANY POINT ACROSS CARGO FLOOR BETWEEN BL 114 LEFT AND BL 114 RIGHT WITH AIRPLANE AFT KNEELED, OR BETWEEN BL 78 LEFT AND BL 78 RIGHT WITH AIRPLANE IN ANY KNEELED POSITION.

F LOAD ANY POINT ACROSS CARGO FLOOR BETWEEN BL 114 LEFT AND BL 114 RIGHT WITH AIRPLANE IN ANY KNEELED POSITION.

NOTE
IF THE VEHICLE KNOWN HEIGHT IS GREATER THAN 112 INCHES AND THE CRITICAL DIMENSION IS GREATER THAN 320 INCHES, SEE GRAPHS 8, 9, AND 10.

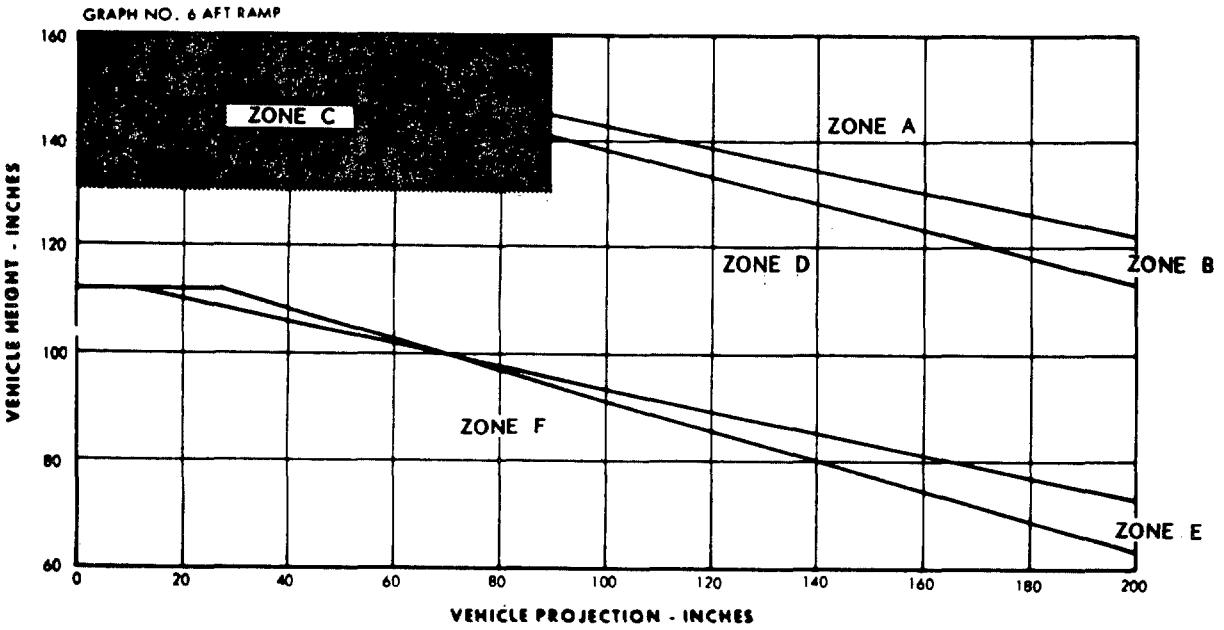

FIGURE 106. Vehicle projection limits (forward and aft loading). (continued)

Source: https://assist.dla.mil -- Downloaded: 2016-12-11T01:38Z
Check the source to verify that this is the current version before use.

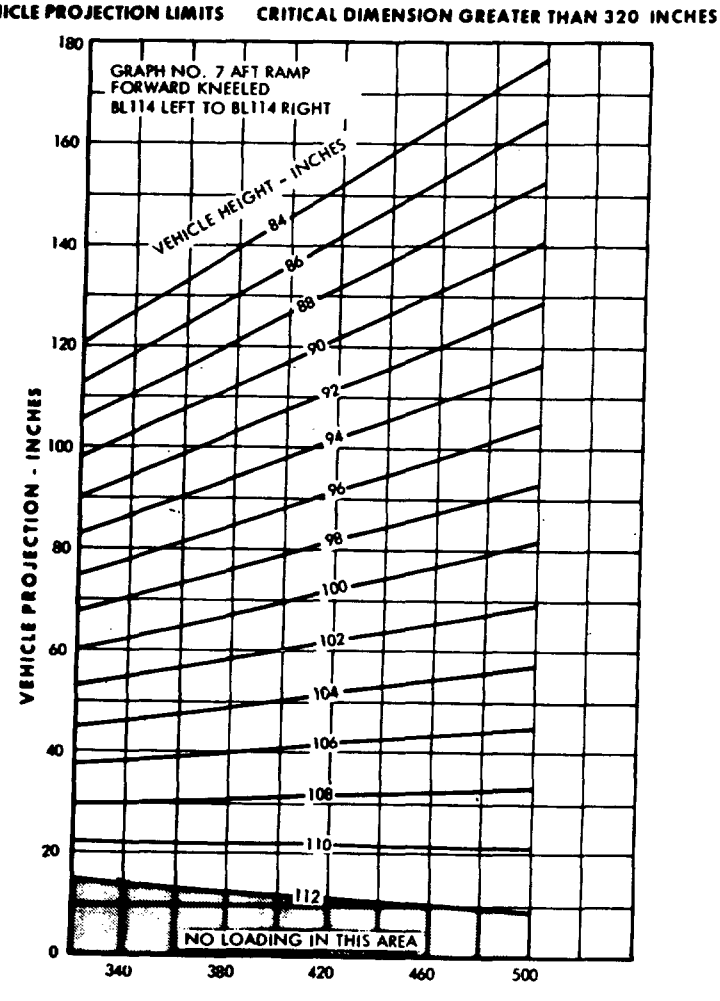

NOTE

1. If the vehicle known height is greater than the height represented by the curve (vehicle height-inches) on or above the intersection point (of vehicle projection and critical dimension), the vehicle cannot be safely on/off loaded with the airplane in the configuration represented by this graph, and may be on/off loaded with the airplane in the configuration represented by either graph No. 8, 9, 10, 11, or 12, or using special handling procedures.

2. If the vehicle known height is the same as or, less than the height represented by the curve (vehicle height-inches) on or above the intersection point (of vehicle projection and critical dimension), the vehicle can be safely on/off loaded with the airplane in the configuration represented by this graph or, in the configuration represented by either graph No. 8, 9, 10, 11, or 12.

3. If the vehicle height is 112 inches or greater, the vehicle must be on/off loaded using special handling procedures.

FIGURE 106. Vehicle projection limits (forward and aft loading). (continued)

Source: https://assist.dla.mil -- Downloaded: 2016-12-11T01:38Z
Check the source to verify that this is the current version before use.

VEHICLE PROJECTION LIMITS - CRITICAL DIMENSION GREATER THAN 320 INCHES

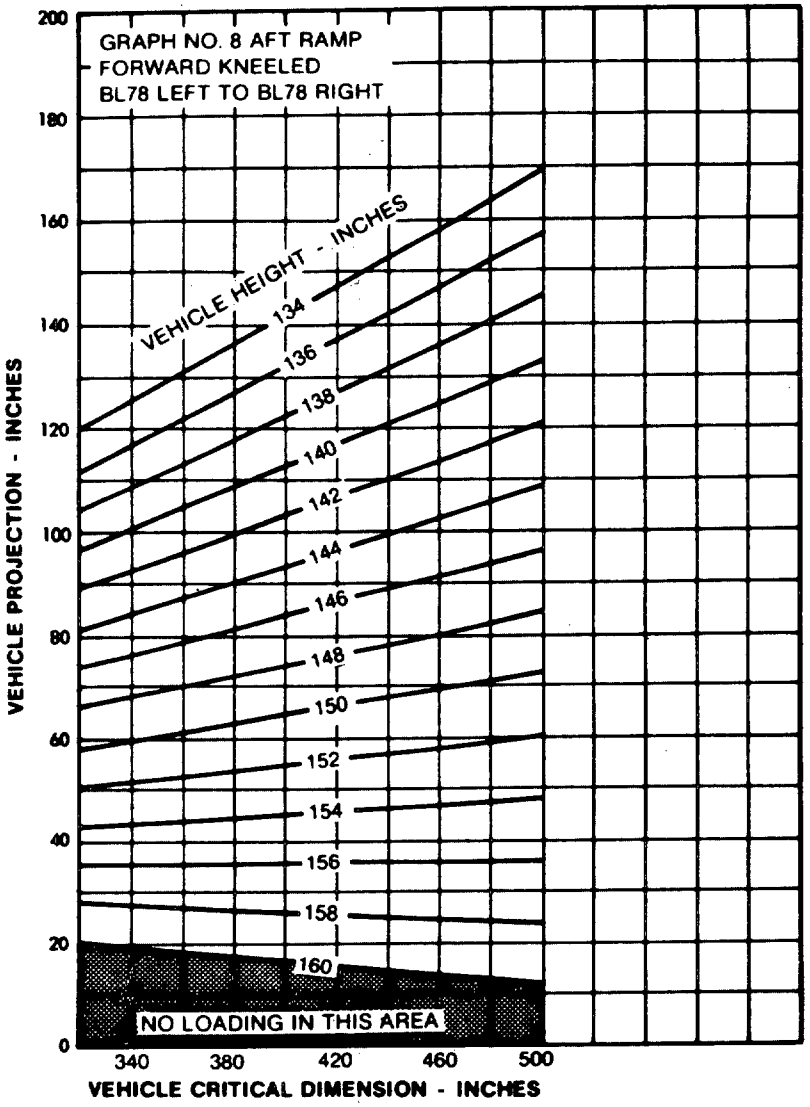

NOTE

1. IF THE VEHICLE KNOWN HEIGHT IS GREATER THAN THE HEIGHT REPRESENTED BY THE CURVE (VEHICLE HEIGHT-INCHES) ON OR ABOVE THE INTERSECTION POINT (OF VEHICLE PROJECTION AND CRITICAL DIMENSION), THE VEHICLE CANNOT BE SAFELY ON/OFF LOADED WITH THE AIRPLANE IN THE CONFIGURATION REPRESENTED BY THIS GRAPH, AND MAY BE ON/OFF LOADED WITH THE AIRPLANE IN THE CONFIGURATION REPRESENTED BY GRAPH NO. 9 OR, GRAPH NO. 12 OR, USING SPECIAL HANDLING PROCEDURES.

2. IF THE VEHICLE KNOWN HEIGHT IS THE SAME AS OR, LESS THAN THE HEIGHT REPRESENTED BY THE CURVE (VEHICLE HEIGHT-INCHES) ON OR ABOVE THE INTERSECTION POINT (OF VEHICLE PROJECTION AND CRITICAL DIMENSION), THE VEHICLE CAN BE SAFELY ON/OFF LOADED WITH THE AIRPLANE IN THE CONFIGURATION REPRESENTED BY THIS GRAPH OR, IN THE CONFIGURATION REPRESENTED BY GRAPH NO. 9 OR, GRAPH NO. 12.

3. IF THE VEHICLE HEIGHT IS 160 INCHES OR GREATER, THE VEHICLE MUST BE ON/OFF LOADED USING SPECIAL HANDLING PROCEDURES.

FIGURE 106. Vehicle projection limits (forward and aft loading). (continued)

Source: https://assist.dla.mil -- Downloaded: 2016-12-11T01:38Z
Check the source to verify that this is the current version before use.

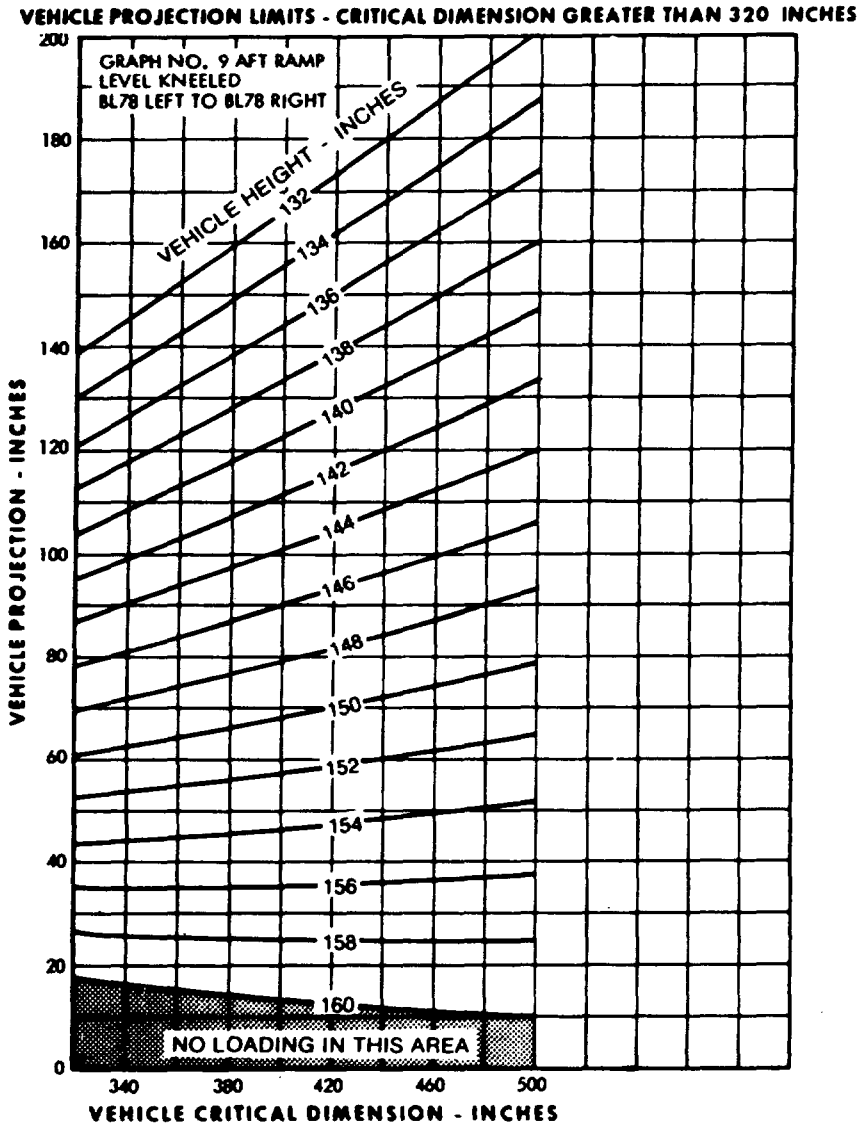

NOTE

1. IF THE VEHICLE KNOWN HEIGHT IS GREATER THAN THE HEIGHT REPRESENTED BY THE CURVE (VEHICLE HEIGHT-INCHES) ON OR ABOVE THE INTERSECTION POINT (OF VEHICLE PROJECTION AND CRITICAL DIMENSION), THE VEHICLE CANNOT BE SAFELY ON/OFF LOADED WITH THE AIRPLANE IN THE CONFIGURATION REPRESENTED BY THIS GRAPH, AND MAY BE ON/OFF LOADED WITH THE AIRPLANE IN THE CONFIGURATION REPRESENTED BY GRAPH NO. 12 OR, USING SPECIAL HANDLING PROCEDURES.

2. IF THE VEHICLE KNOWN HEIGHT IS THE SAME AS OR, LESS THAN THE HEIGHT REPRESENTED BY THE CURVE (VEHICLE HEIGHT-INCHES) ON OR ABOVE THE INTERSECTION POINT (OF VEHICLE PROJECTION AND CRITICAL DIMENSION), THE VEHICLE CAN BE SAFELY ON/OFF LOADED WITH THE AIRPLANE IN THE CONFIGURATION REPRESENTED BY THIS GRAPH OR, IN THE CONFIGURATION REPRESENTED BY GRAPH NO.12

3. IF THE VEHICLE HEIGHT IS 160 INCHES OR GREATER, THE VEHICLE MUST BE ON/OFF LOADED USING SPECIAL HANDLING PROCEDURES.

FIGURE 106. Vehicle projection limits (forward and aft loading). (continued)

Source: https://assist.dla.mil -- Downloaded: 2016-12-11T01:38Z
Check the source to verify that this is the current version before use.

VEHICLE PROJECTION LIMITS - CRITICAL DIMENSION GREATER THAN 320 INCHES

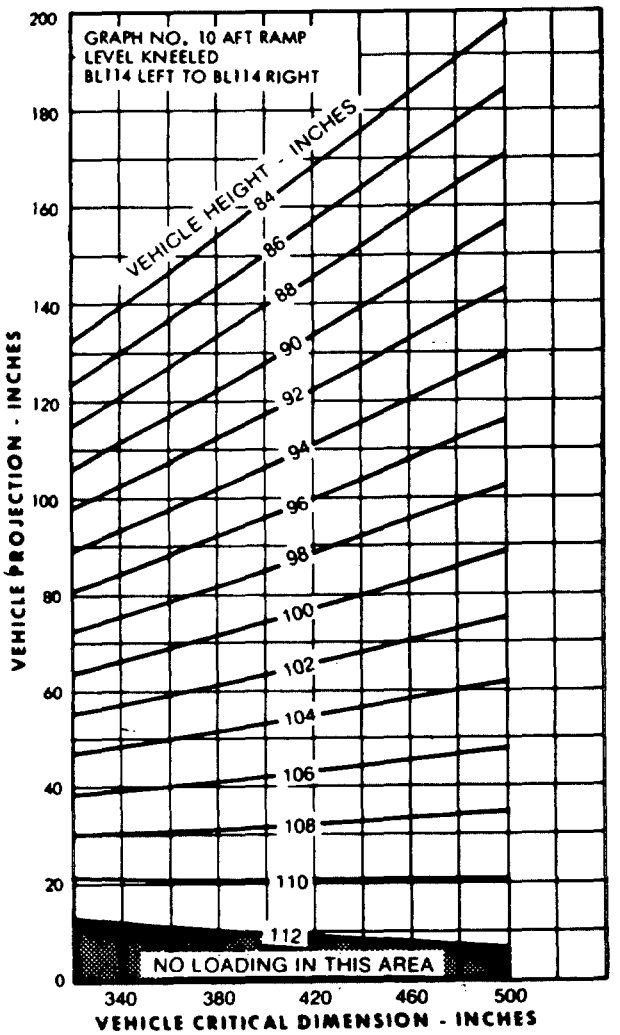

NOTE

1. If the vehicle known height is greater than the height represented by the curve (vehicle height-inches) on or above the intersection point (of vehicle projection and critical dimension), the vehicle cannot be safely on/off loaded with the airplane in the configuration represented by this graph, and may be on/off loaded with the airplane in the configuration represented by either graph No. 8, 9, 10, 11, or 12, or using special handling procedures.

2. If the vehicle known height is the same as or, less than the height represented by the curve (vehicle height-inches) on or above the intersection point (of vehicle projection and critical dimension), the vehicle can be safely on/off loaded with the airplane in the configuration represented by this graph or, in the configuration represented by either graph No. 8, 9, 10, 11, or 12.

3. If the vehicle height is 112 inches or greater, the vehicle must be on/off loaded using special handling procedures.

FIGURE 106. Vehicle projection limits (forward and aft loading). (continued)

Source: https://assist.dla.mil -- Downloaded: 2016-12-11T01:38Z
Check the source to verify that this is the current version before use.

VEHICLE PROJECTION LIMITS - CRITICAL DIMENSION GREATER THAN 320 INCHES

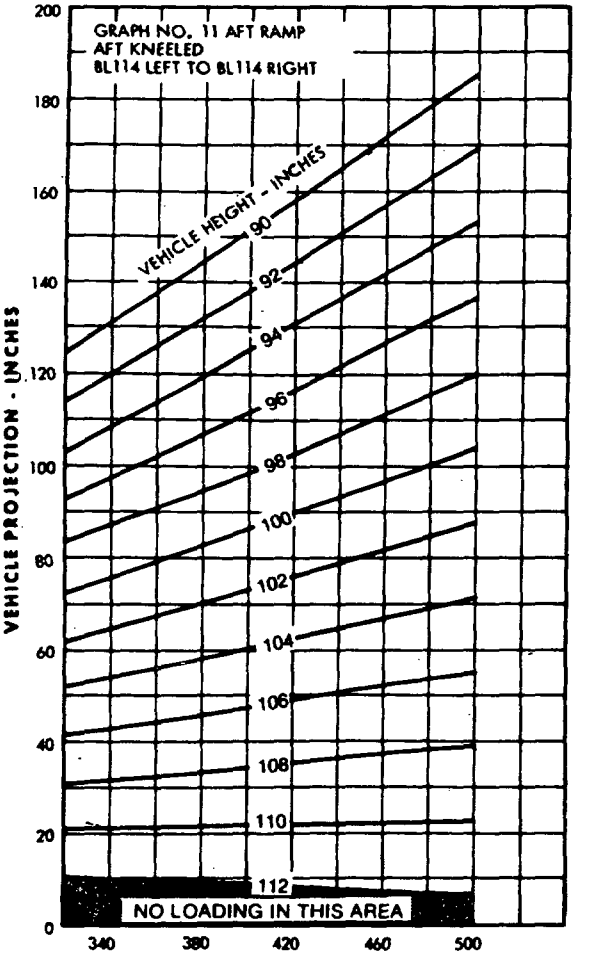

NOTE

1. If the vehicle known height is greater than the height represented by the curve (vehicle height-inches) on or above the intersection point (of vehicle projection and critical dimension), the vehicle cannot be safely on/off loaded with the airplane in the configuration represented by this graph, and may be on/off loaded with the airplane in the configuration represented by either graph No. 8, 9, 11, or 12, or by using special handling procedures.

2. If the vehicle known height is the same as or less than the height represented by the curve (vehicle height-inches) on or above the intersection point (of vehicle projection and critical dimension), the vehicle can be safely on/off loaded with the airplane in the configuration represented by this graph or, in the configuration represented by either graph No. 8, 9, 11, or 12.

3. If the vehicle known height is 112 inches or greater, the vehicle must be on/off loaded using special handling procedures.

FIGURE 106. Vehicle projection limits (forward and aft loading). (continued)

Source: https://assist.dla.mil -- Downloaded: 2016-12-11T01:38Z
Check the source to verify that this is the current version before use.

VEHICLE PROJECTION LIMITS - CRITICAL DIMENSION GREATER THAN 320 INCHES

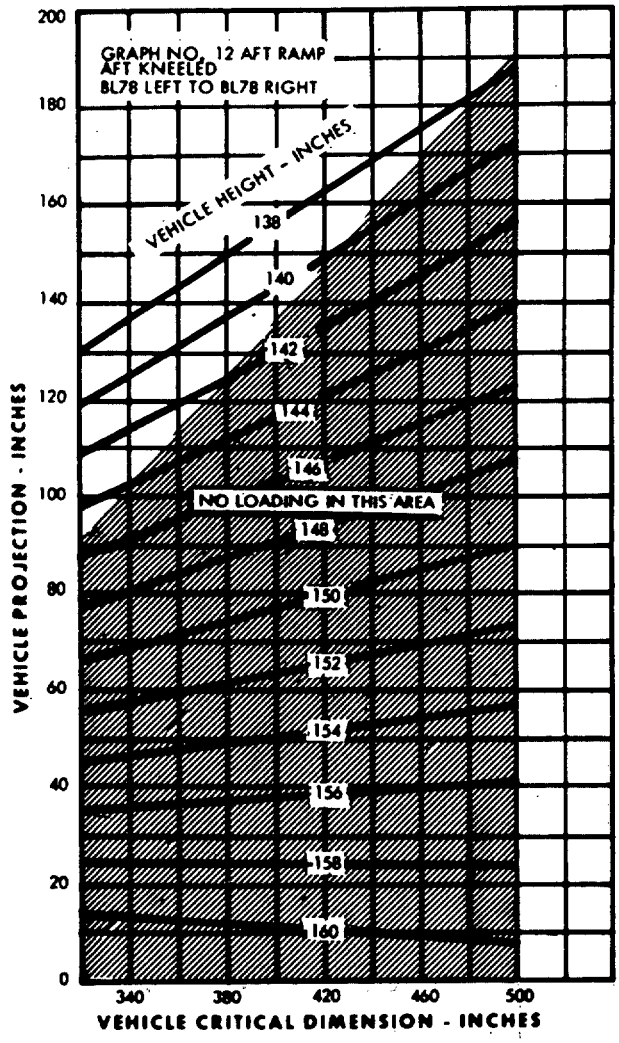

NOTE

1. If the vehicle known height is greater than the height represented by the curve (vehicle height-inches) on or above the intersection point (of the vehicle projection and critical dimension), the vehicle cannot be safely on/off loaded with the airplane in the configuration represented by this graph, and must be on/off loaded with the airplane in the configuration represented by either graph No. 8, 9, or 11 or by using special handling procedures.

2. If the vehicle known height is the same as or, less than the height represented by the curve (vehicle height-inches) on or above the intersection point (of vehicle projection and critical dimension), the vehicle can be safely on?off loaded with the airplane in the configuration represented by either graph No. 8, 9, or 11.

3. If the vehicle projection/critical dimension intersection falls in the shaded area, the vehicle must be on/off loaded using special handling procedures.

FIGURE 106. Vehicle projection limits (forward and aft loading). (continued)

Source: https://assist.dla.mil -- Downloaded: 2016-12-11T01:38Z
Check the source to verify that this is the current version before use.

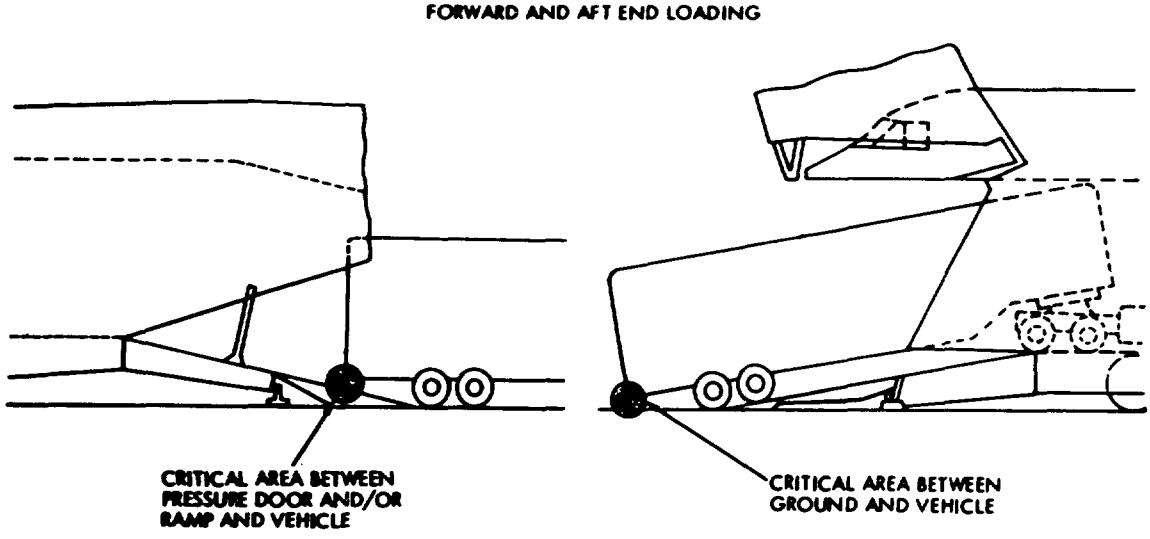

FIGURE 107. Cargo ramp vehicle overhang limits (forward and aft).

Source: https://assist.dla.mil -- Downloaded: 2016-12-11T01:38Z
Check the source to verify that this is the current version before use.

NOTE

1. THE VEHICLE CAN BE SAFELY ON/OFF LOADED WITH THE AIRPLANE IN THE CONFIGURATION REPRESENTED BY ANY ZONE, IF THE INTERSECTION POINT FALLS WITHIN THAT ZONE OR BELOW.
2. IF THE INTERSECTION POINT FALLS ABOVE THE FORWARD KNEELED ZONE, THE VEHICLE MUST BE ON/OFF LOADED WITH THE RAMP AND EXTENSION IN THE TRUCK LOADING POSITION, OR USING SPECIAL HANDLING PROCEDURES.

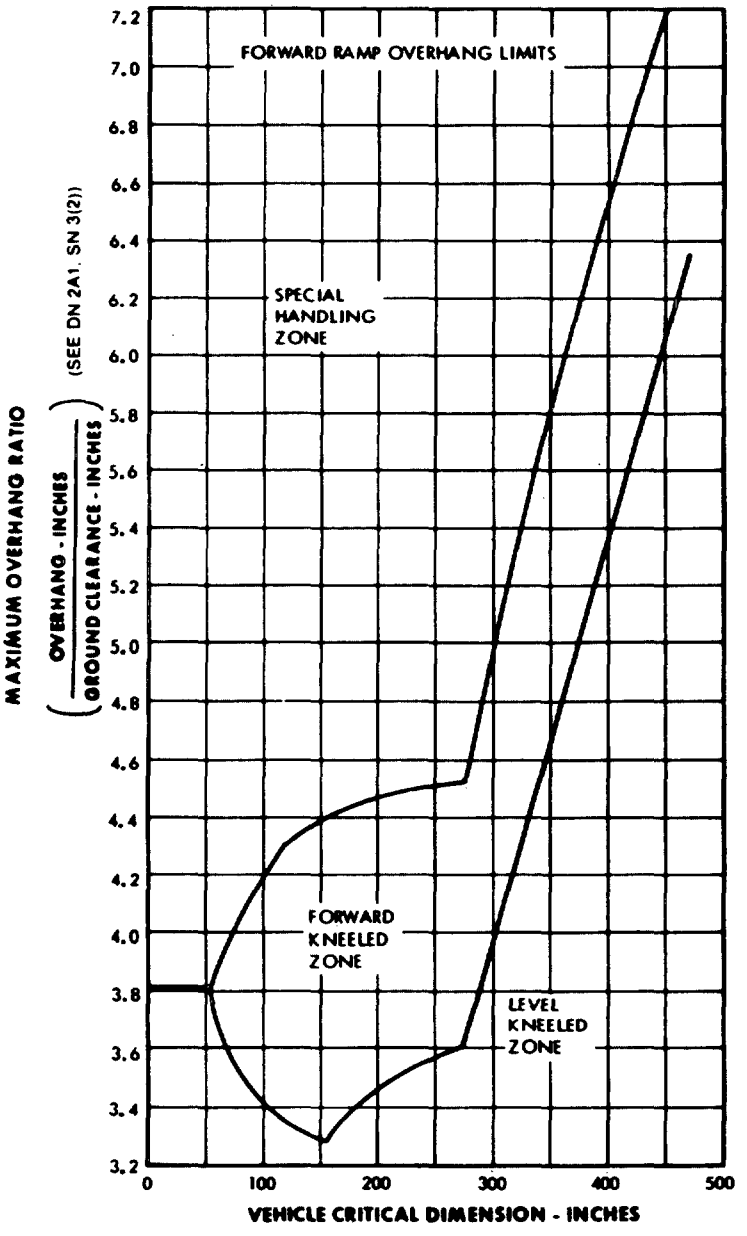

FIGURE 107. Cargo ramp vehicle overhang limits (forward and aft). (continued)

Source: https://assist.dla.mil -- Downloaded: 2016-12-11T01:38Z
Check the source to verify that this is the current version before use.

NOTE

1. THE VEHICLE CAN BE SAFELY ON/OFF LOADED WITH THE AIRPLANE IN THE CONFIGURATION REPRESENTED BY ANY ZONE, IF THE INTERSECTION POINT FALLS WITHIN THAT ZONE OR BELOW.

2. IF THE INTERSECTION POINT FALLS ABOVE THE AFT KNEELED ZONE, THE VEHICLE MUST BE ON/OFF LOADED WITH THE RAMP AND PRESSURE DOOR IN THE TRUCK LOADING POSITION OR, USING SPECIAL HANDLING PROCEDURES.

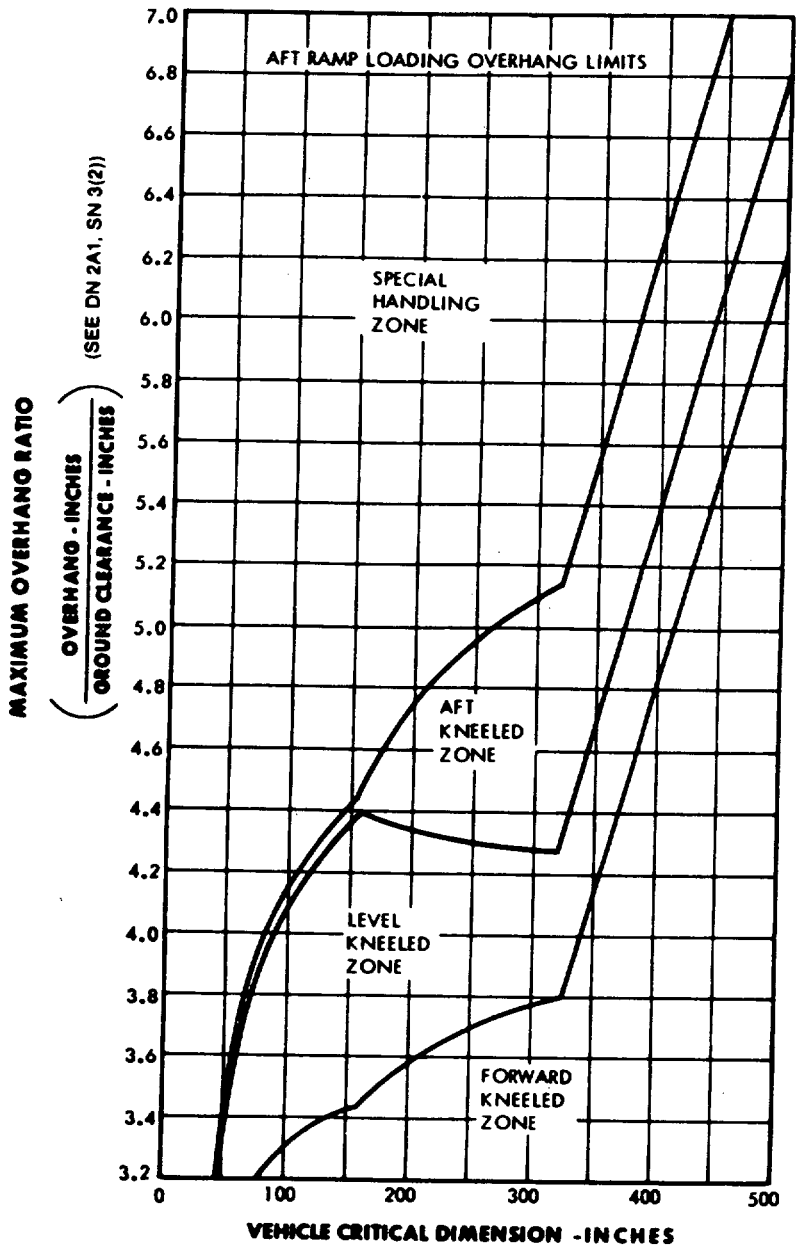

FIGURE 107. Cargo ramp vehicle overhang limits (forward and aft). (continued)

Source: https://assist.dla.mil -- Downloaded: 2016-12-11T01:38Z
Check the source to verify that this is the current version before use.

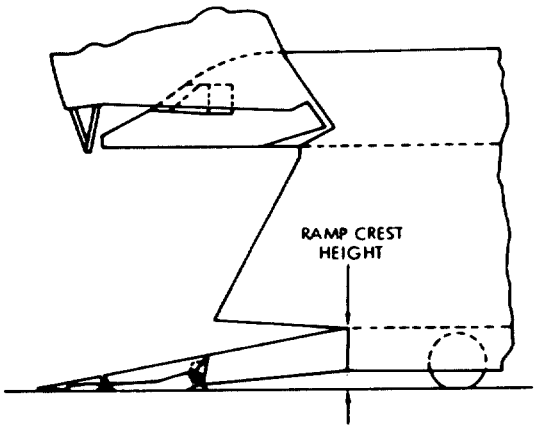

DRIVE IN LOADING FORWARD RAMP CREST HEIGHT

FORWARD KNEEL	57.0 INCHES MAX
LEVEL KNEEL	71.0 INCHES MAX

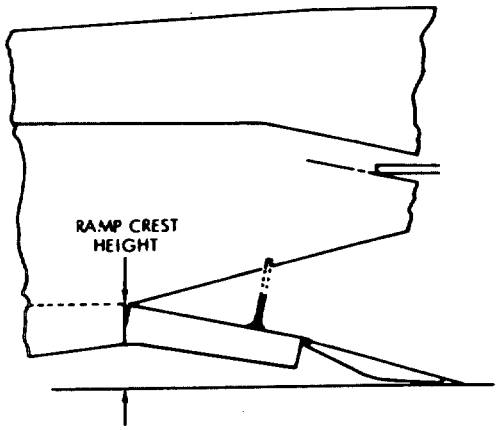

DRIVE IN LOADING AFT RAMP CREST HEIGHT

FORWARD KNEEL	90.0 INCHES MAX
LEVEL KNEEL	79.0 INCHES MAX
AFT KNEEL	62.0 INCHES MAX

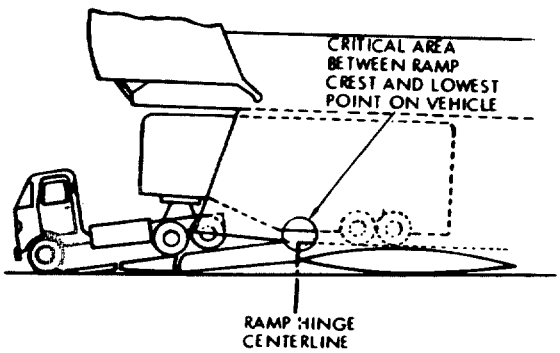

FORWARD END ON/OFF LOADING

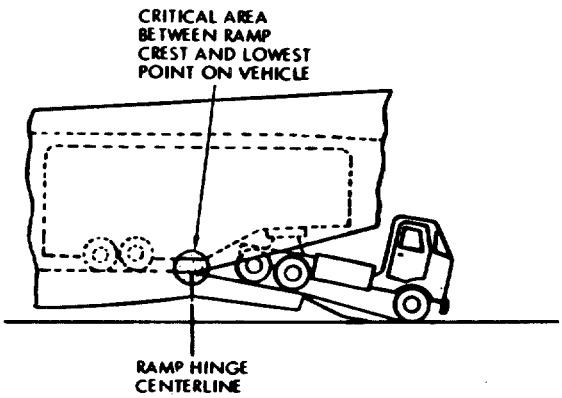

AFT END LOADING

FIGURE 108. Forward and aft ramp crest limits.

Source: https://assist.dla.mil -- Downloaded: 2016-12-11T01:38Z
Check the source to verify that this is the current version before use.

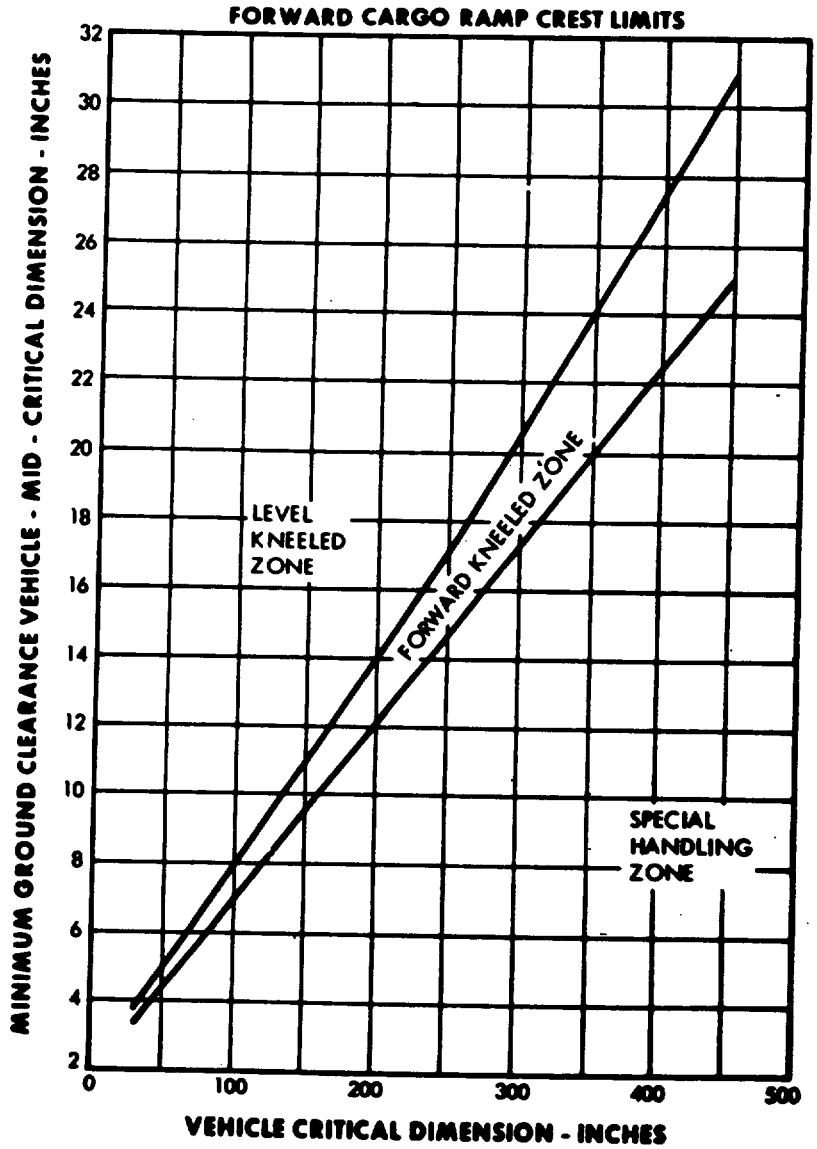

NOTE

1. THE VEHICLE CAN BE SAFELY ON/OFF LOADED, IF THE INTERSECTION POINT FALLS WITHIN OR ABOVE THE AIRPLANE CONFIGURATION ZONE.
2. IF THE INTERSECTION POINT FALLS BELOW THE FORWARD KNEELED ZONE, THE VEHICLE MUST BE ON/OFF LOADED WITH THE RAMP AND EXTENSION IN THE TRUCK LOADING POSITION OR, USING SPECIAL HANDLING PROCEDURES.

FIGURE 108. Forward and aft ramp crest limits. (continued)

Source: https://assist.dla.mil -- Downloaded: 2016-12-11T01:38Z
Check the source to verify that this is the current version before use.

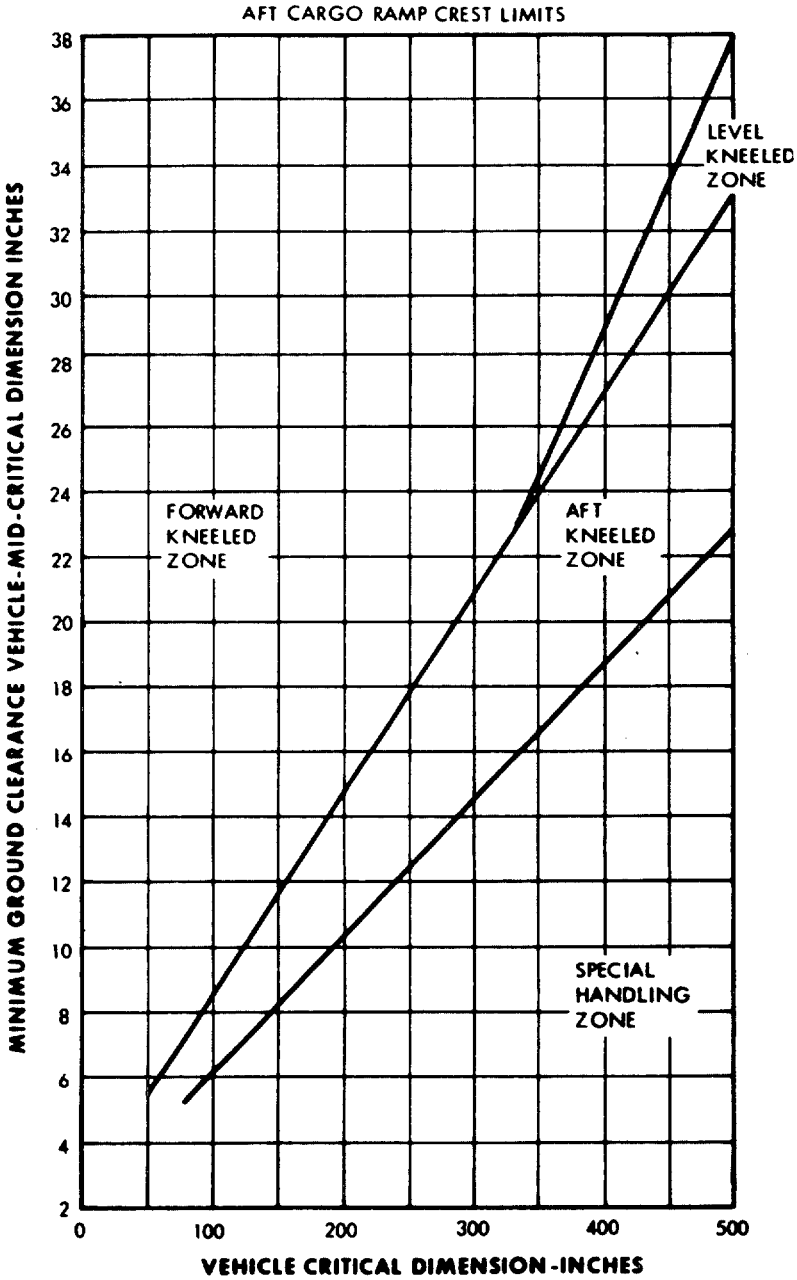

1. THE VEHICLE CAN BE SAFELY ON/OFF LOADED, IF THE INTERSECTION POINT FALLS IN OR ABOVE THE AIRPLANE CONFIGURATION ZONE.

2. IF THE INTERSECTION POINT FALLS BELOW THE AFT KNEELED ZONE, THE VEHICLE MUST BE ON/OFF LOADED WITH THE RAMP AND PRESSURE DOOR IN THE TRUCK LOADING POSITION OR, USING SPECIAL HANDLING PROCEDURES.

FIGURE 108. Forward and aft ramp crest limits. (continued)

Source: https://assist.dla.mil -- Downloaded: 2016-12-11T01:38Z
Check the source to verify that this is the current version before use.

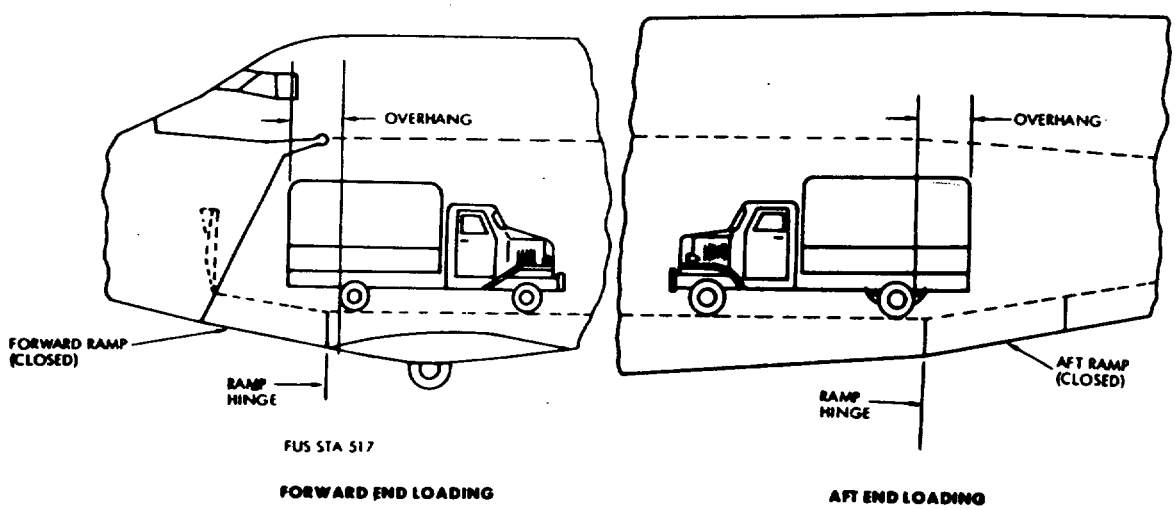

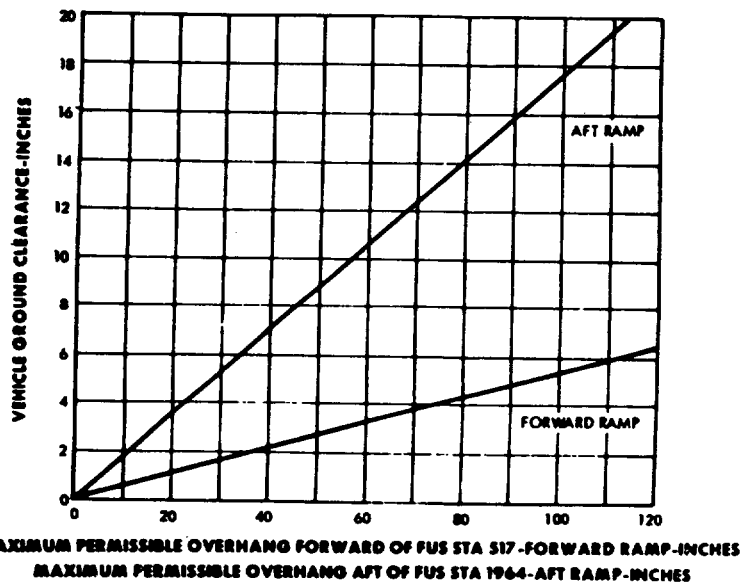

FIGURE 109. Parking area overhang limits.

Source: https://assist.dla.mil -- Downloaded: 2016-12-11T01:38Z
Check the source to verify that this is the current version before use.

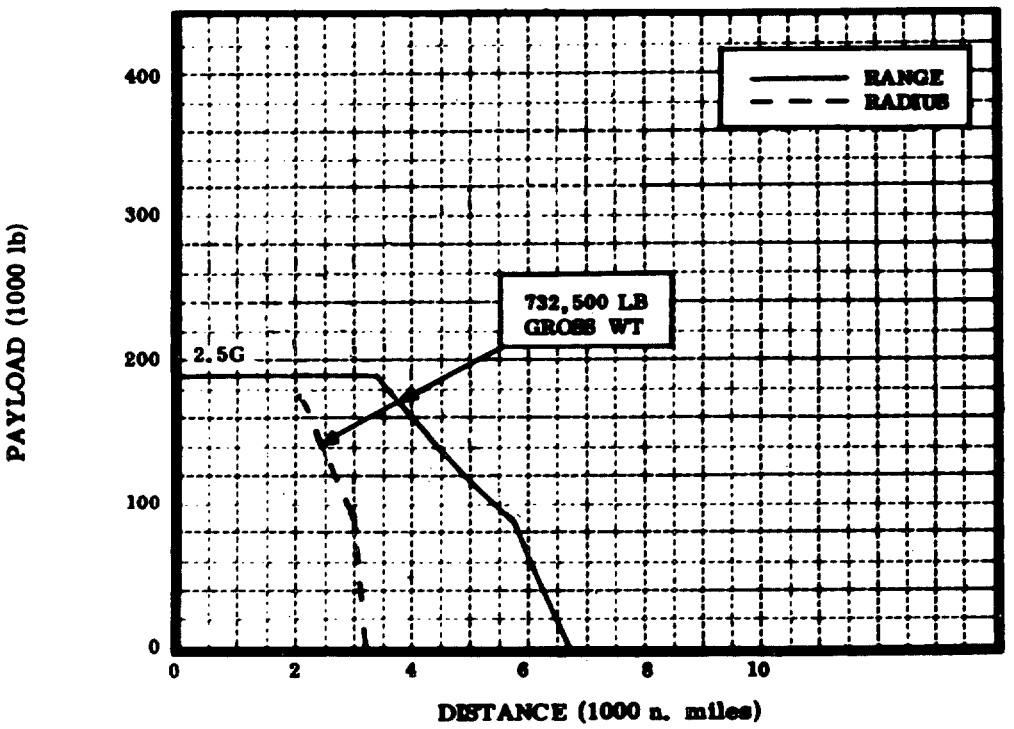

FIGURE 110. Payload distance.

Source: https://assist.dla.mil -- Downloaded: 2016-12-11T01:38Z
Check the source to verify that this is the current version before use.

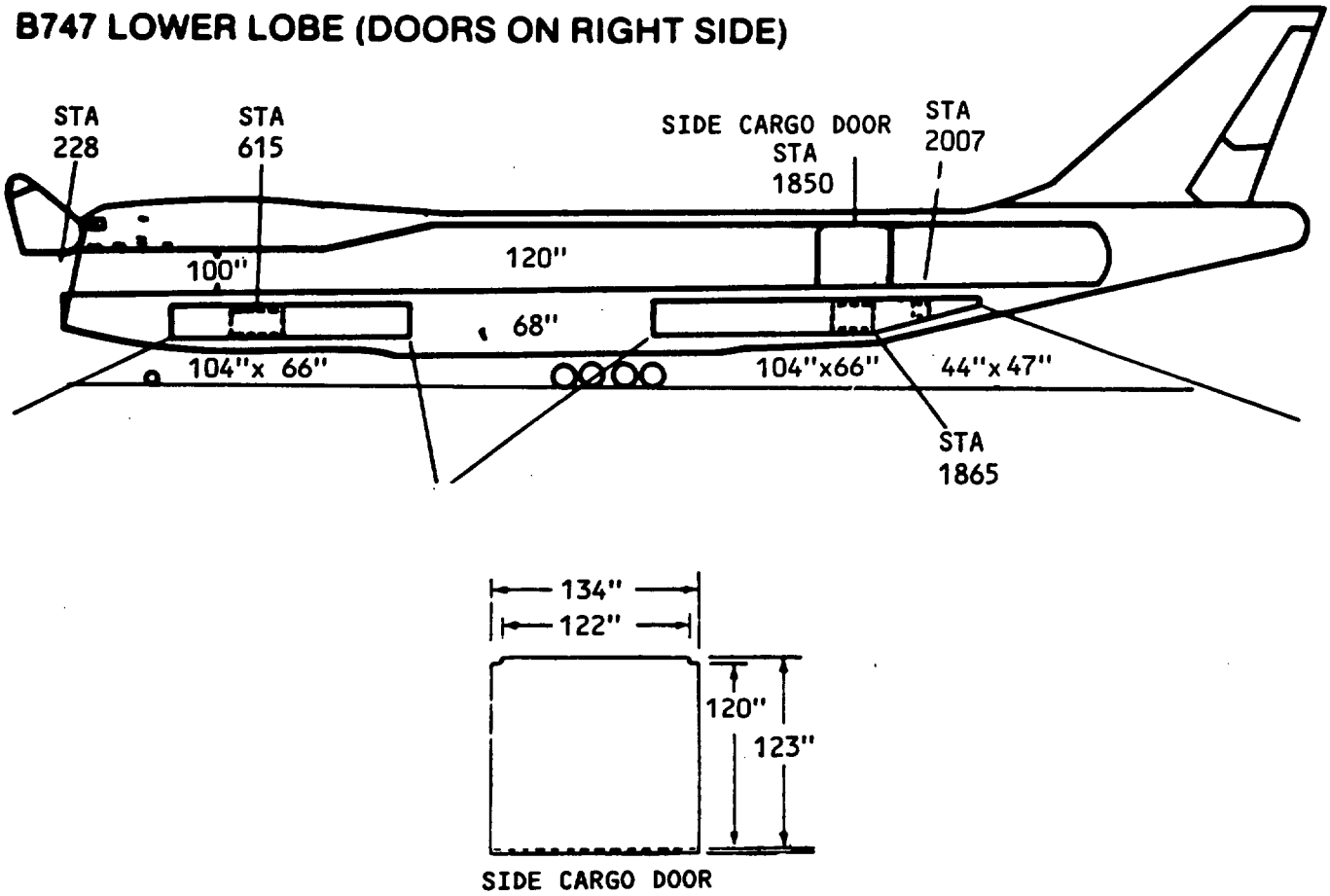

FIGURE 111. B747 lower lobe.

Source: https://assist.dla.mil -- Downloaded: 2016-12-11T01:38Z
Check the source to verify that this is the current version before use.

B747 MAX WEIGHT TABLE, 33 PALLET

NOTE: All weight limitations are for general planning purposes; carrier is final authority

1. All weights are maximums and include weight of pallet and nets.

2. All weights are for 200 series except for those in parentheses () are for 100 series.

3. All weights are for individual pallets.

4. Weights on main deck assume empty lower lobe.

5. Weights in lower lobe assume empty main deck.

6. Combined main deck/lower lobe weights cannot exceed main deck limits on a vertical plan (i.e., 14,000 lbs on pp 18+3 limits LL plt 2 to 4, 000 lbs).

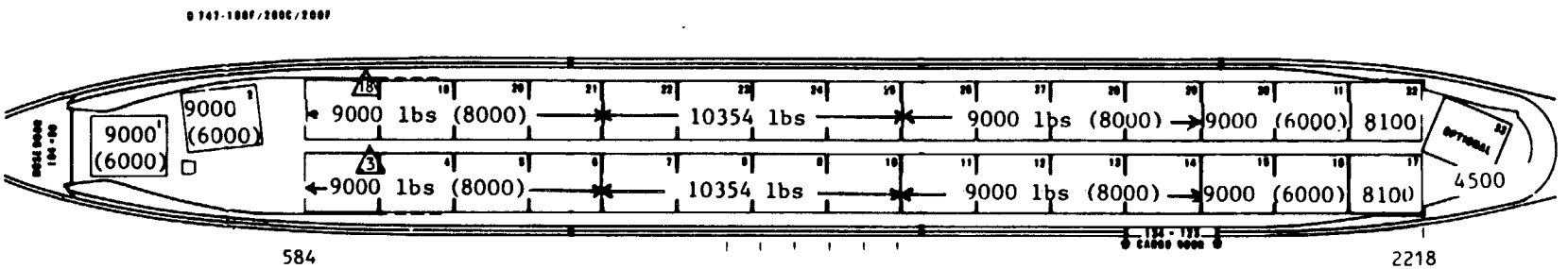

△ Since pp 18 & 3 and lower lobe pp 2 are in a vertical plane, combined pallet wts cannot exceed main deck max (18,000 lbs).

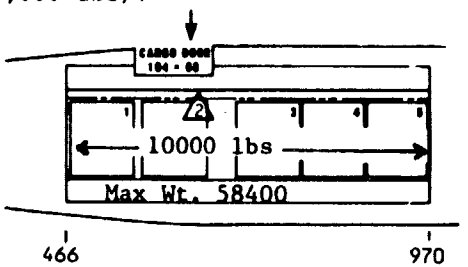

LOWER LOBE CARGO FORWARD ALL MODELS

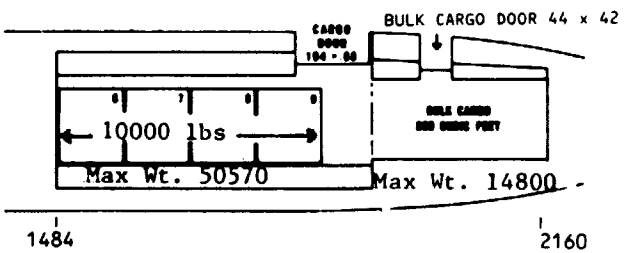

LOWER LOBE CARGO AFT ALL MODELS

FIGURE 112. B747 max weight table, 33 pallet.

Source: https://assist.dla.mil -- Downloaded: 2016-12-11T01:38Z
Check the source to verify that this is the current version before use.

B747 NOSE DOOR OPENING

(96"h x 140"w AT PALLET SURFACE)

NOSE DOOR
OPENING
COORDINATES

*WL	VERT	HORZ
300	96	52.5
282	78	56.5
279	75	62.5
260	56	70.9
250	46	73.6
230	26	74.7
220	16	73.9
210	6	72.2
200	-4	69.9

Pallet Ht 2¼"
Roller Ht 1¾"

*Water Line

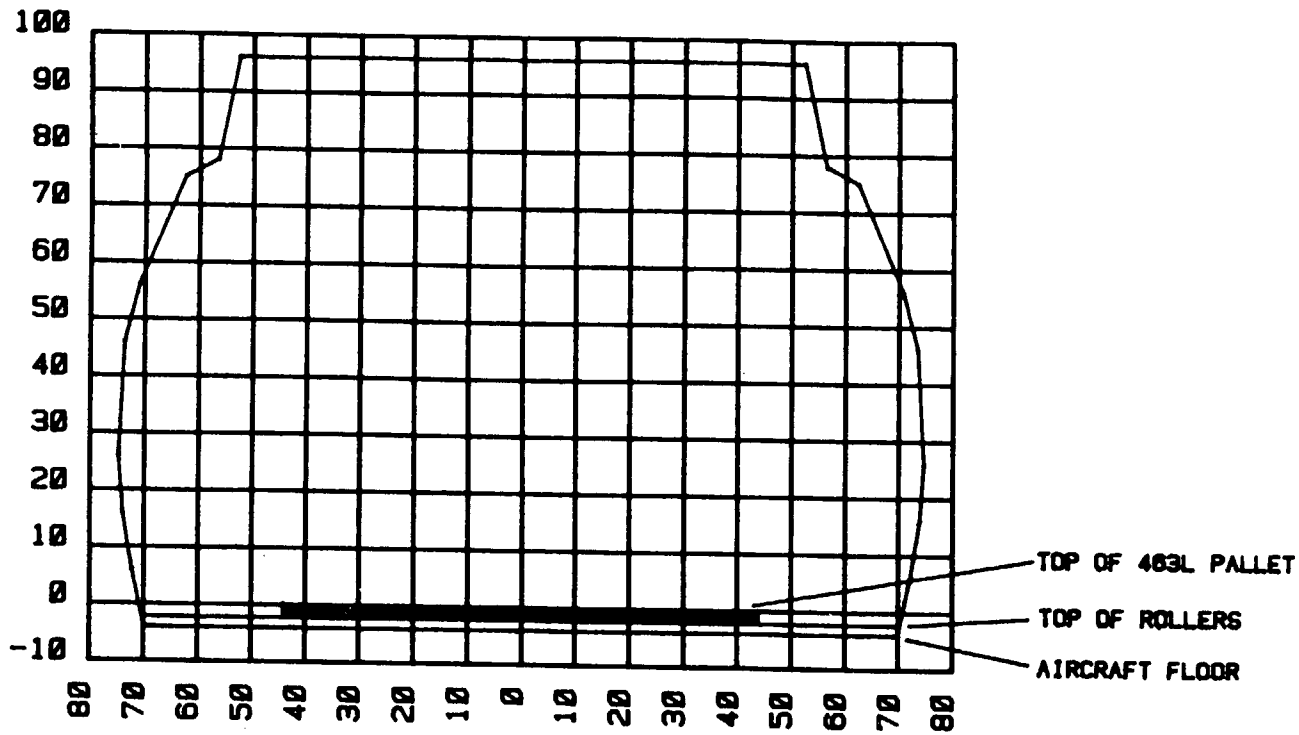

FIGURE 113. B747 nose door opening.

Source: https://assist.dla.mil -- Downloaded: 2016-12-14T01:38Z
Check the source to verify that this is the current version before use.

Maximum package chart for B747 side door (Example--A package 118" high and 70" wide can be up to 259" long and still fit into the main deck.

		WIDTH INCHES (Measured from Bottom of Pallet)													
		10	20	30	40	50	60	70	80	90	100	110	120	130	134
		LENGTH INCHES													
HEIGHT INCHES	120	470	412	367	331	302	280	259	239	219	198	179	161	---	---
	118	470	412	367	331	302	280	259	239	219	198	179	161	144	137
	114	536	458	404	361	326	299	277	256	237	217	196	177	158	153
	108	600	509	441	391	350	318	293	271	251	231	212	192	173	165
	102	600	561	481	418	373	338	309	284	263	243	224	204	185	180
	0-96	600	600	517	447	395	355	323	297	275	254	232	213	186	192

Side cargo door max cargo height calculation:

Door height 123"

(-)	Plt ht	2-1/4"
(-)	Top cl	2"
	Max Ht	118 3/4"

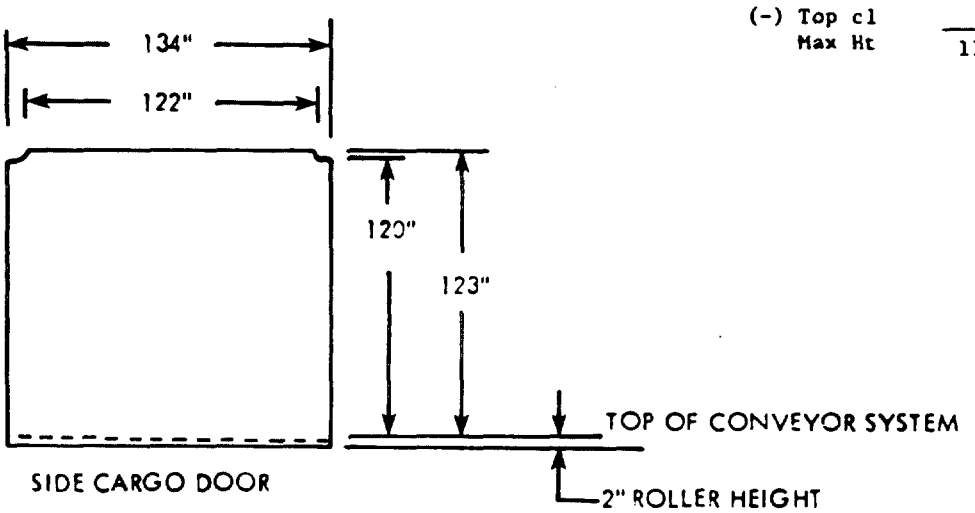

FIGURE 114. B747 side door dimensions/restrictions.

Source: https://assist.dla.mil -- Downloaded: 2016-12-11T01:38Z
Check the source to verify that this is the current version before use.

B747 LOWER LOBE, MAXIMUM LENGTH CHART
(Exception: B747SP, B747-100 American/United Airlines)

This chart can be used to determine the maximum package size which will fit through the 104 by 66-inch door found in the lower lobe of the B747. Example: A package which is 90 inches wide and 60 inches high can be as long as 135 inches and still fit into the cargo compartment through the cargo door. Or, if the package is 80 inches wide and 195 inches long, it can be up to 40 inches high and still fit into the cargo area. However, these charts are for approximate measurements only.

HEIGHT INCHES	WIDTH INCHES 10	20	30	40	50	60	70	80	90	100	104
	LENGTH INCHES										
66	280	245	220	195	170	155	125	125	125	125	125
60	330	285	240	220	196	175	160	145	135	125	125
55	385	325	280	245	215	915	175	155	145	135	135
50	440	360	305	265	230	210	185	165	150	145	140
45	440	430	360	300	260	225	200	170	155	150	140
40	440	440	410	345	290	255	220	195	175	160	155
35	440	440	440	380	330	270	235	205	180	160	155
30	440	440	440	420	345	285	245	210	190	165	160
25	440	440	440	440	360	300	255	220	190	165	160
20	440	440	440	440	385	315	265	225	195	170	160
15	440	440	440	440	415	330	280	235	200	175	160
10	440	440	440	440	440	360	295	245	210	180	165
5	440	440	440	440	440	440	320	265	225	185	170

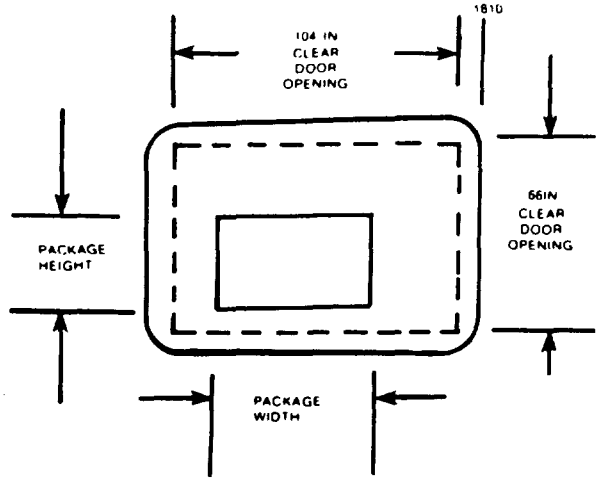

This chart is for the bulk cargo compartment, loading through the 104- by 66-inch door of the aft cargo compartment, but pushing the package in the aft direction into the bulk cargo compartment.

NOTE: A removable curtain separates the two cargo compartments.

FIGURE 115. B747 lower lobe, maximum length chart.

Source: https://assist.dla.mil -- Downloaded: 2016-12-11T01:38Z
Check the source to verify that this is the current version before use.

HEIGHT INCHES	WIDTH INCHES 10	20	30	40	50	60	70	80	90	100
	LENGTH INCHES									
47	140	140	140	140	140	140	140	140	135	120
43	155	155	155	155	155	155	155	145	135	120
39	180	180	180	180	180	175	155	145	135	120
36	200	200	200	200	180	175	160	145	135	120
32	230	230	230	230	205	180	160	145	135	120
24-28	235	235	235	235	215	180	160	145	135	120
4-20	240	240	240	240	215	180	160	145	135	120

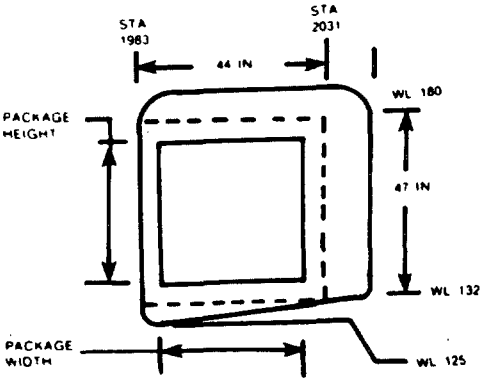

This chart is for the aft bulk cargo compartment, loading through the 44 by 47-inch door, pushing the package in the forward direction into the aft cargo compartment.

NOTE: The block area indicates pushing the package toward the aft section of the aft bulk cargo compartment.

HEIGHT INCHES	WIDTH INCHES 4	8	12	16	20	24	28	32	26	40	44
	LENGTH INCHES										
47	140	140	140	132	126	121	117	114	110	108	108
43	160	160	155	145	140	135	130	125	120	115	110
39	180	165	155	150	140	135	130	125	120	120	120
36	185	170	160	150	145	135	130	125	120	120	120
32	190	175	165	155	150	140	135	130	125	120	120
28	200	185	170	160	155	145	135	130	125	120	120
24	220	190	175	165	155	145	135	130	125	120	120
20	220	195	180	170	155	145	135	130	125	120	120
16	230	205	190	175	160	150	140	135	125	120	120
12	235	220	200	180	165	155	145	135	130	125	120
8	235	235	215	195	175	160	150	140	130	125	120
4	235	235	225	210	185	170	155	145	135	125	120

FIGURE 115. B747 lower lobe, maximum length chart. (continued)

Source: https://assist.dla.mil Downloaded: 2016-12-11T01:38Z
Check the source to verify that this is the current version before use.

(NOTE: Main deckand aft bulk doors are on left side; forward/center lower lobes doors are on right side)

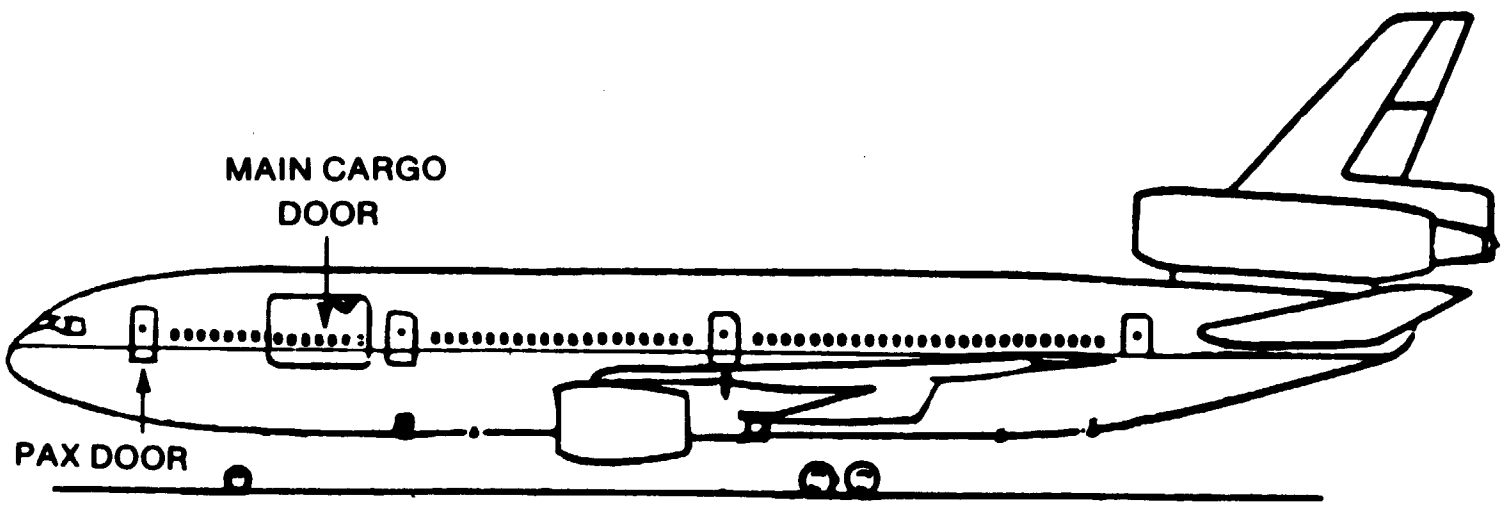

FIGURE 116. DC-10 general information.

Source: https://assist.dla.mil -- Downloaded: 2016-12-11T01:38Z
Check the source to verify that this is the current version before use.

DC-10-30 CF

NOTE 1 THE COMBINED WEIGHT OF LATERAL PALLETS CANNOT EXCEED THE WEIGHTS GIVEN, EXAMPLE: a. PALLET POSITION 1 LEFT AND 1 RIGHT COMBINED LOAD OF 10900 lbs. b. PALLET POSITION 1 RIGHT IS 6450 lbs. PALLET

NOTE 1 THE COMBINED WEIGHT OF LATERAL PALLETS CANNOT EXCEED THE WEIGHTS GIVEN, EXAMPLE: a. PALLET POSITION 1 LEFT AND 1 RIGHT COMBINED LOAD OF 10900 lbs. b. PALLET POSITION 1 RIGHT IS 6450 lbs. c. PALLET POSITION 1 LEFT WEIGHT CANNOT EXCEED 4450 lbs.

NOTE 2 VEHICLES WITH A CAPACITY LARGER THAN ONE-HALF TON SHOULD NOT BE LOADED WITH AXLES POSITIONED LATERALLY. THESE VEHICLES SHOULD BE OFFSET AT LEAST ONE HALF OF THE DIAMETER OF THE WHEEL.

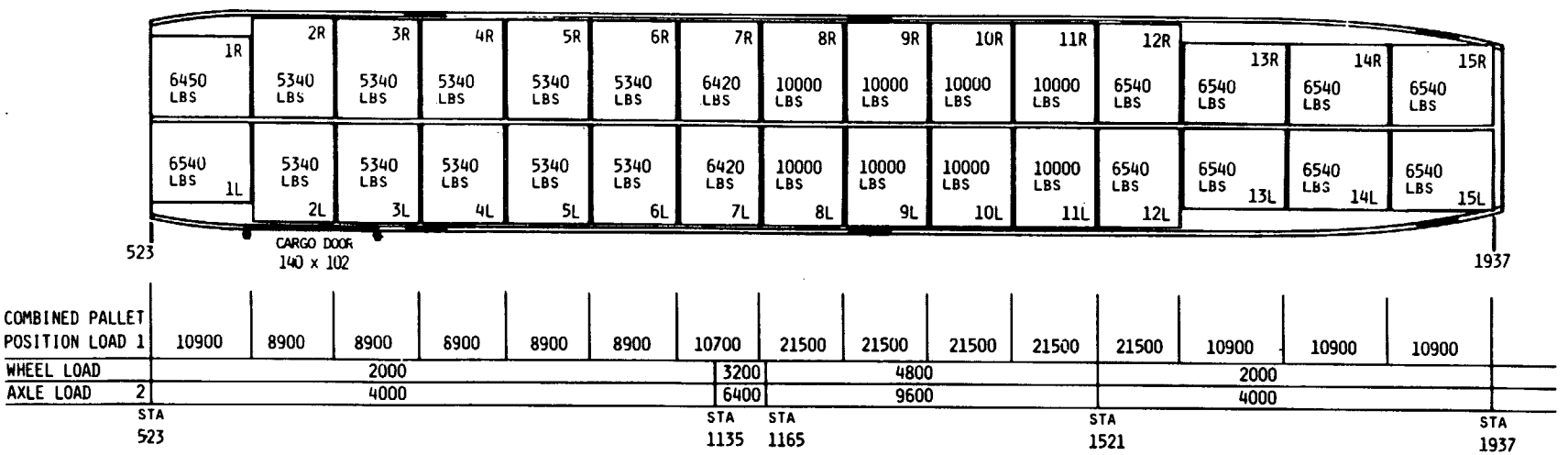

FIGURE 117. DC-10 maximum pallet weights.

Source: https://assist.dla.mil -- Downloaded: 2016-12-11T01:38Z
Check the source to verify that this is the current version before use.

DC-10 Side Door Dimensions/Cargo Restrictions

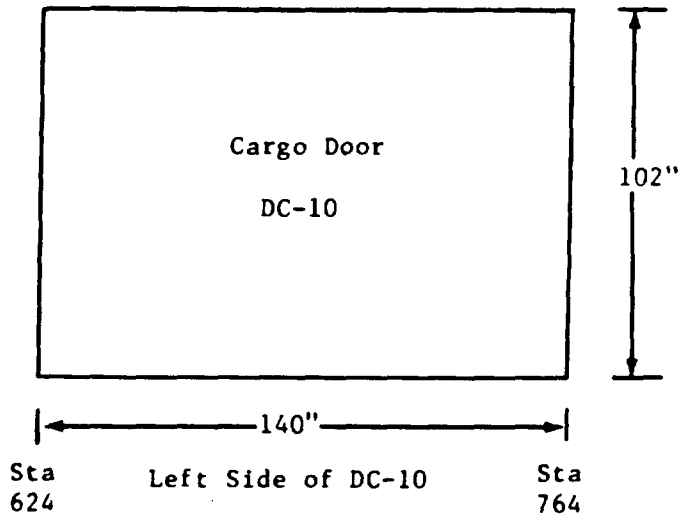

Cargo door max cargo ht calculation:

	Door height	95"
(-)	Roller ht	1 3/4"
(-)	Plt ht	2 1/4"
(-)	Top clearance	2"
	Max ht	89" (1)

(1) Max ht only between Sta 624 & Sta 774.

Maximum package chart for DC-10 side door for cargo pushed toward aft of acft. (Example: A package 60 inches high and 48 inches wide can be up to 482 inches long and fit into cargo area.) Longer vehicles can be loaded due to the variable shape. See paragraph 6-9 for sample cargo capability.

	PACKAGE WIDTH - INCHES										
LENGTH	12	24	36	48	60	72	84	96	108	120	132
HEIGHT 12	1323	1000	730	578	478	402	350	311	280	252	229
24	1323	992	730	578	478	402	350	311	280	252	229
36	1323	982	725	572	472	400	349	308	277	250	228
48	1266	900	675	542	452	390	341	303	275	247	225
60	1016	750	582	482	410	359	318	284	261	242	221
72	800	610	500	425	366	326	288	261	243	224	204
84	620	500	420	363	324	283	256	241	227	202	184

FIGURE 118. DC-10 side door dimensions/cargo restrictions.

Source: https://assist.dla.mil -- Downloaded: 2016-12-11T01:38Z
Check the source to verify that this is the current version before use.

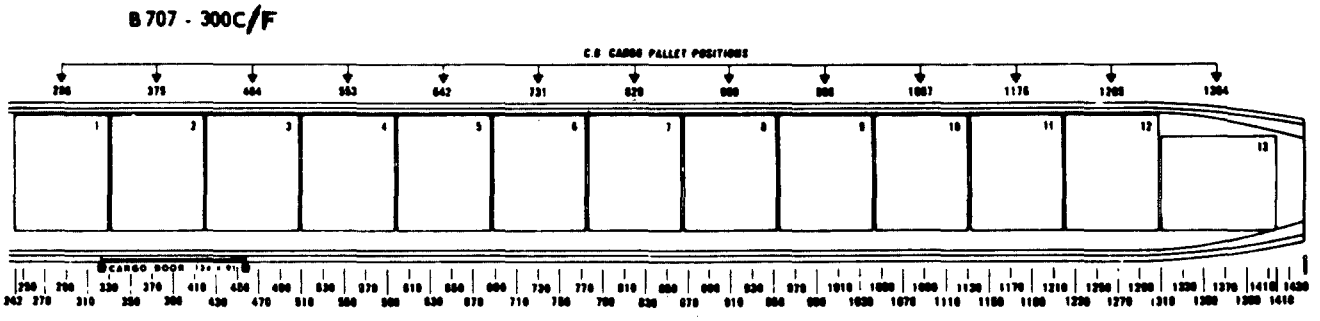

FIGURE 119. B707 main deck.

Source: https://assist.dla.mil Downloaded: 2016-12-11T01:38Z
Check the source to verify that this is the current version before use.

B707 Main Deck Cargo Door

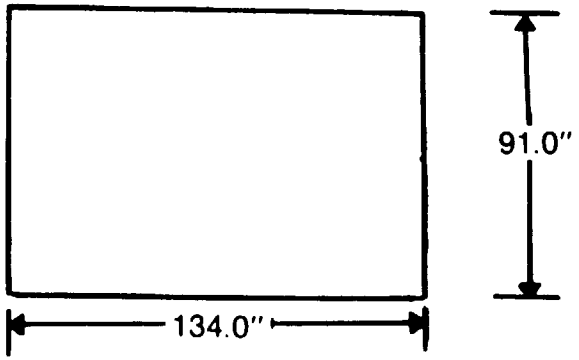

Side Cargo Door
Maximum Height Calculations

	Door Height 91"
(-)	Roller Height 1-3/4"
(-)	Pallet Height 2-1/4"
(-)	Top Clearance 2"
	85" max cargo height

B707 Main Deck
Loading Chart
134" w x 91" h

Upright Loading through Main Cabin Cargo Door with Hat Racks or Bins Removed, Life Rafts Not Installed in Ceiling and Side Wall Protection Added:

HEIGHT INCHES	WIDTH INCHES																
	10	15	20	25	30	35	40	45	50	60	70	80	90	100	110	120	125
	LENGTH INCHES																
0-47	960	773	645	553	484	430	387	351	323	278	243	217	195	176	159	146	140
50	869	710	601	516	455	406	368	337	310	264	235	210	189	171	157	144	
55	723	607	516	456	403	368	335	308	285	248	219	197	178	162	148		
60	602	524	457	405	364	333	307	283	263	231	206	186	168	152			
65	514	448	397	359	327	301	278	258	240	213	190	173	156	139			
70	464	411	370	334	305	281	261	243	227	202	182	164	147				
75	414	369	335	305	281	260	242	227	213	191	172	153					
80	370	332	302	275	253	235	219	205	192	172	151	131					
85	288	263	241	224	207	194	183	172	163	142							
90	187	174	163	152	141	150											

FIGURE 120. B707 main deck cargo door/loading chart.

Source: https://assist.dla.mil -- Downloaded: 2016-12-11T01:38Z
Check the source to verify that this is the current version before use.

DC-8 MAIN DECK CARGO DOOR

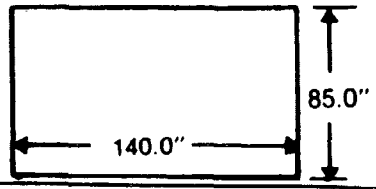

CARGO RESTRICTIONS

Side cargo door	Door height - 85"
Max cargo height	(-) Roller height - 1 1/4"
Calculations	(-) Pallet height - 2 1/4"
	(-) Top Clearance - 2"
	79 1/2"

DC-8-33F/CF
Maximum Package Length - Main Door
for Given Width and Height

Main Cargo Door
140"W x 85" H
Maximum Package Dimensions

HEIGHT IN INCHES

WIDTH	6-48	59	65	71	77	81
6	1061	850	709	554	443	359
12	740	671	567	466	376	318
18	592	551	477	402	332	285
24	504	472	392	353	298	258
30	437	409	364	317	271	237
36	382	360	325	287	248	219
42	342	324	294	261	228	203
48	309	294	269	241	212	190
54	282	270	248	224	199	279
60	259	249	230	208	286	268
66	239	231	214	196	176	160
72	223	215	201	184	166	152
78	209	202	189	174	159	
84	196	190	178	165	151	
90	185	180	169	157	142	
96	175	171	161	150		
102	167	163	154	142		
108	159	155	144			
114	152	148				
120	146					
125	140					

DC-8-61CF/61CF/63F/63CF

Maximum Package Length-Main Door
For Given Width and Height

HEIGHT IN INCHES

WIDTH	6 to 48	54	60	66	72	78	84
6	1170	1128	1012	760	629	496	369
12	861	830	738	630	518	421	325
18	688	660	600	520	441	366	291
24	566	547	503	445	385	327	263
30	478	463	433	389	340	294	239
36	414	403	383	346	305	267	219
42	367	359	342	312	278	245	202
48	330	323	308	283	253	226	188
54	299	293	280	259	233	209	174
60	272	266	257	239	216	195	161
66	249	245	237	221	202	182	148
72	230	226	220	206	189	170	136
78	213	210	206	193	178	160	
84	199	196	192	183	167	149	
90	186	184	181	171	157	140	
96	176	174	171	161	148		
102	165	164	162	152	140		
108	158	157	154	144			
114	151	149	147				
120	146	144	140				
128	140						

FIGURE 121. DC-8 main deck cargo door.

Source: https://assist.dla.mil -- Downloaded: 2016-12-11 01:38Z
Check the source to verify that this is the current version before use.

GENERAL RULES

1. All Cargo must be on a subfloor.
2. Wooden subfloor should be at least 2 inches thick.
3. Pallet weights are figured at 300 pounds, plus 54 pounds for nets/tie-down equipment.
4. Rolling stock on a 463L pallet is limited to 300 psi.

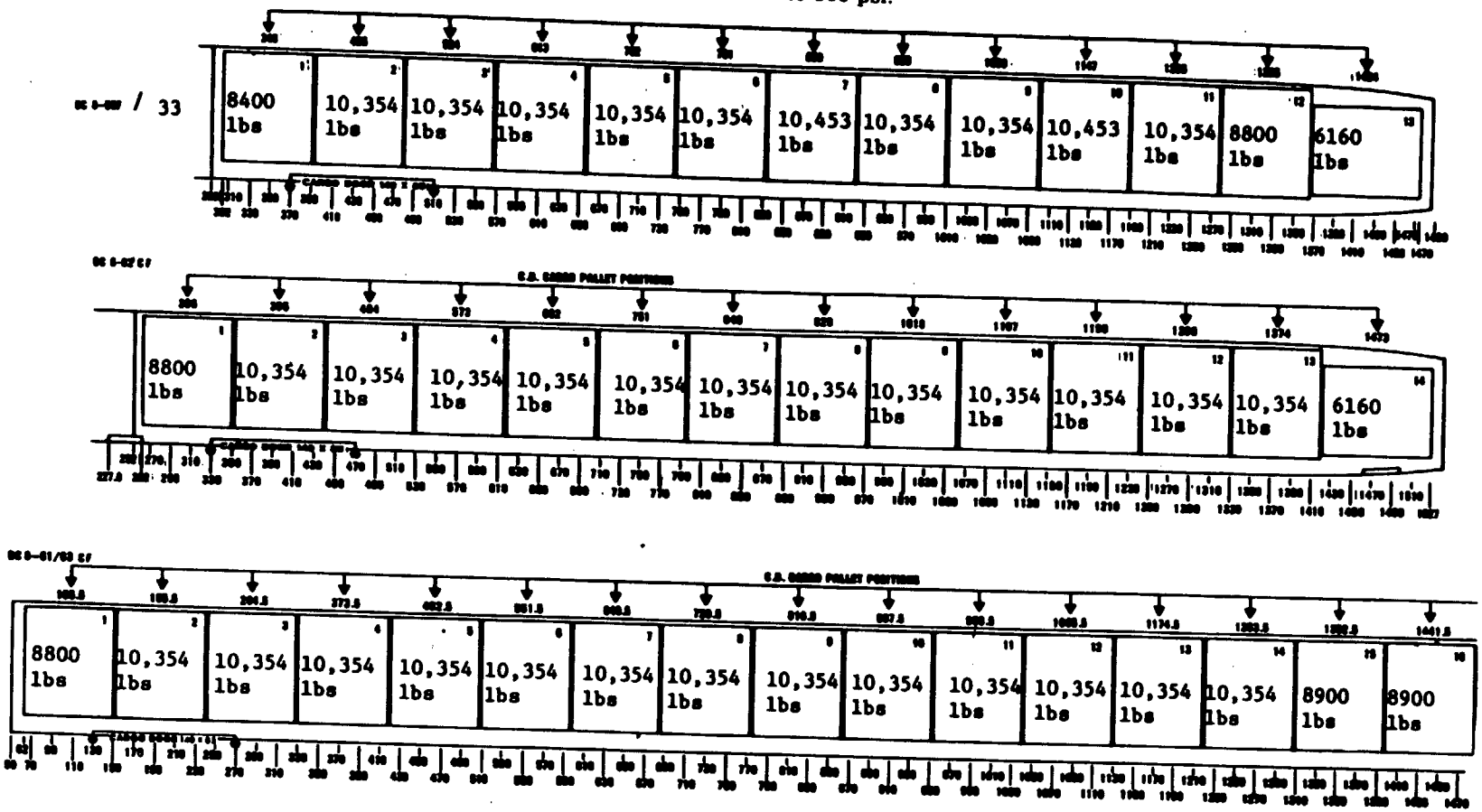

NOTE: ALL PALLET WEIGHTS ARE MAXIMUM AND INCLUDE WEIGHT OF PALLET AND NETS.

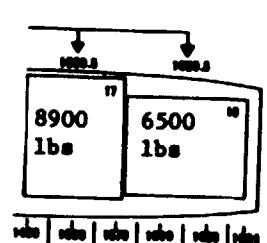

FIGURE 122. Main deck maximum pallet weights.

Source: https://assist.dla.mil -- Downloaded: 2016-12-14T01:38Z
Check the source to verify that this is the current version before use.

STANDARDIZATION DOCUMENT IMPROVEMENT PROPOSAL

(See Instructions – Reverse Side)

1. DOCUMENT NUMBER	2. DOCUMENT TITLE
MIL-STD-1791(USAF)	Designing for Internal Aerial Delivery in Fixed Wing Aircraft

3a. NAME OF SUBMITTING ORGANIZATION	4. TYPE OF ORGANIZATION *(Mark one)*
	☐ VENDOR
b. ADDRESS *(Street, City, State, ZIP Code)*	☐ USER
	☐ MANUFACTURER
	☐ OTHER *(Specify)*: _____

5. PROBLEM AREAS

a. Paragraph Number and Wording:

b. Recommended Wording:

c. Reason/Rationale for Recommendation:

6. REMARKS

7a. NAME OF SUBMITTER *(Last, First, MI)* – Optional	b. WORK TELEPHONE NUMBER *(Include Area Code)* – Optional
c. MAILING ADDRESS *(Street, City, State, ZIP Code)* – Optional	8. DATE OF SUBMISSION *(YYMMDD)*

Source: https://assist.dla.mil -- Downloaded: 2016-12-11T01:38Z
Check the source to verify that this is the current version before use.

INSTRUCTIONS: In a continuing effort to make our standardization documents better, the DoD provides this form for use in submitting comments and suggestions for improvements. All users of military standardization documents are invited to provide suggestions. This form may be detached, folded along the lines indicated, taped along the loose edge *(DO NOT STAPLE)*, and mailed. In block 5, be as specific as possible about particular problem areas such as wording which required interpretation, was too rigid, restrictive, loose, ambiguous, or was incompatible, and give proposed wording changes which would alleviate the problems. Enter in block 6 any remarks not related to a specific paragraph of the document. If block 7 is filled out, an acknowledgement will be mailed to you within 30 days to let you know that your comments were received and are being considered.

NOTE: This form may not be used to request copies of documents, nor to request waivers, deviations, or clarification of specification requirements on current contracts. Comments submitted on this form do not constitute or imply authorization to waive any portion of the referenced document*(s)* or to amend contractual requirements.

(Fold along this line)

(Fold along this line)

DEPARTMENT OF THE AIR FORCE
ASD/ENES
Wright-Patterson AFB OH 45433-6503

NO POSTAGE NECESSARY IF MAILED IN THE UNITED STATES

BUSINESS REPLY MAIL
FIRST CLASS PERMIT NO. 73236 WASHINGTON D. C.

POSTAGE WILL BE PAID BY THE DEPARTMENT OF THE AIR FORCE

ASD/ENES
Wright-Patterson AFB OH 45433-6503

Source: https://assist.dla.mil -- Downloaded: 2016-12-11T01:38Z
Check the source to verify that this is the current version before use.