[INCH-POUND]

MIL-C-38999J
06 April 1990
SUPERSEDING
MIL-C-38999H
27 February 1981

MILITARY SPECIFICATION

CONNECTORS, ELECTRICAL, CIRCULAR, MINIATURE, HIGH DENSITY, QUICK DISCONNECT (BAYONET, THREADED, AND BREECH COUPLING), ENVIRONMENT RESISTANT, REMOVABLE CRIMP AND HERMETIC SOLDER CONTACTS, GENERAL SPECIFICATION FOR

This specification is approved for use by all Departments and Agencies of the Department of Defense

1 SCOPE

1 1 Scope. This specification covers four series of miniature, high density, bayonet, threaded, or breech coupling, circular, environment resistant, electrical connectors using removable crimp or fixed hermetic solder contacts, and are capable of operation within a temperature range of -65°C to +200°C (see 1.2.1.1). These connectors are supplied under a MIL-STD-790 reliability assurance program Statistical process control (SPC) techniques are required in the manufacturing process to minimize variation in production of connectors supplied to the requirements of this specification. See 6 1 for restrictions on intended use and applications

1 2 Description All series include rear release removable pin and socket contacts with crimp termination. All series are designed to assure proper orientation of the mating halves prior to electrical circuit closure All series include hermetically sealed receptacles with fixed contacts for solder termination All series include EMI shielding capability Series I, III, and IV connectors with conductive finishes provide electrical continuity between mated shells prior to contact engagement and have the contacts so located as to be protected from handling damage and inadvertent electrical contact Series II provides low silhouette for minimum size and weight and includes connectors which provide shell-to-shell electrical continuity when mated

1 2 1 Design considerations Connectors are capable of satisfactory performance during or after, as applicable, subjection to the following environmental conditions

1 2 1 1 Temperature Connectors are finish or class dependent -65°C to +150°C, +175°C, or +200°C (see 1 3 1d).

Beneficial comments (recommendations, additions, deletions) and any pertinent data which may be of use in improving this document should be addressed to 2750 Air Base Wing Electronic Support Division (2750 ABW/ES) Gentile AFS, Dayton, OH 45444, by using the self-addressed Standardization Document Improvement Proposal (DD Form 1426) appearing at the end of this document or by letter

DISTRIBUTION STATEMENT A Approved for public release, distribution is unlimited

Source: https://assist.dla.mil -- Downloaded: 2016-11-16T13:24Z
Check the source to verify that this is the current version before use.

1 2 1 2 Vibration

a Random of 41 7 G rms·
Series II At ambient temperature
Series III· At rated high temperature with simulated accessory load
Series I and IV At ambient temperature with simulated accessory load

b Random of 49 5 G rms· Series I, III, and IV· At ambient temperature

c Sine·
Series I and IV 30 G at ambient temperature with simulated accessory load
Series III· 60 G with temperature cycling and simulated accessory load

1 2 1 3 Altitude Altitudes from sea level to 100,000 feet (8 torr) Test voltage will vary with altitude (see table XIV)

1 2 1 4 Shock (all series and classes) Shock as represented by a 3 ql milliseconds base half-sine wave peaking at 300 G (see 3 27)

1 2 1 4 1 High-impact shock (series I, III, and IV) In accordance with MIL-S-901, with appropriate MIL-C-85049 accessories (see 3 27)

1 2 1 5 Humidity Humidity conditions up to 98 percent relative humidity including condensation (see 3 29)

1 2 1 6 Corrosion Exposure to salt-laden atmosphere (see 3 16)

1 2 1 7 Thermal shock and temperature cycling

a Hermetics - see 3 7

b Non-hermetics - see 3 8

1 2 1 8 Immersion Immersion in jet fuel, lubrication oil, liquid coolant hydraulic fluid, gasoline, cleaning compound, defrosting fluid, and solvents (see 3 33)

1 2 1 9 EMI shielding EMI shielding effectiveness with electroless nickel plating of (see 3 31)·

Series I 100 MHz to 10 GHz - minimum attenuation of 50 dB
Series II 100 MHz to 1 GHz - minimum attenuation of 45 dB
Series III and IV 100 MHz to 10 GHz - minimum attenuation of 65 dB

1 2 1 10 Firewall protection Firewall protection (classes K and S) 1,093xC for 20 minutes (see 3 39)

1 2 1 11 Electrolytic erosion (series III and IV) Exposure of uncoupled connectors to a salt moisture environment (see 3 38)

1 3 Classification

1 3 1 Connectors Connectors fabricated to this specification are classified as follows·

a Series The series I, II, III, and IV connectors are not interchangeable or intermateable

I - Scoop-proof, bayonet coupling
II - Non-scoop-proof, bayonet coupling, low silhouette
III - Scoop-proof, triple start, self-locking, threaded coupling
IV - Scoop-proof, breech coupling

Source: https://assist.dla.mil -- Downloaded: 2016-11-16T13:24Z
Check the source to verify that this is the current version before use.

b Types

(1) Plugs

Straight, without spring fingers
Straight, with spring fingers that make contact to receptacle shell prior to contact engagement
Straight with spring fingers that make contact to receptacle shell after contacts engage.
Lanyard release

(2) Receptacles

Box mounting, both front and rear panel mounting
Wall mounting, both front and rear panel mounting
Jam-nut, rear panel mounting
Solder mounting
Thru-bulkhead

c Classes

Series I and II:

E - Environment resisting - Box and thru-bulkhead mounting receptacle types Other types with rear accessory nut are inactive for new design
G - Environment resisting - wall and jam nut mounting receptacle and plug types, space grade
H - Hermetically sealed - space grade
P - For potting - Includes potting form and short rear grommet (inactive for new design for Air Force).
T - Environment resisting - Wall and jam-nut mounting receptacle and plug types. These designs incorporate provision (thread and teeth) for rear accessory attachment.
Y - Hermetically sealed

Series III and IV

C - Environment resisting - Nonconductive plating
F - Environment resisting - Conductive plating
G - Environment resisting - Conductive plating, space grade
J - Environment resisting - Corrosion resistant composite
H - Hermetically sealed - Corrosion resistant steel, passivated, space grade
K - Environment resisting - Corrosion resistant steel with firewall barrier
W - Environment resisting - Corrosion resistant plating
Y - Hermetically sealed - Corrosion resistant steel, passivated
N - Hermetically sealed - Corrosion resistant steel, electro-deposited nickel
M - Environment resisting - Corrosion resistant composite
S - Environment resisting with firewall barrier, corrosion resistant steel - Electrodeposited nickel

Source: https://assist.dla.mil -- Downloaded: 2016-11-16T13:24Z
Check the source to verify that this is the current version before use.

d Temperature ranges

Series I and II finishes

A - Silver to light iridescent yellow color cadmium plate over nickel (conductive) -65°C to +150°C (inactive for new design)
B - Olive-drab cadmium plate over a suitable underplate (conductive) -65°C to +175°C.
C - Anodic (nonconductive) -65°C to +200°C
D - Fused tin, carbon steel (conductive) -65°C to +150°C
E - Corrosion resistant steel, passivated (conductive) -65°C to +200°C
F - Electroless nickel coating (conductive) -65°C to +200°C
N - Hermetic seal or environment resisting corrosion resistant steel (conductive plating) -65°C to +200°C

Series III and IV classes

C - Anodic (nonconductive) -65°C to +200°C
F - Electroless nickel coating (conductive) -65°C to +200°C
G - Same as F but space grade.
J - Olive-drab cadmium plate, composite, (conductive) -65°C to +175°C
H - Same as Y but space grade
K - Corrosion resistant steel passivated (conductive) -65°C to +200°C
S - Corrosion resistant steel with electrodeposited nickel plating (conductive) -65C° to +200°C
W - Olive-drab cadmium plate over a suitable underplate (conductive) -65°C to +175°C
Y - Corrosion resistant steel passivated (conductive) -65°C to +200°C
N - Corrosion resistant steel with electrodeposited nickel plating (conductive) -65°C to +200°C
M - Electroless nickel coating, composite, (conductive) -65°C to +200°C

e Contact styles

(1) Connectors used with standard contact arrangements as indicated in MIL-STD-1560 are as follows

P - Pin - Including hermetics with solder cups, 500-cycle contact
S - Socket - Including hermetics with solder cups, 500-cycle contact
H - Pin - 1500-cycle contact
J - Socket - 1500-cycle contact
X - Pin - With eyelet (hermetic)
Z - Socket - With eyelet (hermetic)
C - Feedthrough

The P, S, H, J, X, Z, or C designators are used to indicate that connectors will be used with full compliments of the applicable standard contacts as indicated in MIL-STD-1560

Source: https://assist.dla.mil -- Downloaded: 2016-11-16T13:24Z
Check the source to verify that this is the current version before use.

The connectors that accommodate crimp removable contacts (P, S, H, and J) may be ordered without standard contacts by adding an appropriate note on the purchase order, however, the connector part numbers and the marking requirements remain unchanged (see 3.4.1.1, 3 43, and 6.2).

(2) Connectors used with other than standard contact arrangements as indicated in MIL-STD-1560 are as follows

A - Pin contact insert.
B - Socket contact insert

The A and B designators are used to indicate that the connectors will be used with other than standard contacts as indicated in MIL-STD-1560 (example: shielded, coaxial thermocouple, fiber optic contacts) The A and B designators are part of the connector part numbers and shall be marked on the connectors

The standard contacts shall not be supplied with the connectors The contacts that will be used with the connectors must be ordered separately (see 3.4.1.1, 3.43, and 6.2).

Note When other than standard power contacts are used, the requirements stated herein may not be met

2 APPLICABLE DOCUMENTS

2 1 Government documents.

2 1 1 Specifications, standards, and handbooks The following specifications, standards, and handbooks form a part of this document to the extent specified herein Unless otherwise specified, the issues of these documents are those listed in the issue of the Department of Defense Index of Specifications and Standards (DODISS) and supplement thereto, cited in the solicitation (see 6 2).

SPECIFICATIONS

FEDERAL

QQ-N-290	-	Nickel Plating (Electrodeposited)
QQ-P-416	-	Plating, Cadmium (Electrodeposited)

MILITARY

MIL-C-17	-	Cables, Radio Frequency, Flexible and Semirigid, General Specification For
MIL-S-901	-	Shock Tests, H I (High-Impact), Shipboard Machinery, Equipment and Systems, Requirements For
MIL-T-5624	-	Turbine Fuel, Aviation, Grades JP-4 and JP-5
MIL-S-7742	-	Screw Threads, Standard, Optimum Selected Series, General Specification For
MIL-A-8625	-	Anodic Coatings, for Aluminum and Aluminum Alloys
MIL-T-10727	-	Tin Plating, Electrodeposited or Hot-dipped for Ferrous and Nonferrous Metals
MIL-C-22520	-	Crimping Tools, Terminal, Hand or Power Actuated Wire Termination, and Tool Kits General
MIL-W-22759	-	Wire, Electric, Fluoropolymer-Insulated, Copper or Copper Alloy
MIL-W-25038	-	Wire, Electrical, High Temperature and Fire Resistant, General Specification For
MIL-C-26074	-	Coating, Electroless Nickel, Requirements For
MIL-C-27599	-	Connectors Electrical, Circular, Miniature, High Density, Quick Disconnect, Environment Resistant, Solder contacts, General Specification For

Source: https://assist.dla.mil -- Downloaded: 2016-11-16T13:24Z
Check the source to verify that this is the current version before use.

MIL-C-39029	-	Contacts, Electrical Connector, General Specification For
MIL-G-45204	-	Gold Plating, Electrode Deposited
MIL-A-46146	-	Adhesive Sealants, Silicone, RTV, Non-corrosive (For use with Sensitive Metals and Equipment)
MIL-C-55330	-	Connectors Preparation for Delivery of
MIL-W-81381	-	Wire, Electric, Polyimide-Insulated, Copper or Copper Alloy
MIL-I-81969	-	Installing and Removal Tools, Connector, Electrical Contact, General Specification For
MIL-C-85049	-	Connector Accessories, Electrical, General Specification for

STANDARDS

FEDERAL

FED-STD H28	-	Screw-Thread Standards for Federal Services

MILITARY

MIL-STD-105	-	Sampling Procedures and Tables for Inspection by Attributes
MIL-STD-202	-	Test Methods for Electronic and Electrical Component Parts
MIL-STD-454	-	Standard General Requirements for Electronic Equipment
MIL-STD-790	-	Reliability Assurance Program for Electronic Parts Specifications
MIL-[illegible]		Marking of Electrical and Electronic Parts
MIL-STD-1344	-	Test Methods for Electrical Connectors
MIL-STD-1373	-	Screw Thread, Modified, 60 Degrees, Stub, Double
MIL-STD-1560	-	Insert Arrangements for MIL-C-38999 and MIL-C-27599 Electrical Circular Connectors
MIL-STD-45662	-	Calibration System Requirements
MS3186	-	Connector Mounting to Connectors, Mounting Nuts, Plain Hexagon
MS9068	-	Packing Preformed - AMS 3304 or AMS 3325 or AMS 3326
MS27488	-	Plug, End Seal, Electrical Connector
MS27496	-	Connector, Receptacle, Electrical, Box Mounting, Crimp Type, Bayonet Coupling, Series I
MS27499	-	Connector, Receptacle, Electrical, Box Mounting Flange, Crimp Type, Bayonet Coupling, Series II
MS27505	-	Connector, Receptacle, Electrical, Back Panel, Box Mounting Flange, Crimp Type, Bayonet Coupling, Series I
MS27508	-	Connector Receptacle, Electrical, Back Panel Box Mounting Flange, Crimp Type, Bayonet Coupling, Series II
MS90376	-	Caps, Dust, Plastic, Electric Connector

(See supplement 1 for list of associated specification sheets and military standards)

(Unless otherwise indicated, copies of federal and military specifications, standards, and handbooks are available from the Naval Publications and Forms Center, (ATTN NPODS), 5801 Tabor Avenue, Philadelphia, PA 19120-5099)

2 1 2 Other Government documents, drawings, and publications The following other Government documents drawings, and publications form a part of this document to the extent specified herein Unless otherwise specified, the issues are those cited in the solicitation

NASA

NASA Reference Publication 1124 Revised - Outgassing Data for Selecting Spacecraft Materials

Source: https://assist.dla.mil -- Downloaded: 2016-11-16T13:24Z
Check the source to verify that this is the current version before use.

ELECTRONIC INDUSTRIES ASSOCIATION (EIA)

EIA RS-359 - EIA Standard Colors For Color Identification and Coding (ANSI C-83 1-1973)
EIA-557 - EIA Standard Implementation of Statistical Process Control (SPC) in Manufacturing Process

(Application for copies should be addressed to the Electronic Industries Association, 2001 Eye Street, N.W., Washington, DC 20006.)

2 2 Non-Government publications The following documents form a part of this document to the extent specified herein Unless otherwise specified, the issues of the documents which are DoD adopted are those listed in the issue of the DODISS cited in the solicitation. Unless otherwise specified, the issues of documents not listed in the DODISS are the issues of the documents cited in the solicitation (see 6 2)

INTERNATIONAL STANDARDS ORGANIZATION

ISO/R 68-1973-ISO-Basic Profile for Triangular Screw Threads, 25 to 5 MM
ISO/R 261-1973-ISO-Metric Screw Threads, General Plan, .25 to 300 MM
ISO/R 262-1973-ISO-Metric Screw Threads for Screws, Bolts, and Nuts, 6 to 39 MM.
ISO/R 965-1973-
Part 1 - ISO General Purpose Metric Screw Threads, Tolerances, Principals and Basic Data
Part 2 - ISO General Purpose Metric Screw Threads, Tolerances, Limits of Sizes for Medium Quality Commercial Bolt and Nut Threads 1 6 to 39 MM
Part 3 - ISO General Purpose Metric Screw Threads, Tolerances and Deviations for Constructional Threads 1 6 to 355 MM.
ANSI Y14 5M - Dimensioning and Tolerancing
ASTM D570-81 - Plastic, Water Absorbtion of
ASTM E595-84 - Materials from Outgassing in a Vacuum Environment, Total Mass Loss and Collected Volatile Condensable, Standard Test Method For

(Application for copies should be addressed to the American National Standard Institute, 1430 Broadway, New York, NY 10018)

2 3 Order of precedence In the event of a conflict between the text of this document and the references cited herein (except for related associated detail specifications, specification sheets, or MS standards), the text of this document takes precedence Nothing in this document, however, supersedes applicable laws and regulations unless a specific exemption has been obtained

3 REQUIREMENTS

3 1 MS sheet form standards and specification sheets. The individual item requirements shall be as specified herein and in accordance with applicable MS sheet form standards, or specification sheets. In the event of conflict between the MS sheet form standards or specification sheets and this specification, the MS sheet form standard or specification sheet shall govern

3 2 Qualification Connectors furnished under this specification shall be products which are qualified for listing on the applicable qualified products list at the time set for opening of bids (see 4 4 and 6 3)

Source: https://assist.dla.mil -- Downloaded: 2016-11-16T13:24Z
Check the source to verify that this is the current version before use.

3 2 1 Reliability The contractors reliability program for assembled connectors and assembly procedures shall meet the requirements of MIL-STD-790 with the exception that the failure reporting period shall be 12 months in lieu of 6 months

3 2 2 Quality

3 2 2 1 Statistical process control (SPC) The contractor shall implement and use statistical process control techniques in the manufacturing process for parts covered by this specification The SPC program shall be developed and maintained in accordance with EIA-557 The SPC program shall be documented and maintained as part of the overall reliability assurance program as specified in MIL-STD-790

3 3 Materials

3 3 1 Metals Metals shall be of a corrosion-resistant type or shall be plated or treated to resist corrosion

3 3 1 1 Dissimilar metals and compatible couples When dissimilar metals are used in intimate contact with each other, protection against galvanic corrosion shall be provided The use of dissimilar metals in contact, which tend toward active galvanic corrosion (particularly brass, copper, or steel used in contact with aluminum or aluminum alloy) is not acceptable. However, metal plating of dissimilar base metals to provide similar or suitable abutting surfaces is permitted The use of dissimilar metals separated by a suitable insulating material is also permitted Dissimilar metals and compatible couples are defined in requirement 16 of MIL-STD-454

3 3 2 Components Materials for specific components of the connector shall be as follows

3 3 2 1 Classes C, E, F, G, P, T, and W

a Shell - Impact extruded or machined aluminum alloy

b Coupling ring, jam-nut, and potting ring - Machined aluminum alloy

c Insert - Reinforced epoxy resin or other suitable rigid dielectric material

d Bayonet pins - Corrosion-resistant steel

e Spring fingers - Heat-treated beryllium copper or corrosion-resistant steel

f Filler compound - RTV silicone in accordance with MIL-A-46146, or equivalent

g Gaskets, grommet, and interface seals - Silicone or fluorosilicone elastomer

3 3 2 2 Classes K and S, environment resisting

a Shell - Corrosion resistant steel

b Coupling ring - Corrosion resistant steel

c Insert - Reinforced epoxy resin or other suitable rigid dielectric

d Spring fingers - Heat-treated beryllium copper or corrosion resistant steel

e Filler compound - RTV silicone in accordance with MIL-A-46146, or equivalent

Source: https://assist.dla.mil -- Downloaded: 2016-11-16T13:24Z
Check the source to verify that this is the current version before use.

f Gasket, grommet, and interfacial seal - Silicone or fluorosilicone elastomer

g Jam-nut - Corrosion resistant steel

3 3 2 3 Classes H, Y, and N, hermetic receptacles

a Shell

(1) Flange, jam-nut and solder mounting - Corrosion-resistant steel.

(2) Flange, jam-nut and solder mounting - Carbon steel (series I and II only)

(3) Flange, weld mounting - Corrosion-resistant steel (type 304)

b Insert

(1) Fused vitreous material for contact style P

(2) Vitreous seal and rigid dielectric for contact style S.

c Contacts - Nickel-iron 52 alloy, or equivalent.

d Bayonet pins - Corrosion-resistant steel

e Gaskets and interface seals - Silicone or fluorosilicone elastomer

f. Jam nut - Jam nut shall be the same material and finish as the applicable connector

3 3 2 4 Classes J and M, composite connectors

a Shell, coupling ring and jam nut - These parts shall be of corrosion resistant, high performance resins with or without filler materials. The resins must be defined by specifications listed in the DODISS or published by professional materials associations, exceptions may be granted by the preparing activity

b Insert - Reinforced epoxy resin or other suitable rigid dielectric material.

c Spring fingers - Heat-treated beryllium copper or corrosion-resistant steel

d Filler compound - RTV silicone in accordance with MIL-A-46146, or equivalent

e Gasket, grommet, and interface seals - Silicone or fluorosilicone elastomer

3 3 3 Fungus resistant Materials used in the construction of these connectors shall be fungus inert in accordance with requirement 4 of MIL-STD-454

3 3 4 Magnetic permeability (except finish D of series I and II) The relative permeability of the wired, assembled, and fully mated connector assembly shall be less than 2 0 when measured in accordance with 4 7 41

Source: https://assist.dla.mil -- Downloaded: 2016-11-16T13:24Z
Check the source to verify that this is the current version before use.

3 4 Design and construction Connectors and accessories shall be designed and constructed to withstand normal handling incident to installation and maintenance in service Connector intermateability control dimensions shall be as specified on figures 1 through 7 Connector accessory interface dimensions shall be as specified on figures 8, 9, and 10 All accessories designed to be used in accordance with MIL-C-38999 connectors must conform to figure 11 Recommended panel cutout dimensions are shown on figure 28 Dimensioning and tolerancing shall be in accordance with ANSI Y14 5M

3 4 1 Contacts Contacts shall be fixed or crimp removable, as specified

3 4 1 1 Indirect shipment of contacts Environment resisting connectors may be ordered without contacts (see 1 3 1e and 6 2)

3 4 1 2 Fixed contacts Contacts in hermetically sealed or thru-bulkhead receptacles shall be nonremovable and solderable or feedthrough Dimensions for solder type contacts shall be as shown on figure 12 Mating ends of style C contacts shall conform to MIL-C-39029/56 and /58

3 4.1 3 Crimp removable contacts. Crimp removable contacts may be used with all environment resisting classes of connectors Crimp contacts shall be qualified to the detailed specification sheets of MIL-C-39029 (see 6 5) The quantity of crimp contacts to be supplied with each connector unit package shall consist of a full complement of contacts plus 1 spare contact for each size used in the arrangement utilizing 26 contacts or less For arrangements utilizing more than 26 contacts, 2 spare contacts of each size used in the arrangement shall be supplied Spare Coax and Twinax contacts are not required

3 4 1 4 Contact arrangement. Contact arrangement shall be in accordance with MIL-STD-1560 Except for hermetic assemblies, the engaging end of the pin contact in assembled connectors shall be located within 024 inch (0 61 mm) diameter of true position and the engaging end of socket contacts in assembled connectors shall be located within 015 inch (0 38 mm) diameter of true position For hermetic connectors engaging end of pin and socket contacts shall be located within 004 inch (0 10 mm) diameter of true position Test voltages for service ratings shall be in accordance with table XIV

3 4 1 5 Installing and removal tools Both the MIL-I-81969/8 and the MIL-I-81969/14 tools shall properly assemble and disassemble the pin and socket contacts into their connector inserts One MIL-I-81969/14 tool for each contact size shall be enclosed in the unit package For indirect shipments, connectors may be ordered without installing and removal tools (see 6 2)

3 4 2 Insert design

3 4 2 1 Environment resisting classes The entire insert and wire sealing or wire supporting member of the environment resisting assemblies shall be essentially one integral part, designed to provide suitable sealing and support (except box mount connectors) around the wires and to be nonremovable The rigid dielectric shall be one molded piece or no more than two pieces bonded so as to form essentially one integral piece The design shall be such as to permit the removal and replacement of individual contacts into their connector inserts with both MIL-I-81969/8 or MIL-I-81969/14 installing/removal tools The contact locking device shall be contained in the rigid dielectric insert and shall so retain the contacts as to meet the contact retention requirements of this specification Inserts shall be secured to prevent rotation All pin contact inserts shall have a resilient interface seal bonded to the front face in accordance with the applicable standards Socket entry holes and pin 'donut rings shall conform to figures 13 and 14 Wire sealing for size 8 cavities may be accomplished by the use of a separate resilient bushing If separate resilient bushings are required, they shall be furnished with the connector

Source: https://assist.dla.mil -- Downloaded: 2016-11-16T13:24Z
Check the source to verify that this is the current version before use.

3 4 2 2 Hermetic receptacles Vitreous material shall be used for fusing to metal to insulate and seal contacts The insert member for style S shall be two-piece construction consisting of a reinforced rigid dielectric socket support member bonded to the face of the vitreous insert and mechanically retained in the shell Socket insert entry holes shall conform to figure 12 All pin contact inserts shall have a resilient interface seal bonded to the front face of the vitreous insert in accordance with the applicable standards. Pin 'donut' rings shall conform to figures 13 and 14.

3 4 3 Sealing

3 4.3.1 Wire sealing (except box mount connectors). Environment resisting assemblies shall be designed to meet the environmental requirements of this specification using wire of outer diameter within the applicable range as shown in table I

TABLE I Wire sizes and diameters

Contact size	Wire size (AWG)	Finished wire outside dimensions			
		Minimum		Maximum	
		Inches	mm	Inches	mm
22D	28, 26, 24, 22	030	0 76	054	1.37
22M 1/	28, 26, 24	.030	0 76	.050	1.27
22 1/	26, 24, 22	034	0 86	060	1 52
20	24, 22, 20	.040	1 02	083	2.11
16	20, 18, 16	065	1.65	.109	2.77
12	14, 12	097	2 46	142	3.61
10	10	135	3 42	162	4.12
8 coax	M17/95-RG-180 2/	135	3 43	155	3.94
8 twinax	M17/176-00002 3/	124	3 15	134	3 40

1/ Inactive for new design
2/ MIL-C-17
3/ The applicable insert arrangements are 19-18, 21-75, 25-75

Connectors shall meet the requirements specified when

a A full complement of wire of the applicable minimum or maximum insulation diameter is installed
b Any combination of wire diameters within the extremes of (a), above are used

3 4 3 2 Grommet sealing plugs Except for box mount connectors and as otherwise specified (see 3 1), the grommets of environment resisting connectors shall be designed to accept sealing plugs in accordance with MS27488 in lieu of wire where unwired contacts are employed Ten percent of the number of contacts, but not less than one sealing plug, shall be enclosed in the unit package For indirect shipments, connectors may be ordered without grommet sealing plugs (see 6.2) The following connectors are not designated to accept sealing plugs and sealing plugs shall not be provided in the unit packages for these containers MS27496, MS27499, MS27505, MS27508, all class P connectors, hermetic connectors, and thru-bulkhead connectors

Source: https://assist.dla.mil -- Downloaded: 2016-11-16T13:24Z
Check the source to verify that this is the current version before use.

3 4 3 3 Mating seal Plugs and receptacles with pin inserts shall have a resilient face with individual pin barriers (see figures 13 and 14) The pin barrier projections shall seal in their respective lead-in chambers of the hard face socket insert The resilient interfacial seal shall provide individual contact seals in the mated condition to ensure circuit isolation between each contact and contact to shell The receptacles of series I, II, and III shall be provided with a peripheral seal The plugs of series IV shall incorporate an O-ring peripheral seal

3 4 4 Shell Shells, including mounting flanges, shall be of one-piece construction and shall be designed to retain their inserts in one position, both axially and with respect to rotation, by mechanical means Adhesive may be used as a supplementary retention means for environment resisting connectors Each plug and receptacle connector shall have at least one blue color band in accordance with EIA RS-359, indicating a rear release contact retention system The blue color band shall be located so that it is readily visible to any person servicing a mounted connector

3 4 4 1 Spring fingers except class C or finish C. All series I and III plugs shall have spring fingers All series II and IV plugs noted "EMI grounding" (see 3 1) shall have spring fingers Spring fingers shall be designed to make electrical contact with the mating shell without interfering with proper engagement The springs shall be retained about the shell periphery Minimum engagement of spring fingers shall be 040 (1.02 mm) prior to contact engagement for series I, III, and IV, and shall be after contact engagement for series II

3 4 4 2 Jam-nut mounting receptacles Jam-nut mounting receptacles shall be provided with a mounting nut MS3186 for series I and II, and DOD-C-38999/28 for series III and IV, all with provisions for locking, and an O-ring MS9068

3 4 5 Screw threads Screw threads shall conform to FED-STD-H28, MIL-S-7742, MIL-STD-1373, ISO/R68-1973, ISO/R261-1973, ISO/R262-1973, and ISO/R965-1973, as applicable. MIL-STD-1373 should be used as a reference for gauge design on triple start threads Threads shall be checked using ring or plug gauges. Slight out-of-roundness beyond the specified tolerances is acceptable if threads can accept the gauges without forcing

3 4 6 Coupling Connectors shall be coupled to counterpart connectors by means of a bayonet mechanism for series I and II, a triple start thread mechanism for series III and a breech mechanism for series IV The mechanism shall include a means of maintaining the mated connector in full engagement. The coupling ring shall be knurled or fluted to facilitate coupling and shall be captivated The coupling nuts of all connectors shall have a blue color band in accordance with EIA RS-359, indicating a rear release contact retention system. Coupling pins of series I and II connectors and accessories shall be permanently attached The end surfaces of all coupling pins shall be of contrasting color to the shell finish

3 4 6 1 Ease of coupling Counterpart connectors of any arrangement shall be capable of being fully coupled and uncoupled in a normal and accessible location without the use of tools

3 4 6 2 Locking

3 4 6 2 1 Series I and II For series I and II, a detent shall be provided in the coupling mechanism so that an audible click is evident when proper coupling is accomplished Provision shall be made for visual determination that proper coupling has been achieved

Source: https://assist.dla.mil -- Downloaded: 2016-11-16T13:24Z
Check the source to verify that this is the current version before use.

3 4 6 2 2 Series III For series III, complete coupling shall be accomplished by approximately 360° clockwise rotation of the coupling nut and shall provide shell-to-shell bottoming An anti-decoupling device shall be provided to maintain complete coupling A red band shall be located on the receptacle so as to be visible when unmated and fully covered when completely mated.

3 4 6 2 3 Series IV Complete coupling shall be accomplished by approximately 90° clockwise rotation of the coupling ring The coupling ring shall incorporate a positive detent action at both the ready-to-mate and the mated positions providing both an audible and tactile indication of complete mating. A red band shall be located on the plug so as to be fully visible when coupling ring is in the ready-to-mate position, and fully covered when the coupling ring is in the completely mated position Coverage of the red band during mating without the action of the audible and tactile indicators constitutes an unmated connector

3 4 6 3 Polarization of connector shells Polarization of connector shells shall be accomplished by means of integral keys and suitable matching keyways on the counterpart Polarization shall be accomplished before initial engagement of the coupling ring During axial engagement, pins shall not touch sockets or the insert face until polarization has been achieved

3 4 6.3.1 Alternates. Shells shall also be supplied with the keys (or keyways) rotated from the normal as indicated on figures 5, 6, and 7

3 4 6 4 Lubrication. Bayonet coupling ramps, spring washers, the breech mechanism on series IV, and the coupling threads of series III plug connectors may be coated with a suitable lubricant Rear accessory threads of all connectors and receptacle coupling areas shall not be lubricated

3 4 6 5 Pin-to-pin mating prevention (series I, III, and IV)

3 4 6 5 1 Series I and III Series I and III connectors shall be designed such that pin-to-pin contact (electrical or physical) is not possible in the event that a plug with pin contacts is inadvertently mated with a receptacle with pin contacts

3 4 6 5 2 Series IV Series IV connectors shall be provided with key and keyway widths arranged so as to prevent a plug with pin contacts from being mated with a receptacle with pin contacts

3 4 7 Cavity fill (environment resisting classes) If the rear grommet design does not allow for intimate contact between it and the complete inner perimeter of the shell, any resulting cavity between the insert and the shell shall be filled with RTV silicone conforming to MIL-A-46146, or equivalent

3 4 8 Plating

3 4 8 1 Contacts (hermetic receptacles) Contacts shall be gold-plated to a minimum thickness of 000050 inch (0 00127 mm) in accordance with MIL-G-45204 over a suitable underplate Silver underplate shall not be used Wire marks on the back of the contact around the "nonfunctional" outside diameter of the wire well caused by electrical contact for plating are permissible.

3 4 8 1 1 Contacts (crimp) The plating and plating thickness on crimp contacts shall be as specified in MIL-C-39029

Source: https://assist.dla.mil -- Downloaded: 2016-11-16T13:24Z
Check the source to verify that this is the current version before use.

3 4 8 2 Shells and accessory hardware. Unless otherwise specified, the finish on shells and accessory hardware shall be in accordance with the following designations

Series I and II Finishes -

A - Nickel plate a minimum of 0002 inch (0 005 mm) followed by cadmium plate 0001 inch (0 003 mm) minimum in accordance with QQ-P-416, type II A preliminary plate of other metal is permissible. The final finish shall be electrically conductive and shall be silver to light iridescent yellow in color. Finish A is inactive for new design

B - Olive drab cadmium plate in accordance with QQ-P-416 over a suitable underplate to withstand 500 hours salt spray test Final finish shall be electrically conductive

C - Hard, anodic, nonconductive in accordance with MIL-A-8625, type III, 0008 inch (0 020 mm) minimum thickness.

D - Fused tin plate in accordance with MIL-T-10727, type I. The tin shall be reflowed to promote solderability

E - Electrically conductive, stainless steel, passivated

F - Electrically conductive, electroless nickel plating conforming to MIL-C-26074, class 3 for molded/extruded alloys and class 4 for heat treated alloys, grade B, finish shall withstand 48 hours salt spray test Use of a suitable under plate is permissible

N - Electrodeposited nickel in accordance with QQ-N-290, class 2, .0001 to 0002 inch (0 003 to 0 005 mm) thickness

Series III and IV Classes -

W - Olive drab cadmium plate in accordance with QQ-P-416 over a suitable underplate to withstand 500 hours salt spray test Final finish shall be electrically conductive

N,S - Electrodeposited nickel in accordance with QQ-N-290, class 2, 0001 to 0002 inch (0 003 to 0 005 mm) thickness

G,F - Electrically conductive electroless nickel plating conforming to MIL-C-26074, class 3 for molded/extruded alloys and class 4 for heat treated alloys, grade B, finish shall withstand 48 hours salt spray test Use of a suitable underplate is permissible

J - Olive drab cadmium plate in accordance with QQ-P-416 over a suitable underplate to withstand 2000 hours salt spray test Final finish shall be electrically conductive

M - Electrically conductive electroless nickel plating Finish shall withstand 2000 hours salt spray test Use of a suitable underplate is permissible

C - Hard, anodic nonconductive in accordance with MIL-A-8625, type III 0008 inch (0 020 mm) minimum thickness

H,K,Y - Electrically conductive, corrosion resistant steel passivated

Source: https://assist.dla.mil -- Downloaded: 2016-11-16T13:24Z
Check the source to verify that this is the current version before use.

3 4 8 2 1 Shell spring fingers Shell spring fingers shall be suitably protected to prevent corrosion

3 4 8 2 2 Coupling Ring (classes J and M) The coupling ring of classes J and M may be unplated

3 5 Interchangeability All connectors having the same part number shall be completely interchangeable with each other with respect to installation and performance

3 6 Maintenance aging (except hermetics) When tested as specified in 4 7 2, the contact installing and removal forces shall not exceed the requirements of table II

TABLE II Installing and removal forces

Contact size	Installing and removal forces (maximum)	
	Pounds	Newtons
22D	10	44
22M 1/	10	44
22 1/	10	44
20	20	89
16	20	89
12	30	133
10	35	156
8 Triax	35	156

1/ Inactive for new design

3.7 Thermal shock (hermetics only). When tested as specified in 4 7.3, there shall be no damage detrimental to the operation of the connector

3 8 Temperature cycling (all classes except hermetics) When tested as specified in 4 7 4, there shall be no blistering, peeling or separation of plating or other damage detrimental to the operation of the connector

3 9 Air leakage (hermetics only) When tested as specified in 4 7 5, there shall be no evidence of leakage in excess of 01 micron ft 3/h (1E-7 cm 3/s)

3 10 Coupling torque When tested as specified in 4 7 6, the coupling torque for mating and unmating of the counterpart connectors and protective covers shall meet the requirements of table III For series IV connectors with spring fingers, the axial mating force prior to the coupling torque during engagement and following the torque upon disengagement shall be as specified in table VI.

Source: https://assist.dla.mil -- Downloaded: 2016-11-16T13:24Z
Check the source to verify that this is the current version before use.

TABLE III Coupling torque.

Shell size	Maximum engagement and disengagement		Minimum disengagement	
	Pound inch	Newton meters	Pound inch	Newton meters
8	8	0 9	2	0 2
9	8	0.9	2	0 2
10	12	1 4	2	0.2
11	12	1.4	2	0 2
12	16	1 8	2	0.2
13	16	1.8	2	0 2
14	20	2 3	4	0 4
15	20	2 3	3	0 3
16	24	2.7	4	0 4
17	24	2 7	3	0 3
18	28	3 2	5	0.6
19	28	3 2	3	0 3
20	32	3 6	6	0 7
21	32	3 6	5	0 6
22	36	4 1	7	0 8
23	36	4 1	5	0 6
24	36	4 1	7	0 8
25	40	4 6	5	0 6

3 11 Durability When tested as specified in 4 7 7, the connectors shall show no defects detrimental to the operation of the connectors and shall meet the subsequent test requirements (see 4 4 3)

3.12 Altitude immersion (qualification only) (except hermetics) When tested as specified in 4 7 8, the mated connector pair shall have a minimum insulation resistance as specified in 3 13 1 and dielectric withstanding voltage as specified in 3 14

3 13 Insulation resistance

3 13 1 Insulation resistance at ambient temperature When tested as specified in 4 7.9.1, the insulation resistance between any pair of contacts and between any contact and the shell shall be greater than 5,000 megohms Insulation resistance after altitude immersion shall be 1,000 megohms minimum Insulation resistance after humidity shall be 100 megohms minimum

3 13.2 Insulation resistance at elevated temperature. When tested as specified in 4 7 9 2, the insulation resistance between any pair of contacts and between any contact and the shell shall be greater than 1,000 megohms for environment resisting class connectors Hermetic connectors shall be greater than 200 megohms

3 14 Dielectric withstanding voltage When tested as specified in 4 7 10 1 or 4 7 10 2 the maximum leakage current shall be 2 milliamperes, and there shall be no evidence of electric breakdown or flashover

3 15 Insert retention When tested as specified in 4 7 11, unmated connectors shall retain their inserts in their proper location in the shell and there shall be no evidence of cracking, breaking, separation from the shell, or loosening of parts

Source: https://assist.dla.mil -- Downloaded: 2016-11-16T13:24Z
Check the source to verify that this is the current version before use.

3 16 Salt spray (corrosion). When tested in 4.7 12, unmated connectors shall show no exposure of basis material due to corrosion which will adversely affect performance Class J (initial qualification) after 500 hours salt spray inspect connector for cadmium, (inspection method optional) no underplate or basis material shall be exposed. Return to chamber for completion of 2000 hours

3 17 Contact resistance (hermetics only) When tested as specified in 4.7 13, contacts in the mated condition shall meet the contact resistance requirements of table IV Lead resistance may be included in the measurement These values are for qualification only

TABLE IV Contact resistance

Class	Contact size	Wire size	Test amperes	Millivolt drop maximum	
				Initial	After corrosion or temperature durability
H, N and Y	12	12	17	85	100
	16	16	10	85	100
	20	20	5	60	75
	22D	22	3	85	95

3 18 Electrical engagement When tested as specified in 4 7 14, wired, mated connectors shall provide a minimum of 034 inch (0 86 mm) electrical engagement for series I and II, and 050 inch (1 27 mm) for series III and IV

3 19 External bending moment. When tested as specified in 4 7.15, connectors shall show no evidence of damage detrimental to their normal operation nor shall there be any interruption of electrical continuity.

3 20 Coupling pin strength (series I and II only) When tested as specified in 4 7 16, bayonet coupling pins shall withstand a load of 50 +5, -0 pounds without displacement or perceptible loosening of coupling pins

3 21 Gauge location Using test gauges conforming to figures 15, 16, 19, and 20, the axial location of contacts shall be measured as specified in 4.7 17. Gauge location measurements shall fall within the range specified on figures 1, 2, 3, and 4

3 22 Gauge retention When tested as specified in 4 7 18, the test gauges conforming to figures 15, 17, and 18 shall be retained in the contact cavities of crimp contact connectors and the axial displacement of the test gauges while under load shall not exceed 012 inch (0 30 mm)

3 23 Contact retention When tested as specified in 4 7 19, the axial displacement of the contact shall not exceed 012 inch (0 30 mm) No damage to contacts or inserts shall result

3 24 Altitude-low temperature. When tested as specified in 4 7.20, the connectors shall meet the requirements of dielectric withstanding voltage at sea level specified in 3 14 and insulation resistance at ambient temperature specified in 3 13 1

3 25 Accessory thread strength When tested as specified in 4 7 21, the accessory threads and portion of the connector that accepts cable clamps and "J" adapters shall be capable of withstanding the torque listed in table V

Source: https://assist.dla.mil -- Downloaded: 2016-11-16T13:24Z
Check the source to verify that this is the current version before use.

TABLE V Accessory thread strength 1/

Shell size	Accessory thread torque			Shell size	Accessory thread torque		
	Series II	Series I	Series III and IV		Series II	Series I	Series III and IV
	Inch-pounds	Inch-pounds	Newton-meters		Inch-pounds	Inch-pounds	Newton-meters
8	50 ±5			17		200 ±20	22 6 ±2 3
9		100 ±10	11 3 ±1 1	18	50 ±5		
10	50 ±5			19		200 ±20	22 6 ±2 3
11		100 ±10	11 3 ±1 1	20	100 ±10		
12	50 ±5			21		250 ±25	28 3 ±2 8
13		150 ±15	17 0 ±1 7	22	100 ±10		
14	50 ±5			23		250 ±25	28 3 ±2 8
15		150 ±15	17 0 ±1 7	24	100 ±10		
16	50 ±5			25		250 ±25	28 3 ±2 8

1/ These values are for qualification testing only

3 26 Vibration (qualification only) When tested as specified in 4 7 22, there shall be no electrical discontinuity and there shall be no disengagement of the mated connectors, backing off of the coupling mechanism, evidence of cracking, breaking, or loosening of parts

3 27 Shock When tested as specified in 4 7 23, there shall be no electrical discontinuity and there shall be no disengagement of the mated connectors, evidence of cracking, breaking, or loosening of parts

3 28 Shell-to-shell conductivity (except finish C and class C) When tested as specified in 4 7 24 the probes shall not puncture or otherwise damage the connector finish and the maximum measured potential drop across assemblies shall be as follows

a Series I and II with spring fingers

(1) Finishes A and B - 2 5 millivolts

(2) Stainless steel or a connector having half of the mating part stainless steel - 50 millivolts

(3) Finishes F and N - 1 millivolt

b Series II and IV without spring fingers - 200 millivolts

Source: https://assist.dla.mil -- Downloaded: 2016-11-16T13:24Z
Check the source to verify that this is the current version before use.

c Series III and IV with spring fingers
(1) Class W - 2 5 millivolts

(2) Classes F, G, N, and S - 1 millivolt

(3) Class H, K, or Y or a connector having half of the mating part class H, K, or Y - 10 millivolts

(4) Classes J and M - 3 0 millivolts initial, 6 0 millivolts after conditioning

After conditioning (salt spray and coupling torque) the above values may increase 100 percent

3 29 Humidity When tested as specified in 4 7 25, wired, mated connectors shall show no deterioration which will adversely affect performance of the connector Following the test, and during the final cycle, insulation resistance shall be 100 megohms or greater

3 30 Shell spring finger forces When tested as specified in 4 7 26, the forces necessary to engage and separate EMI plugs with receptacle shells shall be within the values specified in table VI

TABLE VI Shell spring finger forces

Shell size	Axial force							
	Series I II, and III				Series IV			
	Maximum		Minimum		Maximum		Minimum	
	Pounds	Newtons	Pounds	Newtons	Pounds	Newtons	Pounds	Newtons
8/9	25	111	0 5	2	-	-	-	-
10/11	25	111	0 5	2	5	22 3	0 3	1 3
12/13	30	133	0 5	2	5	22 3	0 3	1 3
14/15	30	133	0 5	2	6	26 7	0 4	1 8
16/17	35	156	0 5	2	7	31 1	0 4	1 8
18/19	35	156	0 5	2	8	35 6	0 5	2 2
20/21	35	156	0 5	2	9	40 0	0 5	2 2
22/23	35	156	0 5	2	10	44 5	0 5	2 2
24/25	35	156	0 5	2	10	44 5	0 5	2 2

3 31 EMI shielding (except finish C and class C) When tested as specified in 4 7 27, the EMI shielding capabilities of mated shells with spring fingers shall not be less than that specified in table VII at the specified frequencies

3 32 Ozone exposure When tested as specified in 4 7 28, the connectors shall show no evidence of cracking of dielectric material or other damage due to ozone exposure that will adversely affect performance

3 33 Fluid immersion When tested as specified in 4 7 29, connectors shall meet the requirements for coupling torque (see 3 10) and dielectric withstanding voltage (see 3 14)

3 33 1 Retention system fluid immersion When tested as specified in 4 7 29 1, the insert assemblies shall meet requirements of contact retention (see 3 23) Effects of the fluids on resilient sealing members shall not be a consideration of this test

Source: https://assist.dla.mil -- Downloaded: 2016-11-16T13:24Z
Check the source to verify that this is the current version before use.

TABLE VII EMI shielding effectiveness

Frequency MHz	Leakage attenuation (dB) minimum				
	Series II	Series III and IV			Series I
	Finishes B and F	Classes H, K, and Y	Classes F, G, N, M, and S	Classes W and J	Finishes B and F
100	65	80	90	90	90
200	60	75	88	88	88
300	55	73	88	88	88
400	55	71	87	87	87
800	45	66	85	85	85
1,000	45	65	85	85	85
1,500	---	59	76	69	69
2,000	---	55	70	65	65
3,000	---	52	69	61	61
4,000	---	50	68	58	58
6,000	---	48	66	55	55
10,000	---	45	65	50	50

3 34 Pin contact stability When tested as specified in 4 7 30, the total displacement of a reference point on the contact tip end shall not exceed the amount shown in table VIII

TABLE VIII Pin contact stability

Contact size	Total displacement		Force	
	Inch	mm	Pounds	Newtons
22 1/, 22D, and 22M 1/	.030	0 76	0 28	1.2
20	054	1 37	0 55	2 4
16	075	1 91	1.10	4.9
12	075	1 91	1 10	4 9
10	1	2 54	2 18	9.7
8 Triax	1	2 54	2 18	9 7

1/ Inactive for new design

3 35 Contact walkout When tested as specified in 4 7 31, contacts shall not become dislodged from their normal position

3 36 Installing/removal tool abuse (qualification only) When tested as specified in 4 7 32, there shall be no evidence of damage to the contacts, the connector insert, or the contact retaining mechanism

3 37 High temperature exposure

3 37 1 High temperature exposure with contact loading When tested as specified in 4.7 33 1, the contacts shall maintain their specified locations as shown on figures 1, 2, 3, and 4 and there shall be no electrical discontinuity.

3 37 2 High temperature exposure (series III, except hermetics) When tested as specified in 4 7 33 2 for 1,000 hours, connectors shall perform satisfactorily and pass succeeding tests in the qualification test sequence

Source: https://assist.dla.mil -- Downloaded: 2016-11-16T13:24Z
Check the source to verify that this is the current version before use.

3.38 Electrolytic erosion (series III and IV) When tested as specified in 4 7 34, pin contacts shall show no exposure of base metal due to electrolytic erosion. Corrosion deposits shall not be considered as defects

3 39 Firewall (classes K and S connectors) Mated connectors shall prevent passing of a flame through the connector for at least 20 minutes when tested in accordance with 4 7.35 During this period there shall be no flame from outgassing or other causes on the end of the connector protected by the firewall The current specified in 4 7 35 shall be applied for the first 5 minutes without break in electrical continuity. During the next minute the connector shall draw no more than 2 amperes when a test potential of 100 to 125 V ac at 60 Hz is applied between adjacent contacts and between contacts and the shell

3.40 Contact plating thickness (hermetic). When tested as specified in 4.7.36, contacts used in hermetic connectors shall be gold plated to a minimum thickness of 000050 inch (0 00127 mm).

3 41 Contact engagement and separating force (hermetic sockets only). When tested as specified in 4.7.37, contact engagement and separating forces shall be within the limits specified in MIL-C-39029.

3.42 Resistance to probe damage (hermetic sockets only). When tested as specified in 4.7 38, contacts shall withstand the bending moment and depth of test probe insertion without evidence of damage that would interfere with the mechanical or electrical performance.

3 43 Marking Connectors and accessories shall be permanently marked with the manufacturer's name or trademark, date code, and the following information, as applicable Stamping shall be in accordance with MIL-STD-1285 where space permits Metal stamping shall be accomplished before plating. The following examples are illustrative

a Identification (series I and II)

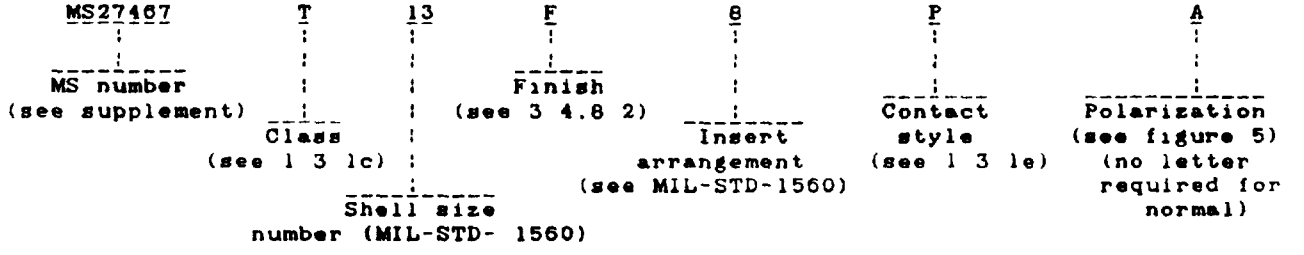

b Identification (series III and IV).

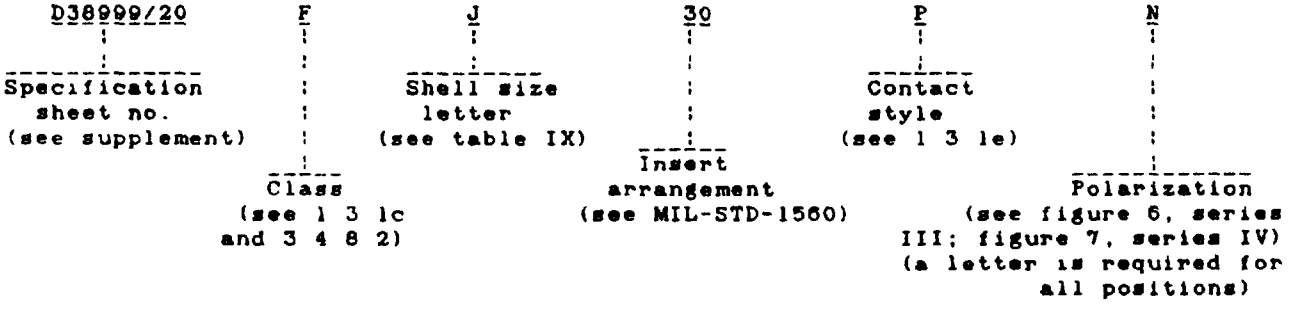

c Lot number - (000010)

d JAN prefix - (see 3 43 2)

Source: https://assist.dla.mil -- Downloaded: 2016-11-16T13:24Z
Check the source to verify that this is the current version before use.

3 43.1 Contact location identification. Contact locations shall be identified as indicated on the applicable military standard All positions shall be identified on the front and rear faces of the insert except where space limitations make this impracticable Location of contact identifying characters shall be in close proximity to the holes but need not be placed exactly where indicated on the standard The preferred color of the contact identifying character is white. When the background is a color against which white is difficult to distinguish, a color will be chosen for which the identifying character can be easily distinguished

3 43 2 JAN brand. The United States Government has adopted, and is exercising legitimate control over the certification marks "JAN" and "J", respectively, to indicate that items so marked or identified are manufactured to, and meet all the requirements of military specification Accordingly, items acquired to, and meeting all of the criteria specified herein and in applicable specifications shall bear the certification mark "JAN" except that items too small to bear the certification mark "JAN" shall bear the letter "J". The "JAN" or "J" shall be placed immediately before the part number except that if such location would place a hardship on the manufacturer in connection with such marking, the "JAN" or "J" may be located on the first line above or below the part number Items furnished under contracts or orders which either permit or require deviation from the conditions or requirements specified herein or in applicable specifications shall not bear "JAN" or "J" In the event an item fails to meet the requirements of this specification and the applicable specification sheets or associated detail specifications, the manufacturer shall remove the "JAN" or the "J" from the sample tested and also from all items represented by the sample. The "JAN" or "J" certification mark shall not be used on products acquired to contractor drawings or specification The United States Government has obtained Certificate of Registration No 504,860 for the certification mark "JAN"

TABLE IX Shell size code for series III and IV part numbering

Shell size	Code letter	Shell size	Code letter	Shell size	Code letter
9	A	15	D	21	G
11	B	17	E	23	H
13	C	19	F	25	J

3 44 Workmanship The connector shall be fabricated in a manner such that the criteria for appearance, fit and adherence to specified tolerances are observed. Particular attention shall be given to neatness and thoroughness of marking parts, plating, welding, soldering, riveting, staking, and bonding The visual examination under 3x magnification shall include examination of each retention cavity for molding discrepancies, retention features, and excessive adhesive The connectors shall be free from crazing, cracks, voids, pimples, chips, blisters, pinholes, sharp cutting edges, burrs, and other defects that will adversely affect life, serviceability, or appearance

3 45 Ice resistance series I, III and IV When tested as specified in 4.7 39, connectors shall pass succeeding tests in the qualification table When tested in accordance with 4 7 6 uncoupling and recoupling torque shall not exceed the values listed in table III by more than 25 percent

3 46 Dust (fine sand) series I, III, and IV When tested as specified in 4 7 40, connectors shall pass succeeding tests in the qualification table When tested in accordance with 4 7 6 uncoupling and recoupling torque shall not exceed the values listed in table III by more than 25 percent

Source: https://assist.dla.mil -- Downloaded: 2016-11-16T13:24Z
Check the source to verify that this is the current version before use.

3 47 Thermal vacuum outgassing (classes G and H qualification only). All materials used in the finished connector shall not release greater than 1 0 percent total mass loss (TML) or 0 1 percent collected volatile condensable material (CVCM) when tested as specified in 4 7 43 Data listed in NASA Reference Publication 1124 Revised may be used in lieu of actual test data for applicable materials

3 48 Hydrolytic stability (classes J and M) When tested as specified in 4 7 44, the connector shall be without defects detrimental to mechanical performance There shall be no increase in the connector weight greater than 0.75 percent When subjected to an overtorque at 150 percent of those values specified in table III, there shall be no evidence of cracking, breaking, or loosening of parts

3 49 Insert grommet bonding Specimens of the insert grommet bonded assembly and the insert interfacial seal bonded assembly shall be subjected to the test specified in 4 7 45 There shall be evidence of cohesive failure of the insert face seal grommet or insert material rather than complete adhesive failure of bond The test shall be conducted using only the complete insert assemblies in their final form prior to assembly into the connector shell

3 50 Impact (classes J and M) When connectors plugs with MIL-C-85049 straight strain relief clamps are tested as specified in 4.7.46, there shall be no breaking or cracking of inserts or shells Also, there shall be no bending of contacts nor any damage which would prevent the connector from mating or unmating

4 QUALITY ASSURANCE PROVISIONS

4 1 Responsibility for inspection Unless otherwise specified in the contract or purchase order, the contractor is responsible for the performance of all inspection requirements as specified herein. Except as otherwise specified in the contract or purchase order, the contractor may use his own or any other facilities suitable for the performance of the inspection requirements specified herein, unless disapproved by the Government The Government reserves the right to perform any of the inspections set forth in the specification where such inspections are deemed necessary to assure supplies and services conform to prescribed requirements

4 1 1 Responsibility for compliance All items shall meet all requirements of sections 3 and 5 The inspection set forth in this specification shall become a part of the contractor's overall inspection system or quality program The absence of any inspection requirements in the specification shall not relieve the contractor of the responsibility of ensuring that all products or supplies submitted to the Government for acceptance comply with all requirements of the contract Sampling inspection, as part of manufacturing operations, is an acceptable practice to ascertain conformance to requirements, however, this does not authorize submission of known defective material, either indicated or actual, nor does it commit the Government to accept defective material

4 1 2 Test equipment and inspection facilities Test and measuring equipment and inspection facilities of sufficient accuracy, quality and quantity to permit performance of the required inspection shall be established and maintained by the contractor The establishment and maintenance of a calibration system to control the accuracy of the measuring and test equipment shall be in accordance with MIL-STD-45662

4 1 3 Reliability assurance program A reliability assurance program shall be established and maintained in accordance with MIL-STD-790 Evidence of such compliance shall be verified by the qualifying activity of this specification as a prerequisite for qualification and continued qualification

Source: https://assist.dla.mil -- Downloaded: 2016-11-16T13:24Z
Check the source to verify that this is the current version before use.

4 1 3 1 Statistical process control (SPC) A SPC program shall be established and maintained in accordance with EIA-557 Evidence of such compliance shall be verified by the qualifying activity as a prerequisite for qualification and retention of qualification

4 1 5 Fungus resistance certification Certification of requirement 4 of MIL-STD-454 is required (see 3 3 3)

4 2 Classification of inspection The examination and testing of connectors shall be classified as follows

a Qualification inspection (see 4 4)

b Quality conformance inspection (see 4 5)

4 3 Inspection conditions Unless otherwise specified herein, all inspections shall be performed in accordance with the test conditions specified in the "GENERAL REQUIREMENTS" of MIL-STD-1344

4 4 Qualification inspection Qualification inspection shall be performed at a laboratory acceptable to the Government (see 6.3) on sample units produced with equipment and procedures normally used in production. Qualification approval may be granted upon successful completion of the inspections and tests of 4 4 3 conducted on samples of 4 4 1, such approval to include classes, finishes, shell configurations, and insert arrangements other than those actually tested providing that the capability to manufacture these parts is demonstrated by providing exhibit samples Qualification of class K connectors also qualifies class S connectors providing class S connectors satisfactorily pass salt spray and group 4 tests Qualification of class T, W, F, or K will qualify connectors for class Y for groups 5 and 11 Qualification of class T connectors also qualifies classes P and E connectors

4 4 1 Sample size The following test samples, for each series manufactured by normal production methods, shall be provided Tested and untested connectors, accessories and materials may be required at no cost to the Government for qualification verification by the responsible qualification activity (see 6 3)

a Two mating pairs of series I, II, III, and IV straight plugs and wall mounting receptacle of each of the nine shell sizes Three shell sizes shall be service M, three shall be service I, and three shall be service II Each arrangement in a given shell size shall be the densest contact arrangement for that particular service rating Half the samples of each shell size shall have pin contacts in the receptacle and socket contacts in the plug The other samples shall have socket contacts in the receptacle and pin contacts in the plug All samples shall be provided with in accordance with MIL-C-85049 straight strain relief clamps

b Two mating pairs, hermetic jam-nut receptacle and straight plug, of each of the nine shell sizes Three shell sizes shall be service M, three shall be service I, and three shall be service II Each arrangement in a given shell size shall be the densest contact arrangement for that particular service rating One sample of each shell size shall have pin contacts in the receptacle and socket contacts in the plug The other sample shall have socket contacts in the receptacle and pin contacts in the plug Contractors seeking qualification of one style only in hermetics shall provide both jam-nut receptacles in that style with mating counterparts

c One straight plug with spring fingers and counterpart wall mounting receptacle of small, medium, and large shell sizes with applicable EMI backshells

Source: https://assist.dla.mil -- Downloaded: 2016-11-16T13:24Z
Check the source to verify that this is the current version before use.

d One wall mounting receptacle with applicable conductive finish in small, medium, and large shell sizes, less coupling pins and inserts. These connectors must intermate with samples provided under 4.4 1c

e Twelve mating pairs, straight plugs and wall mounting receptacles, of a medium shell size, in any representative insert and shell size arrangement

f Twelve straight plugs and wall mounting receptacles of various representative shell sizes and insert arrangements.

g Sufficient, mating connectors, plugs, and wall mounting receptacles, in representative shell sizes, to provide a minimum of 21 contact cavities of each applicable contact size

h Sufficient hermetic receptacles to provide the following quantities of pin contacts

Size	Quantity
22D	65
20,16	50
12	35

i For each shell size one mating pair of series II and one mating pair of series I, III, and IV, will be supplied with environmental backshells in accordance with MIL-C-85049 category 2B for each shell size Connectors shall be supplied in maximum density contact arrangements with pin contacts in the receptacles

j One mating pair classes K and S receptacle and classes K and S straight plug of each of the nine shell sizes Three shell sizes shall be service M, three shall be service I, and three shall be service II. Each arrangement in a given shell size shall be the densest contact arrangement for that particular service rating All samples shall be provided with applicable MIL-C-85049 straight strain relief clamps.

k One mating pair of series I, III, and IV straight plug and receptacle of each of the nine shell sizes Each arrangement in a given shell size shall be the densest contact arrangement for that particular service rating

m Two bonded insert grommet assemblies and two bonded insert interface seal assemblies which have not been assembled into the connector shell shall be tested The assemblies shall be of the size and contact arrangement for which qualification is to be conducted

See ASTM E 595-84 for sample size for thermal vacuum outgassing test

4 4 1 1 Sample size (limited qualification) Manufacturers that do not intend to qualify all nine shell sizes in all series or all contact sizes shall provide the following test samples instead of those specified in 4 4 1a and 4 4 1b Four mating pairs of each shell in each series or contact size to be qualified The maximum number of connectors that will be tested is 36 Future qualification of additional shell or contact sizes will require qualification as determined by the qualifying activity

Source: https://assist.dla.mil -- Downloaded: 2016-11-16T13:24Z
Check the source to verify that this is the current version before use.

4 4 2 Preparation of samples. Except as otherwise specified for shielded contacts, wiring of crimp-type contacts shall be accomplished using tools conforming to MIL-C-22520, class I The length of stripped portion of conductor shall be at least long enough to reach the bottom of the crimp barrel, but shall not be so long that more than 031 inch (0 79 mm) of conductor is exposed at end of barrel when conductor end touches bottom of barrel

a Samples provided under 4 4 1a shall be wired with wire having a smooth extruded outer jacket of waterproof construction One sample of each shell size for series II, and two samples of each shell size for series I, III, and IV, shall have wires listed for maximum diameter and the other samples shall have wires as listed for minimum diameter in table X Two cavities of each sample provided shall contain unwired contacts and sealing plugs in accordance with MS27488 Connectors with less than four contacts of a given contact size will not have sealing plugs installed for that contact size

TABLE X Test wire sizes 1/

Contact size	Maximum diameter	Minimum diameter
22 2/, 22D, and 22M 2/	M22759/9 or /20 -24 M22759/10 or /21 -24	M22759/18, /19, /32, /33 -26 M22759/44, /45, /46 -26
20	M22759/7 -20 M22759/8 -20	M22759/18, /19, /32, /33 -22 M22759/44, /45, /46 -22 M22759/11, /12, /13, /14 -24 M22759/22, /23
16	M22759/3, /4, /7, or /8 -16	M22759/18, /19, /32, M22759/44, /45 -16
12	M22759/7 -12 M22759/8 -12	M81381/7 or /8 -12 M81381/11 or /12
10	M22759/7 -10 M22759/8 -10	M22759/11 -10
8 coax	MIL-C-17/95-RG180	MIL-C-17/95-RG-180
8 twinax	MIL-C-17/176-00002	MIL-C-17/176-00002

1/ High-strength wire is recommended for use on vibration samples
2/ Inactive for new design

b Samples provided under 4 4 1b shall be wired with wire conforming to MIL-W-22759/9 or MIL-W-81381/7 of nominal gauge and potted in accordance with requirement 47 of MIL-STD-454 at any convenient stage in the sequence prior to vibration

c Samples provided under 4 4 1e and 4 4 1k shall be wired with wire conforming to MIL-W-22759/9 or MIL-W-81381/7 of nominal gauge

d Samples provided under 4 4 1g shall be wired with wire conforming to MIL-W-22759/9 or MIL-W-81381/7 of nominal gauge

Source: https://assist.dla.mil -- Downloaded: 2016-11-16T13:24Z
Check the source to verify that this is the current version before use.

e. Samples provided under 4 4 1i, all series II samples, and one each size series I, III, and IV shall be wired with wire conforming to MIL-W-22759/9 or MIL-W-81381/7 of nominal gauge When hermetic receptacles are required, they shall be wired with wires conforming to MIL-W-22759/9 or MIL-W-81381/7

f Samples provided under 4 4 1j shall be wired with wire conforming to MIL-W-25038 of suitable gauge To facilitate wiring, the glass braid may be stripped back so that it is flush with the back of the grommet

4 4 3 Qualification tests

a. Samples provided under 4.4.1a shall be divided as indicated below. Each group shall contain approximately the same number of samples with the larger diameter wire as with the smaller diameter wire. One group shall be subjected to the tests of group 1, table XI, in the sequence indicated One group of series II and three groups of series I, III, and IV shall be subjected to the tests of group 2, table XI, in the sequence indicated

b Samples provided under 4 4.1b shall be divided into two similar groups One group shall be subjected to the tests of group 1, table XI, in the sequence indicated The other group shall be subjected to the tests of group 3, table XI, in the sequence indicated

c Samples provided under 4 4.1c shall be subjected to the test of group 4, table XI, in the sequence indicated (except for receptacles for shell spring finger forces 4 4 1d and 4 4 3d)

d Samples provided under 4 4 1d shall serve as counterparts for the tests of 4 7 26 in group 4, table XI

e. Samples provided under 4.4.1e shall be subjected to the tests of group 5, table XI, in the sequence indicated

f Samples provided under 4 4 1f shall be subjected to the tests of group 6, table XI, in the sequence indicated

g Samples provided under 4 4 1g shall be subjected to the tests of group 7, table XI, in the sequence indicated

h. Samples provided under 4 4 1h shall be subjected to the tests of group 8, table XI, in the sequence indicated

i Samples provided under 4 4 1i shall be subjected to the tests of group 9, table XI, in the sequence indicated

j Samples provided under 4 4 1j shall be subjected to the tests of group 10, table XI, in the sequence indicated

k Samples provided under 4 4 1k shall be subjected to the tests of group 11, table XI, in the sequence indicated

m Samples provided under 4 4 1m shall be subjected to the tests of group 12, table XI, in the sequence indicated

Source: https://assist.dla.mil -- Downloaded: 2016-11-16T13:24Z
Check the source to verify that this is the current version before use.

TABLE XI Qualification and group C periodic tests

Inspection	Requirement paragraph	Test paragraph
Group 1 (all classes and finishes)		
Visual and mechanical examination - - - - - - - - - -	3 1, 3 3 3 4, 3 5, 3.43, and 3 44	4 7 1
Magnetic permeability (except finish D of Series I and II)- - - - - - - - - - - - - - - - - - - -	3 3 4	4 7 41
Maintenance aging (except hermetics)- - - - - - - - -	3 6	4 7 2
Thermal shock (hermetics only)- - - - - - - - - - - -	3 7	4 7 3
Temperature cycling (except hermetics)- - - - - - - -	3 8	4 7.4
Hydrolytic stability (classes J and M only) - - - -	3 48	4 7 44
Air leakage (hermetics only)- - - - - - - - - - - - - -	3 9	4 7 5
Coupling torque -	3 10	4 7 6
Durability- -	3 11	4 7 7
Altitude immersion (except hermetics) - - - - - - - -	3 12	4 7 8
Insulation resistance at ambient temperature - -	3 13 1	4 7 9 1
Dielectric withstanding voltage at sea level - -	3 14	4 7 10 1
Insert retention - - - - - - - - - - - - - - - - - - -	3 15	4 7 11
Shell-to-shell conductivity (finishes A, D, F, N and classes F, G, N, S only)- - - - - - - - - - - - - - -	3.28	4 7 24
Salt spray (corrosion) (finishes A, D, F, N and classes F, G, N, S only)	3 16	4 7 12 1
Coupling torque -	3 10	4 7 6
Shell-to-shell conductivity (finishes A, D, F, N and classes F, G, N, S only)- - - - - - - - - - - - - - -	3 28	4 7 24
Contact resistance (hermetics only) - - - - - - - - -	3 17	4 7 13
Electrical engagement - - - - - - - - - - - - - - - - -	3 18	4 7 14
External bending moment - - - - - - - - - - - - - - -	3 19	4 7 15
Coupling pin strength (series I and II only)- - - -	3 20	4 7 16
Post test examination - - - - - - - - - - - - - - - - -	3 43 and 3 44	4 7 42
Group 2 (all classes except hermetics)		
Visual and mechanical examination - - - - - - - - - -	3 1, 3 3, 3 4, 3 5 3 43, and 3 44	4 7 1
Gauge location -	3 21	4 7 17
Gauge retention -	3 22	4 7 18
Maintenance aging - - - - - - - - - - - - - - - - - -	3 6	4 7 2
Contact retention - - - - - - - - - - - - - - - - - - -	3 23	4 7 19 1
Altitude-low temperature- - - - - - - - - - - - - - -	3 24	4 7 20
Insulation resistance at ambient temperature- - -	3 13 1	4 7 9 1
Dielectric withstanding voltage at sea level- - -	3 14	4 7 10 1
Temperature cycling - - - - - - - - - - - - - - - - - -	3 8	4 7 4
Coupling torque -	3 10	4 7 6
Insulation resistance at elevated temperature - - -	3 13 2	4 7 9 2
Dielectric withstanding voltage at sea level- - - -	3 14	4 7 10 1
Dielectric withstanding voltage at altitude 1/- - -	3 14	4 7 10 2
Durability- -	3 11	4 7 7
Accessory thread strength - - - - - - - - - - - - - - -	3 25	4 7 21
Vibration 1/ -	3 26	4 7 22
Shock -	3 27	4 7 23 1

See footnote at end of table

Source: https://assist.dla.mil -- Downloaded: 2016-11-16T13:24Z
Check the source to verify that this is the current version before use.

TABLE XI Qualification and group C periodic tests - Continued

Inspection	Requirement paragraph	Test paragraph
Group 2 (all classes except hermetics) - continued		
Shell-to-shell conductivity (except finish C and class C)	3 28	4.7.24
High Temperature exposure (series III) 1/	3 37 2	4 7 33 2
Humidity	3 29	4 7 25
Insulation resistance at ambient temperature	3 13 1	4 7 9 1
Dielectric withstanding voltage at sea level	3 14	4 7 10 1
Contact retention	3 23	4 7 19 1
Post test examination	3 43 and 3 44	4.7.42
Group 3 (hermetic receptacles)		
Visual and mechanical examination	3 1, 3 3 3 4, 3 5, 3 43, and 3 44	4.7 1
Thermal shock	3 7	4 7.3
Air leakage	3 9	4.7 5
Insulation resistance at elevated temperature	3 13 2	4 7 9 2
Durability	3 11	4 7 7
Coupling torque	3 10	4 7 6
Vibration 1/	3 26	4 7 22
Shock	3 27	4 7 23 1
Insulation resistance at ambient temperature	3 13 1	4 7 9 1
Dielectric withstanding voltage at sea level	3 14	4 7 10 1
Humidity	3 29	4 7 25
Insulation resistance at ambient temperature	3 13 1	4 7 9 1
Dielectric withstanding voltage at sea level	3 14	4 7.10 1
Contact resistance	3 17	4 7 13
Post test examination	3 43 and 3 44	4 7 42
Group 4 (shells with spring fingers)		
Visual and mechanical examination	3 1, 3 3, 3 4, 3 5, 3 43, and 3 44	4 7 1
Durability (series I, III, and IV)	3 11	4 7 7
Shell spring finger forces	3 30	4 7 26
Shell-to-shell conductivity (except finish C and class C)	3 28	4 7 24
Salt spray (dynamic test) (classes J and M only)	3 16	4 7 12 2
EMI shielding (except finish C and class C)	3 31	4 7 27
Post test examination	3 43 and 3 44	4 7 42
Group 5 (dielectric)		
Visual and mechanical examination	3 1, 3 3 3 4, 3 5 3 43, and 3 44	4 7 1
Ozone exposure	3 32	4 7 28
Insulation resistance at ambient temperature	3 13 1	4 7.9 1
Dielectric withstanding voltage at sea level	3 14	4 7 10 1
Fluid immersion	3 33	4 7 29
Dielectric withstanding voltage at sea level	3 14	4 7 10 1
Coupling torque	3 10	4 7 6
Post test examination	3 43 and 3 44	4 7 42

See footnote at end of table

Source: https://assist.dla.mil -- Downloaded: 2016-11-16T13:24Z
Check the source to verify that this is the current version before use.

TABLE XI Qualification and group C periodic tests - Continued

Inspection	Requirement paragraph	Test paragraph
Group 6 (retention system)		
Visual and mechanical examination - - - - - - - - - -	3 1, 3 3, 3 4, 3 5, 3 43, and 3 44	4 7 1
Retention system fluid immersion- - - - - - - - - - -	3 33 1	4 7 29 1
Contact retention - - - - - - - - - - - - - - - - - -	3 23	4 7 19
Post test examination - - - - - - - - - - - - - - - -	3 43 and 3 44	4 7 42
Group 7 (retention system)		
Visual and mechanical examination - - - - - - - - - -	3 1, 3 3, 3 4 3 5 3 43, and 3 44	4 7 1
Pin contact stability - - - - - - - - - - - - - - - -	3 34	4 7 30
Contact walkout - - - - - - - - - - - - - - - - - - -	3 35	4 7 31
Installing/removal tool abuse - - - - - - - - - - - -	3 36	4 7 32
High Temperature Exposure with contact loading- - -	3 37 1	4 7 33 1
Insert retention- - - - - - - - - - - - - - - - - - -	3 15	4 7 11
Post test examination - - - - - - - - - - - - - - - -	3 43 and 3 44	4 7 42
Group 8 (hermetic receptacles mated with crimp counterparts)		
Visual and mechanical examination - - - - - - - - - -	3 1 3 3, 3 4, 3 5 3 43, and 3 44	4 7 1
Contact resistance - - - - - - - - - - - - - - - - -	3 17	4 7 13
Contact engagement and separating force - - - - - -	3 41	4 7 37
Resistance to probe damage- - - - - - - - - - - - - -	3 42	4 7 38
Contact engagement and separating force - - - - - -	3 41	4 7 37
Contact plating thickness (hermetic)- - - - - - - - -	3 40	4 7 36
Post test examination - - - - - - - - - - - - - - - -	3 43 and 3 44	4 7 42
Group 9 (series I and II - finishes B, C, and E and series I, finish N) (series III and IV - classes C, F, G H, J, K , N, M, S, W, and Y)		
Visual and mechanical examination - - - - - - - - - -	3 1 3 3 3 4 3 5 3 43, and 3 44	4 7 1
Shock (high impact) (series I, III, and IV only)- -	3 27	4 7 23 2
Dielectric withstanding voltage (at sea level)- - -	3 14	4 7 10 1
Electrolytic erosion (series III and IV)- - - - - - -	3 38	4 7 34
Shell-to-shell conductivity (except finishes C, N and classes C, F G, N, and S)- - - - - - - - - - -	3 28	4 7 24
Salt spray (dynamic test) (except classes F G, N and S and finish N) - - - - - - - - - - - - - - - - -	3 16	4 7 12 2
Coupling torque - - - - - - - - - - - - - - - - - - -	3 10	4 7 6
Shell-to-shell conductivity (except finishes C, N, and classes C F, G, N, and S)- - - - - - - -	3 28	4 7 24
Coupling pin strength (series I and II only)- - - -	3 20	4 7 16
Post test examination - - - - - - - - - - - - - - - -	3 43 and 3 44	4 7 42

See footnote at end of table

Source: https://assist.dla.mil -- Downloaded: 2016-11-16T13:24Z
Check the source to verify that this is the current version before use.

TABLE XI Qualification and group C periodic tests - Continued.

Inspection	Requirement paragraph	Test paragraph
Group 10 (firewall-classes K and S)		
Visual and mechanical examination - - - - - - - - - -	3.1, 3.3, 3.4, 3 5, 3 43, and 3.44	4.7.1
Firewall (classes K and S connectors) - - - - - - -	3.39	4.7 35
Group 11 (series I, III, and IV)		
Visual and mechanical examination - - - - - - - - - -	3 1, 3 3, 3 4, 3.5, 3.43, and 3 44	4 7 1
Ice resistance- - - - - - - - - - - - - - - - - - - -	3 45	4 7.39
Dust (fine sand)- - - - - - - - - - - - - - - - - - -	3 46	4.7.40
Impact classes J and M- - - - - - - - - - - - - - - -	3.51	4 7.47
Post test examination - - - - - - - - - - - - - - - -	3 43 and 3 44	4.7 42
Group 12 (series I, II, III, and IV)		
Insert grommet bonding - - - - - - - - - - - - - - - -	3 49	4 7.45
Thermal vacuum outgassing (classes G and H) 1/- - -	3 47	4 7 43

1/ Qualification only

4 4 3.1 Failures One or more failures shall be cause for refusal to grant qualification

4 4 4 Retention of qualification. To retain qualification, the contractor shall forward a report at least every 12 months to the qualifying activity The qualifying activity shall establish the reporting date. The report shall consist of the following

a A summary of the results of the tests performed for groups A and B inspection indicating as a minimum number of lots that have passed and the number that have failed. The results of tests of all reworked lots shall be identified and accounted for.

b A summary of the results of tests performed for group C inspection including the number and mode of failures The summary shall include results of all group B inspection tests performed and completed during the reporting period If the summary of the test results indicates nonconformance with specification requirements, and corrective action acceptable to the qualifying activity has not been taken, action may be taken to remove the failing product from the qualified products list Failure to submit the report within 30 days after the end of each reporting period may result in loss of qualification for the product In addition to the periodic submission of inspection data, the contractor shall immediately notify the qualifying activity if at any time during the reporting period that the inspection data indicates failure of the qualified product to meet the requirements of this specification

Source: https://assist.dla.mil -- Downloaded: 2016-11-16T13:24Z
Check the source to verify that this is the current version before use.

In the event that no production occurred during the 12-month reporting period, a report shall be submitted certifying that the company still has the capabilities and facilities necessary to produce the item If during two consecutive reporting periods there has been no production, the manufacturer may be required, at the discretion of the qualifying activity, to submit the products (a representative product of each connector) to testing in accordance with the qualification inspection requirements

4 5 Quality conformance inspection

4 5 1 Inspection of product for delivery Inspection of product for delivery shall consist of groups A and B inspections

4 5 1 1 Group A inspection Group A inspection shall consist of the visual and mechanical inspections specified in table XII The documentation requirements of MIL-STD-1344 do not apply

TABLE XII Group A inspection 1/

Inspection	Requirement paragraph	Test paragraph
Visual inspection 2/ - - - - - - - - - - - - - - - -	3 1, 3 3, 3 4, 3 5, 3 43, and 3 44	4 5 1 1 1
Critical examination 2/ 3/ - - - - - -	3 1	4 5 1 1 2
Insulation resistance at ambient temperature 2/ 3/ 4/ - - - - - - - - - -	3 13 1	4 7.9 1
Dielectric withstanding voltage at sea level 2/ 3/ 4/ - - - - - - - - - - - - - - - -	3 14	4 7 10 1
Air leakage (hermetics only) 2/ 3/ - - -	3 9	4 7 5

1/ Contacts shipped with connectors other than hermetics shall be from lots that have met the requirements of MIL-C-39029
2/ 100-percent inspection
3/ The contractor may use in-process controls for this requirement
4/ Test between two adjacent contacts and between two peripheral contacts and the shell

4 5 1 1 1 Visual examination (group A inspection) Each connector and accessory shall be visually examined for completeness, workmanship, and identification requirements Attention shall be given to those assemblies that require a gasket to determine the condition of the gasket Gaskets missing, twisted, buckled, kinked, or damaged in any way shall be cause for rejection Each connector (except hermetics) shall be visually inspected for the presence of compound between wire termination end of insert and shell

4 5 1 1 2 Critical examinations (group A inspection) The following dimensions and features shown on the pertinent military standard are considered critical

a Mating diameters H and W for series I, II, and III, LL, L and MM for series IV of figures 1, 2, 3, and 7 (maximum on plugs, minimum on receptacles)

b Key or keyway positions

c Contact pattern relative to datum features (hermetics only)

d Registration of grommet and insert markings (Hole pattern between the grommet and the front face of the insert)

Source: https://assist.dla.mil -- Downloaded: 2016-11-16T13:24Z
Check the source to verify that this is the current version before use.

4 5 1 2 Group B inspection Group B inspection shall consist of the inspections specified in table XIII in the order shown and shall be made on sample units which have been subjected to and have passed the group A inspection For group B inspection, the documentation and standard test conditions of MIL-STD-1344 do not apply

4 5 1 2 1 Sampling plan (group B inspection) The sampling plan shall be in accordance with MIL-STD-105 for special inspection S-4 Major and minor defects shall be as defined in MIL-STD-105 The sample size shall be based on the inspection lot size The AQL shall be as specified in table XIII

4 5 1 2 2 Lot definition (group B inspection) The production lot definition of MIL-STD-790 is further defined as follows·

a A production lot consists of all connectors covered under one military specification or standard, manufactured from the specified raw materials, processed under the same specification and procedures, produced by the same type of equipment, and submitted for inspection at one time Each production lot of assembled connectors shall be a group identified by a common manufacturing record through all significant assembly operations

b Traceability of connectors to specific physical/chemical test reports of incoming raw material is not required

c Common manufacturing records and traceability shall begin with the start of connector assembly

TABLE XIII Group B inspection

Inspection	Requirement paragraph	Test paragraph	AQL
Visual and mechanical examination 1/- - - -	3.1, 3.3, 3 4 3 5, 3 43, and 3 44	4 7.1	
Major -			0 25
Minor -			1 0
Temperature cycling (classes J and M) 1/ 3/-	3.8	4 7 4	---
Contact engaging and separating forces (hermetic sockets only) 1/- - - - - - - -	3 41	4 7 37	0 25
Contact resistance (hermetics only) 2/ - - -	3 17	4 7 13	1 0
Shell spring finger forces (plugs with spring fingers only) 1/ 3/ - - - - - - -	3 30	4 7 26	---

1/ The contractor may use in-process controls for this requirement
2/ Select sample connectors in accordance with the AQL shown Test three contacts in each sample connector
3/ Test five pieces - No failures permitted

4 5 1 2 3 Disposition of sample units Sample units which have passed all of group B inspection may be delivered on the contract or purchase order if the lot is accepted and the sample units are still within specified tolerances

4 5 2 Periodic inspection Periodic inspection shall consist of group C inspection Except where the results of this inspection show noncompliance with the applicable requirements (see 4 5 2 1 5), delivery of products which have passed groups A and B inspections shall not be delayed pending the results of this periodic inspection

Source: https://assist.dla.mil -- Downloaded: 2016-11-16T13:24Z
Check the source to verify that this is the current version before use.

4 5 2 1 Group C inspection (periodic tests) Periodic tests shall be performed on a 12-month and 24-month basis, beginning with the 12-month periodic test, which must be accomplished within this period after notification of qualification and alternating thereafter with the 24-month periodic test Samples submitted to either of these periodic tests shall have passed groups A and B inspections

4 5 2 1 1 Twelve-month periodic test The following tests shall be performed as follows

a On two mating connectors in 35 arrangements of the largest shell size in regular production during that period - Humidity in accordance with 4 7 25

b On one mating pair of connectors of any representative shell size for each contact size qualified and arrangement - high temperature exposure with contact loading in accordance with 4 7 33 except that the time period shall be 250 hours

c On two mating connectors of any representative size and arrangement, one pair being subjected to each of the specified fluids - fluid immersion in accordance with 4 7 29 except that the fluids shall be

(1) MIL-T-5624, JP-5, sample 7, table XVII

(2) Hydraulic fluid 1/, sample 4, table XVII

d On one receptacle shell and plug shell (with coupling nut) of any small and large shell size of each finish style qualified conduct the salt spray test of 4 7 12

4 5 2 1 2 Twenty-four month periodic tests Every 24 months, mating connector sample units shall be selected and tested in accordance with the following

a For each series qualified, two mating plugs and receptacles from each shell size range and having each service rating represented shall be provided Three mating plugs and receptacles shall be provided if a manufacturer has qualified only one series The three shell size ranges are small (sizes 8 through 13), medium (sizes 14 through 19), and large (sizes 20 through 25) One mating pair from each shell size range shall be fully wired with the applicable wire listed in column A of table X and subjected to the applicable tests of table XI, group 1 The remaining samples shall be fully wired with the applicable wire listed in column B of table X and subjected to the applicable tests of table XI, group 2

b On one receptacle shell and plug shell (with coupling nut) of any small and large shell size of each finish style qualified conduct the salt spray test of 4 7 12

c Two mating plugs and hermetic receptacles in each series shall be provided These samples shall include at least three shell sizes, small (sizes 8 through 13), medium (sizes 14 through 19), and large (sizes 20 through 25) manufactured during the period, and all three service ratings One mating sample of each configuration shall be fully wired per 4 4 2b and subjected to the applicable tests of table XI, group 1 The remaining samples shall be fully wired per 4 4 2b and subjected to the applicable test of table XI, group 3

d Sufficient hermetic receptacles shall be provided to furnish a minimum of 50 socket contacts of each mating end size Mating plugs with pin contacts shall be provided to furnish mating pins These samples shall be fully wired with wire of nominal gauge conforming to MIL-W-81381 and MIL-W-22759 and subjected to the tests of table XI, group 8

1/ M2-V Chevron Oil, or equivalent

Source: https://assist.dla.mil -- Downloaded: 2016-11-16T13:24Z
Check the source to verify that this is the current version before use.

4 5 2 1 3 Failures. If one or more sample units fail to pass group C inspection, the sample shall be considered to have failed

4 5 2 1 4 Disposition of sample units Sample units which have been subjected to group C inspection shall not be delivered on the contract or purchase order.

4 5 2 1.5 Noncompliance. If a sample fails to pass group C inspection, the manufacturer shall take corrective action on the materials or processes or both, as warranted, and on all units of product which are to be corrected and which were manufactured with essentially the same materials and processes, and which are considered subject to the same failure Acceptance and shipment of the product shall be discontinued until corrective action acceptable to the qualifying activity has been taken After the corrective action has been taken, group C inspection shall be repeated on additional sample units (all inspections, or the inspection which the original sample failed, at the option of the qualifying activity). Groups A and B inspections may be reinstituted; however, final acceptance shall be withheld until the group C reinspection has shown that corrective action was successful. In the event of failure after reinspection, information concerning the failure shall be furnished to the cognizant inspection activity and the qualifying activity

4 5 3 Failures of groups A, B, or C. Lots which fail groups A, B, or C and are not resubmitted for testing or failed resubmission shall not be shipped and the "JAN" marking shall be removed within 30 days

4 6 Inspection of packaging The sampling and inspection of the preservation packaging, packing and container marking shall be in accordance with the requirements of MIL-C-55330

4 7 Methods of inspection.

4 7 1 Visual and mechanical examination

4.7.1.1 Connectors. The connectors, accessories, and piece parts shall be visually and mechanically examined to ensure conformance with the specification and the applicable military standards (see 3 1, 3 3, 3 4, 3 5, 3 43, and 3.44). The contractor may use in-process controls to satisfy these requirements.

4 7 1 2 Contacts (hermetics only). The contacts shall be visually examined for mechanical defects (see 3 1, 3 3, 3 4, 3 5, and 3 44) The contacts shall be inspected through a device having a magnification power of approximately three diameters The contractor may use in-process controls to satisfy these requirements

4 7 2 Maintenance aging (except hermetics) (see 3.6) Connectors shall be tested in accordance with method 2002 of MIL-STD-1344. The following detail shall apply Installing/removal tool shall be in accordance with MIL-I-81969/8 and MIL-I-81969/14 A minimum of 20 percent, but not less than three contacts of each connector shall be tested Fifty percent of maintenance aging shall be performed with M81969/8 tools and fifty percent with M81969/14 tools. There shall be no lubricant used during this test

4 7 3 Thermal shock (hermetics only) (see 3 7). Unmated receptacles shall be subjected to 10 cycles of thermal shock in the following manner

a Step 1. The receptacle shall be suspended for 10 +1, -0 minutes in the center of a cold water bath with a volume of approximately 1 cubic foot No dimension of the bath shall be less than 10 inches (254.0 mm) The water temperature shall not exceed +4°C

Source: https://assist.dla.mil -- Downloaded: 2016-11-16T13:24Z
Check the source to verify that this is the current version before use.

b Step 2 The receptacle shall be suspended for 10 +1, -0 minutes in the center of a hot water bath with a volume of approximately 1 cubic foot No dimension of the bath shall be less than 10 inches (254 0 mm) The water temperature shall be not less than +90°C

The time of transfer from one bath to the other shall not exceed 5 seconds At the end of the 10th cycle, the receptacle shall have the excess moisture shaken off and then be dried in a forced air oven at 66°C ±5°C for 15 ±1 minutes

4 7 4 Temperature cycling (all classes except hermetics) (see 3 8) Mated connectors shall be subjected to the temperature cycling of MIL-STD-1344 method 1003, test condition A, except that steps 2 and 4 shall be of 2 minutes maximum duration The temperature of step 1 shall be -65°C +0°C, -5°C, and the temperature of step 3 shall be 150°C for finish A of series I and II, 175°C for finish B of series I and II and classes W and J of series III and IV, and +200°C for all other finishes and classes

4 7 5 Air leakage (hermetics only) (see 3 9) The connector shall be subjected to method 1008 of MIL-STD-1344 Pressure differential across the connector shall be 1 atmosphere

4 7 6 Coupling torque (see 3 10) For qualification testing, mating halves shall be coupled and uncoupled, the axial mating force (series IV) and the torque which must be applied to facilitate full coupling and uncoupling shall be measured and recorded

4 7 7 Durability (see 3 11) The wired, assembled plugs, and receptacles shall be mated and unmated 250 cycles for series II with spring fingers and lanyard release plugs 1500 cycles for classes J and M (contacts may be changed after 500 cycles when contact styles P or S are used) Five hundred cycles for all other connectors, at a rate of 300 cycles per hour maximum The mating and unmating shall be accomplished so that the plug and receptacle are completely separated during each cycle

4 7 8 Altitude immersion (except hermetics) (see 3 12). Mated connectors shall be tested in accordance with method 1004 of MIL-STD-1344 The following details shall apply

a All wire ends shall be located within the chamber and exposed to the chamber atmosphere but not submerged or sealed

b At the end of the third cycle while the connectors are still submerged in the solution, the insulation resistance at ambient temperature, shall be measured as specified in 4 7 9 1 and the dielectric withstanding voltage test shall be performed as specified in 4 7 10 1

4 7 9 Insulation resistance

4 7 9 1 Insulation resistance at ambient temperature (see 3 13 1) Unmated connectors shall be tested as specified in method 3003 of MIL-STD-1344 The following details and exceptions apply·

a For lot acceptance testing, where it is undesirable to install actual contacts in connectors, simulated contacts and special techniques may be used in performing this test

b The tolerance on the applied voltage shall be ±10 percent

c Connectors shall be mated when testing after altitude immersion humidity and altitude low temperature

Source: https://assist.dla.mil -- Downloaded: 2016-11-16T13:24Z
Check the source to verify that this is the current version before use.

4 7 9 2 Insulation resistance at elevated temperature (see 3 13 2) Unmated connectors shall be tested as specified in method 3003 of MIL-STD-1344 The following details and exceptions shall apply

a The tolerance on the applied voltage shall be ±10 percent

b Applicable elevated temperature for 30 minutes

(1) Series I and II Finishes A and D 150°C +5°C, -0°C, B 175°C +5°C, -0°C, C, E, F and N 200°C +5°C, -0°C

(2) Series III and IV Classes J and W 175°C +5°C, -0°C, C, F, G, H, K, N, M, S, and Y· 200°C +5°C, -0°C

c Measurements shall be made while the connectors are still in the chamber at the specified temperature

4 7 10 Dielectric withstanding voltage (see 3 14)

4 7 10 1 Dielectric withstanding voltage at sea level Wired, unmated connectors shall be tested in accordance with method 3001 of MIL-STD-1344 Connectors shall be mated when testing after altitude immersion, humidity, and altitude low temperature The following details and exceptions apply·

a The magnitude of the test voltage shall be as specified in table XIV

b Fifty percent of the contacts available shall be tested, but in no case shall less than six dielectric withstanding voltage readings be taken If the number of contacts is three or less, all contacts shall be tested The test voltage shall be applied between each wired contact, and each adjacent contact, and the shell

c The test voltage shall be maintained at the specified value for 2 seconds minimum

d For quality conformance, simulated contacts and special techniques may be used in performing this test

TABLE XIV Test voltages, ac rms, 60 Hz

Altitude	Service rating M		Service rating N		Service rating I		Service rating II	
	Mated	Unmated	Mated	Unmated	Mated	Unmated	Mated	Unmated
Sea level	1300	1300	1000	1000	1800	1800	2300	2300
50,000 feet	800	550	600	400	1000	600	1000	800
70,000 feet	800	350	600	260	1000	400	1000	500
100,000 feet	800	200	600	200	1000	200	1000	200

4 7 10 2 Dielectric withstanding voltage at altitude Mated connectors and unmated connector halves with pin contacts shall be tested in accordance with method 3001 of MIL-STD-1344 with the following details and exceptions

a The magnitude of the test voltage shall be as specified in table XIV

Source: https://assist.dla.mil -- Downloaded: 2016-11-16T13:24Z
Check the source to verify that this is the current version before use.

b Fifty percent of the contacts available shall be tested, but in no case shall less than six dielectric withstanding voltage readings be taken If the number of contacts is three or less, all contacts shall be tested The test voltage shall be applied between each wired contact and each adjacent contact and the shell

c The test voltage shall be maintained at the specified value for 2 seconds minimum

d The leads of all test circuits shall be brought out through the walls of the chamber There shall be no wire splices inside the chamber The wire ends of all leads shall be unsealed

e Only the engaging faces of hermetics and box mounting receptacle connectors shall be subjected to the high altitude The rear face shall be suitably protected.

f The chamber shall be evacuated to each of the specified altitude pressure equivalents listed below

Altitude	Equivalent pressure
50,000 feet	87 torr
70,000 feet	33 torr
100,000 feet	8 torr

4 7 11 Insert retention (see 3 15) Unmated connectors shall be tested in accordance with method 2010 of MIL-STD-1344 with the following details and exceptions

a Force to be applied 100 ±5 pounds per square inch with a 25 pounds minimum force

b Connectors may be wired

4 7 12 Salt spray (corrosion) (see 3 16)

4 7 12 1 Standard test (series I and II, finishes A, D, F, and N, series III and IV, classes F, G, N, and S) Unmated connectors shall be tested in accordance with method 1001 of MIL-STD-1344 The following details and exceptions shall apply

a Test condition letter B, except series I and II, finish D is for 24 hours

b The samples shall not be mounted but shall be suspended from the top of the chamber using waxed twine or string, glass rods, or glass cord

c Wire ends must be protected to prevent salt migration

4 7 12 2 Dynamic test (series I and II, finishes B, C, and E, and series III and IV, classes C, H, J, K, M, W, and Y) The wired, assembled plugs and receptacles shall be mated and unmated 50 cycles at a rate of 300 cycles per hour maximum The mating and unmating shall be accomplished so that the plug and receptacle are completely separated during each cycle The connectors shall then be subjected to the salt spray test in accordance with method 1001 of MIL-STD-1344 The following details and exceptions apply

a The connectors (series I and II, finishes B, C, and E, and series III and IV, classes C, H, K, W, and Y) shall be tested for 452 hours mated followed by 48 hours unmated For initial qualification, the connectors (series III and IV, classes J and M), shall be subjected to 50 cycles durability followed by 1952 hours salt spray mated, then 48 hours salt spray unmated followed by 1450 cycles durability For periodic, inspection the connectors (series III and IV, classes J and M) shall be tested 452 hours mated followed by 48 hours unmated

Source: https://assist.dla.mil -- Downloaded: 2016-11-16T13:24Z
Check the source to verify that this is the current version before use.

b The connectors shall not be mounted but shall be suspended from the top of the chamber using waxed twine or string, glass rods, or glass cord

c Wire ends must be protected to prevent salt migration

After the salt spray exposure the remaining number of durability cycles specified in 4 7 7 shall be completed

4 7 13 Contact resistance (hermetics only) (see 3 17) Contacts of mated connectors shall be tested in accordance with method 3004 of MIL-STD-1344

4 7.14 Electrical engagement (see 3.18) Counterpart plugs and receptacles shall be wired so it provides a complete series circuit through all contacts of the mated connector A suitable power source and indicator shall be provided such that the earliest point at which the circuit is completed, during normal connector mating, can be established Connector halves shall be slowly mated by the normal mating means until first indication of a completed circuit is observed. Means shall be provided to assure that electrical contact is made between the pin and the spring of the socket contact, rather than the hood of the socket contact The mating operation shall be held at this point and the overall connector length shall be measured from solid reference points on the connector halves The mating operation shall then be continued until the connector halves are in the completely mated position A second overall length measurement shall then be taken from the same reference points The difference of these two measurements shall be not less than specified in 3 18 Both the outer shield and inner conductor circuits shall be included in the test of shielded contacts

4 7 15 External bending moment (see 3.19) The receptacle connector shall be mounted as in normal service to a rigid panel Before mating the plug connector to the receptacle, an adapter or test torque arm shall be attached as shown on figure 21 After mating the plug and receptacle connectors, the distance "L" from the point of load application P" to the mounting panel shall be determined The load to be applied at point "P" shall then be determined as the bending moment listed in table XV divided by the level arm "L" This load shall be applied at a rate of approximately 10 pounds per second until the required load is achieved The applied load shall be held for 1 minute, then the load shall be released Continuity of the contacts shall be monitored during the test The test circuit used to monitor this shall be capable of detecting a discontinuity in excess of 1 microsecond

TABLE XV External bending moment

Series I		Series II		Series III		Series IV	
Size	Pound-inches	Size	Pound-inches	Size	Newton-meters	Size	Newton-meters
9	75	8	50	9	11 3	9	---
11	230	10	75	11	33.9	11	26 0
13	310	12	75	13	45 2	13	35 0
15	380	14	100	15	56 5	15	42 9
17	450	16	125	17	67 8	17	50 9
19	500	18	125	19	79 1	19	56 5
21	530	20	125	21	90 4	21	59.9
23	650	22	125	23	101 7	23	73.5
25	650	24	150	25	113 0	25	73 5

Source: https://assist.dla.mil -- Downloaded: 2016-11-16T13:24Z
Check the source to verify that this is the current version before use.

4.7 16 Coupling pin strength (series I and II only (see 3 20)) One coupling pin in each receptacle shall be subjected to 50 +5, -0 pounds load applied to the swaged end along the major axis of the coupling on swaged pins, and perpendicular to the pin centerline on the exposed portion of welded or brazed pins A steel test tip shall be used for application of the load on swaged pins A steel test fixture contoured to the shape of the coupling pin shall be used for application of the load on the welded or brazed pins.

4 7 17 Gauge location (see 3 21) Applicable test gauges, conforming to figures 15, 16, 19, and 20 shall be installed in three randomly selected cavities in each connector, with the accessory rear hardware removed With each test gauge fully seated back against its contact retention device, the axial location of the front end of each gauge shall be measured relative to the reference point indicated on figures 1, 2, 3, and 4, as applicable The test shall be repeated on pin assemblies using gauges conforming to figure 16 and seating them forward in the contact cavity

4 7 18 Gauge retention (see 3.22). Applicable test gauges, conforming to figures 15, 17, and 18 shall be installed in three randomly selected cavities in each connector, with the accessory rear hardware removed. The axial load specified in 4 7.19 shall be applied to individual test gauges in both directions. The load shall be applied at a rate of approximately 1 pound per second until the specified load has been reached Gauge displacement shall be measured with respect to the connector shell after an initial load of 2 pounds has been applied to assure that all slack has been taken up

4 7 19 Contact retention (see 3 23) Unless otherwise specified, contacts shall be tested to procedures I and II

4 7 19 1 Procedure I The contact retention shall be tested as specified in method 2007 of MIL-STD-1344. The following details and exceptions shall apply.

a Number of samples - The test shall be performed on 20 percent of the contact complement, but not less than three contacts in each connector half

b Applied axial load - Preload to 3 pounds maximum, (13 6 Newtons) Apply load as specified in table XVI

c Special requirements - Where the test sequence required maintenance aging prior to contact retention, the contacts which were subjected to maintenance aging shall also be selected for contact retention

d Axial direction - The applicable forces shall be applied along the longitudinal axis of individual contacts in the direction tending to displace the contacts to the rear

e Only the contacts to be tested need be installed in the connector

4 7 19 2 Procedure II The contact retention shall be tested as specified in method 2007 of MIL-STD-1344 The following details and exceptions shall apply

a 4 7 19 1(a) through 4 7 19 1(c) apply

b Axial direction - Same as 4 7 19.1(d), except the direction shall tend to displace the contacts to the front

c Only the contacts to be tested need be installed in the connector

Source: https://assist.dla.mil -- Downloaded: 2016-11-16T13:24Z
Check the source to verify that this is the current version before use.

TABLE XVI. Contact retention

Contact	Load ±10 percent	
	Pounds	Newtons
22 1/, 22D, 22M 1/	10	44
20	15	67
16	25	111
12	25	111
8	25	111
10	25	111
8 Triax	25	111

1/ Inactive for new design

4.7.20 Altitude-low temperature (see 3.24) Wired, mated, assembled connectors shall be subjected to the test specified in method 1011 of MIL-STD-1344. The following details apply

a No wire ends or splices inside the chamber.

b. Dielectric withstanding voltage test to be performed after return to ambient conditions shall be in accordance with 4.7.10.1

c Insulation resistance test to be performed at 100,000 feet at -65°C and shall be in accordance with 4.7.9.1.

4 7 21 Accessory thread strength (see 3 25). The mated connector shall be mounted as in normal service to a rigid panel. The torque wrench shall be attached as shown on figure 22 After mating the plug and receptacle connectors, a torque shall be applied to the accessory end of the plug at a rate of approximately 10 pounds per second until the required torque is achieved The applied load shall be held for 1 minute, then the load shall be released. The test shall then be repeated on the accessory end of the receptacle.

4 7.22 Vibration (qualification only)(see 3.26). Wired and mated connectors shall be subjected to the applicable test(s) specified Connectors shall be mounted on the vibration table by normal means All contacts shall carry a test current of 100 milliamperes maximum and shall be continuously monitored for discontinuities throughout the test. A detector capable of detecting any discontinuities in excess of 1 microsecond shall be used. All series I and II connectors shall have the wire bundles clamped to fixed points at least 8 inches (203 2 mm) behind the connector All series I, III, and IV plugs shall have an accessory load fixture in accordance with figure 23 attached during vibration.

4.7 22 1 Random vibration (series II). Connectors shall be subjected to the test specified in method 2005 of MIL-STD-1344 The following details shall apply:

a. Test condition VI, letter "J", except class Y shall be tested to letter "G"

b Duration shall be 8 hours in the longitudinal direction and 8 hours in a perpendicular direction for a total of 16 hours

c Means may be provided to relieve hermetic solder terminations, and jumper wires may be used between contacts

Source: https://assist.dla.mil -- Downloaded: 2016-11-16T13:24Z
Check the source to verify that this is the current version before use.

4 7 22 2 Vibration (series I, III, and IV) Connector samples shall be divided equally and subjected to vibration as indicated

a Series I
Sine vibration per 4 7 22 2 2
Random vibration per 4 7 22 2 3
Random vibration per 4.7 22 2 4

b Series III
Sine vibration per 4.7.22 2.1
Random vibration per 4 7 22 2 3
Random vibration per 4 7 22 2 4

c Series IV
Sine vibration per 4 7.22 2 2
Random vibration per 4 7 22 2 3
Random vibration per 4 7 22 2 4

Means may be provided to relieve hermetic solder terminations, and jumper wires may be used between contacts

4 7 22 2 1 Sine vibration (series III) Connector samples shall be subjected to a simple harmonic motion from 10 to 2,000 Hz in each of three mutually perpendicular axes The level of vibration shall be a velocity of 254 mm/sec from 10-50 Hz, 1.5 mm double amplitude from 50-140 Hz, and 60 G from 140-2,000 Hz The entire frequency range from 10-2,000 Hz and back shall be traversed in 20 minutes. The vibration shall be applied for a duration of 12 hours in each of the three mutually perpendicular axes for a total of 36 hours Each axis of vibration shall be accomplished by vibrating for 4 hours at room ambience, 4 hours at -55°C ±5°C, and 4 hours at +175°C ±5°C for classes J and W, and 200°C ±5°C for classes C, F, G, H, K, N, M, S, and Y

4 7 22 2 2 Sine vibration (series I and IV) Connectors shall be subjected to the test specified in method 204, test condition G, of MIL-STD-202.

4 7 22 2 3 Random vibration (series I, III, and IV) Connectors shall be subjected to the test specified in method 2005 of MIL-STD-1344 The following details shall apply

a Test condition VI - Letter 'J' Series III at elevated temperature and series I and IV at ambient temperature

b Vibration to be at the following temperatures

(1) Series III, classes J and W 175°C ±5°C, classes C, F, G, H, K, N, P, M, S, and Y 200°C ±5°C

(2) Series IV Ambient temperature

c Duration shall be 8 hours in the longitudinal direction and 8 hours in a perpendicular direction for a total of 16 hours for classes C, E, F, G, J, K, N, P, M, S, T, and W Duration shall be 4 hours in the longitudinal direction and 4 hours in a perpendicular direction for a total of 8 hours for classes H Y, and N hermetic receptacles

Source: https://assist.dla.mil -- Downloaded: 2016-11-16T13:24Z
Check the source to verify that this is the current version before use.

4 7 22 2.4 Random vibration (series I, III, and IV) Connectors shall be subjected to the test specified in method 2005 of MIL-STD-1344 The following details shall apply

a Test condition V - Using the vibration envelope shown on figure 29 (Derived from zone 2, outlined in Aerospace Information Report AIR 1557)

b Vibration to be conducted at ambient temperature.

c. Duration shall be 8 hours in the longitudinal direction and 8 hours in a perpendicular direction for a total of 16 hours

d. Figure 23 test accessory shall not be required.

4 7 23 Shock (see 3 27) Wired and mated connectors shall be subjected to the applicable test specified. Connectors shall be mounted by normal means and held together by normal coupling means. All contacts shall be wired in a series circuit with 100 milliamperes maximum current flow through the series circuit during shock Connectors shall be monitored for any discontinuities. A detector capable of detecting all discontinuities in excess of 1 microsecond shall be used.

4.7 23 1 Standard shock (all series). Connectors shall be subjected to the test specified in method 2004 of MIL-STD-1344 The following details shall apply

a The pulse shall be an approximate half sine wave of 300 G ±15 percent magnitude with a duration of 3 ±1 milliseconds

b The wire bundle shall be clamped to fixed points at least 8 inches (203.2 mm) from the rear of the connector.

4 7 23 2 High-impact shock (series I, III, and IV). Wired and mated connectors shall be subjected to the test specified in MIL-S-901, grade A with the following modifications and additions. Mounting fixture shall be in accordance with MIL-S-901, light weight. The wire bundle shall be supported on a stationary frame in such a manner to provide a free flexing length between the frame and fixture of not less than 36 inches (914.4 mm). Plug shall be terminated with at least 80 percent of wired contacts. The wire bundle shall be provided with a straight, environmental, backshell, category 2B of MIL-C-85049, the longest length available per shell size

4 7 24 Shell-to-shell conductivity (except finish C and class C) (see 3.28) Mated connectors shall be subjected to the test specified in method 3007 of MIL-STD-1344.

4 7 25 Humidity (see 3.29) Wired, mated connectors shall be subjected to the humidity test specified in method 1002 of MIL-STD-1344 The following details and exceptions shall apply

a Test condition letter - Type II.

b The mated connectors shall be mounted in a vertical position

c Step 7(a) shall be performed during the last 5 cycles.

d Three hours minimum after the start of step 7(a) during the final cycle and while the connectors are still subjected to high humidity, the insulation resistance shall be measured when the chamber temperature reaches 20°C ±5°C and condensation is observed on the connector

e For qualification testing, insulation resistance readings shall be made on a minimum of 50 percent of the circuits Outer circuits shall be measured to the connector shell

Source: https://assist.dla.mil -- Downloaded: 2016-11-16T13:24Z
Check the source to verify that this is the current version before use.

4 7 26 Shell spring finger forces (see 3 30) Plugs shall be completely mated and unmated 10 times with counterpart receptacles less coupling pins (if applicable) and inserts On the mating of the first cycle, the forces necessary to engage the connectors shall be within the values specified in table VI On the unmating of the last cycle, the forces necessary to separate the connectors shall be within the value specified in table VI When measuring the engagement and separation forces, the axial loads shall be applied at a displacement rate of 0.5 inches per minute

4 7 27 EMI shielding (except finish C and class C) (see 3.31)

4 7 27 1 EMI shielding (from 100 to 1,000 MHz only) The EMI shielding effectiveness of mated connectors with EMI backshells (backshells may be soldered to the connector) shall be measured in a triaxial radio frequency leakage fixture as shown on figure 24 The EMI leakage from the conductor inside the connector in the same inner coaxial line into the outer coaxial line shall be measured at the frequencies specified in table VII within a frequency accuracy of ±5 percent The level of detected signal power shall be indicated by a tunable radio frequency field intensity meter isolated from the test circuit by a 3 to 10 dB pad. Care shall be taken to ensure that the signal is a result of EMI leakage from within the mated connector and not due to a faulty termination inside the fixture All terminations inside the fixture, whether to the EMI backshells or between internal conductors, shall have a leakage at least 10 dB less than the test requirements The signal source shall be set to the desired frequency The signal shall be fed through a 3 to 10 dB isolation pad to a parallel circuit consisting of a coaxial switch (DPDT) so connected that the signal can be manually or electronically fed alternately to the fixture and to a variable 100 dB reference attenuator The attenuator shall be adjustable in 1 dB steps and calibrated to ±3 dB

a The inserts may be removed from the connectors under test or the contacts removed and a hole drilled through the inserts to accommodate a center conductor of suitable geometry to provide a good 50-ohms impedance match with the inside diameter of the mated connector shells and EMI backshells Tapered transition may be used to provide a means of changing diameters without introducing significant discontinuities in the line. The maximum VSWR in the inner coaxial line shall be 1.5 The outer shell of the test fixture shall be so constructed as to provide a good 50-ohms impedance match with the outside diameter of the mated connector shells, coupling ring, and EMI backshells The maximum VSWR of the outer coaxial line shall be 1 5

b A sliding circumferential short shall be positioned behind the connector on the signal input end of the fixture to provide for tuning the outer coaxial line for maximum output at each test frequency The allowable travel of this short shall be greater than 1/2 wave length at the lowest test frequency of 1 5 meters minimum for 100 MHz The inner coaxial line shall be terminated in a fixed 50-ohms load impedance behind the connector at the output end of the fixture

c The connectors used to couple together the various elements of the test system shall be of a low-leakage type which have a nominal impedance of 50 ohms, a VSWR of less than 1 5, and a minimum leakage attenuation of 100 dB The output impedance of the signal source and the input impedance of the detector shall be nominally 50 ohms with a maximum VSWR of 1 5 The input and output VSWR of the standard attenuator shall be less than 1 5 in the 20 to 100 dB range

d The relative signal level in the variable attenuator shall be equaled to the signal level through the leakage fixture by adjusting the attenuator The signal loss in the fixture can then be read from the setting on the variable attenuator

Source: https://assist.dla.mil -- Downloaded: 2016-11-16T13:24Z
Check the source to verify that this is the current version before use.

4 7 27.2 EMI shielding (from 1,000 to 10,000 MHz) The EMI shielding effectiveness of mated connectors with EMI backshells shall be measured using the mode-stirred technique specified in method 3008 of MIL-STD-1344

4.7.28 Ozone exposure (see 3.32) Wired, mated connectors shall be subjected to the test specified in method 1007 of MIL-STD-1344.

4 7 29 Fluid immersion (see 3.33). Connector samples shall be subjected to the test specified in method 1016 of MIL-STD-1344 (one sample per fluid). Following the fluid immersion cycles, the connectors shall be tested for coupling torque as specified in 4.7.6 and dielectric withstanding voltage at sea level as specified in 4 7 10 1 within 3 hours. Samples shall be subjected to the fluids specified in method 1016 of MIL-STD-1344 as shown in table XVII

TABLE XVII Test fluids

Sample number	Test fluid (method 1016 of MIL-STD-1344)
1	d
2	e
3	a
4	b
5	f
6	g
7	c
8	l
9	h
10	i
11	j
12	k

4 7 29.1 Retention system fluid immersion (see 3.33 1) Unmated connectors with contacts removed shall be immersed in the fluids listed in table XVII (one sample per fluid) for 2 hours at room temperature. After removal, excess fluid shall drain from the connectors for 4 hours and the contacts reinstalled Following the test, the connectors shall be subjected to contact retention as specified in 4 7 19

4 7 30 Pin contact stability (see 3.34). The unmated connectors shall have 10 percent of their pin contacts subjected to this test Gauge pins conforming dimensionally to figure 15 shall be used The connector shall be held in a holding device The forces specified in table VIII shall be applied to the exposed rod as shown on figure 25 The load shall be applied gradually at a rate not exceeding 1 inch (25 4 mm) per minute The total pin tip displacement shall be measured as shown on figure 25

4 7 31 Contact walkout (see 3 35) Two contacts in each plug and receptacle shall be tested The contacts shall be crimped to stranded steel cable of an appropriate size and installed in the connector The unmated connector shall be mounted in a test fixture as shown on figure 26 A 3-pound load shall be applied to the cable One 360° rotation of the fixture with the connector mounted shall constitute one cycle The connector shall be subjected to 100 cycles at a rate of 10 to 20 cycles per minute

Source: https://assist.dla.mil -- Downloaded: 2016-11-16T13:24Z
Check the source to verify that this is the current version before use.

4.7.32 Installing/removal tool abuse (qualification only)(see 3.36). Five contact cavities in each connector shall be subjected to each of the following tests Different contact cavities shall be used for each test. Should a tool become damaged during any of the testing, it shall be replaced Failure of a tool shall not constitute a test failure. Tools shall be used in accordance with MIL-I-81969/14

4 7 32.1 Removal tool rotation. The tool shall be inserted as if to remove a contact and a total of 3 pounds axial load shall be applied. With the force applied, the tool shall be rotated 180° and then removed also removing the contact The contact shall be reinserted The steps shall be repeated three times on each of five contacts selected

4 7.33 High temperature exposure

4 7.33.1 High temperature exposure with contact loading (see 3.37 1) Connectors with removable contacts shall have one mating pair of contacts removed from an untested contact cavity and replaced with contacts crimped or otherwise attached to steel cable or steelcored copper wire (copper-weld, or equivalent) of an appropriate size The axial location of these contacts shall be measured for conformance to the applicable dimensions of figure 1, 2, 3, or 4, as applicable, with a load of approximately 2 pounds applied to seat the contact back against the retention device The connector shall then be mounted in a fixture equivalent to that shown on figure 27. A weight equal to 50 percent of the axial load specified in table XVI for the applicable contact size shall be suspended freely from each steel wire A current of 100 milliamperes maximum shall be applied to the test contacts and a suitable instrument shall be used to monitor the circuit for discontinuities in excess of 1 microsecond The mounted connector shall then be exposed to 150°C for finish A of series I and II, 175°C for finish B of series I and II, and classes J and W of series III and IV, and 200°C for all other finishes and classes for 1,000 hours minimum After the connectors return to ambient temperature, they shall be unmated and the contact locations remeasured with approximately 2 pounds axial load applied to seat the contact back against the retention device

4 7 33.2 High temperature exposure (series III, except hermetics) (see 3 37.2) Mated connectors shall be subjected to an ambient temperature of 175°C +3°C, -0°C for classes J and W, and 200°C +3°C, -0°C for all others The temperature shall be maintained for 1,000 hours

4 7.34 Electrolytic erosion (series III and IV) (see 3.38). The wired receptacle half of the connector containing the pin contacts shall be firmly mounted in a vertical position, pins facing up A salt-water solution (5 percent salt by weight) shall be poured onto the pin interface until the solution level just reaches the pin tips. The solution shall remain in the connector for a minimum of 30 seconds and then poured out, lightly shaking excesses from the connector The counterpart plug shall immediately be mated with the receptacle One cell pattern, with all contacts adjacent to a central contact at a positive polarity and the center contact at a negative polarity, shall be set up at a location giving the most uniform distribution of contacts adjacent to the center contact A potential of 60 volts dc shall be applied between the contacts adjacent to the center contact The contacts shall be energized for 40 hours Following this, with the voltage disconnected, the connectors shall be unmated and the pin contacts removed (except for hermetics) The contacts shall be examined using 3X magnification for erosion to base metal

Source: https://assist.dla.mil -- Downloaded: 2016-11-16T13:24Z
Check the source to verify that this is the current version before use.

4 7 35 Firewall (classes K and S connectors) (see 3 39). The mated, torqued, and wired connectors shall be subjected to the test specified in method 1009 of MIL-STD-1344 The following detail and exception shall apply

Wire bundles to be clamped to fixed points at least 8 inches (203 2 mm) behind the connector

4 7 36 Contact plating thickness (hermetic) (see 3 40) Contact plating thickness shall be measured in accordance with MIL-G-45204

4 7 37 Contact engagement and separating force (hermetic sockets only) (see 3 41) Contact engagement and separating force shall be measured as specified in MIL-C-39029

4 7 38 Resistance to probe damage (hermetic sockets only) (see 3.42) Resistance to probe damage shall be performed as specified in MIL-C-39029 except contacts shall be installed in connector

4 7.39 Ice resistance series I, III, and IV (see 3 45) Mated connectors shall be immersed in tap water for 1 minute and then placed in an ambience of -65°C for 1 hour A minimum of three such cycles shall be performed until the connector surfaces are completely iced over Immediately after removal from the last cycle, the frozen connectors shall be uncoupled and then recoupled The connectors shall be uncoupled and recoupled a second time with the uncoupling and coupling torque measured in accordance with 4 7 6 The uncoupling and coupling torque shall not be measured on the first uncoupling and recoupling

4 7 40 Dust (fine sand) series I, III, and IV (see 3 46) Mated connectors shall be subjected to the sand and dust test of method 110 of MIL-STD-202

4 7 41 Magnetic permeability (see 3.3 4). Connectors shall be tested as specified in method 3006 of MIL-STD-1344

4 7 42 Post test examination The tested connectors and contacts shall be examined for compliance with 3 43 and 3 44 to determine the effects of previous testing Any evidence of cracking, loosening of parts, carbon tracking, excess wear, or missing parts shall be recorded.

4 7 43 Thermal vacuum outgassing (classes G and H qualification only)(see 3 47) All materials used in the finished connector shall be tested in accordance with ASTM E595-84 Samples to be tested shall have been processed in the same manner as that used in production of the qualification lot

4 7 44 Hydrolytic stability (classes J and M)(see 3 48) Mated connectors with contacts and sealing plugs installed shall be subjected to the following water absorption test

4 7 44 1 Hydrolytic stability (initial qualification) The connectors shall be subjected to the test as specified in ASTM D570-81 for long-term immersion

4 7 44 2 Hydrolytic stability (periodic inspection) The connectors shall be subjected to the test as specified in ASTM D570-81 for boiling water immersion

4 7 45 Insert grommet bonding (see 3 49) The insert assemblies shall be placed in a circulating air oven for a minimum period of 100 hours The ambient temperature of the air circulating past the assemblies shall be 200 +3, -0°C At the end of this conditioning period the bonded assemblies shall be cooled to room temperature and the resilient grommets and interfacial seal shall be pulled or torn from the hard dielectric disk The assemblies shall meet the requirements of 3 49

Source: https://assist.dla.mil -- Downloaded: 2016-11-16T13:24Z
Check the source to verify that this is the current version before use.

4 7 46 Impact (classes J and M) (see 3.50) Connectors plugs with MIL-C-85049 straight strain relief clamps shall be tested as specified in method 2015 of MIL-STD-1344 The following conditions apply

a Drop height shall be 4 feet (1 829).
b Number of drops shall be 8
c Plate shall be indexed at 36° intervals
d Plugs shall have no caps or covers installed.

5 PACKAGING

5 1 Packaging requirements The requirements for packaging shall be in accordance with MIL-C-55330

Dust caps Dust caps in accordance with MS90376 (or equivalent cap) shall be placed on the mating end of each connector For RFI connectors, dust caps must be assembled externally over the coupling ring Hermetic connectors require caps on both ends In lieu of dust caps on both ends, hermetic receptacles may be packaged in rigid or semi-rigid containers designed to prevent damage to the termination end of the connector

6 NOTES

(This section contains information of a general or explanatory nature that may be helpful, but is not mandatory)

6 1 Intended use The various configuration of the connectors are intended for use as follows.

a Series I connectors General application within weapon system where a quick disconnect coupling system is required for blind mating or other mating problem areas These connectors provide high-vibration characteristics and are suitable for severe wind and moisture problem (SWAMP) areas with proper connector accessories.

Class G, finish F - Provides a conductive shell for EMI considerations but with additional requirements for space grade applications

Class H, - Same as class Y but with additional requirements for space grade applications

Class T, finish F - Provides a conductive shell for EMI considerations

Class Y - Applications where pressure must be maintained

b Series II connectors. General application within weapon systems which are not subjected to high vibration or SWAMP areas These connectors are not scoop proof (see 6 1 1) Connectors are light weight

Source: https://assist.dla.mil -- Downloaded: 2016-11-16T13:24Z
Check the source to verify that this is the current version before use.

c Series III connectors General application within weapons systems and are suitable for blind mating areas. These connectors provide high-vibration characteristics at elevated temperature and are suitable for SWAMP areas with the proper connector accessories

Class W - Provides a corrosion resistance shell

Class F - Provides a conductive shell for EMI requirements.

Class K - Provides a stainless steel firewall connector for engine applications

Class S - Provides a stainless steel firewall connector with enhanced EMI performance

Class Y - Applications where pressure must be maintained.

Class J - Provides a corrosion resistant, lightweight composite shell with conductivity equivalent to class W

Class M - Provides a corrosion resistant, lightweight composite connector with conductive plating for EMI performance equivalent to class F.

Class G - Same as class F but additional requirements for space grade applications

Class H - Same as class Y but additional requirements for space grade applications

d. Series IV connectors. General application within weapons systems where a quick disconnect coupling system is required for blind mating or other mating problem areas These connectors provide high-vibration characteristics and are suitable for SWAMP areas with the proper connector accessories.

Classes W, F, G, H, J, M, and Y - Same as for series III.

e Series I and II are intermateable with series I and II respectively of MIL-C-27599.

6 1 1 Application guidance

a Users of connectors, covered by this specification, in new design systems and support equipment are advised to evaluate carefully for each application the relative merits of the long shell series I, III, IV, and short shell series II connectors. When considering use of the short shell series II connectors, the following areas must be evaluated:

(1) Series II connectors are vulnerable to pin contact bending from scooping, with contact size 22 being the most vulnerable.

(2) Use of series II connectors should be avoided in areas of blind mating

(3) Receptacles should be located so as to minimize the amount of required cable bending When using series II connectors with large cables which must be bent at right angles, the cables must have the right angle bend permanently established.

(4) Series II connector should not be used with heavy jacketed cable and excessive overhang moments, because of possible shell damage

(5) Series II connectors should not be used in areas of rough handling such as experienced near engine removal, generators, support equipment, or portable equipment, etc

Source: https://assist.dla.mil -- Downloaded: 2016-11-16T13:24Z
Check the source to verify that this is the current version before use.

(6) When mating series II connectors in areas of difficult visibility, care must be exercised to make sure that all bayonet pins are engaged by the coupling ring, since it is possible to engage only one bayonet pin and therefore only partially couple

(7) When mating series II connectors in areas of difficult visibility, care must be exercised to make sure that connector plugs with pins are not coupled to receptacles with pins This situation will result in the contacts touching

b When the use of series IV connectors are considered, the design of the coupling system should be evaluated If the coupling mechanism between the coupling ring and the shell is not properly positioned prior to the mating operation, the coupling ring must be repositioned prior to mating.

c Class P connectors shall not be used in Air Force new design applications, except when specifically approved by the procuring activity

d Application restrictions concerning the use of these connectors are set forth in MIL-STD-1353

e Recommended panel cutout dimensions are shown on figure 28

f The intermating of composite connectors to metal shell connectors or accessories should be restricted until the completion of an evaluation which indicates acceptability Compatibility of connectors should be addressed when intermating different classes

6 2 Ordering data Procurement documents should specify the following

a Title number and date of this specification

b Nomenclature by class, type, finish, style, size, and part number (see 1 3 1 and 3 43)

c Whether contacts, sealing plugs, and tools are included (see 1 3 1e, 3 4 1, 3 4 1 2, 3 4 1 4, and 3 4 3 2)

6 3 Qualification With respect to products requiring qualification, awards will be made only for products which are at the time set for opening of bids, qualified for inclusion in applicable qualified products list (QPL) whether or not such products have actually been so listed by that date The attention of the contractors is called to this requirement, and manufacturers are urged to arrange to have products that they propose to offer to the Federal Government tested for qualification in order that they may be eligible to be awarded contracts or orders for the products covered by this specification For series I, II, and III, the activity responsible for the qualified products list is the 2750 Air Base Wing, Electronic Support Division (2750 ABW/ES), Gentile AFS, Dayton, Ohio 45444-5400 For Series IV the activity responsible for the qualified product list is Naval Air Systems Command (AIR-546D4), Washington, DC 20361-5460

6 3 1 Qualification activities Unless otherwise notified, information pertaining to the qualification of products may be obtained from the following agencies

a For series I, II, and III metal connectors

Defense Electronics Supply Center
Desc-E
Dayton OH 45444-5270

Source: https://assist.dla.mil -- Downloaded: 2016-11-16T13:24Z
Check the source to verify that this is the current version before use.

b For all composite class connectors

1) Initial qualification and requalification

Naval Avionics Center
B/444
6000 E 21st Street
Indianapolis, Indiana 46219-2189

2) Plant audits, retention of qualification, and design changes

Defense Electronics Supply Center
DESC-E
Dayton, OH 45444-5270

c For series IV connectors

Naval Avionics Center
B/444
6000 E 21st Street
Indianapolis, Indiana 46219-2189

6 3 2 Copies of "Provisions Governing Qualification SD-6" Copies of "Provisions Governing Qualification SD-6" may be obtained upon application to Commanding Officer, Naval Publications and Forms Center, 5801 Tabor Avenue, Philadelphia, PA 19120

6 4 Definitions

Blind-mate A situation in which personnel wishing to mate a connector can neither see nor touch the connector halves being mated and must rely on some mechanism to accomplish the mating

Scoop-proof Scoop-proof means that because of the connector long shell design, it is impossible for the mating plug connector to inadvertently be cocked into the mating receptacle and damage the pins or electrically short the contacts.

6 5 Applicable contacts

MIL-C-39029

	Power	Shielded/coax	Twinax	Thermocouple	Wirewrap
Pin	/58, /107 1/	/28, /60, /76, /102	/90	/87	/71
Socket	/56, /57, /106 1/	/27, /59, /75, /77, /78, /103	/91	/88, /89	/72

1/ 1,500 cycles durability contacts

Source: https://assist.dla.mil -- Downloaded: 2016-11-16T13:24Z
Check the source to verify that this is the current version before use.

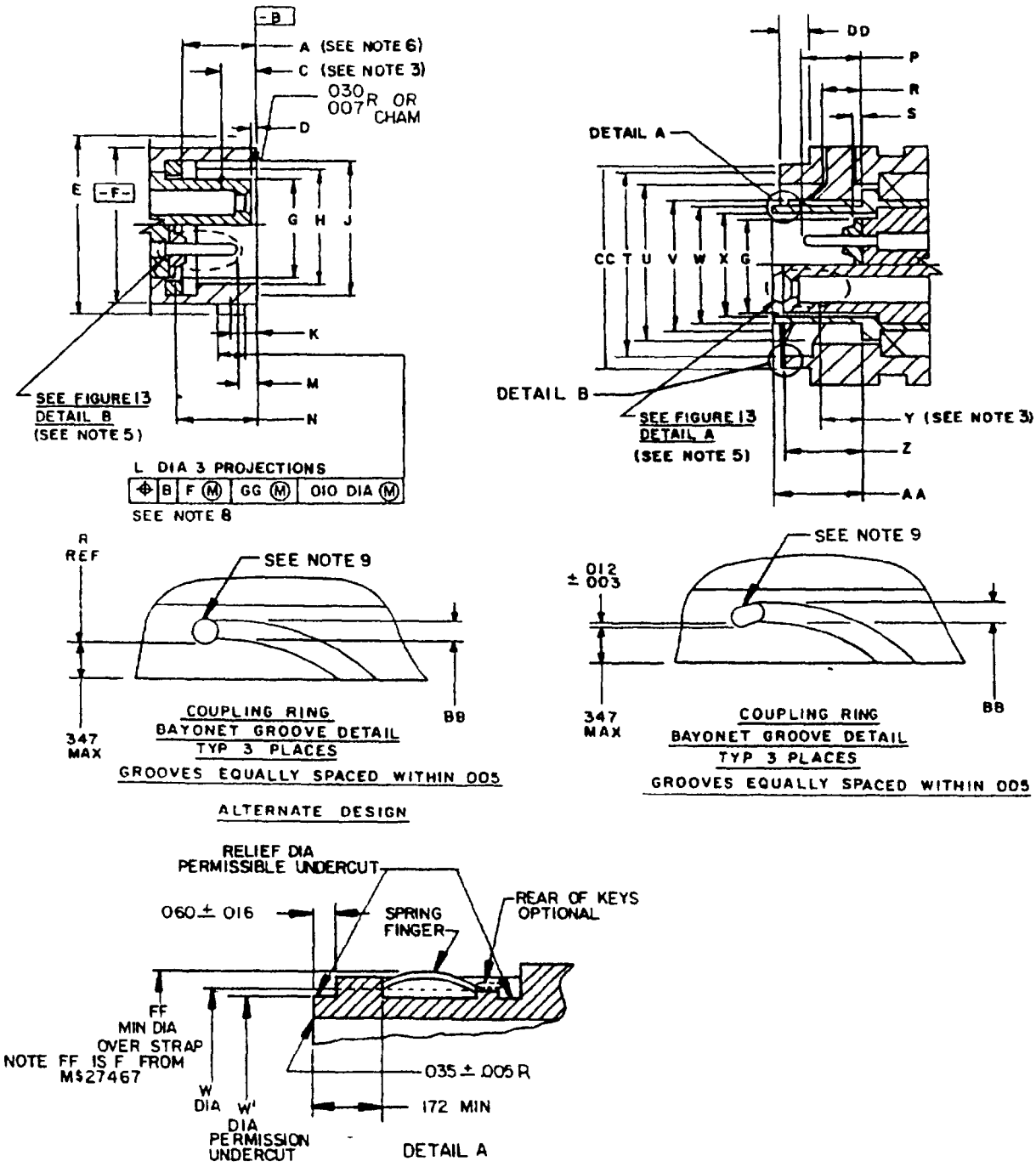

FIGURE 1 Connector intermateability dimensions (series I).

Source: https://assist.dla.mil -- Downloaded: 2016-11-16T13:24Z
Check the source to verify that this is the current version before use.

Shell size	A gask loc	C see note 1	D soc ins loc	E dia + 000 +.016	F dia + 001 -.005	G dia + 005 - 010	H dia + 005 -.001	J dia + 005 - 006	K bay loc BSC	L dia + 006 - 002	M pin cont loc	N pin ins loc
9				.662	572	285	.442	492				
11				.810	.700	.413	.570	.620				
13				.960	.850	.527	.687	.769				
15	569	.111	.023	1.085	.975	.652	.812	.894	100	.078	.404	.579
17	.553	max	015	1 210	1 100	.777	.937	1 019			368	.566
19				1.317	1 207	866	1.042	1 124				
21				1.442	1 332	.991	1 167	1 249				
23				1.567	1.457	1.116	1.292	1.374				
25				1.692	1 582	1 241	1.417	1.499	.109	125		

NOTES

1 Dimensions are in inches
2 Metric equivalents are given for general information only.
3 A point at which a gauge pin, having the same basic diameter as the mating contact and a square face touches socket contact spring.
4 Distance from plug shell shoulder to locking point of coupling ring
5 Details "A" and "B" apply to both plugs and receptacles
6 "A" initial contact with static seal.
7 The least amount of electrical engagement occurs when the insert faces are at their minimum interference location When this condition exists, the coupling spring force shall be sufficient to guarantee 024 inch (0 61 mm) compression of the peripheral sealing gasket Minimum electrical contact engagement is therefore computed with the peripheral sealing gasket compressed .024 inch (0.61 mm) from its MMC position
8 The gauge features for GG (see main key/keyway polarization detail of figure 5) shall be 010 smaller than their MMC at basic location (see applicable MS standards)
9 Three holes (design optional) equally spaced within .010 inch (0 25 mm) shall be provided for visual inspection of lock when mated with receptacle
10 Insert front surface shall be flat within .005 inch (0.13 mm) TIR
11 Diameters F and H shall be concentric within 015 inch (0 38 mm) TIR
12 Diameter F with respect to diameter E and diameter H with respect to diameter J shall be concentric at MMC.
13 Diameters H and G shall be concentric within 005 inch (0.13 mm) TIR at MMC
14 Diameter W with respect to diameter V shall be concentric at MMC
15 Diameters U and T shall be concentric within 008 inch (0 20 mm) TIR
16 Diameter CC to be concentric to U within 005 inch (0.13 mm) TIR

FIGURE 1 Connector intermateability dimensions (series I) - Continued

Source: https://assist.dla.mil -- Downloaded: 2016-11-16T13:24Z
Check the source to verify that this is the current version before use.

Shell size	P pin cont log	R see note 4	S pin ins loc	T dia + 005 - 006	U dia + 005 -.001	V dia + 001 - 010	W dia + 001 - 005	W' dia min	X dia min	Y see note 3	Z soc ins loc	AA shld loc	BB + 016 - 001	CC dia + 011 - 000	DD +.045 - 036	B +.005 - 001	EE + 005 -.006	FF dia min
9				674	580	482	437	417	312					780		.684	068	447
11				822	712	610	565	545	430					905		832	+ 068	575
13				972	861	759	677	.657	544					1 061		981	068	692
15	228	133	031	1 097	985	884	802	782	669	483	582	.597	090	1 186	.160	1 106	068	817
17	190	093	016	1 222	1 110	1 009	927	907	794	min	572	.592		1 301		1 230	068	942
19				1 329	1.217	1 114	1 032	1.012	.883					1 422		1.347	068	1 047
21				1 454	1 342	1 239	1 157	1 137	1 008					1 544		1 462	068	1 172
23				1 579	1 467	1 364	1 282	1 262	1 133					1 667		1.587	068	1 297
25		172 132		1 704	1 592	1 489	1.407	1.387	1 257				.137	1 793		1 712	047	1 422

FIGURE 1 Connector intermateability dimensions (series I) - Continued

Source: https://assist.dla.mil -- Downloaded: 2016-11-16T13:24Z
Check the source to verify that this is the current version before use.

Inches	mm	Inches	mm	Inches	mm	Inches	mm	Inches	mm
001	0.03	190	4 83	662	16.81	.981	24.92	1.262	32 05
002	0 05	.228	5 79	.672	17 07	.985	25 02	1 282	32 56
003	0 08	285	7 24	674	17 12	991	25.17	1.292	32 82
004	0 10	315	8 00	677	17 20	1 009	25 63	1 297	32 99
005	0 13	347	8 81	684	17 37	1 011	25 68	1 301	33 05
006	0 15	368	9 35	687	17 45	1 012	25 70	1 317	33.45
007	0 18	404	10.26	692	17 58	1 019	25.88	1.329	33 76
008	0 20	413	10.49	700	17.78	1.032	26.21	1.332	33.83
010	0 25	417	10.59	712	18.08	1 042	26.47	1 342	34 09
011	0 28	433-	11 00	759	19 28	1 047	26.59	1.347	34 21
012	0 30	437	11 10	769	19 53	1.061	26.95	1 364	34 65
015	0 38	442	11 23	777	19 74	1 085	27.56	1.374	34 90
016	0 41	447	11 35	.780	19 81	1.097	27.86	1 387	35.23
023	0 58	482	12 24	782	19 86	1 100	27.94	1 407	35 74
024	0 61	483	12 27	797	20 24	1 106	28.09	1 417	35 99
030	0 76	492	12 50	802	20 37	1 110	28 19	1 422	36.12
031	0.79	527	13.39	810	20 57	1 114	28 30	1 442	36 63
035	0 89	.545	13.84	812	20 62	1 116	28 35	1 454	36 93
036	0 91	547	13 89	.817	20 75	1.124	28.55	1.457	37.01
045	1 14	.553	14 05	822	20.88	1 136	28 85	1 462	37 13
047	1 19	565	14 35	832	21.13	1.137	28 88	1 467	37 26
060	1 52	.566	14.38	850	21 59	1 157	29.39	1 489	37 82
068	1 73	.569	14 45	861	21 87	1 167	29 64	1 499	38.07
.078	1 98	.570	14 48	866	22 00	1 172	29 77	1 544	39.22
090	2 29	572	14 53	.884	22 45	1 186	30 12	1 567	39 22
093	2 36	.575	14 61	886	22 50	1 207	30 66	1 579	40 11
100	2 54	579	14 71	894	22 71	1 210	30 73	1 582	40 18
109	2 77	580	14 73	905	22.99	1 217	30 91	1 587	40 31
111	2 82	582	14 78	907	23 04	1 222	31 04	1 592	40 44
125	3 18	592	15 04	927	23 55	1 230	31 24	1 667	42 34
132	3 35	597	15 16	937	23 80	1 239	31 47	1 692	42 98
133	3 38	610	15.49	.942	23 93	1.241	31.52	1 704	43 28
137	3 48	.620	15 75	960	24.38	1 249	31 72	1 712	43 48
160	4 06	652	16 56	972	24 69	1 260	32 00	1 793	45 54
172	4 37	657	16 69	975	24 77				

FIGURE 1 Connector intermateability dimensions (series I) - Continued

Source: https://assist.dla.mil -- Downloaded: 2016-11-16T13:24Z
Check the source to verify that this is the current version before use.

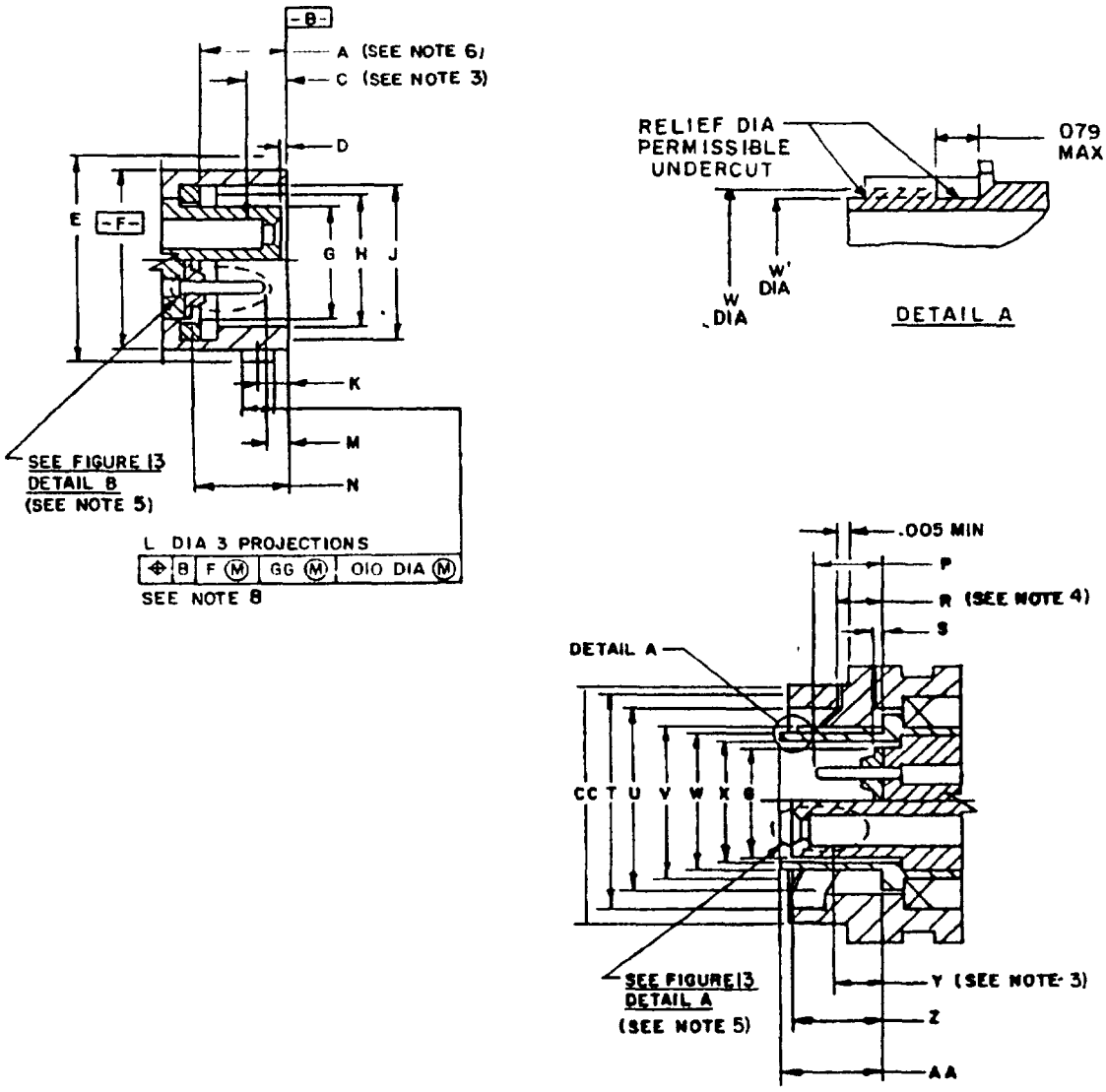

FIGURE 2. Connector intermateability dimensions (series II).

Source: https://assist.dla.mil -- Downloaded: 2016-11-16T13:24Z
Check the source to verify that this is the current version before use.

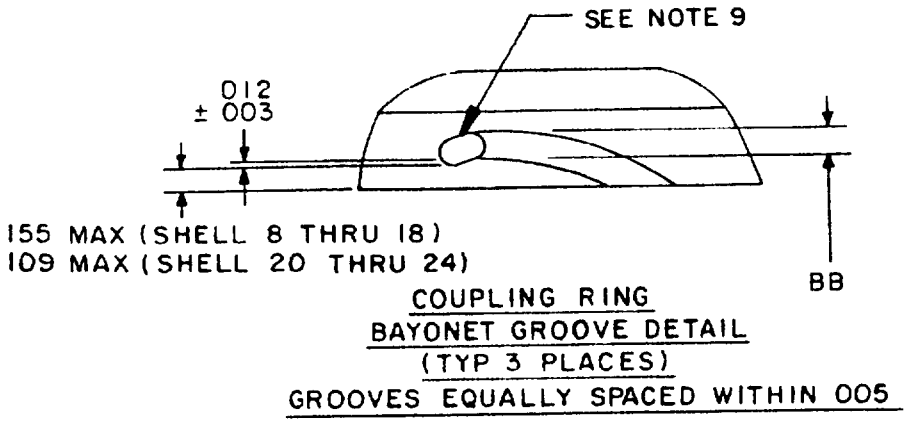

NOTES

1 Dimensions are in inches
2 Metric equivalents are given for general information only
3 A point at which a gauge pin, having the same basic diameter as the mating contact and a square face, touches socket contact spring
4 Distance from plug shell shoulder to locking point of coupling ring.
5 Details "A" and "B" apply to both plugs and receptacles
6 "A" initial contact with static seal
7 The least amount of electrical engagement occurs when the insert faces are at their minimum interference location. When this condition exists, the coupling spring force shall be sufficient to guarantee .024 inch (0.61 mm) compression of the peripheral sealing gasket Minimum electrical contact engagement is therefore computed with the peripheral sealing gasket compressed 024 inch (0 61 mm) from its MMC position
8 The gauge features for GG (see figure 5) shall be 004 inch (0 10 mm) smaller for shell size 8 and 010 inch (0 25 mm) smaller for shell sizes 10 through 24 at MMC (see applicable MS standard for projection location)
9 Three holes (design optional) equally spaced within 010 inch (0 25 mm) shall be provided for visual inspection of lock when mated with receptacle
10 Insert front surface shall be flat within 005 inch (0.13 mm) TIR
11 Diameters F and H shall be concentric within 015 inch (0 38 mm) TIR
12 Diameter F with respect to diameter E and diameter H with respect to diameter J shall be concentric at MMC
13 Diameters H and G shall be concentric with 005 inch (0 13 mm) TIR at MMC
14 Diameter W with respect to diameter V shall be concentric at MMC
15 Diameters U and T shall be concentric with 008 inch (0.20 mm) TIR
16 Diameter CC to be concentric to U within .005 (0.13 mm) TIR.

FIGURE 2 Connector intermateability dimensions (series II) - Continued

Source: https://assist.dla.mil -- Downloaded: 2016-11-16T13:24Z
Check the source to verify that this is the current version before use.

Shell size	A gask loc	C see note 3	D soc ins loc	E dia + 000 - 016	F dia + 001 - 005	G dia + 005 - 010	H dia + 005 - 001	J dia + 005 - 006	K bay loc BSC	L dia + 006 - 002	M pin cont loc	N pin ins loc	P pin cont loc
8				563	473	285	362	412					
10				680	.590	.413	490	.540					
12				859	750	527	607	689					
14	.232	111	023	.984	.875	.652	.732	814			067	.241	.228
16	216	Max	015	1 108	1 000	777	857	939	078	078	031	228	190
18				1 233	1 125	.866	962	1 039					
20				1 358	1 250	991	1 087	1 164					
22				1 483	1 375	1 116	1 212	1 289		125			
24				1 610	1 500	1 241	1 337	1 414					

Shell size	R see note 4	S pin ins loc	T dia - 005 - 006	U dia +.005 - 001	V dia +.001 - 005	W dia +.001 - 005	W' DIA min	X dia min	Y see note 3	Z soc ins loc	AA shld loc	BB + 015 - 001	CC dia + 000 - 006
8			576	.481	402	.357	.337	.306					630
10			697	602	530	485	465	423					752
12			871	761	679	.597	557	537					925
14	116	031	995	885	804	.722	702	.662	146	244	260	090	1 050
16	076	016	1 120	1 010	.929	.847	.827	787	min	.234	256		1 172
18			1 245	1 136	1 029	947	927	876					1 304
20			1.370	1 260	1 154	1 072	1.052	1.001					1 435
22	143		1 495	1 385	1 279	1 197	1 177	1 126				137	1 560
24	103		1 624	1 510	1 404	1.322	1 302	1 251					1 688

FIGURE 2 Connector intermateability dimensions (series II) - Continued

Source: https://assist.dla.mil -- Downloaded: 2016-11-16T13:24Z
Check the source to verify that this is the current version before use.

Inches	mm	Inches	mm	Inches	mm	Inches	mm	Inches	mm
001	0 03	234	5 94	607	15 42	927	23 55	1.212	30 78
002	0 05	241	6 12	630	16 00	929	23 60	1 233	31 32
003	0 08	244	6 20	652	16 56	.939	23.85	1.241	31 52
005	0 13	256	6.50	662	16.81	.947	24.05	1.245	31 62
006	0 15	260	6 60	679	17 25	962	24 43	1 250	31 75
010	0 25	285	7 24	680	17 27	984	24 99	1.251	31 78
012	0 30	306	7 77	689	17 50	991	25.17	1.260	32.00
015	0 38	337	8 56	697	17 70	.995	25 27	1.279	32.49
016	0 41	357	9.07	702	17 83	1 000	25 40	1 289	32.74
023	0 58	362	9.19	722	18.34	1 001	25.43	1.302	33 07
031	0 79	402	10 21	732	18 59	1 010	25.65	1.304	33 12
067	1 70	412	10 46	750	19 05	1 029	26 14	1.322	33.58
076	1 93	413	10 49	752	19 10	1 039	26 39	1 337	33.96
078	1 98	423	10 74	761	19 33	1.050	26 67	1 358	34 49
079	2 01	465	11 81	777	19 74	1.052	26.72	1.370	34.80
090	2 29	473	12 01	.787	19.99	1 072	27.23	1.375	34 93
103	2.62	.481	12 22	804	20 42	1 087	27 61	1.385	35 18
109	2 77	485	12.32	814	20 68	1 108	28.14	1.404	35 66
111	2.82	.490	12 45	.827	21.01	1 116	28.35	1.414	35 92
116	2 95	.527	13 39	.847	21 51	1.120	28.45	1.435	36 45
125	3 18	530	13 46	857	21 77	1 125	28 58	1.483	37 67
137	3 48	537	13 64	859	21 82	1 126	28 60	1 495	37 97
143	3 63	540	13 72	866	22 00	1 136	28 85	1 500	38 10
146	3 71	.557	14 15	.871	22 12	1 154	29.31	1.510	38 35
155	3 94	563	14 30	875	22 23	1 164	29 57	1 560	39 62
190	4 83	576	14 63	876	22 25	1 172	29 77	1 610	40 89
216	5 49	590	14 99	885	22 48	1 177	29 90	1 624	41 25
228	5 79	597	15.16	925	23 50	1 197	30 40	1.688	42.88
232	5 89	602	15 29						

FIGURE 2 Connector intermateability dimensions (series II) - Continued

Source: https://assist.dla.mil -- Downloaded: 2016-11-16T13:24Z
Check the source to verify that this is the current version before use.

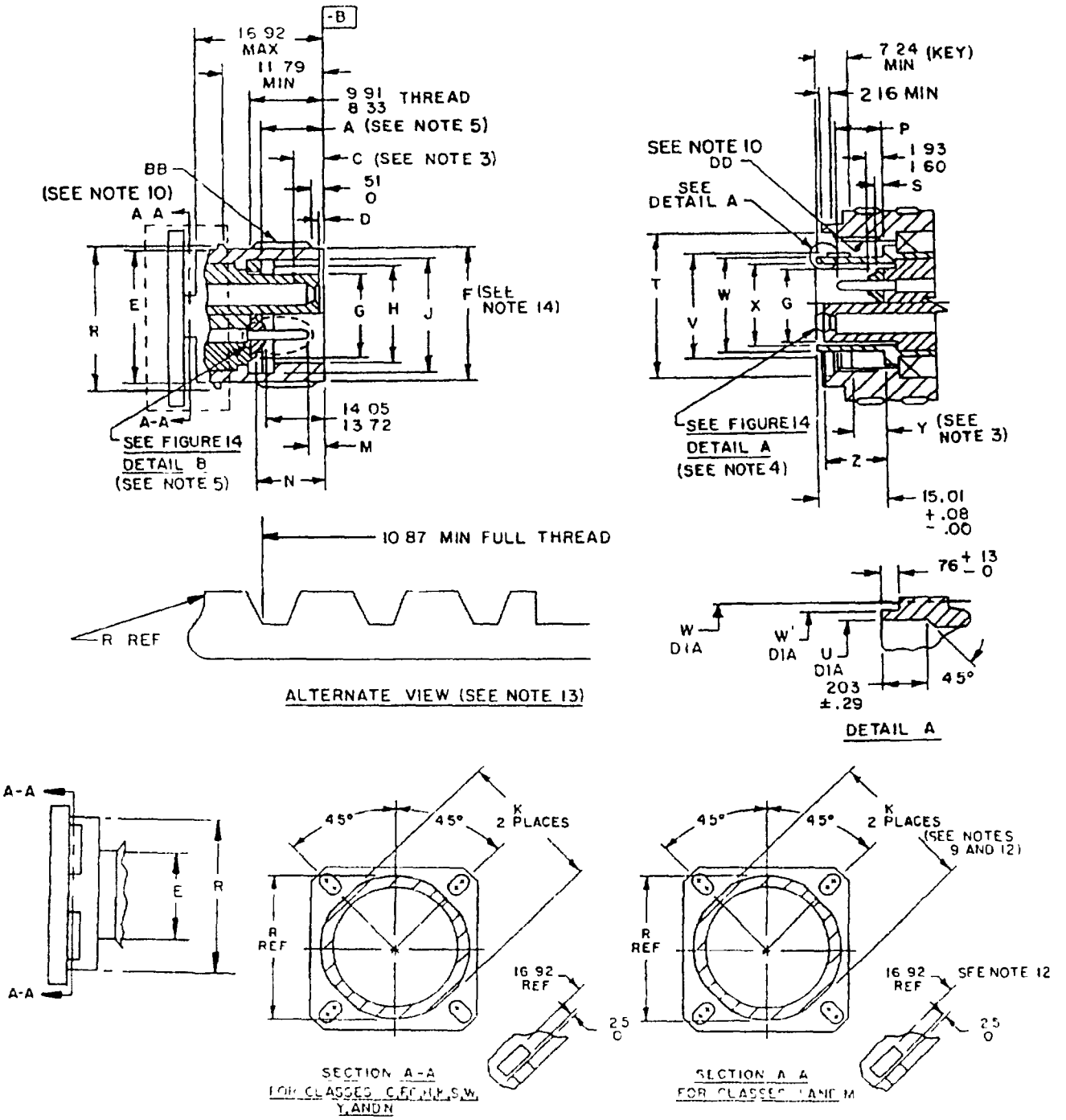

FIGURE 3 Connector intermateability dimensions (series III).

Source: https://assist.dla.mil -- Downloaded: 2016-11-16T13:24Z
Check the source to verify that this is the current version before use.

NOTES:

1. Dimensions are in millimeters (except coupling threads).
2. Inch equivalents are given for general information only.
3. A point at which a gauge pin, having the same basic diameter as the mating contact and and a square face, touches socket contact spring.
4. Details "A" and "B" apply to both plugs and receptacles.
5. "A" initial contact with static seal.
6. Insert front surface shall be flat within .13 TIR.
7. Diameters H and G shall be concentric within .13 TIR at MMC.
8. Diameter W with respect to diameter V shall be concentric at MMC.
9. K dimension is for clearance of mounting screw heads.
10. Thread approach modified to eliminate cross-threading.
11. Receptacle coupling threads may have modified minor diameters.
12. Flycuts is a optional design for composite.
13. The E dimension does not apply.
14. Witness marks as result of threading are permissible on F diameter.

FIGURE 3. Connector intermateability dimensions (series III) - Continued.

Source: https://assist.dla.mil -- Downloaded: 2016-11-16T13:24Z
Check the source to verify that this is the current version before use.

Shell size	A gask loc	C see note 3	D soc ins loc	E dia max	F dia	G dia + 13 - 25	H dia	J dia	K max	M pin cont loc	N pin ins loc	P pin cont loc	R dia max	S pin ins loc	T dia + 25 - 03
9	14 73 14 50	3 25 max	0 87 0 71	14 55	14 42 14 14	7 24	11 36 11 20	12 63 12 34	11 84	10 54 9 50	15 37 15 04	8 15 5 11	15 88	0 61 0 28	16 51
11	. .	.		17 73	17 60 17 32	10 49	14 61 14 45	15 88 15 60	15 01			.	19 05	. .	19 69
13	. .			20 90	20 77 20 49	13 39	17 45 17 30	19 66 19 38	19 08	.	.	. .	22 23	. .	22 86
15	.			24 08	23 95 23 67	16 56	20 63 20 44	22 84 22 56	22 25	. .	.	.	25 40	. .	26 04
17	.		. .	28 52	28 30 27 97	19 74	23 80 23 64	26 01 25 73	25 43	. .	. .	. .	30 16	. .	30 89
19	.		.	30 12	29 89 29 56	22 00	26 47 26 31	28 63 28 40	28 60	. .	.	. .	31 75	. .	32 49
21	. .		.	33 30	33 07 32 74	25 17	29 64 29 49	31 85 31 57	31 78	. .	. .	.	34 73	. .	35 66
23	.		. .	36 47	36 24 35 91	28 35	32 82 32.66	35 03 34 75	34 95	. .	. .	. .	38 10	. .	38 84
25	.		.	39 65	39 42 39 09	31 52	35 99 35 84	38.20 37 92	38 13	. .	. .	. .	41 28	. .	42 01

FIGURE 3 Connector intermateability dimensions (series III) - Continued

Source: https://assist.dla.mil -- Downloaded: 2016-11-16T13:24Z
Check the source to verify that this is the current version before use.

Shell size	U dia +.13 -.03	V dia	W dia	W' dia min	X dia min	Y see note 3	Z soc insc loc
9	9 83	12 27 11 99	11 13 10 97	10 59	7 92	12 45 min	14 94 14 78
11	13 06	15 52 15.24	14 38 14 22	13.84	10 92	.	. .
13	15 95	19 31 19 02	17 22 17 07	16 68	13 81	.	.
15	19 13	22.48 22 20	20.40 20 24	19.86	16 99	.	.
17	22 30	25 66 25 37	23 57 23.42	23 03	20 16		.
19	24 69	28 32 28 04	26 24 26 09	25 70	22 42	.	. .
21	27 86	31.50 31 22	29 42 29 26	28.87	25.60		.
23	31 04	34 67 34 39	32 59 32 44	32 05	28 77	.	. .
25	34 21	37 85 37 57	35 77 35 61	35 22	31 92	.	.

FIGURE 3 Connector intermateability dimensions (series III) - Continued

Source: https://assist.dla.mil -- Downloaded: 2016-11-16T13:24Z
Check the source to verify that this is the current version before use.

BB thread (plated) 2/													
Shell size	Designation				External thread - limits of size - class 2A								
	Thread size	Pitch	Lead	Allowance 1/	Minor diameter			Pitch diameter			Major diameter		
					Limits		Tolerance	Limits		Tolerance	Limits		
					Min	Max		Max	Min		Min	Max	
9	6250	1	3	0015	5535	5675	0080	5975	5895	0080	5895	5975	
11	7500	1	3	0015	6785	6925	0080	7225	7145	0080	7145	7225	
13	8750	1	3	0015	8035	8175	0080	8475	8395	0080	8395	8475	
15	1 0000	1	3	0015	9285	9425	0080	9725	9645	0080	9645	9725	
17	1 1875	1	3	0020	1 0955	1 1135	0120	1 1515	1 1415	0100	1 1415	1.1515	
19	1 2500	1	3	0020	1 1580	1 1760	0120	1 2140	1 2040	.0100	1 2040	1 2140	
21	1 3750	1	3	0020	1 2830	1 3010	0120	1 3390	1 3290	0100	1 3290	1 3390	
23	1 5000	1	3	0020	1 4080	1 4260	0120	1 4640	1 4540	0100	1 4540	1 4640	
25	1 6250	1	3	0020	1 5330	1 5510	0120	1.5890	1 5790	0100	1 5790	1 5890	

DD thread (plated) 2/											
Shell size	Designation			External thread - limits of size - class 2A							
	Thread size	Pitch	Lead	Minor diameter			Pitch diameter			Major diameter	
				Limits		Tolerance	Limits		Tolerance	Limits	
				Min	Max		Max	Min		Min	Max
9	6250	1	3	5990	6090	0100	5990	6090	0100	6290	6450
11	7500	1	3	.7240	7340	0100	7240	7340	0100	7540	7700
13	8750	1	3	8490	8590	0100	8490	8590	0100	8790	8950
15	1 0000	1	3	9740	9840	0100	9740	.9840	.0100	1 0040	1 0200
17	1 1875	1	3	1 1535	1 1655	0120	1 1535	1 1655	0120	1 1915	1 2115
19	1 2500	1	3	1 2160	1 2280	0120	1 2160	1 2280	0120	1 2540	1 2740
21	1 3750	1	3	1 3410	1 3530	0120	1 3410	1 3530	0120	1 3790	1 3990
23	1 5000	1	3	1 4660	1 4780	0120	1 4660	1 4780	0120	1 5040	1 5240
25	1 6250	1	3	1 5910	1 6030	0120	1 5910	1 6030	0120	1 6290	1 6490

1/ Gauges for plated threads Maximum gauging limits of class 2A threads which are plated, are increased by the allowance

2/ Threads are modified 60° stub configuration

FIGURE 3 Connector intermateability dimensions (series III) - Continued

Source: https://assist.dla.mil -- Downloaded: 2016-11-16T13:24Z
Check the source to verify that this is the current version before use.

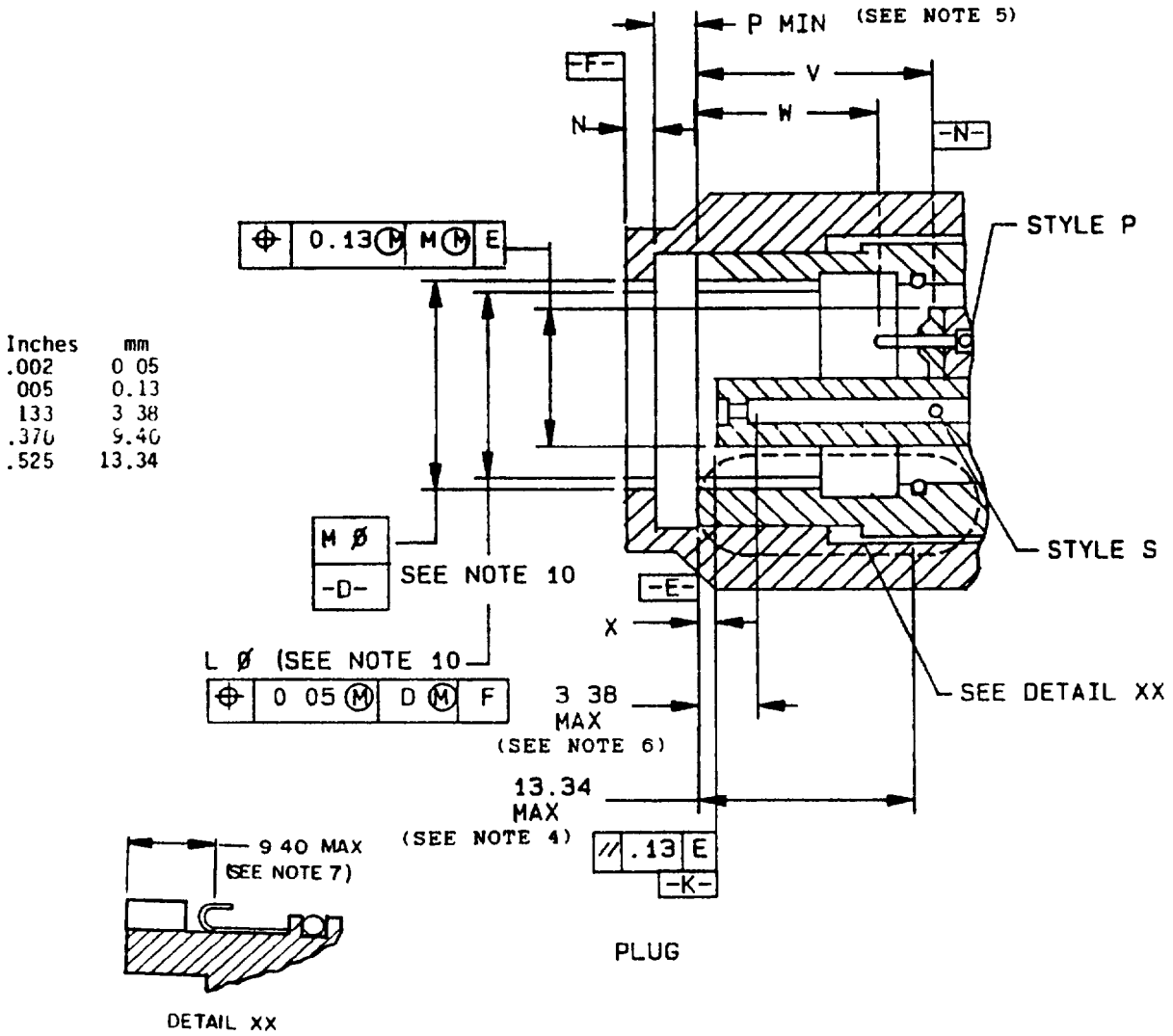

NOTE Detail XX applicable to EMI grounding plug only

FIGURE 4 Connector intermateability dimensions (series IV)

Source: https://assist.dla.mil -- Downloaded: 2016-11-16T13:24Z
Check the source to verify that this is the current version before use.

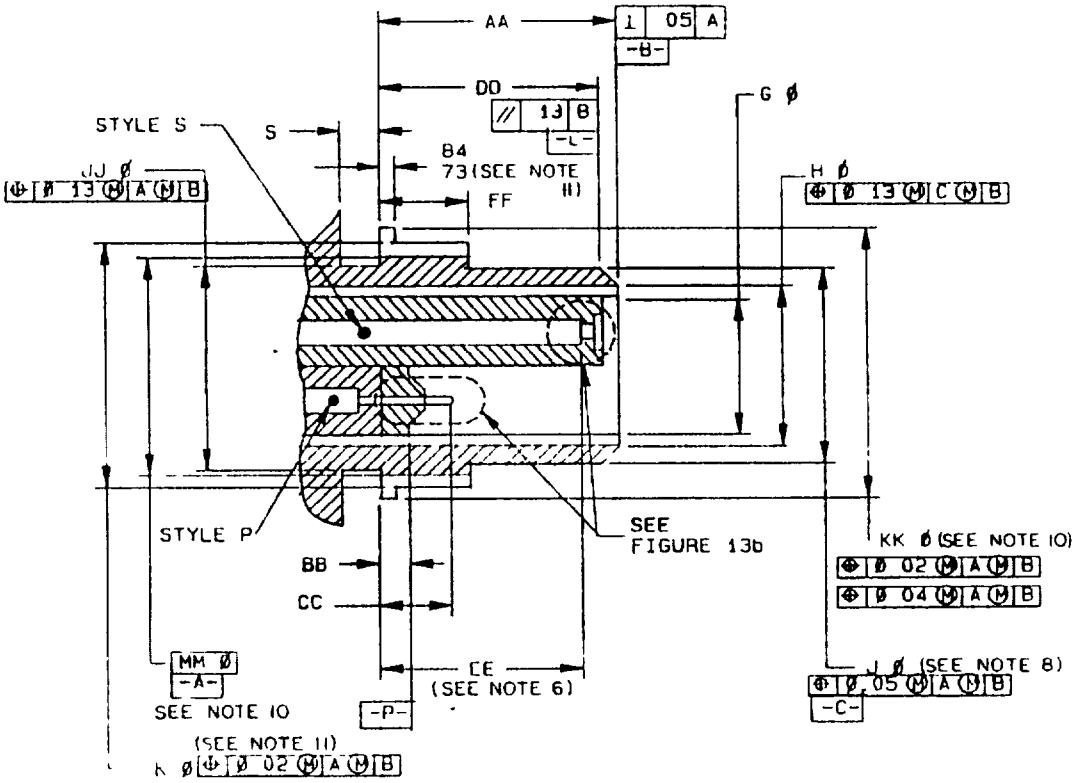

RECEPTACLE

mm	Inches
0 02	001
0 04	.002
0.05	.002
0 11	.004
0.13	.005
0.73	.029
0.84	.033

FIGURE 4 Connector intermateability dimensions (series IV) - Continued

Source: https://assist.dla.mil -- Downloaded: 2016-11-16T13:24Z
Check the source to verify that this is the current version before use.

Receptacle														
Shell size code 10	Shell size	AA	G dia	BB pin insr loc	CC pin cont loc	DD sht insr loc	EE min	FF	H dia min	J dia	JJ dia	S	K dia	KK dia
B	11		10 62 418) 10 36 (408)						10 74 (423)	12.93 (509) 12 77 (.503)	13 09 (515) 12.97 (.511)		14 99 (590) 14 89 (.503)	16.26 (640) 16 16 (636)
C	13	17 15 (675) 16 99 (669)	13 52 .532) 13 25	2.08 (082) 1 71 (067)	7 09 (.279) 6 12 (241)	16.03 (631) 15 81 (622)	13 46 (530)	7 02 (276) 6 85 (270)	13 63 (537)	16 10 (.634) 15 94 (628)	16 51 (650) 16 39 (645)	2 52 (099) 2 38 (.094)	18 32 (721) 18 22 (717)	19 33 (761) 19.23 (757)
D	15		16 69 657) 16.43 647)						16.81 (.662)	19 28 (759) 19.12 (.753)	19 69 (775) 19.57 (770)		21.47 (845) 21.37 (841)	22.48 (.885) 22.38 (.881)
E	17		19 87 782) 19 60 772)						19 98 (.787)	22 48 (885) 22 32 (879)	22 89 (901) 22 77 (896)		24 64 (970) 24 54 (966)	25 66 (1 010) 25 56 (1 006)
F	19		22 13 871) 21 86 (861)						22.25 (.876)	25 63 (1.009) 25.47 (1 003)	25 79 (1 015) 25 67 (1.011)			27 67 (1 089) 27 57 (1 085)
G	21	16 90 (665) 16 73 (659)	25 30 996) 25 04 (986)	1 85 (073) 1 46 (057)	6 84 (269) 5 86 (231)	15 78 (669) 15 55 (612)	13 20 (.520)	6 76 (266) 6.60 (260)	25 42 (1 001)	28 80 (1.134) 28.64 (1 128)	28 96 (1 140) 28.64 (1 135)	2 77 (109) 2 64 (104)		30.84 (1.214) 30 74 (1 210)
H	23		28 48 1 121) 28.21 1 111)						28 60 (1 126)	31 98 (1.295) 31 82 (1 253)	32 14 (1 265) 32 02 (1 261)			34 12 (1 343) 34 02 (1 339)
J	25		31 65 1 246) 31 39 1 236)						31 77 (1 251)	35.15 (1.384) 34.85 (1 378)	35 31 (1.390) 31.19 (1.385)			37 34 (1 470) 37.24 (1 466)

FIGURE 4 Connector intermateability dimensions (series IV) - Continued

Source: https://assist.dla.mil -- Downloaded: 2016-11-16T13:24Z
Check the source to verify that this is the current version before use.

Plug						
Shell size code 10	Shell size	N	P min	V pin insr loc	W pin cont loc	X skt insr loc
B	11	2 37 (093)	4 08 (.161)			
C	13					
D	15	2 26 (089)				
E	17			15 14 (596)	10 72 (422)	1 05 (041)
F	19	2 62 (103)	3 83 (1 51)	14 73 (580)	9 70 (382)	0 76 (030)
G	21					
H	23	2 51 (099)				
J	25					

NOTES

1 Dimensions are in milimeters
2 Inch equivalents are for general information only
3 Inch equivalents are in parentheses
4 Initial contact with static seal
5 Unmated dimensions
6 A point at which a gauge pin, having the same basic diameter as the mating contact and a square face, touches socket contact spring
7 A point at which a gauge, having the same basic diameter as the mating receptacle shell, and a square face, touches the RFI spring
8 S..ling/grounding surface
9 Applies to sizes 19 through 25
10 For diameters "L", "M", and "MM" see main key/keyway polarization figure (see figure 7)
11 Applies to shell sizes 11 through 17
12 See table IX for shell size code for part numbering

FIGURE 4 Connector intermateability dimensions (series IV) - Continued

Source: https://assist.dla.mil -- Downloaded: 2016-11-16T13:24Z
Check the source to verify that this is the current version before use.

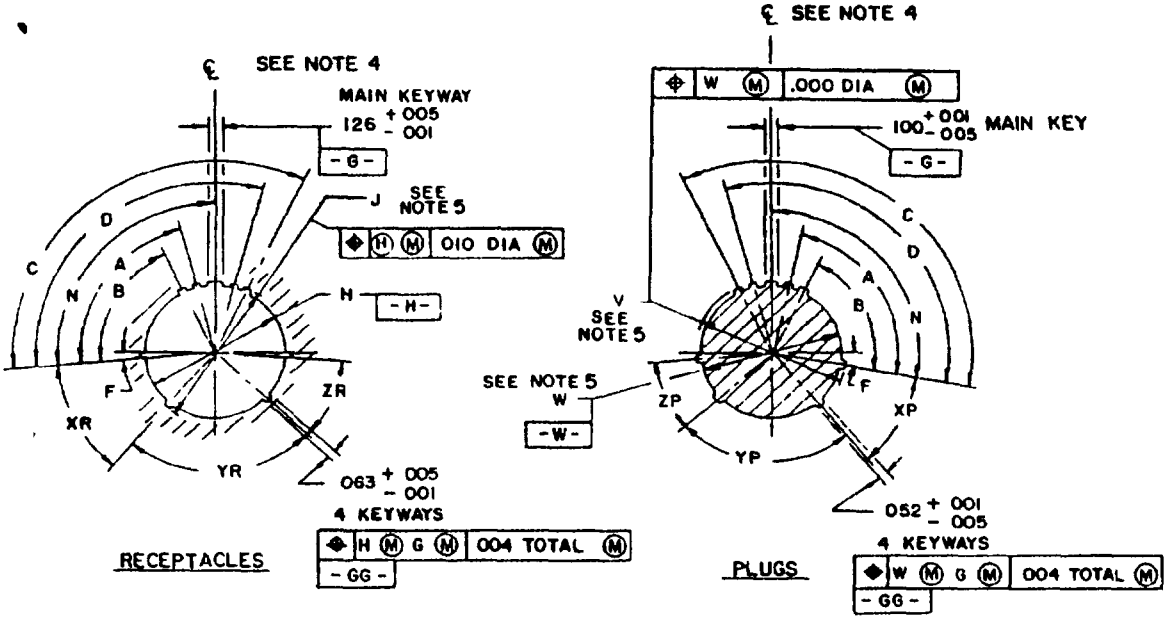

Inches	mm
.001	0.03
.004	0.10
.005	0.13
.010	0.25
.052	1.32
.063	1.60
.100	2.54
.126	3.20

Main key/keyway polarization.

FIGURE 5. Connector intermateability dimensions (series I and II).

Source: https://assist.dla.mil -- Downloaded: 2016-11-16T13:24Z
Check the source to verify that this is the current version before use.

Series I assemblies									
Shell size	F	Normal rotation				letter designation			
		N	XR XP	YR YP	ZR ZP	A	B	C	D
9	5°	95°	45°	88°	27°	77°	---	---	113°
11	5°	95°	45°	88°	27°	81°	67°	123°	109°
13	5°	95°	45°	88°	27°	75°	63°	127°	115°
15	5°	95°	45°	88°	27°	74°	61°	129°	116°
17	5°	95°	45°	88°	27°	77°	65°	125°	113°
19	5°	95°	45°	88°	27°	77°	65°	125°	113°
21	5°	95°	45°	88°	27°	77°	65°	125°	113°
23	5°	95°	45°	88°	27°	80°	69°	121°	110°
25	5°	95°	45°	88°	27°	80°	69°	121°	110°

Series II assemblies									
Shell size	F	Normal rotation				letter designation			
		N	XR XP	YR YP	ZR ZP	A	B	C	D
8	10°	100°	28°	100°	37°	82°	---	---	118°
10	10°	100°	28°	100°	37°	86°	72°	128°	114°
12	10°	100°	28°	100°	37°	80°	68°	132°	120°
14	10°	100°	28°	100°	37°	79°	66°	134°	121°
16	10°	100°	28°	100°	37°	82°	70°	130°	118°
18	10°	100°	28°	100°	37°	82°	70°	130°	118°
20	10°	100°	28°	100°	37°	82°	70°	130°	118°
22	10°	100°	28°	100°	37°	85°	74°	126°	115°
24	10°	100°	28°	100°	37°	85°	74°	126°	115°

NOTES.
1 Dimensions are in inches
2 Metric equivalents are given for general information only
3 All angles are BSC.
4 ℄ indicates center line of insert arrangement. The insert arrangement and the 4 minor keyways do not rotate with main key/keyway The main key/keyway rotates to position A, B, C, or D for alternates
5 For indicated dimensions, see applicable series detail of this figure

Main key/keyway polarization

FIGURE 5 Connector intermateability dimensions (series I and II) - Continued

Source: https://assist.dla.mil -- Downloaded: 2016-11-16T13:24Z
Check the source to verify that this is the current version before use.

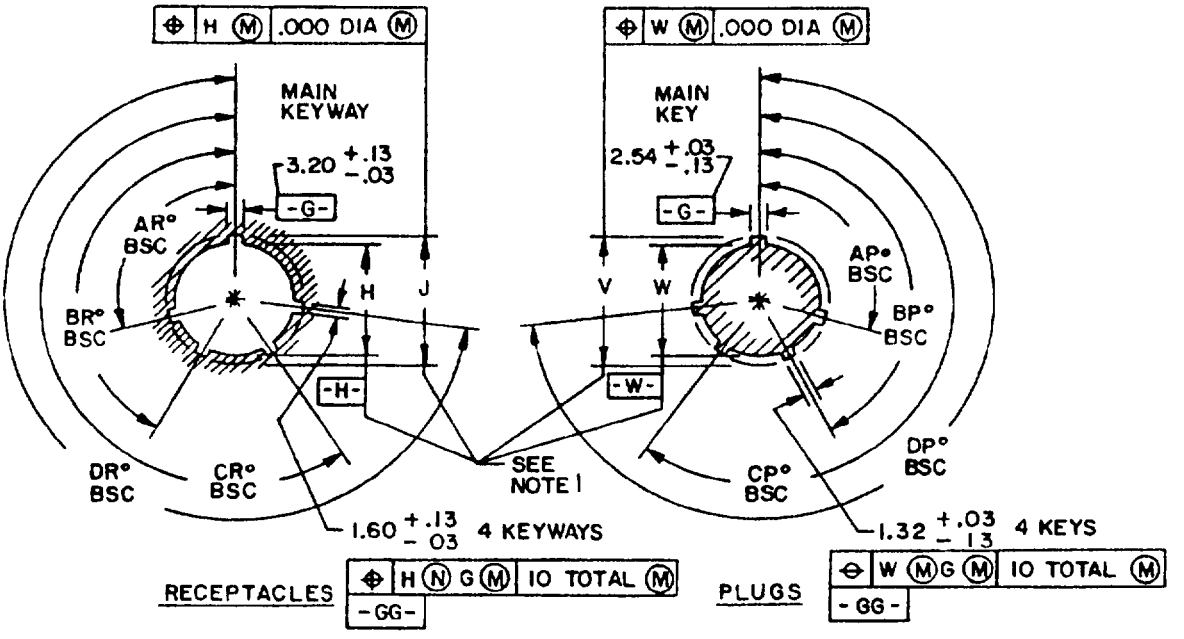

Main key/keyway polarization

FIGURE 6 Connector intermateability dimensions (series III).

Source: https://assist.dla.mil -- Downloaded: 2016-11-16T13:24Z
Check the source to verify that this is the current version before use.

Shell size	Key & keyway arrangement identification letter	AR° or AP° BSC	BR° or BP° BSC	CR° or CP° BSC	DR° or DP° BSC
9	N	105	140	215	265
	A	102	132	248	320
	B	80	118	230	312
	C	35	140	205	275
	D	64	155	234	304
	E	91	131	197	240
11, 13, and 15	N	95	141	208	236
	A	113	156	182	292
	B	90	145	195	252
	C	53	156	220	255
	D	119	146	176	298
	E	51	141	184	242
17 and 19	N	80	142	196	293
	A	135	170	200	310
	B	49	169	200	244
	C	66	140	200	257
	D	62	145	180	280
	E	79	153	197	272
21, 23, and 25	N	80	142	196	293
	A	135	170	200	310
	B	49	169	200	244
	C	66	140	200	257
	D	62	145	180	280
	E	79	153	197	272

NOTES
1 Dimensions are in millimeters
2 Inch equivalent are for general information only
3 All angles are BSC
4 The insert arangement does not rotate with main key/keyway

Main key/keyway polarization

FIGURE 6 Connector intermateability dimensions (series III) - Continued

Source: https://assist.dla.mil -- Downloaded: 2016-11-16T13:24Z
Check the source to verify that this is the current version before use.

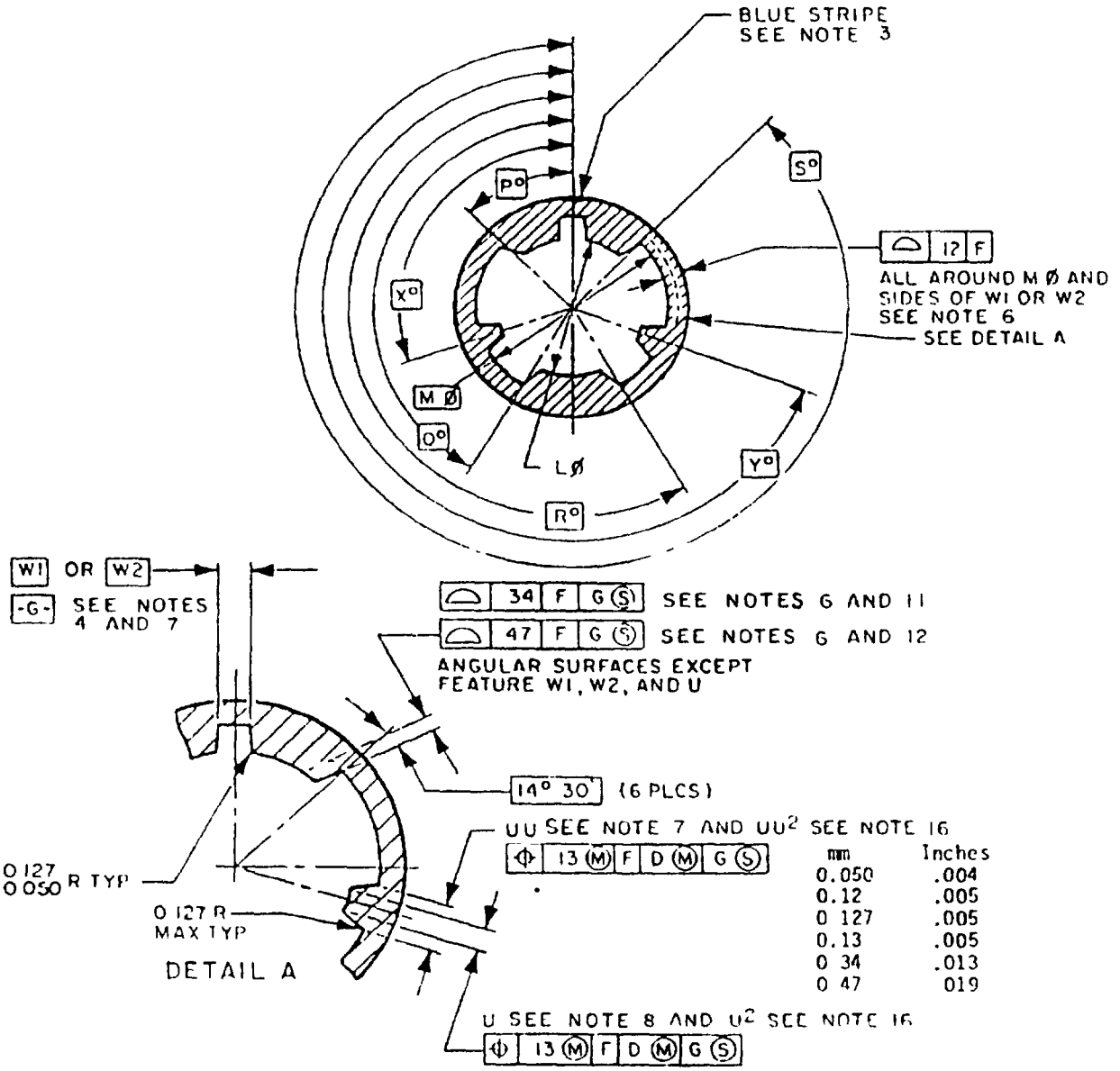

mm	Inches
0.050	.004
0.12	.005
0 127	.005
0.13	.005
0 34	.013
0 47	019

PLUG, OUTER COUPLING RING

Main key/keyway polarization

FIGURE 7 Connector intermateability dimensions (series IV)

Source: https://assist.dla.mil -- Downloaded: 2016-11-16T13:24Z
Check the source to verify that this is the current version before use.

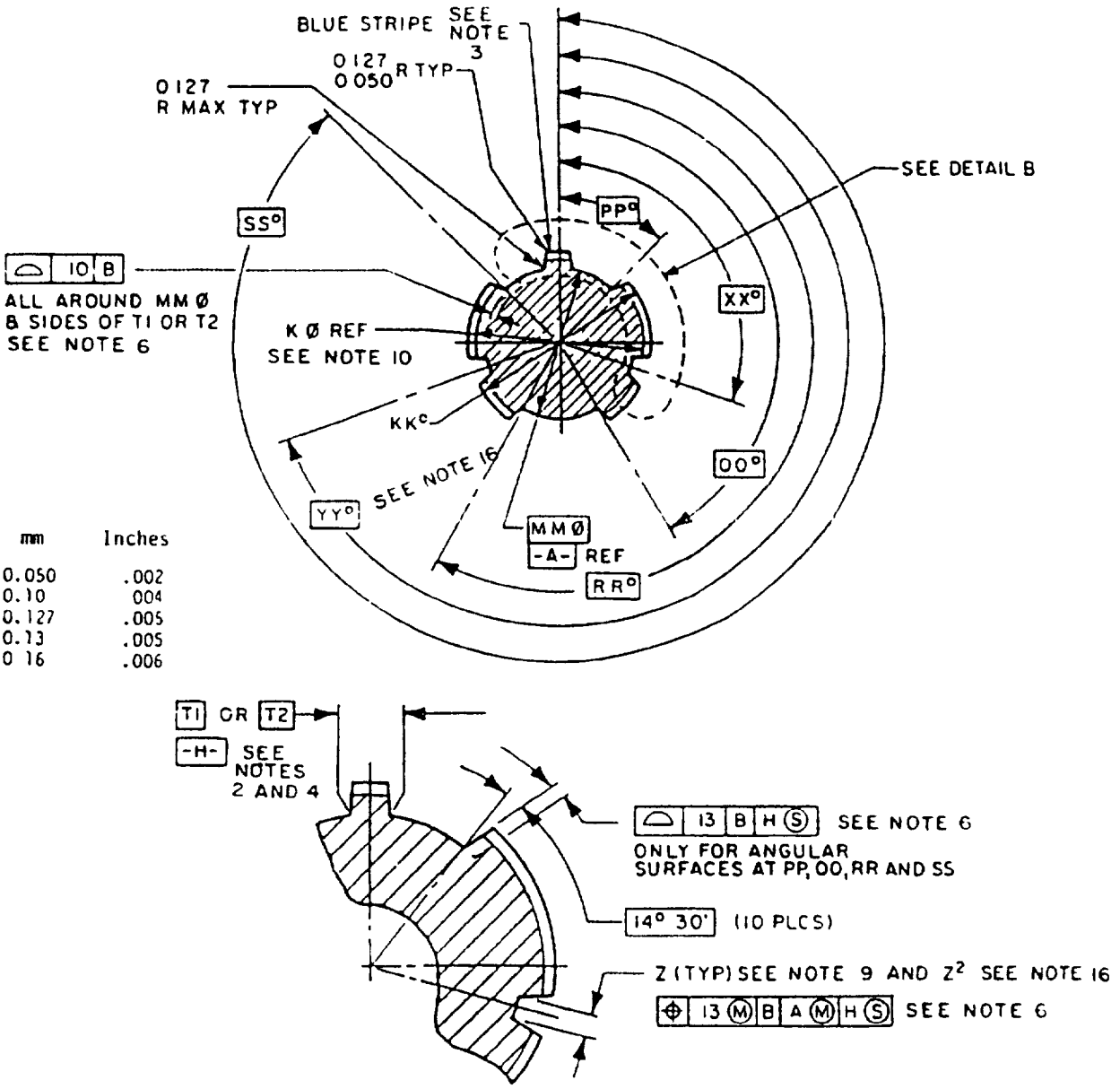

RECEPTACLE

Main key/keyway polarization

FIGURE 7 Connector intermateability dimensions (series IV) - Continued.

Source: https://assist.dla.mil -- Downloaded: 2016-11-16T13:24Z
Check the source to verify that this is the current version before use.

mm	Inches
0.10	.004
0.127	.005
0.17	.007
0.20	.008

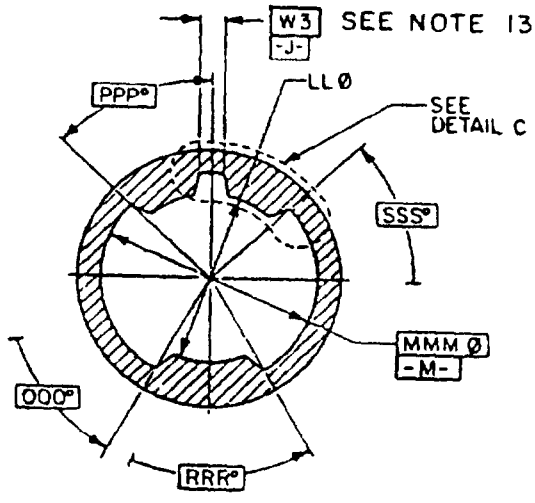

INNER PLUG SHELL

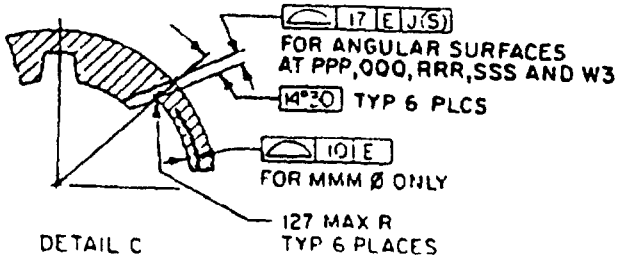

Main key/keyway polarization

FIGURE 7 Connector intermateability dimensions (series IV) - Continued

Source: https://assist.dla.mil -- Downloaded: 2016-11-16T13:24Z
Check the source to verify that this is the current version before use.

Shell size code See note 14	Plug, inner shell							Main keyway inner shell
	Shell size	LL Dia	MMM Dia BSC	PPP BSC	QQQ BSC	RRR BSC	SSS BSC	W3 BSC See note 13
B	11	13 33 (525) 13 10 (516)	15 01 (591)	46°22'	149°13'	210°47'	313°38'	2 73 (107)
C	13	16 79 (661) 16 53 (651)	18 34 (722)	45°54'	149°3'	210°57'	314°6'	
D	15	19 96 (786) 19 71 (776)	21 49 (.846)	45°48'	149°10'	210°50'	314°12'	3 26 (128)
E	17	23 17 (912) 22 91 (902)	24 66 (971)	45°40'	149°19'	210°41'	314°20'	
F	19	26 06 (1 026) 25 81 (1 016)	27 69 (1 090)	45°34'	149°27'	210°33'	314°26'	3 76 (148)
G	21	29 24 (1 151) 28 98 (1 141)	30 86 (1 215)	45°29'	149°29'	210°31'	314°31'	
H	23	32 41 (1 276) 31 16 (1 266)	34 14 (1 344)	45°27'	149°28'	210°32'	314°33'	4 28 (169)
J	25	35 59 (1 401) 35 33 (1 391)	37 36 (1 471)	45°30'	149°34'	210°26'	314°30'	

Main Key/Keyway Polarization

FIGURE 7 Connector intermateability dimensions (series IV) - Continued

Source: https://assist.dla.mil -- Downloaded: 2016-11-16T13:24Z
Check the source to verify that this is the current version before use.

Shell size code (See note 14)	Receptacle								Main key (RCPT) (BSC) SEE note 1	
	Shell size	MM DIA (BSC)	PP°	QQ°	RR°	SS°	Z	Z' See note 16	SKT CONT T1	PIN CONT T2 See note 4
B	11	13 09 (515)	44°28'	151°6'	208°54'	315°32'	1 83 (072)	.097 (2 46)	1 90 (075)	2 78 (109)
C	13	16.51 (650)	44°25'	150°31'	209°29'	315°35'	1 52 (060)	085 (2 16)	1 94 (076)	2 85 (112)
D	15	19 69 (.775)	44°33'	150°24'	209°36'	315°27'	2 34 (092)	127 (3 23)	2 43 (096)	3 36 (132)
E	17	22 89 (.901)	44°36'	150°22'	209°38'	315°24'	2 03 (080)	115 (2 92)	2.45 (096)	3 40 (134)
F	19	25 79 (1 015)	44°33'	151°27'	209°33'	315°27'	2 85 (.112)	157 (3 99)	2 96 (117)	3 91 (154)
G	21	28 96 (1 140)	44°34'	150°23'	209°37'	315°26'	2 54 (100)	145 (3 68)	2 99 (118)	3 94 (.155)
H	23	32 14 (1 265)	44°34'	150°20'	209°40'	315°26'	3 35 (132)	187 (4 75)	3 50 (138)	4 46 (176)
J	25	35 31 (1 390)	44°42'	150°22'	209°38'	315°18'	3 04 (120)	175 (4 45)	3 53 (139)	4 49 (177)

TABLE II Polarity dimensions

Key and keyway arrangement	X° XX°	Y° YY°
N	110°	250°
A	100°	260°
B	90°	270°
C	80°	280°
D	70°	290°
K See note 16	120°	255°

Mainkey/Keyway Polarization

FIGURE 7 Connector intermateability dimensions (series IV) - Continued

Source: https://assist.dla.mil -- Downloaded: 2016-11-16T13:24Z
Check the source to verify that this is the current version before use.

Plug, outer coupling ring													
Shell size code See note 14	Shell size	L dia	M dia (BSC)	P°	Q°	R°	S°	U	U'	UU max	UU' max	W1 BSC pin con see note 7	W2 BSC SKT con see note 4 & 7
B	11	13 26 (.522) 13 16 (.518)	16 28 (.641)	47°21'	148°13	211°47'	312°39'	1 26 (.050)	2 06 (.081)	2 42 (.095)	3 20 (.126)	1 82 (.072)	2 84 (.112)
C	13	16 68 (.657) 16 58 (.653)	19 35 (.762)	46°34'	148°22'	211°38'	313°26'	0 95 (.037)	1 96 (.077)	2 22 (.087)	3 00 (.118)	1 85 (.073)	2 87 (.113)
D	15	19 86 (.782) 19 76 (.778)	22 50 (.886)	46°23'	148°35'	211°25'	313°37'	1 77 (.070)	2 82 (.111)	2 76 (.109)	3 81 (.150)	2 36 (.093)	3 37 (.133)
E	17	23 06 (.908) 22 96 (.904)	25 68 (1.011)	46°11'	148°47'	211°13'	313°49'	1 46 (.057)	2 72 (.107)	2 71 (.107)	3 58 (.141)		
F	19	25 96 (1.022) 25 86 (1.018)	27 71 (1.091)	45°33'	149°27'	210°33'	314°27'	2 28 (.090)	3 58 (.141)	2 94 (.116)	4 24 (.167)	2 87 (.113)	3 89 (.153)
G	21	29 13 (1.147) 29 03 (1.143)	30 88 (1.216)	45°28'	149°29	210°31'	314°32'	1 97 (.078)	3 48 (.137)	2 92 (.115)	4 22 (.166)		
H	23	32 31 (1.272) 32 21 (1.268)	34 16 (1.345)	45°25'	149°29'	210°31'	314°35'	2 78 (.109)	4 34 (.171)	3 47 (.137)	5 05 (.199)	3 37 (.133)	4 39 (.173)
J	25	35 48 (1.397) 35 38 (1.393)	37 38 (1.472)	45°30'	149°34'	210°26'	314°30'	2 47 (.097)	4 24 (.167)	3 47 (.137)	5 05 (.199)		

NOTES:

1. Dimensions are in millimeters, inch equivalents are in parentheses
2. Dimensions T1 and T2 (main key) apply at MM ℄
3. Color code main key or keyway
4. Main key/keyway dimensions "T2" (RCPT/PIN) and "W2" (PLUG/SKT) are for use with polarities N through K
5. key and keyway arrangements defined in table II apply to all shell sizes
6. See figure 4 for datums B, C, D -nd F
7. Dimensions W1", W2 (main keyway) and "UU" apply at "M" ℄
8. Dimension "U" (polarity keys) applies at "L ℄
9. Dimension "Z (polarity keys) applies at "MM" ℄
10. See figure 4 for dimensions K℄ and KK℄
11. Applies to shell sizes 19 through 25 only
12. Applies to shell sizes 11 through 17 only
13. Dimensions "W3" applies at MMM ℄
14. In the ready to mate position datums -G- and -J- are colinear
15. See table IX for shell size code for part numbering
16. For K polarization, see U', UU', and Z' for key/keyway dimensions width increase on Y" and YY"' positions for K pos

Main Key/Keyway polarization

FIGURE 7 Connector intermateability dimensions (series IV) - Continued

Source: https://assist.dla.mil -- Downloaded: 2016-11-16T13:24Z
Check the source to verify that this is the current version before use.

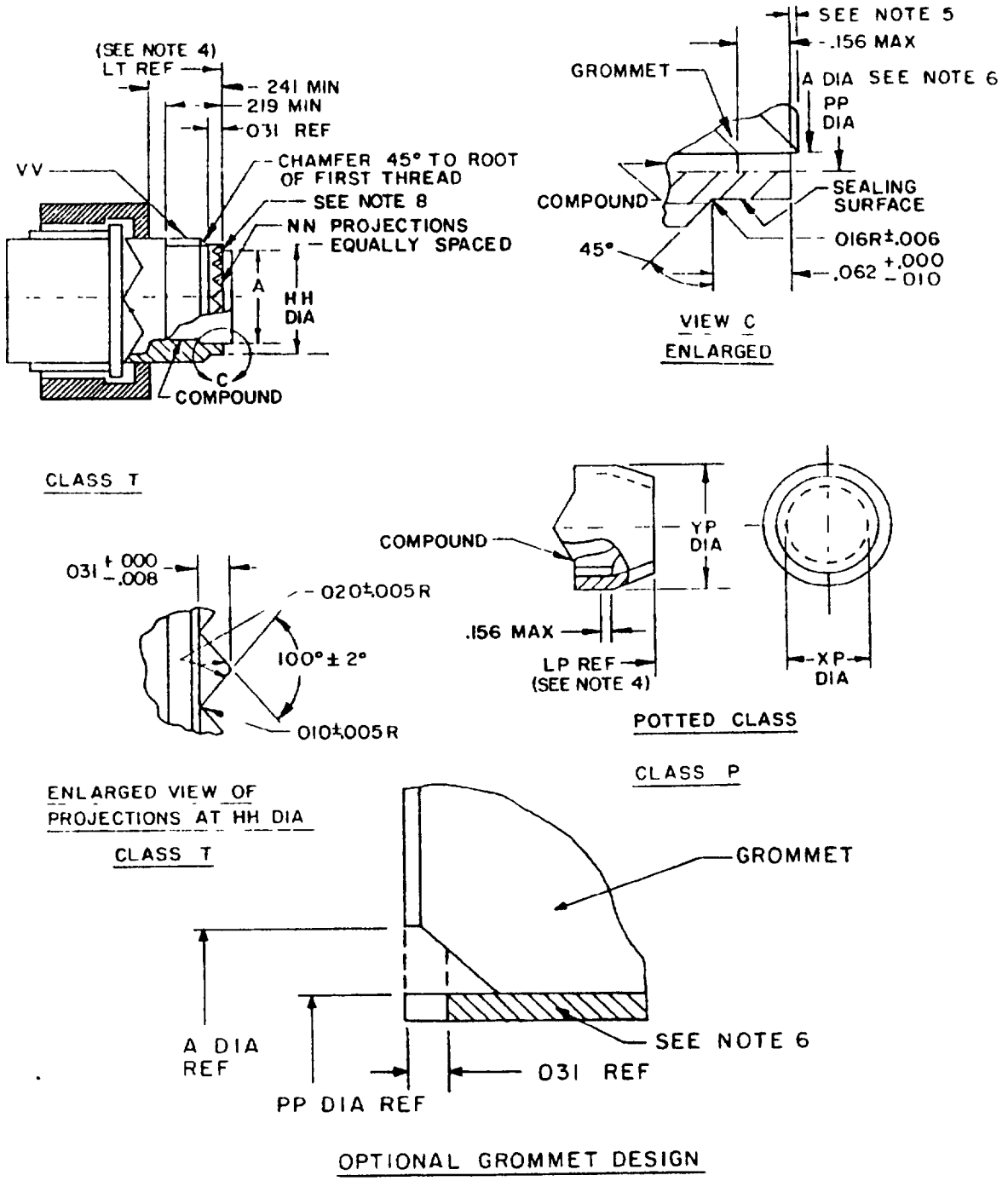

FIGURE 8 Connector accessory interface dimensions (series I).

Source: https://assist.dla.mil -- Downloaded: 2016-11-16T13:24Z
Check the source to verify that this is the current version before use.

Shell size code note 7	Shell size	A dia (grommet) max	HH dia + 001 - 005	NN dia	PP dia ± 003	XP min dia	YP max dia	VV thread class 2A UNEF (plated)
A	9	299	386	12	344	434	641	4375-28
B	11	427	503	16	472	548	766	5625-24
C	13	541	628	20	586	673	891	6875-24
D	15	666	742	24	711	798	1 016	8125-20
E	17	791	866	28	836	899	1 125	9375 20
F	19	897	984	32	942	1 024	1 250	1 0625-18
G	21	1 022	1 109	36	1 067	1.149	1.375	1 1875-18
H	23	1 147	1 234	40	1 192	1 274	1 500	1.3125-18
J	25	1.272	1.359	44	1 317	1 399	1 625	1 4375-18

Inches	mm	Inches	mm	Inches	mm	Inches	mm	Inches	mm
001	0 03	299	7 59	666	16.92	899	22 83	1 192	30 28
005	0 13	344	8 54	673	17 09	942	23.93	1 234	31 34
006	0 15	386	9 80	711	18 06	984	24 99	1 250	31 75
008	0 20	427	10 85	742	18 85	1 016	25 81	1 272	32 31
010	0 25	434	11 02	766	19 46	1 022	25 96	1 274	32 36
016	0 41	472	11 99	791	20 09	1 024	26 01	1 317	33 45
020	0 51	503	12 78	798	20 27	1 067	27 10	1 359	34 52
031	0 79	541	13 74	836	21 23	1 109	28 17	1 375	34 92
621	1 57	548	13 92	866	22 00	1 125	28 58	1 399	35 53
156	3 96	586	14 88	891	22 63	1 147	29 13	1 500	38 10
219	5 56	628	15 95	897	22 78	1 149	29 18	1 625	41 28
241	6 12	641	16 28						

NOTES

1. Dimensions are in inches
2. Metric equivalents are given for general information only
3. Threads may have modified major diameter
4. For dimensions of LP and LT, see MS sheet form standards
5. Grommet extension shall not exceed 060 For connectors containing size 10 contacts the grommet extension shall not exceed 234 inch
6. Grommet may taper to inner diameter
7. See table IX for shell size code for part numbering
8. The centerline of indicated projection must be located on vertical centerline within 2° of -GG- (see main key/keyway polarization detail of figure 5)

FIGURE 8 Connector accessory interface dimensions (series I) - Continued

Source: https://assist.dla.mil -- Downloaded: 2016-11-16T13:24Z
Check the source to verify that this is the current version before use.

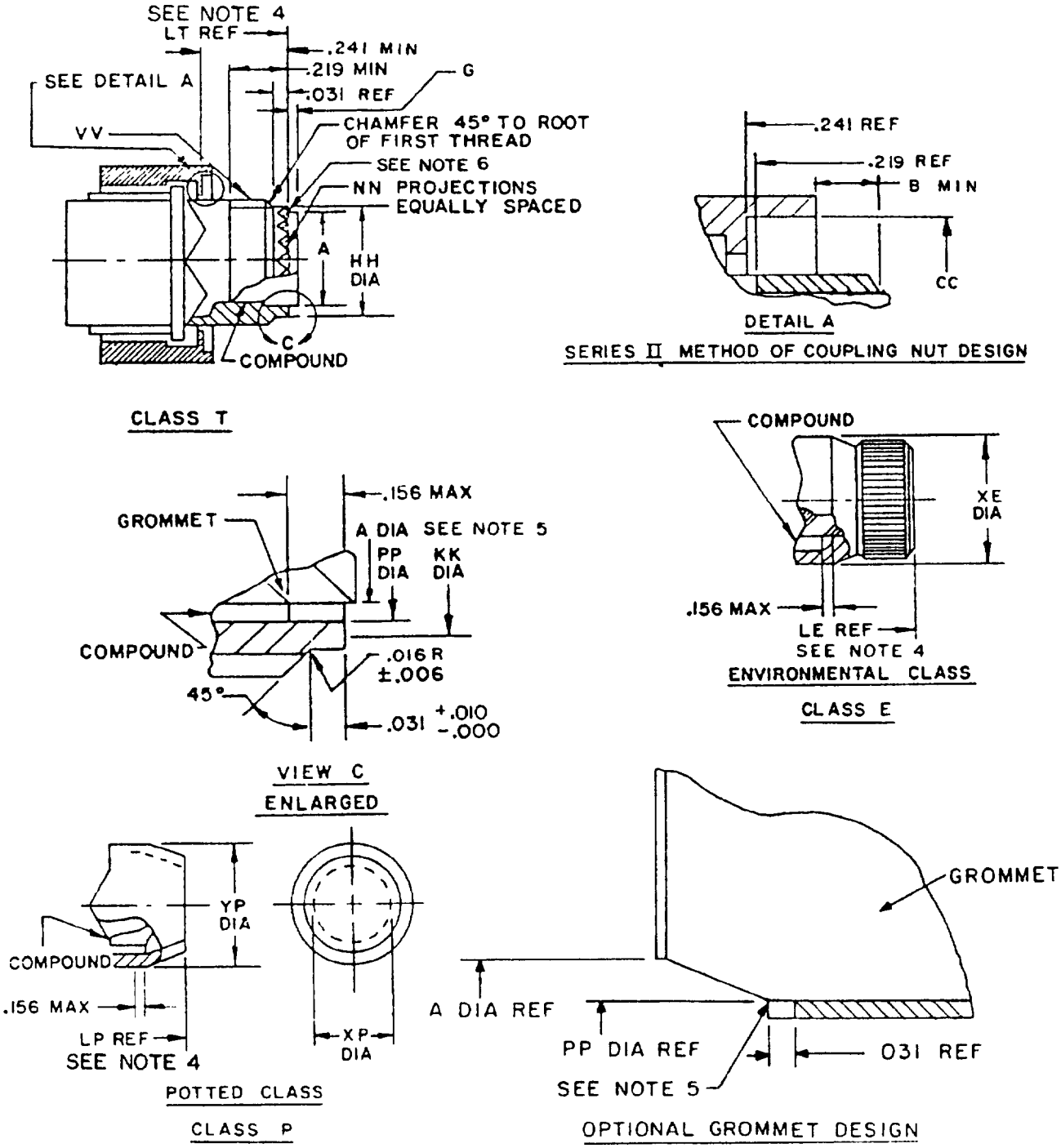

FIGURE 9 Connector accessory interface dimensions (series II)

Source: https://assist.dla.mil -- Downloaded: 2016-11-16T13:24Z
Check the source to verify that this is the current version before use.

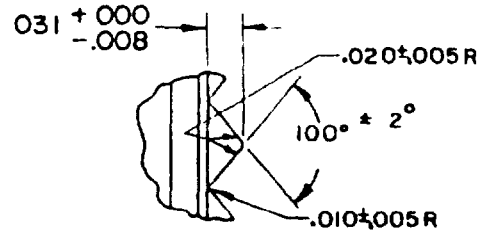

ENLARGED VIEW OF
PROJECTIONS AT HH DIA

CLASS T

Shell size	G grommet projection class T only	HH dia + 001 - 005	NN	PP dia ± 003	XE max dia	XP min dia	YP max dia	VV thread UNEF-2A (plated)	A dia (grommet) max	CC min dia	B min
8		387	12	344	594	434	641	4375-28	299	578	135
10		515	16	472	719	548	766	5625-24	427	719	135
12		628	20	586	844	673	891	6875-24	541	844	135
14		754	24	711	969	798	1 016	8125-20	666	969	135
16	120 ± 030	879	28	836	1 094	899	1 125	9375-20	791	1 094	135
18		985	32	942	1 219	1 024	1 250	1 0625-18	897	1 219	109
20		1 110	36	1 067	1 344	1 149	1 375	1 1875-18	1 022	1 344	109
22		1 235	40	1 192	1 469	1 274	1 500	1 3125-18	1 147	1 469	109
24	090 ± 050	1 360	44	1 317	1 594	1 399	1 625	1 4375-18	1 272	1 594	109

NOTES
1. Dimensions are in inches
2. Metric equivalents are given for general information only
3. Thread may have modified major diameters
4. For dimensions of LE, LP, and LT, see applicable MS sheet form standard
5. Grommet may taper to shell inner diameter
6. The centerline of indicated projection must be located on vertical centerline within 2° of -GG- (see main key-keyway polarization detail of figure 5)

FIGURE 9 Connector accessory interface dimensions (series II) - Continued

Source: https://assist.dla.mil -- Downloaded: 2016-11-16T13:24Z
Check the source to verify that this is the current version before use.

Inches	mm	Inches	mm	Inches	mm	Inches	mm	Inches	mm
.001	0.03	.219	5.56	.641	16.28	.899	22.83	1.219	30.96
.005	0.13	.241	6.12	.666	16.92	.942	23.93	1.235	31.37
.006	0.05	.299	7.59	.673	17.09	.969	24.61	1.250	31.75
.008	0.20	.344	8.74	.711	18.06	.985	25.02	1.272	32.31
.010	0.25	.387	9.83	.719	18.26	1.016	25.81	1.274	32.36
.016	0.41	.427	10.85	.754	19.15	1.022	25.96	1 317	33.45
.020	0.51	.434	11.02	.766	19.46	1.024	26.01	1.344	34.14
.030	0.76	.472	11.99	.791	20.09	1.067	27.10	1.360	34.54
.031	0.79	.515	13.08	.798	20.27	1.094	27.79	1 375	34.92
.050	1.27	.541	13.74	.836	21.23	1.110	28.19	1.399	35.53
.090	2.29	.548	13.92	.844	21.44	1.125	28.58	1.469	37.31
.109	2.77	.578	14.68	.879	22.33	1.147	29.13	1 500	38.10
.120	3.05	.586	14.88	.891	22.63	1.149	29.18	1.594	40.49
.135	3.43	.594	15.09	.897	22.78	1.192	30.28	1.625	41.28
.156	3.96	.6.28	15.95						

FIGURE 9. Connector accessory interface dimensions (series II) - Continued.

Source: https://assist.dla.mil -- Downloaded: 2016-11-16T13:24Z
Check the source to verify that this is the current version before use.

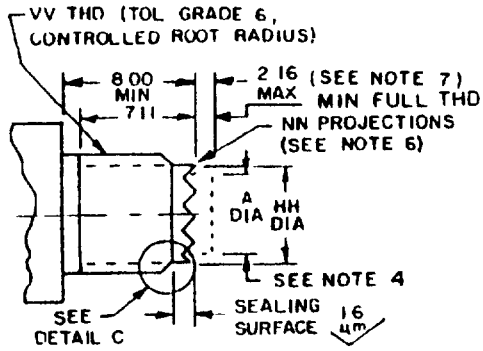

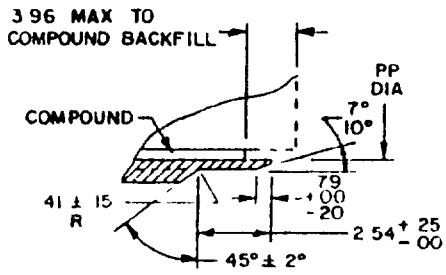

DETAIL C ENLARGED

Shell size code note 5	Shell size	A max	HH + 00 - 15	NN	PP max	YY thread
A	9	7 59 (30)	10 57 (41)	12	8 80 (34)	M12x1 0-6g 0 100R
B	11	10 85 (.42)	13 56 (53)	16	12 07 (47)	M15x1 0-6g 0 100R
C	13	13 74 (53)	16 58 (65)	20	14 96 (58)	M18x1.0-6g 0 100R
D	15	16 92 (66)	20 57 (80)	24	18 14 (71)	M22x1.0-6g 0 100R
E	17	20 09 (78)	23.57 (92)	28	21 31 (83)	M25x1.0-6g 0 100R
F	19	22.78 (89)	26 57 (1 04)	32	24 00 (94)	M28x1.0-6g 0 100R
G	21	25 96 (1 01)	29 57 (1 15)	36	27 18 (1 06)	M31x1 0-6g 0 100R
H	23	29 13 (1 14)	32 56 (1 27)	40	30 35 (1 18)	M34x1 0-6g 0 100R
J	25	32 31 (1 26)	35 56 (1 39)	44	33 53 (1 31)	M37x1 0-6g 0 100R

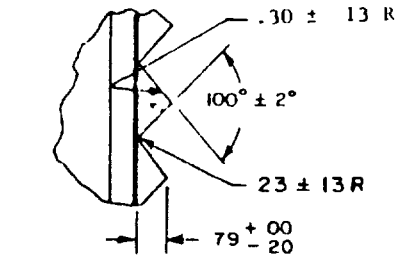

ENLARGED VIEW OF PROJECTIONS AT HH DIA

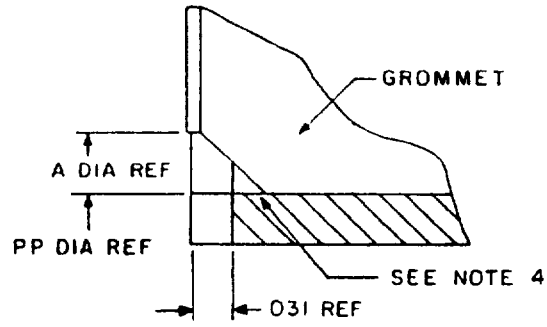

OPTIONAL GROMMET DESIGN

NOTES
1 Dimensions are in millimeters
2 Inch equivalents are in parentheses
3 Threads are to be inspected with a 6h go-gauge and a 6g no-go-gauge
4 Grommet may taper to shell inner diameter
5 See table IX for shell size code for part numbering
6 The centerline of indicated projection must be located on vertical centerline within 2° of -G- (see key/keyway polarization detail of figure 6 for series III and figure 7 for series IV)
7 For size 10 contact arrangements, 5 95 maximum

FIGURE 10 Connector accessory interface dimensions (series III and IV)

Source: https://assist.dla.mil -- Downloaded: 2016-11-16T13:24Z
Check the source to verify that this is the current version before use.

Metric external thread dimensions (VV) for series III and IV

Designation (thread size)	Major diameter		Pitch diameter		Minor diameter	
	Max	Min	Max	Min	Max	Min
M12x1.0-6g 0 100R	11 974	11 794	11.324	11 206	10 747	10 557
M15x1 0-6g 0 100R	14.974	14 794	14 324	14 206	13 747	13 557
M17x1 0-6g 0 100R	16.974	16 794	16 324	16 206	15 747	15.557
M18x1 0-6g 0 100R	17 974	17 794	17 324	17 206	16 747	16.557
M20x1 0-6g 0 100R	19 974	19 794	19 324	19 206	18 747	18 557
M22x1 0-6g 0 100R	21 974	21 794	21 324	21 206	20 747	20.557
M25x1 0-6g 0 100R	24.974	24.794	24.324	24.199	23 747	23.550
M28x1 0-6g 0 100R	27 974	27 794	27 324	27.199	26.747	26 550
M31x1 0-6g 0 100R	30 974	30 794	30 324	30 199	29 747	29 550
M32x1 0-6g 0.100R	31 974	31 794	31 324	31 199	30.747	30 550
M34x1 0-6g 0 100R	33 974	33 794	33 324	33 199	32 747	32 550
M35x1 0-6g 0 100R	34 974	34 794	34 324	34 199	33 747	33.550
M37x1.0-6g 0.100R	36.974	36 794	36.324	36 199	35 747	35.550
M38x1 0-6g 0 100R	37.974	37 794	37 324	37 199	36 747	36.550
M41x1 0-6g 0 100R	40.974	40 794	40 324	40 199	39 747	39 550
M44x1 0-6g 0 100R	43.974	43 794	43 324	43.199	42 747	42 550
M47x1 0-6g 0.100R	46 974	46 794	46 324	46 199	45 747	45 550

FIGURE 10 Connector accessory interface dimensions (series III and IV) - Continued

Source: https://assist.dla.mil -- Downloaded: 2016-11-16T13:24Z
Check the source to verify that this is the current version before use.

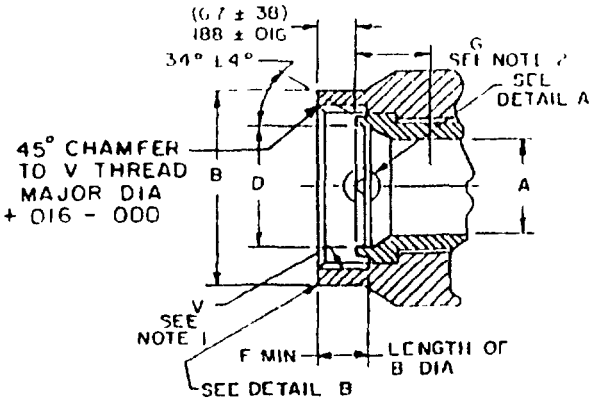

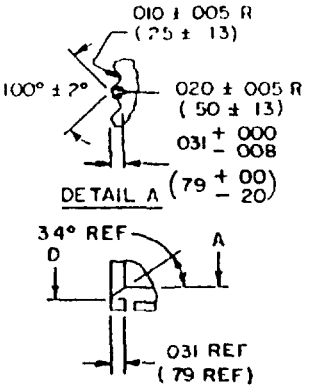

SLEEVE SIZES 24 AND 25
ONLY LESS ACC NUT
DETAIL B (OPTIONAL DESIGN)

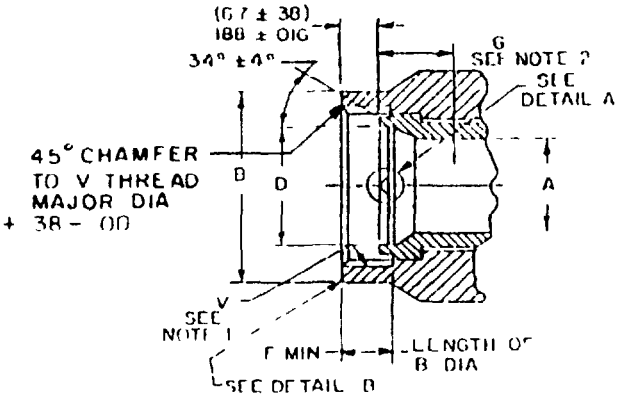

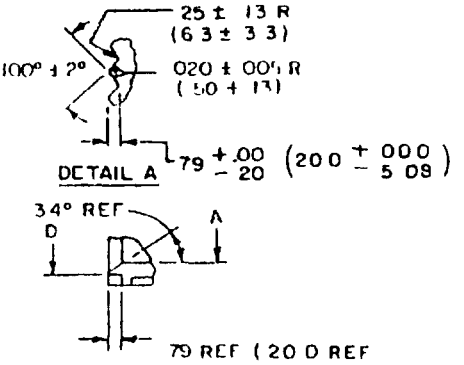

SLEEVE SIZES 24 AND 25
ONLY LESS ACC NUT
DETAIL B (OPTIONAL DESIGN)

Inches	mm	Inches	mm	Inches	mm	Inches	mm	Inches	mm	Inches	mm
005	0.13	022	0.56	172	4 37	567	14 40	.863	21.92	1.169	29.69
008	0 20	023	0.58	269	6 83	.641	16 28	919	23.34	1.203	30.56
010	0.25	031	0.79	.321	8.15	.688	17.48	.954	24.23	1 238	31 45
016	0 41	062	1 57	402	10 21	704	17.88	.988	25.10	1.290	32 77
.018	0.46	.067	1.70	.449	11.40	.766	19.46	1.044	26 52	1 329	33.76
.019	0.48	084	2 13	516	13 11	.813	20.65	1.079	27.41	1.454	36.93
.020	0.50	117	2.97	.565	14.35	.829	21.06	1.113	28.27	1.579	40 11

NOTES

1. Dimensions are in inches for series I and II and dimensions are in millimeters for series III and IV.
2. Minimum penetration of "A" diameter from front of serrations
3. See table IX for shell size code for part numbering.

FIGURE 11 Accessory front end data (series I through IV)

Source: https://assist.dla.mil -- Downloaded: 2016-11-16T13:24Z
Check the source to verify that this is the current version before use.

Shell size code note 3	Shell size	Conn series	A dia 1/	B dia 1/	D dia 1/	F min dim 1/	G dim 2/	M number of teeth	V Thread 1/
	9	I	269 ± 005	567 + 000 - 062	321 + 023 - 022	084	117	12	437-28UNEF-2B
	8	II							
A	9	III and IV	(6 7) Min	(15 24) Max	(7 5) Min	(2 1)	(2 9)		(M12x1 0-6H)
	11	I	402 ± 010	704 + 000 - 062	449 + 023 - 022	084	117	16	562-24UNEF-2B
	10	II							
B	11	III and IV	(9 9) Min	(18 21) Max	(10 8) Min	(2 1)	(2 9)		(M15x1 0-6H)
	13	I	516 ± 010	829 + 000 - 062	565 + 023 - 022	084	117	20	687-24UNEF-2B
	12	II							
C	13	III and IV	(12 8) Min	(21 18) Max	(13 8) Min	(2 1)	(2 9)		(M18x1 0-6H)
	15	I	641 ± 010	954 + 000 - 062	688 + 023 - 022	084	117	24	812-20UNEF-2B
	14	II							
D	15	III and IV	(16 0) Min	(25 14) Max	(16 9) Min	(2 1)	(2.9)		(M22x1 0-6H)
	17	I	766 ± 010	1 079 + 000 - 062	813 + 023 - 022	084	117	28	937-20UNEF-2B
	16	II							
E	17	III and IV	(19 2) Min	(28 12) Max	(20 1) Min	(2 1)	(2 9)		(M25x1 0-6H)
	19	I	863 ± 019	1 203 + 000 - 062	919 + 023 - 022	172	117	32	1 062-18UNEF-2B
	18	II							
F	19	III and IV	(21 4) Min	(31 09) Max	(22 8) Min	(2 1)	(2 9)		(M28x1 0-6H)
	20	II	988 ± 018	1 329 + 000 - 062	1 044 + 023 -.022	172	117	36	1 187-18UNEF-2B
G	21	III and IV	(24 6) Min	(34 06) Max	(26 0) Min	(2 1)	(2 9)		(M31x1 0-6H)
	23	I	1 113 ± 019	1 454 + 000 - 062	1 169 + 023 - 022	172	117	40	1 312-18UNEF-2B
	22	II							
H	23	III and IV	(27 7) Min	(36 9) Max	(29 1) Min	(2 1)	(2 9)		(M34x1 0-6H)
	25	I	1 238 ± 019	1 579 + 000 - 062	1 290 + 023 - 022	172	067	44	1 437-18UNEF-2B
	24	II							
J	25	III and IV	(30 9) Min	(39 88) Max	(32 3) Min	(2 1)	(1 7)		(M37x1 0-6H)

1/ See note 1
2/ See note 2

FIGURE 11 Accessory front end data (series I through IV) - Continued

Source: https://assist.dla.mil -- Downloaded: 2016-11-16T13:24Z
Check the source to verify that this is the current version before use.

Metric internal thread dimensions for series III and IV)

Designation (thread size)	Minor diameter		Pitch diameter		Major diameter	
	Max	Min	Max	Min	Max	Min
M12x1 0-6H 0 100R	10 917	11 153	11 350	11.510	12 000	12 304
M15x1 0-6H 0 100R	13 917	14 153	14 350	14 510	15 000	15 304
M17x1 0-6H 0 100R	15 917	16 153	16 350	16 510	17 000	17 304
M18x1 0-6H 0 100R	16 917	17 153	17 350	17 510	18 000	18 304
M20x1 0-6H 0 100R	18 917	19 153	19 350	19 510	20 000	20 304
M22x1 0-6H 0 100R	20 917	21 153	21 350	21 510	22 000	22 304
M25x1 0-6H 0 100R	23 917	24 153	24 350	24 520	25 000	25 314
M28x1 0-6H 0 100R	26 917	27 153	27 350	27 520	28 000	28 314
M31x1 0-6H 0 100R	29 917	30 153	30 350	30 520	31 000	31 314
M32x1 0-6H 0 100R	30 917	31 153	31 350	31 520	32 000	32 314
M34x1 0-6H 0 100R	32 917	33 153	33 350	33 520	34 000	34 314
M35x1 0-6H 0 100R	33 917	34 153	34 350	34 520	35 000	35 314
M37x1 0-6H 0 100R	35 917	36 153	36 350	36 520	37 000	37.314
M38x1 0-6H 0 100R	36 917	37 153	37 350	37 520	38 000	38 314
M41x1 0-6H 0 100R	39 917	40 153	40 350	40 520	41 000	41 314
M44x1 0-6H 0 100R	42 917	43 153	43 350	43 520	44 000	44 314
M47x1 0-6H 0 100R	45 917	46 153	46 350	46 520	47 000	47 314

FIGURE 11 Accessory front end data (series I through IV) - Continued

Source: https://assist.dla.mil -- Downloaded: 2016-11-16T13:24Z
Check the source to verify that this is the current version before use.

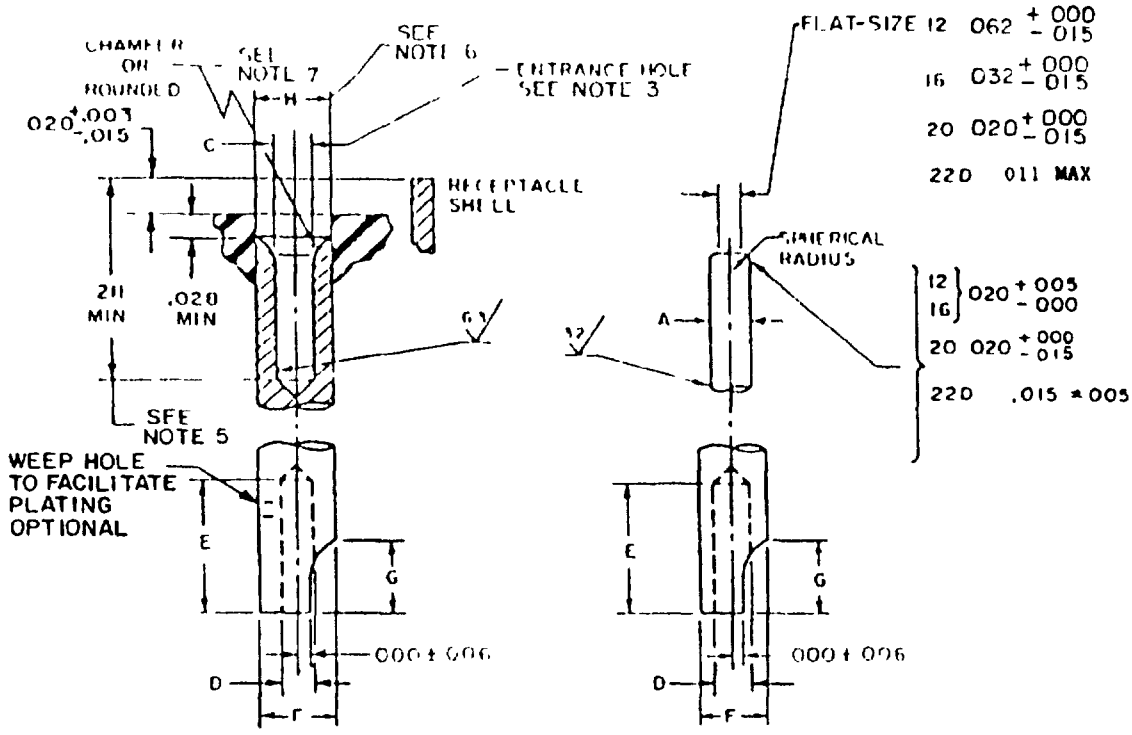

SOLDER CUP

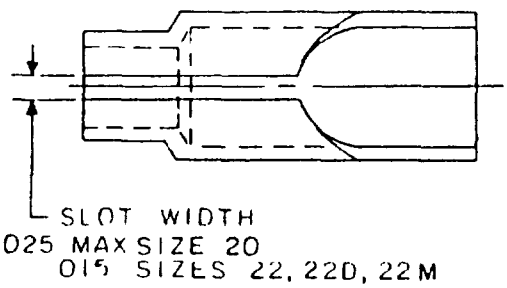

OPTIONAL DESIGN SOLDER CUP

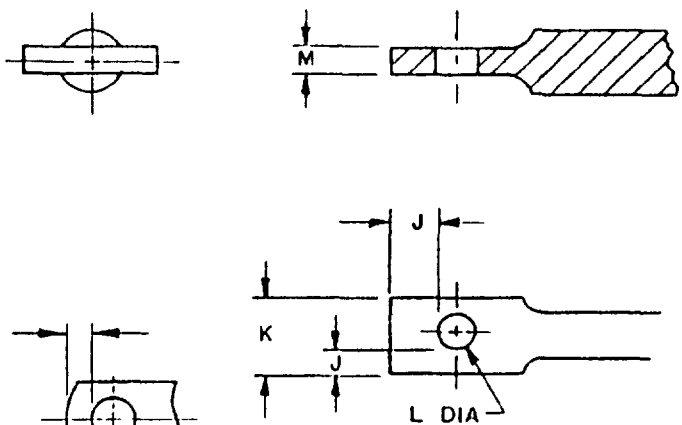

EYELET, X (PIN) AND Z (SOCKET)

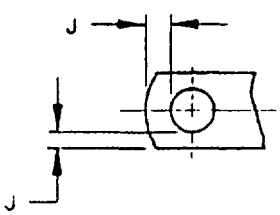

OPTIONAL EYELET

FIGURE 12. Hermetic contact configuration and dimensions

Source: https://assist.dla.mil -- Downloaded: 2016-11-16T13:24Z
Check the source to verify that this is the current version before use.

Contact size	A	C min	D	E	F	G	H + 005 - 000	Inches			
								J min	K max	L min	M min
22 1/ 22D 22M 1/	0305 0295	036	040 035	125 094	055 051	080 050	062	010	062	031	012
20	041 039	045	048 042	156 125	088 061	114 068	071	015	085	042	012
16	0635 0615	067	082 069	172 141	103 097	114 068	104	015	118	065	020
12	095 093	099	120 112	172 141	142 136	114 068	140	025	190	096	020

1/ Inactive for new design

Inches	mm	Inches	mm	Inches	mm	Inches	mm	Inches	mm
0005	0 013	0305	0 775	052	1 32	080	2 03	112	2 84
001	0 03	035	0 89	055	1 40	082	2 08	114	2 90
003	0 08	036	0 91	061	1 55	083	2 11	118	3 00
005	0 13	038	0 97	0615	1 562	088	2 24	120	3 05
006	0 15	039	0 99	062	1 57	093	2 36	125	3 18
008	0 20	040	1 02	0625	1 588	094	2 39	136	3 45
010	0 25	041	1 04	0635	1 613	095	2 41	140	3 56
011	0 28	042	1 07	067	1 70	097	2 46	141	3 58
015	0 38	045	1 14	068	1 73	099	2 51	142	3 61
020	0 51	048	1 22	069	1 75	102	2 59	156	3 96
028	0 71	050	1 27	071	1 80	103	2 62	172	4 37
0295	0 749	051	1 30	075	1 91	104	2 64	211	5 36
0300	0 762								

NOTES

1 Dimensions are in inches and over plating
2 Metric equivalents are given for general information only
3 Size 12 contacts shall refuse entry to a 102 minimum diameter pin
Size 16 contacts shall refuse entry to a 071 minimum diameter pin
Size 20 contacts shall refuse entry to a 048 minimum diameter pin
Size 22D contacts shall refuse entry to a 038 minimum diameter pin
C dimension to be maintained for 060 minimum
4 Dimensions shown effect interchangeability function, and fit
Unless specified, other design features are optional
5 A 040 ± 001 diameter pin for 20 contacts, a 0625 ± 001 diameter pin for 16 contacts, a 094 ± 001 diameter pin for 12 contacts, or a 0300 ± 0005 diameter pin for size 22D contacts shall enter socket to the depth indicated
6 Dimension H is the inner diameter of insert entry hole
7 Edges are not permissible

FIGURE 12 Hermetic contact configuration and dimensions - Continued

Source: https://assist.dla.mil -- Downloaded: 2016-11-16T13:24Z
Check the source to verify that this is the current version before use.

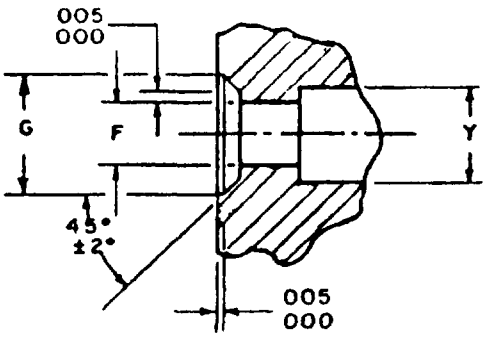

DETAIL A SOCKET ENTRY

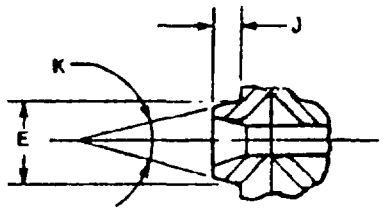

DETAIL B PIN BARRIER

Contact size	Detail A			Detail B		
	F dia	G dia	Y dia	E dia	J	K
22 1/ 22D 22M 1/	038 035	.067 063	0665 0640	077 069	040 030	28° 26°
20	052 .049	089 085	0860 0830	099 091	040 030	28° 26°
16	074 071	112 108	1210 1180	122 114	040 030	28° 26°
12	106 103	144 140	1690 1660	154 146	040 030	28° 26°

1/ Inactive for new design

Inches	mm	Inches	mm	Inches	mm	Inches	mm
000	0 00	0640	1 626	0860	2 184	1180	2 997
005	0 13	0665	1 688	089	2 26	1210	3 073
030	0 76	067	1 70	091	2 31	122	3 10
035	0 89	069	1 75	099	2 51	140	3 56
038	0 97	071	1 80	103	2 62	144	3 66
040	1 02	074	1 88	106	2 69	146	3 71
049	1 24	077	1 96	108	2 74	154	3 91
052	1 32	0830	2 108	112	2 84	1660	4 216
063	1 60	085	2 16	114	2 90	1690	4 293

NOTES
1. Dimensions are in inches
2. Metric equivalents are given for general information only
3. Detail A is not applicable to hermetic or thru-bulkhead receptacles

FIGURE 13a Interface design (series I and II)

Source: https://assist.dla.mil -- Downloaded: 2016-11-16T13:24Z
Check the source to verify that this is the current version before use.

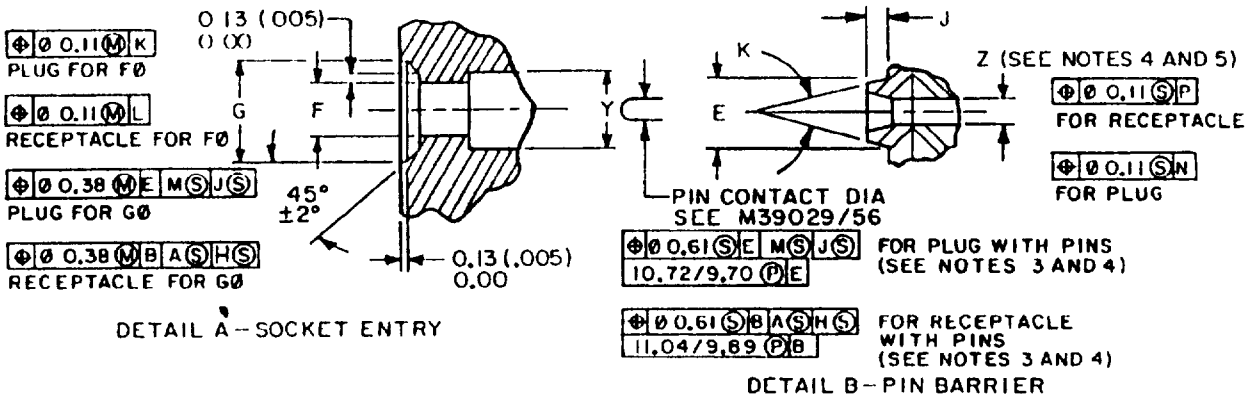

Contact size	Detail A			Detail B		
	F dia	G dia	Y dia	E dia	J	K
22 1/ 22D	0 97 (038)	1 70 (067)	1 689 (0665)	1 96 (077)	1 02 (040)	28°
22M 1/	0 89 (035)	1 60 (063)	1 626 (0640)	1 75 (069)	0 76 (030)	26°
20	1.32 (052)	2 26 (089)	2 184 (0860)	2 51 (099)	1 02 (040)	28°
	1 24 (049)	2 16 (085)	2.108 (.0830)	2 31 (091)	0 76 (030)	26°
16	1 88 (074)	2 84 (112)	3 073 (1210)	3 10 (122)	1 02 (040)	28°
	1 80 (071)	2 74 (108)	2 997 (1180)	2 90 (114)	0 76 (030)	26°
20	2 69 (106)	3.66 (144)	4 293 (1690)	3.91 (154)	1.02 (.040)	28°
	2 62 (103)	3.56 (140)	4.216 (1660)	3 71 (146)	0 76 (030)	26°

1/ Inactive for new design

NOTES.
1. Dimensions are in millimeters, inch equivalents are in parentheses.
2. Detail A is not applicable to hermetic or thru-bulkhead receptacles.
3. Position tolerance is for pin contact only.
4. See figures 4 and 7 for datums A, B, D, E, H, J, K, L, M, N, and P.
5. Z is undefined for pin contact in pin insert.

FIGURE 13b Interface design (series IV)

Source: https://assist.dla.mil -- Downloaded: 2016-11-16T13:24Z
Check the source to verify that this is the current version before use.

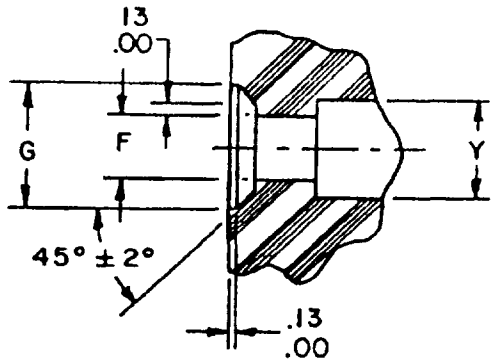

DETAIL A SOCKET ENTRY

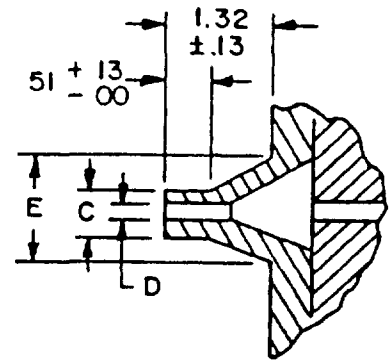

DETAIL B PIN BARRIER

Contact size	Detail A		Detail B		
	F dia	G dia	E dia	C dia	D dia max
22D	0 97 (0 04) 0 89 (0 04)	1 70 (0 07) 1 60 (0 06)	1.88 (0 07) 1 75 (0 07)	1 35 (0 05) 1 27 (0 05)	0 71 (0 03)
20	1 32 (0 05) 1 24 (0 05)	2 26 (0 09) 2 16 (0 08)	2 44 (0.09) 2 31 (0 09)	1 91 (0 07) 1 83 (0 07)	0 97 (0 03)
16	1 88 (0 07) 1 80 (0 07)	2 84 (0 11) 2 74 (0 11)	3 02 (0 12) 2 90 (0 11)	2 49 (0 10) 2 41 (0 09)	1 52 (0 06)
12	2 69 (0 10) 2 62 (0 10)	3 66 (0 14) 3 56 (0 14)	3 84 (0 15) 3 71 (0 14)	3 30 (0 13) 3 23 (0 12)	2 34 (0 09)
10	3 48 (0 13) 3 40 (0 13)	4 45 (0 17) 4 34 (0 17)	4 62 (0 18) 4 50 (0 17)	4 09 (0 16) 4 01 (0 16)	3 12 (0 12)
8 Triax	5.84 (0 23) 5 77 (0 23)	6 81 (0 26) 6 71 (0 26)	7 06 (0 27) 6 93 (0 27)	6.50 (0 25) 6 38 (0 25)	5 49 (0 21)

NOTES
1 Dimensions are in millimeters
2 Inch equivalents are in parentheses
3 Detail A is not applicable to hermetic or thru-bulkhead receptacles

FIGURE 14 Interface design (series III)

Source: https://assist.dla.mil -- Downloaded: 2016-11-16T13:24Z
Check the source to verify that this is the current version before use.

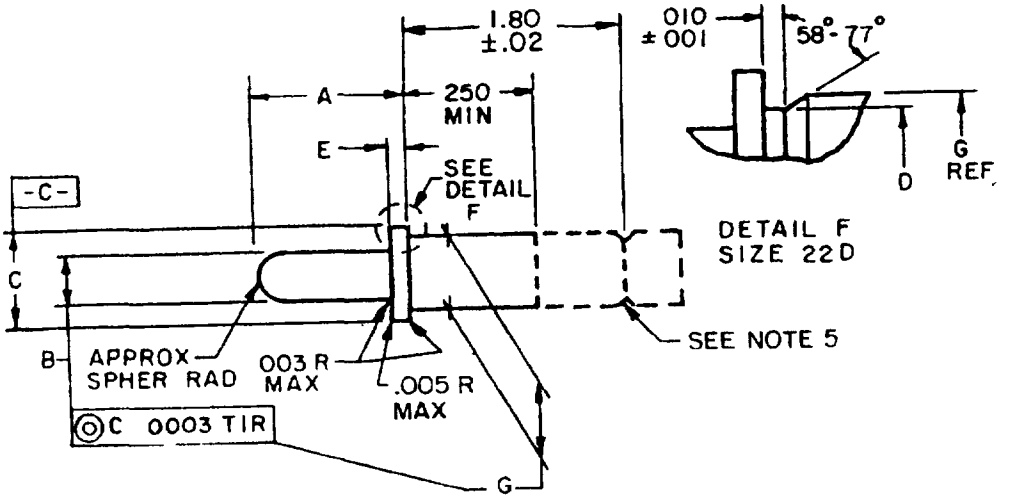

Inches	mm
0002	0 005
0003	0 010
0005	0 013
001	0 03
003	0 08
005	0 13
010	0 25
02	0 5
0295	0 749
0330	0 838
0390	0 991
0410	1 041
0480	1 219
0600	1 524
0615	1 562
0700	1 778
0910	2 311
0930	2 362
1030	2 616
1240	3 15
1270	3 226
1510	3 835
1790	4 547
2130	5 41
2170	5 51
2380	6 05
250	6 35
2760	7 01
2950	7 493
1 80	45 7

Contact size	A + 0005 - 0000	B dia + 0002 - 0000	C dia + 0002 - 0000	D dia + 0000 - 0002	E + 0000 - 0002	G dia + 0000 - 0002
22D	2950	0295	0600	0410	0330	0480
20		0390	0910	---		0700
16		0615	1270	---		1030
12		0930	1790	---		1510
10		1240	2380	---		2130
8 triax		2170	3110	---		2760

NOTES
1. Dimensions are in inches
2. Metric equivalents are given for general information only
3. Material Hardened tool steel
4. Finish 32 microinches polished
5. Design of rear extension is optional, but must have a groove provided as indicated

FIGURE 15 Test gauge, pin, gauge location, and retention (all series)

Source: https://assist.dla.mil -- Downloaded: 2016-11-16T13:24Z
Check the source to verify that this is the current version before use.

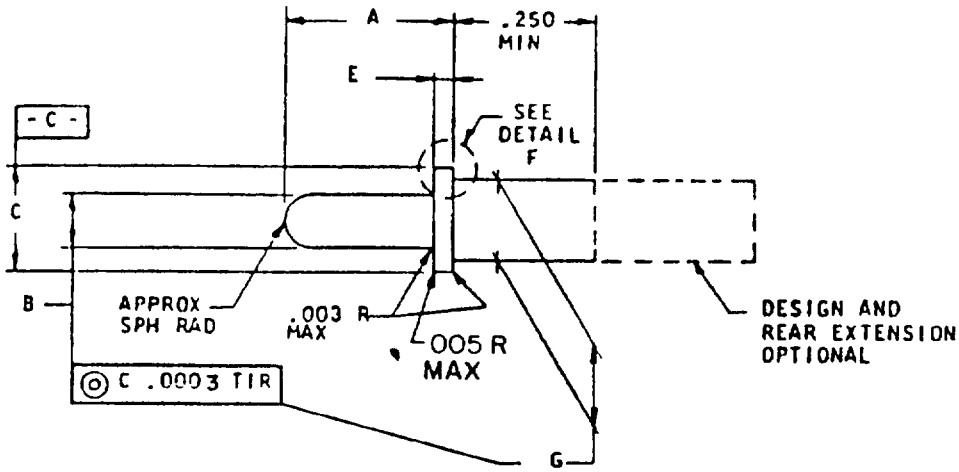

Inches	mm
0002	0 005
0003	0.010
0005	0 013
001	0 03
003	0 08
.005	0.13
010	0.25
0290	0 737
0295	0.749
0390	0 991
0410	1 041
0480	1 219
.0600	1.524
0615	1 562
0700	1 778
0910	2 311
.0930	2 362
1030	2.616
1240	3 15
1270	3 226
1510	3 835
1790	4 547
2130	5 41
2170	5 51
2380	6 05
250	6 35
2760	7 01
3000	7 620
3110	7 620

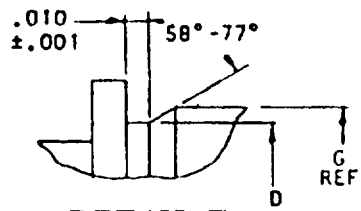

DETAIL F
SIZE 22D

Contact size	A + 0005 - 0000	B dia + 0002 - 0000	C dia + 0002 - 0000	D dia + 0000 -.0002	E + 0000 -.0002	G dia + 0000 - 0002
22D	3000	0295	0600	.0410	.0290	0480
20		0390	0910	---		0700
16		0615	1270	---		1030
12		.0930	1790	---		1510
10		1240	2380	---		2130
8 triax		2170	3110	---		2760

NOTES
1 Dimensions are in inches
2 Metric equivalents are given for general information only
3 Material Hardened tool steel
4 Finish 32 microinches polished

FIGURE 16 Test gauge, pin, gauge location (all series)

Source: https://assist.dla.mil -- Downloaded: 2016-11-16T13:24Z
Check the source to verify that this is the current version before use.

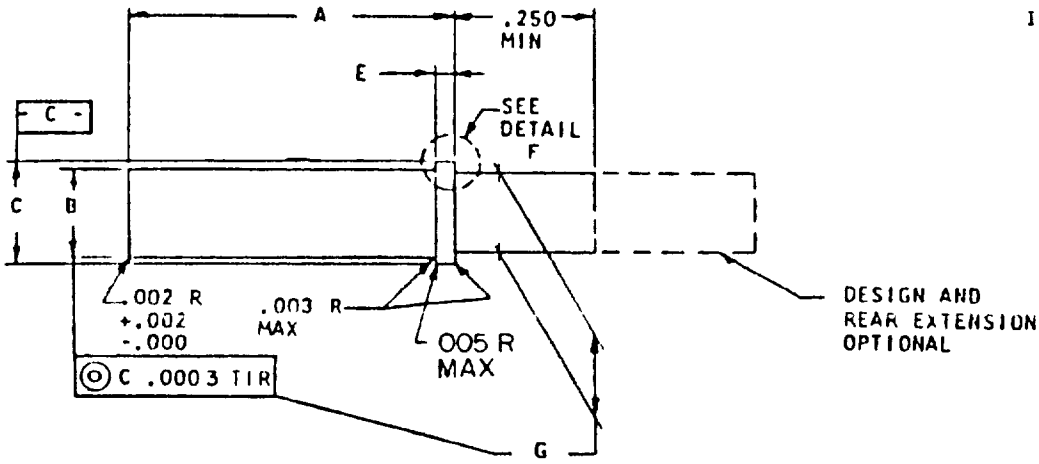

Inches	mm
0002	0 005
0003	0 010
0005	0 013
001	0 03
002	0 05
003	0 08
005	0 13
010	0 25
0330	0 838
0410	1 041
0480	1 219
0600	1 524
0700	1 778
0770	1 956
0910	2 311
1030	2 616
1120	2 845
1270	3 226
.1510	3 835
1600	4 064
1790	4 547
2130	5 41
2190	5 56
2380	6 05
250	6 35
2760	7 01
2870	7 29
3110	7 90
6260	15 900
6310	16 03

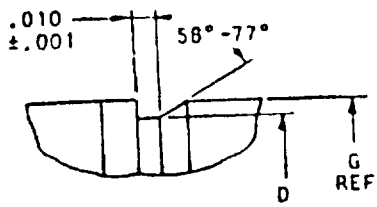

DETAIL F
SIZE 22D

Contact size	A + 0005 - 0000	B dia + 0002 -.0000	C dia + 0002 - 0000	D dia + 0000 - 0002	E + 0000 - 0002	G dia + 0000 - 0002
22D	6260	0600	0600	0410	---	0480
20		0770	0910	---	0330	0700
16		1120	1270	---		1030
12		1600	1790	---		1510
10		2190	2380	---		2130
8 triax	6310	2870	3110	---		2760

NOTES
1 Dimensions are in inches
2 Metric equivalents are given for general information only
3 Material Hardened tool steel
4 Finish 32 microinches polished

FIGURE 17 Test gauge, socket, retention (series I, III, and IV)

Source: https://assist.dla.mil -- Downloaded: 2016-11-16T13:24Z
Check the source to verify that this is the current version before use.

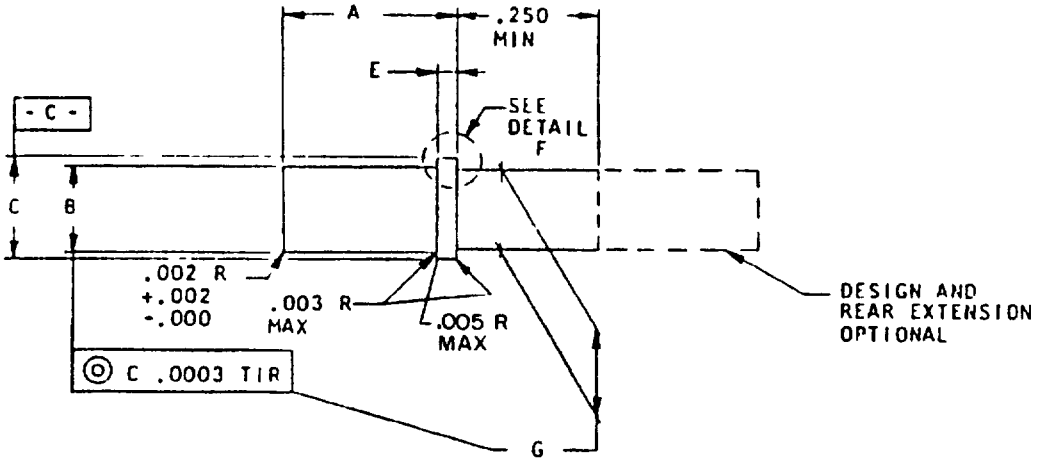

Inches	mm
0002	0 005
0003	0 010
0005	0 013
.001	0 03
.002	0 05
003	0 08
005	0 13
010	0 25
0330	0 838
0410	1 041
0480	1 219
0600	1 524
0700	1.778
0770	1.956
0910	2 311
1030	2 616
1120	2 845
1270	3 226
1510	3.835
1600	4 064
1790	4 547
250	6.35
2890	7 341

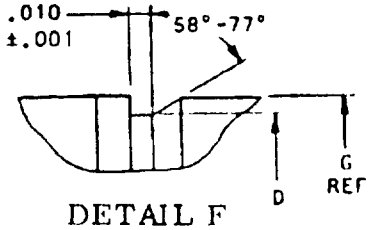

DETAIL F
SIZE 22D

Contact size	A + 0005 - 0000	B dia + 0002 - 0000	C dia + 0002 - 0000	D dia + 0000 - 0002	E + 0000 - 0002	G dia + 0000 - 0002
22D	2890	0600	0600	0410	---	0480
20		0770	0910	---	0330	0700
16		1120	1270	---	.	1030
12	.	1600	1790	---	.	1510

NOTES
1 Dimensions are in inches
2 Metric equivalents are given for general information only
3 Material Hardened tool steel
4 Finish 32 microinches polished

FIGURE 18 Test gauge, socket, retention (series II)

Source: https://assist.dla.mil -- Downloaded: 2016-11-16T13:24Z
Check the source to verify that this is the current version before use.

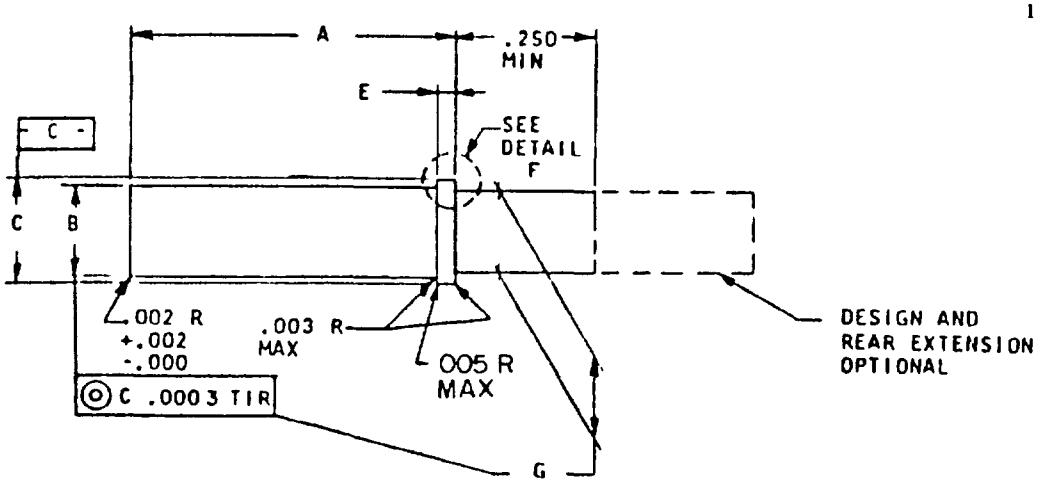

Inches	mm
0002	0 005
0003	0 010
0005	0 013
001	0 03
002	0 05
003	0 08
005	0 13
010	0 25
0330	0 838
0410	1 041
0480	1 219
0600	1 524
0700	1 778
0770	1.956
0910	2 311
1030	2 616
.1120	2.845
1270	3 226
1510	3 835
1600	4 064
1790	4 547
2130	5 41
2190	5 56
2380	6 05
250	6 35
2760	7 01
2870	7 29
5850	14 859
5900	14 99

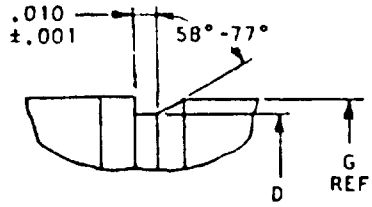

DETAIL F
SIZE 22D

Contact size	A + 0005 - 0000	B dia + 0002 - 0000	C dia + 0002 - 0000	D dia + 0000 - 0002	E + 0000 - 0002	G dia + 0000 - 0002
22D	5850	0600	0600	.0410	---	0480
20		0770	0910	---	0330	0700
16		1120	1270	---		1030
12		1600	1790	---		1510
10		2190	2380	---		2130
8 triax	5900	2870	3110	---		2760

NOTES
1. Dimensions are in inches
2. Metric equivalents are given for general information only
3. Material Hardened tool steel
4. Finish 32 microinches polished
5. Dimension A conforms to point of spring engagement (C and Y figures 1, 3, and 4)

FIGURE 19 Test gauge, Socket, gauge location (series I, III, and IV)

Source: https://assist.dla.mil -- Downloaded: 2016-11-16T13:24Z
Check the source to verify that this is the current version before use.

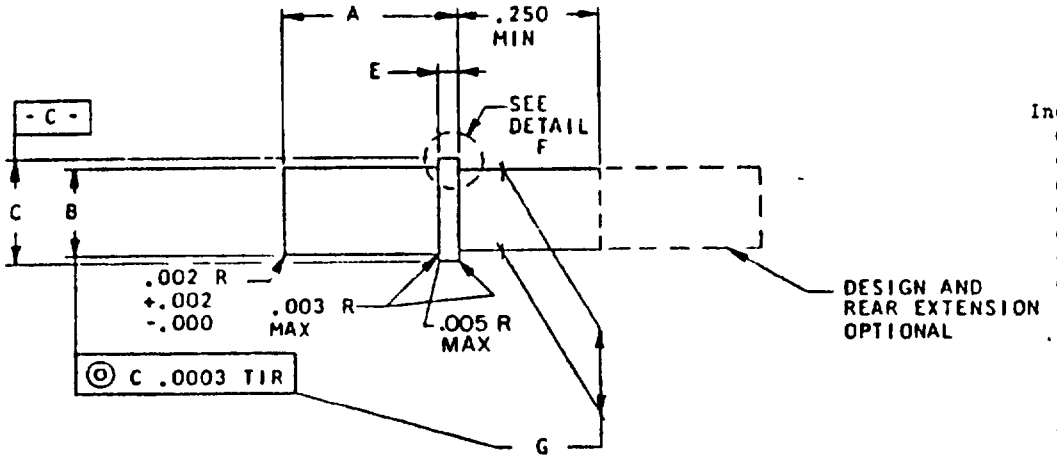

Inches	mm
0002	0 005
0003	0.010
0005	0 013
001	0 03
002	0 05
003	0 08
005	0 13
010	0 25
.0330	0.838
0410	1 041
0480	1 219
0600	1 524
0700	1.778
0770	1 956
0910	2 311
1030	2 616
1120	2 845
1270	3 226
1510	3 835
1600	4 064
1790	4 547
2480	6 299

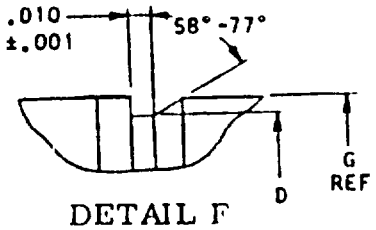

DETAIL F
SIZE 22D

Contact size	A + 0005 - 0000	B dia + 0002 - 0000	C dia + 0002 - 0000	D dia + 0000 - 0002	E +.0000 - 0002	G dia + 0000 - 0002
22D	2480	0600	0600	0410	---	0480
20	"	0770	0910	---	0330	0700
16	"	1120	1270	---	"	1030
12	"	1600	1790	---	"	1510

NOTES
1 Dimensions are in inches
2 Metric equivalents are given for general information only
3 Material Hardened tool steel
4 Finish 32 microinches polished
5 Dimension A conforms to point of spring engagement (C and Y, figure 2)

FIGURE 20 Test gauge, socket, gauge location (series II)

Source: https://assist.dla.mil -- Downloaded: 2016-11-16T13:24Z
Check the source to verify that this is the current version before use.

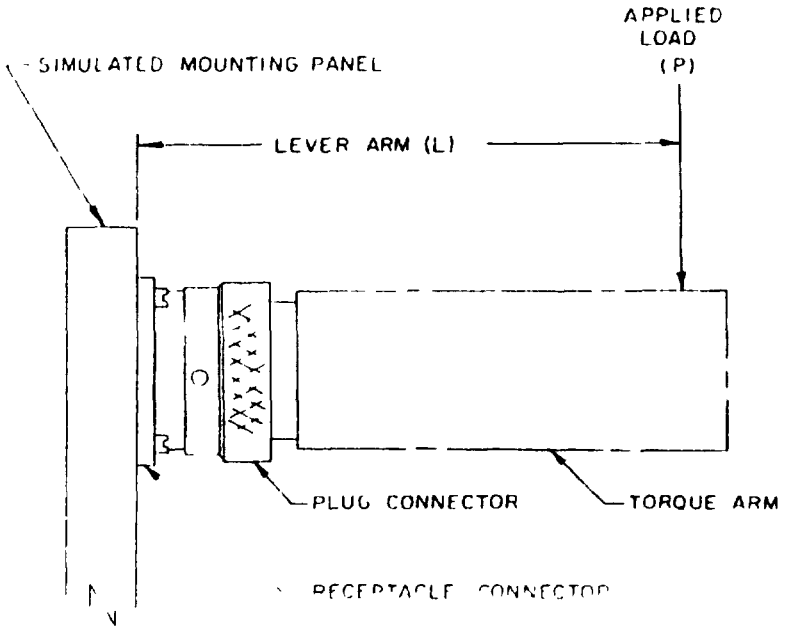

FIGURE 21. External bending moment test setup

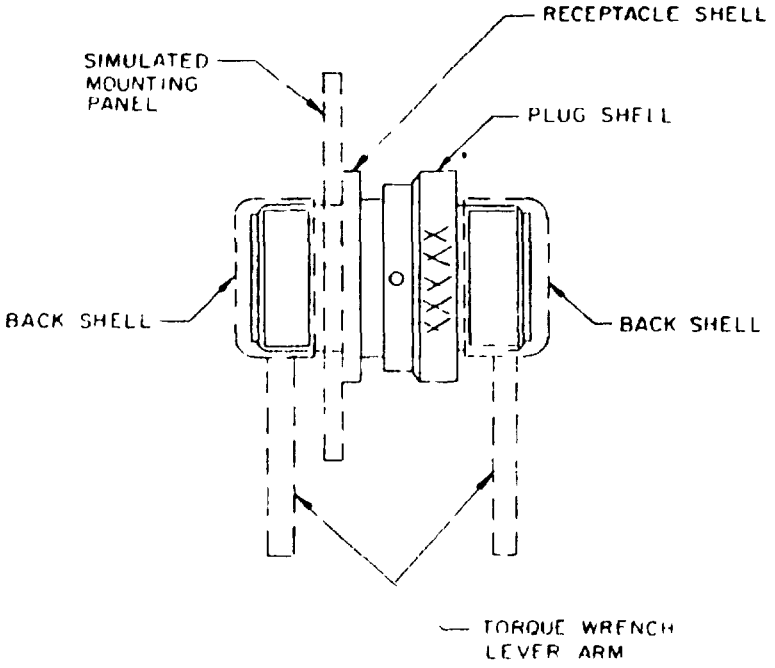

FIGURE 22 Rear accessory thread strength test setup

Source: https://assist.dla.mil -- Downloaded: 2016-11-16T13:24Z
Check the source to verify that this is the current version before use.

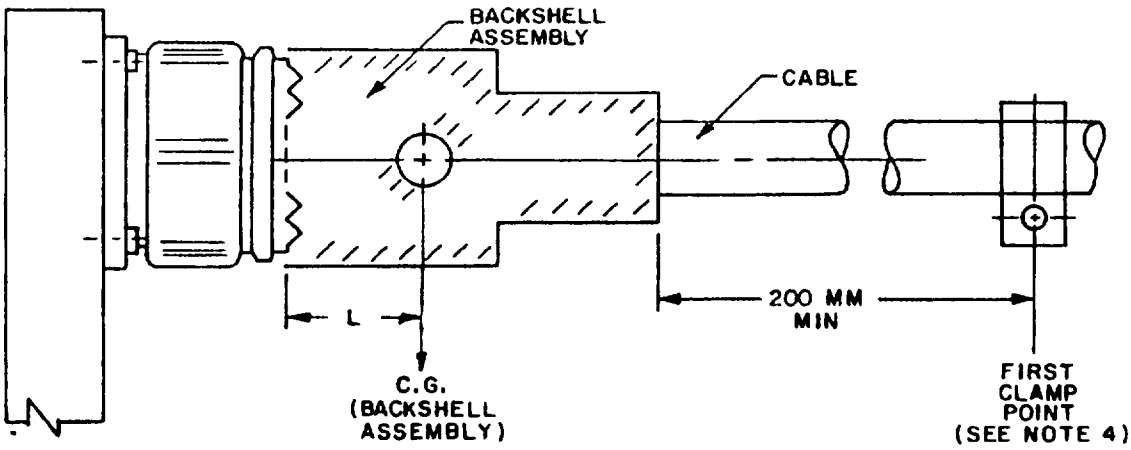

Shell size	L (mm) root to C G + 10% - 0%	Wt (kg) backshell Assembly + 10% - 0%
9	15.24	05
11	17.78	06
13	19.05	.07
15	19 05	09
17	19 05	11
19	22 86	18
21	22 86	22
23	23 37	25
25	23 37	31

NOTES

1. Dimensions are in millimeters
2. Shape of test accessory is optional
3. The test accessory may include a strain relief clamp
4. For series III, clamp point to be located on vibration table, and cable weight between rear of grommet and tie down clamp point to be considered a portion of the backshell assembly weight Clamp point for series I and IV is to be on nonvibrating member

FIGURE 23 Vibration test accessory (series I, III, and IV)

Source: https://assist.dla.mil -- Downloaded: 2016-11-16T13:24Z
Check the source to verify that this is the current version before use.

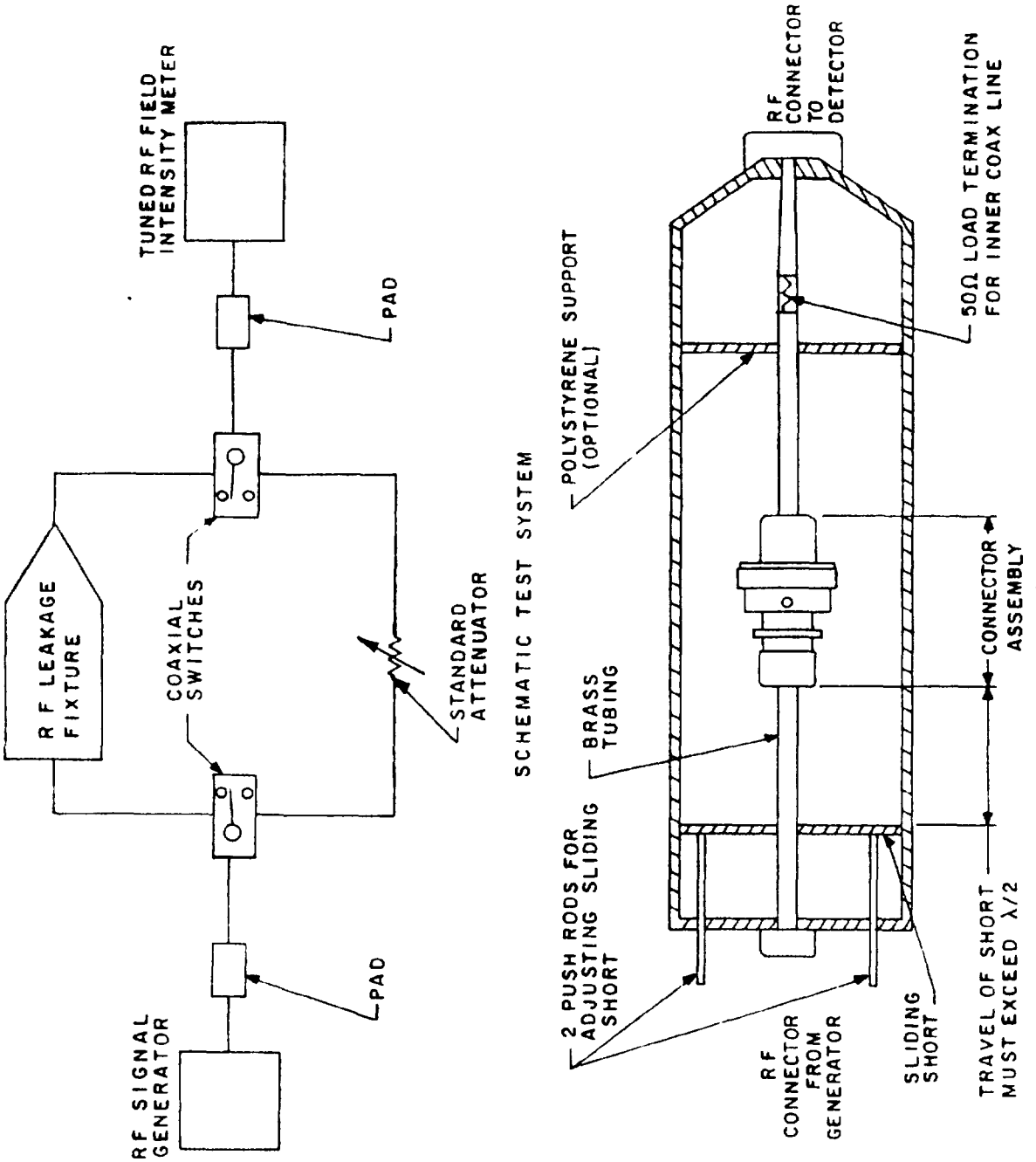

FIGURE 24. RFI leakage test fixture.

Source: https://assist.dla.mil -- Downloaded: 2016-11-16T13:24Z
Check the source to verify that this is the current version before use.

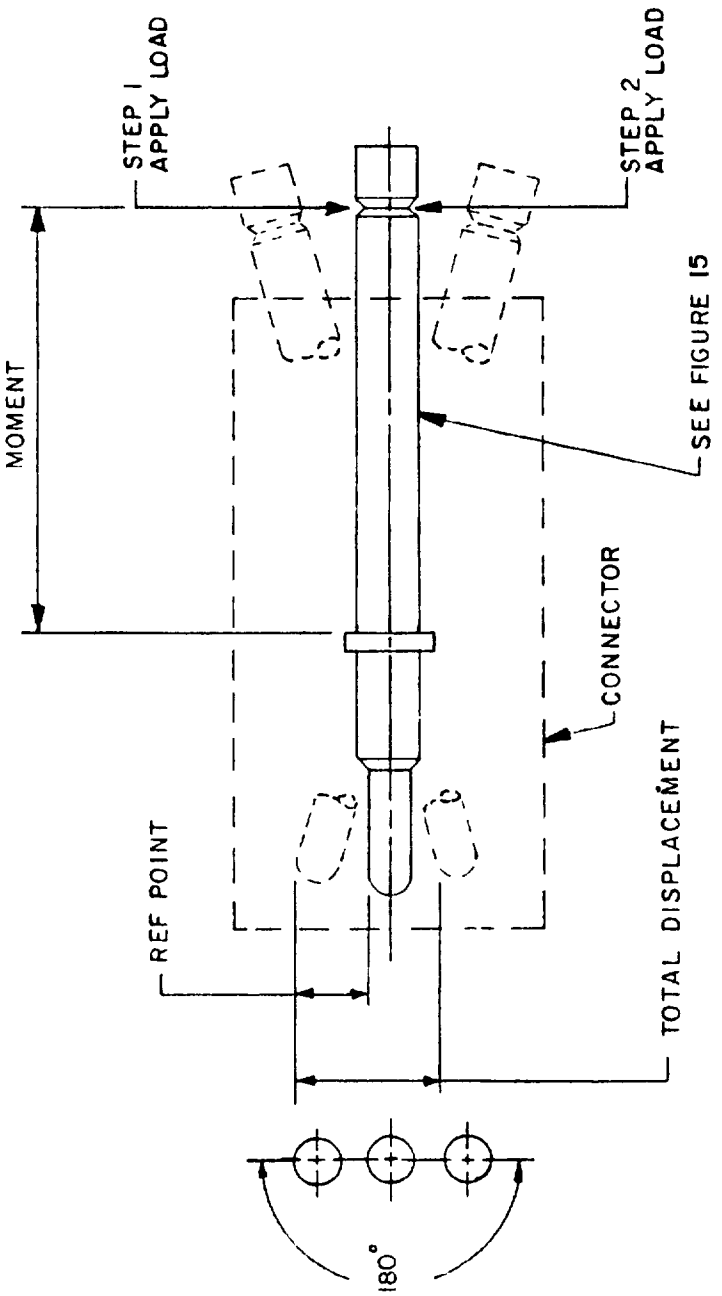

Step 1 - Apply load to determine reference point.
Step 2 - Apply load to opposite direction (180°) and measure total displacement.

FIGURE 25. Pin contact stability test.

Source: https://assist.dla.mil -- Downloaded: 2016-11-16T13:24Z
Check the source to verify that this is the current version before use.

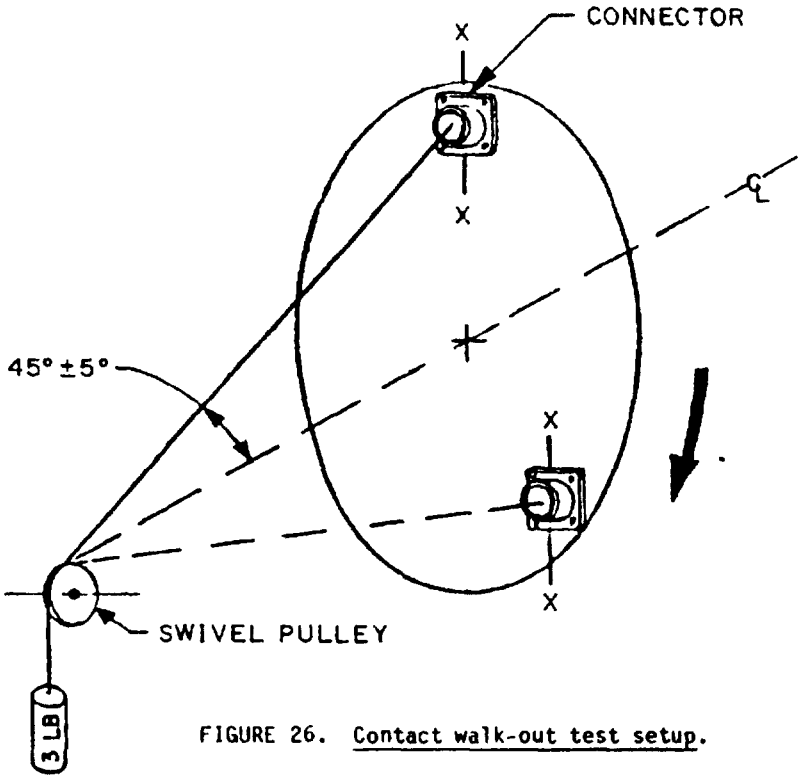

FIGURE 26. Contact walk-out test setup.

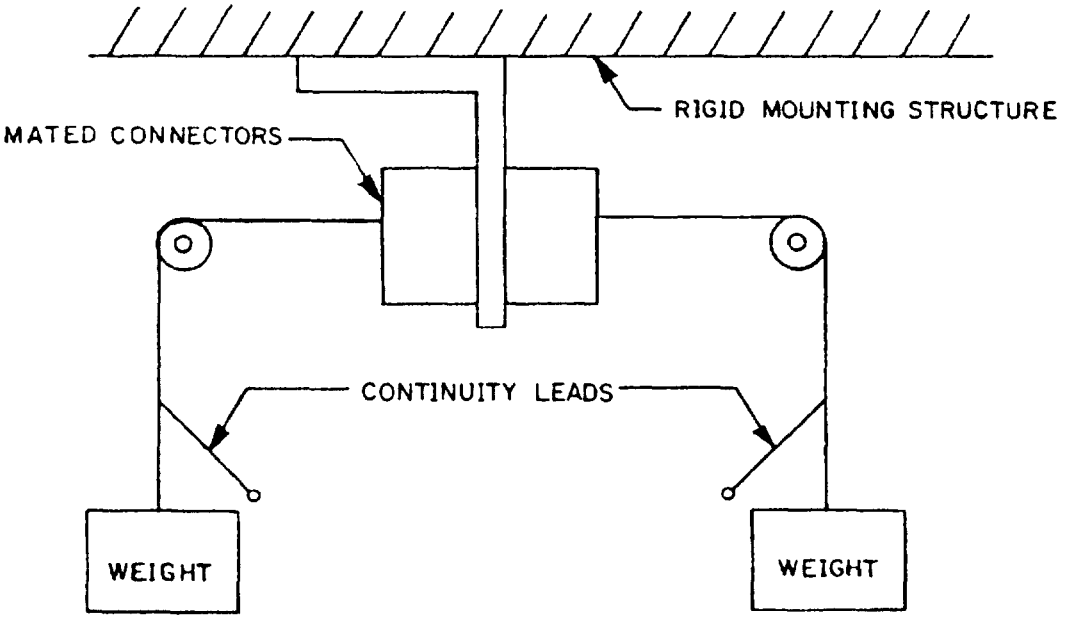

FIGURE 27. Typical fixturing for temperature life with contact loading (orientation optional).

Source: https://assist.dla.mil -- Downloaded: 2016-11-16T13:24Z
Check the source to verify that this is the current version before use.

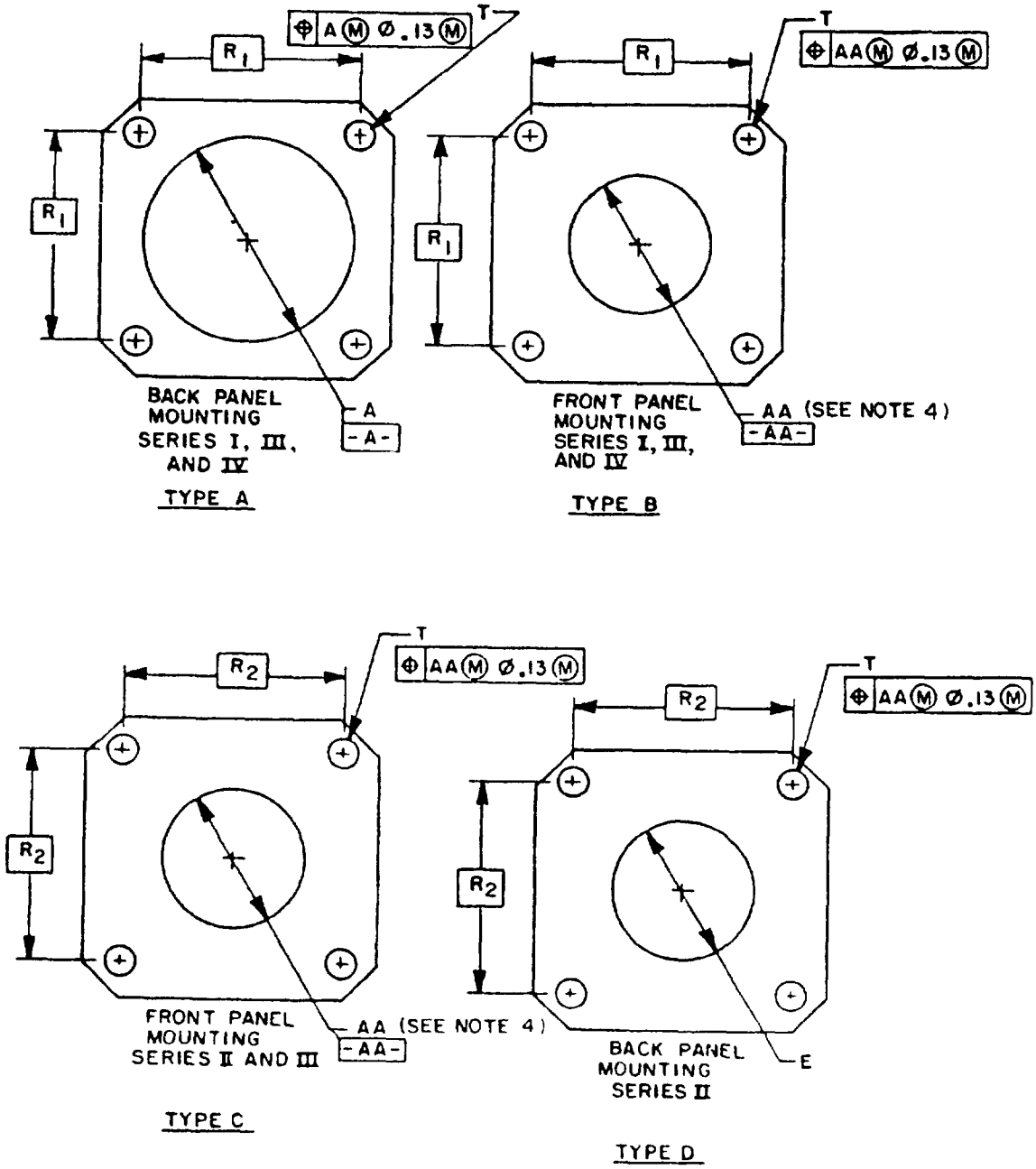

FIGURE 28. Recommended panel dimensions.

Source: https://assist.dla.mil -- Downloaded: 2016-11-16T13:24Z
Check the source to verify that this is the current version before use.

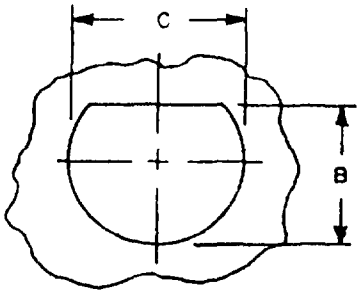

JAM NUT MOUNTING SERIES I & III CRIMP AND HERMETIC, AND SERIES IV HERMETIC

TYPE E

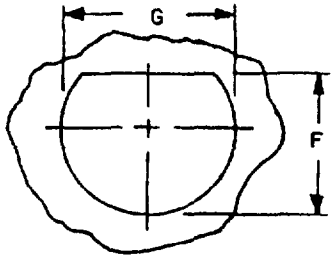

JAM NUT MOUNTING SERIES II CRIMP AND HERMETIC, AND SERIES IV CRIMP

TYPE F

Shell size	A dia min	AA dia min	B + 00 - 25	C + 25 - 00	E dia min	F + 00 - 25	G + 25 - 00	R 1	R 2	T dia ± 13
8-9	16 66 (65)	13 11 (51)	17 02 (670)	17 78 (700)	14 15 (55)	21 08 (830)	22 48 (885)	18.26 (71)	15 09 (59)	3 25 (13)
10-11	20 22 (80)	15 88 (62)	19 59 (770)	20 96 (825)	17 32 (68)	24 26 (955)	25 65 (1 010)	20 62 (80)	18 26 (71)	
12-13	23 42 (91)	19 05 (74)	24 26 (955)	25 65 (1 010)	21 69 (.85)	27 56 (1 085)	28 83 (1.135)	23 01 (90)	20 62 (80)	-
14-15	26 59 (1 04)	23 01 (90)	27 56 (1 085)	28 83 (1 135)	24 87 (97)	30 73 (1 210)	32 01 (1 260)	24 61 (96)	23 01 (90)	-
16-17	30 96 (1 21)	25 81 (1 01)	30 73 (1 210)	32 01 (1 260)	28.04 (1 09)	33 91 (1 335)	35.18 (1 385)	26.97 (1 05)	24 61 (96)	-
18-19	32 94 (1 28)	28 98 (1 13)	33 91 (1 335)	35 18 (1 385)	31 22 (1 22)	37 08 (1 460)	38 35 (1 510)	29 36 (1 14)	26 97 (1 05)	
20-21	36 12 (1 41)	32 16 (1 25)	37 08 (1 460)	38 35 (1 510)	34.39 (1 34)	40 26 (1 585)	41 53 (1 635)	31 75 (1 24)	29 36 (1 14)	-
22-23	39 29 (1 53)	34 93 (1 36)	40 26 (1 585)	41 53 (1 635)	37 57 (1 47)	43 43 (1 710)	44 70 (1 760)	34 93 (1 36)	31 75 (1 24)	3 91 (15)
24-25	42 47 (1 66)	37 69 (1 47)	43 43 (1 710)	44 70 (1 760)	40 74 (1 59)	46 61 (1 835)	47 88 (1 885)	38 10 (1 48)	34 93 (1 36)	3 81 (15)

NOTES
1. Dimensions are in millimeters
2. Inch equivalents are in parentheses
3. Inch equivalents are given for general information only
4. AA minimum is the recommended clearance for connectors less accessories and having skirt diameters no larger than the metric thread illustrated on figure 10 (series III connector interface dimensions)

FIGURE 28 Recommended panel dimensions - Continued

Source: https://assist.dla.mil -- Downloaded: 2016-11-16T13:24Z
Check the source to verify that this is the current version before use.

Recommended jam nut torque values			
Series II		Series I, III, and IV	
Shell size	Inch-pounds	Shell size	Inch-pounds
8	46/50	9	30/36
10	55/60	11	40/46
12	70/75	13	55/60
14	80/85	15	70/75
16	90/95	17	80/85
18	100/110	19	90/95
20	110/120	21	100/110
22	120/130	23	110/120
24	140/150	25	120/130

FIGURE 28 Recommended panel dimensions - Continued

Source: https://assist.dla.mil -- Downloaded: 2016-11-16T13:24Z
Check the source to verify that this is the current version before use.

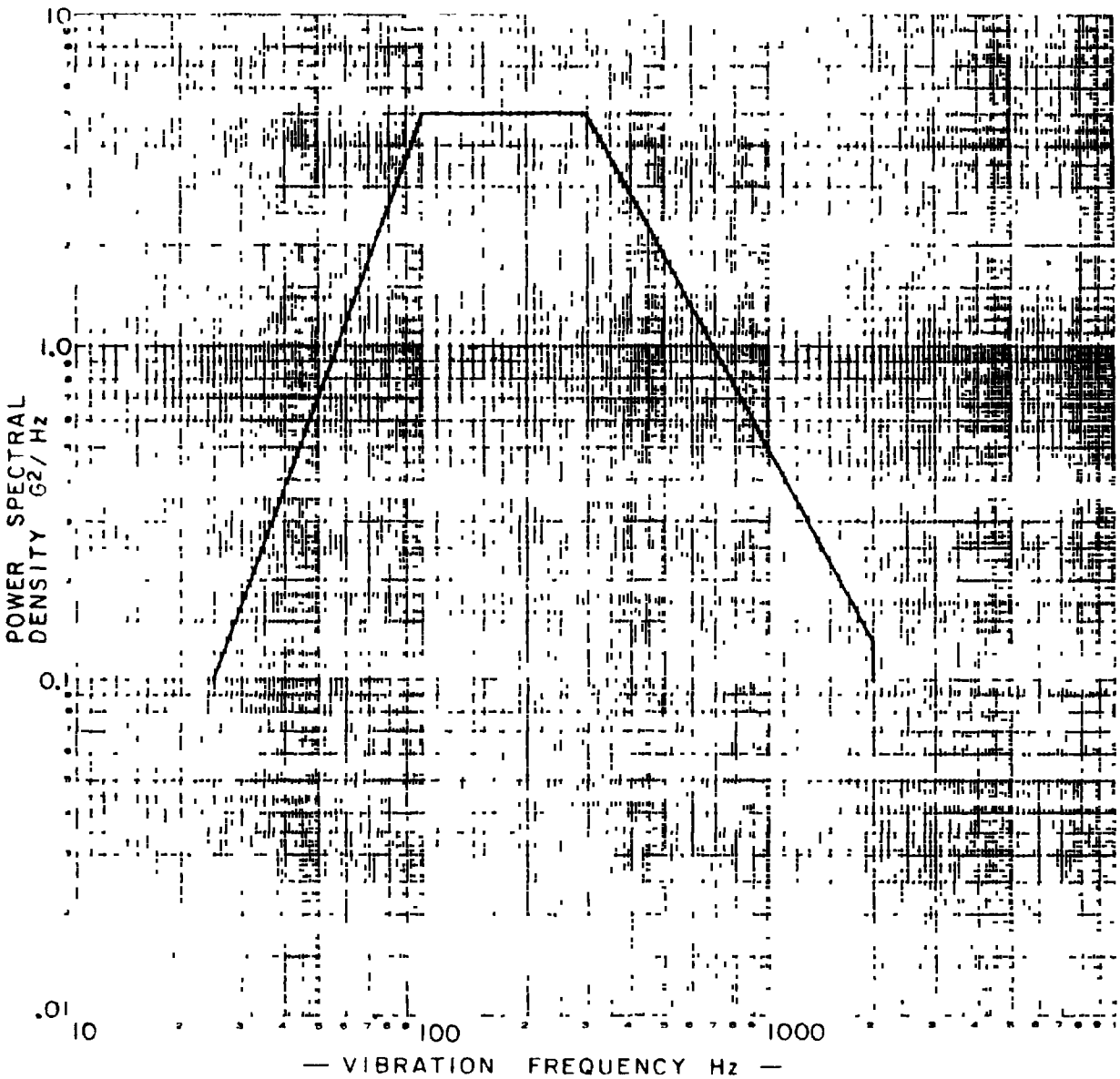

FIGURE 29. Random vibration (series I, III, and IV).

Source: https://assist.dla.mil -- Downloaded: 2016-11-16T13:24Z
Check the source to verify that this is the current version before use.

6 6 Patent notice The Government has a royalty-free license under the following listed patents and application for patent, for the benefit of manufacturers of items covered by this specification, whether for the government or indirect shipment to the government, the overriding principle of royalty-free license exists That is adoption of a design for military specification or the granting of qualification to a supplier is conditional upon the existence of a royalty-free license from the designer or supplier

US patent number	US patent application serial number
3,003,135	558,958
3,101 229	
3,848,950	

6 7 Part or Identifying Number (PIN) The PIN should be structured in accordance with 3 43 in section 3

6 8 International standardization agreement Certain provisions of this specification are the subject of international standardization agreement, NEPR 99 When amendment, revision, or cancellation of this specification is proposed which will affect or violate the international agreement concerned, the preparing activity will take appropriate reconciliation action through international standardization channels including departmental standardization offices, if required

6 9 Subject term (key word) listing
Connectors
Circular
Plugs
Receptacle
Metal
Composite
Space grade
High density
Quick disconnect

6 10 Changes from previous issue Marginal notations are not used in this revision to identify changes with respect to the previous issue, due to the extensiveness of the changes

CONCLUDING MATERIAL

Custodians
Air Force - 85
Army - CR
Navy - AS
NASA - NA

Review activities
Air Force - 11, 15, 17, 99
Army - AR, MI
Navy - EC, MC OS
DLA - ES

Preparing activity
Air Force - 85

Agent
DLA - ES

(Project 5935-3740)

Source: https://assist.dla.mil -- Downloaded: 2016-11-16T13:24Z
Check the source to verify that this is the current version before use.