NOT MEASUREMENT SENSITIVE

MIL-M-49503A(TM)
1 OCTOBER 1993

SUPERSEDING
MIL-M-49503(TM)
23 JANUARY 1991

MILITARY SPECIFICATION

MANUALS, TECHNICAL: GENERAL STYLE AND FORMAT, TEST PROGRAM SETS FOR AUTOMATIC TEST EQUIPMENT

This specification is approved for use by the Department of the Army, and is available for use by all Departments and Agencies of the Department of Defense.

1. **SCOPE.**

1.1 **Purpose**. This specification contains the detailed requirements for the preparation of operator instructions and operational features required in Test Program Sets for all equipment.

1.2 **Applicability**. Generally, each item specified herein will be included in the test program unless the item is not applicable to the particular equipment or an exception has been granted by the contracting activity. Additional information and instructions deemed necessary for a specific item of equipment, but not specified herein, will be included in the test program for that item of equipment, if authorized by the contracting activity.

Beneficial comments (recommendations, additions, deletions) and anyn pertinent data which may be used in improving this document should be addressed to: USAMC Logistics Support Activity, ATTN: AMXLS-APP, Redstone Arsenal, AL 35898-7466 by using the self addressed Standardization Document Improvement Proposal (DD Form 1426) appearing at the end of this document or by letter.

AMSC NO F6971 **AREA TMSS**

DISTRIBUTION STATEMENT A. Approved for public release: distribution is unlimited.

Source: https://assist.dla.mil -- Downloaded: 2016-12-10T23:33Z
Check the source to verify that this is the current version before use.

1.3 **Examples/figures**. The figures used in this specification are examples only. The text of this specification takes precedence over examples.

2. APPLICABLE DOCUMENTS.

2.1 Government documents.

2.1.1 **Specifications, standards, and handbooks**. The following specifications, standards, and handbooks, form a part of this specification to the extent specified herein. Unless otherwise specified, the issues of these documents shall be those listed in the issue of the Department of Defense Index of Specifications and Standards (DODISS) and supplement thereto, cited in the solicitations.

SPECIFICATIONS

MILITARY

MIL-M-38784	Manuals, Technical: General Style and Format Requirements
MIL-I-45208	Inspection System Requirements
MIL-M-85337	Manuals, Technical: Quality Assurance Program, Requirements for

STANDARDS

MILITARY

DOD-STD-2167	Defense System: Software Quality Program
DOD-STD-2168	Defense System: Software Development
MIL-STD-12	Abbreviations for Use on Drawings, and in Specifications, Standards and Technical Documents
MIL-STD-129	Marking For Shipment and Storage
MIL-STD-334	Displayed Messages for Automatic Test Equipment
MIL-STD-2077	General Requirements for Test Program Sets

Source: https://assist.dla.mil -- Downloaded: 2016-12-10T23:33Z
Check the source to verify that this is the current version before use.

(Unless otherwise indicated, copies of federal and military standards, and handbooks, are available from Standardization Documents Order Desk, Building 4D, 700 Robbins Avenue, Philadelphia, PA 19111-5094.)

2.1.2 **Other government documents, drawings, and publications**. The following other Government documents, drawings, and publications, form a part of this specification to the extent specified herein. Unless otherwise specified, the issues are those cited in the solicitation.

AR 380-5	Department of the Army Information Security Program
DoD 5220.22-M	DoD Industrial Security Program

(Copies of specifications, standards, handbooks, drawings, publications, and other Government documents required by contractors in connection with specific acquisition functions should be obtained from the contracting activity or as directed by the contracting activity.)

2.2 **Non-Government publications**. The following document(s) form a part of this document to the extent specified herein. Unless otherwise specified, the issues of the documents which are DoD adopted are those listed in the issue of the DODISS cited in the solicitation. Unless otherwise specified, the issues of documents not listed in the DODISS are the issues of the documents cited in the solicitation (see paragraph 6.2).

IEEE-STD-716 (DoD adopted)	Common/Abbreviated Test Language for All Systems (C/ATLAS)
ATSM D3951 (DoD adopted)	Packaging, Commercial

(Non-Government standards and other publications are normally available from the organizations that prepare or distribute the documents. These documents also may be available in or through libraries or other informational services).

2.3 **Order of precedence**. In the event of a conflict between the text of this specification and the references cited herein, the text of this specification shall take precedence. Nothing in this specification, however, shall supersede applicable laws and regulations unless a specific exemption has been obtained.

Source: https://assist.dla.mil -- Downloaded: 2016-12-10T23:33Z
Check the source to verify that this is the current version before use.

3. REQUIREMENTS.

3.1 Operator/ATE Interface.

3.1.1 **Standard design**. A test program (TP) (see 6.5.4) shall be written so that:

a. the system is easy to operate.

b. the current status of the TP is evident to the operator.

c. the system responds to each operator input.

d. the next operation is easily determined.

3.1.2 **Software structure**. The TP structure shall provide context, consistency, and flexibility to the operator in executing the Test Program Set (TPS) (see 6.5.6).

3.1.3 **Display design**. The software structure and display design shall be a transparent interface between the operator and the task. The operator shall have the illusion of directly acting on the screen representations and the Unit Under Test (UUT) without interference from the TPS.

3.1.4 **Interface design objectives**. The interface design shall be understandable, learnable, controllable, mappable, responsive, tolerant, and flexable.

3.1.4.1 **Understandable**.

a. The operator shall be able to move through the various functions of the TP while maintaining and understanding the test.

b. Information shall be presented in clear representations.

c. There shall be a consistent use of terminology throughout the TP.

d. Information that is essential to making a decision or performing an action shall be given at one time.

3.1.4.2 **Learnable**. The TP software shall be designed:

a. to prevent errors to the extent possible.

b. to allow easy recovery from errors.

Source: https://assist.dla.mil -- Downloaded: 2016-12-10T23:33Z
Check the source to verify that this is the current version before use.

c. to display a help message or visual indication prompt to the user when he makes an input error.

d. to provide instructions at the appropriate time and place.

e. to provide the operator with a dominant, clearly marked path through the operational logic.

f. to reduce the demands on the operators' memory by providing "prompting" information at appropriate times.

3.1.4.3 **Controllable**. The TP shall promote the sense of operator control over the TP by:

a. keeping the operator informed as to what the test program is doing.

b. keeping the operator oriented as to where the test is, what test has been completed, and where the operator will be allowed to direct the test.

c. responding the same way to the same operator input.

d. ensuring that all system actions have a detectable cause.

3.1.4.4 **Mappable**. The TP shall provide routing information to the operator. It shall:

a. provide the operator instructions to get started.

b. provide clearly defined landmarks and routes.

c. provide continuity between landmarks.

d. never allow the operator to reach a "dead end" or loop, with no place to go or options to try.

e. keep the operator aware of progress in reaching his goal.

f. support forward and backward movement through the operational logic. Backward movement shall be restricted to multiple graphic screens or successful UUT adjustments which allow testing to resume at the original failure.

3.1.4.5 **Responsive**. The TP shall provide effective, consistent, timely, and meaningful feedback. The TP responses shall reflect what the test program is doing as well as system responses to operator actions.

Source: https://assist.dla.mil -- Downloaded: 2016-12-10T23:33Z
Check the source to verify that this is the current version before use.

3.1.4.6 **Tolerant**. The TP shall facilitate easy recovery from errors. Error handling support features such as "undo" commands, clear and constructive error messages, and help directories shall be used to recover from errors. The TP design shall include procedural verification. This verification shall identify instances where the operator may not have correctly performed a procedure, and prompt the operator to check the previous procedure before the test can continue.

3.1.4.7 **Flexible**. The TP shall be sensitive to the needs of operators and to the changing requirements of operators as they gain experience with the TP. Operator experience levels shall be recognized by providing selective shortcuts (menus) and/or defaults which will allow the operator greater flexibility in the utilization of the TP.

3.2 **Operator Interface Requirements**.

3.2.1 **Test Program Structure**. The test program structure shall be simple, logical, and consistent. The selection of the dialogue used in the TP shall support the design structure.

3.2.2 **Types of dialogue**. The types of dialogue that shall be used are:

a. question and answer.

b. menu selection.

c. function keys.

3.2.2.1 **Question and answer**. Questions shall be presented one at a time and shall not require the operator to answer more than one question at once. When the system must ask a series of questions, and the answer to the current question is dependent upon the answer to a previous question, answers to all questions within the series shall be displayed until all questions have been answered.

3.2.2.2 **Menu selection**.

a. Each menu display shall require only one selection by the operator.

b. The format of menu displays shall present only one option per displayed line.

Source: https://assist.dla.mil -- Downloaded: 2016-12-10T23:33Z
Check the source to verify that this is the current version before use.

c. The active area for menu option selection via touch screen shall be the area of the displayed option label. The selection of a menu option for a non-touch screen shall be accomplished by the operator positioning the cursor or mouse type pointer within the area to be selected (the displayed option label) and then pressing either "RETURN" or "ENTER" on the keyboard, or the left button of the mouse or trackball. If a mouse or trackball is not available, arrow keys on the keyboard shall be used to position an on screen pointer.

d. The menu display shall provide an immediate acknowledgment that an entry was made.

e. Menu options shall be phrased as commands to the test set (computer), and not as questions to the operator.

f. The displayed menu options working structure and syntax shall be consistent for all TPs independent of the defined elements and structure of the command language chosen.

g. Each option code shall represent the meaning of the option. Codes shall not consist of arbitrary alpha, numeric, or alpha numeric designations.

h. Menus shall display all options available at the current step in the test sequence.

i. All menu options shall be consistent in their wording, ordering, and location, so that they are readily distinguishable from any other information contained on the display.

j. Menu options shall be listed in a logical sequence or in descending order of frequency of use.

k. Menus shall be formatted to indicate related groups of options rather than an unrelated string of alternatives. Groups of related options shall be given a descriptive label that is distinctive in format from the option labels. Should there be any conflict between this paragraph and j (above), this paragraph takes precedence.

l. A hierarchic sequence of menu selection shall be provided rather than a single multi-page menu.

Source: https://assist.dla.mil -- Downloaded: 2016-12-10T23:33Z
Check the source to verify that this is the current version before use.

m. The hierarchic sequence shall provide a top level group of options which provide a consistent starting point for control entries. The structure shall provide immediate access to critical or frequently used options and minimize the number of steps required to complete the sequence. The structure shall also provide the operator with his position within the sequence structure.

n. Options that accomplish control entries shall be distinguished from options that branch to other menu frames.

3.2.2.3 **Function keys**.

a. Each function key shall be labeled to indicate the function(s) it performs. The labels shall be sufficiently descriptive to prevent operator confusion. Multifunction keys shall indicate to the operator which function is currently active.

b. Function keys shall perform their designated function with a single activation. The function of a key shall not change with repeated activations.

c. The TP shall provide an immediate acknowledgment of function key activation.

d. A key assigned a given function in one test shall be assigned the same function in all other tests.

3.2.2.4 **Displays**.

a. The TP shall be designed to display all the data that the operator needs at any step in the test sequence. Display screens shall not contain information that is not related to the current task. Data shall be sufficient as to not require the operator to recall data from previous displays.

b. Data shall be displayed in usable, consistent, and distinctive formats. Once a format has been devised, it shall be maintained to ensure consistent design of the displays. The operator shall not be required to transpose, compute, interpolate, or mentally translate data to other units, numbers, or languages.

c. The wording for test sequences and guidance messages shall be consistent, familiar, and task oriented. Verbs in guidance messages shall be imperative. See Appendix A for recommended terms.

Source: https://assist.dla.mil -- Downloaded: 2016-12-10T23:33Z
Check the source to verify that this is the current version before use.

unlimited.

d. Abbreviations shall be kept to a minimum. Words having five letters or less shall not be abbreviated except those established by standard practice e.g., "V" for volt. The abbreviations approved for use by this specification, based on MIL-STD-12, and MIL-STD-2077, for single words and word combinations, are listed in Appendix B.

3.2.2.5 **Conventional text**. Conventional text shall be used for data displays. Running text shall be displayed in upper and lower case using conventional punctuation and spacing between letters, words, sentences, and paragraphs. Paragraphs shall be separated by one blank line. Words shall not be broken between lines with a hyphen. Text shall be in the active voice.

3.2.2.6 **Titles**. Titles shall be displayed at the top of the screen.

a. Titles shall be in capital letters.

b. There shall least one blank line separating the title or header fr n body of the display. There shall be at least one b rating the main body of the display from the entries.

3.2.2.7 **Comma** es shall be displayed only on the s eserved command entries shal e screen.

a. Se ATE to perform th

operatc

as d

j

py

p

MILITARY SPECIFICATION

MANUALS, TECHNICAL:

GENERAL STYLE AND FORMAT

TEST PROGRAM SETS FOR AUTOMATIC TES

This specification is approved for use by the Army, and is available for use by Agencies of the Department

1. SCOPE.

1.1 **Purpose**. This specif requirements for the pr operational features equipment.

1.2 **Applica** be includ to the the

SUPERSEDING MIL-M-49503 23 JANUARY 1

MIL-M-49503A(1 OCTOBER 199

NC- SENS-

Source: https://assist.dla.mil -- Downloaded: 2016-12-10T23:33Z
Check the source to verify that this is the current version before use.

(6) Additional commands shall cause an action consistent with the represented command title and in accordance with the requirements established in this specification.

b. No text data shall be displayed in the reserved command area of the screen.

c. Reserved command entries shall be placed as follows:

(1) CONT at the left of the screen.

(2) EXIT at the right of the screen.

(3) PREV to the right of CONT.

(4) PRINT (if applicable) to the right of PREV.

(5) HELP to the left of EXIT.

(6) Additional commands shall be placed between the area of the PRINT and HELP command locations.

3.2.2.8 **Display coding**. Display coding shall be used to distinguish between different categories of displayed data. Consistent coding shall be used across displays as well as within displays. Bar, color, and flash coding are the types of coding that shall be used.

a. Bar coding. Bars shall be rectangular and extend horizontally. The width for menu type screens shall be not less than 9/16 inch (14 mm) nor more than 3/4 inch (19 mm), and for status screens not less than 5/16 inch (8 mm) nor more than 1/2 inch (13 mm). The length of the bar shall be dictated by the length of the message but in no instance shall the bar be less that 5 inches (127 mm), nor more than 7-1/2 inches (190 mm). For command entries, such as CONT, PREV, PRINT, HELP, and EXIT, the width shall be not less than 5/8 inch (16 mm) nor more than 3/4 inch (19 mm) and the length not less than 1 1/8 inches (29 mm) nor more than one and 1-1/4 inch (32 mm). Command entries shall be separated by a minimum of 1/16 inch (2 mm). Data on the screen shall be symmetrical and pleasant to the eye.

b. Color coding. Color coding shall be used when the operator must distinguish rapidly among several categories of data in complex, dense, or critical displays. The colors used shall be consistent throughout the TP. When color is used there shall be no more than 7 colors utilized. Colors shall be used, with provisions for monochrome, as follows:

Source: https://assist.dla.mil -- Downloaded: 2016-12-10T23:33Z
Check the source to verify that this is the current version before use.

(1) WARNINGS AND CAUTIONS.

(a) Red. The word "WARNING" shall be displayed in red and be surrounded by a red box, for monochrome, a warning (see paragraph 6.5.7) shall be displayed so that the word "WARNING" and its associated test are reverse imaged. The word "WARNING" shall appear in upper case an al line by itself. Text of the warning shall be centered and have the right and left margins indented to appear distinct from normal text.

(b) Yellow. The word "CAUTION" shall be displayed in yellow and underlined by a yellow line. For monochrome, the word "CAUTION" shall be boxed by a single line.

(c) White. Explanatory text for warnings and cautions shall be white, unless otherwise specified by the contracting activity.

(2) TEXT SCREENS.

(a) White. White shall be used for all text, to include the text in touch sensitive areas, and general display purposes. All touch sensitive areas shall turn white when touched to indicate activation.

(b) Black. Black shall be used as the primary background color for all screens. Also for text in activated touch screen areas and for areas with a light color background such as yellow or light blue.

(c) Dark blue. A dark blue background shall be used for all touch sensitive areas. Text in touch sensitive areas shall change to dark blue after activation and the background area turns white. For monochrome, the box shall be slash marked and reverse image when activated.

(d) Red. Red shall be used to indicate a warning. For monochrome, warnings shall be reverse imaged.

(e) Yellow. Yellow shall be used to indicate a caution. For monochrome, the word "CAUTION" shall be boxed by a single line.

(3) TEST SET UP SCREENS.

(a) Green. The ATE and Interconnecting Device (ICD) reciever box shall be green. For monochrome, the ATE and ICD receiver box shall contain a slash pattern.

Source: https://assist.dla.mil -- Downloaded: 2016-12-10T23:33Z
Check the source to verify that this is the current version before use.

(b) Yellow. The ICD (see paragraph 6.5.2) box shall be yellow. For monochrome, the ICD shall contain a cross-hatched pattern.

(c) White. Cables and cable connectors shall be white.

(d) Light blue. The UUT box shall be light blue. For monochrome, the UUT box shall be outlined by a dashed line.

(4) TEST STATUS SCREENS.

(a) Light blue. Item to be tested or test was bypassed shall be light blue. For monochrome, the item shall be underlined.

(b) Yellow. A yellow status bar shall indicate that the test is in progress. For monochrome, the status bar shall be dim.

(c) Green. When a test has passed, the status bar shall change from yellow to green. For monochrome, the status box shall clear. If the bar is the last bar on the screen, the screen shall remain on display for 3 to 10 seconds, after which the TP shall advance to the next screen.

(d) Red. When a test has failed, the status bar shall change from yellow to red (for monochrome from dim to reverse image) and remain red (reverse image) as the test continues. If the bar is the last bar on the screen, or the test must be interrupted as a result of the failure, then the screen shall remain on display for 3 to 10 seconds, after which the TP shall advance to the next screen.

c. Flash coding. Flash coding shall only be used when there is an urgent need to get the operator's attention. The text shall have a flashing underline but the text shall not flash. The rate of blinking shall be 3 to 5 flashes per second with a duty cycle of 50 percent. The operator shall be required to acknowledge flash messages before the test can proceed.

d. Alternate coding such as upper case lettering, underlining, indentation, image polarity, shading, and brightness contrast shall be used when the use of color is not possible due to equipment capabilities.

Source: https://assist.dla.mil -- Downloaded: 2016-12-10T23:33Z
Check the source to verify that this is the current version before use.

3.2.2.9 **Display generation**. The TP shall acknowledge the command execution whenever the operator requests a data display or a new display. This shall be accomplished by either performance of the requested action, or by an advisory message such as "PLEASE WAIT".

3.2.2.10 **Error messages**. Error messages shall be brief, specific and task oriented. The messages shall be constructive and neutral in tone. Messages that suggest a judgment of the operator's behavior shall not be used. The error message shall not imply blame to the operator nor attempt humor. The TP shall display an error message only after a completed entry. When possible, the operator shall be prompted to re-enter only that portion of the command entry that is not correct; however, the operator shall have the option of correcting the entire entry. The TP shall require the operator to confirm potentially destructive data or command entries before execution.

3.2.2.11 **Status information**. The TP shall provide the operator the status of the test in accordance with MIL-STD-334.

3.3 **Standard Screens**.

3.3.1 **Format**. Format for presentation to the operator shall be consistent throughout the TP. Figures 1 through 22 are standard screen samples that the TP programmer shall utilize when developing the TP. These standard screens establish the format the programmer shall follow if it is necessary to develop additional screens for a peculiar implementation. Standard screens are divided into six (6) categories which are menu, TPS data sheet, status, test set-up, operator instruction, and help. Text contained in Menu Bars, Status Bars, etc., shall begin one character width from the left of the bar and shall not extend past a one character width margin on the right side of the bar. See figures 3 and 5.

3.3.2 **Menu screens**. The primary means of operator interaction with the TP shall be by utilization of the TPS menu, figure 3. However, when multiple entry points are required, additional menus or hierarchial menus shall be utilized. In cases where the descriptive text cannot be contained in the menu bar, the text shall be a selection (option) bar on the right side of the screen, figure 20. These selection bars shall be considered command entries and shall be subject to all requirements in paragraph 3.2.

3.3.3 **TPS data sheet**. The TPS data sheet (figure 4) shall be used to display relevant data to the operator. The CONT function key shall be used on all but the last screen when more than one

Source: https://assist.dla.mil -- Downloaded: 2016-12-10T23:33Z
Check the source to verify that this is the current version before use.

screen is required. The PREV function key shall be used as necessary. The PRINT function key shall appear on all screens, and when activated, the printout shall be in the same format as displayed on the screen. The EXIT function key shall appear on only the last data sheet screen.

3.3.4 **Status screens**. Status screens shall be utilized whenever the ATE is performing ATE Survey Tests (figure 5), ICD Tests (figure 7), UUT Preliminary Tests (figure 14), or UUT Functional Tests (figure 15). These screens shall display all tests to be performed using the color coding in accordance with paragraph 3.2.2.8. Each bar on the screen shall contain on the far right side, an estimate to the closest minute (one minute minimum) of the time required to perform the test. The interactive test step number shall be displayed on the upper part of the screen. When multiple entry points are used, the status screen shall display only the test(s) selected from the menu.

3.3.5 **Test set-up screens**. Test set-up screens shall be used to provide instruction to the operator for installing the ICD (Figure 6), or the UUT (figure 13). Additional samples for ICD installation are at Appendix C. The ATE system interface shall be represented on the right side, the ICD in the center, and UUT on the left unless otherwise specified in the contract statement of work. Narrative text shall be kept to a minimum on these screens; however, there shall be help screens available for all test set-up screens to supplement the data on the test set-up screens.

3.3.6 **Operator instruction screens**. Operator instruction screens shall be used to obtain required operator input (figures 8 through 12), and to provide information to the operator that requires a response (figures 1, 2, 16, 17, 18, and 20). The operator shall only be required to input one element of data for the input type. If the entry is made from a keyboard, the prompt shall be a question mark in the lower left of the screen. If the entry is made from a keypad, the keypad must be displayed. When responses are required, it shall be through the use of reserved function keys (figure 20 provides an example of how user defined function keys may be used). User defined function keys shall be supplemented by an explanation on a help screen. When graphics are used to facilitate operator manual intervention for tasks such as alignment, adjustment, and probing, a help screen shall provide a detailed explanation of the graphic.

Source: https://assist.dla.mil -- Downloaded: 2016-12-10T23:33Z
Check the source to verify that this is the current version before use.

3.3.6.1 **Conventions**. The following conventions shall apply to operator instruction screens.

a. The following colors with provisions for monochrome shall be utilized:

(1) green (monochrome, a solid line) for UUT topology (illustration).

(2) light blue (monochrome, dim) for component label.

(3) yellow (monochrome, a dashed line) for the outline of alternative views.

(4) white for probe, adjustment, or alignment points, and instructional text.

b. The topology display shall be the same orientation as is normally viewed by the operator and shall include view identifiers such as TOP, BOTTOM, FRONT, BACK, INTERNAL, RIGHT REAR, etc.

c. Topology displays shall be designed with the minimum amount of clutter, and designed so that graphic generation by the ATE will be as fast as possible.

d. The displays shall present the minimum graphics required to positively identify the UUT and the location of all components. The topology shall represent the entire UUT from the selected view when possible. If the selected view presents excessive clutter, the view shall be represented as an alternative view. See 3.3.6.2.

e. Accompanying operator instructional text shall be outside the image of the topology display.

f. Probe, adjustment, and alignment points shall be displayed when operator action is required. The point and associated text shall be erased from the screen when the required action by the operator has been accomplished.

g. Tolerances shall be identified to the operator in this order: upper limit (UL), nominal value (NOM), and lower limit (LL). Fractional notation shall not be used. All tolerances shall include the unit of measure. The following are examples of tolerance presentations.

Source: https://assist.dla.mil -- Downloaded: 2016-12-10T23:33Z
Check the source to verify that this is the current version before use.

TEST POINT 14 UL = 25 Vdc NOM = 24.5 Vdc LL = 24 Vdc

SPRING FREE LENGTH UL = 53.55mm NOM = 50.05mm LL = 46.55mm

h. When an adjustment is being performed by the operator, the value of the item being adjusted shall be to the right of the tolerance information, and shall be constantly updated automatically as the adjustment is being performed.

3.3.6.2 **Alternative views**. When alternative views are required for graphical representations, the following conventions shall apply.

a. Alternative views shall conform to the requirements of 3.3.6.1. These views shall employ the following techniques.

(1) The appropriate UUT outline shall be displayed to provide correct identification of components and test points.

(2) The desired view to be broken out, enlarged, simplified, etc., shall be surrounded by a broken or dashed line.

(3) The view shall provide sufficient detail to enable recognition of the UUT and the area of interest in the alternative view.

(4) A PREV function key shall be provided for all alternative views so that the operator may view the overall UUT topology on demand.

b. Sectional views shall be used whenever the complexity of the UUT topology is such that a clearly discernible representation of the UUT area of interest is not possible.

c. Subassembly breakout views shall be used to identify a portion of the UUT which is not readily visible from the primary topology orientation display.

d. Exploded views shall be used to breakout discrete components or areas to be adjusted or probed when the complexity of the UUT is such that these items cannot be readily identified from the UUT topology.

3.3.7 **Help screens**. Help screens (figure 19) shall be used to provide additional information to the operator. They shall not be used to solicit input from the operator. Help screens shall be provided to supplement test set-up and operator instruction screens.

Source: https://assist.dla.mil -- Downloaded: 2016-12-10T23:33Z
Check the source to verify that this is the current version before use.

3.4 **Safety**.

3.4.1 **Test program instructions (TPI)**. TPIs (see paragraph 6.5.5) shall provide detailed descriptions of dangers encountered during testing.

3.4.2 **Test programs (TP)**. TPs shall warn operators of hazards via the ATE display. A warning message shall precede application of potentially dangerous power and individual messages shall precede all test processes where an inherent hazard is present. The TP shall also minimize operator contact with hazardous UUTs. Warnings, cautions and notes shall be in accordance with MIL-M-38784.

3.4.3 **Supplementary data (SD)**. Supplementary data (see paragraph 6.5.3) shall provide detailed descriptions of TPS and UUT hazards. Operator warnings concerning special or unique dangers which may result from improper handling or analysis of the TPS or UUT shall be emphasized.

3.5 **Coding and commentary techniques**.

3.5.1 **Coding techniques**. The TPs shall be developed utilizing Common Abbreviated Test Language for All Systems (ANSI-STD-IEEE 716 C/ATLAS), be modular in style, and utilize strict control of program branching.

3.5.1.1 **Statement numbering**. A standard statement numbering system shall be used for all TPs.

3.5.1.1.1 Statement numbers shall consist of six digit numbers, where the test statement number is the first four digits and the step number is the last two digits.

a. Statement numbers used prior to the beginning of the ATE survey tests shall range from 000100 to 099999.

b. Statement numbers used in the ATE survey test shall range from 100000 to 149999.

c. Statement numbers for the ICD survey test shall range from 150000 to 199999.

d. Statements in the sections for UUT connection, signature tests, safe to turn on tests and static tests shall range from 200000 to 209999.

Source: https://assist.dla.mil -- Downloaded: 2016-12-10T23:33Z
Check the source to verify that this is the current version before use.

e. UUT functional test statements shall range from 210000 to 499999.

f. UUT diagnostic tests statements shall range from 500000 to 899999, and when possible, be a test number which is 3000 greater than the failed functional test, e.g., a failure at functional test 2508.00 enters diagnostic test 5508.00.

g. Any statements in the TP after the diagnostic tests shall be numbered from 900000 to 999999.

3.5.1.1.2 **Increments**. When assigning statement numbers during the development of the TP, they shall be assigned in increments of not less than 10 to provide room for later corrections or modifications to the TP. Statement numbers shall be in sequential order and shall not be resequenced after acceptance for configuration management. There shall be at least one statement number on each page of the program source list. The first statement of each subroutine procedure definition shall have a statement number.

3.5.1.2 **Names for variables**. Names for variables shall be selected to reflect the primary attribute of the data which the variable represents. Names shall be selected to enhance the readability to the ATLAS statements in which the variable is used. Variable names that represent a unit of measurement, i.e., volts, volts direct current, ohms, inch, etc., shall be in accordance with MIL-STD-12. Names that represent an attribute or element of the UUT shall be generic names.

3.5.1.3 **Looping statements**. To prevent the inability to decipher the nesting of looping statements in TPs, such as the IF and WHILE statements in ATLAS, TPs shall utilize indentation of each ATLAS statement within each loop by two spaces until the termination of each loop. The END statement for each loop shall be aligned with the initiation of the loop.

3.5.2 **Commentary techniques**. Comments shall provide the vehicle to link the UUT and the ICD functions that are being tested to the ATE oriented ATLAS statements, and used to separate major sections of coding which have independent functions within the program. Only comments which meet these criteria shall be used to preclude an over use of comments. The types of comments that shall be used are major comment headers, minor comment headers, functional comments, and procedural comments.

Source: https://assist.dla.mil -- Downloaded: 2016-12-10T23:33Z
Check the source to verify that this is the current version before use.

3.5.2.1 **Major comment headers**. Major comment headers shall be used to identify major sections of coding throughout the test program. The format of the major comment header shall be a rectangle of asterisks, with a minimum dimension of 5 by 50 asterisks, containing a short, underlined, functional description of the block of code. At least one blank line shall appear before and after each major comment header (figure 21).

3.5.2.2 **Minor comment headers**. Minor comment headers shall be used to identify the function of each module of code within the test program. These headers (figure 22) shall consist of one or more lines of text, as necessary, to convey the function of the code. Each line of text shall consist of five asterisks, followed by five spaces, followed by a line of text, then five spaces, followed by five asterisks. At least one blank line shall appear before and after each minor comment header. Minor headers shall be provided for each test in the following applications:

a. ATE survey tests, to identify the instrument being tested.

b. ICD survey tests, to identify the circuitry of the ICD which is being tested.

c. UUT preliminary tests, to identify the circuitry or components being tested.

d. UUT functional tests, to identify the UUT function being tested and to reference the applicable testing specification revision and paragraph.

e. UUT diagnostic tests, to identify the area of the diagnosis and the functional test that routed the TP to the particular diagnostic test.

3.5.2.3 **Functional comments**. Functional comments shall be used within a module of code to enhance the readability of the code. Functional comments shall be UUT oriented. These comments shall always be used to explain the logic flow of UUT diagnostic tests, and the stimuli applications and evaluations of measurements.

3.5.2.4 **Procedural comments**. Procedural comments shall be used to explain program flow and enhance the readability of the code. Branching statements shall require procedural comments to explain the branch. Procedural comments shall also be used to explain the programmer's objectives when the TP uses looping statements

Source: https://assist.dla.mil -- Downloaded: 2016-12-10T23:33Z
Check the source to verify that this is the current version before use.

if the code is not explained by a functional comment. Procedural comments shall show the statement number location of that procedure definition wherever a procedure is called by the program.

3.6 **Administrative Software**.

3.6.1 **Purpose**. The administrative software shall be used to generate reports and to provide utility functions to the operator. Two files are required to generate reports, a UUT log record file and a system configuration file. The UUT log record file is a historical file containing UUT test records. The TP must communicate with both of these files.

3.6.2 **Data elements**. The four data element inputs (see figures 8 through 11) required for the operator to obtain reports shall be displayed via the UUT LOG RECORD screen (figure 12). The programmer shall ensure that these four data elements, together with the other data for which the TP is responsible, are stored in the UUT log file at the conclusion of testing each UUT.

3.7 **Test Program Preamble**.

3.7.1 **Title block**. The first element of the preamble shall be the title block (figure 23). It shall appear immediately after the termination of the ATLAS statement BEGIN. The entire title block shall be bordered by asterisks so that it is further emphasized. The program name shall also be bordered by asterisks within the title block. The title block shall be spaced so that with the ATLAS statement BEGIN, it shall occupy the entire first page of the source listing when it is printed on a standard hard copy device. See figure 23. The title block shall be a section of comments that identifies:

a. the program name.

b. the UUT name and part number.

c. the next higher assembly, when applicable.

d. the weapon system(s) of which the UUT is a component.

3.7.2 **UUT configuration data**. Configuration data shall follow the test program title block. Preceded by a major comment header, this section shall list all of the configuration data packages used to provide source data for the development of the TPS. For each item of the source data, this comment shall list the drawing, revision level of the drawing, the latest date of the acceptance specification, military specification, and product

Source: https://assist.dla.mil -- Downloaded: 2016-12-10T23:33Z
Check the source to verify that this is the current version before use.

specification. If the drawing is an original (no revision level), this shall be designated by the term "ORIG" in the revision column. An example of the UUT configuration data comment is provided in figure 24.

3.7.3 **Test program configuration data**. The TP configuration data shall follow the UUT configuration data. Preceded by a major comment header, the TP configuration data block (figure 25) shall identify all changes made to the TP after it is submitted for design verification for the first time. The version submitted for initial verification shall be designated revision 01.

3.7.4 **Entry point directory**. The entry point directory (figure 26) shall follow the TP configuration data block. The directory shall be bordered by asterisks and shall list all entry points that can be used by the TP developer or maintainer to speed access to certain sections of the TP. To the extent possible entry points shall be designed into the TP at the beginning of each functional block of tests and shall not be dependent upon stimuli application nor indicator initialization which occurs prior to the entry point. The TP documentation shall contain the procedure to replace the operator TPS menu with the entry point directory and back to the menu. The directory shall function for the TP programmer or maintainer in the same manner the TPS menu functions for the operator.

3.7.5 **INCLUDE statements**. A block of code shall be reserved for any ATLAS INCLUDE statements which may be necessary. This section shall be preceded by a major comment header, containing the underlined words "INCLUDE STATEMENTS". The header shall be followed by the appropriate ATLAS constructs.

3.7.6 **REQUIRE statements**. A block of code shall be reserved for any ATLAS REQUIRE statements which may be necessary. This section shall be preceded by a major comment header, containing the underlined words "REQUIRE STATEMENTS". The header shall be followed by the appropriate ATLAS constructs.

3.7.7 **Variables**. Following the REQUIRE statements, there shall be a section for the declaration of variables. This section shall be preceded by a major comment header, containing the underlined words "DECLARE STATEMENTS". The header shall be followed by the appropriate ATLAS constructs for the declaration of all variables used globally throughout the program.

Source: https://assist.dla.mil -- Downloaded: 2016-12-10T23:33Z
Check the source to verify that this is the current version before use.

3.7.8 **Interface definition**. The next section of coding shall contain the ATLAS DEFINE INTERFACE statement. This section shall be preceded by a major comment header, containing the underlined words "INTERFACE DEFINITION".

3.7.9 **Fill statements**. Data initialization for all global variables shall be included in this section of coding. This section shall be preceded by a major comment header, containing the underlined words "FILL STATEMENTS".

3.7.10 **Message definition**. This section of code shall be allocated to the definition of ATLAS DEFINE MESSAGE statements. This section shall be preceded by a major comment header, containing the underlined words "MESSAGE DEFINITION".

3.7.11 **Procedures**. The last section of the preamble shall be used to define each procedure to be used globally using the appropriate ATLAS constructs. This section shall be preceded by a major comment header, containing the underlined words "PROCEDURES". Prior to each procedure there shall be a minor comment header, providing specific information as to the function or utilization of the procedure, and statement number locations of calling procedures. A procedure shall not be defined unless there is more than one calling procedure.

3.8 **UUT Verification**.

3.8.1 **Structure**. This section shall be preceded in the source code by a major comment header, containing the underlined words "UUT VERIFICATION". This shall be followed by the executable ATLAS code that generates the standard TPS MENU screen, figure 3. This screen shall verify the UUT by displaying to the operator the UUT name and part number. This screen shall also serve as an entry point directory by displaying the six options described in the following paragraphs. The test programmer shall ensure that the TP is properly coded to execute the option selected by the operator.

3.8.2 **View TPS data sheet**. When the option VIEW TPS DATA SHEET is selected, the TP shall display the TPS data screen, figure 4. This screen shall provide the operator the information needed to successfully complete the TPS. In addition, this screen shall provide the operator a listing of all ATE measurement and stimuli devices needed to execute the TPS, to include the ICD, cabling, expendable/ durable items, TMs, or other devices not normally part of the test set. This screen shall present a print and exit option to the operator. The print option shall activate the printer to print the items listed on the screen and the exit option shall return the operator to the TPS menu.

Source: https://assist.dla.mil -- Downloaded: 2016-12-10T23:33Z
Check the source to verify that this is the current version before use.

3.8.3 **Run all tests**. When the option RUN ALL TESTS is selected the TP shall execute in sequence the ATE Survey tests, the ICD Tests, and the UUT Tests. Only a failure during the ATE survey or ICD tests shall interrupt the flow of the testing. When the ATE survey and ICD tests are successful, the TPS Main Menu shall be displayed to the operator.

3.8.4 **Run ATE survey tests**. When the option RUN ATE SURVEY TESTS is selected, the TP shall execute only the ATE Survey Tests. Upon successful completion the TP shall return to the TPS Main Menu.

3.8.4.1 **Initiation of ATE survey test**. The ATE survey test shall be preceded in the source code by a major comment header, containing the underlined words "ATE SURVEY TESTS". Only those measurement and stimulus devices, at the specific ranges and tolerances, used by the TP shall be tested. When initiated, the ATE SURVEY TEST STATUS screen (figure 5) shall be displayed to the operator.

3.8.4.2 **ATE survey test fault detection**. In the event the ATE survey test detects a fault, the TP shall display an OPERATOR INSTRUCTION screen (figure 16). This display shall identify the fault(s) detected by the survey tests. This data shall be printed on hard copy if the operator selects this option, while maintaining the display. When the operator selects the CONT option, a second OPERATOR INSTRUCTION SCREEN (figure 17) shall be displayed. An EXIT command shall return the TP to the TPS MENU.

3.8.5 **Run ICD tests**. When the option RUN ICD TEST is selected, the TP shall execute only the ICD tests. Upon successful completion the TP shall return to the TPS Main Menu.

3.8.5.1 **ICD tests parts**. The ICD tests shall be preceded in the source code by a major comment header, containing the underlined words "ICD TESTS". The ICD tests shall consist of four parts: the ICD test set-up diagram; the ICD signature test; the ICD Safe-To-Turn-On (STTO) tests (if required) and the ICD survey test. Each of these parts shall be preceded in the source code by a minor comment header, identifying the section of code.

3.8.5.2 **Initiation of ICD tests**. Upon initiation of the ICD tests, the ICD TEST SET-UP screen, figure 6, shall be displayed to the operator. This screen shall include the part number of the ICD and identify the required cabling, by reference designator. A HELP screen (figure 19) shall be available to provide specific installation instructions to the operator and a reference designator to part number cross reference. When CONT

Source: https://assist.dla.mil -- Downloaded: 2016-12-10T23:33Z
Check the source to verify that this is the current version before use.

is activated, the TP shall execute the ICD signature test. An EXIT command shall return the TP to the TPS MENU. Appendix C contains additional examples of ICD set-up diagrams to be used when load boxes or load card assemblies are included as part of the ICD.

3.8.5.3 **Initiation of ICD signature test**. Upon initiation of the ICD signature test, the TP shall display the ICD TEST STATUS screen, figure 7. The signature test shall consist of measuring the ICD identification resistors to determine that the correct ICD is properly installed. If the test fails, an OPERATOR INSTRUCTION SCREEN shall notify the operator that the correct ICD may not be installed. The operator shall be instructed to verify the correct ICD is installed, and if so, reinstall the ICD, and if not, install the correct ICD. If the failure persists, the TP shall identify the problem on an OPERATOR INSTRUCTION SCREEN, figure 16. When the TP is instructed to continue, a second OPERATOR INSTRUCTION SCREEN, figure 18, shall be displayed. An EXIT command shall return the TP to the TPS MENU. Upon successful completion of the ICD signature test, the TP shall begin the ICD STTO test, then the ICD Survey Test while maintaining the ICD TEST STATUS SCREEN (figure 7) for the operator. If any of these tests fail, the TP shall identify the failure using an OPERATOR INSTRUCTION screen (figure 16). Upon selection of the CONT option, a second OPERATOR INSTRUCTION screen (figure 18) shall be displayed. Upon selection of the EXIT option, the program shall return to the TPS Main Menu.

3.8.5.4 **ICD STTO test**. The ICD STTO test shall confirm that full power and signals may be applied to the ICD without damage to the equipment nor injury to personnel. Successful completion shall initiate the ICD survey test.

3.8.5.5 **ICD survey test**. The ICD survey test shall verify the operational capabilities of all cables, ancillary items, and those portions of the ICD required to test the particular UUT. In cases where an ICD is used to test several UUTs, a separate program shall be developed to test all functions of the ICD. Upon successful completion, an OPERATOR INSTRUCTION screen shall direct the operator to return to the TPS Main Menu.

3.8.6 **Run UUT tests**. When the option RUN UUT TESTS is selected, the TP shall execute the UUT tests. The TP shall measure the ICD for the correct identification resistors before continuing with the UUT tests since the ICD has not been previously identified. If the TP determines that the ICD is incorrect, the TP shall display the appropriate ICD and the connecting instructions before continuing with the UUT tests. Upon successful completion of the UUT tests, the TP shall return to the TPS Main Menu.

Source: https://assist.dla.mil -- Downloaded: 2016-12-10T23:33Z
Check the source to verify that this is the current version before use.

3.8.6.1 **UUT testing parts**. UUT testing shall be divided into five parts: Administrative data; UUT Test Set-up; UUT Preliminary Tests; UUT Functional Tests and UUT Diagnostic Tests. The beginning of each part shall be preceded in the source code with a major comment header, containing the underlined title of the section.

3.8.6.2 **Administrative data section**. The administrative data section of the TP shall consist of acquiring certain data from the operator for the administrative software in the operating system. The operator shall enter the UUT serial number, work order number, end item code (EIC), etc. Figures 8 through 12 describe the method that shall be used. After the four administrative data elements have been entered, the TP shall display the data to the operator using an Operator Instruction screen, figure 12. This data shall be output to the hard copy device after a page command has been given. If the operator initiates an EXIT command, the TP shall return to the TPS menu. When the operator initiates a continue (CONT) the TP shall proceed to the UUT test set-up.

3.8.6.3 **UUT test set-up**. The UUT test set-up shall be accomplished as described by the UUT test set-up diagram, figure 13. When the operator initiates a CONT the TP shall proceed to the UUT preliminary tests. If the operator initiates an EXIT command, the TP shall return to the TPS menu.

3.8.6.4 **UUT preliminary tests**. The UUT preliminary tests shall consist of the UUT signature test, UUT STTO tests, and the UUT static tests as required. Each of these sections of code shall be denoted in the source code by a major comment header, containing the appropriate title. Individual tests within each of the categories shall be denoted in the source code by a minor comment header, identifying the section of code.

3.8.6.4.1 **Preliminary test display**. Upon entering the UUT preliminary tests, the TP shall display the UUT PRELIMINARY TEST STATUS SCREEN, figure 14. Preliminary testing shall consist of the UUT signature test and the UUT STTO test.

a. The UUT signature test shall consist of a selected impedance measurement to identify that the correct UUT is properly installed. The TP shall display an OPERATOR INSTRUCTION screen which shall instruct the operator to verify the UUT part number and installation, if the signature test fails. The TP shall return to the UUT TEST SET-UP screen if the operator acknowledges a problem. If a problem is not acknowledged, the TP shall display an OPERATOR INSTRUCTION SCREEN, figure 16, with the

Source: https://assist.dla.mil -- Downloaded: 2016-12-10T23:33Z
Check the source to verify that this is the current version before use.

failure data formatted in accordance with MIL-STD-2077. Upon selection of the CONT function, a second OPERATOR INSTRUCTION screen, figure 2, shall be displayed. The TP shall return to the TPS menu when the operator executes an EXIT command.

b. The TP shall display an OPERATOR INSTRUCTION screen, figure 16, if the UUT STTO test or static test fail. This screen shall display the failure data in accordance with MIL-STD-2077. The TP shall output the data to the hard copy device when the operator selects the print option. Upon selection of the CONT function, a second OPERATOR INSTRUCTION screen, figure 2, shall be displayed. The TP shall return to the TPS menu when the operator executes an EXIT command.

3.8.6.5 **Functional tests**. The TP shall enter the UUT functional tests once the preliminary tests are successfully completed. The TP shall display the UUT FUNCTIONAL TEST STATUS screen, figure 15. This screen shall have one status bar for each functional test. When there are too many functional tests for one screen, the last bar shall be labeled "CONTINUED ON NEXT SCREEN". The TP shall advance to the next screen once the last test on that screen is completed. The labels on the test bars shall relate to the test being performed.

a. An OPERATOR INSTRUCTION screen shall be displayed if a manual action is required during a test. The operator shall acknowledge that the action has been completed by executing the CONT option, the TP operation shall resume and the test status screen shall appear. Upon successful completion of the functional tests, the TP shall display an OPERATOR INSTRUCTION screen, figure 1.

b. When PRINT is selected, the TP shall output the message "UUT HAS PASSED ALL TESTS" and the administrative data to the hard copy device. If the operator selects the CONT option, the TP shall return to the administrative data section of the program and display the operator instruction screen for entering the UUT serial number, figure 8, of the next UUT to be tested.

c. The TP shall return to the TPS menu if the operator selects the EXIT option. If a failure is detected during the functional tests, the TP shall enter the diagnostic tests.

3.8.6.6 **Diagnostic testing**. To determine if the TP shall enter diagnostic testing immediately upon encountering a functional test failure or completing as many of the functional tests as possible shall be determined by the design of the UUT on a case by case basis. If the design is such that additional testing can

Source: https://assist.dla.mil -- Downloaded: 2016-12-10T23:33Z
Check the source to verify that this is the current version before use.

be performed even though one circuit has failed, the functional tests shall continue. However, if the circuitry is interdependent, diagnostics shall begin at the first functional failure. In any case, the TP shall ensure that the UUT functional test status screen displays the fact that a failure has occurred by displaying the associated status bar in red for a minimum of three seconds before beginning diagnostics. If during the diagnostic testing manual action is required by the operator, an operator instruction screen shall be used and the operator shall indicate completion by selecting the CONT option, on the screen, or if the probe has a continue button, by pressing the probe button, at which time the diagnostics shall resume. Upon successful detection of the failure, diagnostics are complete and the TP shall display an OPERATOR INSTRUCTION screen, figure 16, on which the repair message shall be displayed in accordance with MIL-STD-2077. When the operator selects the print option, the repair message shall be output to the hard copy device. The TP shall also output the administrative data at this time. If the operator selects the CONT option, the TP shall return to the administrative data section of the program and display the operator instruction screen for entering the UUT serial number screen, figure 8, of the next UUT to be tested. If the operator selects the EXIT option, the TP shall return to the TPS menu.

3.8.6.7 **Exit**. When the EXIT option of the TPS Menu is selected, the TP shall cease operation and return to the test set operating software.

3.9 **Program flow**.

3.9.1 **Initial entry**. The ATE Survey Test and the ICD Tests shall be executed upon the initial entry into the test program. This shall be accomplished by skipping the TPS Menu screen on the initial execution. The first screen displayed to the operator shall be the TPS Data Sheet (figure 4). The test program shall then proceed as though the operator had selected the RUN ALL TESTS option of the TPS Menu Screen (figure 3).

3.9.2 **Structure**. When specified by the acquiring activity, the TPS shall be structured to permit the operator to run individual or groups of functional tests. These tests shall allow the operator to verify a repair action. When user entry points are required, a specific TPS structure is required for implementation.

3.9.2.1 **Initial flow**. The initial program flow shall not change. If the TPS is being executed for the first time, the ATE survey tests and ICD tests must be executed first, followed by the UUT preliminary tests. If the TPS is not being executed for

Source: https://assist.dla.mil -- Downloaded: 2016-12-10T23:33Z
Check the source to verify that this is the current version before use.

the first time, and the operator has selected RUN ALL TESTS from the TPS Main Menu, the flow proceeds as normal through the execution of the UUT preliminary tests. At the beginning of the UUT functional tests, a menu shall be presented to the operator instead of the UUT functional test status screen. This menu will provide the operator with the options of running all functional tests, in which case the flow proceeds normally, or of running individual functional groups of tests. Upon selection of the option to run an individual functional group, additional menus, following the requirements of paragraph 3.3.2, shall be presented to determine what tests the operator wishes to perform. Upon completion of a particular functional test group, the program shall return to the TPS Main Menu. Under no circumstances will the TPS output any message to the hard copy device or to the administrative data files, indicating that the UUT has passed all tests when this option is employed. Failure messages shall be output to the hard copy device and the administrative data files.

3.9.2.2 **Implementation**. When employing this option, it is essential that each functional group be self-contained in its own modular structure (see 3.5.1). Each modular construct must be logically independent of all other modules, with the only permissible assumptions being that the ATE Survey tests, the ICD tests, and the UUT preliminary tests have passed.

3.9.2.3 **UUT repair.** Maintenance instructions (see paragraph 6.5.8) to repair the UUT shall be accessable from the TPS. This shall be accomplished by a link to an electronic technical manual.

4. QUALITY ASSURANCE PROVISIONS.

4.1 **Responsibility for inspection**. Unless otherwise specified in the contract or purchase order, the contractor is responsible for the performance of all inspection requirements (examinations and tests) as specified herein. Except as otherwise specified in the contract or purchase order, the contractor may use his own or any other facilities suitable for the performance of the inspection requirements specified herein, unless disapproved by the Government. The Government reserves the right to perform any of the inspections set forth in this specification where such inspections are deemed necessary to ensure supplies and services conform to prescribed requirements.

4.1.1 **Responsibility for compliance**. All items must meet all requirements of sections 3 and 5. The inspection set forth in this specification shall become a part of the contractor's overall inspection system or quality program. The absence of any inspection requirements in the specification shall not relieve

Source: https://assist.dla.mil -- Downloaded: 2016-12-10T23:33Z
Check the source to verify that this is the current version before use.

the contractor of the responsibility of assuring that all products or supplies submitted to the Government for acceptance comply with all requirements of the contract. Sampling in quality conformance does not authorize submission of known defective material, either indicated or actual, nor does it commit the Government to acceptance of defective material.

4.2 **Quality assurance provisions**. The contractor shall be responsible for quality assurance in the preparation of the TPS in accordance with DOD-STD-2168, MIL-I-45208, and MIL-M-85337 to the extent specified by the contracting activity. The contractor shall develop a quality assurance plan which incorporates DOD-STD- 2167, DOD-STD-2168, and MIL-I-45208. See 6.3.

4.3 **Contracting activity inspection**. Test Program Sets submitted by the contractor shall be subject to review and verification by the contracting activity.

4.4 **In-process reviews**. When specified by the contracting activity, these reviews will be performed by its representatives during the preparation of the TPS. The contractor shall support these reviews by providing access to the TPS materials and equipment, facilities, or other support as specified by the contracting activity.

4.5 **Validation**. The contractor shall validate the technical accuracy and adequacy of all operating and maintenance procedures in the TPS in accordance with MIL-M-85337, DOD-STD-2168, and MIL-I-45208. This validation shall include a complete review of the associated Maintenance Allocation Chart (MAC), to ensure that all authorized tasks are covered in the TPS. It shall include a review of all supply items included in the TPS to ensure that they are authorized for use at the appropriate maintenance level. When specified by the contracting activity, a simulation of performance may be used to avoid destructive testing. Each individual task shall be validated from start to completion in one session. The technical accuracy and content of all drawings, diagrams, schematics, and other material which supports the task shall be validated as part of the task. The contracting activity reserves the right to witness the validation. The contractor shall correct all errors found in the TPS during the validation. Minor corrections may be made on the spot and the performance of the task continued. Numerous corrections that disrupt the performance of the task shall be considered major corrections. In the case of any type of major correction, the entire task performance shall be repeated at another time after the corrections have been made to the TPS.

Source: https://assist.dla.mil -- Downloaded: 2016-12-10T23:33Z
Check the source to verify that this is the current version before use.

4.5.1 **Records**. The contractor shall maintain quality assurance records that contain, at the minimum, the following information: dates of validations, tasks and material validated, method of validation (simulation or actual), findings and applicable remarks, and action taken. The contracting activity reserves the right to examine these records at the contractor's facility.

4.5.2 **Government furnished information**. The contractor shall validate information furnished by the Government along with the rest of the TPS. The contractor shall notify the contracting activity if any Government furnished information is inaccurate, inadequate, or inconsistent with the contents of the TPS.

4.6 **Verification**. The contractor shall participate in the verification by the Government and shall provide the following support:

a. Record and maintain records during the verification process. The contractor shall also maintain a master copy of the TPS which shall be corrected during the verification process.

b. Provide assistance to the contracting activity during the verification and provide the Government with a copy of the discrepancies revealed.

c. Make necessary corrections to discrepancies revealed during the verification process.

d. Provide the contracting activity with a report of the corrective actions taken.

4.6.1 **Verification responsibility**. The Government will verify the contractor's validation. In addition to reviewing the TPS for conformance to the requirements of the governing documents, and inspecting the contractor's validation records, the Government reserves the right to perform verification by one or more of the following:

4.6.2 **Verification performance**. Performing 100% of the operating and maintenance procedures in the TPS by using operational and support personnel of the type and qualifications of those expected to use and maintain the equipment when deployed. One successful iteration of each procedure will be performed. All performance will be monitored by an experienced Government subject-matter expert and a master copy of the TPS being verified or master comment list will be maintained to record all changes. All verified material will be updated from the results of the verification and given a final desk review. The desk review will include a check of those portions of the TPS

Source: https://assist.dla.mil -- Downloaded: 2016-12-10T23:33Z
Check the source to verify that this is the current version before use.

not subject to hands- on performance. When resources and time constraints limit the feasibility of performing validation and verification as separate entities, these requirements may be combined into a validation/ verification, subject to Government approval. This option must have agreement of both the material developer and combat developer/user representatives. The schedule followed will be that approved in the validation plan. The requirements for both the validation and verification will be followed, except that the performance will be on the TPS as a whole and not on separate out- of-sequence tasks.

4.6.3 **Contractor validation**. The Government shall participate in thecontractor's validation review IAW the contractor's validation schedule. The Government reserves the right to participate in the contractor's reries of any number of elements of the TPS.

4.6.4 **Technical content review**. Reviewing the technical content of the TPS by having Government personnel perform the operating and maintenance instructions on the equipment, either at the contractor's plant or at Government facilities.

4.6.5 **Witnessing validation**. Witnessing the validation reviews performed by the contractor.

5. PACKAGING.

5.1 **Packaging and marking**. Unless otherwise specified by the contracting activity, the packaging and packing of TPS and associated products shall conform to ASTM D3951 (for unclassified) and AR 380-5 (for classified).

5.2 **Marking**. Packs shall be marked in accordance with MIL-STD-129 and ASTM D3951, as applicable, and shall include the appropriate TPS number and publication date.

5.3 **Classified material**. All classified material shall be safeguarded, packaged, and marked in accordance with DOD 5220.22-M.

6. NOTES.

(This section contains information of a general or explanatory nature that may be helpful, but is not mandatory.)

6.1 **Intended use**. This specification is intended to be used for acquisition of test program sets needed by the maintenance personnel for the operation and maintenance of equipment. The requirements of this specification are normally invoked by

Source: https://assist.dla.mil -- Downloaded: 2016-12-10T23:33Z
Check the source to verify that this is the current version before use.

contract. When the Government prepares the subject TPS, the Government preparing activity assumes the role of the contractor, and is responsible for meeting the requirements specified herein.

6.2 **Acquisition requirements**. Acquisition documents should specify the following:

a. Title, number, and date of this specification.

b. Issue of DODISS to be cited in the soliciation, and if required, the specific issue of individual documents referenced (see paragraph 2.1.1)

c. Title and number of the TPS to be prepared.

d. Description of target audience and reading grade level.

e. Identification of information to be furnished by the Government.

f. Quality assurance provisions to be invoked (including deliverable data requirements).

g. Specification tailoring.

6.3 **Data requirements**. The following data item descriptions (DID) must be listed, as applicable, on the Contract Data Requirements List (DD Form 1423) when this specification is applied on a contract, in order to obtain the data, except where DOD FAR Supplement 27.475-1 exempts the requirement for a DD Form 1423.

Specification	DID Number	DID Title
DOD-STD-2168 (See 4.2) Paragraph 4.4	DI-QCIC-80572	Software Quality Program plan
DOD-STD-2167 (See 4.2) Paragraph 4.5.2	DI-MCCR-80009	Software Configuration Management Plan
MIL-M-85337A(NAVY) (See 4.2)		
Paragraph 3.1.1	DI-M-2194	Technical Manual Quality Assurance Program Plan

Source: https://assist.dla.mil -- Downloaded: 2016-12-10T23:33Z
Check the source to verify that this is the current version before use.

Specification	DID Number	DID Title
MIL-M-85337A(NAVY) (See 4.2)		
Paragraph 3.3.3.1	DI-M-2195	Validation Plan
Paragraph 3.3.3.6	DI-M-2196	Validation Certification
Paragraph 3.3.5	DI-M-2197	Technical Manual Evaluation Records
Paragraph 3.3.4.1	DI-M-2198	Verification Plan
Paragraph 3.3.4.2	DI-M-2199	Verification Planning Data Card
Paragraph 3.3.4.3	DI-M-2200	Verification Sequence Control Chart
Paragraph 3.3.4.5	DI-M-2201	Technical Manual Verification Evaluation Certification

The above DIDs were those cleared as of the date of this specification. The current issue of DOD 5010.12-L, Acquisition Management Systems and Data Requirements Control List (AMSDL), must be researched to ensure that only current, cleared DIDs are cited on the DD Form 1423.

6.4 **Test program set acquisition**. This specification must be listed on the Contract Data Requirements List (DD Form 1423) in order to acquire the TPS described by the specification, except where DOD FAR Supplement 27.475-1 exempts the requirement for DD Form 1423.

6.5 **Definitions**. The definition of terms below apply as they are used in this specification.

6.5.1 **Contracting activity**. An element of an agency designated by the agency head and delegated broad authority regarding acquisition functions.

6.5.2 **Interconnecting device (ICD)**. The ICD provides the required mechanical, electrical, and optical interconnections between the UUT and ATE system to allow execution of the TP.

6.5.3 **Supplementary data**. Supplementary data consists of information, text, schematics, and logic diagrams necessary for the analysis of the TPS and UUT in the event of a problem or anomaly during the testing process. The amount and content of the supplementary data is contingent upon the capability of the ATE to store and display required information automatically.

Source: https://assist.dla.mil -- Downloaded: 2016-12-10T23:33Z
Check the source to verify that this is the current version before use.

6.5.4 **Test program (TP)**. The TP contains a coded sequence which, when executed by the ATE, provides the stimuli and evaluation of the measurements required to test the UUT.

6.5.5 **Test program instruction (TPI)**. The TPI provides the TPS related information needed for testing (e.g., hook-up, probe point locations, or other programmed operator intervention) which cannot be conveniently provided or displayed by the ATE under program control.

6.5.6 **Test program set (TPS)**. The TPS consists of those items required to test a UUT on ATE, which includes all the necessary electrical, mechanical, electro-optical, instructional, and logical decision elements. It includes the TP on a storage media such as magnetic tape, hard disk, memory cassette, optical disk, etc.; the ICD; the TPI; and the supplemental data. The TPS provides the capabilities for UUT performance verification, fault detection, and isolation.

6.5.7 **Warning**. An operating or maintenance procedure, practice, condition, statement, or other notification, that if not strictly observed, could result in injury or death of personnel doing the task.

6.5.8. **Maintenance instructions**. Maintenance instructions enable an operator/maintainer to effect repair of the UUT. These instructions are technical manual information. Normally there will be a link to an ETM or reference to a TM.

6.6 **Subject term (key word) listing**.

Coding techniques

Diagnostic testing

Fault detection

Fault isolation

Status screens

6.7 **Changes from previous issue**. Marginal notations are not used in this revision to identify changes with respect to the previous issue due to the extensiveness of the changes.

Source: https://assist.dla.mil -- Downloaded: 2016-12-10T23:33Z
Check the source to verify that this is the current version before use.

aircraft of another nation. Informs the second

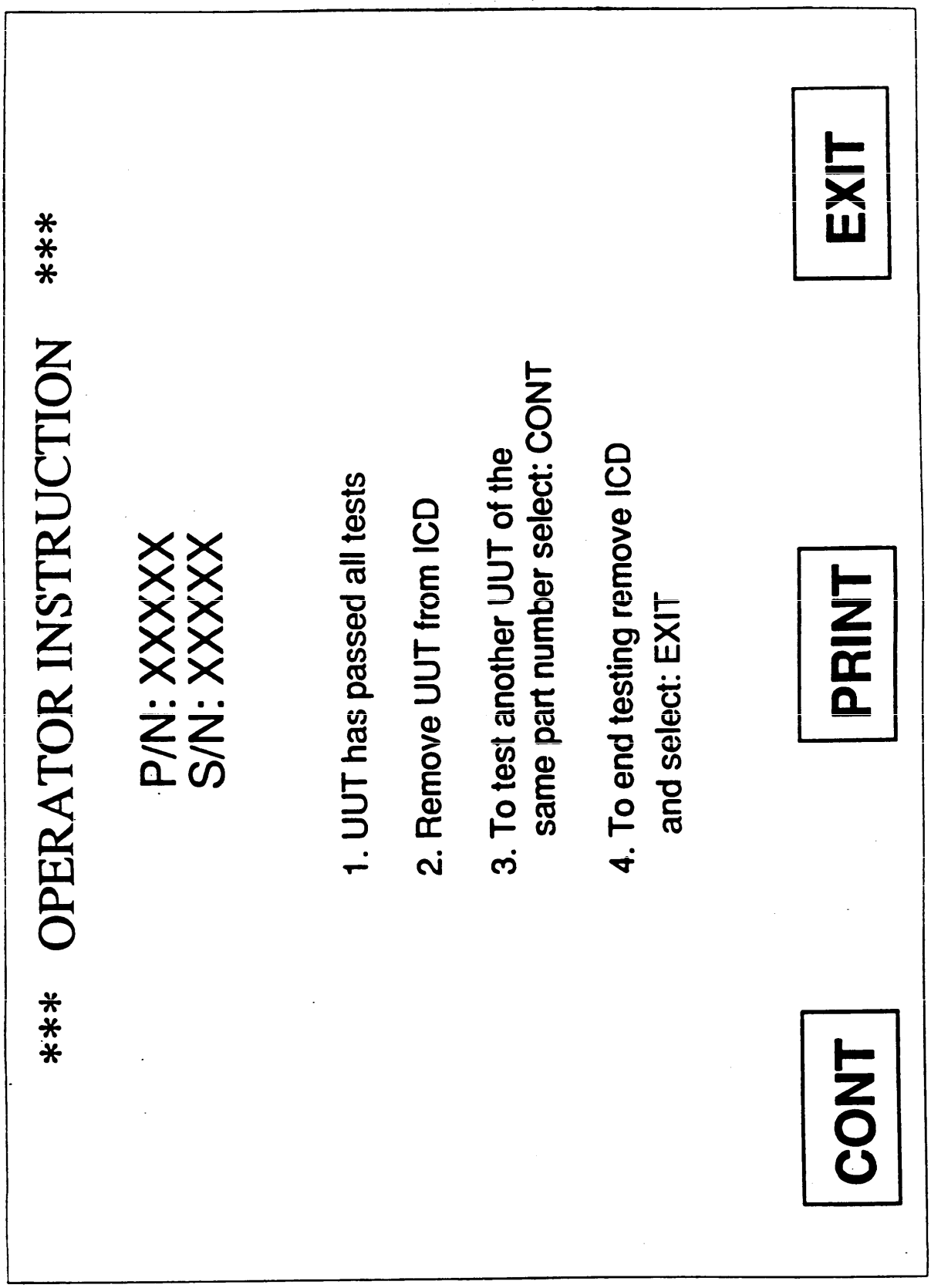

FIGURE 1. Example of an operator instruction screen.

Source: https://assist.dla.mil -- Downloaded: 2016-12-10T23:33Z
Check the source to verify that this is the current version before use.

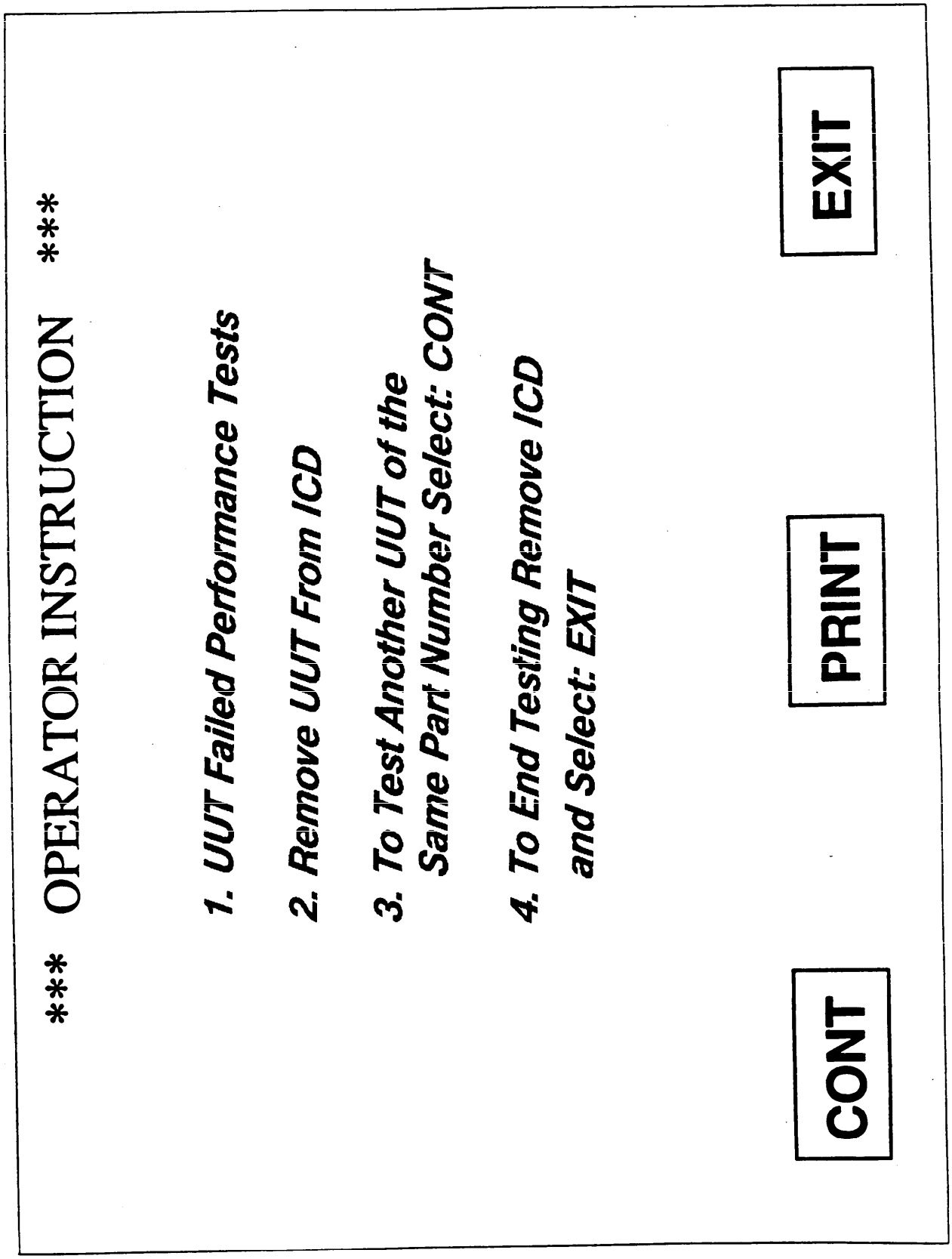

FIGURE 2. Example of an operator instruction screen.

Source: https://assist.dla.mil -- Downloaded: 2016-12-10T23:33Z
Check the source to verify that this is the current version before use.

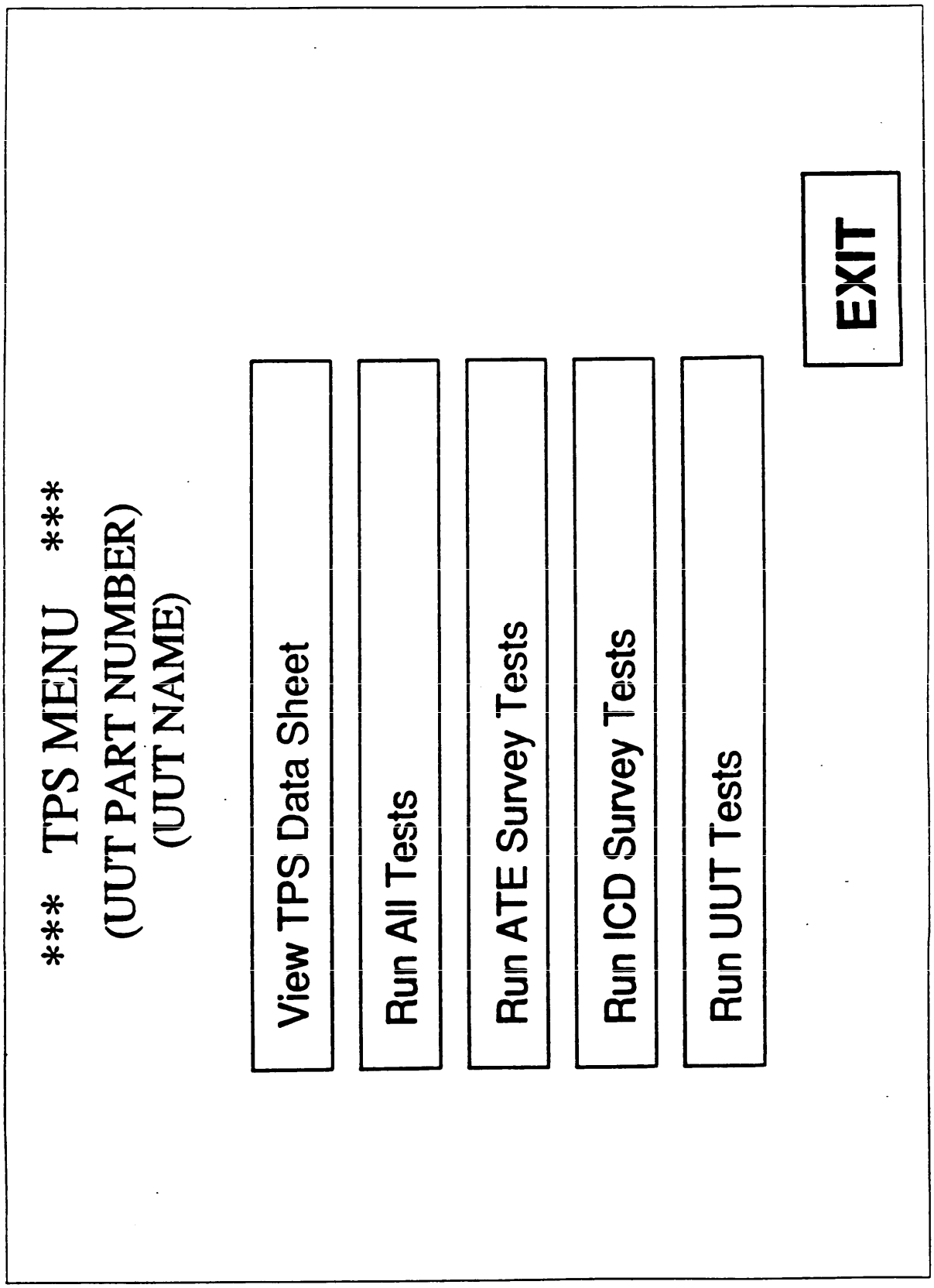

FIGURE 3. Example of a TPS menu.

Source: https://assist.dla.mil -- Downloaded: 2016-12-10T23:33Z
Check the source to verify that this is the current version before use.

TPS DATA SHEET

SOFTWARE ID: XXXXX
SOFTWARE REVISION: XXXXX
PROGRAM NAME: XXXXX

UUT P/N: XXXXX
UUT NAME: XXXXX
NSN: XXXXX

NOTES: (Operator actions that may be required prior to running the TPS)

I SUPPORT ITEMS: (List all support items necessary)

II TECH MANUAL REQUIREMENTS: (List all TMs required)

III PERSONNEL REQUIREMENTS: (List any specific requirements necessary)

IV UUT TEST RUN-TIME (GO-NOGO ONLY):

CONT PREV PRINT EXIT

FIGURE 4. Example of a TPS data sheet.

Source: https://assist.dla.mil -- Downloaded: 2016-12-10T23:33Z
Check the source to verify that this is the current version before use.

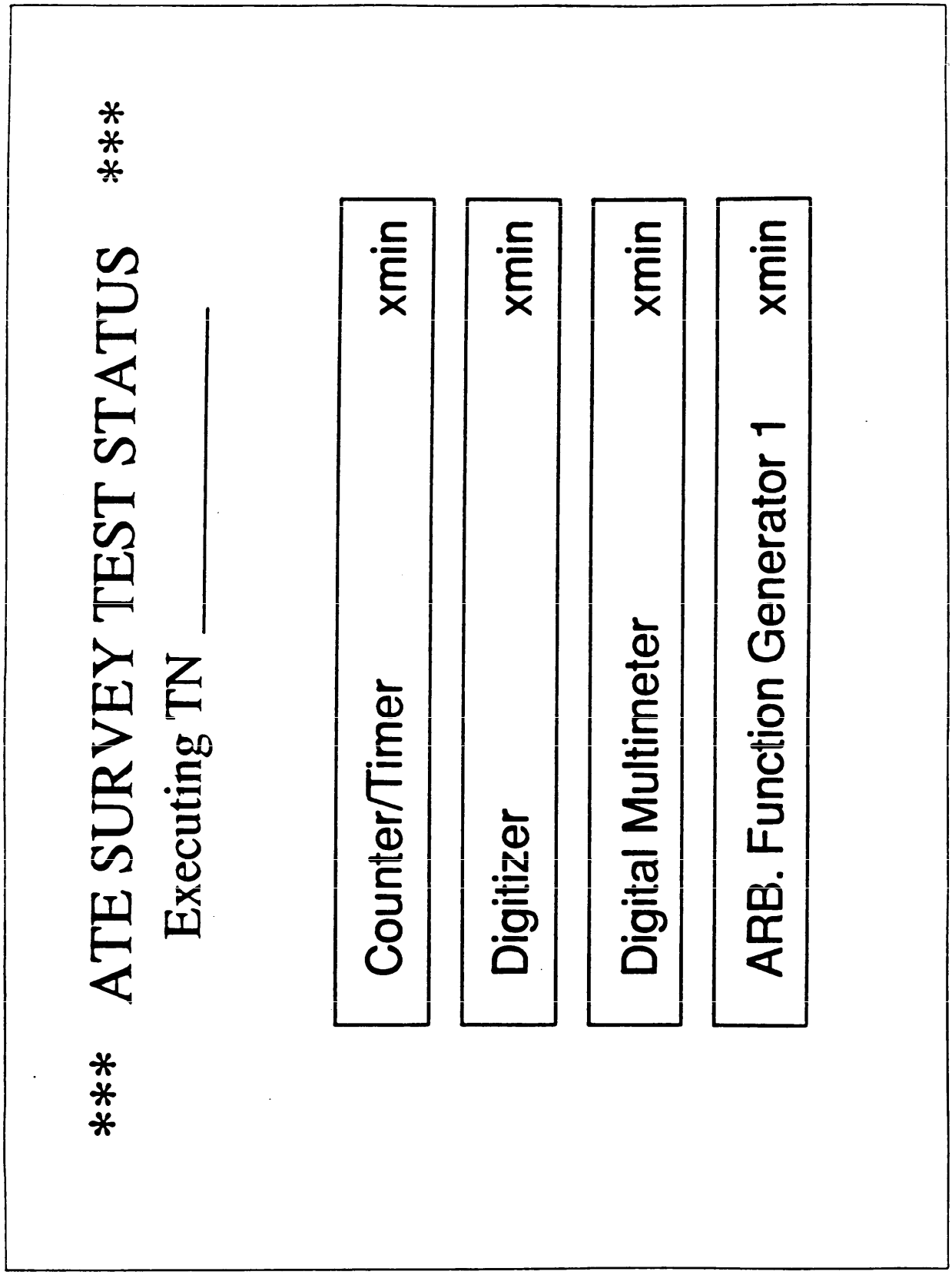

FIGURE 5. Example of ATE survey test status.

Source: https://assist.dla.mil -- Downloaded: 2016-12-10T23:33Z
Check the source to verify that this is the current version before use.

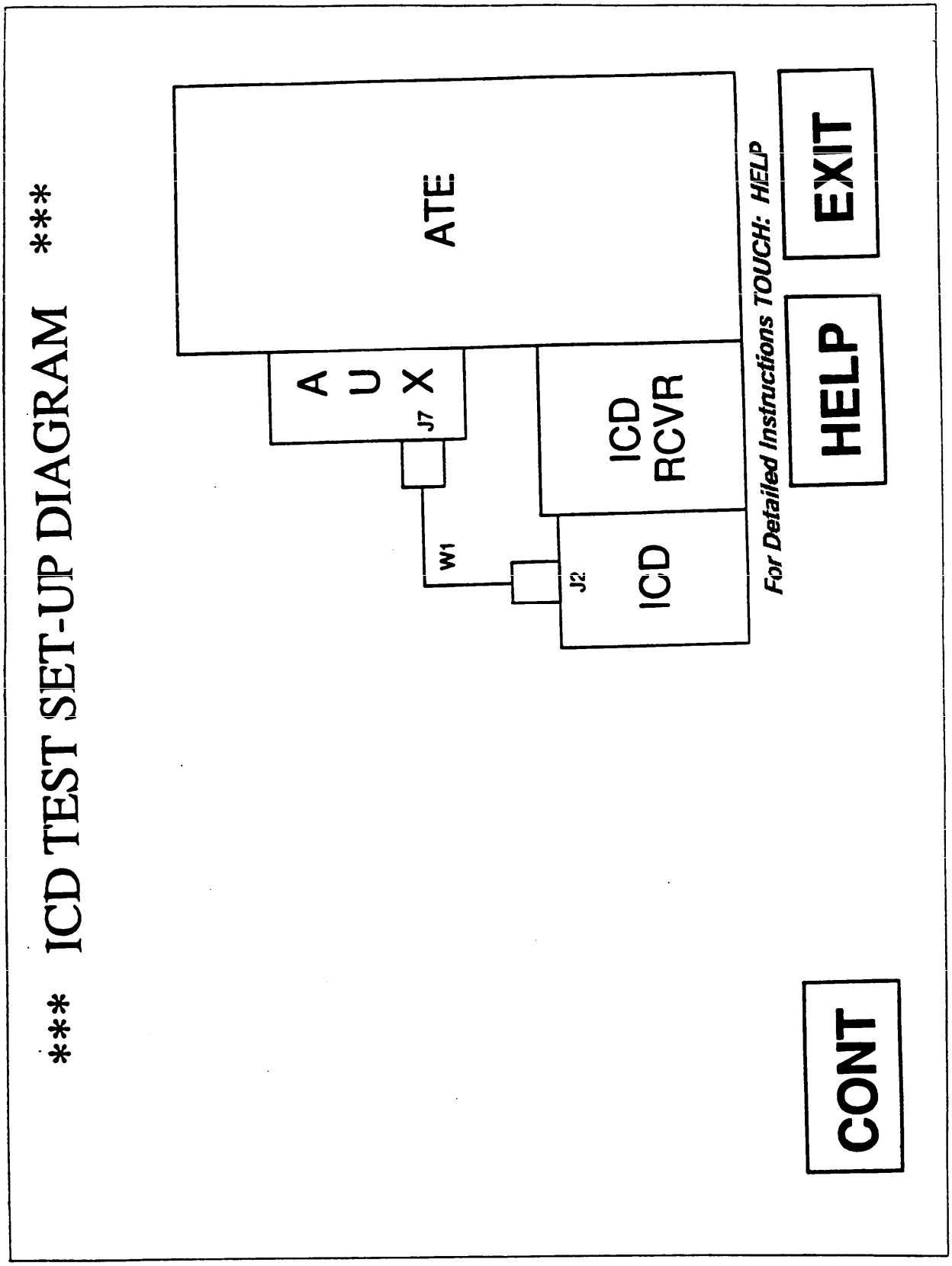

FIGURE 6. Example of ICD test set-up diagram.

Source: https://assist.dla.mil -- Downloaded: 2016-12-10T23:33Z
Check the source to verify that this is the current version before use.

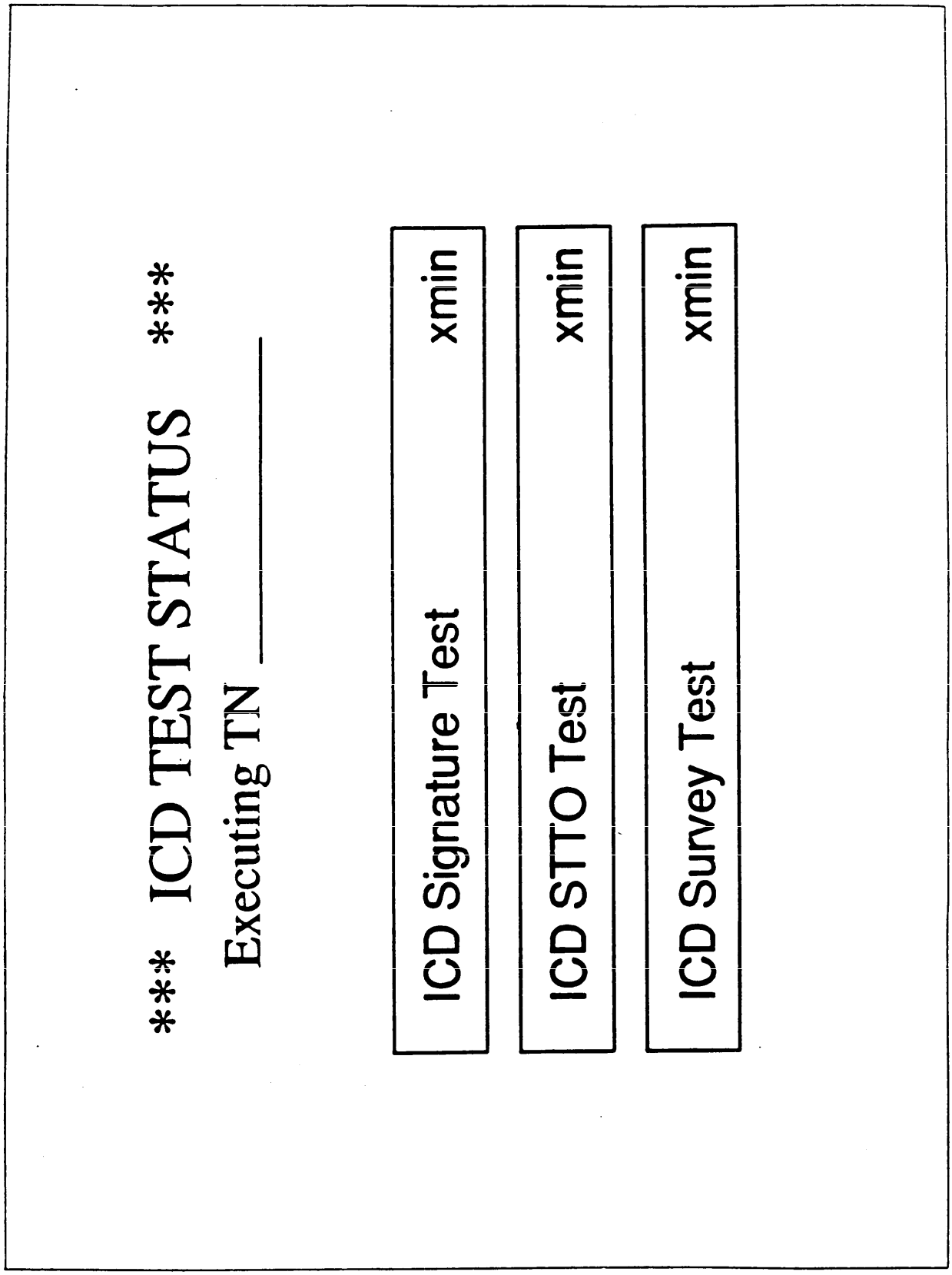

FIGURE 7. Example of ICD test status.

Source: https://assist.dla.mil -- Downloaded: 2016-12-10T23:33Z
Check the source to verify that this is the current version before use.

*** OPERATOR INSTRUCTION ***

Enter the UUT Serial Number:

?

FIGURE 8. Example of an operator instruction screen.

Source: https://assist.dla.mil -- Downloaded: 2016-12-10T23:33Z
Check the source to verify that this is the current version before use.

*** OPERATOR INSTRUCTION ***

Enter the Work Order Number:

?

FIGURE 9. Example of an operator instruction screen.

Source: https://assist.dla.mil -- Downloaded: 2016-12-10T23:33Z
Check the source to verify that this is the current version before use.

*** OPERATOR INSTRUCTION ***

Enter the End Item Code:

?

FIGURE 10. Example of an operator instruction screen.

Source: https://assist.dla.mil -- Downloaded: 2016-12-10T23:33Z
Check the source to verify that this is the current version before use.

*** OPERATOR INSTRUCTION ***

Enter the UUT owning unit UIC:

?

FIGURE 11. Example of an operator instruction screen.

Source: https://assist.dla.mil -- Downloaded: 2016-12-10T23:33Z
Check the source to verify that this is the current version before use.

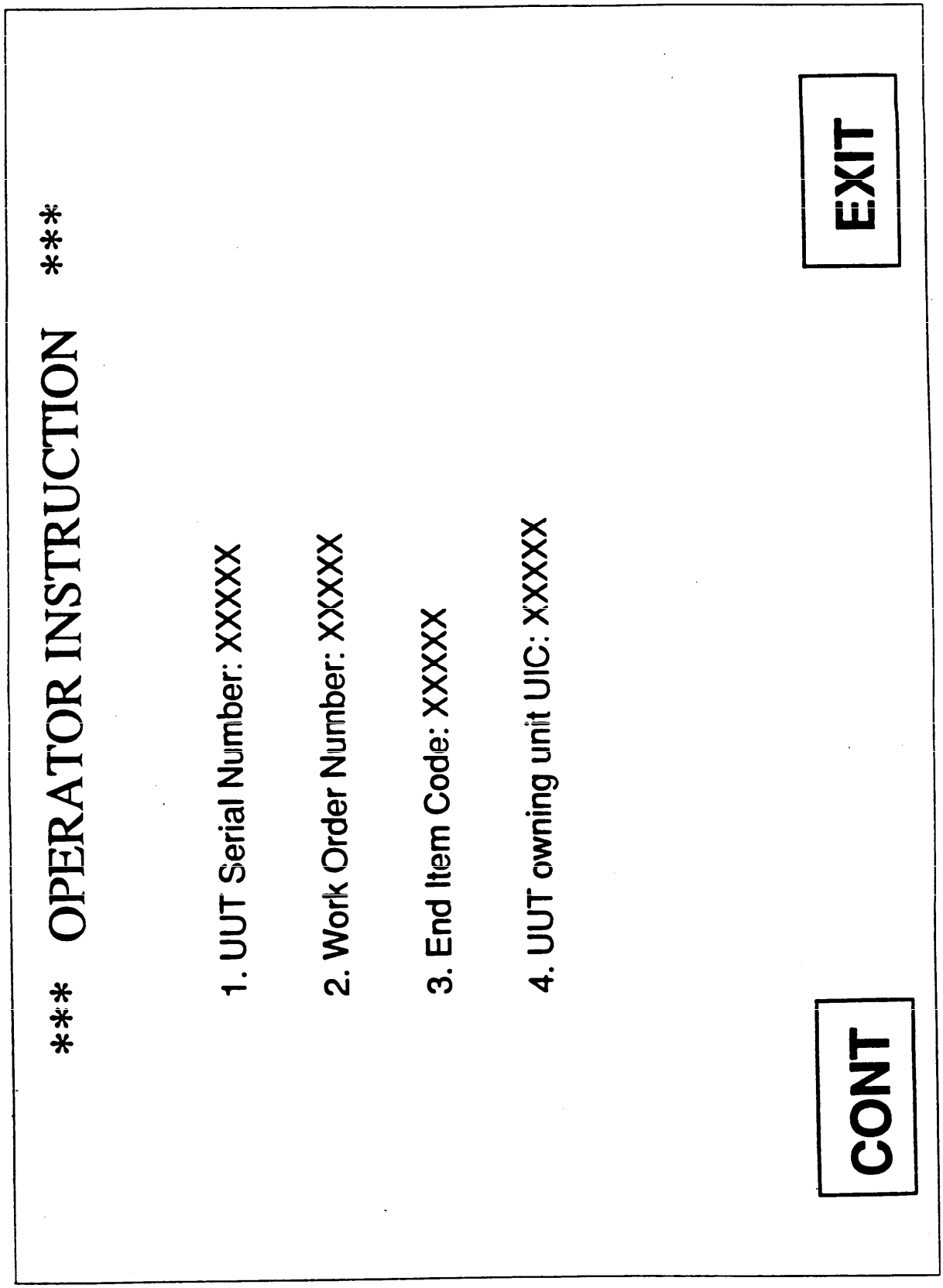

FIGURE 12. Example of an operator instruction screen.

Source: https://assist.dla.mil -- Downloaded: 2016-12-10T23:33Z
Check the source to verify that this is the current version before use.

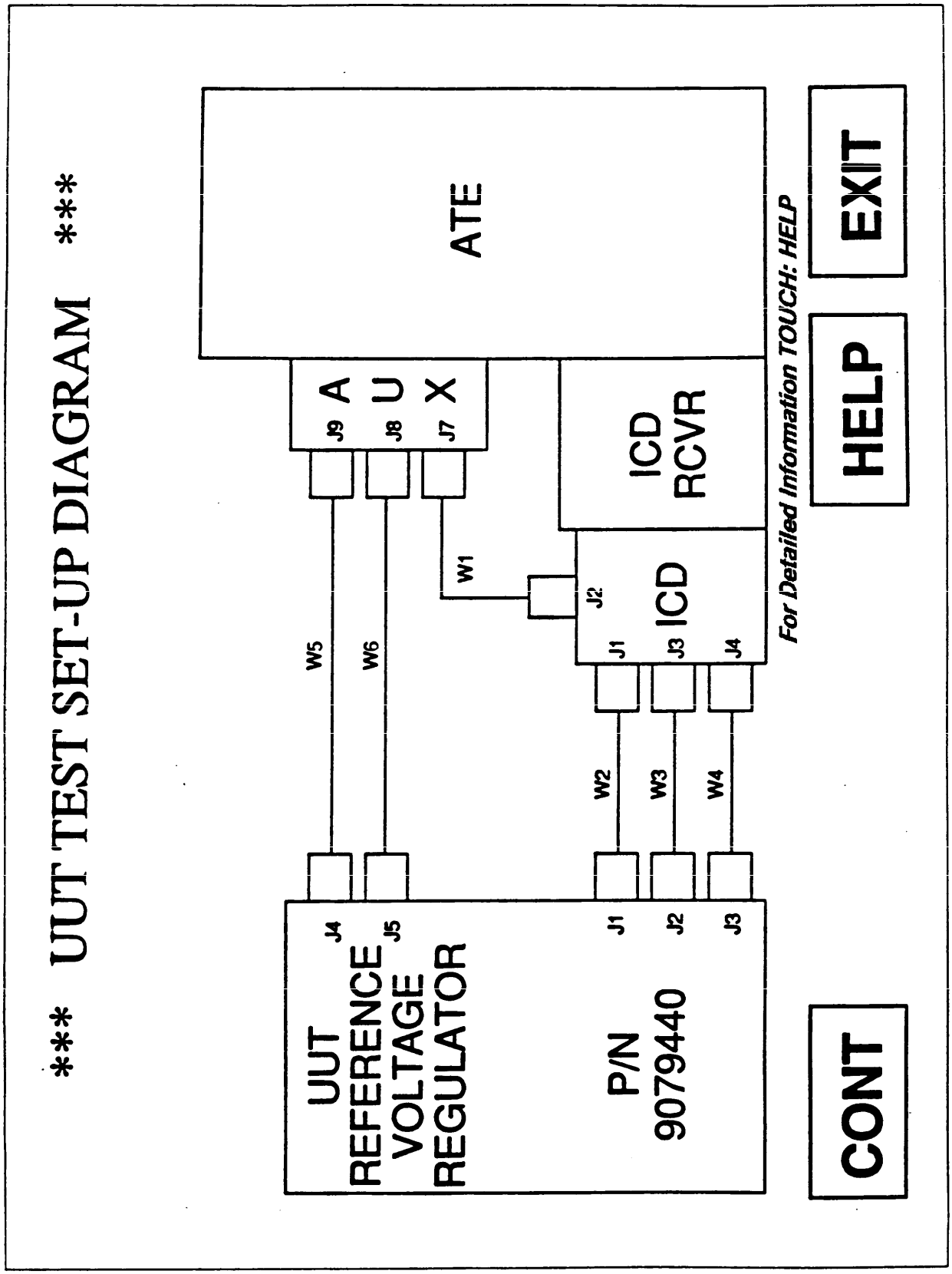

FIGURE 13. Example of UUT test set-up diagram.

Source: https://assist.dla.mil -- Downloaded: 2016-12-10T23:33Z
Check the source to verify that this is the current version before use.

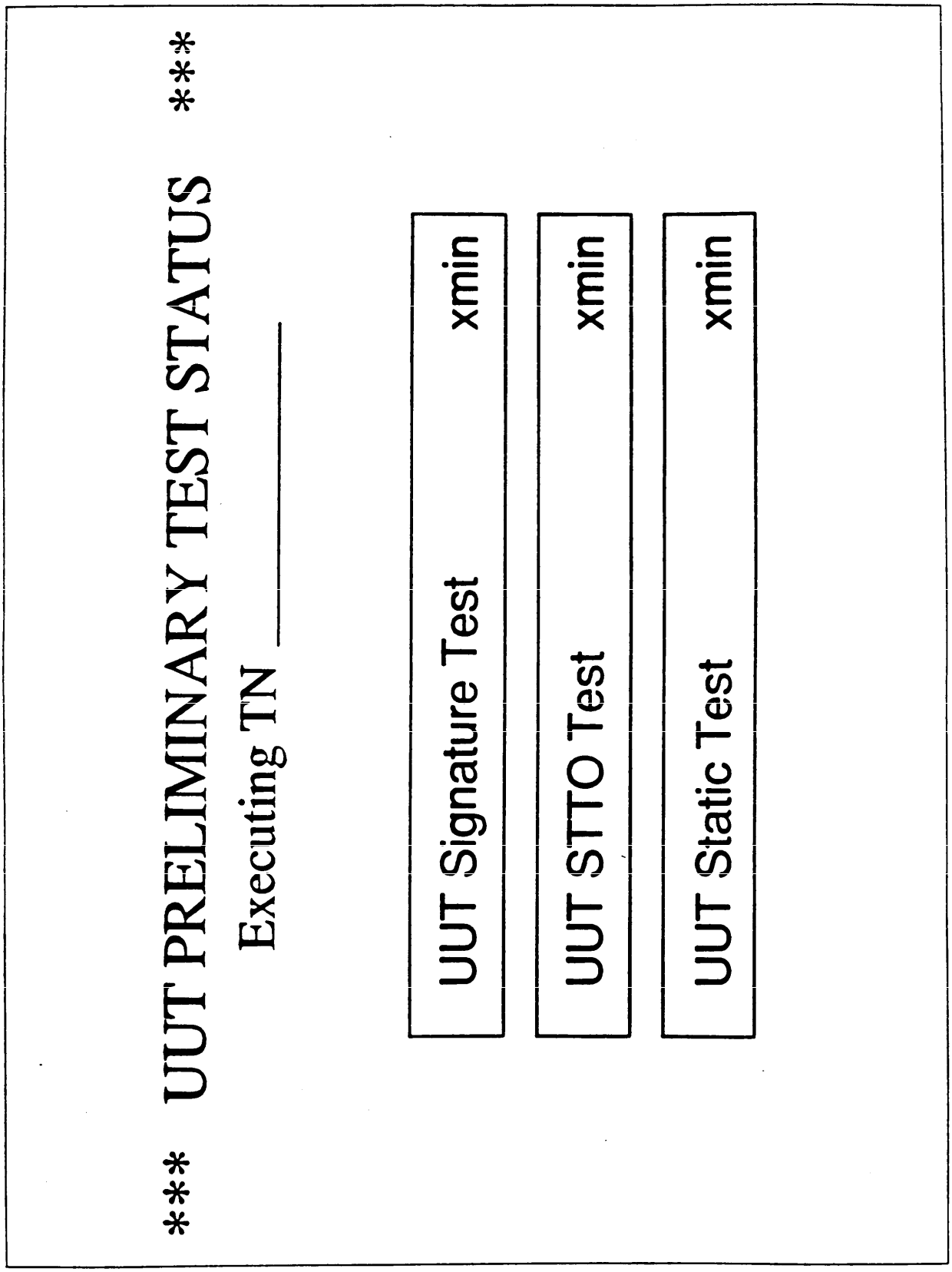

FIGURE 14. Example of UTT preliminary test status.

Source: https://assist.dla.mil -- Downloaded: 2016-12-10T23:33Z
Check the source to verify that this is the current version before use.

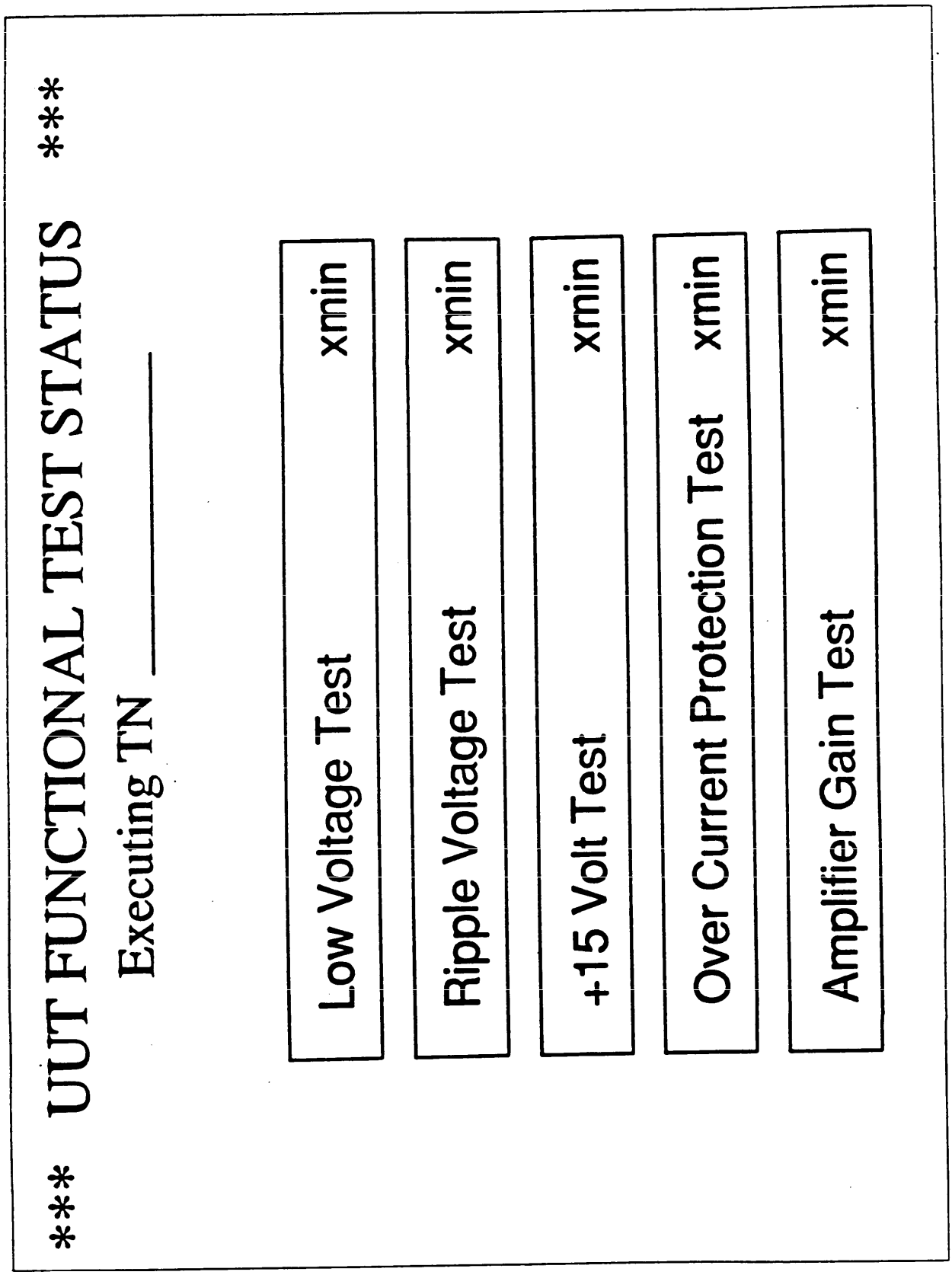

FIGURE 15. Example of UUT functional test status.

Source: https://assist.dla.mil -- Downloaded: 2016-12-10T23:33Z
Check the source to verify that this is the current version before use.

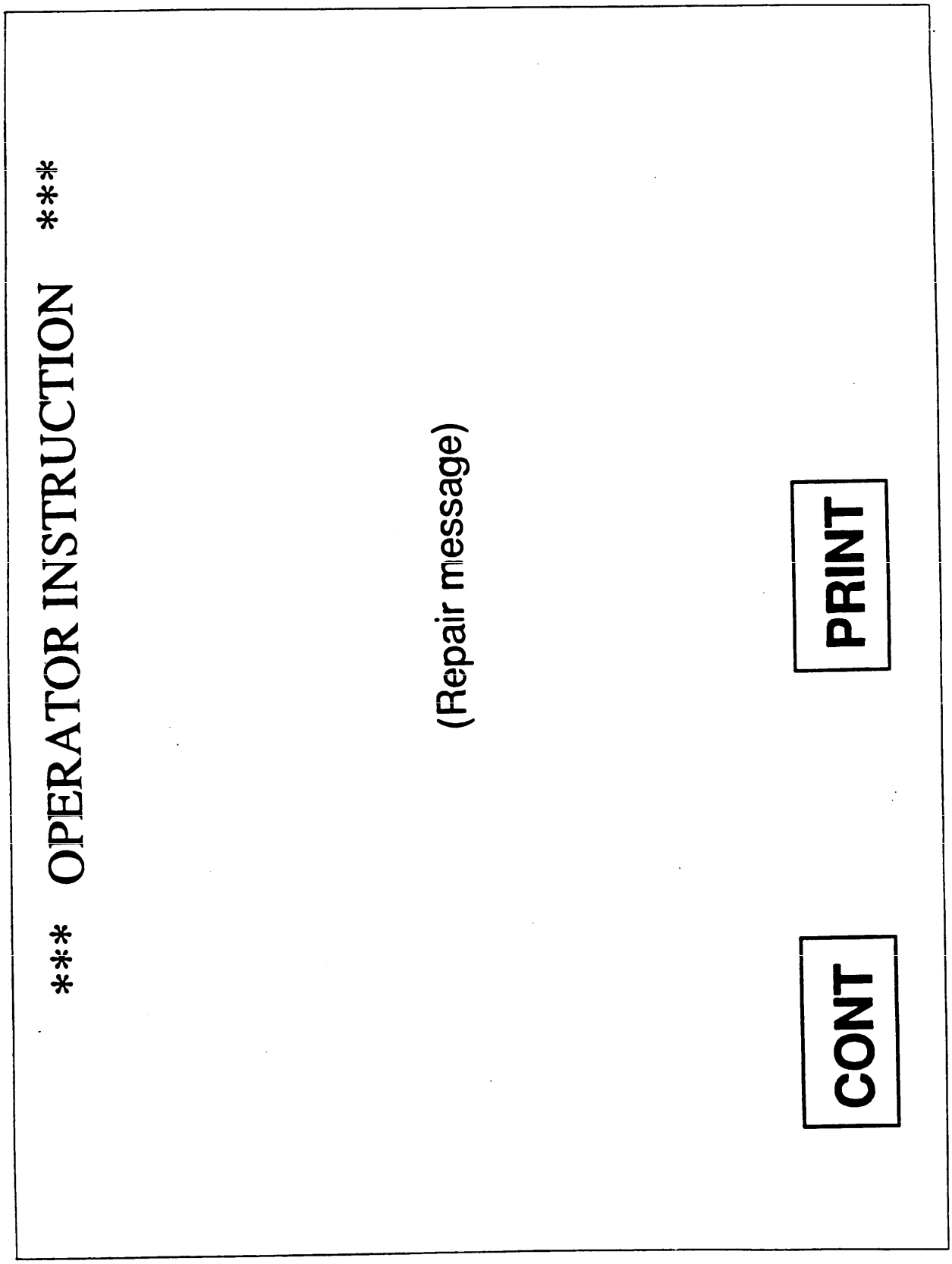

FIGURE 16. Example of an operator instruction screen.

Source: https://assist.dla.mil -- Downloaded: 2016-12-10T23:33Z
Check the source to verify that this is the current version before use.

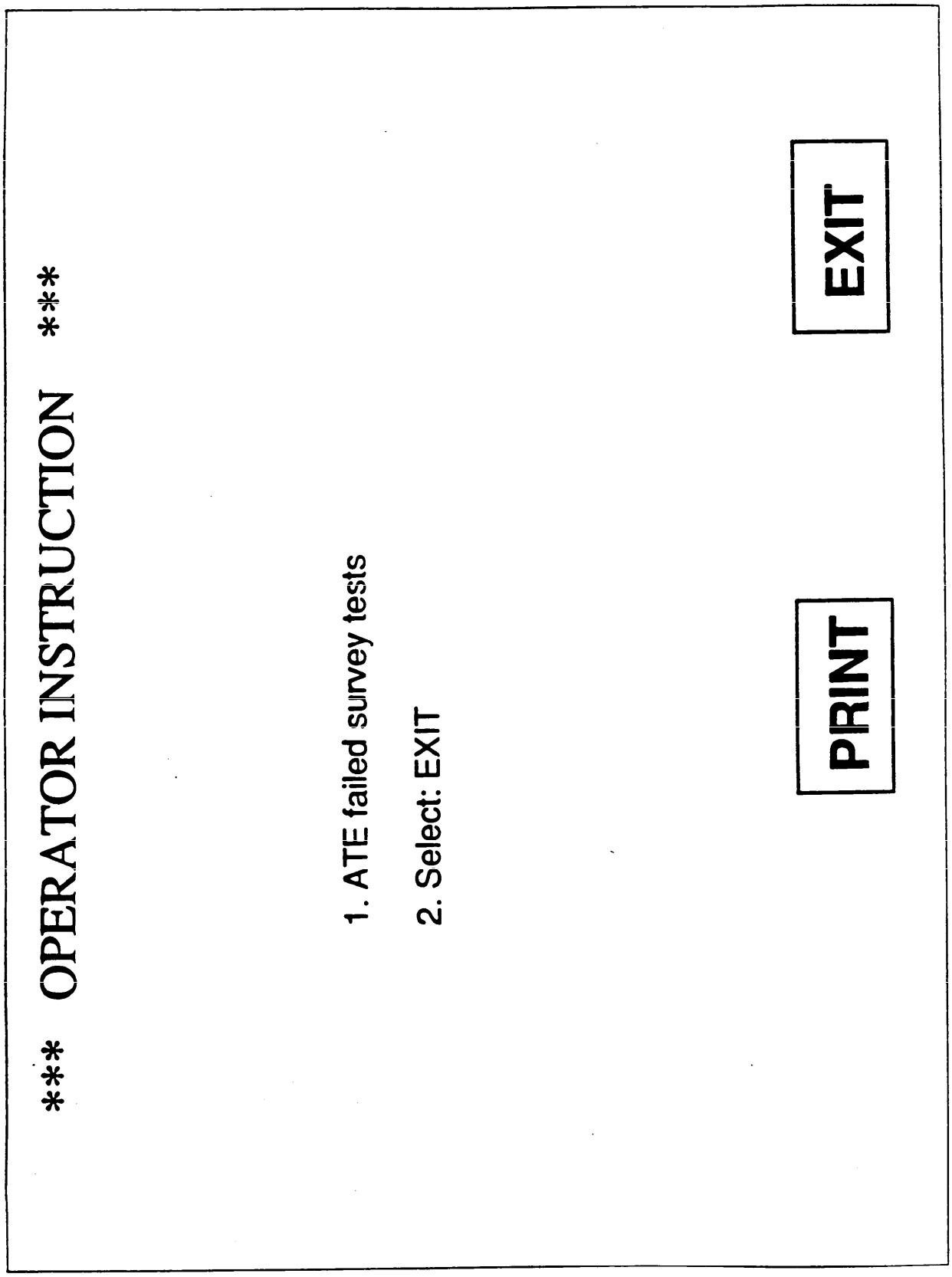

FIGURE 17. Example of an operator instruction screen.

Source: https://assist.dla.mil -- Downloaded: 2016-12-10T23:33Z
Check the source to verify that this is the current version before use.

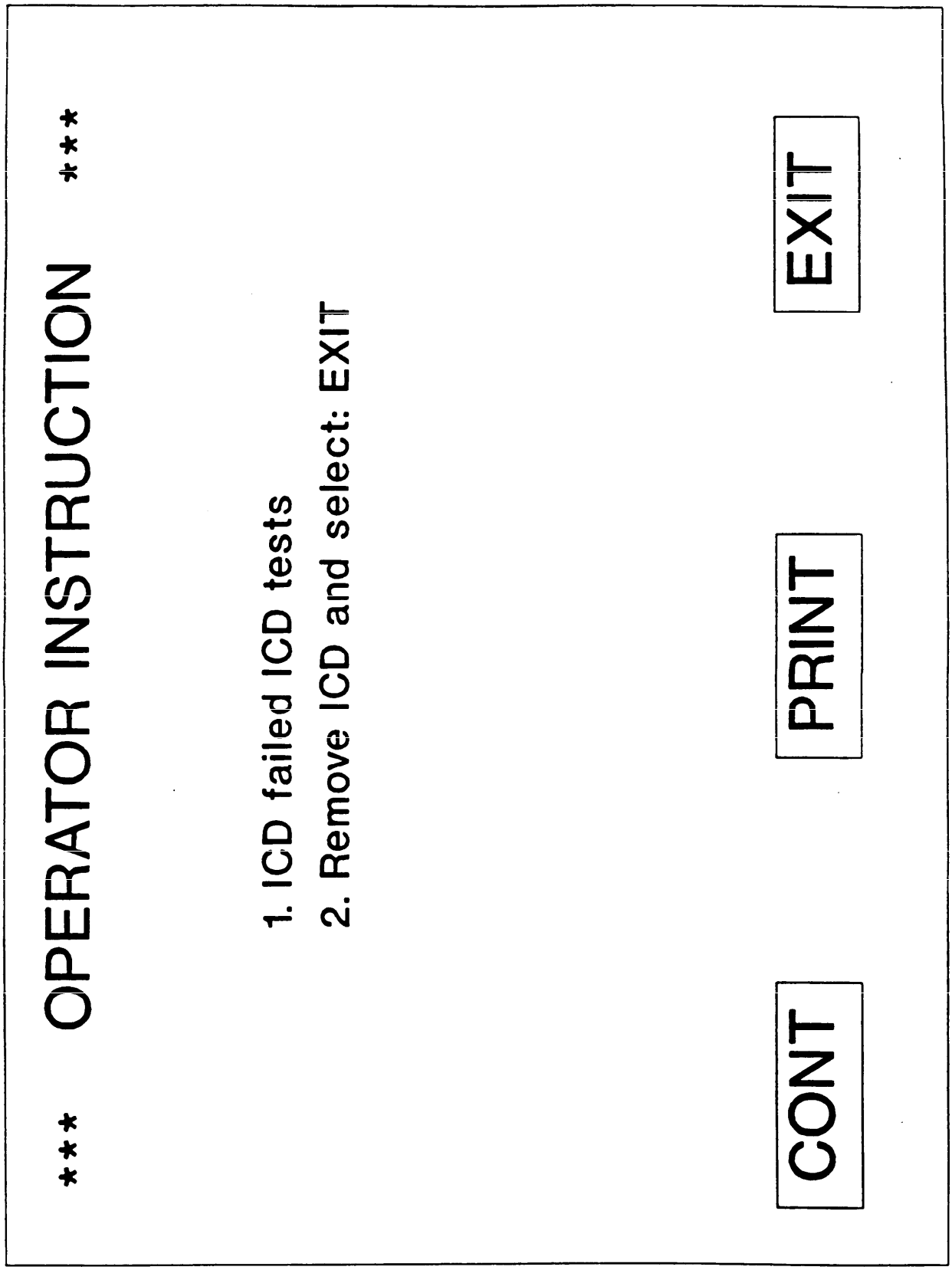

FIGURE 18. Example of an operator instruction screen.

Source: https://assist.dla.mil -- Downloaded: 2016-12-10T23:33Z
Check the source to verify that this is the current version before use.

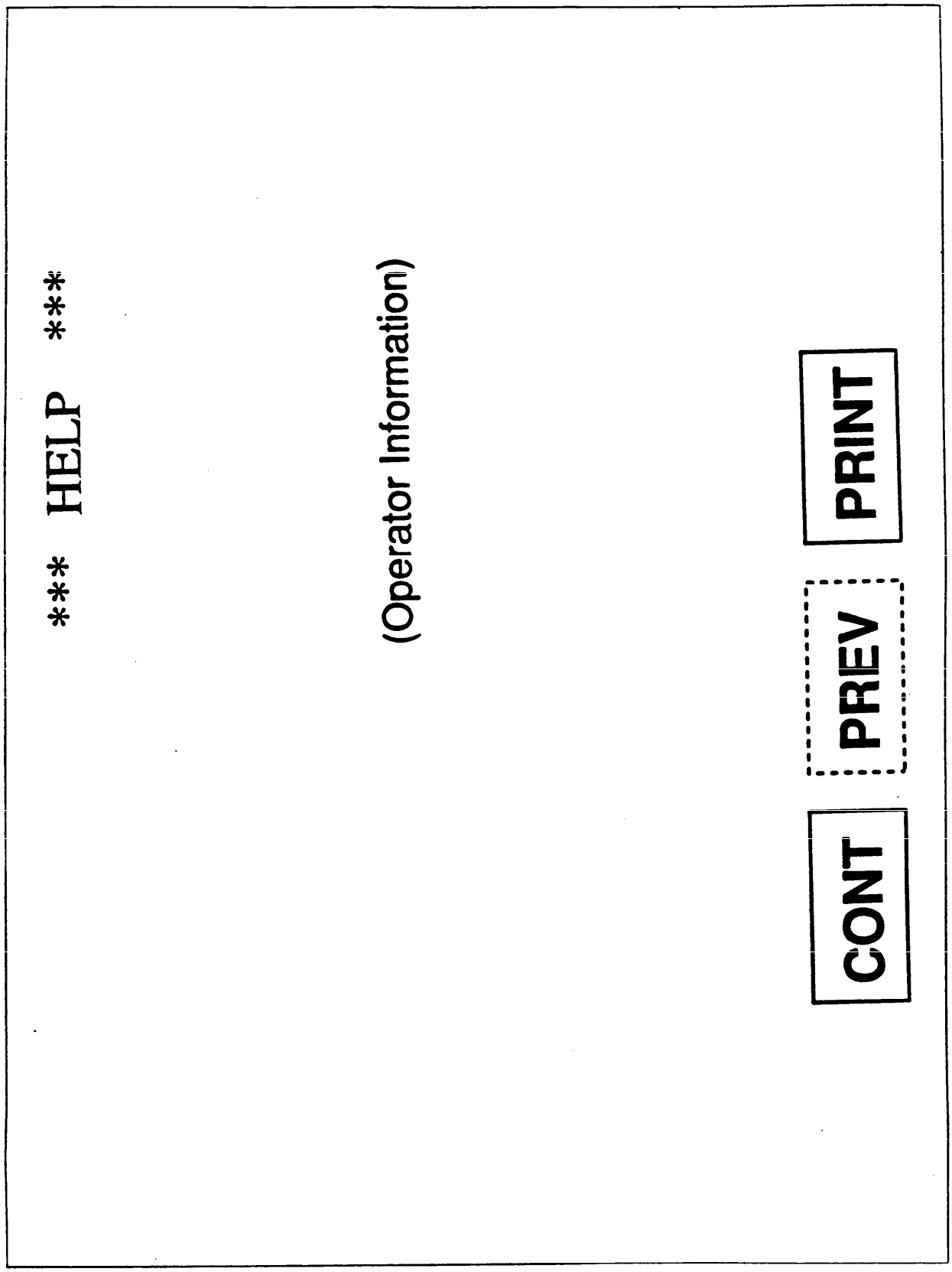

FIGURE 19. Example of a help screen.

Source: https://assist.dla.mil -- Downloaded: 2016-12-10T23:33Z
Check the source to verify that this is the current version before use.

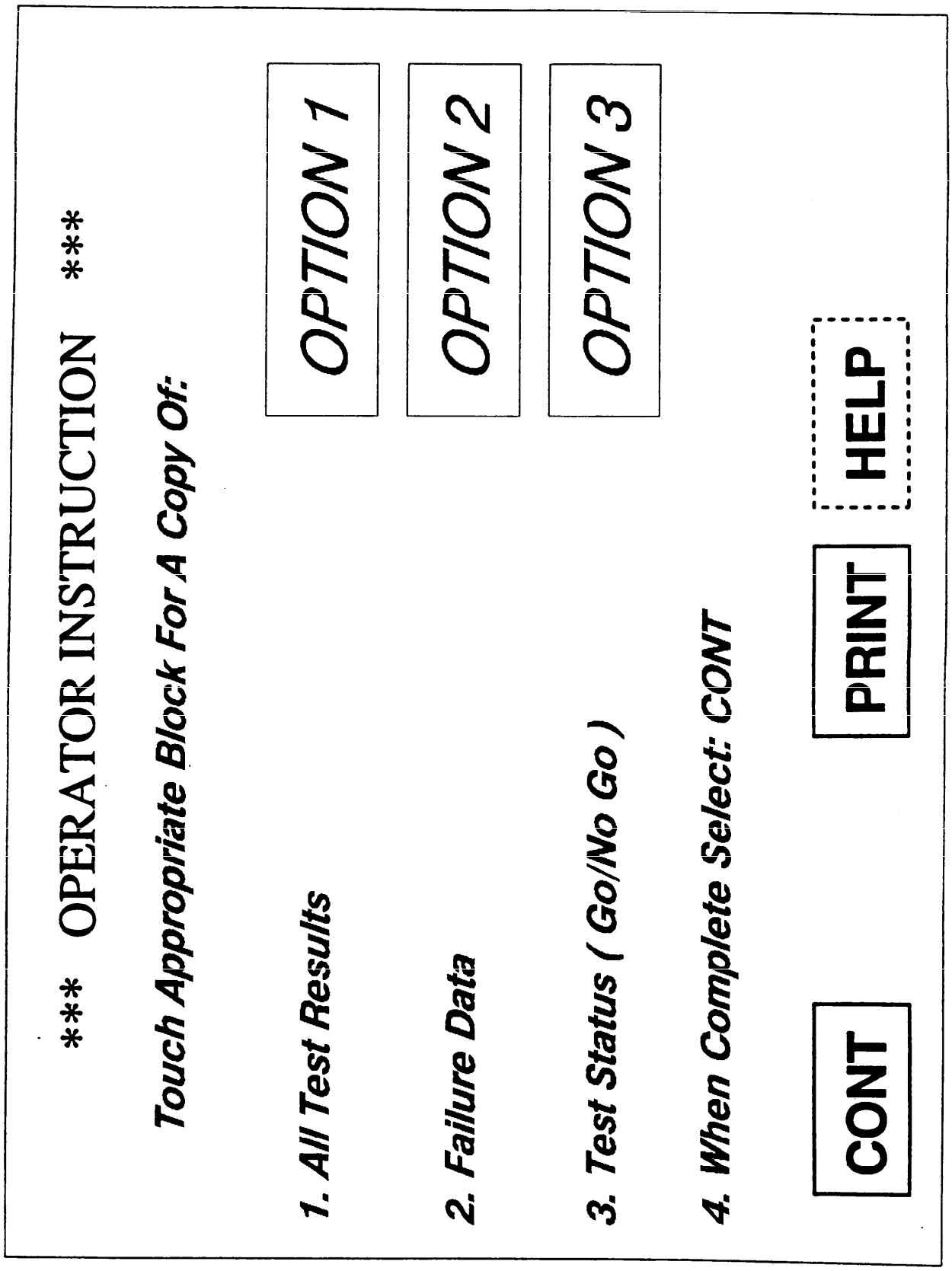

FIGURE 20. Example of an operator instruction screen.

Source: https://assist.dla.mil -- Downloaded: 2016-12-10T23:33Z
Check the source to verify that this is the current version before use.

```
*****************************************
*                                       *
*        COMMENT TEXT GOES HERE         *
*     ----------------------------      *
*                                       *
*****************************************
```

FIGURE 21. Example of a major comment heading.

```
*****      COMMENT TEXT GOES HERE      *****
```

FIGURE 22. Example of a minor comment heading.

Source: https://assist.dla.mil -- Downloaded: 2016-12-10T23:33Z
Check the source to verify that this is the current version before use.

```
*****************************************************************
*                                                               *
*                                                               *
*                                                               *
*              ******************************                   *
*              *                            *                   *
*              *     PROGRAM 12345678       *                   *
*              *                            *                   *
*              ******************************                   *
*                                                               *
*                                                               *
*                                                               *
*                                                               *
*                                                               *
*                                                               *
*                 TEST PROGRAM FOR THE                          *
*                                                               *
*                                                               *
*                  (UUT NOMENCLATURE)                           *
*                 P/N (UUT PART NUMBER)                         *
*                                                               *
*                                                               *
*                                                               *
*                                                               *
*                                                               *
*                                                               *
*                  A COMPONENT OF THE                           *
*               (UUT NEXT HIGHER ASSEMBLY)                      *
*                                                               *
*                                                               *
*                                                               *
*                                                               *
*                 (WEAPON SYSTEM NAME)                          *
*                     WEAPON SYSTEM                             *
*                                                               *
*                                                               *
*                                                               *
*                                                               *
*                                                               *
*                                                               *
*****************************************************************
```

FIGURE 23. Example of test program title block.

Source: https://assist.dla.mil -- Downloaded: 2016-12-10T23:33Z
Check the source to verify that this is the current version before use.

UUT CONFIGURATION DATA

DRAWING NO.	REV	DATE	TYPE
12345678	ORIG	01/25/88	ASSEMBLY
12347890	A	01/31/88	SCHEMATIC
12348905	D	02/10/88	MIL SPEC

FIGURE 24. Example of UUT configuration data.

TEST PROGRAM CONFIGURATION DATA

REVISION	DATE	PROGRAMMER	REASON FOR CHANGE
01	01/25/88	C. SMITH	SUBMITTED TO TRR
02	01/31/88	C. SMITH	TRR COMMENTS
03	02/10/88	J. DOE	INCORPORATE REV B OF SCHEMATIC

FIGURE 25. Example of test program configuration data.

Source: https://assist.dla.mil -- Downloaded: 2016-12-10T23:33Z
Check the source to verify that this is the current version before use.

ENTRY POINT DIRECTORY

TPS MAINTENANCE ENTRY POINT DIRECTORY

ENTRY POINT	APPLICATION
010000	UUT IDENTIFICATION
100000	ATE SURVEY TESTS
150100	ICD CONNECTION
150200	ICD SURVEY TESTS
200100	UUT CONNECTION
200200	UUT STTO TESTS
201000	UUT STATIC TESTS
210100	(FUNCTIONAL TEST #1)
210200	(FUNCTIONAL TEST #2)

FIGURE 26. Example of entry point directory.

Source: https://assist.dla.mil -- Downloaded: 2016-12-10T23:33Z
Check the source to verify that this is the current version before use.

APPENDIX A

GLOSSARY

10. **SCOPE**. This appendix lists the terms that shall be used in the preparation of the test program. The terms are consistent with MIL-STD-334. This appendix is a mandatory part of this specification. The information contained herein is intended for compliance.

20. **APPLICABLE DOCUMENTS**. This section is not applicable to this appendix.

30. **GLOSSARY**.

Terms	Definitions
ADJUST	Changing the setting on a variable component, other than a switch.
CANCEL	Instruct the operator to invalidate a keyboard entry other than a soft key.
CLOSE	Reverse of the 'OPEN' procedure.
COMPARE	Used to establish the relationship between a labeled value and specified limits.
COMPLETE	Used to signify that the operator has satisfactorily accomplished all required actions of a specific display.
CONNECT	Actions calling for the attachment of a cable or cables.
CONT	The word CONTINUE is used to allow the operator to progress to the next screen.
CORRECT	Shall indicate positive status of a condition.
DATA	The raw materials from which the user extracts information. Data may include numbers, words, pictures, etc.
DISCONNECT	Reverse of the 'CONNECT' procedure.

Source: https://assist.dla.mil -- Downloaded: 2016-12-10T23:33Z
Check the source to verify that this is the current version before use.

APPENDIX A

Terms	Definitions
END	If the UUT is successfully repaired, the user can terminate the TPS.
ENTER	Allow operator to input alphanumerics either through a keyboard or touch panel.
ERROR	A message to instruct operator of an incorrect action.
EXIT	Normally returns to the TPS Main Menu, from the Main Menu, returns to the System.
FUNCTION KEY	A key or touch panel instructing the computer to perform a series of steps.
HARD COPY	A printed paper display output by the computer.
HELP	A capability that displays information in response to the user request for on-line guidance.
HIGHLIGHTING	Emphasizing displayed data or format features in some way, for example, through the use of underlining, bolding, or reverse video.
INCORRECT	Indicate a negative result.
INFORMATION	Organized data that users need to successfully perform their tasks. Information serves as an answer to a users question about data.
INPUT	The data entered into a computer for processing.
INSERT	The installation or mating of a ICD or card assembly into a test setup.

Source: https://assist.dla.mil -- Downloaded: 2016-12-10T23:33Z
Check the source to verify that this is the current version before use.

APPENDIX A

Terms	Definitions
INSTALL	Actions requiring the mating of a card assembly, shorting plugs, protective covers, etc.
KEYBOARD	A data entry device geared toward entering alphanumeric data into the computer system.
LABEL identify	A title or description that helps user displayed data.
OPEN	Used for gaining access to items behind hinged panels or covers.
OUTLINE	Each of the components of the test setups display (such as ATE, ICD, ICD, RCVR, etc.) shall be outlined in color.
POSITION	Actions requiring the physical orientation of a test assembly.
PREPARE	Shall be used to direct the configuration of an item through the completion of two or more instructions.
PRESS	Operator actions concerning the activation/deactivation of keyboard rocker type switches on the UUT or ATE system.
PREV	Takes operator back to previous screen.
PRINT	The operator can order a hard copy of screen displays, messages, etc.
PROBE	All actions directing use of the ATE probe.
PROMPT	A cue or a reminder. Also known as a user-prompt.
QUESTION AND ANSWER	A type of dialogue in which the computer displays questions, one at a time for a user to answer.

Source: https://assist.dla.mil -- Downloaded: 2016-12-10T23:33Z
Check the source to verify that this is the current version before use.

APPENDIX A

Terms	Definitions
READ	Used to direct the operator to visually note information from a display or assembly for possible systems input via a subsequent instruction.
READY	Used to indicate that the probe is making good electrical contact at the desired test point and the operator desires to proceed with the measurement, or for a display containing information only.
REMOVE	Reverse of the 'INSTALL' procedure.
REPLACE	Shall be used to direct the removal of a particular item and installation of another like item in its place.
RESTART	A capability that returns a user to the first display in a defined transaction sequence.
RUN	Initiate particular test programs or tests.
SWITCH	Direct operation of all types of switches, other than keyboard/rocker type.
TOUCH	A capability that allows the user to communicate with the computer by touching the screen. Feedback shall be provided to indicate activation.
VERIFY	When the operator is directed to identify the correctness of test information or to indicate the status of a test condition.

Source: https://assist.dla.mil -- Downloaded: 2016-12-10T23:33Z
Check the source to verify that this is the current version before use.

APPENDIX B

APPROVED ABBREVIATIONS

10. **SCOPE**. This appendix lists the abbreviations that reflect the requirements of MIL-STD-12 and MIL-STD-2077. This appendix is a mandatory part of this specification. the information contained herein is intended for compliance.

20. **APPLICABLE DOCUMENTS**. This section is not applicable to this appendix.

30. **ABBREVIATIONS**.

WORD OR WORD COMBINATIONS	ABBREVIATION
ABBREVIATED TEST LANGUAGE FOR ALL SYSTEMS	ATLAS
ALTERNATE	ALTN
ALTERNATING CURRENT	AC
AMPERES	A
ANALOG	ANA
APPROXIMATELY: APPROXIMATE	APPROX
ARBITRARY	ARB
ASSEMBLY	ASSY
AUTOMATIC TEST EQUIPMENT	ATE
AUXILIARY	AUX
AVAILABLE	AVAIL
BASE SHOP TEST FACILITY	BSTF
BASE SHOP TEST STATION	BSTS
BUILDING BLOCK	BB
BUILT IN TEST	BIT
BUILT IN TEST EQUIPMENT	BITE

Source: https://assist.dla.mil -- Downloaded: 2016-12-10T23:33Z
Check the source to verify that this is the current version before use.

APPENDIX B

WORD OR WORD COMBINATIONS	ABBREVIATION
CALIBRATE	CAL
CAPACITANCE: CAPACITOR	CAP
CATHODE RAY TUBE	CRT
CHANNEL	CHAN
CIRCUIT	CKT
COMMERCIAL EQUIVALENT EQUIPMENT	CEE
CONFIGURATION	CONFIG
CURRENT	CUR
DATA TRANSFER UNIT	DTU
DECIBELS	DB
DEGREES	DEG
DIAGNOSTIC	DIAG
DIGITAL	DIG
DIGITAL MULTIMETER	DMM
DIGITAL SUBSYSTEM	DSS
DIRECT CURRENT	DC
EQUAL TO	EQ
EXTERNAL	EXT
FARADS	F
FEET	FT
FILTER	FL

Source: https://assist.dla.mil -- Downloaded: 2016-12-10T23:33Z
Check the source to verify that this is the current version before use.

APPENDIX B

WORD OR WORD COMBINATIONS	ABBREVIATION
FREQUENCY	FREQ
GIGA (PREFIX)	G
GREATER THAN	GT
GREATER THAN OR EQUAL TO	GE
GROUND	GND
HENRIES	H
HERTZ	HZ
HORIZONTAL	HORIZ
IDENTIFICATION	IDENT
INDICATOR	IND
INSTRUCTION	INST
INTEGRATED CIRCUIT	IC
INTERCONNECTING DEVICE	ICD
INTERFACE	INTFC
INTERMEDIATE FREQUENCY	IF
KILO (PREFIX)	K
LESS THAN	LT
LESS THAN OR EQUAL TO	LE
LIMIT	LIM
LINE REPLACEABLE UNIT	LRU
LOWER LIMIT	LL
MEGA (PREFIX)	M

Source: https://assist.dla.mil -- Downloaded: 2016-12-10T23:33Z
Check the source to verify that this is the current version before use.

APPENDIX B

WORD OR WORD COMBINATIONS	ABBREVIATION
MICRO (PREFIX)	U
MILITARY OCCUPATION SPECIALTY	MOS
MILLI (PREFIX)	MILLI
MINIMUM	MIN
MISSION	MSN
MONITOR	MON
NANO (PREFIX)	N
NEGATIVE	NEG
NOT EQUAL TO	NE
NO-GO HI	NH
NO-GO LO	NL
NOMINAL	NOM
NUMBER	NO.
OPERATOR	OPER
OSCILLOSCOPE	SCOPE
OVERFLOW	OVFL
PARAMETER	PRMTR
PERCENT	PCT
PICO (PREFIX)	P
POSITION	POSN
POSITIVE	POS
POTENTIOMETER	POT

Source: https://assist.dla.mil -- Downloaded: 2016-12-10T23:33Z
Check the source to verify that this is the current version before use.

APPENDIX B

WORD OR WORD COMBINATIONS	ABBREVIATION
POWER	PWR
PROBABLE CAUSE OF FAILURE	PCOF
PROCEDURE	PROC
RADIO FREQUENCY	RF
RECEIVER	RCVR
REFERENCE	REF
REMOVE AND REPLACE	R/R
REQUIRED	REQD
RESISTOR: RESISTANCE	RES
SAFE TO TURN ON	STTO
SECOND (TIME)	SEC
SENSITIVE	SENS
SHOP REPLACEABLE UNIT	SRU
SIGNAL	SIG
SIGNATURE	SIGNTR
STATION	STA
STATUS	STAT
SWITCH (NOUN)	SW
SYSTEM	SYS
TEMPERATURE	TEMP
TEST POINT	TP
TEST PROGRAM INSTRUCTION	TPI

Source: https://assist.dla.mil -- Downloaded: 2016-12-10T23:33Z
Check the source to verify that this is the current version before use.

APPENDIX B

WORD OR WORD COMBINATIONS	ABBREVIATION
TEST PROGRAM SET	TPS
TESTING DATA TABLE	TDT
TOLERANCE	TOL
TRANSFORMER	XFMR
TRIGGER	TRIG
UNIT IDENTIFICATION CODE	UIC
UNIT-UNDER-TEST	UUT
UNKNOWN	UNK
UPPER LIMIT	UL
VERTICAL	VERT
VOLTMETER	VM
VOLTS: VOLTAGE	V

Source: https://assist.dla.mil -- Downloaded: 2016-12-10T23:33Z
Check the source to verify that this is the current version before use.

APPENDIX C

ICD SET-UP DIAGRAMS

10. **SCOPE**. This appendix contains examples of screens which may be used to provide the operator with installation & set-up instructions. The information contained herein is intended for guidance only.

20. **APPLICABLE DOCUMENTS**. This section is not applicable to this appendix.

30. **SET-UP DIAGRAMS**. Figures C-1 and C-2 are examples of screens which may be used to instruct the operator in the proper installation and set-up of the ICD. Figure C-1 is an illustration which includes an external load box. Figure C-2 is an illustration which includes an external load card assembly.

Source: https://assist.dla.mil -- Downloaded: 2016-12-10T23:33Z
Check the source to verify that this is the current version before use.

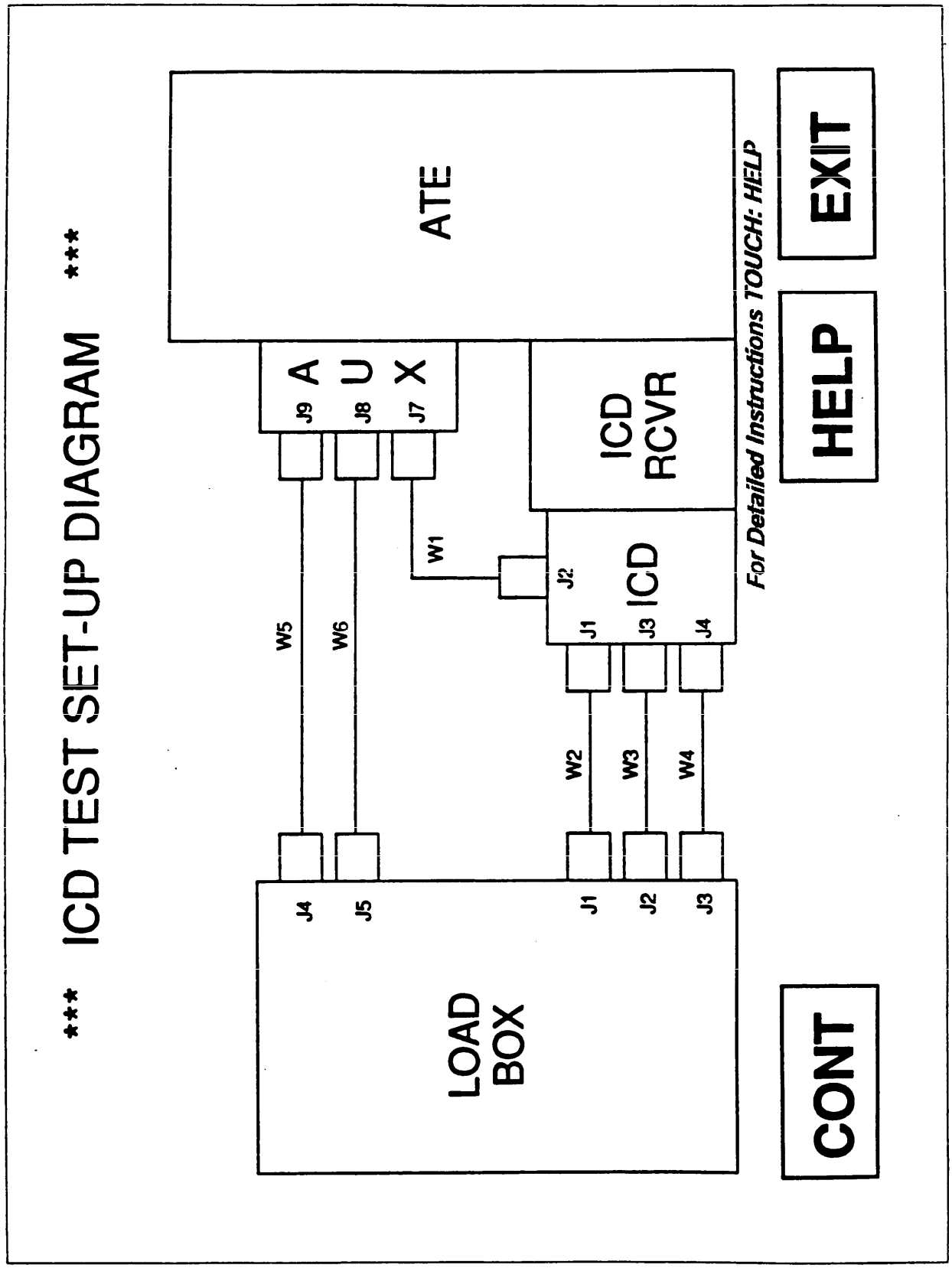

FIGURE C-1. Example of ICD test set-up diagram.

Source: https://assist.dla.mil -- Downloaded: 2016-12-10T23:33Z
Check the source to verify that this is the current version before use.

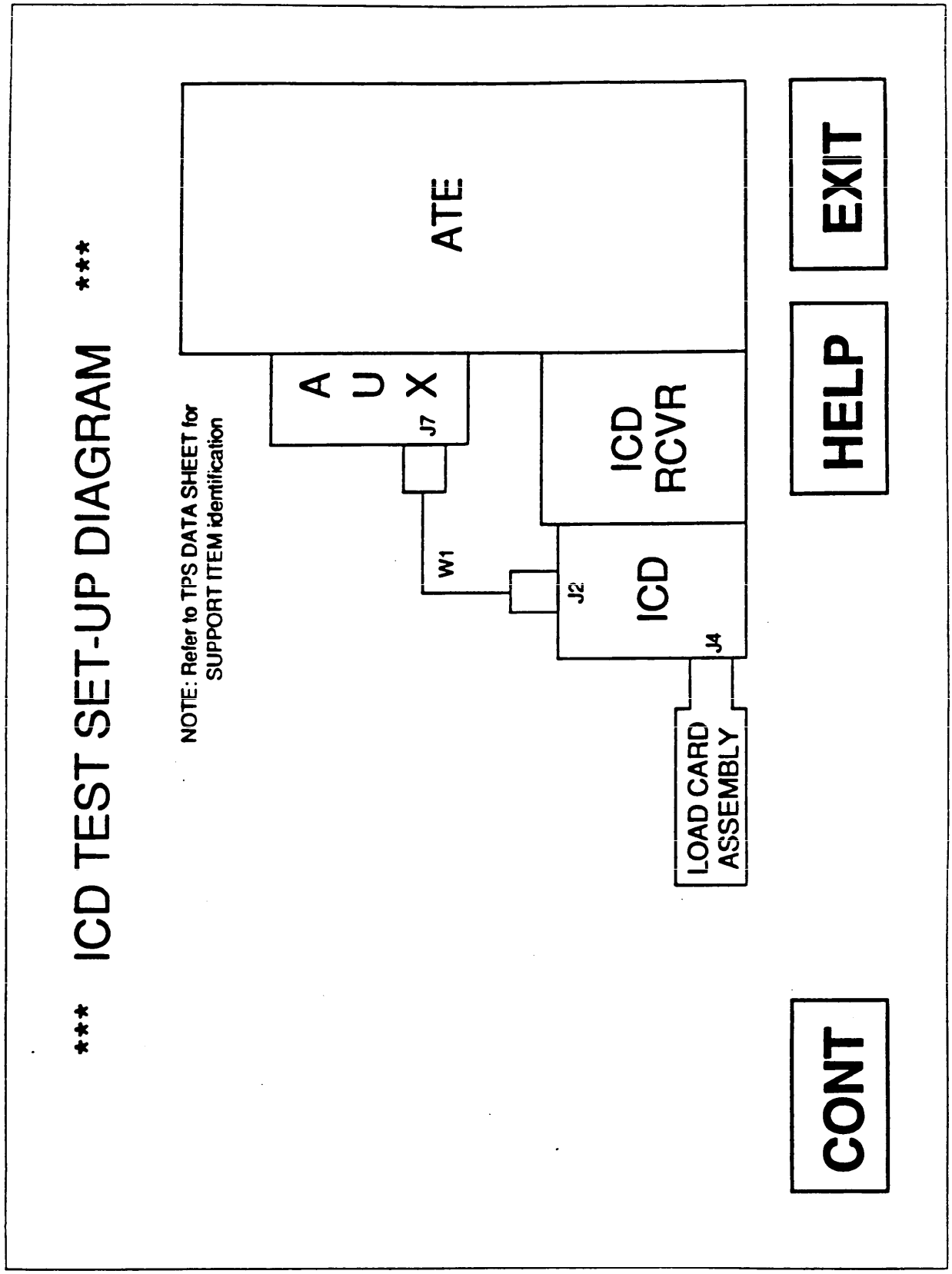

FIGURE C-2. Example of ICD test set-up diagram.

Source: https://assist.dla.mil -- Downloaded: 2016-12-10T23:33Z
Check the source to verify that this is the current version before use.

Source: https://assist.dla.mil -- Downloaded: 2016-12-10T23:33Z
Check the source to verify that this is the current version before use.

APPENDIX D

ADMINISTRATIVE SOFTWARE DATA ELEMENT DEFINITIONS

Data Element	Source	Size	Definition
Record Type	TPS	2	Defines type of record.
Record Length	TPS	2	Sets the number of (field count)elements allowed in a record.
Work Order Record	OPER	15	Identifies a specific job, including retest number. For example, a PCB to be tested is a job. The first 6 digits are the DS UIC. The last 9 make up the sequence number of the work order for that DS unit.
UUT NSN	TPS	16	UUT National Stock Number.
UUT Part Number	TPS	21	UUT Assembly or Part Number.
UUT Serial No.	OPER	15	UUT Serial Number.
End Item Code	OPER	9	A code identifying the system from which (Source of UUT)the UUT was removed.
Defective Part	TPS	5X12	Identifies up to 5 failed components.
Circuit Designator in a UUT			These are identified by the circuit part designator (e.g., R1, U25, C4, etc.).
UUT Owning Unit	OPER	6	The unit identification code of the UIC it turning in or owning the UUT to be tested.
Software Rev No.	TPS	2	Version number of the TPS software.
Failure Test Step	TPS	6	ATLAS statement number of the test step within the TPS.

Source: https://assist.dla.mil -- Downloaded: 2016-12-10T23:33Z
Check the source to verify that this is the current version before use.

APPENDIX D

ADMINISTRATIVE SOFTWARE DATA ELEMENT DEFINITIONS

Failure Value	TPS	10	Readout/failure value/test limitation, at test step of failure.
Diagnostic Time	SYS	6	Defined as the time from the start of a TPS run to completion of the run.
Date and Time	SYS	12	Date and time (local) at start of test (mo, day, yr, hr, min, sec).
Test Station Skill Level	SYS	10	The test station MOS code with Oper. MOS/Skill identifier, if applicable.
Test Station Model Number	SYS	13	ATE model number.
Test Station Serial Number	SYS	4	ATE serial number.

Source: https://assist.dla.mil -- Downloaded: 2016-12-10T23:33Z
Check the source to verify that this is the current version before use.

CUSTODIAN:

ARMY - TM

REVIEW ACTIVITIES:

ARMY: AR, AT, AV, CU, ME, SC, CR, AL, MI, EA

PREPARING ACTIVITY:

ARMY - TM

PROJECT TMSS A277

Source: https://assist.dla.mil -- Downloaded: 2016-12-10T23:33Z
Check the source to verify that this is the current version before use.

Executive Director
USAMC Logistics Support Activity
ATTN: AMXLS-APP
Redstone Arsenal, AL 35898-7466

Source: https://assist.dla.mil -- Downloaded: 2016-12-10T23:33Z
Check the source to verify that this is the current version before use.

STANDARDIZATION DOCUMENT IMPROVEMENT PROPOSAL

INSTRUCTIONS

1. The preparing activity must complete blocks 1,2,3, and 8. In block 1, both the document number and revision letter should be given.
2. The submitter of this form must complete blocks 4,5,6, and 7.
3. The preparing activity must provide a reply within 30 days from receipt of this form.

NOTE: This form may not be used to request copies of documents, nor to request waivers, or clarification of requirements on current contracts. Comments submitted on this form do not constitute or imply authorization to waive any portion of the referenced document(s) or to amend contractual requirements.

I RECOMMEND A CHANGE	1. DOCUMENT NUMBER	2. DOCUMENT DATE *(YYMMDD)*
	MIL-M-49503A(TM)	931001

3. DOCUMENT TITLE
Manuals, Technical: Gen. Style and Formt, Test Prog Sets for Automatic Test Equip

4. NATURE OF CHANGE *(Identify paragraph number and include proposed rewrite, if possible. Attach extra sheets as needed.)*

5. REASON FOR RECOMMENDATION

6. SUBMITTER

a. NAME *(Last, First, Middle Initial)*	b. ORGANIZATION	
c. ADDRESS *(Include Zip Code)*	d. TELEPHONE (Include Area Code) (1) Commercial (2) AUTOVON (If applicable)	7. DATE SUBMITTED *(YYMMDD)*

8. PREPARING ACTIVITY

a. NAME	b. TELEPHONE *(Include Area Code)*
USAMC Logistics Support Activity	(1) Commercial (205) 955-9860 (2) AUTOVON 645-9860
c. ADDRESS *(Include Zip Code)* ATTN: AMXLS-APP Redstone Arsenal, AL 35898-7466	IF YOU DO NOT RECEIVE A REPLY WITHIN 45 DAYS, CONTACT: Defense Quality and Standardization Office 5203 Leesburg Pike, Suite 1403, Falls Church, VA 22041-3466 Telephone (703) 756-2340 AUTOVON 289-2340

Source: https://assist.dla.mil -- Downloaded: 2016-12-10T23:33Z
Check the source to verify that this is the current version before use.