MILITARY SPECIFICATION

EARPHONE ELEMENTS

GENERAL SPECIFICATION FOR

This specification is approved for use by Engineering and Technical Support Division (AFLC/LOIE), Department of the Air Force, and is available for use by all Departments and Agencies of the Department of Defense.

1. SCOPE

1.1 Scope. This specification covers the general requirements for earphone elements. These elements are products which have screw type terminals. The elements are used as specified in 6.1.

2. APPLICABLE DOCUMENTS

2.1 Issues of documents. The following documents, of the issue in effect on date of invitation for bids or request for proposal, form a part of this specification to the extent specified herein.

SPECIFICATIONS

FEDERAL

GG-C-560	-	Compass, Magnetic, Surveyor's, Ball Joint and Jacob's Staff: Transit, Pocket.
QQ-A-591	-	Aluminum Alloy Die Castings.
PPP-B-566	-	Boxes, Folding, Paperboard.
PPP-B-636	-	Boxes, Shipping, Fiberboard.
PPP-B-676	-	Boxes, Setup.
PPP-T-60	-	Tape: Packaging, Waterproof.
PPP-T-76	-	Tape, Pressure-Sensitive Adhesive Paper, (For Carton Sealing).

MILITARY

MIL-P-116	-	Preservation-Packaging, Methods of.
MIL-F-14072	-	Finish for Ground Signal Equipment.
MIL-C-45662	-	Calibration System Requirements.

STANDARDS

FEDERAL

FED-STD-595	-	Colors.

Beneficial comments (recommendations, additions, deletions) and any pertinent data which may be of use in improving this document should be addressed to: Engineering and Technical Support Division, AFLC/LOIE, Wright Patterson AFB, OH 45433, by using the self-addressed Standardization Document Improvement Proposal (DD Form 1426) appearing at the end of this document or by letter.

FSC 5965

Source: https://assist.dla.mil -- Downloaded: 2016-11-16T05:34Z
Check the source to verify that this is the current version before use.

MILITARY

MIL-STD-105 - Sampling Procedures and Tables for Inspection by Attributes.
MIL-STD-129 - Marking for Shipment and Storage.
MIL-STD-147 - Palletized Unit Loads for 40" x 48" Pallets.
MIL-STD-202 - Test Methods for Electronic and Electrical Component Parts.
MIL-STD-454 - Standard General Requirements for Electronic Equipment.
MIL-STD-1285 - Marking of Electrical and Electronic Parts.

(Copies of specifications, standards, drawings, and publications required by contractors in connection with specific procurement functions should be obtained from the procuring activity or as directed by the contracting officer.)

2.2 Other publications. The following documents form a part of this specification to the extent specified herein. Unless otherwise indicated, the issue in effect on date of invitation for bids or request for proposal shall apply.

NATIONAL BUREAU OF STANDARDS

Handbook H28 - Screw Thread Standards for Federal Services.

(Application for copies should be addressed to the Superintendent of Documents, Government Printing Office, Washington, D.C. 20402.)

AMERICAN NATIONAL STANDARDS INSTITUTE, INC.

S1.12-1967 - Laboratory Standard Microphones, Specifications for.
Z24.9-1949 - Coupler Calibration of Earphones, Method for the.

(Application for copies should be addressed to the American National Standards Institute, Inc, 1430 Broadway, New York, New York 10018.)

OFFICE OF SCIENTIFIC RESEARCH AND DEVELOPMENT

National Defense Research Committee

Report No. 3802 - Articulation Testing Method II.

(OSRD Report No. 3802 may be obtained from the Armed Services Technical Information Agency, Dayton, Ohio, giving OSRD Report number, title, and ATI No. 20504.)

(Technical society and technical association specifications and standards are generally available for reference from libraries. They are also distributed among technical groups and using Federal agencies.)

3. REQUIREMENTS

3.1 Specification sheets. The individual item requirements shall be as specified herein and in accordance with the applicable specification sheets. In the event of any conflict between requirements of this specification and the specification sheets, the latter shall govern (see 6.1).

3.2 Qualification. Earphones furnished under this specification shall be products which are qualified for listing on the applicable qualified products list at the time set for opening of bids (see 4.4 and 6.3).

Source: https://assist.dla.mil -- Downloaded: 2016-11-16T05:34Z
Check the source to verify that this is the current version before use.

3.3 Materials. Materials shall be as specified herein. However, when a definite material is not specified, a material shall be used which will enable the earphones to meet the performance requirements of this specification. Acceptance or approval of any constituent material shall not be construed as a guaranty of the acceptance of the finished product. Materials shall not be used that have a measurable change in properties due to aging.

3.3.1 Aluminum. Aluminum shall conform to alloy 13 of QQ-A-591.

3.3.2 Insulating and impregnating compounds. All insulating and impregnating compounds applied, including varnishes, waxes and the like, shall be suitable for each particular application. Compounds shall adequately preserve the dielectric strength of the insulation to which it is applied. The compound used shall not (either in the state of its original application or as a result of aging) show any injurious effect upon the insulation it is to protect, and shall not cause corrosion or deterioration of adjacent metal or plastic parts.

3.3.3 Magnetic stability. The materials used in the magnetic circuit shall be processed and assembled so that the earphone element will suffer no degradation in performance over long periods of use or storage.

3.3.4 Cementing compounds and adhesives. Any cementing compound used in the construction of the earphone element shall show no evidence of loosening nor have other detrimental effects. Water soluble compounds shall not be used.

3.3.5 Fungus resistant. Unless certification is furnished, materials for fabrication of earphone elements covered by this specification shall conform to requirement 4 of MIL-STD-454. When nutrient materials are used, they shall be tested prior to fabrication of the earphones.

3.3.6 Soldering. The materials used for soldering shall conform to requirement 5 of MIL-STD-454.

3.3.7 Voice coil material. The voice coil shall be constructed of round wire having a minimum diameter of 0.003 inch.

3.3.8 Diaphragm material. The diaphragm material shall be metal.

3.4 Design and construction. Earphone elements shall be designed in accordance with the applicable specification sheet and the general requirements specified herein. The elements shall be inherently stable mechanically and acoustically.

3.4.1 Diaphragm. The earphone elements shall be constructed to have equalization of pressure on both sides of the diaphragm when subjected to changes in ambient pressure as low as 3.4 inches of mercury.

3.4.2 Weight. Unless otherwise specified (see 3.1), the maximum weight of each earphone element shall be 3.5 ounces.

3.4.2.1 Transformers. The use of a transformer is permissible; however, when a transformer is used it shall be inside the earphone element case and included as a part of the total weight.

3.4.3 Threaded parts. All threaded parts shall be in accordance with Handbook H28 as specified (see 3.1).

3.4.4 Finish. Final finish shall be in accordance with MIL-F-14072, type I (exposed). Final color shall be in accordance with FED-STD-595 as specified (see 3.1).

Source: https://assist.dla.mil -- Downloaded: 2016-11-16T05:34Z
Check the source to verify that this is the current version before use.

3.4.5 Nominal coil clearance. The nominal coil clearance, as determined by subtracting the maximum coil thickness from the minimum air gap and dividing by two, shall be as specified (see 3.1). Tolerances on the dimensions of component parts and assembly fixtures shall preclude the possibility of the voice coil rubbing against adjacent parts after assembly. Irregularities of the voice coil surface resulting from fabrication processes are considered to be a part of the voice coil.

3.5 Performance characteristics.

3.5.1 Acoustic quality (see 4.6.2). There shall be no buzzes, rattles, nor other spurious sounds that would impair the quality of audio output.

3.5.2 Frequency response (see 4.6.3). The frequency response at ground level and, when applicable, at altitude shall be within the limits specified in the frequency response range.

3.5.2.1 Smoothness of frequency response curve. The response in the 1,000 to 5,000 Hz range shall not vary by more than ±3 dB within any 500 Hz increment.

3.5.3 Impedance (see 4.6.4). The impedance at 1,000 Hz at 20°C (68°F) and between 100 Hz and 3,000 Hz shall be within the specified limits (see 3.1).

3.5.4 Harmonic distortion (see 4.6.5). The harmonic distortion shall not exceed the specified percent (see 3.1) when 1.4 volts is applied to the earphone element (see 3.1).

3.5.5 Dielectric withstanding voltage (see 4.6.6). There shall be no arcing or breakdown between the points of contact.

3.5.6 Stray magnetic field (see 4.6.7). The stray magnetic field of the earphone element shall cause no more than 5° deflection of a magnetic compass at a distance of 8 inches.

3.5.7 Effect of stray magnetic field on the earphone element (see 4.6.8). The earphone element shall not generate a discernible signal when it is 12 inches away from a 400 Hz isolated line carrying 30 amperes of current.

3.5.8 Articulation (see 4.6.9). When specified (see 3.1), the average articulation score of the earphone element shall be approximately equal to or better than the average articulation score of typical H-143/AIC earphones selected from USAF stock when installed in a standard headgear and tested in a representative operating Intercommunication Set AN/AIC-10( ) under these conditions: In simulated jet-type or propeller-type aircraft noise having any level up to and including 120 dB above a reference level of 0.0002 dyne per square centimeter, at ground level and at an altitude of 25,000 feet. An articulation score within 4 points of the reference articulation score shall be considered as indicating "approximately equal" performance.

3.5.9 Endurance (see 4.6.10). There shall be no audible rattles or other signs of failure, and the frequency response shall not vary more than ±3 dB from the initial reading recorded in 3.5.2.

3.5.10 Moisture resistance (see 4.6.11). The frequency response, harmonic distortion, and dielectric withstanding voltage shall be as specified in 3.5.2, 3.5.4, and 3.5.5, respectively. There shall be no loosening or deformation of parts or other damage.

3.5.11 Barometric pressure (reduced) (see 4.6.12). The frequency response shall not vary more than ±3 dB from the initial reading recorded in accordance with 3.5.2.

Source: https://assist.dla.mil -- Downloaded: 2016-11-16T05:34Z
Check the source to verify that this is the current version before use.

3.5.12 Thermal shock (see 4.6.13). The frequency response shall not vary more than ±3 dB from the initial reading recorded in accordance with 3.5.2.

3.5.13 Vibration, high frequency (see 4.6.14). There shall be no structural failure or other defects, and the frequency response shall not vary more than ±3 dB from the initial reading recorded in accordance with 3.5.2.

3.5.14 Shock (specified pulse)(see 4.6.15). There shall be no evidence of failure from breaking cracks, deformation or loosening of parts which would cause failure of the product to operate. Minor dents and scratches should be ignored. The frequency response shall not vary more than ±3 dB from the initial reading (see 3.5.2).

3.5.15 Salt spray (corrosion) (see 4.6.16). After exposure the earphone elements, when tested as specified in 4.6.16c., shall meet the acoustic quality requirements of 3.5.1. Within 3 hours after the drying period the earphone elements, when tested as specified in 4.6.16e., shall meet the requirements of frequency response of 3.5.2 and the dielectric withstanding voltage of 3.5.5.

3.6 Marking. Earphone elements shall be marked in accordance with MIL-STD-1285 with the type designation and manufacturer's code symbol or name.

3.7 Workmanship. Earphone elements shall be processed in such a manner as to be uniform in quality and shall be free from loose parts, excess solder, sharp edges, burrs, flaking, scratches, peeling, metal chips, and foreign material. Soldering, impregnation of coils, plating, staking, riveting, and machine screw assemblage shall be neat and thorough. The coil shall be centered properly, void of foreign objects in the air gap and shall not drag on the frame or magnet. There shall be no foreign material present in the air gap when viewed through a microscope having a minimum magnification of 15.

4. QUALITY ASSURANCE PROVISIONS

4.1 Responsibility for inspection. Unless otherwise specified in the contract or purchase order, the contractor is responsible for the performance of all inspection requirements as specified herein. Except as otherwise specified in the contract or order, the contractor may use his own or any other facilities suitable for the performance of the inspection requirements specified herein, unless disapproved by the Government. The Government reserves the right to perform any of the inspections set forth in the specification where such inspections are deemed necessary to assure supplies and services conform to prescribed requirements.

4.1.1 Test equipment and inspection facilities. Test and measuring equipment and inspection facilities of sufficient accuracy, quality, and quantity to permit performance of the required inspection shall be established and maintained by the contractor. The establishment and maintenance of a calibration system to control the accuracy of the measuring and test equipment shall be in accordance with MIL-C-45662.

4.2 Classification of inspections. The inspections specified herein are classified as follows:

a. Qualification inspection (see 4.4).
b. Quality conformance inspection (see 4.5).

4.3 Inspection conditions. Unless otherwise specified herein, all inspections shall be performed under the following conditions:

Temperature - Room ambient, +15°C (+59°F) to +35°C (+95°F).
Pressure - Normal atmospheric.
Humidity - Room ambient up to 90 percent relative humidity.

All acoustical testing shall be made a free field environment (see 6.6). All acoustical measurements shall be made above a reference level of 0.0002 dyne per square centimeter.

Source: https://assist.dla.mil -- Downloaded: 2016-11-16T05:34Z
Check the source to verify that this is the current version before use.

4.4 Qualification inspection. Qualification inspection shall be performed at a laboratory acceptable to the Government (see 6.3) on sample units produced with equipment and procedures normally used in production.

4.4.1 Sample size. Six earphone elements shall be subjected to the qualification inspection.

4.4.2 Inspection routine. The sample shall be subjected to the inspections specified in table I, in the order shown. All sample units shall be subjected to the inspections of group I. The sample shall then be divided equally into two groups of three units each, and subjected to the inspection for their particular group.

TABLE I. Qualification inspection.

Inspection	Requirement paragraph	Test method paragraph
Group I		
Visual and mechanical examination	3.3, 3.4, 3.6, and 3.7	4.6.1
Acoustic quality	3.5.1	4.6.2
Frequency response	3.5.2	4.6.3
Impedance	3.5.3	4.6.4
Harmonic distortion	3.5.4	4.6.5
Dielectric withstanding voltage	3.5.5	4.6.6
Stray magnetic field	3.5.6	4.6.7
Effect of stray magnetic field on the earphone element	3.5.7	4.6.8
Articulation (when specified)	3.5.8	4.6.9
Endurance	3.5.9	4.6.10
Group II		
Moisture resistance	3.5.10	4.6.11
Group III		
Barometric pressure (reduced)	3.5.11	4.6.12
Thermal shock	3.5.12	4.6.13
Vibration, high frequency	3.5.13	4.6.14
Shock (specified pulse)	3.5.14	4.6.15
Salt spray (corrosion)	3.5.15	4.6.16

4.4.3 Failures. One or more failures shall be cause for refusal to grant qualification approval.

4.4.4 Retention of qualification. To retain qualification, the contractor shall forward a report at 12-month intervals to the qualifying activity. The qualifying activity shall establish the initial reporting date. The report shall consist of:

a. A summary of the results of the tests performed for inspection of product for delivery, groups A and B, indicating as a minimum the number of lots that have passed and the number that have failed. The results of tests of all reworked lots shall be identified and accounted for.
b. A summary of the results of tests performed for periodic inspection, group C, including the number and mode of failures. The summary shall include results of all periodic inspection tests performed and completed during the 12-month period. If the summary of the test results indicates nonconformance with specification requirements, and corrective action acceptable to the qualifying activity has not been taken, action may be taken to remove the failing product from the qualified products list.

Source: https://assist.dla.mil -- Downloaded: 2016-11-16T05:34Z
Check the source to verify that this is the current version before use.

Failure to submit the report within 30 days after the end of each 12-month period may result in loss of qualification for the product. In addition to the periodic submission of inspection data, the contractor shall immediately notify the qualifying activity at any time during the 12-month period that the inspection data indicates failure of the qualified product to meet the requirements of this specification.

In the event that no production occurred during the reporting period, a report shall be submitted certifying that the company still has the capabilities and facilities necessary to produce the item. If during two consecutive reporting periods, there has been no production, the manufacturer may be required, at the discretion of the qualifying activity, to submit the earphone elements to testing in accordance with the qualification inspection requirements.

4.5 Quality conformance inspection.

4.5.1 Inspection of product for delivery. Inspection of product for delivery shall consist of groups A and B inspections.

4.5.1.1 Inspection lot. An inspection lot shall consist of all earphone elements covered by a single specification sheet produced under essentially the same conditions, and offered for inspection at one time.

4.5.1.2 Group A inspection. Group A inspection shall consist of the inspections specified in table II, in the order shown.

4.5.1.2.1 Sampling plan. Statistical sampling and inspection shall be in accordance with MIL-STD-105 for general inspection level II. The acceptable quality level (AQL) shall be as specified in table II. Major and minor defects shall be as defined in MIL-STD-105.

TABLE II. Group A inspection.

Inspection	Requirement paragraph	Test method paragraph	AQL (percent defective)	
			Major	Minor
Visual and mechanical examination- - - - - - -	3.3, 3.4, 3.6, and 3.7	4.6.1	1.0	4.0
Frequency response - - - -	3.5.2	4.6.3	1.0	None
Impedance- - - - - - - - -	3.5.3	4.6.4		
Harmonic distortion- - - -	3.5.4	4.6.5		
Acoustic quality 1/ - - -	3.5.1	4.6.2		

1/ This test is to be performed on a 100 percent basis.

4.5.1.2.2 Rejected lots. If an inspection lot is rejected, the contractor may rework it to correct the defects, or screen out the defective units, and resubmit for reinspection. Resubmitted lots shall be inspected using tightened inspection. Such lots shall be separate from new lots, and shall be clearly identified as reinspected lots.

4.5.1.3 Group B inspection. Group B inspection shall consist of the examinations and tests specified in table III in the order shown, and shall be made on sample units which have been subjected to and have passed the group A inspection.

4.5.1.3.1 Sampling plan. The sampling plan shall be in accordance with MIL-STD-105 for special inspection level S-4. The sample size shall be based on the inspection lot size from which the sample was selected for group A inspection. The AQL shall be 2.5 percent defective.

Source: https://assist.dla.mil -- Downloaded: 2016-11-16T05:34Z
Check the source to verify that this is the current version before use.

TABLE III. Group B inspection.

Inspection	Requirement paragraph	Test method paragraph
Dielectric withstanding voltage- - - - -	3.5.5	4.6.6
Stray magnetic field - - - - - - - - - -	3.5.6	4.6.7

4.5.1.3.2 Rejected lots. If an inspection lot is rejected, the contractor may rework it to correct the defects, or screen out the defective units, and resubmit for reinspection. Resubmitted lots shall be inspected using tightened inspection. Such lots shall be separate from new lots, and shall be clearly identified as reinspected lots.

4.5.1.3.3 Disposition of sample units. Sample units which have passed all the group B inspection may be delivered on the contract or purchase order, if the lot is accepted and the sample units are still within specified electrical tolerances.

4.5.2 Periodic inspection. Periodic inspection shall consist of group C inspection. Except where the results of these inspections show noncompliance with the applicable requirements (see 6.4), delivery of products which have passed groups A and B shall not be delayed pending the results of these periodic inspections.

4.5.2.1 Group C inspection. Group C inspection shall consist of the inspections specified in table IV, in the order shown. Group C inspection shall be made on sample units selected from inspection lots which have passed the groups A and B inspections.

4.5.2.1.1 Sampling plan. Four sample units shall be selected from each 12-months' production, or each 1,000 units whichever occurs first, after date of notification of qualification.

TABLE IV. Group C inspection.

Inspection	Requirement paragraph	Test method paragraph	Number of sample units to be inspected
Subgroup 1			
Endurance- - - - - - - - - - - - - - -	3.5.9	4.6.10	2
Subgroup 2			
Moisture resistance- - - - - - - - - -	3.5.10	4.6.11	2
Visual and mechanical examination- - -	3.3, 3.4, 3.6, and 3.7	4.6.1	

4.5.2.1.2 Failures. If one or more sample units fail to pass group C inspection, the sample shall be considered to have failed.

4.5.2.1.3 Disposition of sample units. Sample units which have been subjected to group C inspection shall not be delivered on the contract.

4.5.3 Inspection of packaging. The sampling and inspection of the preservation-packaging and interior package marking shall be in accordance with the group A and B quality conformance inspection requirements of MIL-P-116. The sampling and inspection of the packing and marking for shipment and storage shall be in accordance with the quality assurance provisions of the applicable container specification and the marking requirements of MIL-STD-129.

Source: https://assist.dla.mil -- Downloaded: 2016-11-16T05:34Z
Check the source to verify that this is the current version before use.

4.6 Methods of examination and test.

4.6.1 Visual and mechanical examination. Earphone elements shall be examined to verify that the design, physical dimensions, weight, marking, and workmanship are in accordance with the applicable requirement (see 3.3, 3.4, 3.6, and 3.7).

4.6.2 Acoustic quality (see 3.5.1). The 1.4 ±0.1 volts rms shall be applied continuously to the terminals of the earphone element. The frequency shall be varied continuously from the low end of the frequency response range, to the high, and back to low. The acoustic output shall be checked for buzzing, rattling, and other spurious sounds.

4.6.3 Frequency response (see 3.5.2). The earphone element shall be mounted as shown in the test circuit (see figure 1). Adjust the output from the audio oscillator to 1 milliwatt at 1,000 Hz as measured by the vacuum tube voltmeter (VTVM No. 1). For qualification inspection, the frequency response shall be measured and recorded in accordance with 4.6.3.1. For quality conformance inspection, the frequency response shall be measured and recorded in accordance with 4.6.3.1 or 4.6.3.2, at the option of the contractor. The sensitivity shall be observed at 1,000 Hz at ground level and when specified, at 25,000 feet and meet the values specified.

4.6.3.1 Automatic recorder. The acoustic output shall be recorded on a direct writing strip graph using an automatic plotter or curve tracer with a minimum writing speed of 10 inches per second and a maximum chart speed of 30 inches per minute. The output shall be recorded in the dB value above 0.0002 dyne per square centimeter. The writing speed and chart speed shall be noted.

4.6.3.2 Point-to-point. Measure the acoustic output from the calibrated microphone and preamplifier unit as indicated by the reading of VTVM No. 2 (see figure 1), and convert this reading to the equivalent dB value above 0.0002 dyne per square centimeter, using the most recent available calibration curve for the test microphone. Measure and record the dB increments of 100 Hz from 100 to 1,000 Hz and at increments of 250 Hz from 1,000 to 8,000 Hz. The graph shall show the dB values on the ordinate scale, reading from 80 to 140 dB above 0.0002 dyne per square centimeter, and the Hz value on the abscissa scale, reading from 100 to 10,000 Hz inclusive.

4.6.4 Impedance (see 3.5.3). The earphone element shall be mounted in the coupler as shown in figure 1. A potential of 1.1 ±.2 volts rms shall be applied across the terminals, and the impedance shall be measured over the frequency response range. The impedance shall be measured by measuring the voltage across and the current through the earphone element, or the impedance may be measured by the voltage method. Recordings may be made by either the point-to-point method or by an automatic recorder.

4.6.4.1 Automatic recorder. The impedance shall be recorded on a direct writing strip graph using an automatic plotter or curve tracer with a minimum writing speed of 10 inches per second and a maximum chart speed of 30 inches per minute. The output shall be recorded in ohms. The writing speed and chart speed shall be noted.

4.6.4.2 Voltage method. At the option of the manufacturer, the impedance may be calculated by using a voltmeter. Using a circuit similar to that shown in figure 1, measure the voltage across the 300 ohm resistor and across the earphone element under test. The earphone element impedance (Z) is equal to $300 \times \frac{V_b}{V_a - V_b}$.

4.6.4.3 Point-to-point. Measure and record the impedance in ohms in increments of 100 Hz from 100 to 1,000 Hz and at increments of 250 Hz from 1,000 to 3,000 Hz. The graph shall show the impedance on the ordinate scale and the Hz value on the abscissa scale, recording from 100 to 10,000 Hz inclusive.

Source: https://assist.dla.mil -- Downloaded: 2016-11-16T05:34Z
Check the source to verify that this is the current version before use.

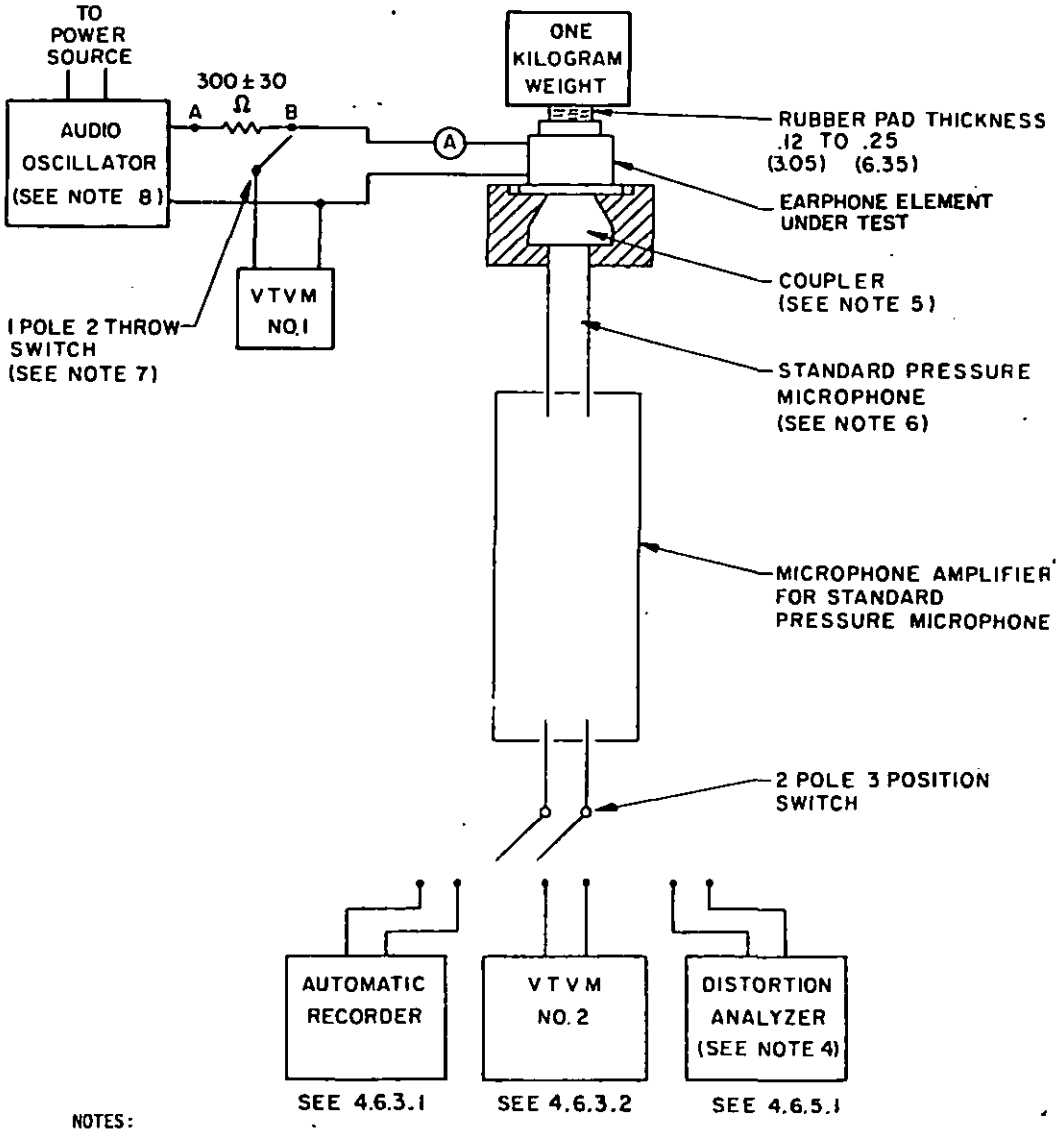

NOTES:
1. Dimensions are in inches.
2. Metric equivalents (to the nearest .01 mm) are given for general information only and are based upon 1 inch = 25.4 mm.
3. Metric equivalents are in parentheses.
4. See 4.6.4.1 for type and requirement for distortion alalyzer.
5. Coupler in accordance with ANSI Z24.9-1949.
6. Standard pressure microphone, in accordance with ANSI S1.12-1967.
7. Use switch position B for paragraph 4.6.3 and switch position A for all other paragraphs requiring electrical tests.
8. Audio oscillator output shall have characteristic output impedance of 600 ohms.
9. "Off" position on switches is optional.
10. Either voltmeter method or voltmeter-ammeter method is acceptable.

FIGURE 1. Typical test circuit.

Source: https://assist.dla.mil -- Downloaded: 2016-11-16T05:34Z
Check the source to verify that this is the current version before use.

4.6.5 Harmonic distortion (see 3.5.4). The earphone element shall be tested while connected to the test circuit and mounted on the coupler as shown in figure 1. Distortion shall be measured at 200 Hz and at frequencies between 400 and 7,000 Hz, as are required to determine at what frequencies (in this range) maximum distortion exists.

4.6.5.1 Distortion analyzer. The total harmonic distortion shall be determined by a distortion analyzer having the following minimum requirements:

a. Frequency range - Fundamental frequency from 20 to 20,000 Hz.
b. Frequency calibration - ±2 percent from 20 to 20,000 Hz.
c. Harmonic measurement - ±3 percent of full scale value for distortion levels as low as 0.5 percent.

4.6.6 Dielectric withstanding voltage (see 3.5.5). The earphone element shall be tested in accordance with method 301 of MIL-STD-202. The following details shall apply:

a. Test voltage - 500 volts.
b. Nature of potential - 60 Hz.
c. Points of application - Between one of the terminals and the metallic case, or other metallic surface which is not covered by a nonconducting coating. Simultaneously, the coil shall be excited with 9.5 volts rms at 200 Hz.

4.6.7 Stray magnetic field (see 3.5.6). Stray magnetic field measurements shall be made in a shielded room or in an area free from appreciable magnetic disturbances. The earphone element shall be rotated on its axis at various points of an 8 inch radius sphere surrounding a compass which meets the requirements of GG-C-560a, Type II or equivalent.

4.6.8 Effect of stray magnetic field on the earphone element (see 3.5.7). The earphone element shall be firmly pressed against the ear, and the listener shall listen for 400 Hz pickup when the earphone element is oriented for maximum signal 1 foot away from a 400 Hz power line carrying a current of 30 amperes. The return line shall be at least 15 feet away from the line used for the test. This test shall be conducted in an ambient acoustic noise level of not more than 65 dB with the earphone element terminals open, and short-circuited, respectively.

4.6.9 Articulation (see 3.5.8). The articulation tests shall be conducted in accordance with Office of Scientific Research and Development Report No. 3802. A minimum of two talkers and five listeners shall be used for each test, and each test shall include a sufficient number of words to assure that the resulting scores are statistically significant. Articulation tests will be performed by the procuring activity on representative earphone elements selected from the samples submitted to the Government by the manufacturer. It is not mandatory that the articulation tests be performed by the manufacturer.

4.6.10 Endurance (see 3.5.9). Audio power of 300 milliwatts rms at 1,000 Hz shall be applied continuously to each earphone element under test for 8 hours. During the last hour of test, the earphone element shall be checked for audible rattles or other signs of failure. At the end of the 8 hours, the frequency response shall be measured as specified in 4.6.3.

4.6.11 Moisture resistance (see 3.5.10). The earphone element shall be tested in accordance with method 106 of MIL-STD-202. The following details and exceptions shall apply:

a. Initial measurements - Not applicable.
b. Mounting - Any convenient mounting with the front face of the earphone element exposed and parallel with the vertical plane.
c. Loading voltage - Not applicable.

Source: https://assist.dla.mil -- Downloaded: 2016-11-16T05:34Z
Check the source to verify that this is the current version before use.

d. Final measurements - At the completion of the tenth cycle and following a 24-hour period at 25° ±5°C and 50 ±5 percent relative humidity, the earphone element shall be tested for frequency response, harmonic distortion, and dielectric withstanding voltage in accordance with 4.6.3, 4.6.5, and 4.6.6, respectively, and examined for loose or deformed parts and other damage.

4.6.12 Barometric pressure (reduced) (see 3.5.11). Earphone elements shall be tested in accordance with method 105 of MIL-STD-202. The following details shall apply:

a. Method of mounting - Not applicable.
b. Test condition letter - B.
c. Tests during subjection to reduced pressure - None required.
d. Tests after subjection to reduced pressure - Frequency response in accordance with 4.6.3.
e. Exposure time prior to measurements - 10 minutes.

4.6.13 Thermal shock (see 3.5.12). Earphone elements shall be tested in accordance with method 107 of MIL-STD-202. The following details shall apply:

a. Test condition letter - A.
b. Measurement after cycling - Frequency response in accordance with 4.6.3.

4.6.14 Vibration, high frequency (see 3.5.13). Earphone elements shall be tested in accordance with method 204 of MIL-STD-202. The following details shall apply:

a. Mounting specimens - Diaphragm of the earphone element shall be in a vertical plane on the vibrating machine.
b. Electrical load conditions - 60 milliwatts rms at 1,000 Hz applied to the earphone elements.
c. Test condition letter - A.
d. Measurement after vibration - Frequency response in accordance with 4.6.3.

4.6.15 Shock (specified pulse) (see 3.5.14). Earphone elements shall be tested in accordance with method 213 of MIL-STD-202. The following details shall apply:

a. Mounting method - The earphone element shall be rigidly attached to an auxiliary mounting plate. The auxiliary mounting plate shall then be rigidly attached to the anvil plate of the shock machine.
b. Test condition letter - G.
c. Measurement after shock - Frequency response in accordance with 4.6.3.

4.6.16 Salt spray (corrosion) (see 3.5.15). Earphone elements shall be tested in accordance with method 101 of MIL-STD-202. The following details and exceptions shall apply:

a. Applicable salt solution - 5 percent.
b. Test condition letter - A.
c. Measurement after exposure - Acoustic quality, in accordance with 4.6.2.
d. Additional conditioning - Earphone elements shall be cleaned as prescribed, and dried for 48 hours in a chamber having an ambient temperature of 16 to 32°C and a maximum relative humidity of 30 percent.
e. Additional measurements - Within 3 hours after the drying period, the earphone elements shall be tested for frequency response and dielectric withstanding voltage in accordance with 4.6.3 and 4.6.6, respectively.

5. PACKAGING

5.1 Preservation-packaging. Preservation-packaging shall be level A or C, or as specified (see 6.2).

Source: https://assist.dla.mil -- Downloaded: 2016-11-16T05:34Z
Check the source to verify that this is the current version before use.

5.1.1 Level A.

5.1.1.1 Cleaning. Earphone elements shall be cleaned in accordance with MIL-P-116, process C-1.

5.1.1.2 Drying. Earphone elements shall be dried in accordance with MIL-P-116.

5.1.1.3 Preservative application. Preservatives shall not be used.

5.1.1.4 Unit packaging. Unless otherwise specified (see 6.2), each earphone element shall be individually unit packaged in accordance with MIL-P-116, submethod IA-8 insuring compliance with the applicable requirements of that specification.

5.1.1.5 Intermediate packaging. Earphone elements packaged as specified in 5.1.1.4, shall be placed in intermediate containers conforming to PPP-B-566 or PPP-B-676. Intermediate containers shall be uniform in size, shape and quantities, shall be of minimum tare and cube and shall contain multiples of five unit packages, not to exceed 100 unit packages. No intermediate packaging is required when the total quantity shipped to a single destination is less than 100 unit packages.

5.1.2 Level C. Earphone elements shall be clean, dry and packaged in a manner that will afford adequate protection against corrosion, deterioration and physical damage during shipment from suppl, source to the first receiving activity. This level may conform to the contractor's commercial practice when such meets the requirements of this level.

5.2 Packing. Packing shall be level A, B, or C, or as specified (see 6.2).

5.2.1 Level A. The packaged earphone elements shall be packed in fiberboard containers conforming to PPP-B-636, class weather resistant, style optional, special requirements. In lieu of the closure and waterproofing requirement in the appendix of PPP-B-636, closure and waterproofing shall be accomplished by sealing all seams, corners, and manufacturer's joint with tape, 2 inches minimum width, conforming to PPP-T-60, class 1 or PPP-T-76. Banding (reinforcement requirements) shall be applied in accordance with the appendix to PPP-B-636 using nonmetallic or tape banding only.

5.2.2 Level B. The packaged earphone elements shall be packed in fiberboard containers conforming to PPP-B-636, class domestic, style optional, special requirements. Closures shall be in accordance with the appendix thereto.

5.2.3 Level C. The packaged earphone elements shall be packed in shipping containers in a manner that will afford adequate protection against damage during direct shipment from the supply source to the first receiving activity. These packs shall conform to the applicable carrier rules and regulations and may be the contractor's commercial practice when such meets the requirements of this level.

5.2.4 Unitized loads. Unitized loads, commensurate with the level of packing specified in the contract or order, shall be used whenever total quantities for shipment to one destination equal 40 cubic feet or more. Quantities less than 40 cubic feet need not be unitized. Unitized loads shall be uniform in size and quantities to the greatest extent practicable.

5.2.4.1 Level A. Earphone elements, packed as specified in 5.2.1, shall be unitized on pallets in conformance with MIL-STD-147, load type I, with a fiberboard cap (storage aid 4) positioned over the load.

5.2.4.2 Level B. Earphone elements, packed as specified in 5.2.2, shall be unitized as specified in 5.2.4.1 except that the fiberboard caps shall be class domestic.

Source: https://assist.dla.mil -- Downloaded: 2016-11-16T05:34Z
Check the source to verify that this is the current version before use.

5.2.4.3 Level C. Earphone elements, packed as specified in 5.2.3, shall be unitized with pallets and caps of the type, size, and kind commonly used for this purpose. These unitized loads shall conform to the applicable carrier rules and regulations and may be the contractor's commercial practice when such meets the requirements of this level.

5.3 Marking. In addition to any special marking required by the contract (see 6.2), each unit package, intermediate and exterior container and unitized load shall be marked in accordance with MIL-STD-129.

5.4 General.

5.4.1 Exterior containers. Exterior containers (see 5.2.1, 5.2.2, and 5.2.3) shall be of a minimum tare and cube consistent with the protection required and shall contain equal quantities of identical stock numbered items to the greatest extent practicable.

5.4.2 Packaging inspection. The inspection of these packaging requirements shall be in accordance with 4.5.3.

5.4.3 Inspection of packaging. The sampling and inspection of the preservation-packaging and interior package marking shall be in accordance with the group A and B quality conformance inspection requirements of MIL-P-116. The sampling and inspection of the packing and marking for shipment and storage shall be in accordance with the quality assurance provisions of the applicable container specification and the marking requirements of MIL-STD-129.

6. NOTES

6.1 Intended use. These earphone elements are the moving coil type which are a component of various headband, helmet headsets, and where applicable, telephone handsets which are a part of the Intercommunication Set AN/AIC-10( ).

6.2 Ordering data. Procurement documents should specify the following:

a. Title, number, and date of this specification.
b. Levels of preservation-packaging and packing required (see 5.1 and 5.2).
c. Method of preservation, if other than submethod IA-8 (see 5.1.1.4).
d. Special marking, if required (see 5.3).

6.3 Qualification. With respect to products requiring qualification, awards will be made only for products which are at the time set for opening of bids, qualified for inclusion in the applicable qualified products list whether or not such products have actually been so listed by that date. The attention of the suppliers is called to these requirements, and manufacturers are urged to arrange to have the products that they propose to offer to the Federal Government tested for qualification in order that they may be eligible to be awarded contracts or orders for the products covered by this specification. The activity responsible for the qualified products list is the Engineering and Technical Support Division, AFLC/LOIE, Wright Patterson AFB, OH 45433; however, information pertaining to qualification of products may be obtained from the Defense Electronics Supply Center (DESC-EQ), Dayton, OH 45444, agent for administration of the qualified products list.

6.4 Noncompliance. If a sample fails to pass group C inspection, the manufacturer shall notify the qualifying activity and the cognizant inspection activity of such failure and take corrective action on the materials or processes, or both, as warranted, and on all units of product which can be corrected and which were manufactured under essentially the same conditions, with essentially the same materials, processes, etc., and which are considered subject to the same failure. Acceptance and shipment of the product shall be discontinued until corrective action, acceptable to the qualifying

Source: https://assist.dla.mil -- Downloaded: 2016-11-16T05:34Z
Check the source to verify that this is the current version before use.

activity has been taken. After the corrective action has been taken, group C inspection shall be repeated on additional sample units (all inspections, or the inspection which the original sample failed), at the option of the qualifying activity Groups A and B inspections may be reinstituted; however, final acceptance and shipment shall be withheld until the group C inspection has shown that the corrective action was successful. In the event of failure after reinspection, information concerning the failure shall be furnished to the cognizant inspection activity and the qualifying activity.

6.5 Changes from previous issue. Asterisks are not used in this revision to identify changes with respect to the previous issue, due to the extensiveness of the changes.

6.6 Free field environment. The acoustic environment shall simulate free-field conditions to the extent that the inverse-pressure versus distance law should hold within plus or minus 1 dB at all frequencies at which measurements are made. Ambient noise should not affect the measurements to an extent greater than plus or minus 1 dB.

Custodian:
Air Force - 85

Review activities:
Air Force - 99
DLA - ES

User activity:
Air Force -

Preparing activity:
Air Force - 85

(Project 5965-F123)

☆ U. S. GOVERNMENT PRINTING OFFICE: 1977-703-020/3011

Source: https://assist.dla.mil -- Downloaded: 2016-11-16T05:34Z
Check the source to verify that this is the current version before use.

FOLD

OFFICIAL BUSINESS
PENALTY FOR PRIVATE USE $300

POSTAGE AND FEES PAID
DEPARTMENT OF THE AIR FORCE
DoD-318

U.S. MAIL

AFLC/LOIE/Standardization
Wright-Patterson AFB OH 45433

FOLD

Source: https://assist.dla.mil -- Downloaded: 2016-11-16T05:34Z
Check the source to verify that this is the current version before use.

STANDARDIZATION DOCUMENT IMPROVEMENT PROPOSAL

OMB Approval No. 22-R255

INSTRUCTIONS: The purpose of this form is to solicit beneficial comments which will help achieve procurement of suitable products at reasonable cost and minimum delay, or will otherwise enhance use of the document. DoD contractors, government activities, or manufacturers/vendors who are prospective suppliers of the product are invited to submit comments to the government. Fold on lines on reverse side, staple in corner, and send to preparing activity. Comments submitted on this form do not constitute or imply authorization to waive any portion of the referenced document(s) or to amend contractual requirements. Attach any pertinent data which may be of use in improving this document. If there are additional papers, attach to form and place both in an envelope addressed to preparing activity.

DOCUMENT IDENTIFIER AND TITLE

MIL-E-25670A (USAF) Earphone Elements General Specification for

NAME OF ORGANIZATION AND ADDRESS

CONTRACT NUMBER FSC 5965

MATERIAL PROCURED UNDER A

☐ DIRECT GOVERNMENT CONTRACT ☐ SUBCONTRACT

1. HAS ANY PART OF THE DOCUMENT CREATED PROBLEMS OR REQUIRED INTERPRETATION IN PROCUREMENT USE?

A. GIVE PARAGRAPH NUMBER AND WORDING.

B. RECOMMENDATIONS FOR CORRECTING THE DEFICIENCIES

2. COMMENTS ON ANY DOCUMENT REQUIREMENT CONSIDERED TOO RIGID

3. IS THE DOCUMENT RESTRICTIVE?

☐ YES ☐ NO *(If "Yes", in what way?)*

4. REMARKS

SUBMITTED BY *(Printed or typed name and address - Optional)*

TELEPHONE NO.

DATE

DD FORM 1 JAN 72 1426

REPLACES EDITION OF 1 JAN 68 WHICH MAY BE USED

C16061

Source: https://assist.dla.mil -- Downloaded: 2016-11-16T05:34Z
Check the source to verify that this is the current version before use.