NOT MEASUREMENT SENSITIVE

MIL-STD-31000A
26 February 2013
SUPERSEDING
MIL-STD-31000
05 November 2009

DEPARTMENT OF DEFENSE

STANDARD PRACTICE

TECHNICAL DATA PACKAGES

This standard is approved for use by all Departments and Agencies of the Department of Defense.

1. SCOPE.

1.1 This standard provides requirements for the deliverable data products associated with a technical data package (TDP) and its related TDP data management products. A TDP contains elements, is described by a level and type, and may have associated metadata and supplementary technical data. TDP contains a sub-set of product data and product data is a sub-set of technical data. These relationships are shown in the hierarchical breakdown of data in Figure 1.

Comments, suggestions, or questions on this document should be addressed to: Commander, US Army ARDEC, ATTN: RDAR-QES-E, Picatinny Arsenal, New Jersey 07806-5000 or email to usarmy.picatinny.ardec.list.ardec-stdzn-branch@mail.mil. Since contact information can change, you may want to verify the currency of this address information using the ASSIST online database at https://assist.dla.mil.

AMSC 9341 AREA SESS

DISTRIBUTION STATEMENT A. Approved for public release; distribution is unlimited.

Source: https://assist.dla.mil -- Downloaded: 2017-01-09T06:14Z
Check the source to verify that this is the current version before use.

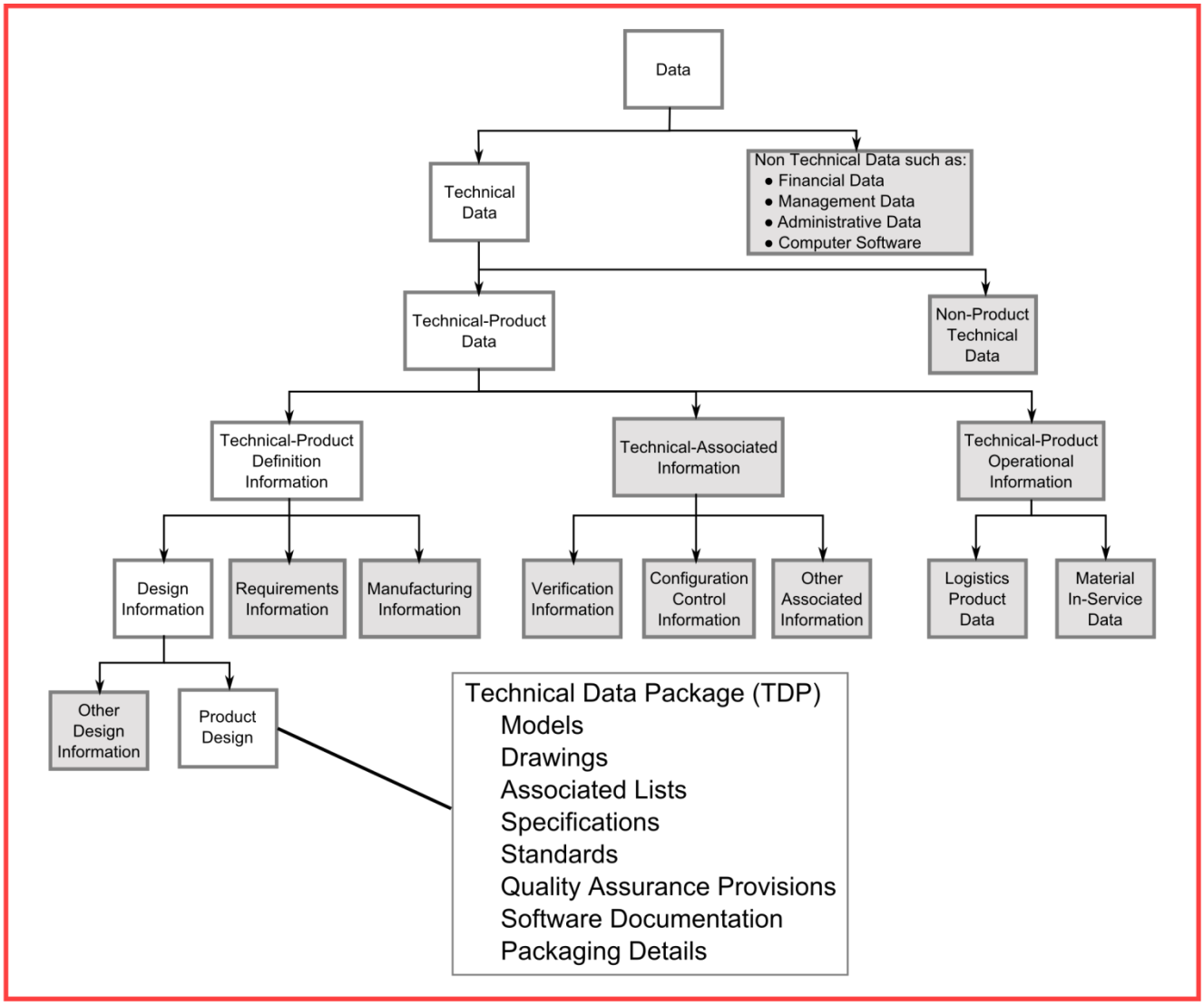

FIGURE 1. TDP relationships.

2. APPLICABLE DOCUMENTS.

2.1 General. The documents listed in this section are specified in sections 3, 4 and 5 of this standard. This section does not include documents listed in other sections or recommended for additional information or as examples.

2.2 Government documents.

2.2.1 Specifications, standards, and handbooks. The following specifications, standards, and handbooks form a part of this document to the extent specified herein. Unless otherwise specified, the issues of these documents are those cited in the solicitation or contract.

Source: https://assist.dla.mil -- Downloaded: 2017-01-09T06:14Z
Check the source to verify that this is the current version before use.

FEDERAL STANDARDS.

FED-STD-376 Preferred Metric Units for General Use by the Federal Government

DEPARTMENT OF DEFENSE STANDARDS.

MIL-STD-961 Defense and Program-unique Specifications Format and Content

MIL-STD-963 Data Item Descriptions (DID)

MIL-STD-2073-1 Standard Practice for Military Packaging

DOD-STD-2101 Classification of Characteristics

(Copies of these documents are available online at http://quicksearch.dla.mil or from the Standardization Document Order Desk, 700 Robbins Avenue, Building 4D, Philadelphia, PA 19111-5094.)

2.2.2 Other Government documents and publications. The following other Government documents and publications form a part of this document to the extent specified herein. Unless otherwise specified, the issues are those cited in the solicitation or contract.

DEPARTMENT OF DEFENSE MANUALS

DoD Manual 4100.39M	Federal Logistics Information System (FLIS) Procedures Manual
DoD Manual 5220.22-M	Department of Defense Industrial Security Manual for Safeguarding Classified Information.
DoD Directive 5230.24	Distribution Statements on Technical Documents
DoD Directive 5230.25	Withholding of Unclassified Technical Data From Public Disclosure
DoD 5010.12-M	Procedures for the Acquisition of Technical Data
DFARS Part 211	Defense Federal Acquisition Regulation Supplement for Describing Agency Needs
DFARS Part 227	Defense Federal Acquisition Regulation Supplement for Patents, Data and Copyrights
DFARS Part 252	Defense Federal Acquisition Regulation Supplement for Solicitations, Provisions and Contract Clauses
FAR 11.001	Federal Acquisition Regulation, Describing Agency Needs, Definitions
Federal Cataloging Handbook H4/H8	Commercial and Government Entity (CAGE) Codes

Source: https://assist.dla.mil -- Downloaded: 2017-01-09T06:14Z
Check the source to verify that this is the current version before use.

(Applications for copies of DoD Manual 5520.22-M and DoD Directive 5230.24 are available from the Defense Technical Information Center (DTIC), http://www.dtic.mil. The Federal Cataloging Handbook H4/H8 is available from the Commander, Defense Logistics Services Center, and Battle Creek, MI 49037-3084 at http://www.dlis.dla.mil/hseries.asp. Copies of DFARS documents are available online at http://www.acq.osd.mil/dpap/dars/dfarspgi/current/index.html. The federal documents can be found at http://www.dtic.mil/whs/directives/.)

FEDERAL PUBLICATION.

Federal Standardization Manual

(Copies of Federal Standardization Manual are available from the General Service Administration, Centralized Mailing List Service (7CAFL), P.O. Box 6477, Ft. Worth, TX 76115.)

2.3 Non-Government publications. The following documents form a part of this standard to the extent specified herein. Unless otherwise specified, the issues of the documents are those cited in the solicitation.

AMERICAN SOCIETY OF MECHANICAL ENGINEERS (ASME)

ASME Y14.1	Decimal Inch Drawing Sheet Size and Format
ASME Y14.24	Types and Applications of Engineering Drawings
ASME Y14.34	Associated Lists
ASME Y14.35	Revision of Engineering Drawings and Associated Documents
ASME Y14.41	Digital Product Definition Data Practices
ASME Y14.5	Dimensioning and Tolerancing
ASME Y14.100	Engineering Drawing Practices

(Copies of these documents are available from http://www.asme.org/ or ASME information Central Orders/Inquiries, P.O. Box 2300, Fairfield, NJ 07007-2300)

INSTITUTE OF ELECTRICAL AND ELECTRONICS ENGINEERS (IEEE)

ISO/IEC 12207	System and Software Engineering - Software Lifecycle Processes
ISO 32000-1	Document Management - Portable Document Format.

(Copies of this document are available from http://www.ieee.org/portal/site, or IEEE Service Center, 445 Hoes Lane, P.O. Box 1331, Piscataway, NJ 08854-1331.)

AMERICAN NATIONAL STANDARDS INSTITUTE

ISO 10303 Standard for the Exchange of Product model data (STEP)

(Copies of free and purchased parts of the standard are available at: http://www.ansi.org/.)

Source: https://assist.dla.mil -- Downloaded: 2017-01-09T06:14Z
Check the source to verify that this is the current version before use.

NATIONAL AEROSPACE STANDARDS

NAS 3500 Technical Data Package: Composition, Communication, and Application

(Copies of this document are available from the Aerospace Industries Association of America, inc. 1000 WILSON BLVD, ARLINGTON, VA 22209)

2.4 Order of precedence. Unless otherwise noted herein or in the contract, in the event of a conflict between the text of this document and the references cited herein, the text of this document takes precedence. Nothing in this document, however, supersedes applicable laws and regulations unless a specific exemption has been obtained.

3. DEFINITIONS.

3.1 For the purposes of this standard, the following definitions apply:

3.1.1 Associated list. A tabulation of engineering information pertaining to an item depicted on an engineering drawing or on a set of drawings. For example: parts list, data list, and index list. (See ASME Y14.24).

3.1.2 Commercial And Government Entity (CAGE) code. A five character code listed in Cataloging Handbook H4/H8, Commercial and Government Entity Code, which is assigned to commercial and Government activities that manufacture or develop items, or provide services or supplies for the Government. When used with a drawing number or part number, the CAGE Code designates the design activity from whose series the drawing or part number is assigned. The CAGE Code was previously called manufacturer's code, code identification number or Federal Supply Code for Manufacturers (FSCM).

3.1.3 Commercial drawings. Drawings prepared by a commercial design activity, in accordance with that activity's documentation standards and practices, to support the development and manufacture of a commercially developed product.

3.1.4 Commercial item. A product, material, code, component, subsystem, or system sold or traded to the general public in the course of normal business operations at prices based on established catalog or market prices. (FAR 11.001, definition of Commercial Product)

3.1.5 Company standard. A company document, which establishes engineering and technical limitations and applications for items, materials, processes, methods, designs and engineering practices unique to that company. (NOTE: Company standards are not considered to be non-Government standards.)

3.1.6 Competent manufacturer. A manufacturer that has demonstrated the capability to produce similar products at the same state of the art in the same or similar lines of technology.

3.1.7 Computer software. Computer programs, source code, source code listings, object code listings, design details, algorithms, processes, flow charts, formulae and related material that would enable the software to be reproduced, recreated, or recompiled. Computer software does not include computer data bases or computer software documentation. (DFARS Clause 252.227-7014)

3.1.8 Computer software documentation. Owner’s manuals, user’s manuals, installation instructions, operating instructions, and other similar items, regardless of storage medium, that explain the capabilities

Source: https://assist.dla.mil -- Downloaded: 2017-01-09T06:14Z
Check the source to verify that this is the current version before use.

of the computer software or provide instructions for using the software. (DFARS Clause 252.227-7014) ISO/IEC Standard 12207 uses the term “software life cycle data” to address software documentation.

3.1.9 Conceptual design data. Data such as drawings or 3-Dimensional (3D) digital models, which describe the engineering concepts on which a proposed technology or design approach is based.

3.1.10 Configuration Item (CI). A product or an aggregation of products that accomplishes an end- use function and is deemed important enough to require separate configuration management documentation and control.

3.1.11 Critical manufacturing process. A process is critical if it is the only known method that will result in the production of an acceptable item.

3.1.12 Data Item Description (DID). A completed document that defines the data required of a contractor. The document specifically defines the data content, format, and intended use. (MIL-STD-963)

3.1.13 Design Activity. An organization that has, or has had, responsibility for the design of an item.

3.1.13.1 Current Design Activity. The design activity currently responsible for the design of an item. This may be the original design activity or a design activity to which the design responsibility has been transferred.

3.1.13.2 Original Design Activity. The design activity originally responsible for the design and identification of an item whose drawing number and activity identification is shown in the title block of the drawings and associated documents.

3.1.14 Design maturity. The extent to which the final design or configuration of an item has been defined by the engineering process. For example, the design of a sheet metal cover having all holes in its mounting hole pattern fully dimensioned and toleranced for final size, location and orientation would be considered to be more mature than the design of a similar cover having its mounting hole pattern defined as “Drill at assembly".

3.1.15 Detailed design data. Technical data that describes the physical configuration and performance characteristics of an item or component in sufficient detail to ensure that an item or component produced in accordance with the technical data will be essentially identical to the original item or component.

3.1.16 Detail specification. A specification that specifies design requirements, such as materials to be used, how a requirement is to be achieved, or how an item is to be fabricated or constructed. A specification that contains both performance and detailed requirements is still considered a detail specification. Both defense specifications and program-unique specifications may be designated as a detail specification. (MIL-STD-961)

3.1.17 Developmental design data. Data which describe the physical and functional characteristics of a specific design approach to the extent necessary to permit the analytical

Source: https://assist.dla.mil -- Downloaded: 2017-01-09T06:14Z
Check the source to verify that this is the current version before use.

evaluation of the ability of the design approach to meet specified requirements and enable the development, manufacture and testing of prototype or experimental materiel.

3.1.18 Drawing. An engineering document or digital data file(s) that discloses (directly or by reference), by means of graphic or textual presentations, or by combinations of both, the physical or functional requirements of an item. (ASME Y14.100)

3.1.19 Drawing format. The arrangement and organization of information within a drawing is called drawing format. This includes such features as the size and arrangement of blocks, notes, lists, revision information, and the use of optional or supplemental blocks. (ASME Y14.1)

3.1.20 End product. An end product is an item, such as an individual part or assembly, in its final or completed state. (ASME Y14.24). An end product is also known as an end item.

3.1.21 Limited design disclosure model. A Computer Aided Design (CAD) 3-Dimensional model sufficiently defined to provide a visual understanding of the item, but which does not contain full design disclosure. Generally key interface characteristics and features such as weight and center of gravity will be sufficiently defined for the intended purpose. Sometimes referred to as a shrink-wrap, visualization, or cosmetic model.

3.1.22 Metadata. Metadata is generally defined to be data about data. For the purpose of this standard, Metadata is defined to be data about a design and its defining documents/models. Metadata is used by the Procuring Activity to store, manage, and provide access to TDP elements.

3.1.23 Non-Government standardization document. A standardization document developed by a private sector association, organization or technical society which plans, develops, establishes or coordinates standards, specifications, handbooks or related documents. Company standards are not considered as non-Government standardization documents.

3.1.24 Performance specification. A specification that states requirements in terms of the required results with criteria for verifying compliance, but without stating the methods for achieving the required results. A performance specification defines the functional requirements for the item, the environment in which it must operate, and interface and interchangeability characteristics. Both defense specifications and program-unique specifications may be designated as a performance specification. (MIL-STD-961)

3.1.25 Procuring Activity. The Government or private organization which establishes the requirements for an end item, service or set of data, and is responsible for the issuance of a contract or solicitation for these goods or services.

3.1.26 Product drawings. Engineering drawings which provide the design, engineering, manufacturing and quality support information necessary to permit a competent manufacturer to produce an interchangeable item which duplicates the physical and performance characteristics of the original design without additional design engineering or recourse to the design activity.

3.1.27 Product model data. A 3 dimensional (3D) geometric representation of a design that includes digital information required for full product definition.

Source: https://assist.dla.mil -- Downloaded: 2017-01-09T06:14Z
Check the source to verify that this is the current version before use.

3.1.28 Quality Assurance Provisions (QAP). Documented requirements, procedures and criteria necessary for demonstrating that products conform to design requirements.

3.1.29 Reference documents. Documents referred to in a TDP element, which contain information necessary to meet the information content requirements of that TDP element.

3.1.30 Special Inspection Equipment (SIE). Either single or multi-purpose integrated test units engineered, designed, fabricated or modified to perform special purpose testing of an item in the manufacturing process. It consists of items or assemblies of equipment that are interconnected and interdependent so as to become a new functional entity for inspection or testing purposes. SIE is also known as special test equipment.

3.1.31 Special Packaging Instruction (SPI). Instructions which document military packaging requirements for an item, as distinct from commercial packaging. These instructions cover methods of preservation to protect materiel against environmentally induced corrosion and deterioration, physical and mechanical damage, and other forms of degradation during storage, multiple handling and shipment of materiel in the defense transportation system SPI will be required and prepared in accordance with Appendix E of MIL-STD-2073-1 and as specified in the contract and Contract Data Requirements List (CDRL).

3.1.32 Special tooling (ST). Unique tooling which is mandatory to the manufacture of an acceptable item. It differs from tooling designed to increase manufacturing efficiency in that the use of the special tool imparts some characteristic to the item which is necessary for satisfactory performance and cannot be duplicated through other generally available manufacturing methods. Examples of ST would be jigs, dies, fixtures, molds, patterns and other equipment or manufacturing aids that absolutely must be used in order to produce a satisfactory item.

3.1.33 Specification. A document prepared to support acquisition that describes essential technical requirements for materiel and the criteria for determining whether those requirements are met. (MIL- STD-961)

3.1.34 Standardization document. A document, such as a specification, standard or handbook, developed for the purpose of standardizing items, materials, processes or procedures .

3.1.35 Supplementary Technical Data. Data related to or in support of a TDP, but not an inherent part of the TDP, which is provided as reference material or is explanatory in nature. For example, Supplementary Technical Data for a particular configuration item could include manufacturing instructions, simulations, work flow data, inspection equipment or procedures (which are not required as an inherent part of the TDP or TDP element), manufacturing machine code, design studies, analysis studies, test results, safety data sheets, etc.

3.1.36 Technical data. Recorded information, regardless of the form or method of the recording, of a scientific or technical nature (including computer software documentation). The term does not include computer software or data incidental to contract administration, such as financial or management information. (DFARS Clause 252.227-7013).

3.1.37 Technical Data Package (TDP). A technical description of an item adequate for supporting an acquisition, production, engineering, and logistics support (e.g. Engineering Data for Provisioning, Training, and Technical Manuals). The description defines the required design configuration or performance requirements, and procedures required to ensure adequacy of item

Source: https://assist.dla.mil -- Downloaded: 2017-01-09T06:14Z
Check the source to verify that this is the current version before use.

performance. It consists of applicable technical data such as models, drawings, associated lists, specifications, standards, performance requirements, QAP, software documentation and packaging details.

3.1.38 Technical data package document. A document that is part of a TDP element.

3.1.39 Technical data package element. A data product that is an actual component of the TDP. A TDP element provides all or part of the information necessary to define the item being documented by the TDP.

3.1.40 Technical data package data management product. A data product that is used to monitor and control the development and maintenance of the TDP. A TDP data management product contains information about the TDP rather than the item being documented.

3.1.41 Verification. All examinations, tests and inspections necessary to verify that an item meets the physical and functional requirements for which it was designed, to verify that a component, part or subassembly will perform satisfactorily in its intended application, or that an item conforms to specified requirements.

4. GENERAL REQUIREMENTS.

4.1 General. This section covers general requirements for Technical Data Packages. TDPs define the physical and functional characteristics of the accepted configuration of the item and its subordinate assemblies, subassemblies, and parts thereof. TDP levels, types, elements and TDP data management products shall be identified in accordance with this standard and applicable Data Item Descriptions (DID), as tailored and imposed through the TDP Option Selection Worksheet (Figure 2) or as defined in block 16 of the 1423, Contract Data Requirements Lists (CDRL) in contracts, purchase orders, and Military Interdepartmental Procurement Requests (MIPRs).In addition, provisions for the inclusion of minimum software version(s) required to view / open the TDP data set and label the file(s) / media accordingly for usability / accessibility shall be made. See Appendix A for guidance on selection of TDP elements and data management products.

4.2 TDP levels. TDP levels provide for a natural progression of a design from its inception to production. A particular TDP Level may be ordered to define a conceptual design, a developmental prototype or limited production design, or the highest type of engineering drawing/model required for quantity production of the item or system by the original developer or any other capable producer. TDPs shall consist of one of three Levels:

(1) Conceptual Level
(2) Developmental Level
(3) Production Level

4.3 TDP types. TDP Types describe the form and format of the technical data and shall consist of one or more of the following types:

4.3.1 Type 2D: 2-Dimensional (2D) Technical Data Package

4.3.2 Type 3D: 3-Dimensional (3D) Technical Data Package. Type 3D comes in one of the following type subsets:

Source: https://assist.dla.mil -- Downloaded: 2017-01-09T06:14Z
Check the source to verify that this is the current version before use.

a. 3D digital models only
b. 3D digital models with associated 2D drawings

4.4 TDP elements. TDP Elements describe the various component parts of the TDP.

a. Conceptual design drawings/models.

b. Developmental design drawings/models and associated lists. c. Production drawings/models and associated lists.

d. Commercial drawings/models and associated lists.

e. Special Inspection Equipment (SIE) drawings/models and associated lists. f. Special Tooling (ST) drawings/models and associated lists.

g. Specifications.

h. Software documentation.

i. Special Packaging Instruction (SPI) documents, drawings/models and associated lists. j. Quality assurance provisions (QAP).

4.5 TDP metadata and supplementary technical data. TDP metadata and supplementary technical data are deliverable data products used by the Procuring Activity to better acquire and support the end product defined by the TDP.

4.5.1 Metadata. When Metadata is required, it shall be delivered in accordance with the contract. Metadata consist of data from and data about TDP elements. The Metadata is used by the Procuring Activity to store, manage, manipulate, and provide access to TDP elements.

4.5.2 Supplementary technical data. When supplementary technical data is required, it shall be delivered in accordance with the contract.

4.6 TDP data management products. TDP Data Management Products are used by the Procuring Activity to control and manage the TDP creation process.

a. Source control drawing/model approval request.

b. Drawing/model number assignment report.

c. Proposed critical manufacturing process description.

4.7 Preparation and management.

4.7.1 Use of Government and non-Government standardization documents. TDP documents shall not be prepared or submitted that contain requirements already defined by existing standardization documents, if these standardization documents are available in the Acquisition Streamlining and Standardization Information System (ASSIST) (http://assist.daps.dla.mil) or from the independent societies governing the documents. Reference these documents instead. When the requirements in such standardization documents do not completely fulfill the requirements of an item, the standardization document shall be referenced, and the TDP element shall describe the variations necessary to fulfill the requirements.

Source: https://assist.dla.mil -- Downloaded: 2017-01-09T06:14Z
Check the source to verify that this is the current version before use.

4.7.1.1 Use of international and foreign standardization documents. International Standardization Organization / International Electrotechnical Commission (ISO/IEC) standardization documents adopted by the American National Standards Institute (ANSI) for use in the United States may be used to define requirements on TDP documents. Other national standardization documents of foreign countries shall not be used without the approval of the Procuring Activity. The use of international and foreign standardization documents in multinational programs subject to a memorandum of understanding between governments shall be governed by the terms of that agreement.

4.7.2 Reference documents. Documents referenced in a TDP element shall be furnished as part of that element, with the exception of those specified in 4.7.2.1. The following types of documents shall not be referenced in a TDP element: technical manuals, procedural manuals, maintenance manuals, company drafting manuals, management plans, uncontrolled documents or unreleased documents. However, when information essential to meeting the content of a TDP element (such as default surface texture values) is contained within such prohibited documents, that information shall be extracted from the reference document and included in the TDP.

4.7.2.1 ASSIST and non-Government standardization documents. Referenced documents available in ASSIST and non-Government standardization documents available from the issuing non-Government standards body, such as the American Society of Mechanical Engineers (ASME), do not need to be submitted as part of a TDP element.

4.7.3 Existing data. Use existing data when possible, provided it meets the following requirements:

a. The rights-in-data are consistent with the contract stipulations;

b. It is furnished at a cost equal to or less than creating new data;

c. It is identified by a CAGE Code, document number, title, and applicable contract number(s).

d. Any nonstandard symbols, drawing or documentation practices used are explained in the document or in a referenced document.

e. It contains a revision scheme which is compatible with the TDP element of which it will be submitted or can be modified to a compatible revision scheme.

4.7.3.1 Company standards. When the use of company standards is permitted by the contract or purchase order, company standards shall meet the requirements of 4.7.3 for existing data plus the following:

a. If the company standard defines a vendor item, the standard shall provide the same information as a vendor item control drawing (or specification control drawing) for the identification and procurement of an interchangeable item, and

b. All documents referenced in the standard shall also be supplied as required by 4.7.3.1.

4.7.4 Language and clarity. Unless otherwise specified, TDP documents shall be in the English language. Requirements, including explanations of non-standard practices or symbols,

Source: https://assist.dla.mil -- Downloaded: 2017-01-09T06:14Z
Check the source to verify that this is the current version before use.

shall be delineated clearly, concisely, and without ambiguity so that their correct interpretation is understandable by people knowledgeable in the subject matter presented.

4.8 Protecting classified information. TDPs or parts thereof, containing classified information shall be protected and marked in accordance with the Department of Defense Industrial Security Manual for Safeguarding Classified Information, DOD Manual 5220.22-M. When 3D TDP data is used, the 3D digital models shall display classification marking clearly visible when the 3D digital model is first opened.

4.9 Marking of technical data. TDPs or parts thereof, containing information subject to restrictions shall be protected in accordance with the appropriate guidance, contract, or agreement. Requirements for the restriction of access, availability, proprietary data, or use, of all TDP documents prepared by or for the DoD shall be marked by inclusion of the appropriate restriction statements. Examples of restriction statements include: the rights-in-data legends in accordance with DFARS Clauses 252.228-7013 and 7014; a distribution statement in accordance with DoD Directive 5230.24 and 5230.25; and export control notice. Care shall be exercised to match the appropriate distribution statement with the appropriate rights- in-data legend. When 3D TDP data is used, the 3D digital models shall display applicable restriction markings, legends, and statements clearly visible when the 3D digital model is opened or be provided in a location or manner which is clearly identifiable to the user.

4.10 Contract numbers and contractor identification. When required by the contract, purchase order or applicable data item description, TDP documents shall identify the contractor and contract number under which the document is prepared or delivered, or both. This requirement does not alter current DFARS requirements for identifying contractors and prime contract numbers in rights-in-data legends. Furthermore, contractor identifications and contract numbers in rights-in-data legends do not satisfy the requirements of this paragraph.

4.10.1 Application of contract numbers and contractor identification. When contract numbers and contract identifications are required on TDP documents, they shall meet the legibility and reproducibility requirements applicable to the document and be within the prescribed borders or margins of the document or be clearly identified within the electronic dataset or model.

4.11 Inspection of TDP. TDP documents and TDP data management products and the components thereof, including documents prepared by subcontractors, shall be inspected for the following:

a. Inclusion of all data, including sub-tier references, required to meet the information content requirements of the TDP element except those identified in 4.7.2.1.

b. Accuracy of the assignment and identification of security markings, restriction statements (for example distribution statements, export control notices, rights-in-data legends, and other special markings.)

c. Completeness and accuracy of the TDP data in describing the design of the item, its subassemblies, and component parts. The design to be described by the TDP documents is that configuration of the item the Procuring Activity has approved, tested, or accepted.

d. Electronic submittals shall open in the appropriate software without regeneration errors.

Source: https://assist.dla.mil -- Downloaded: 2017-01-09T06:14Z
Check the source to verify that this is the current version before use.

e. The use of National Aerospace Standard NAS 3500 “Technical Data Package: Composition, Communication, and Application” may be used to facilitate the acceptance and inspection of the TDP if required in the contract or purchase order.

4.12 Legibility and reproducibility. All data prepared or submitted shall meet the legibility and reproducibility requirements of the specification or standard controlling the media in which the data is to be delivered. As a minimum, all lines, symbols, letters, and numerals shall be readable.

4.13 CAGE codes. When CAGE Codes are to be applied to documents used in TDPs and TDP elements, only valid codes identified in the Federal Cataloging Handbook H4/H8 shall be used.

4.13.1 Type CAGE codes. Type “A" or “E” codes shall be used to identify design activities and vendors' part or identifying numbers and sources of supply except when industry marketing customs dictate otherwise. When the design activity or vendor of a specific item customarily licenses a distributor to perform the final steps of manufacture exclusively, the Type F code for the distributor may be used (DOD 4100.39, Vol 10 Table 90).

4.14 Metric documents. When the contract or purchase order specifies the use of the metric system (SI), TDP documents shall be identified as metric documents and conform to FED-STD-376.

4.15 Digital approval systems. TDP elements subject to approval may use signature or approval indicators. Approval indicators may be applied by a Digital Approval System. Digital Approval Systems shall satisfy the contracting activity requirements for uniqueness, verifiability, and sole control.

5. DETAILED REQUIREMEMENTS.

5.1 General. This section covers the requirements for technical data packages which may include 2D drawings, 2D drawings based on 3D digital models, or standalone 3D digital models and their formats.

5.2 Requirements for 3D TDPs. When 3-dimensional models are required for a production level TDP, the models shall be a complete, accurate, fully defined representation of the item and contain every feature the item being represented is intended to contain. All information necessary to adequately define the item shall be contained in, or associated with, the 3D digital model to include but not limited to dimensions, materials, tolerances, datums, drawing notes, revision data, etc.

5.2.1 2D drawings based on 3D digital models. Data on 2D drawings based on the 3D digital models shall be sourced to the maximum extent possible from the 3D digital model. There shall be no conflict in data between the 3D digital model and its associated 2D drawing.

5.2.2 Format of 3D TDP. Format of the 3D TDP based models shall be as directed by the contract or purchase order. In general, 3D digital models shall be in accordance with (ISO) 10303 Standard for the Exchange of Product model data (STEP), or in a native 3D CAD format capable of being exported to ISO
10303 STEP format.

Source: https://assist.dla.mil -- Downloaded: 2017-01-09T06:14Z
Check the source to verify that this is the current version before use.

5.2.3 Limited design disclosure models: When a 3D TDP is required and a subcomponent to the end item does not require complete design disclosure, (such as a commercial item, purchased item, etc.), a 3D digital model of the subcomponent shall be provided. The subcomponent's 3D digital model need not be fully defined, but shall be sufficient to provide adequate visualization, interface characteristics, accurate weight and center of gravity information as required (i.e. cosmetic model) (see para 3.1.21).

5.2.4 Model Organization Schema: When a 3D TDP is provided in accordance with 5.3.2.2, then all annotations and views contained within the model shall be done in accordance with a Model Organization Schema that is compliant with or can be mapped to the one defined in Appendix B of this document. If a different Model Organization Schema is used, a document defining the mapping of the elements of that schema to the one referenced in Appendix B should be required.

5.3 TDP levels, types, elements and associated data. TDPs shall consist of one or more of the following TDP levels, types and elements as specified in the contract or purchase order and TDP Option Selection Worksheet.

5.3.1 TDP Levels.

5.3.1.1 Conceptual level. - A conceptual design TDP shall consist of those TDP elements necessary to define design concepts in graphic form, and include appropriate textual information required for analysis and evaluation of those concepts. The data will generally consist of simple sketches/models, artist renderings and/or basic textual data. The data may consist of the system performance specification (see 5.3.3.7) and can be supported by Conceptual design drawings and/or models (see 5.3.3.1) as specified by the contract.

5.3.1.2 Developmental level. - A developmental prototype TDP shall consist of those TDP elements necessary to provide sufficient data to support the analysis of a specific design approach, the fabrication of prototype materiel for test or experimentation, and limited production by the original design organization or with assistance from the original design organization. The data may consist of the unique item specifications (see 5.3.3.7). for all system component Configuration Items (CIs) and can be supported by developmental design drawings and/or models along with any required associated lists (see 5.3.3.2) as specified by the contract.

5.3.1.3 Production level. - A production level TDP shall consist of those TDP elements necessary to provide the design, engineering, manufacturing, inspection, packaging and quality assurance provisions information necessary to enable the procurement or manufacture of an item. The product shall be defined to the extent necessary for a competent manufacturer to produce an item, which duplicates the physical, interface, and functional characteristics of the original product, without additional design engineering effort or recourse to the current design activity. Production data shall reflect the approved, tested, and accepted configuration of the defined delivered item. The data may consist of product drawings and/or models along with all required associated lists (see 5.3.3.3); SIE drawings and/or models along with all required associated lists (see 5.3.3.5); ST drawings and/or models along with all required associated lists (see 5.3.3.6); specifications (see 5.3.3.7); software documentation (see 5.3.3.8); SPI drawings and/or models along with all required associated lists (see 5.3.3.9); and QAP(see 5.3.3.10) as specified by the contract.

5.3.2 TDP types. TDP Type describes the form and format of the data as imposed by the

Source: https://assist.dla.mil -- Downloaded: 2017-01-09T06:14Z
Check the source to verify that this is the current version before use.

applicable data item descriptions, TDP Option Selection Worksheet (Figure 2) and Contract Data Requirements Lists (CDRL) in the contract, purchase orders, and Military Interdepartmental Procurement Requests (MIPRs).

5.3.2.1 Type 2D: 2-Dimensional Technical Data Package (2D TDP) – A 2D TDP is based on 2 dimensional engineering drawings. 2D engineering drawings can be manually generated, or generated in a digital form.

5.3.2.2 Type 3D: 3-Dimensional Technical Data Package (3D TDP)- A 3D TDP is based on computer based 3–dimensional models that are capable of generating, when required, 2D engineering drawings. Type 3D TDPs shall consist of one of the following type subsets:

a. 3D digital models only
b. 3D digital models with associated 2D drawings

5.3.3 TDP elements. TDP Elements describes the various component parts of the TDP and are defined as follows:

5.3.3.1 Conceptual design drawings/models. Conceptual design data shall be prepared to define design concepts in graphic form, and include appropriate textual information required for analysis and evaluation of those concepts. If 3D CAD Models form the design definition without 2D drawings they shall include the following information:

a) A geometric representation defining the physical shape of the product.

b) Annotated dimensions defining the overall envelope or boundary size of the component.

c) Annotated note that defines all default tolerances or appropriate global Geometric Dimensioning and Tolerancing (GD&T) as it applies to the product at the design level.

d) All material information that is known at the level shall be called out in either a general annotated note and/or in the system parameters of the model.

e) Finish requirements should be called out in a general annotated note.

f) Information typically referred to as “title block” information shall be noted in the product definition. This information should include the following as a minimum; Part Number, Contract Number, Design Authority CAGE Code, Drawn By, Approved By, ITAR statements, Distribution statements, Classification requirements, Revision Level and Revision Date.

5.3.3.2 Developmental design drawings/models and associated lists. Developmental design drawings/models and associated lists shall be prepared to provide sufficient data to support the analysis of a specific design approach and the fabrication of prototype material for test or experimentation. Data and lists required to present a design approach may vary from simple sketches to complex drawings, or may be a combination of both. If 3D CAD Models are required at the Developmental Level they shall include the following information:

Source: https://assist.dla.mil -- Downloaded: 2017-01-09T06:14Z
Check the source to verify that this is the current version before use.

Elements “a” through “f” of section 5.3.3.1

a) All nonstandard, key and critical items that are non-graphical in nature shall be called out in a product definition.

b) All nonstandard, key and critical dimensions shall be called out in the product definition.

5.3.3.3 Product drawings/models and associated lists. Product drawings/models and associated lists shall be prepared to provide the design, engineering, and manufacturing information necessary to enable the procurement or manufacture of an item essentially identical to the original item. The product shall be defined to the extent necessary for a competent manufacturer to produce an item, which duplicates the physical, interface, and functional characteristics of the original product, without additional design engineering effort or recourse to the current design activity. Product data shall reflect the approved, tested and accepted configuration of the defined delivered item. This together with other TDP elements forms a Production Level TDP which will be used to support the product throughout its lifecycle. If 3D CAD Models are required they shall include the following information:

Elements “a” through “f” of section 5.3.3.1

a) All non-graphical requirements that are needed to unambiguously define the part shall be called out in the product definition.

b) All dimensions needed to unambiguously define the product shall be called out in the product definition.

5.3.3.4 Commercial drawings/models and associated lists. Commercial drawings/models and associated lists provide engineering and technical information in support of end products, or designated portions thereof, which are commercially developed items, commercial off-the-shelf items (COTS), or items not developed at Government expense. These data and lists shall be in accordance with the commercial design documentation practices of the contractor or supplier of the item.

5.3.3.4.1 Design disclosure. The degree of design disclosure on commercial drawings/models and associated lists, whether full design disclosure or limited design disclosure, shall be as stated in the contract or purchase order.

5.3.3.4.2 Data rights. Rights in data for commercial drawings/models and associated list shall be as stated in the contract or purchase order.

5.3.3.5 Special Inspection Equipment (SIE) drawings/models and associated lists. SIE drawings/models and associated lists shall be prepared to provide the data required to manufacture or assemble SIE, which is mandatory to successfully produce the item. The SIE shall be defined in detail to the extent necessary for a competent manufacturer to manufacture or assemble SIE, which duplicates the performance characteristics of the original SIE. SIE is also known as special test equipment.

5.3.3.6 Special Tooling (ST) drawings/models and associated lists. ST drawings/models and associated lists shall be prepared to provide the data required to manufacture special tooling which is mandatory to successfully produce the item. The ST shall be defined in detail to the

Source: https://assist.dla.mil -- Downloaded: 2017-01-09T06:14Z
Check the source to verify that this is the current version before use.

extent necessary for a competent manufacturer to produce tooling which duplicates the performance characteristics of the original tooling.

5.3.3.7 Specifications. Specifications shall be prepared as performance specifications or detail specifications as required in the contract or purchase order.

5.3.3.7.1 Defense specifications. Defense specifications shall be prepared in accordance with MIL- STD-961 as coordinated, limited or interim specifications.

5.3.3.7.2 Program-unique specifications. Program-unique specifications shall be prepared in accordance with MIL-STD-961 as item, material, process, software, item or system specifications.

5.3.3.7.3 Commercial Item Descriptions (CIDs). CIDs shall be prepared in accordance with the Federal Standardization Manual to describe, by functional, performance, or essential physical requirements, available commercial products or services.

5.3.3.8 Software documentation. Software / Firmware documentation

a) Documentation for software CIs defined in the TDP shall be prepared in accordance with ASME Y14.24.

b) Documentation for firmware imbedded in the hardware defined in the TDP or SIE related to the hardware shall be prepared in accordance with ASME Y14.24.

5.3.3.9 Special Packaging Instructions (SPI) drawings/models and associated lists. Packaging requirements and data shall be as specified in the contract or order. Special packaging instructions, drawings/models and associated lists shall be prepared to provide the data required to manufacture special packaging which is mandatory to successfully protect, store and transport the item. The special packaging shall be defined in detail to the extent necessary for a competent manufacturer to produce packaging which duplicates the performance characteristics of the original packaging.

5.3.3.10 Quality Assurance Provisions (QAP). Quality assurance provisions shall be prepared to identify any special test, inspections, measurements or certifications required to ensure the item being defined meets is intended performance. Form and format of the quality assurance provision shall be as required in the contract or purchase order.

5.4 TDP data management products. When specified in the contract or purchase order, the following data management products related to the management and control of TDPs shall be prepared.

5.4.1 Source Control Drawing approval request. Source control drawing approval request shall be prepared and submitted to the Procuring Activity specified in the contract or purchase order as having approval authority. Each potential source control item shall be approved by the Procuring Activity prior to inclusion of the source control drawing in the TDP.

5.4.2 Drawing/Model number assignment report. A drawing/Model number assignment report shall be prepared to identify and describe the use of Government drawing/Model numbers by the contractor.

Source: https://assist.dla.mil -- Downloaded: 2017-01-09T06:14Z
Check the source to verify that this is the current version before use.

5.4.3 Proposed critical manufacturing process description. Proposed critical manufacturing process descriptions shall be prepared to describe manufacturing processes, which are critical to meeting the design requirements of the item. The process shall be approved as critical by the Procuring Activity cited in the contract or purchase order as having approval authority before it is designated as mandatory in TDP documents.

Source: https://assist.dla.mil -- Downloaded: 2017-01-09T06:14Z
Check the source to verify that this is the current version before use.

TDP OPTION SELECTION WORKSHEET

SYSTEM: DATE PREPARED:

A. CONTRACT NO.	B. EXHIBIT / ATTACHMENT NO.	C. CLIN	D. CDRL DATA ITEM NO(s)

1. TDP LIFECYCLE LEVEL (CHOOSE ONLY ONE PER WORKSHEET) Note: The level selected must coincide with the requirements of the elements selected in Block 5.

A. ☐ CONCEPTUAL LEVEL ☐ DEVELOPMENTAL LEVEL ☐ PRODUCTION LEVEL	B. REMARKS:

2. DELIVERABLE DATA PRODUCTS (X ALL THAT APPLY AND COMPLETE AS APPLICABLE)

TYPE	FORMAT
A. ☐ 2D DRAWINGS	☐ NATIVE CAD ☐ ISO 32000 PDF ☐ HARD COPY ☐ OTHER FORMAT (SPECIFY) _____
B. 3D MODELS: ☐ 3D Digital MODELS ONLY ☐ 3D Digital MODELS W/ ASSOCIATED 2D DRAWINGS	☐ NATIVE CAD (Specify level of annotation) _____ ☐ MODEL ORGANIZATION SCHEMA (Specify Appendix B or other) _____ ☐ NEUTRAL FORMAT (SPECIFY, e.g., ISO 10303 APxxx) _____ ☐ OTHER FORMAT (SPECIFY, E.G.,3D PDF, JT)_____
C. ☐ METADATA (Specify in Section 9)	☐ ASCII TEXT- PIPE DELIMITED ☐ ISO 10303 (SPECIFY, e.g., APxxx & DEX) _____ ☐ JEDMICS (DLF) ☐ OTHER FORMAT (SPECIFY) _____
D. ☐ ASSOCIATED LISTS (See Sect 7)	☐ NATIVE FORMAT ☐ ISO 32000 PDF ☐ HARDCOPY ☐ OTHER FORMAT (SPECIFY) _____
E. SUPPLEMENTAL ☐ TECHNICAL DATA (Specify in Section 9)	NATIVE _____ NEUTRAL (SPECIFY e.g., STEP AP238, 240, DEX, Other)_____ OTHER (SPECIFY e.g., PDF) _____

3. CAGE CODE & DOCUMENT NUMBERS	A. ☐ CONTRACTOR CAGE & DOCUMENT NUMBERS ☐ GOVERNMENT CAGE (COMPLETE 3B, 3C and 3D)	
B. USE CAGE CODE:	C. USE DOCUMENT NUMBERS:	D. TO BE ASSIGNED BY:

4. DRAWING FORMATS (X ONE AND COMPLETE AS APPLICABLE)

☐ CONTRACTOR FORMAT ☐ GOVERNMENT FORMAT

REMARKS: _____

5. TDP ELEMENTS AND ASSOCIATED DATA REQUIRED (X ALL THAT APPLY)

- ☐ CONCEPTUAL DESIGN DRAWINGS / MODELS
- ☐ DEVELOPMENTAL DESIGN DRAWINGS / MODELS AND ASSOCIATED LISTS
- ☐ PRODUCT DRAWINGS / MODELS AND ASSOCIATED LISTS
- ☐ SPECIAL INSPECTION EQUIPMENT (SIE) DRAWINGS, MODELS AND ASSOCIATED LISTS
- ☐ SPECIAL TOOLING (ST) DRAWINGS, MODELS AND ASSOCIATED LISTS
- ☐ SPECIAL PACKAGING INSTRUCTIONS (SPI) DRAWINGS, MODELS AND ASSOCIATED LISTS
- ☐ SPECIFICATIONS AND/OR STANDARDS (SPECIFY) _____
- ☐ SOFTWARE DOCUMENTATION (SPECIFY) _____
- ☐ QUALITY ASSURANCE PROVISIONS (QAP) (SPECIFY) _____
- ☐ METADATA (SPECIFY) _____
- ☐ SUPPLEMENTARY TECHNICAL DATA (SPECIFY) _____

FIGURE 2: TDP Option Selection Worksheet

Source: https://assist.dla.mil -- Downloaded: 2017-01-09T06:14Z
Check the source to verify that this is the current version before use.

6. TDP DATA MANAGEMENT PRODUCTS

- ☐ SOURCE CONTROL DRAWING (SOCD) APPROVAL REQUEST
- ☐ DRAWING NUMBER ASSIGNMENT REPORT
- ☐ PROPOSED CRITICAL MANUFACTURING PROCESS DESCRIPTION

7. ASSOCIATED LISTS (X AND COMPLETE AS APPLICABLE)

A. PARTS LISTS (X ONE)	☐ (1) INTEGRAL	☐ (2) SEPARATE	☐ (3) CONTRACTOR SELECT
B. DATA LISTS	☐ REQUIRED (Specify Levels of Assy)_____		
C. INDEX LISTS	☐ REQUIRED (Specify Levels of Assy)_____		
D. WIRING LISTS	☐ REQUIRED (Specify Levels of Assy)_____		
E. APPLICATION LISTS	☐ (1) INTEGRAL	☐ (2) SEPARATE	☐ (3) CONTRACTOR SELECT
F. OTHER	☐ REQUIRED (Specify)_____		

8. APPLICABILITY OF STANDARDS. THE FOLLOWING STANDARDS APPLY: (X AS APPLICABLE)

☐ ASME Y14.100 ENGINEERING DRAWING PRACTICES WITH APPENDICES: ☐ B ☐ C ☐ D ☐ E	☐ ASME Y14.24 TYPES AND APPLICATIONS OF ENGINEERING DRAWINGS ☐ ASME Y14.34 ASSOCIATED LIST ☐ ASME Y14.35M REVISION OF ENGINEERING DRAWINGS AND ASSOCIATED LIST ☐ ASME Y14.41 DIGITAL PRODUCT DEFINITION DATA PRACTICES ☐ ASME Y14.5 DIMENSIONING AND TOLERANCING	☐ OTHER STANDARDS APPLY AS DESCRIBED: COMPANY STANDARDS PERMITTED ☐ YES ☐ NO

9. OTHER TAILORING (ATTACH ADDITIONAL SHEETS AS NECESSARY)

FIGURE 2: TDP Option Selection Worksheet (cont.)

Source: https://assist.dla.mil -- Downloaded: 2017-01-09T06:14Z
Check the source to verify that this is the current version before use.

TDP OPTION SELECTION WORKSHEET
COMMERCIAL DRAWINGS/MODELS AND ASSOCIATED LISTS

SYSTEM: DATE PREPARED:

A. CONTRACT NO.	B. EXHIBIT / ATTACHMENT NO.	C. CLIN	D. CDRL DATA ITEM NO(s)

1. DELIVERABLE DATA PRODUCTS (X ALL THAT APPLY AND COMPLETE AS APPLICABLE)

TYPE	FORMAT
A. ☐ 2D DRAWINGS	☐ NATIVE CAD ☐ ISO 32000 PDF ☐ HARDCOPY ☐ OTHER FORMAT (SPECIFY) _____
B. 3D DIGITAL MODELS: ☐ 3D DIGITAL MODELS ONLY ☐ 3D DIGITAL MODELS W/ ASSOCIATED 2D DRAWINGS	☐ NATIVE CAD ☐ NEUTRAL FORMAT (SPECIFY, e.g., ISO10303, APxxx) _____ ☐ OTHER FORMAT (SPECIFY) _____
C. ☐ METADATA (Specify in Section 2)	☐ ASCII TEXT- PIPE DELIMITED ☐ JEDMICS (DLF) ☐ ISO 10303 STEP (SPECIFY, e.g, APxxx, DEX)_____ ☐ OTHER FORMAT (SPECIFY) _____
D. ☐ ASSOCIATED LISTS	☐ NATIVE FORMAT ☐ ISO 32000 PDF ☐ HARDCOPY ☐ OTHER FORMAT (SPECIFY) _____

2. OTHER TAILORING (ATTACH ADDITIONAL SHEETS AS NECESSARY)

FIGURE 3: TDP Option Selection Worksheet – Commercial Drawing/Models and Associated Lists

Source: https://assist.dla.mil -- Downloaded: 2017-01-09T06:14Z
Check the source to verify that this is the current version before use.

6. NOTES.

(This section contains information of a general or explanatory nature, which may be helpful, but is not mandatory.)

6.1 Intended use. TDP elements procurable under this standard are intended for use in a wide variety of functions in the life cycle of materiel developed for the Department of Defense. Some examples of these functions are design evaluation, design development, provisioning, procurement (competitive and non-competitive), manufacture, transportation, installation, maintenance, modification, and engineering and logistics support. TDP data management products are intended for use by the Procuring Activity in ensuring that TDP elements acquired under this standard conform to contractual requirements.

6.2 Acquisition requirements. Acquisition documents should specify the following:

a. Title, number, and date of this standard.

b. If required, the specific issue of individual documents referenced. (See 2.0)

c. The TDP level, deliverable data products and elements to be supplied. (See 4.2, 4.3 and 4.4)

d. The TDP data management products to be supplied. (See 4.5 and Appendix A)

e. Whether or not company standards are permitted. (See 4.7.3.1)

f. Completed TDP Option Selection Worksheet(s). The TDP Option Selection Worksheet(s) are used to specify options and tailoring for models, drawings and specifications being acquired as TDP elements.

g. Whether or not subcontractor identifications and subcontract numbers are required in accordance with 4.10; and if so, the location and method of application.

6.3 Data requirements. This standard has been assigned an Acquisition Management Systems Control number authorizing it as the source document for the following DIDs. When it is necessary to obtain the data, the applicable DIDs should be listed on the Contract Data Requirements List (DD Form 1423).

Source: https://assist.dla.mil -- Downloaded: 2017-01-09T06:14Z
Check the source to verify that this is the current version before use.

TABLE 1. Data requirements.

DID Number	DID Title	Suggested Tailoring	Reference Paragraph
DI-SESS-81001E	Conceptual Design Drawings/Models	Appendix A	A.2.4.1
DI-SESS-81002F	Developmental Design Drawings/Models and Associated Lists	Appendix A	A.2.4.2
DI-SESS-81000E	Product Drawings/Models and Associated Lists	Appendix A	A.2.4.3
DI-SESS-81003E	Commercial Drawings/Models and Associated Lists	Appendix A	A.2.4.4
DI-SESS-81004E	Special Inspection Equipment Drawings/Models and Associated Lists	Appendix A	A.2.4.5
DI-SESS-81008E	Special Tooling Drawings/Models and Associated Lists	Appendix A	A.2.4.6
DI-SESS-81010E	Source Control Drawing Approval Request	Appendix A	A.2.5.1.b
DI-SESS-81011E	Drawing/Model Number Assignment Report	Appendix A	A.2.5.2.b
DI-SESS-81012E	Proposed Critical Manufacturing Process Description	Appendix A	A.2.5.3.b
DI-CMAN 80776A	Technical Data Package	Appendix A	A.2.4.3

The above DID's were current as of the date of this standard. The ASSIST database should be researched at http://quicksearch.dla.mil to ensure that only current and approved DID's are cited on DD Form 1423.

6.3.1 DIDs for specifications. Applicable DIDs and tailoring instructions for acquiring performance, detailed, and program-unique specifications are specified in MIL-STD-961.

6.3.2 DIDs for software documentation. Applicable “Information items” (a commercial equivalent to a DID) for acquiring software documentation (also known as software lifecycle data) are specified in ISO/IEC 12207.

6.3.3 DIDs for packaging data. Applicable DIDs and tailoring instructions for acquiring packaging data are specified in MIL-STD-2073-1.

6.3.4 DID for Metadata and supplementary technical data. Since the specific data content and format for Metadata and supplementary technical data are site or program specific, the Procuring Activity will need to specify what they require. See MIL-STD-963 for instructions concerning the preparation of DIDs.

6.4 Supersession history. MIL-STD-31000, dated 5 November 2009 replaced MIL-DTL-31000C, dated 9 July 2004; MIL-T-47500(MI) dated 24 March 1989; MIL-T-47500/1(MI) dated 24 March 1989; MIL-T-47500/2(MI) dated 24 March 1989; MIL-T-47500/3(MI) dated 24 March 1989; MIL-T-47500/4(MI) dated 24 March 1989; MIL-T-47500/5(MI) dated 24 March 1989; and MIL-T-47500/6(MI) dated 24 March 1989.

6.5 Basic engineering drawing practices. Basic engineering drawing practices for commercial applications are invoked though reference to ASME Y14.100. For other than strictly commercial applications (for example DOD design activities) reference should be made to ASME Y14.100, with or without Appendices. ASME Y14.100 will require extensive tailoring to

Source: https://assist.dla.mil -- Downloaded: 2017-01-09T06:14Z
Check the source to verify that this is the current version before use.

exclude unnecessary requirements. Such tailoring should carefully consider the contractual objectives and the logistic intent. A tailoring guide, Appendix A, is included in ASME Y14.100 to facilitate the tailoring process.

6.5.1 Interdependent standards. ASME Y14.100 is not a stand-alone document for the purpose of addressing basic engineering drawing practices. For the purpose of addressing basic engineering drawing practices, ASME Y14.100, ASME Y14.24, ASME Y14.34, ASME Y14.35 and ASME Y14.41 should be regarded as a closely interdependent set of ASME standards.

6.6 Digital product definition data. ISO 10303 provides content and format for the exchange of digital TDPs and 3-dimension product model data in a neutral file format. The Procuring Activity should specify the required STEP Application Protocol(s) (AP) and/or a specific native CAD format as a minimum in the TDP Option Selection Worksheet based on the intended uses. Product Data Specification (Air Force drawing 9579776), is available for use in defining the appropriate digital data delivery requirements for the Native, Neutral and Viewable formats as well as three options for the METADATA delivery. This document also includes a description of the requirements for a Bill of Material (BOM). This Product Data Specification (Air Force Drawing 9579776) is accessible via JEDMICS and the most current revision can be located using the Military Engineering Data Asset Locator System (MEDALS).

6.7 Commercial drawings. The acquisition of commercial drawings almost always involves rights in data and intellectual property issues. These issues should be clearly defined in the contract or purchase order in accordance with DFARS Parts 211 and 227. This standard and its related data item descriptions will not be used to circumvent the DFARS requirements.

6.8 Special Inspection Equipment (SIE). To be considered mandatory to the manufacture of an item, the SIE should be the only known inspection equipment that can be used to test or inspect parameters that cannot be inspected effectively with commercially available equipment. (See 5.3.3.5)

6.9 Contractors specifications. A contractor's specifications for items such as materials or processes are considered company standards. See 3.1.5 and 5.3.3.7.

6.10 Validation of 3D Model Data: In order to assure the highest quality of data and the ability to reuse the data throughout all of the lifecycle of the weapon system, it is highly recommended that a validation process be put in place. This process should validate the entire model including items like; Geomitry, Product Manufacturing Information (PMI) and Meta Data. Appendix C outlines the guidance for such a process along with guidance on how to establish it.

6. 11 Subject term (keyword) listing.

Drawings and associated lists
Drawing number assignment report
Packaging
Product model
Proposed critical manufacturing process description
(SIE) descriptive documentation
Source control drawing approval request
Special tooling (ST) drawings

Source: https://assist.dla.mil -- Downloaded: 2017-01-09T06:14Z
Check the source to verify that this is the current version before use.

Specifications
Test requirements document
2D TDP
3D TDP
TDP elements
TDP level

6.12 Changes from previous issue. Marginal notations are not used in this revision to identify changes with respect to the previous issue due to the extent of the changes.

Source: https://assist.dla.mil -- Downloaded: 2017-01-09T06:14Z
Check the source to verify that this is the current version before use.

SELECTION AND ORDERING GUIDANCE

A.1 SCOPE.

A.1.1 Scope. This Appendix provides guidance for Procuring Activity personnel on the acquisition of the various types of technical data and the completion of the TDP Option Selection Worksheet, Figure 2, and/or TDP Option Selection Worksheet Commercial Drawings/Models and Associated Lists, Figure 3, of this standard. This appendix is not a mandatory part of this standard, however the TDP Option Selection worksheet is mandatory if it forms part of a contract or purchase order.

A.2 REQUIREMENTS.

A.2.1 General. Procuring Activities acquiring technical data are required to carefully review their respective needs for technical data and TDP data management products.

A.2.1.1 Tailoring. Procuring Activities shall evaluate the cost of data items in relation to their value in the design, production, management, reprocurement, maintenance, logistics support and use of the product. (The DD Form 1423, Block 18, Estimated Total Price, is the means to establish the cost of each data item.) In addition, activities acquiring data shall tailor the requirements for each data product to ensure that the essential data necessary to meet the acquisition programs' long term needs is acquired. Tailoring decisions will take into consideration the commercial or military nature of the materiel being procured and its developmental status. Procuring Activities should carefully assess tailoring of data to ensure the necessary level of form, fit and function or detail data is obtained to maximize availability of competitive acquisition and product support alternatives.

A.2.2. Selecting and ordering TDP levels . The determination as to the level of TDP should be made based on the nature of the item being procured, the lifecycle phase of the product, and the level of data required by the Procuring Activity.

A.2.3. Selecting and ordering Deliverable Data Products . The determination as to deliverable data products, including 2D drawings, 3D digital models, metadata, associated lists and supplemental technical data should be made based on the nature of the item being procured, the acquisition and support strategies of the item, and the level of design data required to support the product over the lifecycle.

A.2.3.1 Two-dimensional (2D) drawings and/or 3D digital models

a. Selection. Three-dimensional based TDPs are usually preferred, especially when the item is mechanical in nature, is subject to a significant number of interfaces with other systems, or in which future design upgrades and changes are likely. 2D based drawings, which are derived from 3D solid models, may be required when the TDP is used during the production phase of the lifecycle.

b. Ordering. The type and format of drawings/models (2D and/or 3D) required by the Procuring activity for delivery should be identified in the Statement of Work and with the specific formats clearly delineated in the TDP Option Selection Worksheet as part of the CDRL.

Source: https://assist.dla.mil -- Downloaded: 2017-01-09T06:14Z
Check the source to verify that this is the current version before use.

A.2.3.2 Metadata

a. Selection. Metadata is ordered by the Procuring Activity to store, manage, manipulate and provide access to TDP elements. The metadata required is the data needed by the information management system used by the Procuring Activity to perform these functions. The metadata needs to be delivered in a format that the information management system can process. The Procuring Activity needs to specify the data and its format as part of the selection.

b. Ordering. In the Statement of Work, data delivery as part of the CDRL and associated documents require the generation of metadata in accordance with the TDP Option Selection Worksheet. Identify the content and format requirements of the metadata on the worksheet.

A.2.3.3 Associated lists.

a. Selection. Associated lists are data that is part of the TDP and that the Procuring Activity has determined necessary and beneficial in supporting the product throughout its life cycle. The Procuring Activity should specify the associated lists' format(s) required, of the lists identified in Section 7 of the TDP Option Selection Worksheet, as part of the selection process.

b. Ordering. In the Statement of Work, require the activity that generates the required data and require the data to be formatted as stated on the TDP Option Selection Work Sheet.

A.2.3.4 Supplementary technical data.

a. Selection. Supplementary technical data is data that is in addition to the TDP and that the Procuring Activity has determined to be of benefit to supporting the product throughout its life cycle. The Procuring Activity needs to specify the data required and its format as part of the selection process.

b. Ordering. In the Statement of Work, require the activity that generates the required data and require the data to be formatted as stated on the TDP Option Selection Work Sheet.

A.2.4 Selecting and ordering TDP elements. When ordering TDP elements and associated data below, require the generation of a TDP containing the required elements and associated data in the Scope of Work. Cite the appropriate DID and reference a TDP Option Selection Work Sheet in the CDRL. Complete a TDP Option Selection Work Sheet (including tailoring) and include it in the solicitation, contract or purchase order.

A.2.4.1 Conceptual design drawings/models. Conceptual design drawings/models (DI-SESS-81001E) are used when there is a need to verify preliminary design and engineering and confirm that the technology is feasible and that the design concept has the potential to be useful in meeting a specific requirement. Conceptual design drawings/models should only be ordered under contracts containing concept exploration and research tasks.

A.2.4.2 Developmental design drawings/models and associated lists. Developmental design drawing/models and associated lists (DI-SESS-81002F) are used to describe a specific design approach. They provide the information to produce materiel for test or experimentation, and for the analytical evaluation of the inherent ability of the design approach to attain the required performance. Developmental design data should only be ordered under contracts when a limited set of data is sufficient for the intended purpose.

A.2.4.3 Product drawings/models and associated lists. Product drawings/models and

Source: https://assist.dla.mil -- Downloaded: 2017-01-09T06:14Z
Check the source to verify that this is the current version before use.

associated lists (DI-SESS-81000E or DI-CMAN-80776A) should be selected when there is a current or future need for the Government to procure or manufacture the equipment, components, or spares and repair parts from either the original manufacturer or an alternate source. Product drawings/models should be ordered only under contracts containing engineering and manufacturing development or production tasks and are part of a Production Level TDP. When product drawings/models are ordered for large, complex items such as major weapons systems, tailoring decisions should include consideration of ordering commercial drawings/models for selected commercial items used as subassemblies. It should also be noted that where there are fully justified DoD peculiar drawing practices requirements, such as the DoD system for Numbering, Coding and Identification, ASME Y14.100 and applicable appendices should be invoked**.** The use of the appendices to ASME Y14.100 will usually be associated with product drawings indicating a DoD activity as design activity and an end item requiring Government logistics support.

A.2.4.4 Commercial drawings/models and associated lists. Commercial drawings/models and associated lists (DI-SESS-81003E) are used to obtain existing information regarding commercial items acquired by the Government and used as end items or as selected subassemblies of Government developed items. They are not to be used for documenting vendor items in a production level TDP. Furthermore, the acquisition of technical data should conform to the requirements of DFARS 252.227-7015, Technical Data – Commercial Items. Prior to contracting for commercial drawings/models, the Procuring Activity should review the drawings/models for their adequacy for the Government's intended uses for the drawings/models. Commercial drawings/models and associated lists should not be acquired as a substitute for product drawings/models and associated lists when the item is developed at Government expense. Commercial drawings/models will most often be ordered under contracts for engineering and manufacturing development or production (including commercial item acquisition). Complete a TDP Option Selection Worksheet – Commercial Drawings/Models and Associated Lists (including tailoring) and include it in the solicitation, contract or purchase order

A.2.4.5 Special Inspection Equipment (SIE) drawings/models and associated lists. SIE drawings/models and associated lists (DI-SESS-81004E) are used for the limited production of SIE required to inspect and test a specific hardware system. SIE drawings/models are not adequate to procure and maintain logistic support of standard military inspection systems and test equipment, which are deployed throughout the maintenance and user communities. This data is intended for use in alternate manufacturing or inspection environments only. If SIE is required for the maintenance and logistics support of the item when deployed, the same types of drawings should be ordered for that SIE as is ordered for the item the SIE supports. SIE drawings/models should only be ordered under contracts containing tasks for engineering and manufacturing development or production.

A.2.4.6 Special Tooling (ST) drawings/models and associated lists. Special tooling drawings/models (DI-SESS-81008E) are used to permit the Procuring Activity or an alternate source to duplicate the functional requirements of tooling that are mandatory for the manufacture of the item. These drawings/models are intended for limited production of tooling used in a manufacturing environment. ST drawings/models may not be adequate to procure and maintain logistic support of tooling which is deployed throughout the maintenance and user communities. If ST is required for the maintenance and logistics support of the item when deployed, the same types of drawings should be ordered for that ST as is ordered for the item the ST supports. ST drawings/models should be ordered only under contracts containing tasks for engineering and manufacturing development or production.

Source: https://assist.dla.mil -- Downloaded: 2017-01-09T06:14Z
Check the source to verify that this is the current version before use.

A.2.4.7 Special Packaging Instructions drawings, models and associated lists.

a. Selection. Prior to ordering packaging data, an engineering task to develop packaging requirements should be included in the contract or purchase order. For additional information on the use and selection of packaging data products refer to MIL-STD-2073-1.

b. Ordering. Require the generation of a TDP containing packaging data in the Statement of Work. Cite the appropriate DID as listed in MIL-STD-2073-1 in the CDRL and enter the tailoring in Block 16 of the CDRL.

A.2.4.8 Specifications.

a. Selection. Refer to MIL-STD-961 for guidance in determining the types of specifications to be acquired, or the Federal Standardization Manual for guidance on composing Commercial Item Descriptions. For specifications related to software documentation see A.2.4.9.

b. Ordering. Require the generation of a TDP containing specifications in the Statement of Work. Cite the appropriate DID as listed in MIL-STD-961 in the CDRL. Reference the completed TDP Option Selection Worksheets in the CDRL. Complete a TDP Option Selection Worksheet (including tailoring) and include it in the solicitation, contract or purchase order. Additional documentation associated with specifications should be ordered as separate data items on the CDRL.

A.2.4.9 Software documentation.

a. Selection. Software documentation is acquired to support software products imbedded in the end item, component systems thereof, or SIE cover by the TDP. Refer to ISO/IEC 12207 for information on selecting and tailoring software documentation for inclusion in TDPs.

b. Ordering. Require the generation of software documentation in the TDP for each software product in the Statement of Work.

A.2.4.10 Quality assurance provisions.

a. Selection. QAPs are acquired to permit the manufacturer, Government or an alternate source to test and inspect the item being defined to ensure acceptability. QAPs should be ordered only under contracts containing tasks for engineering and manufacturing development or production. Product drawings/models containing characteristics which are classified as critical, major or minor in accordance with DOD-STD-2101 should have QAPs.

b. Ordering. Require the generation of a TDP containing QAPs in the Statement of Work. The form and format of the QAP should be clearly delineated in the Statement of Work. Complete a TDP Option Selection Worksheet (including tailoring) and include it in the solicitation, contract or purchase order.

A.2.4.11 Metadata

a. Selection. Metadata is ordered by the Procuring Activity to store, manage, manipulated and provide access to TDP elements. The Metadata required is the data needed by the information management system used by the Procuring Activity to perform these functions. The Metadata needs to be delivered in a format that the information management system can process. The

Source: https://assist.dla.mil -- Downloaded: 2017-01-09T06:14Z
Check the source to verify that this is the current version before use.

Procuring Activity needs to specify the data and its format as part of the selection.

b. Ordering. In the Scope of Work, require the generation of Metadata in accordance with the TDP Option Selection Worksheet. Identify the content and format of the metadata on the worksheet.

A.2.4.12 Supplementary technical data.

a. Selection. Supplementary technical data is data that is in addition to the TDP and that the Procuring Activity has determined to be of benefit to supporting the product throughout its life. The Procuring Activity needs to specify the data and its format as part of the selection process.

b. Ordering. In the Scope of Work, require the activity that generates the required data and require the data to be formatted as stated on the TDP Option Selection Worksheet.

A.2.5 TDP data management products and their uses.

A.2.5.1 Source Control Drawing (SOCD) approval request.

a. Selection. SOCD approval requests are used to ensure that only valid source qualification requirements are included in the TDP. Under Public Law, the Government will actively seek multiple sources for any item for which source qualification is a requirement. This obligation applies to source control items as well as Qualified Products List (QPL) and Qualified Manufacturers List (QML) items. However, Government personnel should take into consideration the adverse impacts of such approval processes on contract costs and schedules, especially when such approval processes are extended throughout the subcontract chain.

b. Ordering. Require the generation of source control drawing approval requests in the Statement of Work. Cite DI-SESS-81010E in the CDRL. Identify the Government activity having source control drawing approval authority and any tailoring in Block 16 of the CDRL.

A.2.5.2 Drawing/Model number assignment report.

a. Selection. A drawing/Model number assignment report provides the information necessary to complete Government design activity records on the use of specific Government drawing/Model numbers. This report should be acquired only when drawings and associated lists are to be identified with Government CAGE Codes and document numbers.

b. Ordering. Require the generation of drawing/Model number assignment reports in the Statement of Work. Cite DI-SESS-81011E in the CDRL and enter the tailoring in Block 16 of the CDRL.

Source: https://assist.dla.mil -- Downloaded: 2017-01-09T06:14Z
Check the source to verify that this is the current version before use.

A.2.5.3 Proposed critical manufacturing process description.

a. Selection. The proposed critical manufacturing process description is used to provide the Procuring Activity with the opportunity to approve or disapprove the documentation of a manufacturing process as critical in the TDP. However, Procuring Activity personnel should take into consideration the adverse impacts of such approval processes on competitive procurement, contract costs and schedules, especially when such approval processes are extended throughout the subcontract chain.

b. Ordering. Require the generation of proposed critical manufacturing process descriptions in the Statement of Work. Cite DI-SESS-81012E in the CDRL. Identify the Procuring Activity having critical manufacturing process approval authority and any tailoring in Block 16 of the CDRL.

A.3 TDP OPTION SELECTION WORKSHEET GUIDANCE FOR FIGURE 2.

The TDP Option Selection Worksheets should be used to identify selected options and tailoring requirements. Additional sheets may be attached to the form as necessary. The following paragraphs provide more detailed guidance on completing the TDP Option Selection Worksheet Figure 2.

A.3.1. Headings. Enter the System and Date Prepared.

A.3.1.1 Contract No. Enter the number of the acquisition document shown in Block E, Contract/PR No., of the DD Form 1423.

A.3.1.2 Exhibit/Attachment No. Enter the number or letter, which appears in Block B, Exhibit, of the DD Form 1423.

A.3.1.3 CLIN. Enter the contract line item number from Block A, Contract Line Item No. (CLIN), of the DD Form 1423.

A.3.1.4 CDRL data item No(s). Enter the data item number(s) from Block 1, Data Item No., of the DD Form 1423 entry for which the TDP Option Selection Worksheet being prepared. If the form applies to more than one CDRL data item, enter all applicable data item numbers.

A.3.2 Completing the TDP option selection worksheet. The following is required to complete the TDP Option Selection Worksheet.

A.3.2.1 Block 1. TDP Lifecycle level. Check the level of TDP required. The level selected should coincide with the requirements of the elements to be selected in Section 5 of the form. Add any remarks necessary for clarification.

A.3.2.2 Block 2. Deliverable Data Products. The options in this block determine the TDP type and format(s), metadata and format(s), associated lists format(s), and supplemental technical data format(s). Determination on type and format should be made based on the government's need for a particular type and format of TDP. In general, during the production phase of the lifecycle, 3D digital models with associated 2D drawings or fully annotated 3D digital models are preferred. During the conceptual development and prototype phase, 3D digital models alone may be sufficient. The TDP format will be clearly stated in the SOW with an understanding of how lifecycle maintenance of the TDP will be performed. When specifying the TDP format, it is important to provide sufficient technical detail—for example, Creo 1.0 (native CAD with version number), STEP AP 203 E2, 3D PDF with PRC (ISO 14739), or other unambiguous electronic

Source: https://assist.dla.mil -- Downloaded: 2017-01-09T06:14Z
Check the source to verify that this is the current version before use.

format specifications. Other format details should be provided as required in A.3.2.8 Block 8. Applicability of Standards—for example, specifying ASME Y14.5 and ASME Y14.41 for fully annotated 3D models.

A.3.2.2.1 2D Drawings. This option determines if 2D drawings are required for delivery. Specify what format is required for the delivery of the drawings.

A.3.2.2.2 3D digital models. This option determines if 3D digital models are required for delivery. Specify if only 3D digital models or 3D digital models with associated 2D drawings are required. Specify what format is required for the delivery of the models.

A.3.2.2.3 Metadata. This option determines if metadata required for delivery. Specify what format is required for the delivery of the metadata.

A.3.2.2.4 Associated lists. This option determines if associated lists are required for delivery. Specify what format is required for the delivery of the associated lists. Use in coordination with Block 7 of the Option Selection Worksheet.

A.3.2.2.5 Supplementary technical data. This option determines if supplementary technical data products are required for delivery. Specify what format is required for the delivery of the supplementary technical data products. Specify the type of supplementary technical data in Block 8 (Other Tailoring). Types of supplementary data could include, but is not limited to, manufacturing instructions, simulations, work flow data, inspection equipment or procedures (which are not required as an inherent part of the TDP or TDP element), manufacturing machine code, design studies, analysis studies, test results, and safety data sheets.

A.3.2.3 Block 3. CAGE code and document numbers. When contractor CAGE Code and document numbers are specified, the documents will be identified with the CAGE Code and document numbers of the contractor or subcontractor having design activity responsibility. Usually the Government will not be able to assume control of the drawing originals (masters), except through a subsequent data acquisition action. If the Government intends to take delivery of the drawing originals and to assume design activity responsibility at some time in the future, then the documents should be identified with a Government CAGE Code and Government document numbers. If the Procuring Activity has already determined the CAGE Code and Government document numbers to be used, the CAGE Code should be entered in the "USE CAGE CODE" block and the range of document numbers entered in the "USE DOCUMENT NUMBERS" block. If the Procuring Activity has not determined the Government CAGE Code and Government document numbers which are to be used, then the Government activity that will specify this information should be identified in the "TO BE ASSIGNED BY:" block.

A.3.2.4 Block 4. Drawing formats and drawing forms. These options specify the drawing format to be used and assign responsibilities for providing the drafting material or media (drawing forms) on which the documents are to be generated.

A.3.2.5 Block 5. TDP elements required. This option determines the elements of the TDP used to fulfill the design disclosure requirements of the TDP element to be delivered.

A.3.2.5.1 Each element selected. This option gives the Procuring Activity the authority to direct the contractor as to which types of element(s) to use by the individual selection of each element. This may be further tailored for each component, subassembly or part.

A.3.2.6 Block 6. TDP data management products. This option determines the management products of the TDP used to fulfill the design disclosure requirements to be delivered.

Source: https://assist.dla.mil -- Downloaded: 2017-01-09T06:14Z
Check the source to verify that this is the current version before use.

A.3.2.7 Block 7. Associated list. This block is used to define the Government's requirements for associated lists as defined in ASME Y14.34.

A.3.2.7.1 Parts lists. Either "INTEGRAL" or "SEPARATE" or "CONTRACTOR SELECT" should be selected. This option requires the contractor to use either an integral or separate parts list for the specific item or part being documented.

A.3.2.7.2 Data lists. Select "REQUIRED" if applicable. Data lists aid in assembling larger sets of drawings. Therefore, data lists should be required on most acquisitions of complex items. When data lists are required, the contractor will be given guidance as to the levels of assembly at which they are required. For example, an electronic system composed of input and output sections made up of equipment racks containing replaceable drawers may require data lists at the drawer, rack, section and system (or end-item) level. Other terms for the required levels may be used.

A.3.2.7.3 Index lists. Select "REQUIRED" if applicable. Index lists are not normally needed for small or moderate sized drawing packages of items that are not complex. However, they help in assembling the larger drawing packages required for major equipments, systems and subsystems. The assembly level at which index lists are required should be specified.

A.3.2.7.4 Wiring lists. Select "REQUIRED" if applicable. A wiring list is prepared to provide information necessary for making wire connections. A wire list may be prepared for one or more related assemblies.

A.3.2.7.5 Application lists. Select either "INTEGRAL" or "SEPARATE" or "CONTRACTOR SELECT" if applicable. This option allows the contractor to provide either an integral or separate application list, if selected, for the specific item or part being documented.

A.3.2.7.6 Other. This block is used to identify other Associated Lists that are required, but, not identified in A through E on the Worksheet. Specify the requirement clearly in the block provided or in Block 9, Other Tailoring.

A.3.2.8 Block 8. Applicability of Standards. This block is used to indicate the applicability of drawing and model standards.

A.3.2.8 Block 9. Other tailoring. This block may be used to tailor any requirement of MIL-STD-31000, ASME Y14.100 with appropriate appendices, a DID, or any other document affecting the content, format, or media of the data product. In addition, if metadata or supplemental technical data was selected in Block 2, the specific type or content requirements should be identified in this block.

Source: https://assist.dla.mil -- Downloaded: 2017-01-09T06:14Z
Check the source to verify that this is the current version before use.

A.4 TDP OPTION SELECTION WORKSHEET - COMMERCIAL DRAWINGS/MODELS AND ASSOCIATED LISTS GUIDANCE FOR FIGURE 3.

The TDP Option Selection Worksheets should be used to identify selected options and tailoring requirements. Additional sheets may be attached to the form as necessary. The following paragraphs provide more detailed guidance on completing the TDP Option Selection Worksheet for Commercial Drawings/Models and Associated Lists, Figure 3.

A.4.1. Headings. Enter the System and Date Prepared.

A.4.1.1 Contract No. Enter the number of the acquisition document shown in Block E, Contract/PR No., of the DD Form 1423.

A.4.1.2 Exhibit/Attachment No. Enter the number or letter, which appears in Block B, Exhibit, of the DD Form 1423.

A.4.1.3 CLIN. Enter the contract line item number from Block A, Contract Line Item No., of the DD Form 1423.

A.4.1.4 CDRL Data Item No(s). Enter the data item number(s) from Block 1, Data Item No., of the DD Form 1423 entry for which the tailoring form is being prepared. If the form applies to more than one CDRL data item, enter all applicable data item numbers.

A.4.2 Completing the TDP Option Selection Worksheet. The following is required to complete the TDP Option Selection Worksheet for Commercial Drawings/Models and Associated Lists.

A.4.2.1 Block 1. Deliverable Data Products. The options in this block determine the deliverable data products type and format. Determination on type and format should be made based on the Government's need for a particular type and format of TDP. In general, during the production phase of the lifecycle, 3D digital models with associated

2D drawings or fully annotated 3D digital models are preferred. During the conceptual development and prototype phase, 3D digital models alone may be sufficient. The TDP format will be clearly stated in the SOW with an understanding of how lifecycle maintenance of the TDP will be performed. When specifying the TDP format, it is important to provide sufficient technical detail—for example, Creo 1.0 (native CAD with version number), STEP AP 203 E2, 3D PDF with PRC (ISO 14739), or other unambiguous electronic format specifications. Other format details should be provided as required in

A.3.2.8 Block 8. Applicability of Standards—for example, specifying ASME Y14.5 and ASME Y14.41 for fully annotated 3D models.

A.4.2.1.1 2D Drawings. This option determines if 2D drawings are required for delivery. Specify what format is required for the delivery of the drawings.

Source: https://assist.dla.mil -- Downloaded: 2017-01-09T06:14Z
Check the source to verify that this is the current version before use.

A.4.2.1.2 3D digital models. This option determines if 3D digital models are required for delivery. Specify if only 3D digital models or 3D digital models with associated 2D drawings are required. Specify what format is required for the delivery of the models.

A.4.2.1.3 Metadata. This option determines if metadata required for delivery. Specify what format is required for the delivery of the metadata. In addition, specify the metadata content requirements under Other Tailoring (Block 2).

A.4.2.1.4 Associated lists. This option determines if associated lists are required for delivery. Specify what format is required for the delivery of the associated lists.

A.4.2.2 Block 2. Other tailoring. This block may be used to tailor any requirement of MIL-STD-31000, ASME Y14.100 with appropriate appendices, a DID, or any other document affecting the content, format, or media of the data product.

Source: https://assist.dla.mil -- Downloaded: 2017-01-09T06:14Z
Check the source to verify that this is the current version before use.

APPENDIX B

MODEL BASED DEFINITION (MBD) – MODEL ORGANIZATIONAL SCHEMA

B.1 Introduction 36

B.2 Purpose 36

B.3 Schema Architecture Overview 37

B.4 Solid Modeling Philosophy 37

B.5 Annotation Framework 38

B.6 Minimal/Conceptual Annotated Model 38

B.7 Standard Organizational Requirements 39

B.8 Defining a model using Model Based Definition 40

Source: https://assist.dla.mil -- Downloaded: 2017-01-09T06:14Z
Check the source to verify that this is the current version before use.

B.1 INTRODUCTION.

This is the Organizational Schema Standard for Model Base Definition (MBD). This schema document was developed to provide a set of reference standards and guidelines for the CAD user. It is intended to be the foundation for design development efforts.

Previously, 3D CAD models had an accompanying 2D drawing. Now, with advances in CAD architecture, all product definition previously shown on a drawing is now defined and displayed directly in the 3D CAD model (See Figure 1). This is accomplished by utilizing a combination of annotations and naming conventions to organize the 3D solid model. This makes the 3D model a single master source for obtaining product definition data and eliminates the need for a 2D drawing.

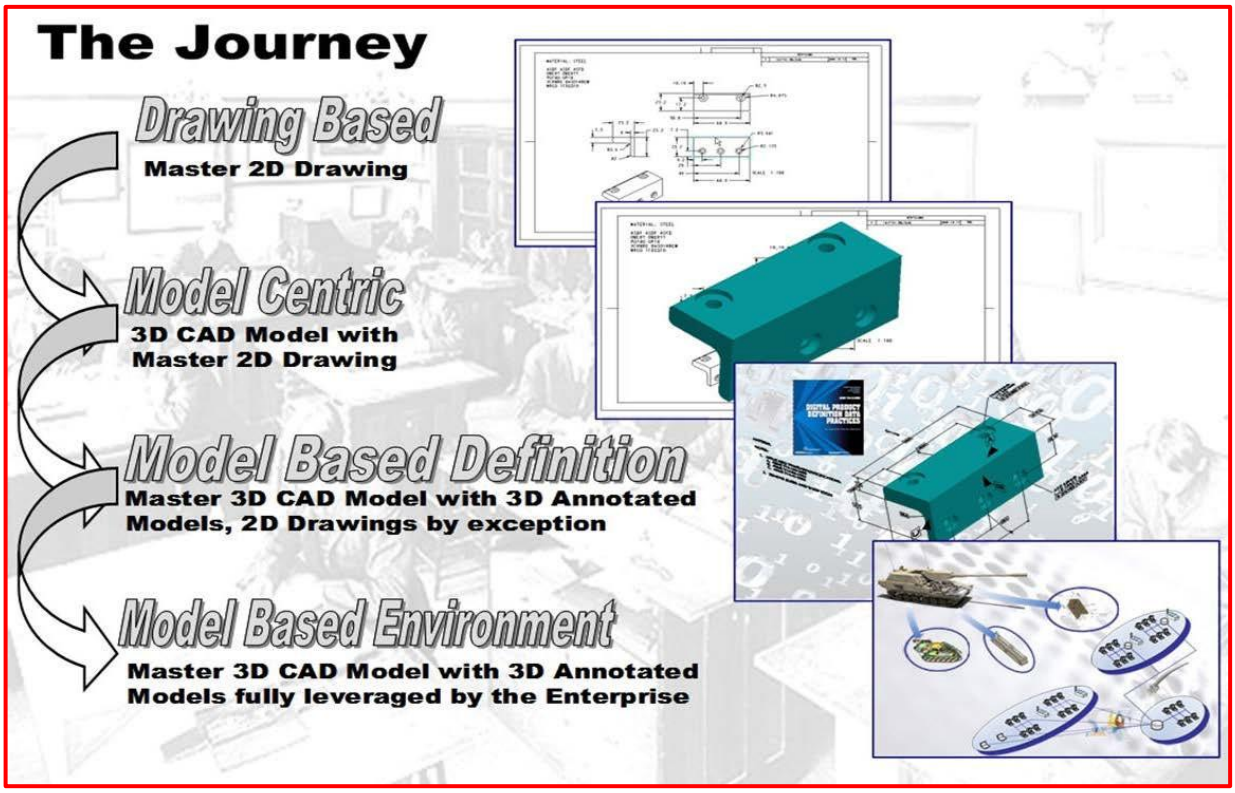

Figure 1. The Documentation Journey.

B.2 PURPOSE.

This document defines recommendations and guidelines for the application and display management of the product definition data. This standard is necessary to establish a common method to facilitate access to the digital product definition data by downstream users. While this document was initially focused on mechanical piece part focused but the intent is for it to provide a foundation for use in any discipline

The Schema document is designed to be compliant with ASME Y14.41 It is defined to work with any CAD system. Note, illustrations in this book are for reference only and not intended to depict reliance to particular CAD software.

The goal of this schema is to define a common practice to improve design productivity and to deliver consistent data to the customer.

Source: https://assist.dla.mil -- Downloaded: 2017-01-09T06:14Z
Check the source to verify that this is the current version before use.

B.3 SCHEMA ARCHITECTURE OVERVIEW.

Modern CAD software contains several tools for organizing product data. This schema uses the organizational elements listed below to format the product data for ease of viewing by downstream users.

Utilizing these tools in a consistent manner provides the foundation for consistent data sharing by downstream users. Defining data in a consistent manner is necessary for successful extraction to light weight viewers used for viewing shared data.

- Combination Views are used to combine multiple model display states. Multiple combination views may be saved to quickly navigate through all the required product definition data.
- View States are used to manage the orientation position of the product that best presents the product definition details. They can include the following display options: orientation, model cross-sections, model display style, simplified representations of the model, and assembly exploded displays.
- Logical Groups are used to manage the display of annotation data and support definition for combination views. Examples in use by CAD software are layers and groups.
- Annotations are a graphic or semantic text entity created to store model information without geometry. They may include both dimensional types and note types. Annotations are used to provide complete product definition.
- Notes are used to capture supplemental data related to the model. This includes General Notes and other notes associated to the model. Additional notes will be created to support data previously displayed on the 2D drawing.
- Meta Data is data that supports the definition, administrative or supplemental data package. Metadata includes all relations, parameters and system information used in a model. This data resides at the model and feature level.

Throughout this document standard naming conventions will be used for the various organizational elements. This will allow for future expansion of other model based venues.

B.4 SOLID MODELING PHILOSOPHY.

The goal of a solid model is to create and provide all design and detailed information, including design intent, to downstream users. This means all the required engineering information is communicated to everyone from one source, the Solid Model. In order for this communication to be effective, consistency is needed in the creation and presentation of each product.

Models are created using “start models” to ensure that “start model information” is present. Using a start part ensures a common beginning for all models, facilitates model specific information extraction, aids navigating thru model data, and sets you up for efficient MBD creation. Maintaining the integrity of model information is the responsibility of all engineers/designers and anyone else who may add or change the model during its creation and revision.

All start part models should contain the following organizational elements to accommodate MBD:

- Standard MBD Combination Views
- Supporting MBD View States
- Supporting MBD Logical Groups
- Required MBD Notes
- Required MBD Metadata

Source: https://assist.dla.mil -- Downloaded: 2017-01-09T06:14Z
Check the source to verify that this is the current version before use.

B.5 ANNOTATION FRAMEWORK.

One of the first decisions that must be made when annotating a model is what level of detail is required. If the documentation is intended to be laser cut or as a prototype then only a minimum level of annotations may be needed. If the design has secondary operations and the model is used for primary operations then only a partial set of annotations may needed to define the unique qualities of the model. If the design is to be built by outside suppliers or delivered to a customer then full annotation may be required.

These different types of annotations translated to the following levels of annotations. The levels are depicted in the examples below.

B.5.1 Minimal/Conceptual Annotated Model.

This level is depicted in Figure 2 and contains the following:

- Envelope Dimensions (overall boundary dimensions of the part)
- "Block" or Profile tolerance as applied to the entire part
- Material and Finish Requirements
- Title Block Information

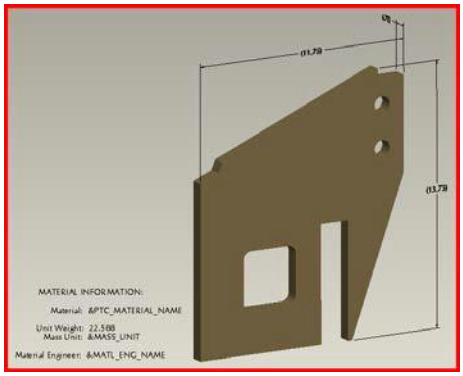

Figure 2. Minimal/Conceptual Annotated Model.

B.5.2 Partial/Developmental Annotated Model.

This level is depicted in Figure 3 and contains the following:

- Envelope Dimensions
- "Block" or Profile Tolerance
- Material and Finish Requirements
- Title Block Information
- Non-Standard Dimensions
- Site Map
- Critical Notes

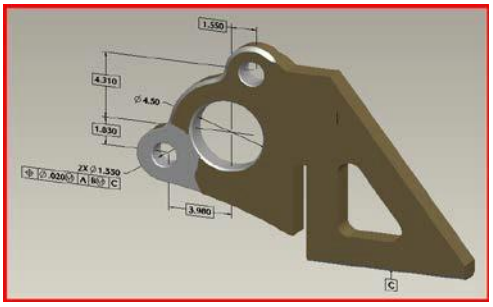

Figure 3. Parial/Developmental Anotated Model.

B.5.3 Full/Production Annotated Model.

This level is depicted in Figure 4 and contains the following:

- Envelope Dimensions
- "Block" or Profile Tolerance
- Material and Finish Requirements
- Title Block Information
- Full Dimensions
- Site Map
- Full Notes
- Auxiliary Views

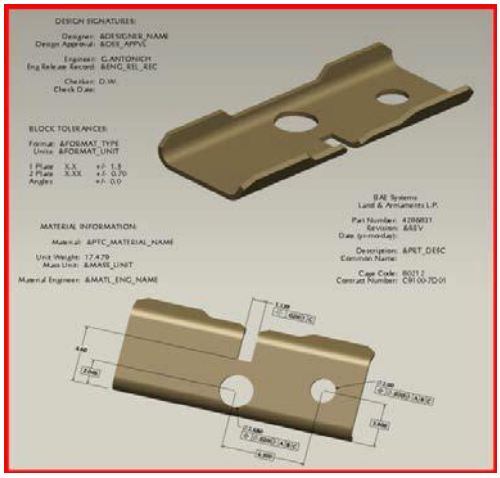

Figure 4. Full/Production Annotated Model.

Source: https://assist.dla.mil -- Downloaded: 2017-01-09T06:14Z
Check the source to verify that this is the current version before use.

B.6 STANDARD ORGANIZATIONAL REQUIREMENTS.

For the annotation framework to be functional it must meet a standard minimum set of organizational requirements. These requirements include any information typically displayed on a 2D drawing (See Figure 5) including:

- Basic title Block and legal information are populated on pre-defined views
- Basic revision history information is populated on pre-defined views
- Dimensional and tolerance information are documented using annotation elements and features.
- The annotations are grouped in appropriate layers as defined by their purpose
- Detail views orientations are saved to best display the appropriate annotations
- Annotation, view and layer information are grouped in combination views for ease of access and publication
- Some textual information may be written to a neutral third party format as an alternative to a "flat-to-screen" display.
- The annotated model is published to a light weight viewer for downstream use by non-CAD users

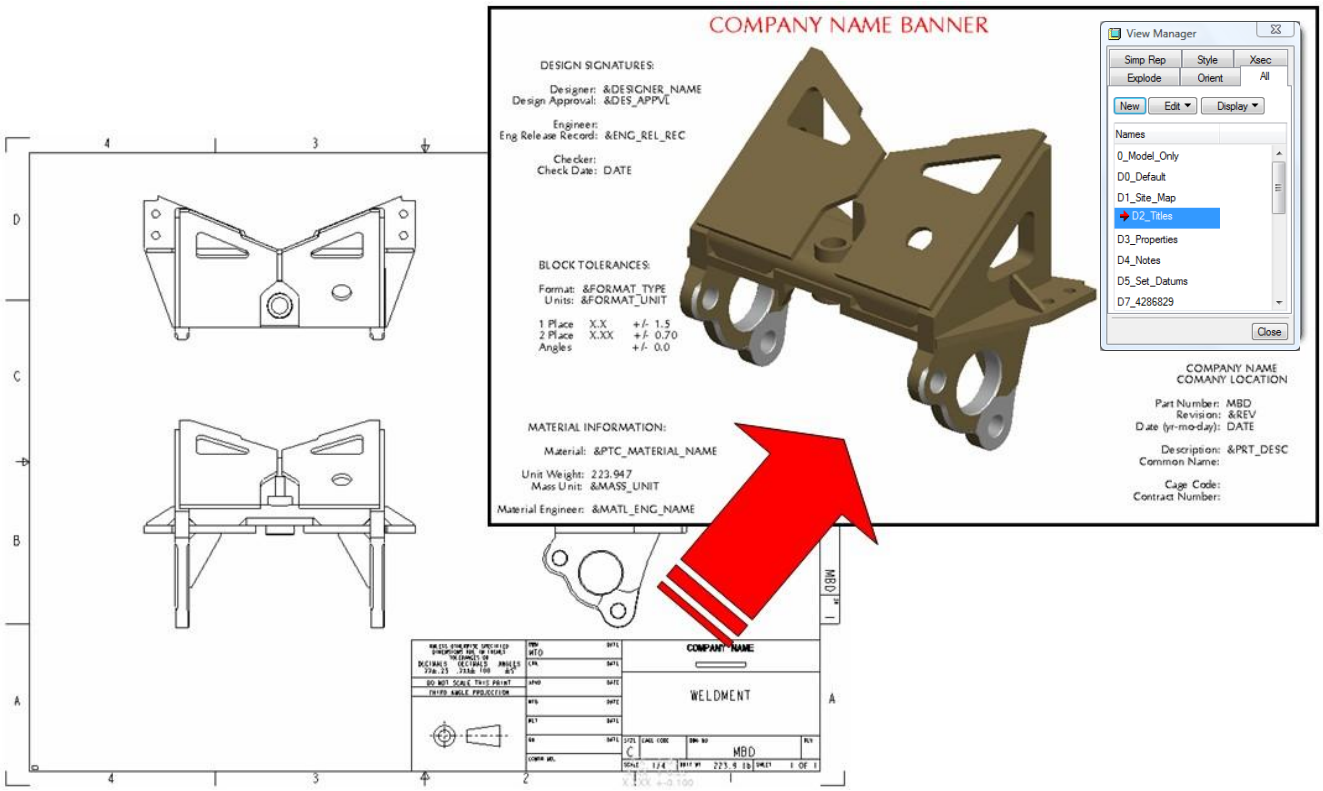

Figure 5: Annotation Framework.

Source: https://assist.dla.mil -- Downloaded: 2017-01-09T06:14Z
Check the source to verify that this is the current version before use.

B.7 DEFINING A MODEL USING MODEL BASED DEFINITION.

What follows is the basic methodology and list of the basic tools and guidelines used to create and organize product data in the 3D model. The guidelines establish a recommended practice to organize and structure model data for viewing by the downstream user (See Figure 6). The downstream user may be a non-CAD user and may view the data in a lightweight 3D viewer as opposed to viewing data from a 2D drawing.

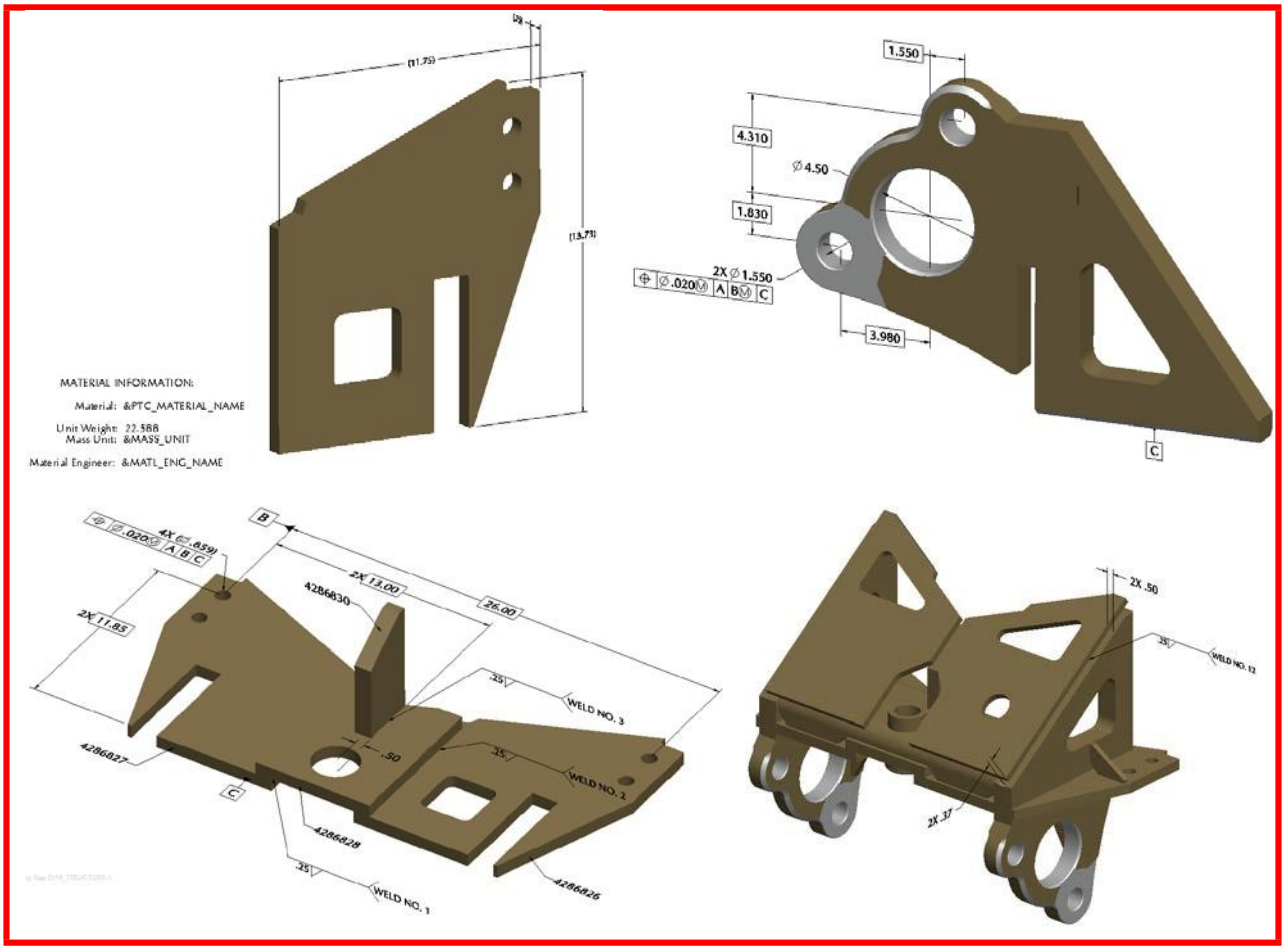

Figure 6. MBD Methods.

B.7.1 Naming Conventions.

Every item supporting MBD should be named in a consistent manor in order to facilitate both understanding and automating data extraction. Features should be named consistently to describe their intended purpose. All other annotations and supporting information should begin with "MBD#_Description" to identify it as MBD data. Future definition prefixes will be named appropriately (See Figure 7 for some examples)

• **Design**	**MBD#_**
• **Manufacturing**	**MBM#_**
• **Inspection**	**MBI#_**
• **Technical Publications**	**MBP#_**
• **Logistics**	**MBL#_**
• **Testing**	**MBT#_**
• **Others?**	**MB?#_**

Figure 7. Definition Prefixes.

Source: https://assist.dla.mil -- Downloaded: 2017-01-09T06:14Z
Check the source to verify that this is the current version before use.

B.7.2 Logical Groups.

This schema uses Logical Groups to manage the display of annotation data and support definition for combination views. Logical Groups support model display requirements for combination Views to comply with ASME Y 14.41-2003 section 5.1.1.

One can organize and control product data items by assigning them to Logical Groups. In many CAD software one can hide and show Logical Groups as necessary, which allows one control the display of multiple data items simultaneously. For example, one can assign notes to a specific layer and then show/hide them as desired with other data. Using Logical Groups, one can organize items and streamline selection because all the layer items are treated as a group. Logical Groups can include other items in a CAD system's database such as features, dimensions, notes, geometric tolerances, and other Logical Groups. Figure 8 shows an example of the use of Logical Groups in this case layers in an annotated assembly model.

The naming convention should be MBD#_Description (should coincide with Combination Views). One exception is Assembly only Logical Groups which should be named MBDA#_Description to aid in display control on higher level assemblies.

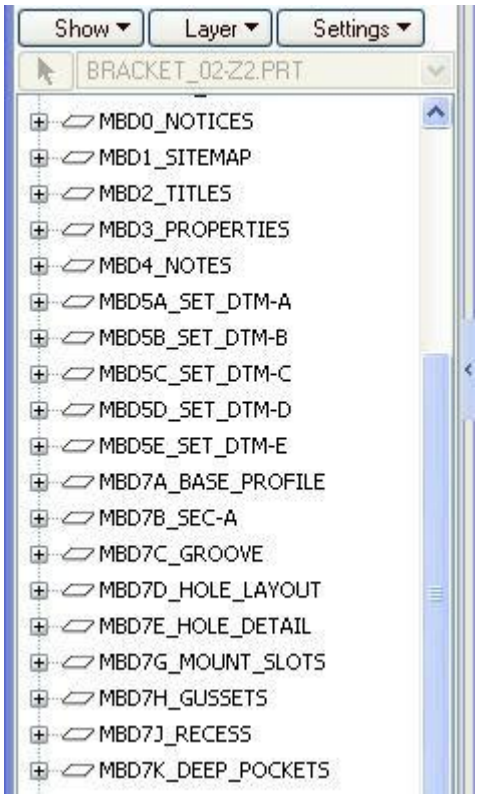

Figure 8. Layer Tree.

Source: https://assist.dla.mil -- Downloaded: 2017-01-09T06:14Z
Check the source to verify that this is the current version before use.

B.7.3 Views States.

View States are used to facilitate the presentation of the model and its annotation to comply with ASME Y14.41 section 3.6.3.

A view state may be saved in a part or assembly model. In many systems the saved view state may be used or referenced in a combination view defined by the user. Figure 9 shows a typical list of view orientations.

View States support model display requirements for combination Views. The following views states should be used to manage data as required:

- Orientation. Views should be shown in an orientation that best displays the detail being defined. Orthographic view arrangements may be used but are not required with MBD. Views may be set in a 3D orientation. In additional to the principle views, zooming in on a specific area to clearly represent specific details may be added.

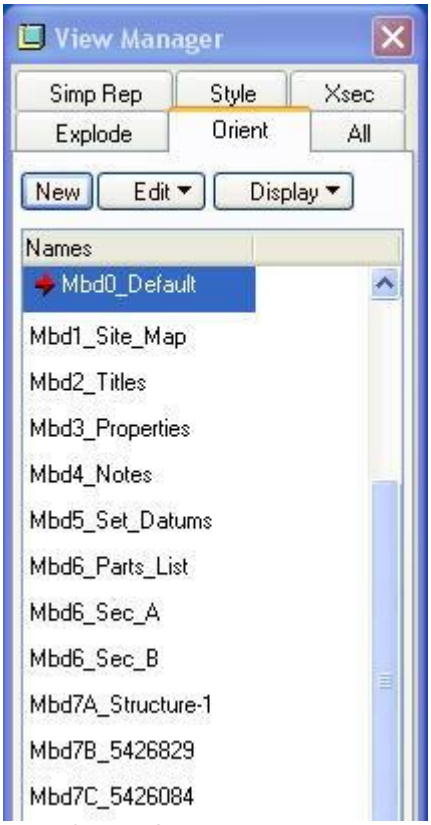

Figure 9. View State Menu.

- Cross Sections. Section views should be used when interior detail cannot be shown clearly on the typical 3D views. One can streamline the display of cross-sections by using 3D cross-sections created in the model. By default, 3D cross-sections, are available for display in the model. One can display and control the cross-hatching of these 3D cross-sections.

- Display Styles. The display style for viewing components may be controlled using the display style menu. One can store a component with an assigned display style and retrieve that style by name so that One can return the model to the regular display style without losing defined settings.

- Simplified Reps Simplified representations are used to control which members of an assembly are brought into session and displayed. Each simplified representation can correspond to an area or level of detail of the assembly in which individual areas or groups are being defined.

- Explode States. An exploded view of an assembly shows each component of the model separated from other components. An exploded view affects only the assembly appearance. Design intent and the true distance between assembled components does not change.

The naming convention should be D#_Description (should coincide with it's corresponding Combination View).

Source: https://assist.dla.mil -- Downloaded: 2017-01-09T06:14Z
Check the source to verify that this is the current version before use.

B.7.4 Combination Views.

Combination Views are used for defining an associative relationship between digital elements to comply with ASME Y14.41 section 5.2.1.

A combination view allows one to combine and apply multiple View states and Logical Groups. Multiple combination views may be saved to display all the required product definition data. Figure 10 shows a typical list of combination views.

Combination views allow one to quickly navigate customized model display states to display required information by combing multiple View states. Combination views should be used to manage the following data:

- View States (orientation, x-sections, styles, simplified representations and explode states)
- Logical Group Status
- Annotations (dimensions, GD&T, notes, text or symbols)

The naming convention should be MBD#_Description, items which have numerous such as MBD7 should have the numeric followed by an alpha character and description such as MBD7C_Front_Pocket.

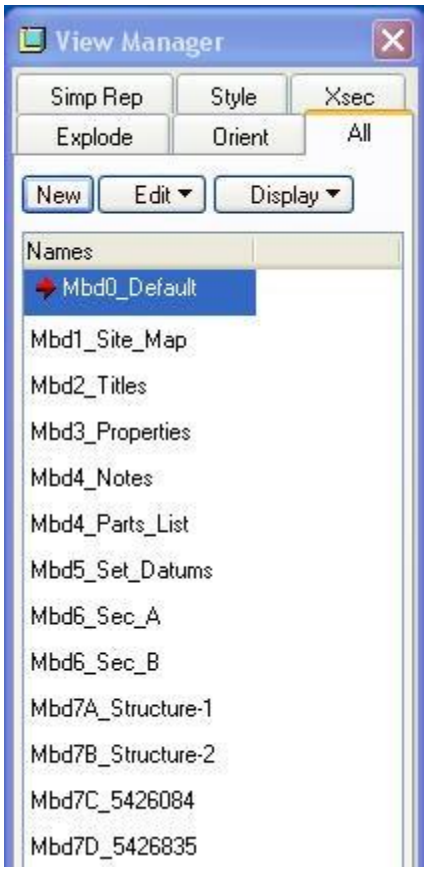

Figure 10. Combination Views.

The following is a list of suggested Combined States:

State Name	Description of Contents Displayed
• 0_Model_Only	Although it is not required for MBD this view is recommended to quickly hide all annotation displaying only the model
• MBD0_Default	Legal notice, Proprietary notice, ITAR notice and/or other company specific notices. NOTE**:** File to be saved in this state
• MBD1_Site_Map	Notes identifying all available combination views – 3D roadmap
• MBD2_Titles	Title Block information (Company name, design description, model number, cage code, design signatures, block tolerances, material and finish requirements)
• MBD3_Properties	Overall boundary dimensions, mass properties, material, finish requirements and title block information
• MBD3_Characteristics	Optional – Key characteristics
• MBD4_Notes	General note information
• MBD5_Set_Datums	Set datums
• MBD6_User_Derfined	Exploded Views and Assembly Unique views
• MBD7_User_Defined	Define the details of the Machining operations using annotations
• MBD8_User_Defined	Define the details of the Welding operations using annotations

Source: https://assist.dla.mil -- Downloaded: 2017-01-09T06:14Z
Check the source to verify that this is the current version before use.

B.7.5 Annotations.

An annotation is a note-type entity created to store model information without geometry. Annotation elements and features allow the user to define dimensions and supporting data in 3D space. They can be parametric and will rotate with the model (Figure 11). Annotations are used to provide complete product definition to comply with ASME Y14.41 section 3.

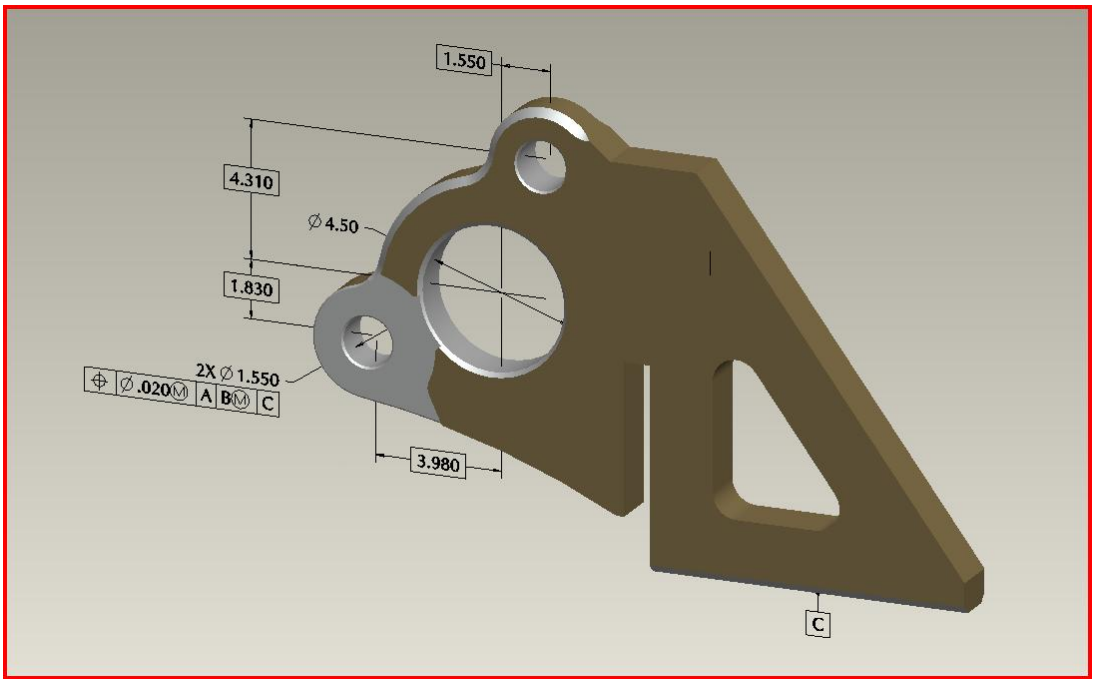

Figure 11. Annotations.

Annotations can exist independently within the model, or be included in a feature. Each annotation data type should be placed on an appropriate layer and orientation plane corresponding to the view it represents:

Driving Dimensions are model dimensions created and owned by features.

Driven Dimensions are used to measure the size and shape of features within a model. The value of a driven dimension changes when the size and shape of the features are modified. But they are not used to define or modify the feature geometry. Driven dimensions can have tolerances, to which manufactured components can be accepted or rejected.

Notes are text strings that can either placed as a fixed note or attached to an object. One can place any number of notes in a model and orient them in multiple orientations.

Symbols are collections of draft geometry and text that either serve as a simple labeling object, or that represent more complicated objects such as assemblies or electrical components. The symbol may show parameters as text notes. When the instance is placed, the parameters read the values associated with the drawing.

Geometric Tolerances (GTOLs) provide a comprehensive method of specifying where on a part the critical surfaces are, how they relate to one another, and how the part must be inspected to determine if it is acceptable. They provide a method for controlling the location, form, profile, orientation, and run out of features.

Surface Finishes are associated with surfaces in the part. Each surface symbol applies to the entire surface. One can add surface finish symbols to a model using standard surface finish symbols available in most CAD tools, or One can create and save Owner own surface finish symbols.

Source: https://assist.dla.mil -- Downloaded: 2017-01-09T06:14Z
Check the source to verify that this is the current version before use.

B.7.6 Annotation Orientation.

An annotation orientation refers to the plane or the parallel plane in which the annotation lies, the viewing direction and the right direction or text rotation. One should maintain text orientation in a view that provides consistency for viewing. Figure 12 show an example of an annotation orientation plane.

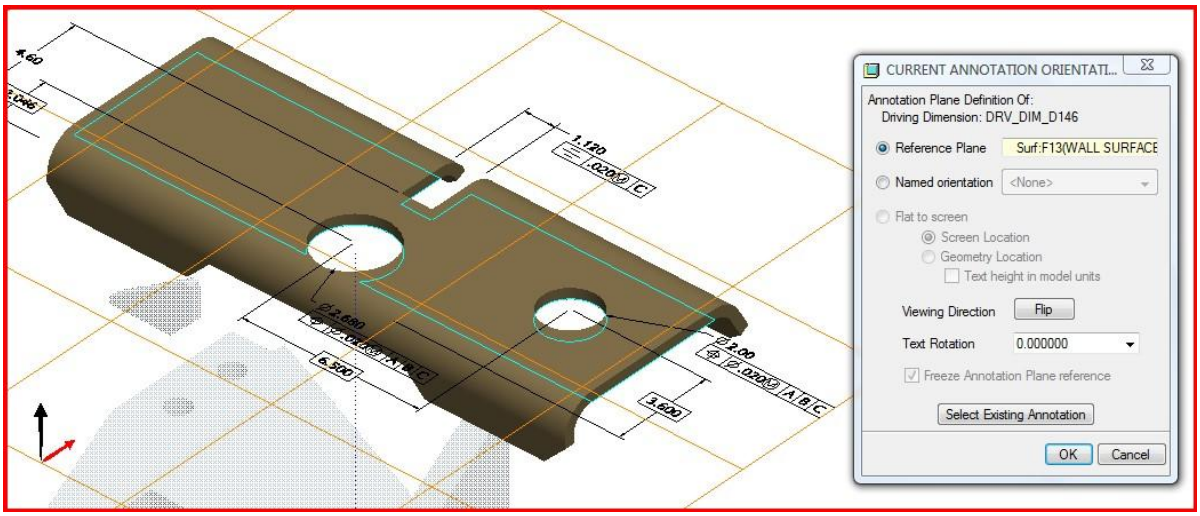

Figure 12. Annotation Orientation Plane.

The orientation of the annotation plane should be maintained relative to the model geometry as the model is manipulated in 3D to comply with ASME Y14.41 section 5.2.3.

The following annotation data types should be placed on an appropriate orientation plane:

- MBD0_Notices - Flat to screen by screen location
- MBD1_Site_Map – Appropriate orientation plane
- MBD2_Titles – Flat to screen by screen location
- MBD3_Properties - Appropriate orientation plane
- MBD4_General_Notes - Flat to screen by screen location
- MBD5_Set_Datums - Appropriate orientation plane
- MBD6_Assembly - Appropriate orientation plane
- MBD7_Machining - Appropriate orientation plane
- MBD8_Weld - Appropriate orientation plane

B.7.7 Model Notes.

Model notes are text strings that can be attached to objects or displayed in a fixed location flat to screen. One can attach any number of notes to any object in the model to comply with ASME Y14.41, section 3.4.2.

One can include model notes in an annotation feature. This way, one can define a re-useable library of specific notes, and then place them as annotations in various models, as appropriate.

When inserting notes, one has a series of options to set up the note properties, such as attachment type and location, leader style, and text position.

Source: https://assist.dla.mil -- Downloaded: 2017-01-09T06:14Z
Check the source to verify that this is the current version before use.

All models should have the following notes to accommodate MBD:

Note Name	Description of Note
• Banner	A fixed note such as your company name or other indicator such as Top Secret
• Site_Map	Note/s identifying all available combination views
• Notice	ITAR notice or other classified specific restricted data information
• Legal	Competition sensitive, government rights and/or distribution statement
• Proprietary	Company proprietary information
• Title_Block	Company name, part number, revision, date, part description, cage code and/or contract number. Define as parameters
• Design_Signatures	Designer name, design approval record, engineer name, engineer release record, checker name, check date. Define as parameters
• Block_Tolerances	Format type, format units, 1 place tolerance, 2 place tolerance, Angle tolerance. Define as a parameter for extraction and reuse.
• Material	Material specification, coating, heat treating, unit weight, mass units, material engineer record. Define as a parameter for extraction and reuse.
• Finish	Finish specification, preparation call out, paint note, etc. Define as a parameter for extraction and reuse.
• Notes	Originator specific notes including: ASME Y14.41, model query note - When model query is required, a notation stating the requirement for query of the model or associated data should be added to the general notes (per ASME Y14.41, sec 3.1.1, 5). Values queried from the model for any feature(s) without any tolerance or datum target specifications assigned should be reference dimensions (per ASME Y14.41, sec 3.1.1, 8).

Source: https://assist.dla.mil -- Downloaded: 2017-01-09T06:14Z
Check the source to verify that this is the current version before use.

B.7.8 Metadata.

Meta Data is data that supports the definition, administrative or supplemental data package. Metadata includes all relations, parameters and system information used in a model. This data resides at the model and feature level.

Certain information such as title block data, material, block tolerances, etc. should be defined as parameters to allow the option for future extraction of the data. In addition, this allows the information to be displayed in any number of combination view and to easily update all instances via an associative link to the parameter name.

It is suggested that models should contain the following elements to accommodate MBD:

Critical Data Elements List		
ID	Element	Description
P1	ALT_MATERIAL	Use as needed to define alternative materials
P2	BOM_NOMENCLATURE	Nomenclature for use in the parts list
P3	CAGE_CODE	Company Cage Code
P4	CHK_DATE	Checked date
P5	CHK_NAME	Checked by
P6	CONTRACT_NO	Parameter for contract number
P7	CONTROL_ACTIVITY	The organization code of the group with the control authority
P8	CRIGHT_DATE	Copyright year
P9	DATA_RIGHTS	The code, which identifies the rights status of the information on the Model or contained in the file identified by this record.
P10	DESIGN_ACTIVITY	The name of the design activity whose CAGE is assigned to the Model.
P11	DIST_CODE	The distribution statement code letter (A, B, C, D, E, F, or X) of the model identified in this record.
P12	DOC_TYPE	A code entered that identifies the class or type of engineering model (e.g., product drawing, parts list, wire list, safety data sheet, etc.).
P13	DRAWING_NUMBER	Drawing Number
P14	DWN_DATE	date the drawing was created
P15	DWN_NAME	Name of the drawing author
P16	ENG_DATE	Date of the approval engineer's signature
P17	ENG_NAME	Name of the approval engineer
P18	EQV_PART_NUM	USE if needed to define an alternant part for this item
P19	FILE_FORMAT	The specific product data file format with version, e.g., HP 7586, TIFF Group 4, RS-274X, AutoCAD 2000, DXF r14, EDIF 400 Schematic, Intel Hex-32, etc. No version needs to appear for DXF or JT files since many conversion programs do not specify the versioning.
P20	ITAR_NOTE	Legal note parameter for ITAR statements
P21	KG_WT	The weight of the product in kilograms

Source: https://assist.dla.mil -- Downloaded: 2017-01-09T06:14Z
Check the source to verify that this is the current version before use.

Critical Data Elements List		
ID	Element	Description
P22	LB_WT	The weight of the product in pounds
P23	LEGAL_NOTES	General note parameter for contractual and legal statements
P24	LT_0	Liner tolerance
P25	LT_X	Liner tolerance
P26	LT_XX	Liner tolerance
P27	LT_XXX	Liner tolerance
P28	MATERIAL	General note parameter for material
P29	MATL_ENG	Name of the material engineer
P30	MATL_ENG_DATE	Date of the material engineer's approval
P31	MATL_SPEC	Name of material specifications
P32	MATL_TYPE	Material Type
P33	MFG_DATE	Date of the manufacturing engineer's approval
P34	MFG_NAME	Name of the manufacturing engineer
P35	MODEL_NUMBER	The model number of the product
P36	NEXT_ASSY1	The number of the next higher assembly using this product
P37	NEXT_ASSY1_QTY	Quantity of Usage per Next Higher Assembly
P38	NEXT_ASSY2	The number of additional next higher assemblies using this product
P39	NEXT_ASSY2_QTY	Quantity of Usage per Next Higher Assembly
P40	NEXT_ASSY3	The number of additional next higher assemblies using this product
P41	NEXT_ASSY3_QTY	Quantity of Usage per Next Higher Assembly
P42	NEXT_ASSY4	The number of additional next higher assemblies using this product
P43	NEXT_ASSY4_QTY	Quantity of Usage per Next Higher Assembly
P44	NEXT_ASSY5	The number of additional next higher assemblies using this product
P45	NEXT_ASSY5_QTY	Quantity of Usage per Next Higher Assembly
P46	NOMENCLATURE	The nomenclature description of the product
P47	OA_HEIGHT	Over All Height of the product
P48	OA_LENGTH	Over all length of the product
P49	OA_WIDTH	Over all width of the product
P50	PIN	The PIN is an identifier assigned by the responsible design activity or by the controlling nationally recognized standard, which uniquely identifies (relative to that design activity) a specific item.
P51	PIN_REV	The revision level assigned to a PIN.

Source: https://assist.dla.mil -- Downloaded: 2017-01-09T06:14Z
Check the source to verify that this is the current version before use.

Critical Data Elements List		
ID	Element	Description
P52	PROD_DATA_TYPE	The appropriate product data type, e.g., native drawing, neutral drawing, view only image drawing, raster drawing, native model, neutral model, loft data, ASCII text, programming data file, tubing data, Gerber artwork data, etc.
P53	PROPRIETARY	Note parameter for proprietary statements
P54	QA_DATE	Date of quality approval
P55	QA_NAME	Name of Quality Engineer
P56	RAW_MATL_NO	The part number of the raw material
P57	REV	Revision Level of the drawing
P58	REV_APPROVAL	Name of the revision approver
P59	REV_DATE	Date of the revision approval
P60	REV_DESC	Description of the Revision
P61	SECURITY_LVL	The code that identifies the classification of the model.
P62	SW_NAME	The name of the native software CAD program used to generate the vector file.
P63	SW_OS	The computer operating system for the CAD software.
P64	SW_OS_VER	The version of the computer operating system for the CAD software.
P65	SW_VENDOR	The vendor of the native CAD software program.
P66	SW_VERSION	The version number and/or letters of the native software CAD program used to generate the file.
P67	TOL_HEADING_1	Tolerance information
P68	TOL_HEADING_2	Tolerance information
P69	TOL_TABLE	Metric tolerance table used
P70	UNIT_WT	Unit weight of the part for BOMs
P71	UOM	Unit of measure for the model
P72	UOW	Unit of weight for the model
P73	VOLUME	Volume of the product
P74	WELD_ENG	Name of the weld engineer
P75	WELD_ENG_DATE	Date of the weld engineer's approval
P76	WEP_SYS_MODEL	If this file is unique to a weapon system model.
P77	WEP_SYS_NAME	The weapon system name that the drawing is applicable to.

Source: https://assist.dla.mil -- Downloaded: 2017-01-09T06:14Z
Check the source to verify that this is the current version before use.

3D TDP VALIDATION GUIDE

C.1 Forward. 52
C.2 Scope. 53
C.3 Applicable documents. 56
C.3.1. Government documents. 56
C.3.2. Non-government documents. 56
C.4 Definitions. 57
C.5 General requirements. 65
C.5.1. Native or original 3D model data. 65
C.5.2. Equivalent model data. 66
C.6 Detailed requirements. 68
C.6.1. Acceptance criteria. 68
C.6.2. Data checking processes and procedures. 77
C.6.3. Model healing processes and procedures. 80
C.6.4. Conversion of 3D models from one format to another. 81
C.6.5. Re-mastering of 3D model data. 81
C.6.6. Long-term archiving of 3D model data. 83
C.7 Exhibit A – Product geometric integrity criteria. 85
C.7.1. Geometry. 85
C.7.2. Surface criteria. 92
C.7.3. Edge criteria. 103
C.7.4. Edge loop criteria. 105
C.7.5. Face criteria. 108
C.7.6. Shell criteria. 114
C.7.7. Solid body criteria. 119
C.7.8 Assembly structure quality criteria. 124

Source: https://assist.dla.mil -- Downloaded: 2017-01-09T06:14Z
Check the source to verify that this is the current version before use.

C.7.9 Annotation quality criteria. 129

C.8 Exhibit B – Recommended numerical thresholds for geometry validation criteria..... 134

C.8.1. Department of Defense Product Data Validation Criteria Worksheet 135

C.9 Exhibit C – derivative model validation criteria..... 137

C.10 Exhibit D – Examples of geometry checking software and procedures. 149

C.11 Exhibit E -- Examples of geometry healing software and procedures. 151

C.12 Exhibit F – Examples of semi-automated re-mastering. 157

C.13 Exhibit F – Examples of derivative model validation software……... 163

Source: https://assist.dla.mil -- Downloaded: 2017-01-09T06:14Z
Check the source to verify that this is the current version before use.

C.1 FORWARD.

The use of three-dimensional model-based definition (3D MBD) for design of military equipment has become common practice. Prime contractors on every major weapons program use 3D computer-aided design (CAD) software to design, analyze, manufacture, and inspect the mechanical components and structures of their products.

Yet because 3D model data is not currently approved within the Department of Defense for use as master product data, contractors must submit 2D drawings of their designs to serve as permanent records throughout each system's life. Drawings are less useful than 3D models for activities taking place later in the equipment's life such as manufacturing spare parts, improving existing designs, and analyzing systems when unexpected failures occur. It is therefore desirable that the Department of Defense be capable of accepting 3D models in lieu of or in addition to drawings.

In order to accept 3D mathematical models, the DoD requires approved processes for validating that 3D models are suitable for master reference data. This document provides technical guidance to the Government and its contractors about validating digital 3D models prior to their distribution to Government agencies and subcontractors during the design, manufacturing, and logistical-support phases of the life of a weapons system.

The reason that formal, algorithmic validation processes are necessary for 3D models is because models may contain subtle defects that can prevent them from being used by ancillary applications such as numerically controlled manufacturing, finite element analysis, and inspection with coordinate-measuring devices. This guide identifies and classifies the causes of defects in 3D digital models, indicates which defects are likely to cause difficulties for various types of computer applications that use the models, and provides recommended tolerances and acceptance criteria for models. Validation may be divided into 3 classes: geometry, annotation, and attributes.

- Geometry validation identifies defects in geometric entities such as lines, curves, and surfaces, and errors in relationships among entities, such as gaps or overlaps. Geometry validation also encompasses model topology including faces, edges and vertices.

- Annotations consist of symbols, dimensions, geometric tolerances, notes, and other symbols attached to the model. Validation examines the locations, orientations, values, layers, context, and syntax of annotations.

- Model attributes consist of views (model orientation and zoom state), layers, numerical values, notes, material descriptions, or combinations of the above that are required to complete the product definition but are not visible when viewing the model. Attributes must be evaluated for their existence, type (integer, floating point, text), and values.

The recommended practices in this guide are based on currently available, commercial technology for inspecting and validating 3D models produced by commercial CAD software. The validation

Source: https://assist.dla.mil -- Downloaded: 2017-01-09T06:14Z
Check the source to verify that this is the current version before use.

procedures described herein are necessary for producing quality models but are not comprehensive. Additional criteria are desirable for certification of 3D annotations, piping and tubing, wiring and wire harnesses, sheet metal, fiber-reinforced composites, assembly constraints and bills of material, and non-geometric product attributes. As commercially accepted methods are developed for validating these model characteristics, the guide can be extended to include them.

C.2 SCOPE.

This guide is intended to act as a reference document for establishing practices for validating the quality of 3D CAD models submitted to or produced by Department of Defense agencies that procure weapons systems, machinery, and equipment. The recommendations contained herein may be applied to 3D models in the proprietary native formats of various CAD/CAM and CAE applications or to equivalent derivative forms of models that have been translated to one of the following:

- International standard formats such as ISO 10303
- Compact visualization formats such as JT Open, ProductView, eDrawings, or 3D PDF
- Other proprietary commercial CAD native formats.

Complete 3D product models are complex structures. Consequently, there are several aspects of model data that should be checked prior to release for manufacturing or long-term archival storage. At present, software for checking all classifications of model data quality is not available commercially. Consequently, this guide has been designed to be extensible so that additional checks and acceptance criteria can be added to future releases. The following table shows planned quality classifications addressed by this guide in the current and future releases and is subject to change.

3D model quality classifications					
	Native		Derivative		
Use Case	Design & analysis	Manufacturing	ISO 10303 (STEP)	Visualization	Translation
Geometry	release 1	release 1	release 1&2	release 2	release 1&2
Annotations	release 1&2	release 1&2	release 1&2	release 1&2	release 1&2
Structure	release 3	release 3	release 3	release 3	release 3
Attributes	release 4	release 4	release 4	release 4	release 4
Lifecycle data	not applicable	not applicable	release 5	not applicable	release 5

Geometry consists of the mathematical description of individual part surfaces. Modern CAD systems employ what is called the boundary representation method for describing model geometry. Boundary representations consist of curves, surfaces, edges, and faces. In a valid model, the faces meet at the edges to form a closed volume.

Source: https://assist.dla.mil -- Downloaded: 2017-01-09T06:14Z
Check the source to verify that this is the current version before use.

Geometry is used in a variety of manufacturing processes including numerically controlled milling, turning, and cutting; making of jigs, fixtures, and hard gauges; additive fabrication; and coordinate-measuring-machine (CMM) inspection. Model geometry also is used along with attribute data in various analytical processes including finite-element analysis, computational fluid dynamics, kinematics, and dynamics.

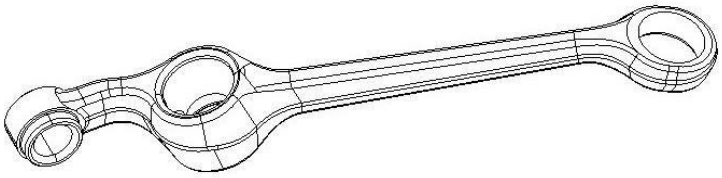

Figure 1. Example of 3D model geometry

Annotations are attached to 3D geometry to provide additional manufacturing information such as important dimensions and tolerances, datum features, notes, flags, and symbols for properties such as surface finish or weld types.

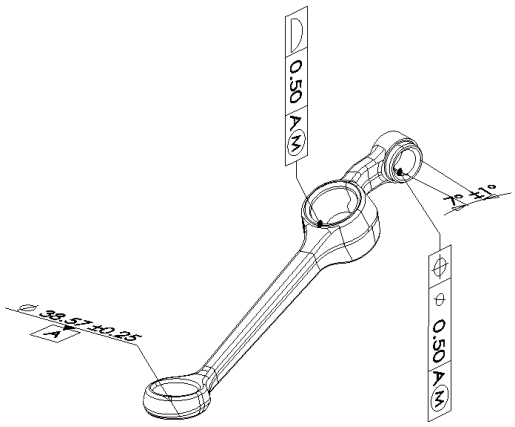

Figure 2. 3D model geometry with annotations

Model Structure refers to the relationships among parts in a product assembly and among features in a feature-based part. The structure of most complex product models is hierarchical. Complex assemblies consist of subassemblies containing parts or possibly more subassemblies. Parts of feature-based CAD models consist of a base feature onto which additional features are applied. Features may themselves have dependent features.

Source: https://assist.dla.mil -- Downloaded: 2017-01-09T06:14Z
Check the source to verify that this is the current version before use.

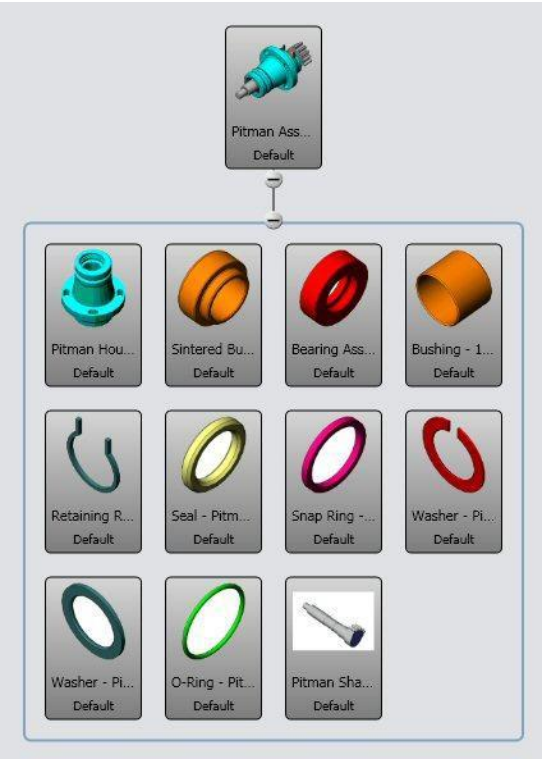

Figure 3. Example of the structure of a simple assembly model

Attributes are non-geometric data stored in part or assembly files. Each attribute consists of a named field populated with specific data about the part. For instance, attributes may include material type, applicable standards, manufacturer's brand names and part numbers or the name of the designer who made the model. Attribute data may be necessary to manufacture the part (such as material type) or useful for administrative purposes, such as the name of the designer and the date the part was created.

Lifecycle Data consist of information that describes the state of the part within a controlled procedure for development, review, release for manufacture, retention for maintenance and upgrades, and retirement and disposal. For example, the revision level and release date are lifecycle data that describe the administrative state of the part and change as the product moves through its review and approval cycle. Lifecycle data don't describe properties inherent in the part (such as the material type or manufacturer) that are necessary information to make or procure the part.

Source: https://assist.dla.mil -- Downloaded: 2017-01-09T06:14Z
Check the source to verify that this is the current version before use.

C.3 APPLICABLE DOCUMENTS.

C.3.1. Government documents.

MIL-STD-967 Department of Defense Standard Practice, Defense Handbooks, Format and Content,

C.3.2. Non-government documents.

ANSME Y14.5M *Mathematical Definition of Dimensioning and Tolerancing*, American National Standards Institute

ASME Y14.41 *Product Definition Digital Data Set Practices*, American Society of Mechanical Engineers

Curves and Surfaces for Computer Aided Geometric Design, a Practical Guide, Gerlad Farin, Academic Press 1988

*Initial Graphics Exchange Specification 5.3***,** U.S. Product Data Association (US PRO) 1996

ISO 10303-59:2008, *Industrial automation systems and integration -- Product data representation and exchange* -- Part 59: Integrated generic resource -- Quality of product shape data

ISO/DIS 10303-203:2011, *Industrial automation systems and integration -- Product data representation and exchange* -- Part 203: Application protocol: Configuration controlled 3D design of mechanical parts and assemblies

ISO 10303-209:2001 Edition 2 Rev 1.1 – October, 2011 *Industrial automation systems and integration -- Product data representation and exchange* -- Part 209: Application protocol: Composite and metallic structural analysis and related design

ISO 10303-232:2002 *Industrial automation systems and integration -- Product data representation and exchange* -- Part 232: Application protocol: Technical data packaging core information and exchange

ISO/PAS 26183:2006 *SASIG Product data quality guidelines for the global automotive industry*

Recommended Practices for Geometric Validation Properties (2nd Extension), June 16, 2008, CAx Implementor Forum

Recommended Practices for Assembly Validation Properties Release 1.0, June 11, 2008, CAx Implementor Forum

White Paper for Long Term Archiving and Retrieval of Product Data within the Aerospace Industry (LOTAR): Technical Aspects of an approach for application, Project steering committee of Aerospace LOTAR, August 30, 2002

Source: https://assist.dla.mil -- Downloaded: 2017-01-09T06:14Z
Check the source to verify that this is the current version before use.

LOng Term Archiving and Retrieval of digital technical product documentation such as 3D, CAD and PDM data.
PART 100: Common concepts for Long term archiving and retrieval of CAD 3D mechanical information, prEN 9300-100:2008
PART 110: Long Term Archiving and Retrieval of CAD mechanical 3D Explicit geometry information, prEN 9300-110:2008
PART 115: explicit CAD assembly structure, prEN 9300-115:2008
European Association of Aerospace Industries – Standardization (ASD-STAN), May 30, 2008

JAMA / JAPIA PDQ Guideline, CAD Subcommittee, Electronic Information Exchange Committee, Japan Automobile Manufacturers Association, Inc., September 2001

SASIG *Product Data Quality Guidelines for the Global Automotive Industry*, Document Version 2 Revision 1, May 2005

VDA-Recommendation 4955/2, *Scope and Quality of CAD/CAM Data*, "CAD/CAM" Working Group in the Verband der Automobilindustrie-Raw Material Committee (VDA-AK "CAD/CAM"), September 1999

VDA-Recommendation 4958/3, *Long term archiving (LTA) of digital product data not based on technical drawings*, "CAD/CAM" Working Group in the Verband der Automobilindustrie-Raw Material Committee (VDA-AK "CAD/CAM"), September 2006

C.4 DEFINITIONS.

Accuracy. The closeness of agreement between a measured or computed value and the theoretically true value of the object being measured or modeled. In 3D CAD systems, accuracy may refer to closeness with which a 3D model edge or surface intersection approximates its theoretically true value.

Analytic Representation. A geometric entity capable of being represented by an algebraic expression in precise form.

Angle. The degree of rotation of either of two intersecting lines, a line and a surface, or two intersecting surfaces necessary to produce coincidence with the other, the rotation being in the plane of the lines and about the point of intersection.

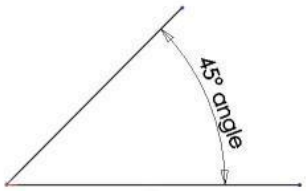

Source: https://assist.dla.mil -- Downloaded: 2017-01-09T06:14Z
Check the source to verify that this is the current version before use.

Annotations. Notes or symbols attached to 3D models that provide additional information not inherent in the model geometry such as tolerances, notes, flags, and symbols for properties such as surface finish or weld types.

Attributes. Non-geometric data stored in 3D model files.

B-Spline (Basis Spline). A mathematical representation of a curve or surface using polynomials.

Boundary. The limit or extent of a geometric entity or object.

Boundary Representation (B-Rep). The geometric representation of 3D objects employing explicit geometry with a consistent topological structure. Geometry consists of entities that are points, curves (including straight lines), and surfaces (including flat planes). Topological entities consist of vertices, edges, and faces that define the relationships among geometric entities.

Closed. A curve or surface without a starting or ending point.

Computational Fluid Dynamics (CFD). A set of numerical techniques for simulating and analyzing fluid flows.

Computer Aided Design (CAD). Any of a class of computer software programs used to design manufactured or constructed objects, such as buildings, power plants, vehicles, weapons systems or their subsystems or components.

Computer Aided Manufacturing (CAM). Use of computer software to control and manage manufacturing processes, such as automatically coordinated operations of conveyor systems, cutting and forming machines, and riveting and welding machines.

Conic. Any portion of cone, which is defined as a three-dimensional shape tapering smoothly from a flat circular base to a point.

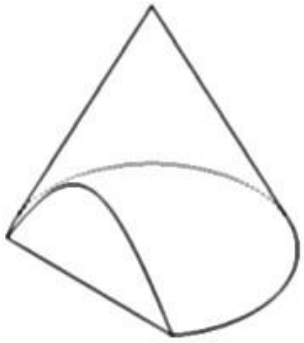

Source: https://assist.dla.mil -- Downloaded: 2017-01-09T06:14Z
Check the source to verify that this is the current version before use.

Continuous. An object or geometric entity characterized by uninterrupted extension in space.

Control Points. A set of points that determines the shape of a spline curve. Each point on the curve is evaluated as a weighted sum of the control points. Control points lie outside the radius of curvature of the spline curve, forming a convex hull.

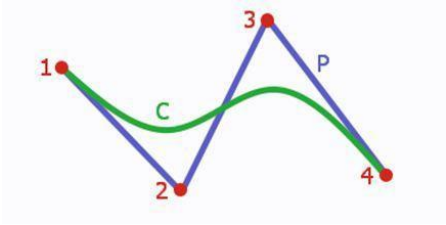

Coordinate. A point in 3D space expressed as three numbers defining a location along a set of given axis, i.e.; the X axis, Y axis and Z axis.

Coordinate-Measuring Machine (CMM). A device for measuring the physical geometrical characteristics of an object. This machine may be manually controlled by an operator or it may be computer controlled. Measurements are defined by a probe attached to the third moving axis of this machine. Probes may be mechanical, optical, laser, or white light.

Contracting Officer. A person with authority to enter into, administer, and /or terminate contracts and make related determinations and findings for the U.S. Government curvature – the rate of change per unit of arc length of the angle through which the tangent turns in rolling around the curve.

Curve. An image of a continuous function (of which a straight line is a special case).

Degenerate Curve or Surface. A geometric entity that has collapsed to a point or singularity.

Degree of a Curve or Surface. The integer value of the maximum exponent of a polynomial describing a curve or surface.

Derivative (Model). A model derived or translated from its native format to a functionally equivalent form that is either proprietary or conforming to an international standard.

Dynamics. The simulation and analysis of the causes of motion and changes in motion in a machine or mechanical system.

Edge. A topological entity that connects two vertices and defines the limits of a face.

Extent. The minimum box-shaped region in 3D space that completely surrounds a geometric object or entity.

Source: https://assist.dla.mil -- Downloaded: 2017-01-09T06:14Z
Check the source to verify that this is the current version before use.

Face. A topological entity consisting of a portion of a surface bounded by a loop.

Feature – In 3D CAD. A feature is a portion of an object defined by a procedure and controlled by parameters. Changing the parameters changes the feature dimensions. Examples of features include round holes, arbitrary cutouts, extrusions, volumes of revolution, sweeps, and lofts.

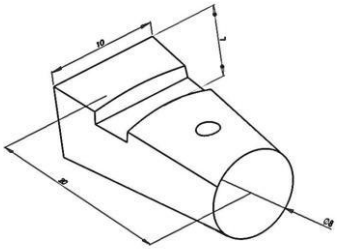

Finite Element Method (FEM). A numerical technique for finding approximate solutions to systems of partial differential equations. FEM is applied to calculations of stress, strain, and deflection, temperature distribution and heat transfer, electromagnetic and similar problems. FEM, also called finite element analysis (FEA), is characterized by the subdivision of solid objects into tetrahedral or hexahedral finite elements. Thin-walled objects may be approximated by two-dimensional shell elements having three or four sides.

Fillet. A rounded shape connecting two surfaces which join at an angle less than 180 degrees to prevent the occurrence of a sharp (non-tangent) edge. The cross-section of the fillet may be a single radius, a conic or other smooth shape with ends tangent to the connecting surfaces.

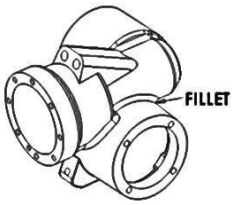

Fixture. A custom device used to locate and in some cases hold a work piece during a manufacturing process such as milling or assembly.

Gap. The distance between geometric entities that are defined to be topologically coincident but in reality are not. In general, gaps occur at the intersection of two spline-based surfaces (such as a NURBS) or other spline-surface and an analytical surface. In such cases, it may not be possible to define a single edge curve that lies on both surfaces at all points.

Gauge. An custom fabricated inspection tool used to check that a work piece is within its allowable manufacturing tolerances.

Source: https://assist.dla.mil -- Downloaded: 2017-01-09T06:14Z
Check the source to verify that this is the current version before use.

Geometric Dimensions And Tolerances (GD&T). A general term for a system of applying dimensional annotations and tolerances to drawings or models defined by ANSI Standard Y14.5.

Geometry. The surface shape of a mechanical part.

Healing. The process of correcting errors in shape or topology to eliminate quality defects.

History Tree. A hierarchical diagram of 3D model features that shows their relationships and the order in which they were created.

Initial Graphics Exchange Specification (IGES). The first standard format for describing 2D and 3D CAD data originally developed by the US National Bureau of Standards (now the National Institute of Standards and Technology).

Jig. A structure similar to a fixture in that guides a tool to its correct position in addition to locating and supporting the work piece.

Kinematics. The simulation and analysis of the motion of bodies without consideration of the forces necessary to cause the motion.

Knot. One of a series of points lying on a spline curve or surface that partitions the curve or surface into a series of polynomial segments.

Lifecycle Data. Information that describes the state of the part within a control procedure for development, review, manufacture, logistical support, retirement, and disposal.

Loop. A closed topological entity consisting of connected edges.

Mid-Plane Geometry. The mid-plane is an offset from the solid surface which lies either on the inside outside or some distance between the inner and outer surfaces. It may also apply to tapered surfaces as the surface that lies equidistance between two surfaces. Mid-plane geometry is typically used to simplify models for analysis in which shell or surface elements are defined.

Native (Model). A 3D model in the (usually proprietary) format of the CAD system in which it was originally derived or modeled.

Non-Manifold. A mathematical space that does not locally obey the properties of Euclidean (i.e. intuitive) 3D geometric space.

NURBS (Non-Uniform Rational Basis Spline). A form of b-spline characterized by the use of weighted control points that enables it to exactly represent any conic section.

Normal Vector. The vector at any point that is perpendicular to a surface or curve.

Source: https://assist.dla.mil -- Downloaded: 2017-01-09T06:14Z
Check the source to verify that this is the current version before use.

Numerically Controlled Manufacturing (NC Manufacturing). The use of a digital code to drive the position and speed of an automated manufacturing machine such as a mill, lathe, router, or flame- or laser-cutter.

Offset. A curve or surface that is separated from another curve or surface by a constant normal distance.

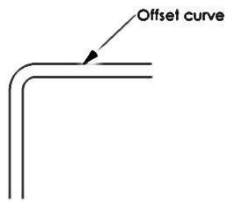

Overall Extent. Length of the diagonal of a box bounding any 3D object.

Overlap. A condition in which two geometric entities (curves, surfaces, edges, faces, or shells) occupy a portion of the same space.

Parameter. A mathematical variable.

Patch. The fundamental element of a surface. Patches are the three-dimensional analogs of splines, which can be connected end-to-end to form a curve. In like fashion, multiple patches can be combined to form a larger surface.

Planar Curve. A curve lying on a plane.

Plane. A surface in which a straight line joining any two points lies entirely on the surface.

Polynomial. An algebraic sum of terms whose factors are either constants or positive (or zero) integral powers of the variables.

Precision. The number of digits (decimal or binary) used to store coordinates and other numerical data in 3D models.

Product Data Management (PDM) System. A database system that controls access to 3D engineering models and other product data, including approvals, release levels, and non-graphic attributes.

Product Data Quality (PDQ). Synonymous with 3d model data validation.

Round. A rounded shape connecting two surfaces which join at an angle greater than 180 degrees to prevent the occurrence of a sharp (non-tangent) edge. The cross-section of the fillet may be a single radius, a conic or other smooth shape with ends tangent to the connecting surfaces.

Source: https://assist.dla.mil -- Downloaded: 2017-01-09T06:14Z
Check the source to verify that this is the current version before use.

Segment. A section of a line or curve bounded by two end points and characterized by a single mathematical expression.

Sew. The process of combining discrete faces into a single shell or solid model.

Shell. An open set of sewn faces (i.e. a boundary representation) that is not closed.

Sketch. A two-dimensional profile containing parameters used in a feature.

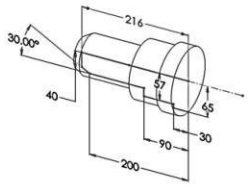

Solid. A set of sewn faces (boundary representation) enclosing a volume.

Spline. A special type of piecewise polynomial curve whose flexibility mimics a thin strip of wood or metal originally used in shipbuilding and aircraft lofts.

Standard For The Exchange Of Product Data (STEP). The informal name for ISO standard 10303 *Product Data Representation and Exchange.*

Structure. The relationships among parts in a product assembly or among features in a feature-based part.

Surface. A mathematical representation of a flat or curved bounded space having length and width but no thickness. A surface may consist of multiple surface patches adjacent on all internal edges.

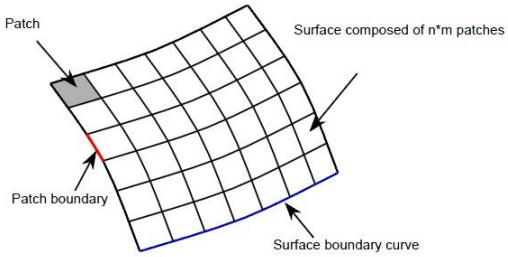

Threshold. The minimum or maximum measured value that indicates the existence of a quality defect. For example, the distance threshold for evaluating a gap between a surface and its trimming curves implies that if the maximum distance between the surface and the curves is greater than or equal to the specified minimum value, then the gap shall be considered a quality defect.

Tolerance. The maximum allowable deviation between any point on a geometric entity and its theoretical true position.

Source: https://assist.dla.mil -- Downloaded: 2017-01-09T06:14Z
Check the source to verify that this is the current version before use.

Topology. The branch of mathematics that describes the properties of geometric systems that remain constant irrespective of their dimensions. (adjective: topological) Each of the following examples of hexahedra has varying topologies because their number of edges and vertices differ.

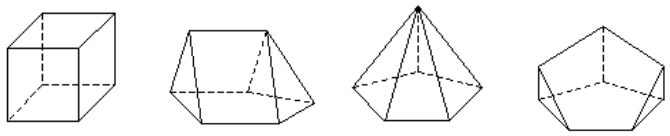

Translation. The conversion of a 3D CAD model from one format to another.

Trimmed Curve or Surface. A curve or surface whose extents are limited by intersection with other curves or surfaces.

Vertex. A topological construct representing the intersection of two or more edges.

Visualization. A 3D model whose primary purpose is to be viewed by people. Visualization models are often faceted representations and may not suitable for processing by computer applications such as analytical mesh generation, numerically controlled programming, or machine inspection.

Volume. A bounded three-dimensional space.

Work Piece. The physical product of an NC manufacturing operation.

Source: https://assist.dla.mil -- Downloaded: 2017-01-09T06:14Z
Check the source to verify that this is the current version before use.

C.5 GENERAL REQUIREMENTS.

Criteria for acceptable 3D model quality depend on the types of applications that will employ the models. For example, a model that is used primarily as a visual aid may look acceptable. However, if that same model is translated to another CAD system or employed to generate tool paths for numerically controlled (NC) manufacturing machines or to produce finite element models for analysis, it may contain hidden errors that cause applications that use the data to fail. Such defects may include gaps or long and narrow faces too small for human eyes to see. They may also include self-intersecting curves and surfaces.

Designers of parts that contain invisible defects may not be aware that they have created them. Because design is an iterative process, designers may apply multiple features in the same local area to produce a desired shape. In attempting to resolve the geometry and topology of the features, the CAD software itself may introduce defects that cause problems for other applications using the model geometry.

Defects also may be introduced by data translation software used to convert proprietary CAD formats to standard formats, such as IGES or STEP, or to the proprietary formats of other software vendors. Such defects may be caused by software programming errors or because various systems employ slightly different algorithms for generating model geometry. Problems may also be caused when the resolution or precision to which the CAD system computes complex geometric intersections differs in the originating and receiving systems.

Because defects may be caused without the knowledge of the people using the data, automated data-checking software is required to identify errors. So-called healing software may be required to correct the errors.

The data acceptance criteria of the government will depend upon the use to which 3D models will be applied. Models used simply for design reviews may contain unseen errors without doing any harm. However, models that are intended for use as manufacturing masters, as geometry for analysis, or for long-term archival storage (whose future uses can't be determined) should be subjected to more rigorous acceptance criteria.

This guide provides suggested values and recommendations for different classes of data use. The use classes employed in this document are defined as follows:

C.5.1. Native or original 3D model data.

Native or original 3D models are those that have been created in a commercial CAD or modeling application such as Parametric Technology's Pro/Engineer or Creo, Siemens PLM software's NX or Solid Edge, Dassault Systèmes CATIA or SolidWorks, or Autodesk's AutoCAD or Inventor. Native data has not been translated to any other format following its release in the native format. There are two distinct use cases for native data.

Source: https://assist.dla.mil -- Downloaded: 2017-01-09T06:14Z
Check the source to verify that this is the current version before use.

Design and Analysis. Creation, viewing, and modification of the original 3D models, preparation of associated drawings, and analysis of models with techniques such as the finite-element method, boundary elements, computational fluid dynamics, and rigid body dynamics. Data used for design and analysis must be free of defects that would cause CAD system malfunctions and visual defects in drawings or models.

Manufacturing. The production of physical prototypes or parts directly from 3D model data by methods such as numerically controlled milling and turning or additive freeform fabrication. Manufacturing applications also include use of 3D models for inspection by optical scanning or coordinate-measuring instruments. Manufacturing data must maintain the highest positional accuracy of all surfaces because it is used to render of inspect working parts.

C.5.2. Derivative model data.

Derivative 3D models have been translated from their originating format to other formats.

ISO 10303. An international standards organization format with a documented internal structure (also informally called the Standard for the Exchange of Product data or STEP). STEP may be used for long-term archival storage or as an intermediate medium for translation when the target systems are unknown. Data translated to standard formats must maintain the highest levels of accuracy and freedom from defects because its ultimate uses are unknown.

Visualization. Viewing of 3D models for design reviews, cost estimating by suppliers, and other applications in which the fidelity of appearance but not a high degree of manufacturing accuracy are required. Once data has been translated to a form for visualization, it should no longer be used for manufacturing. Visualization formats include 3D PDF, Siemens PLM Software JT, Parametric Technology's Pro/View and Creo Visualization, and Autodesk's DWF. Models used for visualization must look right and the annotations associated with them must be accurate. Visualization models are subject to the least stringent validation criteria because it will not be used for manufacturing or engineering changes.

Translation to Other Proprietary Formats. Data may be translated from one proprietary format to another for the purposes of manufacturing or because an organization is shifting from one brand of CAD software to another. Translated data may be modified by the receiving system and used for manufacturing and inspection applications. Translated data must be free from defects that would cause errors in the receiving systems. Model tolerances must be within those required by the receiving system.

The final decision about which types of errors are acceptable in 3D models and the values (such as gap width) that are acceptable must ultimately be determined by the parties who are sending and receiving data. In most cases these people will be the program managers for the Government and its contractors.

The fundamental challenge of validating whether a derivative model is equivalent to its native

Source: https://assist.dla.mil -- Downloaded: 2017-01-09T06:14Z
Check the source to verify that this is the current version before use.

model is to overlook the negligible variation inherent in the process which created the derivative and to clearly identify any significant variation which is unacceptable at that stage in the model's lifecycle. The best practice is to match entities of the same type using key characteristics which generally have minimal variation introduced in the derivation process. For example, a graphic translation of an annotation should preserve the location, orientation, attachment point and total length of its presentation curves. But a semantic translation, or manual remastering, will often only preserve its orientation and associated geometry – introducing significant variation in its location, attachment point and presentation curve length.

Entity matching must account for common structural changes such as filtering, splitting and merging. For example, if a derivative model generation process always ignores hidden entities then these must be filtered by the validation process. If it is common for a cylindrical face which defines a hole to be split into two hemispherical faces, this must be accounted for during validation.

Entities in either model which have no acceptable match in the other model should be identified as unmatched and should not be included in deviation or difference calculations. Entities which match one-to-one, or in a split or merged relationship, should then be validated with the appropriate deviation and difference criteria.

Source: https://assist.dla.mil -- Downloaded: 2017-01-09T06:14Z
Check the source to verify that this is the current version before use.

C.6 DETAILED REQUIREMENTS.

C.6.1. Acceptance criteria.

C.6.1.1. Geometric integrity.

The Automotive Industry Action Group (AIAG) has defined a system for classifying and coding product data quality criteria. The codes allow criteria to be referenced in a consistent fashion in documents, databases and in computer applications that check 3D models. This guide employs a subset of the codes defined by the AIAG.

Each code consists of three parts:

The domain identifier (a single-byte alphabetic character) - X

The representation identifier (two alphabetic characters) - YY

The parameter identifier (two alphabetic characters) – ZZ

Example: A-YY-ZZ

Permissible values for the domain identifier
G Geometry-3D CAD model data
O nOn-geometric data
Proposed extensions
A Annotation data

Permissible values for the representation identifier
CU CUrve
ED EDge
FA FAce
LO edge LOop
SH SHell
SO SOlid model representation
SU SUrface representation
Proposed extensions
AN Annotation element
AS Assembly (top-level or subassembly)
MO Model
PT ParT in an assembly
SV Saved View

Source: https://assist.dla.mil -- Downloaded: 2017-01-09T06:14Z
Check the source to verify that this is the current version before use.

Permissible values for the parameter identifier

AN	ANalytical representation
CL	CLosed element
CR	Curvature Radius
DC	Degenerate Curve
DP	Degenerate Point
EG	EDge gap
EM	EMbedded elements
FG	FraGmented
FO	FOlded element
FR	FRee element or face
HD	excessively High Degree
IK	Indistinct Knots
IC	Item data Consistency
IS	InterSection
IT	Inconsistent Topology
LG	Large Gap
MU	MUltiple elements
NA	NArrow element
NM	Non-Manifold
NS	Non-Smooth curvature between elements (G2 discontinuity)
NT	Non-Tangent angle between elements (G1 discontinuity)
OU	Over-Used element
RN	Relatively Narrow
SA	Sharp Angle
TI	TIny elements
UN	UNused elements
VF	View Frames
VO	VOid
WV	WaVy element

Proposed extensions

DA	Different element Attribute
DE	Different element Enclosure
DL	Different element Location
DO	Different element Orientation
DR	Different element coloR
DS	Different Size
DT	Different Type
DV	DeViant element
LS	Large Size
MI	Missing element
MR	MeRged element
NG	Non-Graphical
SE	Sewn element
SP	Split element
TE	Tiny element Enclosure
TO	Tiny Offset element
TX	Tiny convex element
UM	UnMatched element
US	UnSewn element
UV	UnViewed element

Source: https://assist.dla.mil -- Downloaded: 2017-01-09T06:14Z
Check the source to verify that this is the current version before use.

Usage of 3D CAD model data determines the recommended acceptable threshold values for each of the product data quality criteria. For example, an acceptable value for design might be unacceptable for data exchange or numerically controlled manufacturing.

Product data quality geometry criteria are defined in Exhibit A of this guide. Recommended threshold values for representative usage classifications are indicated in Exhibit B. These suggested values should be used as a starting point for refining acceptance criteria for each class of products acquired by the DoD. For example, a welded steel frame would be expected to have larger threshold values and fewer acceptance criteria than precision parts for an internal combustion engine. It is the responsibility of the Contracting Officer's technical representative to increase or reduce the threshold values suggested in Exhibit B or apply additional criteria from Exhibit A, if experience with a specific use of 3D model data warrants such deviations.

Refinement of quality acceptance criteria should be based upon a scientific method of successive refinements. The following process is recommended for identifying the relevant criteria and their appropriate thresholds for each use case.

1. Identify the downstream application, the digital model reuse methodology, and the acceptance criteria. Application examples include mesh generation for CAE, translation to another CAD system, and NC toolpath generation. If, for example, a model fails to sew into a valid solid in the target system after it is translated, then the model contains defects that are unacceptable. Likewise if a numerically controlled toolpath can't be generated with sufficient accuracy, then the source model may be deemed defective.
2. Gather a representative set of models containing features and tolerances common across each category of design data. Strive for models that are small in size but have varying degrees of complexity and variation.
3. Process the models through the downstream application(s) and separate them into two groups: those which satisfy the acceptance criteria and those which do not. Analyze each test model with all potential data-quality criteria and record their extreme values. For example, identify the maximum Large Edge Gap (G-LO-LG) and the smallest Tiny Edge (G-ED-TI) in each test model.
4. For each potential data quality criterion, chart the extreme values for the two groups of test models. Identify the threshold which best predicts when a test model will be in the unacceptable group. If for a given criterion, this process does not indicate a threshold defect value, then the criterion may be judged to have no effect on model quality and should be removed from the list of acceptance criteria.

Sometimes a test model will contain an outlier, a defect that is not responsible for its unacceptable behavior but which causes the statistical correlation to be skewed. Such outliers can be confirmed by removing them from the test model, without changing the rest of the model, then repeating the acceptance test and the data quality analysis on the redacted model.

Source: https://assist.dla.mil -- Downloaded: 2017-01-09T06:14Z
Check the source to verify that this is the current version before use.

Over time it is a good practice to update data quality requirements as technology changes. In general, as a 3D model use technology matures, the breadth of formerly bad data that can be successfully handled will increase. Therefore data quality requirements for those use cases can be relaxed.

C.6.1.2. Geometric accuracy.

Geometry received in its originating CAD system format is presumed to be correct. It may actually contain errors, but these are due to designer errors and must be caught in prerelease checking or prototype fabrication.

Geometry of 3D CAD models also may be distorted by translation processes. CAD systems employ subtly different algorithms for describing shapes, and receiving CAD software may interpret model parameters in ways that differ from the system in which it originated. Errors are especially prone to occur when dimension-driven features are translated among systems.

Geometric accuracy also may be impaired when models are translated to and from industry standard representations such as ISO 10303. These errors may be caused by varying interpretations of the standard by mathematicians and programmers who write the software that reads and writes data in standard formats.

In order to assure that geometric accuracy has not been impaired by translation processes, a set of sampling points is defined on each model surface in the originating system. By comparing the deviation of these points from surfaces of the translated bodies, the government may be assured that the surfaces have not unacceptably deviated from their original shapes.

C.6.1.2.1. Sample Point Selection.

Choosing the appropriate number and distribution of sampling points requires compromise between two conflicting objectives. Too many points increase model file sizes thereby impairing performance. Too few points may allow unacceptable deviations in the translated surface to pass undetected.

An unambiguous and fast method for generating sampling points for NURBS curves and surfaces is by way of Greville points. Greville points are special locations on the geometry that can reasonably indicate its shape. There are as many Greville points as control points. If the control points of any curve or surface form a straight line or plane, respectively, so does the curve or surface geometry. [Farin pp122-124, p136]

Source: https://assist.dla.mil -- Downloaded: 2017-01-09T06:14Z
Check the source to verify that this is the current version before use.

Greville points are the 3D locations on NURBS geometry evaluated at knot average values. The average knot values, called Greville abscissae, are defined as follows:

Given a non-decreasing unique knot vector values {U0, U1, U2,...,Un),

the Greville abscissae are defined by

Gi = 1/D*Sum(Uj)

where

D = Degree over the knot vector

i=0 to Number of control points

j=i to (i+D-1)

Thus, for a NURBS curve, C(u), the Greville points are evaluated as

Pi=C(Gi)

Similarly for a NURBS surface, S(U,V), a grid of Greville points are generated given the two non-decreasing unique knot vectors

{U0,U1,U2,...,Un} and {V0,V1,V2,...Vn}. The Greville abscissae for U

and V directions are defined by

Gi = 1/Du*Sum(Uj)

Gk= 1/Dv*Sum(Vm)

Where

Du = Degree in the U direction

Dv = Degree in the V direction

i=0 to Number of control points in the U direction

k=0 to Number of control points in the V direction

j=i to (i+Du-1)

m=k to (k+Dv-1)

Then, the Greville points are evaluated as

Pi,k = S(Gi,Gk)

Source: https://assist.dla.mil -- Downloaded: 2017-01-09T06:14Z
Check the source to verify that this is the current version before use.

The Greville algorithm should be used to sample points on all NURBS surfaces and all edge curves. In general, when two NURBS surfaces intersect, the curve that defines the intersection edge will not be coincident with the actual intersection but will approximate it within an accuracy specified by the 3D modeling system. Consequently, it is important to check that both edge curves and surfaces have not deviated from their sample points by more than the specified tolerance (described below).

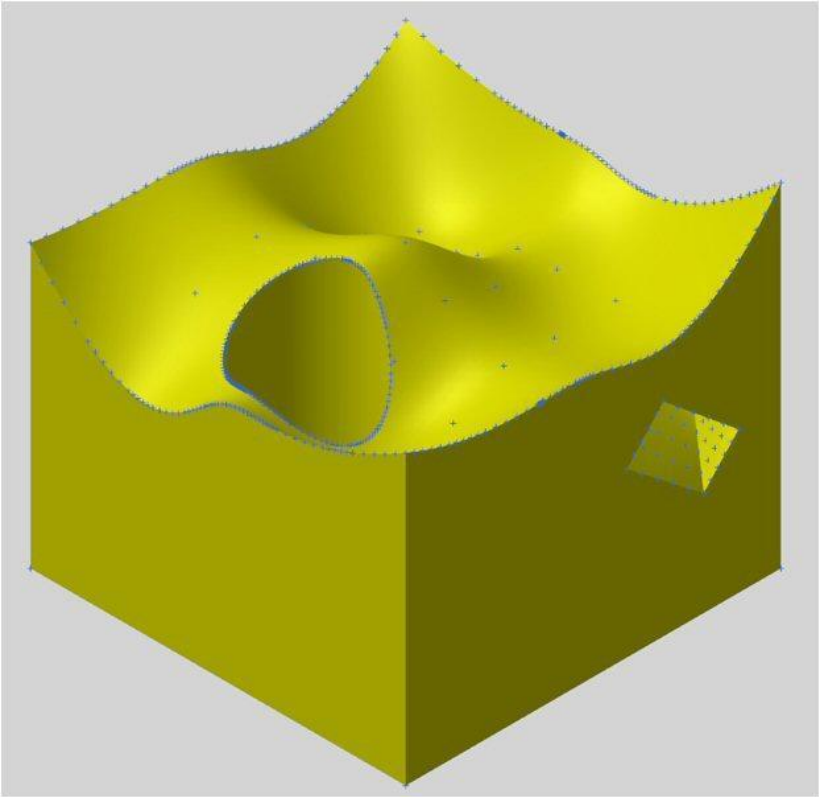

Figure 4. An example of Greville points on both a surface and its edge curves.

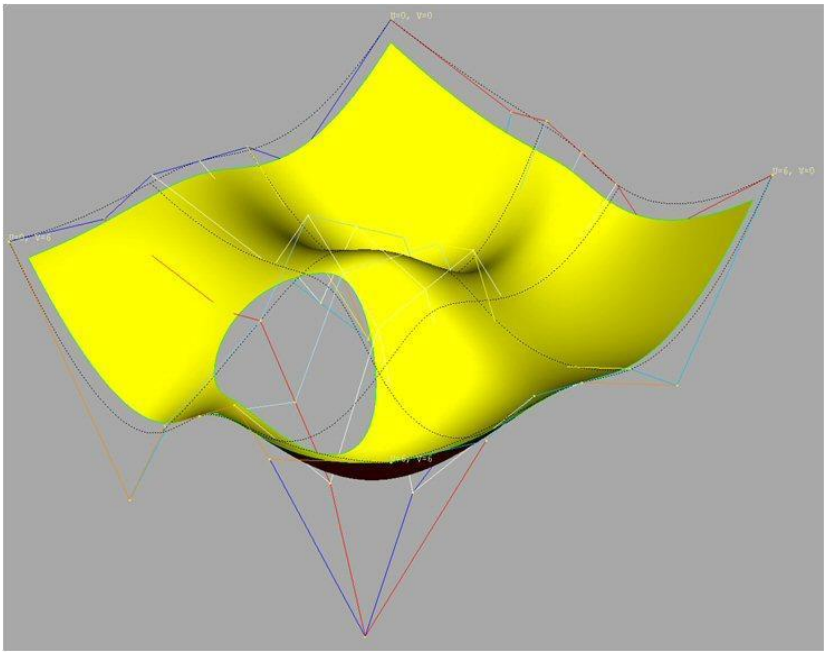

Source: https://assist.dla.mil -- Downloaded: 2017-01-09T06:14Z
Check the source to verify that this is the current version before use.

Figure 5. Image showing the control points corresponding to the Greville points in the figure above.

Surface Greville points that are outside the surface trimmed area should be excluded from the point sample unless all Greville points end up outside the surface trimmed area (an uncommon occurrence. In such cases at least one sample point must be generated within the trimmed surface area using another sampling technique.

It is not necessary to sample points on analytic surfaces such as planes, cylinders, ellipses, and conic sections. Where analytic surfaces intersect with NURBS surfaces, it sufficient to verify the position of the edge curves. When two analytic surfaces intersect, the actual position of the surfaces may be validated by comparing the parameters of the surfaces. For example, a plane surface may be described at a minimum by six real numbers: the origin (3 coordinates) and the unit normal vector at the origin (3 coordinates).

C.6.1.2.2. Allowable deviations.

The allowable deviation between sample points and the curves or surfaces on which they should lie is expressed as a tolerance ± 0.XXX units of measure. The tolerance used should be less than the manufacturing tolerances employed to make the part, but greater than the allowable edge-surface deviation of the target CAD system. The tolerance applicable to sand castings, sheet metal, or rubber parts is generally greater than the tolerance for precision milled parts.

In the absence of other information, contractors that employ the metric system may employ a tolerance of ± 0.01 mm. In English units, a tolerance of ± 0.0004 inches is common for precision machinery.

C.6.1.2.3. Reporting of deviations.

When sample points are used to confirm the geometric accuracy of surfaces following translation to another format, the number of points required to be examined is generally too large to allow this task to be performed interactively. Consequently, the evaluation of differences between the points and their corresponding surfaces should be performed by automated validation software.

The validation software should produce a report showing the distance between sample points and their boundary curves or surfaces. Points that fall outside of the allowable tolerances should be noted in the report. The form of the report may be graphic or tabular and shall be approved by the contracting officer prior to the submission of 3D models.

Source: https://assist.dla.mil -- Downloaded: 2017-01-09T06:14Z
Check the source to verify that this is the current version before use.

C.6.1.3. 3D annotations.

Annotations applied to 3D models shall conform to ANSI standards Y14.5M-2009 and Y14.41-2003. All 3D models, both native and equivalent, shall be checked for conformance to these standards. Conformance errors may consist of the following:

- Incorrect application of geometric characteristics to model features
- Incorrect use of base dimensions
- Inaccurate dimensions or dimensions not to scale
- Datum feature symbols missing or incorrectly applied
- Missing or incorrect use of symbols in tolerance blocks and dimensions
- Placement of annotations on incorrect planes or views
- Improper use of line types and arrowheads in leaders and dimensions
- Poor placement of dimensions (for example, dimensioning to the round edge of a hole)
- Dimension tolerances larger than dimension values
- Missing or partially missing annotations

In addition, models that have been translated from their native formats to another format must be checked to verify that:

- No annotations have been dropped, altered, or misplaced
- Links between the model annotations and geometry have not been broken
- View capture information remains consistent with the native model
- Annotations stored as graphics entities remain consistent with non-graphic attribute fields

Examples of annotation errors are shown in Exhibit F.

C.6.1.4. Model structure.

Good practices for 3D model structures can be divided into two broad classes: the relationship among features in an individual part model and the relationship among part models in an assembly. Individual part models may behave more predictably if there are fewer dependent relationships among part features. For example, good modeling practices would apply fillets or rounds last so that no other features are dependent upon them. Other model features should be defined on independent planes located at the root of the model tree instead of on surfaces of existing features.

Source: https://assist.dla.mil -- Downloaded: 2017-01-09T06:14Z
Check the source to verify that this is the current version before use.

Tools such as Parametric Technology Corporation's Model Check for Pro/Engineer or TDCi Limited's Prescient QA for CATIA V5 are examples of software that can automatically identify poor modeling practices in native models.

When model features are translated from one system to another, features must be checked to be sure they have mapped correctly from one system to another. This translation process may be called re-mastering and is discussed in the section "Re-mastering of 3D model data."

Errors that occur in native assembly models may include:

- Two functionally identical parts represented by two distinct product models
- Part models that are not associated with any assembly
- Part models dependent upon parts outside of their subassemblies

Errors that occur in translated equivalent models may include:

- Failure to map all parts from the native assembly to the equivalent
- Subassemblies incorrectly mapped to the equivalent system
- Subassembly hierarchy incorrectly mapped to the equivalent system.
- Position of parts in assemblies is altered.

C.6.1.5. Model attributes.

A variety of errors may occur in model attribute fields. These include:

- Incorrect data (typing the wrong value)
- Incorrect data types (such as text in numeric fields)
- Spelling errors

Of these errors, only data types and spelling errors are amenable to automated checking.

When attributes are translated from one system to another, automated checking software can be employed to assure that attributes are translated to the appropriate fields in the receiving system. Such checks can be automated. Implementation details may be dependent on the nature of the project.

C.6.1.6. Lifecycle data.

Lifecycle data are typically generated by and stored in a product data management (PDM) or product lifecycle management (PLM) system. When data are translated from one PDM system to another, they must be check to assure that values are mapped to the appropriate fields in the receiving system and values are not changed in the translation process.

Source: https://assist.dla.mil -- Downloaded: 2017-01-09T06:14Z
Check the source to verify that this is the current version before use.

C.6.2. Data checking processes and procedures.

The quality of 3D models should be checked whenever control of the models passes from their originating designer to other people or systems. It should also be noted that ideally the originator or the group who has the design authority over the models should perform these checks and then provide evidence of their completion. The reason for this is to expedite any changes that may be needed to satisfy the checking process. Events that trigger data quality checks may include the following:

- Check-in by the designer to a product data management (PDM) system
- Translation from one CAD system to another CAD, CAM, CAE system or visualization system
- Translation from a the proprietary format of a CAD system to an ISO or ANSI standard format
- Translation from an ISO or ANSI standard format to the proprietary format of a CAD system
- Translation from a CAD system to a long-term archival format
- Retrieval from a long-term archive
- Use in finite element analysis
- Generation of tool paths for numerically controlled manufacturing machines

To save both schedule time and engineering labor, data checking should be performed as part of an automated procedure approved by the contracting officer's technical representative. The procedure should define the following:

- Acceptable software products and releases to be used for checking 3D model quality
- Applicable product data quality criteria as defined in this guide
- Acceptable threshold values for product data quality (PDQ) criteria (Exhibit B contains recommended values.)
- Actions that trigger validation checks
- Procedures for recording quality defects found within models
- Recommendations and procedures for correcting models with quality errors

Source: https://assist.dla.mil -- Downloaded: 2017-01-09T06:14Z
Check the source to verify that this is the current version before use.

Many CAD systems now have capabilities for checking models in accordance with the recommendations of this handbook. Such tools may be acceptable for internal checking prior to model release.

When models are released for analysis, manufacturing, or archival storage, it is preferable to employ validation software from independent, third parties. Third-party software is more likely to identify objective model quality errors than software written by the people who programmed the CAD system that created the models.

Validation software may be operated in either interactive or automated modes. When used interactively, each 3D model is read, visually checked by the operator, and (if applicable) corrected or sent for correction. Automated systems read batches of 3D models, check them, and then create records indicating which, if any, defects are present. The records may be stored as non-graphic attributes of the 3D model files or as records of a PDM database.

In either interactive or automated mode, the process for checking 3D models proceeds as follows. First, the operator determines which quality criteria are to be checked and sets the appropriate threshold values in the software. The criteria definitions are in Exhibit A. Recommended threshold values are in Exhibit B.

Not all of the quality criteria listed in Exhibit A will be applicable to every data quality check. For example, if continuous curvature between curves, edges, or surfaces is not a requirement for the parts being checked, then these criteria should not be set. Likewise, for machinery parts, non-tangent surfaces may be acceptable or desirable. Threshold values may deviate from the recommendations of Exhibit B, if experience shows that higher thresholds avoid identification of defects that have no practical significance.

Next the software reads each unique part model, checks it for errors, and generates a report. If no defects are found, the model is ready for release. If defects are found, they may be corrected in one of two ways:

1. Models are returned to the person who generated them to be corrected either by re-translation with different parameter settings or by interactive modification in the originating CAD software.

2. Model defects are healed using automated interactive healing software.

The first case, return to sender, is appropriate when parametric model features must be preserved or when defects are of such a gross nature (such as large parts of the model missing) that healing software can’t cope with them. Examples of use cases that require return-to-sender corrections are shown in the diagrams below.

Source: https://assist.dla.mil -- Downloaded: 2017-01-09T06:14Z
Check the source to verify that this is the current version before use.

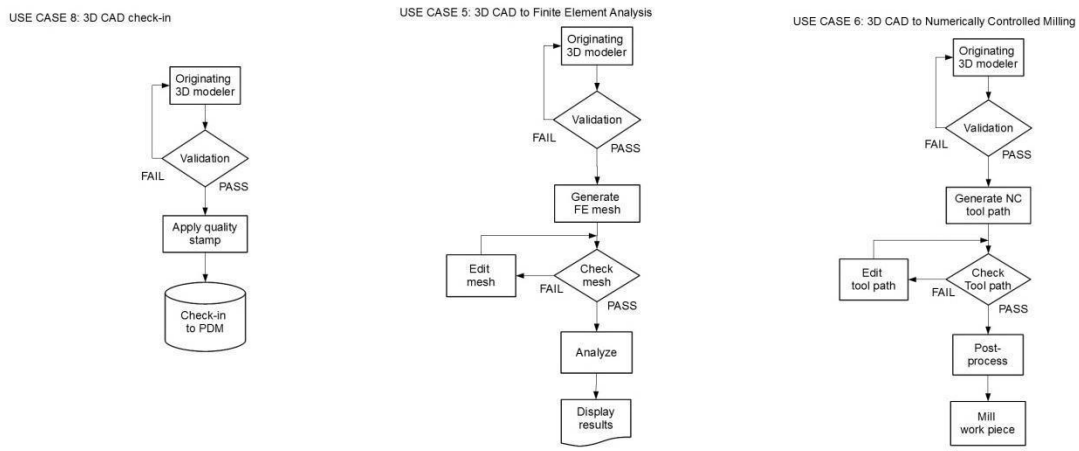

Figure 6. Check In.

Model healing is appropriate when preservation of parametric features is not required or appropriate, usually following translation from one 3D format to another. Examples of data checking software in use are shown in Exhibit C.

C.6.3. Model healing processes and procedures.

In general, 3D models should be free from defects before they are released for use by other people such as analysts, prototype fabricators, tool makers, or machinists. The best way to correct defects is in the CAD software that was used to make them. When models are translated from one CAD 3D format to another, feature information may be lost. In these cases, data healing software is used to correct minor geometric and topological defects resulting from errors in translation.

Healing software may be employed interactively or, when many models must be corrected, in a semi-automated batch process. In either case the same method is employed:

1. The healing software reads the 3D model.

2. Errors are identified and reported.

3. Automated healing procedures are applied and the model is checked again.

4. Operators interactively correct any remaining errors.

An example of healing software is shown in Exhibit D. Because error detection and identification must precede healing, it is often more efficient to perform data-quality checking and healing as part of a single process.

Source: https://assist.dla.mil -- Downloaded: 2017-01-09T06:14Z
Check the source to verify that this is the current version before use.

C.6.4. Conversion of 3D models from one format to another.

Product data quality is especially important when models are being translated from one format to another. Defects in geometry or topology of models may cause translation programs to fail. In some cases 3D models may not sew into valid solids in the receiving system. Faces or entire sections of models may be missing.

Fixing such errors after translation is time-consuming and expensive. It is more cost-effective to check models for defects before they are translated to other formats. The diagrams below illustrate several different processes that data conversion can take:

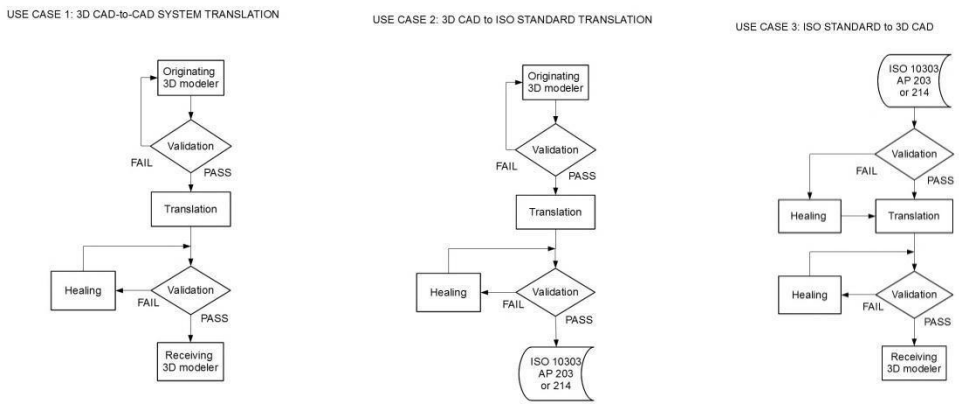

Figure 7. Model translation processes.

When the model source is a CAD system, the sender should correct errors in the CAD system. When the source is a standard format or long-term storage archive, data defects should be healed prior to translation. In all of the above cases, it is assumed that geometry and topology but not parametric features are translated between two systems. When a process requires that parametric features, assembly mates, and associative drawings also be translated, then the conversion process is commonly referred to as re-mastering, which is discussed in the next section.

C.6.5. Re-mastering of 3D model data.

Re-mastering is the process of recreating an intelligent model with parametric features in a CAD systems that is different from the one in which it originated. There are currently no fully automated conversion tools for re-mastering all classes of parametric feature-based 3D models. Simple parametric features such as blocks, grooves, and round holes can be translated automatically with high fidelity. But more sophisticated features, such as lofts, sweeps, blends, drafted faces, and fillets may be distorted or fail in translation. People can quickly recognize when such errors occur and make decisions about how to correct them. That's why feature-translation software relies on human intervention, which also is subject to human error.

Source: https://assist.dla.mil -- Downloaded: 2017-01-09T06:14Z
Check the source to verify that this is the current version before use.

There are multiple reasons that feature re-mastering can't be fully automated. First, CAD systems employ subtly different feature-creation algorithms to generate the same shape. For example, systems may represent the intersection of simple round fillets in different ways.

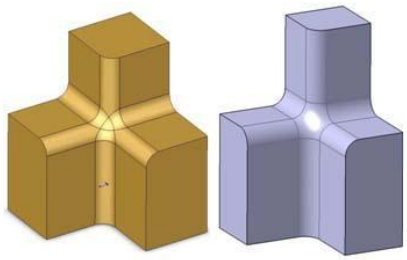

Figure 8. Example of two ways of representing the intersection of two round fillets.

In some cases features defined in one system don't exist in the target system. There may be other ways to create a similar shape, but computer programs aren't always capable of determining which of these many possibilities might work.

Because of the labor that re-mastering requires, it should be undertaken only when absolutely necessary. Do not re-master 3D models just in case you might need them. Re-master only if it is known that changes requiring parametric features in that particular model will be required. An example of a model that might be worth re-mastering would be a model of a tool, such as a mold base or fixture, used to make similar products whose shapes vary.

It is usually more economical to translate 3D master models as featureless solids, and re-master them later, if necessary. Be aware that modern CAD software is capable of making some changes to featureless models. For example holes can be relocated, resized, or plugged. Draft can be applied to surfaces. Ribs, bosses, and slots can be moved. These capabilities further reduce the need to fully re-master models.

Re-mastering can be accomplished by one of two processes. The first is for skilled CAD operators to manually recopy the original models into the target CAD systems. This process can provide the best quality models, but only if the technician doing the re-mastering understands the design intent and follows it. However, manual re-mastering is costly and often done poorly.

Semi-automated re-mastering is done with software capable of recognizing features in the source model and replicating them in the new master. After the new features are generated, the geometry of the new model is compared with the original. If the dimensions vary beyond allowable tolerances, the differences are noted and a human operator makes a decision about whether to translate the feature or translate only featureless geometry in the vicinity of the deviation. When all of the features that can be translated are complete, the model geometry is compared for accuracy and checked for quality defects.

Source: https://assist.dla.mil -- Downloaded: 2017-01-09T06:14Z
Check the source to verify that this is the current version before use.

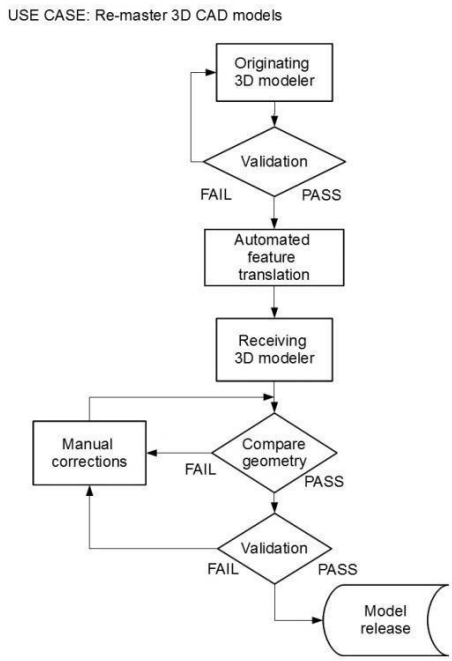

Figure 9. Re-mastering of feature-based 3D models

A special case of re-mastering may be used when assemblies are converted from one system to another. It is possible to translate individual parts as featureless solids, translate non-graphic attributes of each part, and assemble parts using assembly constraints. This type of re-mastering produces a robust model that can be used to create assembly animations, analytical models, and exploded-view drawings. This type of partial re-mastering is generally easier to automate than fully featured masters.

C.6.6. Long-term archiving of 3D model data.

Increasingly designers of military systems are employing 3D models as the masters for manufacturing. Standards such as ASME Y14.41-2003 *Digital Product Definition Data Practices* are defining conventions for applying critical dimensions and tolerances directly to 3D models. These practices are eliminating the need to generate fully dimensioned 2D drawings to manufacture products.

DoD systems are often characterized by long services lives. An extreme example is the M2 Browning .50 Caliber machine gun, which entered service in 1933 and remains in use today. The need to produce spare parts and additional complete units of weapons systems requires the DoD to have access to engineering documents that precisely define these systems. To assure that future spare parts or production runs are faithful to the original design, the DoD requires standards for acceptance of 3D master models that can serve as long-term engineering records.

The technical problem with retrieval of models that have been archived for long periods is that 3D CAD systems are continually evolving. Although CAD systems are supposed to be able to read

Source: https://assist.dla.mil -- Downloaded: 2017-01-09T06:14Z
Check the source to verify that this is the current version before use.

models created in prior revisions, experience has shown that information from older models may be lost or distorted when read by current versions. Consequently, procedures must be developed to assure that models read from long-term storage faithfully match the original models put into the archive. These validation procedures should be performed regardless of whether long-term archives are in the proprietary formats of their originating CAD systems or in industry-standard formats such as ISO 10303 parts 203 or 214.

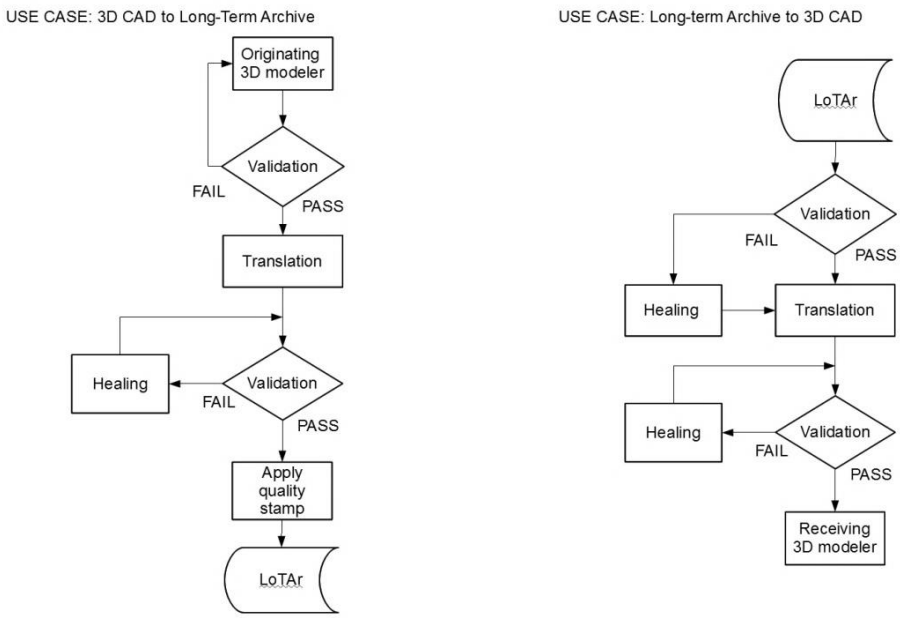

Figure 10. Translation to archival format.

Presently, standards for long-term archival storage of 3D models are being developed and tested by two European organizations:

the European Association of Aerospace Industries – Standardization (ASD-STAN)

the ProSTEP iViP Association

Three parts of the standard for LOng Term Archiving and Retrieval of digital technical product documentation (LOTAR) have been written and approved. Although these European standards are not binding upon the US Department of Defense, they represent the most thorough efforts to date to assure that 3D model-based designs that are stored for long periods are able to be read accurately by future systems. Therefore adherence to LOTAR conventions, when possible, is recommended.

Source: https://assist.dla.mil -- Downloaded: 2017-01-09T06:14Z
Check the source to verify that this is the current version before use.

C.7 EXHIBIT A – PRODUCT GEOMETRIC INTEGRITY CRITERIA.

C.7.1. Geometry.

C.7.1.1. Curve criteria Large segment gap (G_0 discontinuity) (G-CU-LG).

Definition: The distance between end points of adjacent curve or line segments is excessive. Curves may be separated by a gap or may overlap.
Measurement: gap width or overlap in mm

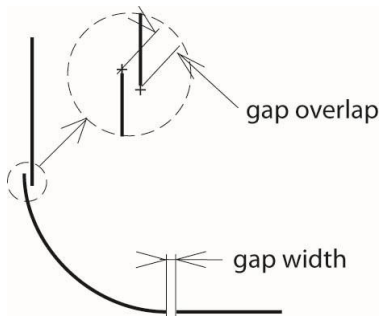

Effects of condition on CAD data quality:

Design or drafting: When curves are offset, gaps between segments may be enlarged or overlapping segments may intersect. Cross-sectional views may fail.

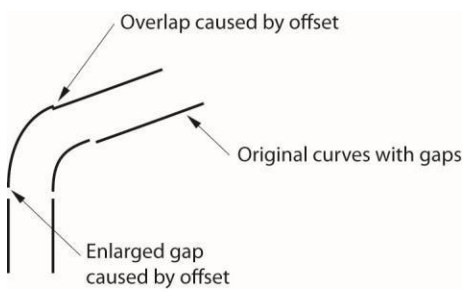

Data exchange: Faces associated with curves may not trim properly.

Finite element analysis: Unwanted mesh elements may be produced. Automatic mesh generation may fail.

Numerically controlled manufacturing: Gouges or abrupt changes in angle may occur when cutting curve surfaces.

Recommended correction: Limit the distance between end points to less than the recommended values. The preferred correction method is extending or trimming one or both entities.

C.7.1.2. Non-tangent curves or segments (G_1 discontinuity) (G-CU-NT).

Definition: Tangent angle changes at the common endpoint of adjacent curves, $\Delta\theta$ ($\leq 90°$).

Measurement: difference in tangent angle of two curves at common end point, $\Delta\theta$

Source: https://assist.dla.mil -- Downloaded: 2017-01-09T06:14Z
Check the source to verify that this is the current version before use.

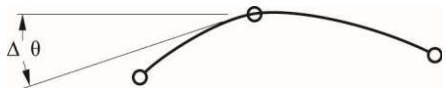

Effects of condition on CAD data quality:

Non-tangent curves and line segments are not necessarily indicative of poor data quality. In some cases, such as square corners, chamfered, and beveled edges, non-tangent conditions are intended. When curves are intended to be tangent, but aren't, then G_1 discontinuity is indicative of poor quality. Non-tangent conditions are usually visible to the unaided eye and can be felt by finger tips on physical models.

Design or drafting: A quality defect only when tangency is intended.

Data exchange: No harmful effects on data exchange.

Finite-element analysis: No harmful effects on mesh generation or model solution.

Numerically controlled manufacturing: Sharp edges should generally be avoided in manufacturing (razors and knives are exceptions). However, when making machined parts or parts fabricated from plate stock, removal of sharp edges may be covered by a general note or specification. In such cases, non-tangent curves would not be considered model quality defects. If tangency is intended between curves, non-tangent curves produce noticeable defects in finished products and should be considered model-quality defects.

Recommended correction: Adjust one or both entities to make them tangent.

Source: https://assist.dla.mil -- Downloaded: 2017-01-09T06:14Z
Check the source to verify that this is the current version before use.

C.7.1.3. Non-smooth curves or segments (G_2 discontinuity) (G-CU-NS).

Definition: Radius of curvature changes at the common end point of two curves or a curve and a line segment.

Measurement: ratio of the difference in radius of curvature over mean radius, |r1-r2|/(r1+r2)/2

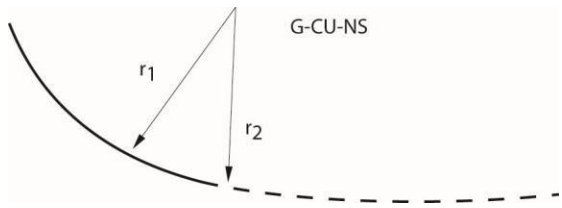

Discontinuous curvature is a quality defect only if adjacent curves are required by designers to have continuous curvature.

Design or drafting: A quality defect only when curvature continuity is required.

Data exchange: No harmful effects on data exchange.

Finite-element analysis: No harmful effects on mesh generation or model solution.

Numerically controlled manufacturing: Curvature discontinuity is visible in finished parts. No effect on machining operations.

Recommended correction: Adjust one or both entities to eliminate the unwanted condition.

C.7.1.4. Tiny Curve or segment (G-CU-TI).

Definition: Curve or arc length is smaller than permissible minimum.

Measurement: segment length or arc length in mm.

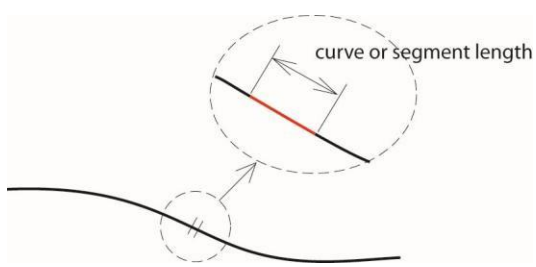

Source: https://assist.dla.mil -- Downloaded: 2017-01-09T06:14Z
Check the source to verify that this is the current version before use.

Effects of condition on CAD data quality:

Design or drafting: Cross sectional views may fail. Use of the small entity in a swept or lofted surface may produce tiny surfaces (G-SU-TI). Slight increase in model storage requirements due to unnecessary entities.

Data exchange: Gaps or degenerate entities may be produced during data translation due to differences in tolerances between CAD systems. Faces may not trim properly.

Finite element analysis: Unwanted mesh elements may be produced. Automatic mesh generation may fail.

Numerically controlled manufacturing: May slow operation.

Recommended correction: Remove the tiny entity and extend or trim one or both entities to eliminate the gap.

C.7.1.5. Indistinct curve knots (G-CU-IK).

Definition: Two or more knot points on a spline curve positioned too close to each other.

Measurement: distance between knot points, Δt

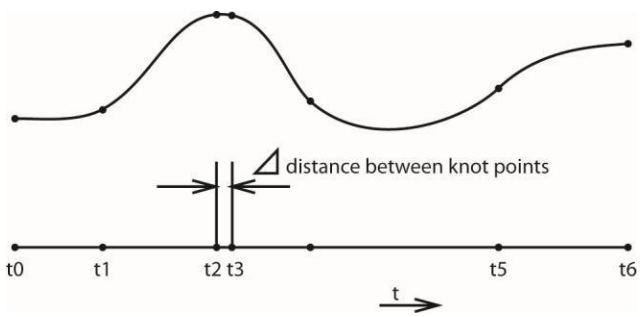

Effects of condition on CAD data quality:

Design and drafting: May cause an abrupt change in curvature.

Data exchange: Differences in mathematical tolerances between systems may cause the number of segments in the spline to be reduced upon translation. May cause trimming problems with faces.

Finite element analysis: May cause excessively fine mesh element to be generated.

Numerically controlled manufacturing: May cause tool path generation to fail.

Recommended correction: Remove one of the knot points. If the CAD software does not permit knot removal, recreate the spline with the proper number of knots.

Source: https://assist.dla.mil -- Downloaded: 2017-01-09T06:14Z
Check the source to verify that this is the current version before use.

C.7.1.6. Self-Intersecting curve (G-CU-IS).

Definition: A curve intersects itself at one or more locations. Self-intersections are usually caused by errors in creating offset curves. Within threshold value, the logical value is true if there is no intersection.

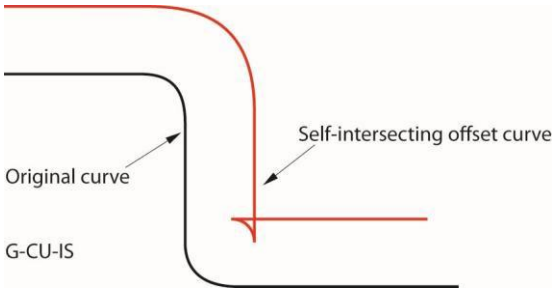

Effects of condition on CAD data quality:

Design and drafting: Errors may occur if the curve is used to create swept or lofted surfaces or other offset curves. Solid features may fail unexpectedly.

Data exchange: May cause trimming problems with faces.

Finite element analysis: Automatic mesh generation may fail. Excessively fine local mesh may be generated.

Numerically controlled manufacturing: Gouging and other unsatisfactory cuts may occur.

Recommended correction: Recreate the offset curve in a way that does not produce a self-intersection. Trim the self-intersecting portion of the curve.

C.7.1.7. Embedded curves (G-CU-EM).

Description: A set of overlapping curves of any type. Embedded curves may be cause by CAD operator error (such as inserting the same curve twice) or by copying geometry from another source into the model. Within precision of 0.01 mm, the logical value is true if there is no embedded curve.

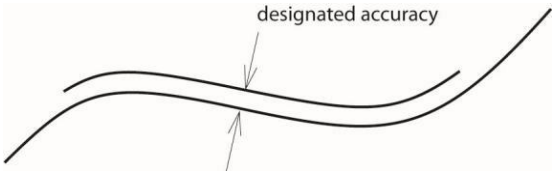

Effects of condition on CAD data quality:

Design and drafting: Profiles containing embedded curves may cause features to fail. Errors may occur when selecting curves.

Data exchange: May cause trimming problems with faces.

Source: https://assist.dla.mil -- Downloaded: 2017-01-09T06:14Z
Check the source to verify that this is the current version before use.

Finite element analysis: Automatic mesh generation may fail because software can't recognize curves with embedded curves as continuous

Numerically controlled manufacturing: Tool path generation may fail because software can't recognize continuous curves.

Recommended correction: Delete one of the double elements with the fewest dependent relationships. Reassign relationships, if any, to the remaining curve.

C.7.1.8. Excessively high-degree Curve (G-CU-HD).

Definition: Polynomial curve is of excessively high degree, integer value n.

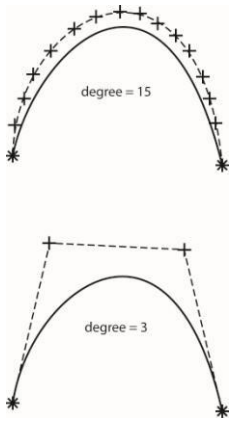

Effects of condition on CAD data quality:

Design and drafting: High-degree curves are susceptible to unwanted undulations and unpredictable behavior when small changes are made.

Data exchange: The receiving system may be incapable of interpreting the high degree curves. Translators may fragment the curve into multiple tiny or discontinuous segments.

Finite element analysis: Automatic mesh generation may fail because software can't recognize high degree curves. Discontinuous segments may produce excessively fine mesh elements.

Numerically controlled manufacturing: Tool path generation may fail because software can't recognize high-degree continuous curves. Unwanted undulations may occur in the finished work piece.

Recommended correction: Avoid using polynomial curves of high degree. Subdivide high-degree curves into sets of adjacent curves with lower degree.

C.7.1.9. Fragmented curve (G-CU-FG).

Definition: The curve contains too many segments, integer value N. This condition may be caused by data translation that approximates a higher degree curve with a set of lower-degree curves.

Source: https://assist.dla.mil -- Downloaded: 2017-01-09T06:14Z
Check the source to verify that this is the current version before use.

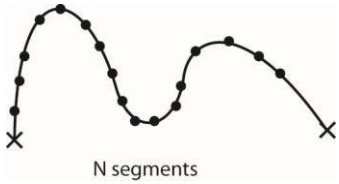

Effects of condition on CAD data quality:

Design and drafting: Fragmented curves increase model size and are hard to control.

Data exchange: The receiving system may be incapable of accepting the large number of segments.

Finite element analysis: Large numbers of segments may produce excessively fine mesh elements.

Numerically controlled manufacturing: Increases model size unnecessarily.

Recommended correction: Replace the fragmented curve with one that consists of fewer segments.

C.7.1.10. Wavy planar curve (G-CU-WV).

Definition: Curvature changes direction excessively. Number of changes in curvature sign = N. The condition may occur in planar or three-dimensional curves.

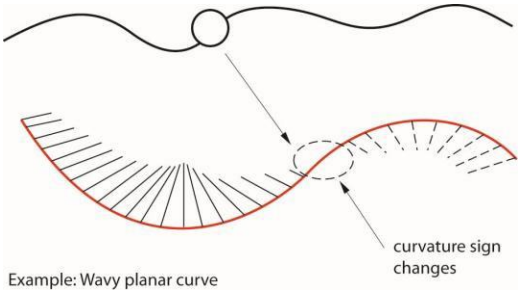

Effects of condition on CAD data quality:

Design and drafting: Undesirable appearance for most defense applications.

Data exchange: No impact on data exchange.

Finite element analysis: Undulations may produce excessive numbers of elements.

Numerically controlled manufacturing: Undulations appear in the work piece.

Recommended correction: Replace the wavy curve with one that has fewer undulations.

Source: https://assist.dla.mil -- Downloaded: 2017-01-09T06:14Z
Check the source to verify that this is the current version before use.

C.7.1.11. Small radius of curvature (G-CU-CR).

Definition: Radius of curvature is below acceptable limits.

Effects of condition on CAD data quality:

Design and drafting: Except for certain applications (such as sheet-metal hems), small radii of curvature are undesirable. Self-intersecting curves may be created when offset curves are produced. Fillets and rounds may fail.

Data exchange: faces may not trim properly.

Finite element analysis: Small radii produce excessive numbers of elements.

Numerically controlled manufacturing: Small tools are required to mill small radii.

Recommended correction: Replace curve segments that have less than the minimum acceptable radius.

C.7.2. Surface criteria.

C.7.2.1. Large gap between surfaces or patches (G_0 discontinuity) (G-SU-LG).

Definition: Excessive distance between the common boundary between surfaces or patches

Measurement: gap width in mm

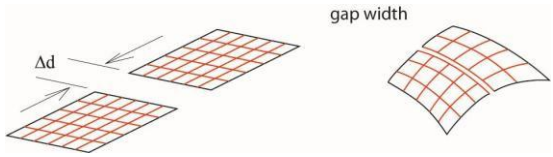

Effects of condition on CAD data quality:

Design and drafting: Surfaces may not combine to produce a solid model

Data exchange: faces may not trim properly.

Finite element analysis: Mesh algorithms may fail or produce excessive numbers of elements.

Numerically controlled manufacturing: Tool path software may fail. Tool paths may gouge the work piece.

Recommended correction: Extend and trim one or both surfaces to reduce the maximum gap width.

Source: https://assist.dla.mil -- Downloaded: 2017-01-09T06:14Z
Check the source to verify that this is the current version before use.

C.7.2.2. Non-tangent surfaces or patches (G_1 discontinuity) (G-SU-NT).

Definition: Tangent angle changes at the common boundary between adjacent surfaces or patches.

Measurement: angle between normal vectors at the common boundary, $\Delta\theta$.

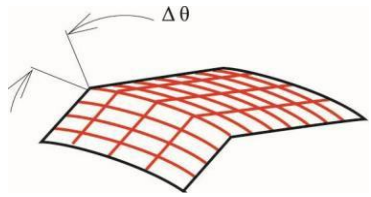

Effects of condition on CAD data quality:

Non-tangent surfaces or patches are not necessarily indicative of poor data quality. In some cases, such as square corners, chamfered, and beveled edges, non-tangent conditions are intended. When curves are intended to be tangent, but aren't, then G_1 discontinuity is indicative or poor quality. Non-tangent conditions are usually visible to the unaided eye and can be felt by finger tips on physical models.

Design or drafting: A quality defect only when tangency is intended.

Data exchange: No harmful effects on data exchange.

Finite-element analysis: No harmful effects on mesh generation or model solution.

Numerically controlled manufacturing: Sharp edges should generally be avoided in manufacturing. However, when making machine parts, removal of sharp edges may be covered by a general note or specification. When tangency is intended between surfaces, non-tangent surfaces produce noticeable defects in finished products.

Recommended correction: CAD operator must adjust one or both surfaces to eliminate the unwanted condition.

Source: https://assist.dla.mil -- Downloaded: 2017-01-09T06:14Z
Check the source to verify that this is the current version before use.

C.7.2.3. Non-smooth surfaces or patches (G_2 discontinuity) (G-SU-NS).

Definition: Radius of curvature changes abruptly in magnitude at the common boundary of two surfaces or patches.

Measurement: ratio of the difference in radius of curvature over mean radius, |r1-r2|/(r1+r2)/2

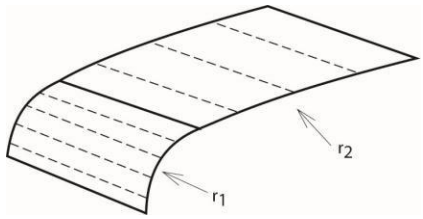

Discontinuous curvature is a quality defect only if adjacent surfaces are required by designers to have continuous curvature.

Design or drafting: A quality defect only when curvature continuity is required.

Data exchange: No harmful effects on data exchange.

Finite-element analysis: No harmful effects on mesh generation or model solution.

Numerically controlled manufacturing: Curvature discontinuity is visible in finished parts. No effect on machining operations.

Recommended correction: Adjust one or both surfaces to eliminate the unwanted condition.

C.7.2.4. Tiny surface or patch (G-SU-TI).

Definition: Area of surface or patch is below permissible minimum.

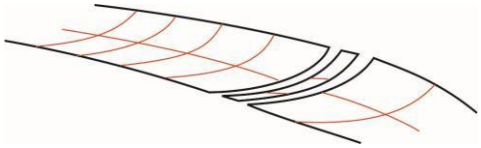

Effects of condition on CAD data quality:

Design or drafting: Cross sectional views, fillets, rounds, and offset surfaces may fail. Slight increase in model storage requirements due to unnecessary entities.

Data exchange: Faces may not trim properly.

Finite element analysis: Unwanted mesh elements may be produced. Automatic mesh generation may fail.

Numerically controlled manufacturing: May slow operations. Tool-path generation may fail.

Source: https://assist.dla.mil -- Downloaded: 2017-01-09T06:14Z
Check the source to verify that this is the current version before use.

Recommended correction: Remove the tiny entity and extend or trim one or both adjacent surfaces to eliminate the gap.

C.7.2.5. Narrow surface or patch (G-SU-NA).

Definition: Width of surface or patch, L, is below permissible minimum in any direction.

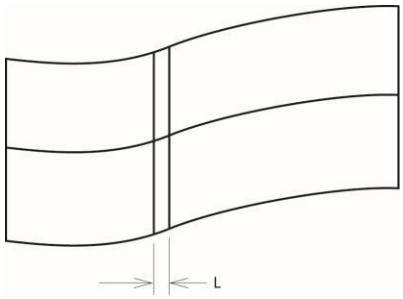

Effects of condition on CAD data quality:

Design or drafting: Cross sectional views, fillets, rounds, and offset surfaces may fail. Slight increase in model storage requirements due to unnecessary entities.

Data exchange: Faces may not trim properly.

Finite element analysis: Unwanted mesh elements may be produced. Automatic mesh generation may fail.

Numerically controlled manufacturing: May slow operations. Tool-path generation may fail.

Recommended correction: Remove the narrow surface and extend or trim one or both adjacent surfaces to eliminate the gap.

C.7.2.6. Relatively narrow neighboring patches (G-SU-RN).

Definition: Ratio of width of surface or patch compared with adjacent patches, r, is below permissible minimum even though the absolute patch dimensions exceed allowable minimums.

Measurement: r = width(patch 2)/width(patch 1), $r \leq 1.0$

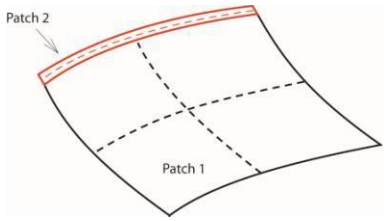

Effects of condition on CAD data quality:

Design or drafting: Indicative of poor surface partitioning. Problems modifying surfaces may occur.

Source: https://assist.dla.mil -- Downloaded: 2017-01-09T06:14Z
Check the source to verify that this is the current version before use.

Data exchange: No impact on data exchange

Finite element analysis: Unwanted mesh elements may be produced, extending solutions times.

Numerically controlled manufacturing: No impact

Recommended correction: Remove the relatively narrow surface and extend or trim one or both adjacent surfaces to close the gap.

C.7.2.7. Degenerate surface boundary (G-SU-DC).

Definition: Length of the edge of one surface or patch boundary, L, is below permissible minimum. Some CAD systems define a triangular surface by setting one boundary below a specified limit.

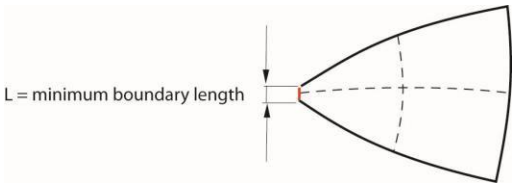

Effects of condition on CAD data quality:

Design or drafting: No impact if system supports triangular patches. May produce an undefined normal vector in some systems inhibiting offset surfaces, cross sections, fillets, and rounds.

Data exchange: Faces may not trim properly.

Finite element analysis: Degenerate mesh elements may be produced. Automatic mesh generation may fail.

Numerically controlled milling: Tool paths may converge on degenerate edge, producing unsatisfactory results.

Recommended correction: If CAD system does not support three-sided surfaces, create an oversized four-sided surface and trim back to three sides.

Source: https://assist.dla.mil -- Downloaded: 2017-01-09T06:14Z
Check the source to verify that this is the current version before use.

C.7.2.8. Degenerate surface corner (G-SU-DP).

Definition: One or more corners of a surface meet at a sharp or tangent angle below acceptable minimums.

Measurement: angle between tangents of adjacent surface boundaries at the common endpoint, $\Delta\theta$

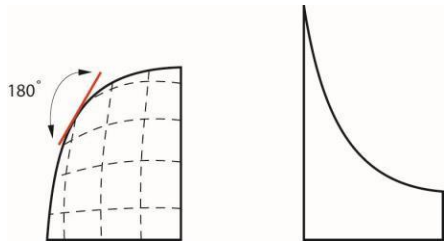

Effects of condition on CAD data quality:

Design or drafting: May be acceptable if normal vectors at the surface corners are well defined. Undefined normal vectors may inhibit cross sections, offset surfaces, fillets, and rounds.

Data exchange: Faces may not trim properly.

Finite element analysis: Degenerate mesh elements may be produced. Automatic mesh generation may fail.

Numerically controlled milling: Tool paths may converge on degenerate corner, producing unsatisfactory results.

Recommended correction: Divide the surface into three or create an oversized surface and trim to the required dimensions.

C.7.2.9. Indistinct surface knots (G-SU-IK).

Definition: Two or more knot points on a spline curve positioned too close to each other.

Measurement: distance between knot points, Δu and Δv

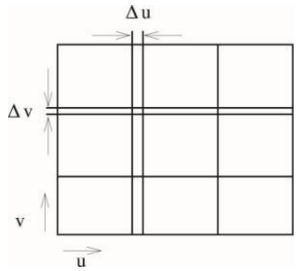

Effects of condition on CAD data quality:

Design and drafting: Cross-sections, offset surfaces, fillets, and rounds may fail.

Source: https://assist.dla.mil -- Downloaded: 2017-01-09T06:14Z
Check the source to verify that this is the current version before use.

Data exchange: May cause trimming problems with faces.

Finite element analysis: May cause excessively fine mesh element to be generated.

Numerically controlled manufacturing: May cause tool path generation to fail.

Recommended correction: Remove the redundant knot points if possible. If the CAD software does not permit knot removal, recreate the surface with the proper number of knots.

C.7.2.10. Self-intersecting surface (G-SU-IS).

Definition: A surface or patch intersects itself at one or more locations. Within the threshold value, the logical value is true if there is no intersection.

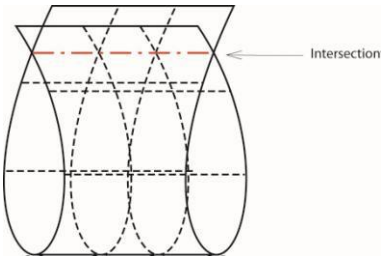

Effects of condition on CAD data quality:

Design and drafting: Solid models with self-intersecting surfaces may fail unexpectedly.

Data exchange: May cause trimming problems with faces, failure of solid models to sew.

Finite element analysis: Automatic mesh generation may fail.

Numerically controlled manufacturing: Gouging and other unsatisfactory cuts may occur.

Recommended correction: Remove the self-intersecting surface and recreate it in a way that does not produce a self-intersection. This process may require replacing self-intersecting curves that define the surface. Trim the self-intersecting portion to the curve of intersection.

Source: https://assist.dla.mil -- Downloaded: 2017-01-09T06:14Z
Check the source to verify that this is the current version before use.

C.7.2.11. Embedded surfaces (G-SU-EM).

Description: A set of completely overlapping surfaces of any type. Within precision of 0.01 mm, the logical value is true if there is no embedded surface.

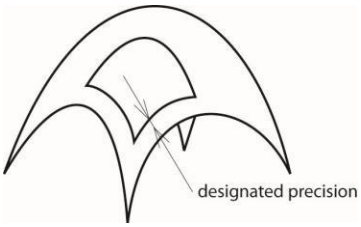

Effects of condition on CAD data quality:

Design and drafting: Errors may occur when selecting surfaces. Solid model topology may fail. Redundant surfaces consume excess storage.

Data exchange: Solid models may fail to sew after translation.

Finite element analysis: Gaps may occur between mesh elements

Numerically controlled manufacturing: Tool-path generation algorithms may produce excessive or insufficient cuts.

Recommended correction: Delete the redundant embedded surface.

C.7.2.12. Excessively high-degree surface (G-SU-HD)

Definition: Polynomial surface is of excessively high degree.

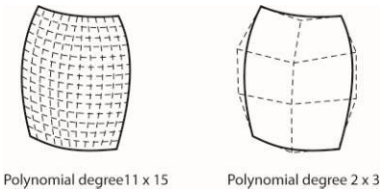

Effects of condition on CAD data quality:

Design and drafting: High-degree surfaces are susceptible to unwanted undulations and unpredictable behavior when small changes are made.

Data exchange: The receiving system may be incapable of interpreting the high degree surfaces. Translators may fragment the surfaces (G-SU-FG).

Finite element analysis: Automatic mesh generation may fail because software can’t recognize high degree surfaces. Fragmented surfaces may produce excessively fine mesh elements.

Source: https://assist.dla.mil -- Downloaded: 2017-01-09T06:14Z
Check the source to verify that this is the current version before use.

Numerically controlled manufacturing: Tool path generation may fail because software can't recognize high-degree surfaces curves. Unwanted undulations may occur in the finished work piece.

Recommended correction: Avoid using polynomial surfaces of high degree. Subdivide high-degree surfaces into sets of adjacent surfaces with lower degree.

C.7.2.13. Fragmented surface (G-SU-FG).

Definition: Number of patches in the surfaces, N, exceeds recommended value. The condition may be caused by translation processes that approximate high-degree polynomial surfaces with surfaces of lower degree or by the merging of surface elements with varying segmentation.

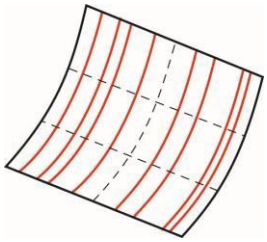

Effects of condition on CAD data quality:

Design and drafting: An excessive high patch count indicates that the surface definition is too complex. Fragmented surfaces are hard to modify.

Data exchange: The receiving system may be incapable of accepting surfaces with excessive numbers of patches.

Finite element analysis: Automatic mesh generation may fail because software can't cope with high patch counts. Fragmented surfaces may produce excessively fine mesh elements.

Numerically controlled milling: Tool path generation may fail because software can't handle high patch counts. Tool-path software may run too slowly.

Recommended correction: Avoid creating surfaces with high patch counts. Divide fragmented surfaces into sets of adjacent surfaces with fewer patches in each.

Source: https://assist.dla.mil -- Downloaded: 2017-01-09T06:14Z
Check the source to verify that this is the current version before use.

C.7.2.14. Unused patches (G-SU-UN).

Definition: Surface entity contains patches that are not used in any face of a solid. Unused patches are generally produced when the bounded face of a solid is much smaller than the surface defining the face.

Measurement: N = number of unused patches

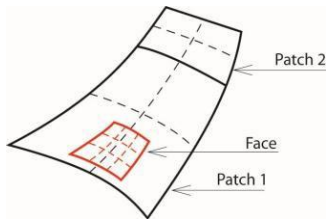

Figure 11-Example of an unused patch (in this case, patch 2)

Effects of condition on CAD data quality:

Design and drafting: Unused patches unnecessarily increase model size and may cause unpredictable errors.

Data exchange: The receiving system may be confused by unused patches.

Finite element analysis: Unwanted elements may be generated.

Numerically controlled manufacturing: Unwanted tool motion may be produced.

Recommended correction: Divide the face surface along a patch border and delete the surface that is not part of the patch.

C.7.2.15. Folded surface (G-SU-FO).

Definition: The maximum angle between pairs of normal vectors, θ, in either parametric direction of a patch or surfaces exceeds the allowable limit. Generally normal vectors of a surface uniformly face in nearly the same direction, either into the solid or out of it.

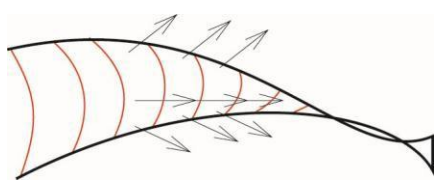

Effects of condition on CAD data quality:

Design and drafting: Offsetting of surfaces may fail. Models may become unstable.

Data exchange: Solids may fail to sew. Face boundaries may have inverted normal vectors.

Source: https://assist.dla.mil -- Downloaded: 2017-01-09T06:14Z
Check the source to verify that this is the current version before use.

Finite element analysis: Excessive numbers of small elements may be generated. Mesh generation may fail.

Numerically controlled manufacturing: Offset surfaces and tool-path generation may fail. Gouging of the work piece may occur.

Recommended correction: Defective surfaces should be deleted and recreated with properly oriented normal vectors. Where folding occurs at the tip of a triangular patch, trim the triangular patch and substitute a proper three-sided patch or surface.

C.7.2.16. Wavy surface (G-SU-WV).

Definition: Curvature of the surface changes sign too many times. Number of changes in curvature sign = N.

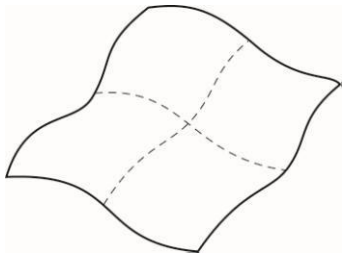

Effects of condition on CAD data quality:

Design and drafting: Aesthetically unacceptable in most cases.

Data exchange: Waviness may be accentuated upon translation. Waviness may be an artifact of poor translation.

Finite element analysis: Excessive numbers of small elements may be generated.

Numerically controlled manufacturing: Waviness will appear in the work piece.

Recommended correction: Delete the surface and recreate it using suitable degree, edge curves, knots, and control points.

C.7.2.17. Small Surface Radius of Curvature (G-SU-CR).

Definition: Radius of curvature, R, within the surface is below the minimum allowable value.

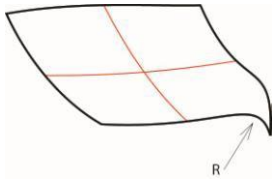

Source: https://assist.dla.mil -- Downloaded: 2017-01-09T06:14Z
Check the source to verify that this is the current version before use.

Effects of condition on CAD data quality:

Design and drafting: Fillets, rounds, surface offsets, projections, and cross sections may fail.

Data exchange: Face-trimming errors may occur.

Finite element analysis: Excessive small elements may be generated.

Numerically controlled manufacturing: Tool paths may fail. Excessively small tools are required to mill surfaces.

Recommended correction: Replace the defective surface with one of appropriate curvature radius.

C.7.3. Edge criteria.

C.7.3.1. Tiny edge (G-ED-TI).

Definition: Length of an edge curve or line segment falls below acceptable minimum.

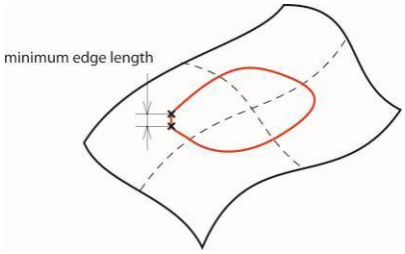

Effects of condition on CAD data quality:

Design and drafting: Solid entities, offset entities, fillets, rounds, and cross sections may fail. Use of the tiny edge in a sweep may produce a narrow patch or surface.

Data exchange: Topological information may be lost due to differences in tolerances between systems. Solid entities may fail. Only untrimmed entities may be translated.

Finite element analysis: Excessive small elements may be generated.

Numerically controlled manufacturing: Tool paths may fail.

Recommended correction: Delete the tiny edge curve and extend or trim adjacent curves to close the edge loop.

Source: https://assist.dla.mil -- Downloaded: 2017-01-09T06:14Z
Check the source to verify that this is the current version before use.

C.7.3.2. Fragmented Edge (G-ED-FG).

Definition: The number of segments in an edge curve exceeds the allowable maximum.

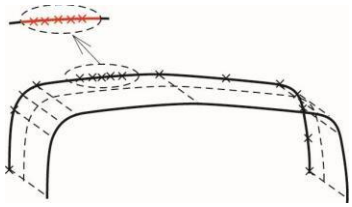

Effects of condition on CAD data quality:

Design and drafting: Tiny or discontinuous surface entities may be created. May impede changing geometry.

Data exchange: Applications with restrictions on the number of segments may not be able to process data.

Finite element analysis: Excessive small elements may be generated.

Numerically controlled manufacturing: Tool paths may fail. Poor surface quality may be apparent in work pieces.

Recommended correction: Approximate the fragmented edge within acceptable tolerances by a curve with fewer segments. Delete the fragmented edge.

C.7.3.3. Inconsistent edge on curve (G-ED-IO).

Definition: The direction of an edge curve in parameter space is inconsistent with its underlying curve in 3D space. The criterion is true if the directions are consistent.

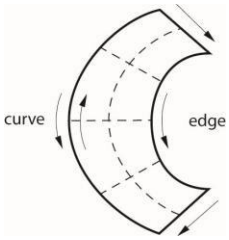

Effects of condition on CAD data quality:

Design and drafting: No effect on quality.

Data exchange: Faces may not trim properly following translation.

Finite element analysis: No effect on FE applications.

Numerically controlled manufacturing: No effect.

Source: https://assist.dla.mil -- Downloaded: 2017-01-09T06:14Z
Check the source to verify that this is the current version before use.

Recommended correction: Reverse the direction of the 3D curve if necessary.

C.7.4. Edge loop criteria.

C.7.4.1. Large edge gap (G-LO-LG).

Definition: Distance between end points of adjacent edges is excessive (G_0 discontinuity). Curves may be separated by a gap or may overlap.

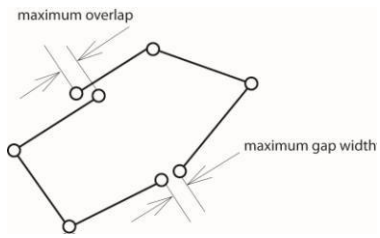

Effects of condition on CAD data quality:

Design or drafting: When edges are offset, gaps between segments may be enlarged or overlapping segments may intersect.

Data exchange: Faces associated with edges may not trim properly.

Finite element analysis: Unwanted mesh elements may be produced. Automatic mesh generation may fail.

Numerically controlled manufacturing: Gouges or abrupt changes in angle may occur when cutting curve surfaces.

Recommended correction: Redefine the end points to reduce the gap to less than the recommended values.

C.7.4.2. Non-tangent edges (G-LO-NT).

Definition: Tangent angle changes at the common endpoint of adjacent edges, $\Delta\theta$ ($\leq 90°$) (G1 discontinuity).

Effects of condition on CAD data quality:

Non-tangent curves and line segments are not necessarily indicative of poor data quality. In some cases, such as square corners, chamfered, and beveled edges, non-tangent conditions are intended. When curves are intended to be tangent, but aren't, then G1 discontinuity is indicative or poor quality. Non-tangent conditions are usually visible to the unaided eye and can be felt by finger tips on physical models.

Source: https://assist.dla.mil -- Downloaded: 2017-01-09T06:14Z
Check the source to verify that this is the current version before use.

Design or drafting: A quality defect only when tangency is intended.

Data exchange: No harmful effects on data exchange.

Finite-element analysis: No harmful effects on mesh generation or model solution.

Numerically controlled manufacturing: Sharp edges should generally be avoided in manufacturing. However, when making machine parts, removal of sharp edges may be covered by a general note or specification. When tangency is intended between edges, non-tangent curves produce noticeable defects in finished products.

Recommended correction: Adjust one or both entities to eliminate the unwanted condition.

C.7.4.3. Non-smooth edges (G-LO-NS).

Definition: Radius of curvature changes at the common end point of two edge segments.

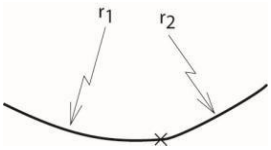

Discontinuous curvature is a quality defect only if adjacent edge segments are required to have continuous curvature.

Design or drafting: A quality defect only when curvature continuity is required.

Data exchange: No harmful effects on data exchange.

Finite-element analysis: No harmful effects on mesh generation or model solution.

Numerically controlled manufacturing: Curvature discontinuity is visible in finished parts. No effect on machining operations.

Recommended correction: Adjust one or both entities to eliminate the unwanted condition.

Source: https://assist.dla.mil -- Downloaded: 2017-01-09T06:14Z
Check the source to verify that this is the current version before use.

C.7.4.4. Self-intersecting loop (G-LO-IS).

Definition: An edge loop intersects itself at one or more locations. Self-intersections may be caused by errors in creating offset entities. Criterion is true if edge loops do not intersect themselves.

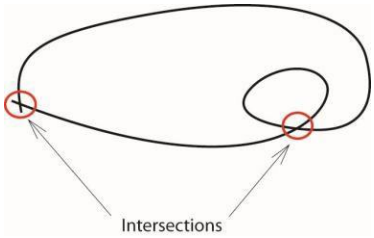

Effects of condition on CAD data quality:

Design and drafting: Errors may occur when projecting cross-sections of offset entities. Solid features may fail unexpectedly.

Data exchange: May cause trimming problems with faces.

Finite element analysis: Automatic mesh generation may fail. Excessively fine local mesh may be generated.

Numerically controlled manufacturing: Gouging and other unsatisfactory cuts may occur.

Recommended correction: Recreate the offset edge loop in a way that does not produce a self-intersection. Trim the self-intersecting portion of the curve.

C.7.4.5. Sharp Edge Angle (G-LO-SA).

Definition: Segments in an edge loop meet at angles below the recommended minimum.

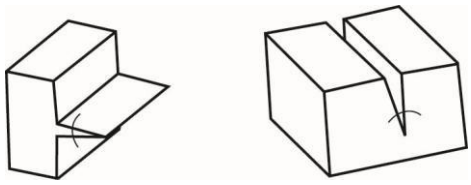

Effects of condition on CAD data quality:

Design and drafting: Sharp edges are generally undesirable in products, with the exception of cutting tools or weapons. Sharp edges are prone to breakage. Sharp notches may promote cracking or fatigue failure.

Data exchange: No problems with data exchange.

Finite element analysis: Excessively fine local mesh may be generated.

Source: https://assist.dla.mil -- Downloaded: 2017-01-09T06:14Z
Check the source to verify that this is the current version before use.

Numerically controlled manufacturing: Sharp edges are prone to breakage. Sharp notches may promote cracking during manufacture.

Recommended correction: Unless the design intent requires sharp edges, revised the edge loop to eliminate them.

C.7.4.6. Inconsistent edge in loop (G-LO-IT).

Definition: The direction of an edge loop in parameter space is inconsistent with its underlying boundary curve. The criterion is true if the directions are consistent.

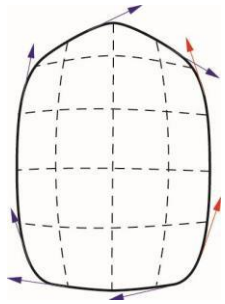

Effects of condition on CAD data quality:

Design and drafting: No effect on quality.

Data exchange: Unwanted self-penetration and face degeneration may occur. Faces may not trim properly following translation.

Finite element analysis: No effect on FE applications.

Numerically controlled manufacturing: No effect.

Recommended correction: Reverse the edge direction if necessary.

C.7.5. Face criteria.

C.7.5.1. Large edge face gap (G-FA-EG).

Definition: The distance between any point on an edge and the closest point on the base surface exceeds the allowable maximum.

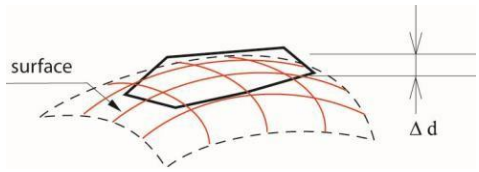

Source: https://assist.dla.mil -- Downloaded: 2017-01-09T06:14Z
Check the source to verify that this is the current version before use.

Effects of condition on CAD data quality:

Design and drafting: Errors may occur when generating projections, offsets, cross sections, fillets, rounds, and other geometric features. Models may fail unexpectedly.

Data exchange: Faces may not trim properly. Models may fail to sew into solids after translation.

Finite element analysis: Mesh generation may fail. Mesh quality may suffer from excessive numbers of elements or distorted elements.

Numerically controlled manufacturing: Errors in tool paths may occur. Solid models may not sew properly upon import.

Recommended correction: Assure that correct tolerances are maintained during translation. Adjust tolerances of CAD system (if possible) to maintain allowable tolerances. Revise curves to reduce gap size to allowable maximum.

C.7.5.2. Large vertex gap (G-FA-VF).

Definition: The distance between a vertex and the corresponding edge end point or face that it trims exceeds the allowable maximum.

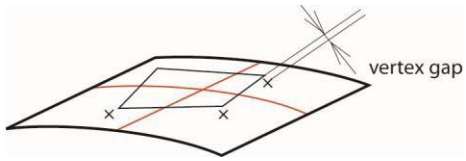

Effects of condition on CAD data quality:

Design and drafting: Errors may occur when generating projections, offsets, cross sections, fillets, rounds, and other geometric features. Models may fail unexpectedly.

Data exchange: Faces may not trim properly. Models may fail to sew into solids after translation.

Finite element analysis: Mesh generation may fail. Mesh quality may suffer from excessive numbers of elements or distorted elements.

Numerically controlled manufacturing: Errors in tool paths may occur. Solid models may not sew properly upon import.

Recommended correction: Assure that correct tolerances are maintained during translation. Adjust tolerances of CAD system (if possible) to maintain allowable tolerances. Project the vertex point on to the curve.

Source: https://assist.dla.mil -- Downloaded: 2017-01-09T06:14Z
Check the source to verify that this is the current version before use.

C.7.5.3. Tiny face (G-FA-TI).

Definition: Area of a face is below the allowable minimum.

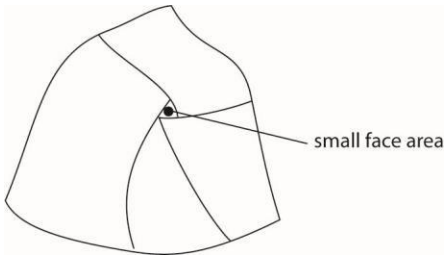

Effects of condition on CAD data quality:

Design and drafting: Tiny faces may be treated as invalid. Surface offsets, fillets, rounds, cross sections, and other features in proximity to tiny faces may fail.

Data exchange: Faces may not trim properly. Models may fail to sew into solids after translation.

Finite element analysis: Mesh generation may fail. Mesh quality may suffer from excessive numbers of elements or distorted elements.

Numerically controlled manufacturing: Errors in tool paths may occur. Solid models may not sew properly upon import.

Recommended correction: Enlarge or adapt neighboring faces to eliminate the tiny face.

C.7.5.4. Narrow face (G-FA-NA).

Definition: Width of a face in one direction is consistently below the allowable minimum.

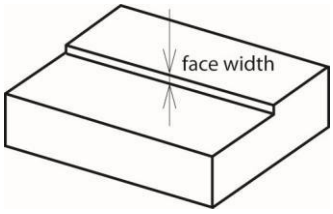

Effects of condition on CAD data quality:

Design and drafting: Narrow faces may be treated as invalid. Surface offsets, fillets, rounds, cross sections, and other features in proximity to narrow faces may fail.

Data exchange: Faces may not trim properly. Models may fail to sew into solids after translation.

Finite element analysis: Mesh generation may fail. Mesh quality may suffer from excessive numbers of elements or distorted elements.

Source: https://assist.dla.mil -- Downloaded: 2017-01-09T06:14Z
Check the source to verify that this is the current version before use.

Numerically controlled manufacturing: Errors in tool paths may occur. Solid models may not sew properly upon import.

Recommended correction: Enlarge or adapt neighboring faces to eliminate the narrow face.

C.7.5.5. Narrow region (G-FA-RN).

Definition: The distance between the two closest points in a loop or two loops in the same face falls below the allowable minimum.

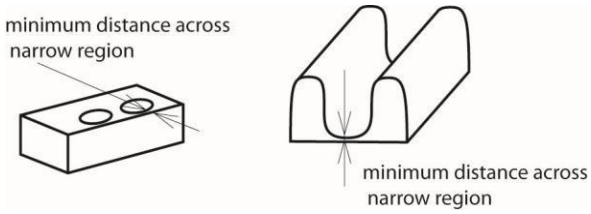

Effects of condition on CAD data quality:

Design and drafting: Face definition may be misinterpreted if two or more loops lie too close to one another. Surface offsets, fillets, rounds, cross sections, and other features in proximity to narrow regions may fail.

Data exchange: Faces may not trim properly. Models may fail to sew into solids after translation.

Finite element analysis: Mesh generation may fail. Mesh quality may suffer from excessive numbers of elements or distorted elements.

Numerically controlled manufacturing: Errors in tool paths may occur. Solid models may not sew properly upon import.

Recommended correction: Split the face and delete the narrow region to eliminate the ambiguity among loops.

Source: https://assist.dla.mil -- Downloaded: 2017-01-09T06:14Z
Check the source to verify that this is the current version before use.

C.7.5.6. Intersecting loops (G-FA-IS).

Definition: Two or more loops in the same face intersect one another. Intersecting loops may render the face invalid. The integrity of the model topology may be compromised. The criterion is true if the faces are not completely embedded within allowable system tolerances.

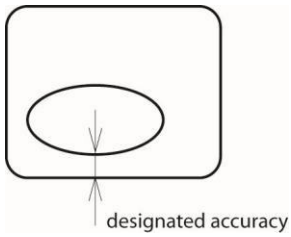

Effects of condition on CAD data quality:

Design and drafting: Faces and solids may become invalid. Various modeling operations may fail.

Data exchange: Faces may not trim properly. Models may fail to sew into solids after translation.

Finite element analysis: Mesh generation may fail. Mesh quality may suffer from excessive numbers of elements or distorted elements.

Numerically controlled manufacturing: Errors in tool paths may occur. Solid models may not sew properly upon import.

Recommended correction: Enlarge the distance between loops. If necessary, remove loops, partition faces, or consolidate edge loops while maintaining the desired model shape.

C.7.5.7. Embedded faces (G-FA-EM).

Description: A set of completely overlapping faces of any type. The criterion is true if the faces are not completely embedded within allowable threshold value.

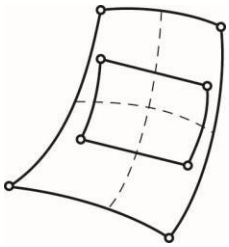

Effects of condition on CAD data quality:

Design and drafting: Errors may occur when selecting faces. Redundant faces consume excess storage.

Data exchange: Solid models may fail to sew after translation.

Source: https://assist.dla.mil -- Downloaded: 2017-01-09T06:14Z
Check the source to verify that this is the current version before use.

Finite element analysis: Gaps may occur between mesh elements

Numerically controlled manufacturing: Tool-path generation algorithms may produce excessive or insufficient cuts.

Recommended correction: Delete the redundant embedded face.

C.7.5.8. Inconsistent face on surface (G-FA-IT).

Definition: The direction of the face normal vectors is inconsistent with its underlying surface. The criterion is true if the directions are consistent. Some CAD systems don't assign a normal orientation to faces, so faces and their associated surfaces are always consistent. The criterion is true if the face and base surface normal vectors are consistent.

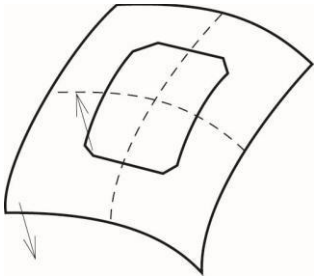

Effects of condition on CAD data quality:

Design and drafting: No effect on quality.

Data exchange: Unwanted self-penetration and face degeneration may occur. Faces may not trim properly following translation.

Finite element analysis: No effect on FE applications.

Numerically controlled manufacturing: No effect.

Recommended correction: Reverse the face direction if necessary.

Source: https://assist.dla.mil -- Downloaded: 2017-01-09T06:14Z
Check the source to verify that this is the current version before use.

C.7.5.9. Multi-region surface (G-FA-MU).

Definition: The number of faces, N, associated with a single base surface.

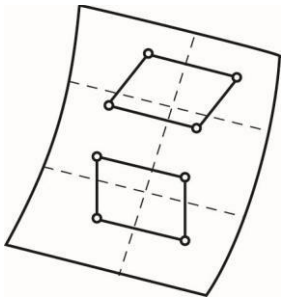

Effects of condition on CAD data quality:

Design and drafting: No effect on quality if the CAD system supports multiple faces on a surface. May cause confusion when the base surface is modified.

Data exchange: May cause errors if the receiving system does not support multi-region surfaces.

Finite element analysis: No effect on FE applications if multi-region surfaces are supported.

Numerically controlled manufacturing: No effect if multi-region surfaces are supported.

Recommended correction: Divide base surfaces so that the value of all multi-regions is 1.

C.7.5.10 Large Round Faces (G-FA-LS)

Definition: A set of connected faces are defined on a surface with an extremely large radius of curvature.

Measurement: Largest radius of curvature in either parametric direction along the underlying surface. Does not apply to faces defined on a plane.

Effects of condition on CAD data quality for manufacturing: Some material removal machining processes are unable to accurately produce geometry with a large radius of curvature, thereby requiring a process which is more complex and expensive.

Recommended correction: Recreate these faces using a planar geometric definition.

Source: https://assist.dla.mil -- Downloaded: 2017-01-09T06:14Z
Check the source to verify that this is the current version before use.

C.7.5.11 Tiny Round Faces (G-FA-CR)

Definition: A set of connected faces are defined on a surface with an extremely small radius of curvature.

Measurement: Smallest radius of curvature in any parametric direction along the underlying surface.

Effects of condition on CAD data quality for manufacturing: Some material removal machining processes are unable to accurately produce geometry with a small radius of curvature, thereby requiring a process which is more complex and expensive.

Recommended correction: Increase the radius or replace the round with a sharp edge.

C.7.5.12 Tiny Hole Faces (G-FA-TE)

Definition: A set of connected faces which represent a hole are defined on a surface with an extremely small radius of curvature.

Measurement: Diameter of the hole.

Effects of condition on CAD data quality for manufacturing: Some material removal machining processes are unable to produce a hole with a small diameter, thereby requiring a process which is more complex and expensive.

Recommended correction: Increase the hole diameter or remove it from the product definition.

C.7.6. Shell criteria.

C.7.6.1. Large face gap (G-SH-LG).

Definition: Excessive distance between the boundaries of adjacent faces (G_0 discontinuity)

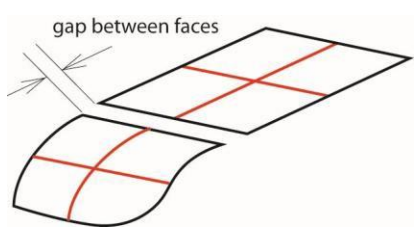

Effects of condition on CAD data quality:

Design and drafting: Possible loss of shell topology leading to various errors and instabilities

Source: https://assist.dla.mil -- Downloaded: 2017-01-09T06:14Z
Check the source to verify that this is the current version before use.

Data exchange: Faces may not trim properly. Automated self-healing may insert undesirable tiny or narrow faces.

Finite element analysis: Mesh algorithms may fail or produce excessive numbers of elements.

Numerically controlled manufacturing: Tool-path-generating software may fail. Tool paths may gouge the work piece.

Recommended correction: Rebuild the affected areas with common boundary curves

C.7.6.2. Non-tangent faces (G-SH-NT).

Definition: Adjacent faces are not tangent (G_1 discontinuity).

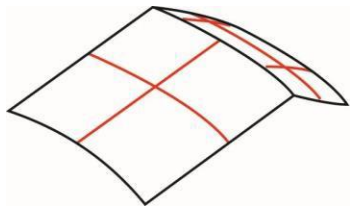

Effects of condition on CAD data quality:

Non-tangent faces are not necessarily indicative of poor data quality. In some cases, such as square corners, chamfered, and beveled edges, non-tangent conditions are intended. When curves are intended to be tangent, but aren't, then G1 discontinuity is indicative or poor quality. Non-tangent conditions are usually visible to the unaided eye and can be felt by finger tips on physical models.

Design or drafting: A quality defect only when tangency is intended.

Data exchange: No harmful effects on data exchange.

Finite-element analysis: No harmful effects on mesh generation or model solution.

Numerically controlled manufacturing: Sharp edges should generally be avoided in manufacturing. However, when making machine parts, removal of sharp edges may be covered by a general note or specification. When tangency is intended between surfaces, non-tangent surfaces produce noticeable defects in finished products.

Recommended correction: Adjust one or both faces to eliminate the unwanted condition.

C.7.6.3. Non-smooth faces (G-SH-NS).

Definition: Radius of curvature changes at the common boundary of two faces (G_2 discontinuity).

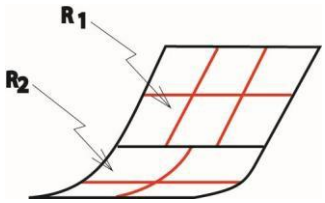

Source: https://assist.dla.mil -- Downloaded: 2017-01-09T06:14Z
Check the source to verify that this is the current version before use.

Discontinuous curvature is a quality defect only if adjacent surfaces are intended by designers to have continuous curvature.

Design or drafting: A quality defect only when curvature continuity is required.

Data exchange: No harmful effects on data exchange.

Finite-element analysis: No harmful effects on mesh generation or model solution.

Numerically controlled manufacturing: Curvature discontinuity is visible in finished parts. No effect on machining operations.

Recommended correction: Adjust one or both faces to eliminate the unwanted condition.

C.7.6.4. Self-intersecting shell (G-SH-IS).

Definition: A surface or patch intersects itself at one or more locations. The criterion is true of the shell does not intersect itself within specified precision.

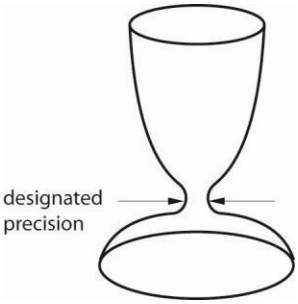

Effects of condition on CAD data quality:

Design and drafting: Self-intersecting shells can’t be physically manufactured.

Data exchange: Faces may not trim properly.

Finite element analysis: Automatic mesh generation will fail.

Numerically controlled manufacturing: Self-intersecting shells can’t be physically manufactured.

Recommended correction: Remove the self-intersecting faces and recreate them in a way that does not produce a self-intersection. Trim the self-intersecting portion of the shell provided that a sharp angle condition doesn’t occur.

Source: https://assist.dla.mil -- Downloaded: 2017-01-09T06:14Z
Check the source to verify that this is the current version before use.

C.7.6.5. Sharp face angle (G-SH-SA).

Definition: Shell faces meet at angles below the recommended minimum.

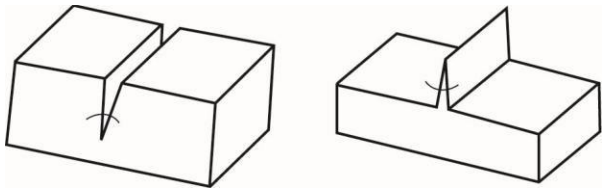

Effects of condition on CAD data quality:

Design and drafting: Sharp edges are generally undesirable in products, with the exception of cutting tools or weapons. Sharp edges are prone to breakage. Sharp notches may promote cracking or fatigue failure.

Data exchange: No problems with data exchange.

Finite element analysis: Excessively fine local mesh may be generated.

Numerically controlled manufacturing: Sharp edges are prone to breakage. Sharp notches may promote cracking during manufacture.

Recommended correction: Unless the design intent requires sharp edges, revised the shell to eliminate them.

C.7.6.6. Inconsistent face in shell (G-SH-IT).

Definition: Faces with normal vectors pointing in opposite directions share a common boundary. Or the shell normal vector orientation is opposite from the face normal vector. The criterion is true if no inconsistencies exist.

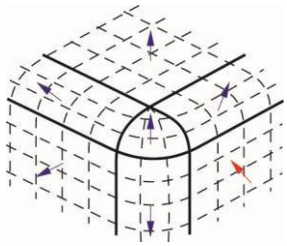

Effects of condition on CAD data quality:

Design and drafting: Offset operations may fail. Surfaces may appear to be missing from the shell.

Data exchange: Faces may not be translated or may not sew properly following translation.

Finite element analysis: No effect on FE applications.

Numerically controlled manufacturing: Tool paths may fail because surface offsets fail.

Source: https://assist.dla.mil -- Downloaded: 2017-01-09T06:14Z
Check the source to verify that this is the current version before use.

Recommended correction: Reverse normal directions of the shell or selected faces as necessary.

C.7.6.7. Free edge (G-SH-FR).

Definition: An edge curve is used by only one face in a shell. The criterion is true if no edges are used by fewer than two faces.

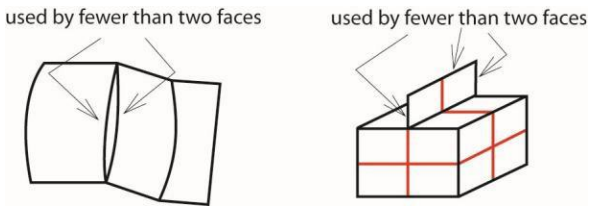

Effects of condition on CAD data quality:

Design and drafting: Non-manifold objects can't be physically realized. Some CAD software can't display non-manifold geometry.

Data exchange: Some target applications don't support non-manifold geometry.

Finite element analysis: Mesh generation may fail due to non-manifold conditions.

Numerically controlled manufacturing: Tool paths may fail because of non-manifold conditions.

Recommended correction: Revise shell faces to eliminate free edges.

C.7.6.8. Over-used edge (G-SH-NM).

Definition: An edge curve is shared by more than two faces in a shell. The criterion is true if no edges are used by more than two faces.

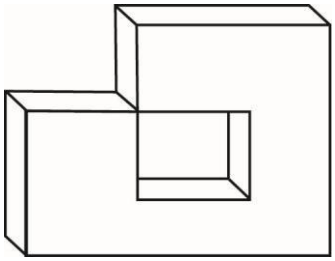

Effects of condition on CAD data quality:

Design and drafting: Some CAD software can't work with non-manifold geometry.

Data exchange: Some target applications don't support non-manifold geometry.

Finite element analysis: Mesh generation may fail due to non-manifold conditions.

Source: https://assist.dla.mil -- Downloaded: 2017-01-09T06:14Z
Check the source to verify that this is the current version before use.

Numerically controlled manufacturing: Non-manifold conditions produce structurally unsound bodies.

Recommended correction: Revise shell faces to eliminate over used edges.

C.7.6.9. Over-used vertex (G-SH-OU).

Definition: A vertex is shared by too many edges. The criterion value is an integer, N, equal to the number of edges shared by any vertex.

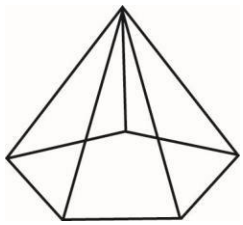

Effects of condition on CAD data quality:

Design and drafting: Designers may intend that multiple edges meet at a common vertex. Too many edges meeting at a common vertex may be indicative of incorrect geometry

Data exchange: Gaps or micro elements may occur.

Finite element analysis: Distorted elements may occur.

Numerically controlled manufacturing: Milling operations may be difficult.

Recommended correction: Review conditions visually and revise if necessary.

C.7.7. Solid body criteria.

C.7.7.1. Embedded solids (G-SO-EM).

Description: Solid volumes completely surrounded by other solid volumes. The logical value of the criterion is true if no solids are embedded within other solids.

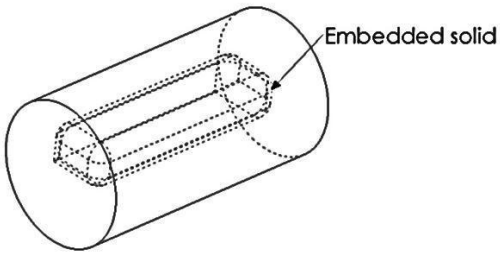

Source: https://assist.dla.mil -- Downloaded: 2017-01-09T06:14Z
Check the source to verify that this is the current version before use.

Effects of condition on CAD data quality:

Design and drafting: May cause incorrect mass properties calculations, increases file size unnecessarily, may be indicative of unintended errors, may produce unintended quality defects during future operations, may cause incorrect geometry to be selected during editing, may cause unexpected shape changes during edits. Embedded solids may be desired to model differing material types within a solid object. For example, a thermoplastic part may be reinforced with a steel core.

Data exchange: Models may fail to sew after translation.

Finite element analysis: May produce excessive or unwanted mesh elements.

Numerically controlled manufacturing: Tool-path generation algorithms may gouge the work piece.

Recommended correction: Delete the embedded solid(s) unless required by the design.

C.7.7.2. Intersecting Shells (G-SO-IS).

Definition: A pair of shells intersect one another in a solid body. The logical value of this criterion is true if no shells intersect within the solid within the specified limits of precision.

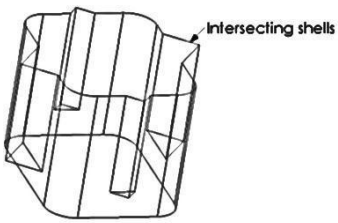

Effects of condition on CAD data quality:

Design and drafting: Solid models with self-intersecting shells may be unable to be manufactured or indicative of unintended design errors.

Data exchange: May cause trimming problems with faces, failure of solid models to sew.

Finite element analysis: May produce unrealistic models.

Numerically controlled manufacturing: Gouging and other unsatisfactory cuts may occur.

Recommended correction: Rebuild the models without self-intersecting shells.

Source: https://assist.dla.mil -- Downloaded: 2017-01-09T06:14Z
Check the source to verify that this is the current version before use.

C.7.7.3. Multi-volume solid (G-SO-MU).

Description: A model contains multiple solid bodies that do not intersect.

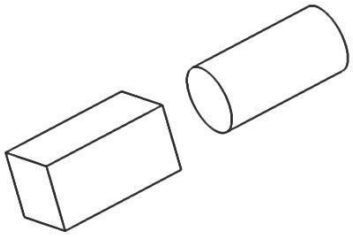

Effects of condition on CAD data quality:

Design and drafting: Multi-body solid models are increasingly employed by CAD software. If used intentionally, they are not indicative of errors. Not all CAD software supports multi-volume solids.

Data exchange: If the target system does not support multi-volume solids, geometry may be lost.

Finite element analysis: No effect on FEA unless the system does not support multi-body solids.

Numerically controlled manufacturing: No effect on NC unless the system does not support multi-volume solids.

Recommended correction: Eliminate files that contain multiple volumes before translating to systems that don't support multi-body parts.

C.7.7.4. Tiny solid (G-SO-TI).

Definition: The overall extent of the solid is the below permissible minimum.

Effects of condition on CAD data quality:

Design or drafting: May be indicative of part interference or design errors.

Data exchange: Data may be lost during translation.

Finite element analysis: Unwanted mesh elements may be produced. Numerically

controlled manufacturing: Tiny solids can't be manufactured. Recommended

correction: Remove the tiny solid. Rebuild adjacent bodies if necessary.

Source: https://assist.dla.mil -- Downloaded: 2017-01-09T06:14Z
Check the source to verify that this is the current version before use.

C.7.7.5. Solid void (G-SO-VO).

Description: Internal or external void in a solid model. The logical value of the criterion is true if no internal cavity exists.

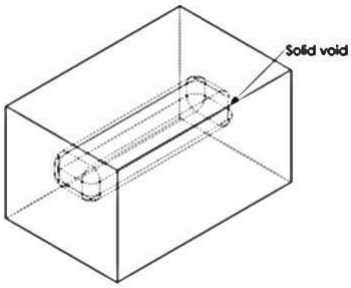

Effects of condition on CAD data quality:

Design and drafting: External voids are generally errors and may cause unexpected results in future model changes. Internal voids may be desired if parts are intended to be hollow.

Data exchange: Some solid modeling systems can't except internal or external voids.

Finite element analysis: May produce unwanted mesh elements.

Numerically controlled manufacturing: Tool-path generation algorithms may gouge the work piece.

Recommended correction: Delete solid voids unless required by the design.

C.7.7.6 Narrow Solid Space (G-SO-TE)

Definition: A narrow space outside a solid, between two features with relatively parallel faces.

Measurement: Maximum distance between the faces which form the sides of the narrow space.

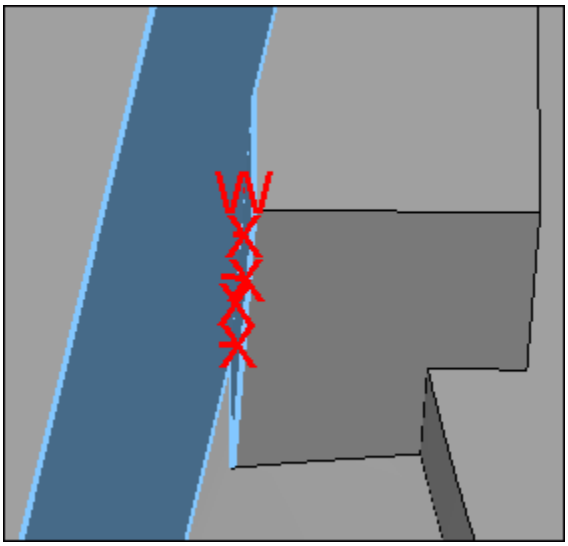

Source: https://assist.dla.mil -- Downloaded: 2017-01-09T06:14Z
Check the source to verify that this is the current version before use.

Effects of condition on CAD data quality for manufacturing: This condition is extremely difficult to manufacture and is usually unintentional – not design intent.

Recommended correction: Modify one or both bounding features to close the narrow space.

C.7.7.7 Narrow Step (G-SH-TO)

Definition: A narrow face, or narrow region of a face, which forms a sharp offset between neighboring faces.

Measurement: Maximum distance across the narrow face or region.

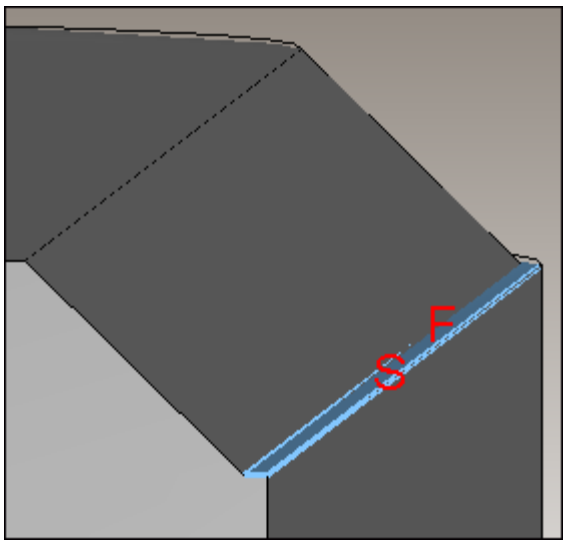

Effects of condition on CAD data quality for manufacturing: This condition is difficult to manufacture and is usually unintentional – not design intent.

Recommended correction: Modify the neighboring features to align the larger faces on either side and remove the sharp offset.

C.7.7.8 Over-Used Face (G-FA-OU)

Definition: A face which is used in more than one shell.

Measurement: The number of shells which contain the face.

Effects of condition on CAD data quality for manufacturing: While this condition may be valid and desirable for CAE analysis, it is a non-manifold BREP condition (impossible to manufacture) and should not exist in a model intended for direct reuse in manufacturing processes.

Recommended correction: Modify the neighboring features to remove this condition.

Source: https://assist.dla.mil -- Downloaded: 2017-01-09T06:14Z
Check the source to verify that this is the current version before use.

C.7.7.9 Thin Solid Volume (G-SO-NA)

Definition: A narrow portion of the volume of a solid.

Measurement: Minimum distance between relatively parallel faces on opposite sides of the solid.

Effects of condition on CAD data quality for manufacturing: This condition is difficult to manufacture and is usually unintentional – not design intent.

Recommended correction: Modify the neighboring features to increase the thickness of the solid.

C.7.8 Assembly structure quality criteria

C.7.8.1 Embedded Assemblies (G-AS-EM)

Definition: Two or more instances of the same sub-assembly in an assembly occupy the same physical space and have the same orientation.

Measurement: The number of duplicated instances.

Effects of condition on CAD data quality for manufacturing: This condition is unrealistic and causes confusion in the structure of the model. It produces incorrect assembly mass properties.

Recommended correction: This condition is usually caused when two assemblies define the same sub-assembly then cause the duplication when included into a higher-level assembly. Remove one sub-assembly instance from one of the lower-level assemblies.

C.7.8.2 Embedded Parts (G-PT-EM)

Definition: Two or more instances of the same part in an assembly occupy the same physical space and have the same orientation.

Measurement: The number of duplicated instances.

Effects of condition on CAD data quality for manufacturing: This condition is unrealistic and causes confusion in the structure of the model. It produces incorrect assembly mass properties.

Recommended correction: This condition is usually caused when two sub-assemblies define the same part instance then cause the duplication when included into a parent assembly. Remove one part instance from one of the sub-assemblies.

C.7.8.3 Missing Part (G-PT-MI)

Definition: An assembly part instance references a part model which does not exist.

Measurement: The criterion is false if any occurrences of this condition exist in the model.

Source: https://assist.dla.mil -- Downloaded: 2017-01-09T06:14Z
Check the source to verify that this is the current version before use.

Effects of condition on CAD data quality for manufacturing: The assembly definition is incomplete.

Recommended correction: Locate and add the missing part model file to the assembly package or remove the part instance from the assembly definition.

C.7.9 Annotation quality criteria

Intrinsic annotation errors are incorrect regardless of whether the model is in its native format or is a derivative translated from another system. The following are examples of intrinsic annotation errors.

C.7.9.1 Non-Graphical Annotation (A-AN-NG)

Definition: The semantic representation of an annotation has no corresponding presentation graphics.

Measurement: The criterion is false if any occurrences of this condition exist in the model pair.

Effects of condition on CAD data quality for manufacturing: This condition causes definition of the model to be incomplete for downstream processes which rely on the visual (human) consumption of annotation information.

Recommended correction: Create the presentation graphics for this annotation.

C.7.9.2 Unviewed Annotation (A-AN-UV)

Definition: An annotation is not included in a saved view.

Measurement: The criterion is false if any occurrences of this condition exist in the model pair. Special consideration may need to be given to “banner” annotations which are intended to be visible at all times, independent of which saved view is active.

Effects of condition on CAD data quality for manufacturing: This condition causes confusion when for downstream processes which rely on the visual (human) consumption of annotation information and expect all annotations to be visible in at least one saved view.

Recommended correction: Assign this annotation to a saved view.

Source: https://assist.dla.mil -- Downloaded: 2017-01-09T06:14Z
Check the source to verify that this is the current version before use.

C.7.9.3 Incorrect application of geometric characteristics to model features

Distances between model features should be indicated from their centerlines or center points, not from model edges.

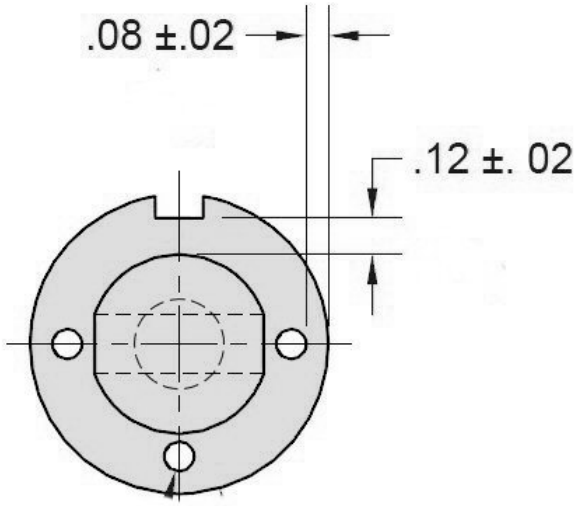

Inappropriate dimension from edges of extruded features.

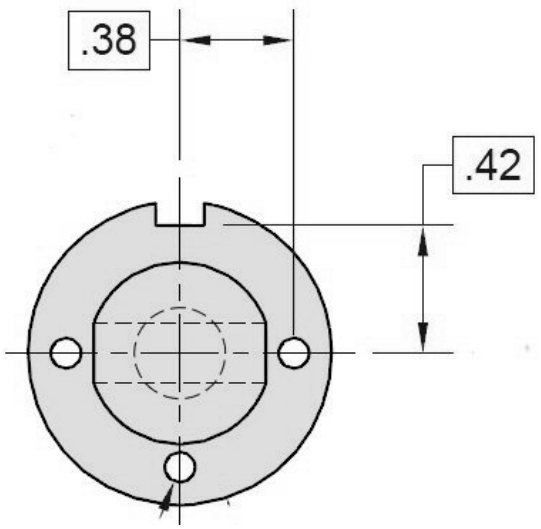

Baseline dimensions correctly applied to model features.

Source: https://assist.dla.mil -- Downloaded: 2017-01-09T06:14Z
Check the source to verify that this is the current version before use.

C.7.9.4 Incorrect use of basic dimensions

Basic dimensions describe the theoretically accurate size, profile, orientation, or location of a feature or datum target. The following are examples of incorrect uses of basic dimensions:

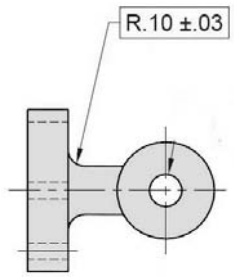

Incorrect use of basic box around a dimension with a tolerance.

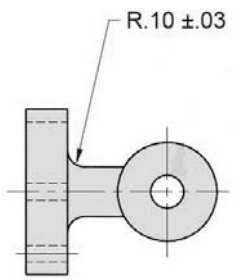

Correct display of radius dimension with a tolerance.

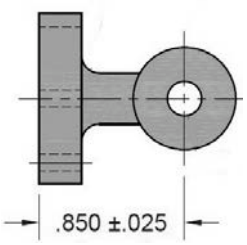

A plus/minus tolerance should not be used on a dimension between two features.

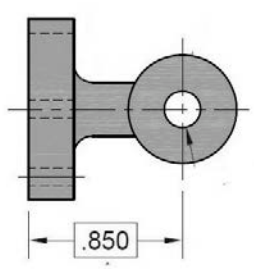

Correct use of a basic dimension to indicate the distance between a two features: a plane and a cylindrical hole.

Source: https://assist.dla.mil -- Downloaded: 2017-01-09T06:14Z
Check the source to verify that this is the current version before use.

C.7.9.5 Inaccurate dimensions or dimensions not to scale

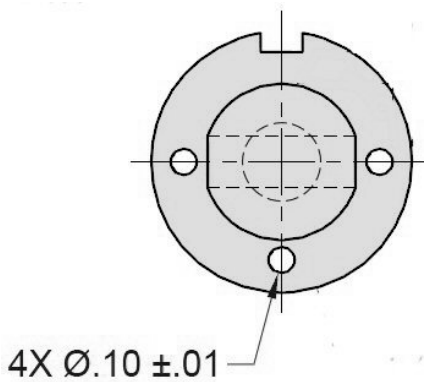

Inaccurate hole count. (The proper number is 3.)

Annotated dimensions should be to scale on the model. Not-to-scale dimensions should not be employed in model-based designs.

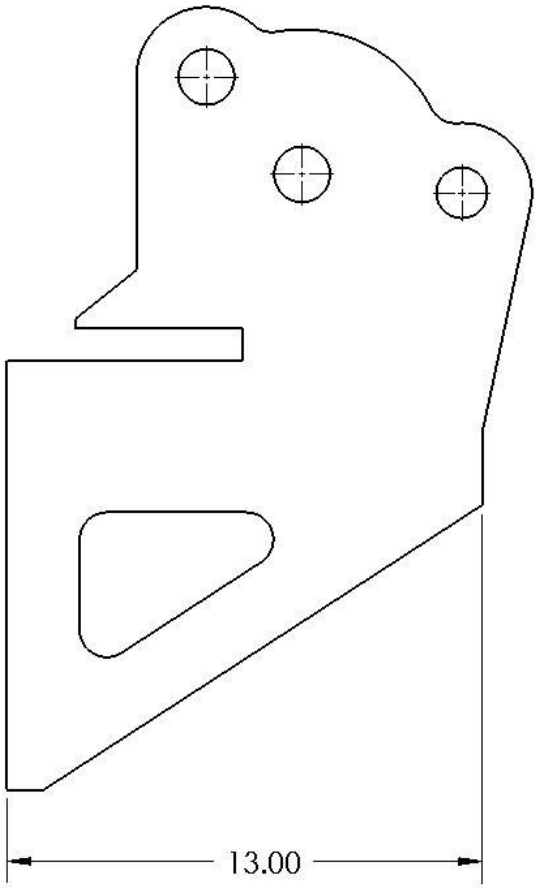

Actual model dimension is 13.10.

Source: https://assist.dla.mil -- Downloaded: 2017-01-09T06:14Z
Check the source to verify that this is the current version before use.

C.7.9.6 Datum feature symbols missing or incorrectly applied

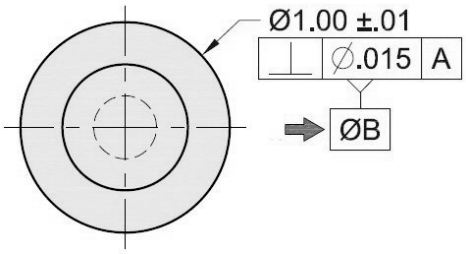

Diameter symbol not appropriate inside datum feature symbol. Only letters are permitted.

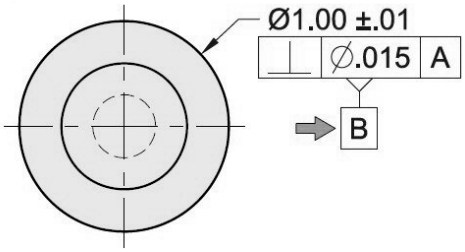

Correct datum feature symbol

Datum symbols must always be associated with a part surface,feature (such as a plane, cylinder, or axis) or geometric tolerance block. Datum symbols without leaders indicating their proper surfaces are errors.

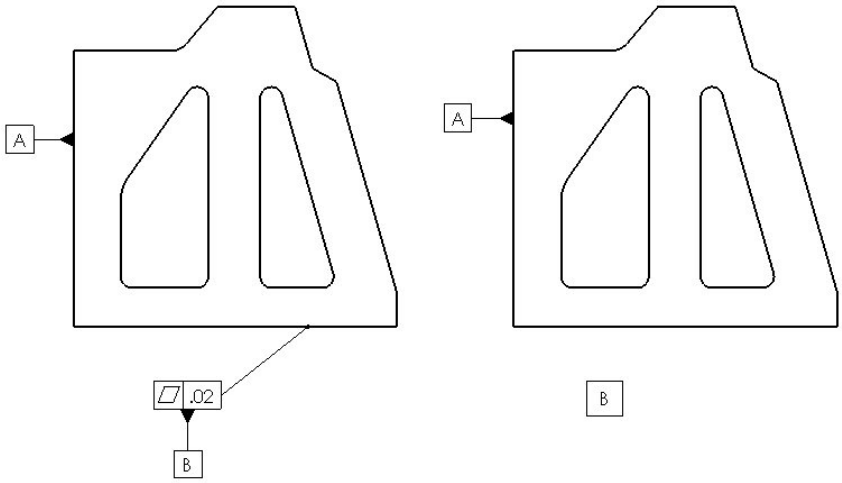

Datum symbols A and B are shown correctly on the left. Datum symbol B on right is incorrect.

Source: https://assist.dla.mil -- Downloaded: 2017-01-09T06:14Z
Check the source to verify that this is the current version before use.

C.7.9.7 Missing or incorrect use of symbols in tolerance blocks and dimensions

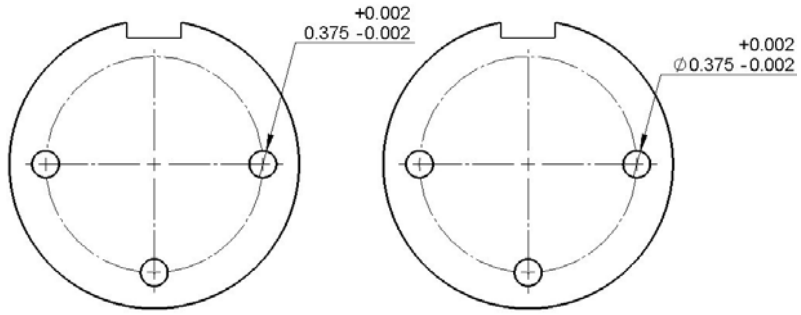

Missing diameter symbol in size dimensions on left, shown correctly on right.

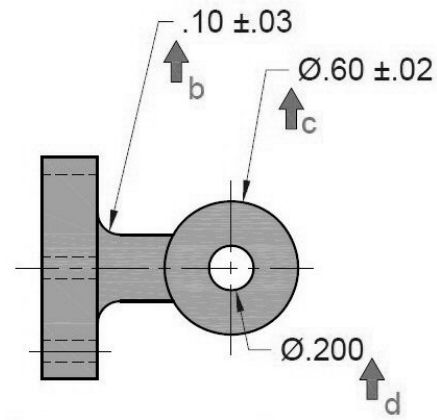

b. Missing R for radius dimension c. Missing S for spherical diameter dimension d. Missing tolerance for hole diameter

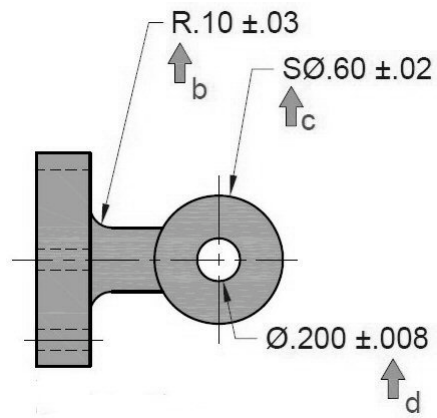

b. Correct inclusion of R in radius dimension c. Correct inclusion of S in spherical diameter dimension d. Tolerance correctly applied to diameter dimension

Source: https://assist.dla.mil -- Downloaded: 2017-01-09T06:14Z
Check the source to verify that this is the current version before use.

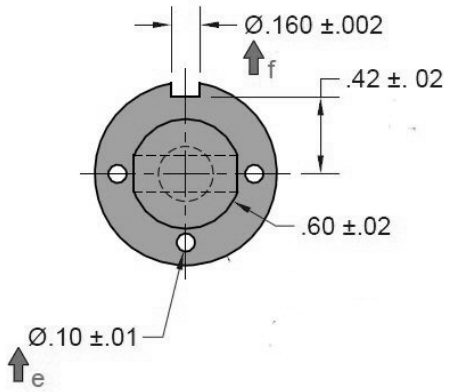

e. missing hole count
f. diameter symbol incorrectly applied to rectangular slot feature

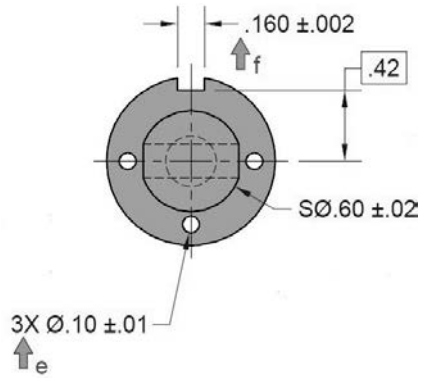

e. Correct number of holes indicated
f. correct dimension of rectangular feature (no diameter symbol)

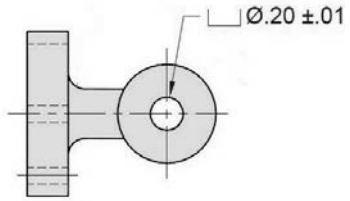

Counterbore symbol is shown incorrectly because the hole has no counterbore.

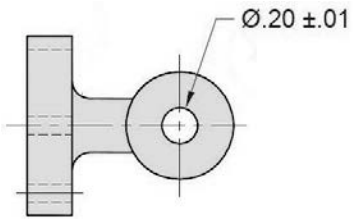

Correct use of diameter symbol with a round hole.

Source: https://assist.dla.mil -- Downloaded: 2017-01-09T06:14Z
Check the source to verify that this is the current version before use.

C.7.9.7 View errors

Annotations should not be buried within part solids. When the model is shaded, the annotations will not be visible. Annotations should be repositioned outside the solid model.

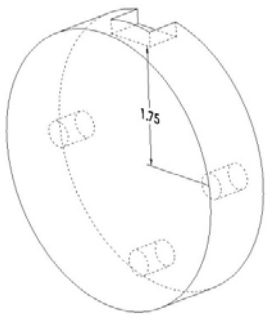

The 1.75 inch dimension is incorrectly placed on a plane inside the solid model.

In accordance with ANSI Y14.41, 3D annotations should be associated with a (saved) view that positions the model to appropriately show both the annotation and the feature to which it is applied. Annotations no associated with views are in error and should be corrected by associating them with an appropriate view.

C.7.9.8 Improper use of line types and arrowheads in leaders and dimensions

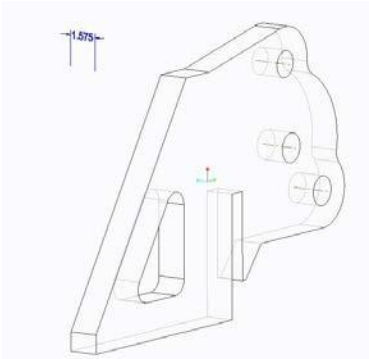

Disconnected leader for dimension annotation.

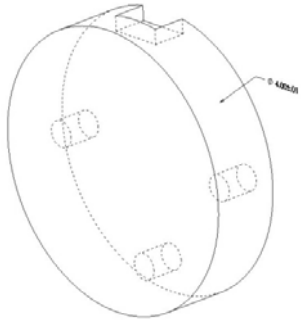

Surface leader indicated by an arrowhead instead of a dot.

Source: https://assist.dla.mil -- Downloaded: 2017-01-09T06:14Z
Check the source to verify that this is the current version before use.

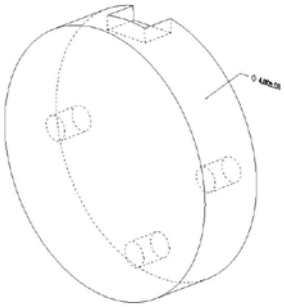

Correct surface leader indicated by a dot.

C.7.9.9 Errors in tolerance values

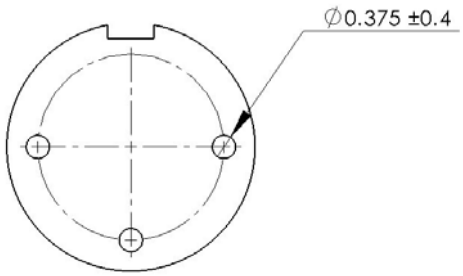

Dimension tolerances larger than dimension values

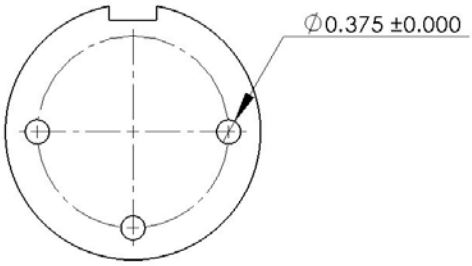

Tolerances with zero values

Source: https://assist.dla.mil -- Downloaded: 2017-01-09T06:14Z
Check the source to verify that this is the current version before use.

C.8 EXHIBIT B – RECOMMENDED NUMERICAL THRESHOLDS FOR GEOMETRY VALIDATION CRITERIA.

Automotive industry threshold values						
	Native			Derivative		
Criteria/Use Case	Design	Analysis	Manufacturing	ISO 10303 (STEP)	Visualization	Translation
Curve criteria						
Large curve or segment gap (G-CU-LG)	.01 mm max	.01 mm max	.01 mm max	.01 mm max	NR	.01 mm max
Non-tangent curves or segments (G-CU-NT)	2° max	O	O	3° max	O	O
Tiny Curve or segment (G-CU-TI)	.01 mm min.	.01 mm min.	.005 mm min.	.005 mm min.	NR	.005 mm min.
Self-Intersecting curve (G-CU-IS)	0.01 mm	0.01 mm	0.01 mm	.01 mm	NR	0.01 mm
Surface criteria						
Non-Tangent surfaces or patches (G-SU-NT)	2° max	O	O	3° max	NR	3° max
Narrow surface or patch (G-SU-NA)	.01 mm min.	A	.005 mm min.	.005 mm min.	NR	.005 mm min.
Self-intersecting surface (G-SU-IS)	.01 mm	0.01 mm	.01 mm	.01 mm	NR	.01 mm
Edge loop criteria						
Self-intersecting loop (G-LO-IS)	.01 mm	0.01 mm	0.01 mm	.01 mm	NR	.01 mm
Face criteria						
Large edge face gap (G-FA-EG)	.01 mm max	.01 mm max	.01 mm max	.01 mm max	NR	.01 mm max
Narrow face (G-FA-NA)	.01 mm min.	.01 mm min.	.01 mm min.	.01 mm min.	NR	.01 mm min.
Embedded faces (G-FA-EM)	NA	A	.01 mm min.	.01 mm min.	NR	.01 mm min.
Inconsistent face on surface (G-FA-IT)	T	T	T	T	T	T
Shell criteria						
Large face gap (G-SH-LG)	.01 mm max	.01 mm max	.01 mm max	.01 mm max	NR	.01 mm max
Over-used edge (G-SH-NM)	>2	A	>2	>2	>2	>2

Aerospace Industries Association LOTAR Par 110 recommendations						
	Native			Equivalents		
Criteria	Design	Analysis	Manufacturing	ISO 10303 (STEP)	Visualization	Translation
Curve criteria	Threshold values					
Large curve or segment gap (G-CU-LG)	.01 mm max	.01 mm max	.001 mm max	.001 mm max	NR	.01 mm max
Non-tangent curves or segments (G-CU-NT)	O-0.5° max	A	O	75° max	NR	A
Surface criteria						
Fragmented surface (G-SU-FG)	A or N ≤ 25	A or N ≤ 25	A or N ≤ 25	2500 patch max.	A or N ≤ 25	A or N ≤ 25
Tiny surface or patch (G-SU-TI)	0.01 mm^2 min.	0.01 mm^2 min.	0.01 mm^2 min.	0.01 mm^2 min.	NR	0.01 mm^2 min.
Edge loop criteria						
Large edge gap (G-LO-LG)	.01 mm max	.01 mm max	.01 mm max	1.0 mm max	NR	.01 mm max
Face criteria						
Large edge face gap (G-FA-EG)	.01 mm max	.01 mm max	.01 mm max	1.0 mm max	NR	.01 mm max
Large vertex gap (G-FA-VF)	.01 mm max	.01 mm max	.01 mm max	1.0 mm max	NR	.01 mm max
Tiny face (G-FA-TI)	0.01 mm^2 min.	0.01 mm^2 min.	0.01 mm^2 min.	0.01 mm^2 min.	NR	0.01 mm^2 min.
Shell criteria						
Large face gap (G-SH-LG)	.01 mm max	.01 mm max	.01 mm max	1.0 mm max	NR	.01 mm max
Free edge (G-SH-FR)	T	U	T	T	T	T
Over-used edge (G-SH-NM)	>2	NR	>2	>2	>2	>2
Solid body criteria						
Embedded solids (G-SO-EM)	T	T	T	T	T	T

Legend	Code
Value agreed by sender and receiver	A
Optional when required by design	O
User preference	U
Not required	NR
Logical value true	T

Source: https://assist.dla.mil -- Downloaded: 2017-01-09T06:14Z
Check the source to verify that this is the current version before use.

C.8.1. Department of Defense Product Data Validation Criteria Worksheet

Supplier name	Contract number	Contact name	Contact phone

Source CAD system	Software release/build

Delivery format: ❑ same as source ❑ ISO 10303-203 (STEP) ❑ JT ❑ 3D PDF

Commercial CAD software	Software release/build

Intended use: ❑ design changes ❑ analysis ❑ manufacturing ❑ archival storage
❑ design review ❑ supplier distribution

Conformance required	Validation Criteria	Validation code	Threshold value (mm)
	Curve criteria		
❑	Large curve or segment gap	(G-CU-LG)	_____
❑	Non-tangent curves or segments	(G-CU-NT)	_____
❑	Non-smooth curves or segments	(G-CU-NS)	_____
❑	Tiny Curve or segment	(G-CU-TI)	_____
❑	Indistinct curve knots	(G-CU-IK)	_____
❑	Self-Intersecting curve	(G-CU-IS)	_____
❑	Embedded curves	(G-CU-EM)	_____
❑	Excessively high-degree Curve	(G-CU-HD)	_____
❑	Fragmented curve	(G-CU-FG)	_____
❑	Wavy planar curve	(G-CU-WV)	_____
❑	Small radius of curvature	(G-CU-CR)	_____
	Surface criteria		
❑	Large gap between surfaces	(G-SU-LG)	_____
❑	Non-Tangent surfaces or patches	(G-SU-NT)	_____
❑	Non-smooth surfaces or patches	(G-SU-NS)	_____
❑	Tiny surface or patch	(G-SU-TI)	_____
❑	Narrow surface or patch	(G-SU-NA)	_____
❑	Relatively narrow neighboring	(G-SU-RN)	_____
❑	Degenerate surface boundary	(G-SU-DC)	_____
❑	Degenerate surface corner	(G-SU-DP)	_____
❑	Indistinct surface knots	(G-SU-IK)	_____
❑	Self-intersecting surface	(G-SU-IS)	_____
❑	Embedded surfaces	(G-SU-EM)	_____
❑	Excessively high-degree surface	(G-SU-HD)	_____
❑	Fragmented surface	(G-SU-FG)	_____
❑	Unused patches	(G-SU-UN)	_____
❑	Folded surface	(G-SU-FO)	_____

Source: https://assist.dla.mil -- Downloaded: 2017-01-09T06:14Z
Check the source to verify that this is the current version before use.

Conformance required	Validation Criteria	Validation code	Threshold value (mm)
❑	Wavy surface	(G-SU-WV)	_____
❑	Small surface radius of curvature	(G-SU-CR)	_____
	Edge criteria		
❑	Tiny edge	(G-ED-TI)	_____
❑	Fragmented Edge	(G-ED-FG)	_____
❑	Inconsistent edge on curve	(G-ED-IO)	_____
	Edge loop criteria		
❑	Large edge gap	(G-LO-LG)	_____
❑	Non-tangent edges	(G-LO-NT)	_____
❑	Non-smooth edges	(G-LO-NS)	_____
❑	Self-intersecting loop	(G-LO-IS)	_____
❑	Sharp Edge Angle	(G-LO-SA)	_____
❑	Inconsistent edge in loop	(G-LO-IT)	_____
	Face criteria		
❑	Large edge face gap	(G-FA-EG)	_____
❑	Large vertex gap	(G-FA-VF)	_____
❑	Tiny face	(G-FA-TI)	_____
❑	Narrow face	(G-FA-NA)	_____
❑	Narrow region	(G-FA-RN)	_____
❑	Intersecting loops	(G-FA-IS)	_____
❑	Embedded faces	(G-FA-EM)	_____
❑	Inconsistent face on surface	(G-FA-IT)	_____
❑	Multi-region surface	(G-FA-MU)	_____
	Shell criteria		
❑	Large face gap	(G-SH-LG)	_____
❑	Non-tangent faces	(G-SH-NT)	_____
❑	Non-smooth faces	(G-SH-NS)	_____
❑	Self-intersecting shell	(G-SH-IS)	_____
❑	Sharp face angle	(G-SH-SA)	_____
❑	Inconsistent face in shell	(G-SH-IT)	_____
❑	Free edge	(G-SH-FR)	_____
❑	Over-used edge	(G-SH-NM)	_____
❑	Over-used vertex	(G-SH-OU)	_____
	Solid body criteria		
❑	Embedded solids	(G-SO-EM)	_____
❑	Intersecting Shells	(G-SO-IS)	_____
❑	Multi-volume solid	(G-SO-MU)	_____
❑	Solid void	(G-SO-VO)	_____
❑	Tiny solid	(G-SO-TI)	_____

Signatures:

_____	_____	_____	_____
Contracting officer	Date	Supplier	Date

Source: https://assist.dla.mil -- Downloaded: 2017-01-09T06:14Z
Check the source to verify that this is the current version before use.

C.9 EXHIBIT C – DERIVATIVE MODEL VALIDATION CRITERIA

Errors occur in derivative models when a source model is translated to a derivative format. If a source model is correct prior to translation and contains intrinsic errors after translation, then a translation error has occurred. However, some errors may be detectible only by comparing the source model with the derivative model. These criteria definitions are proposed based on MBD interoperability process validation studies within the DoD community.

C.9.1 Face geometry validation criteria

Each of these face validation criteria apply to faces translated from any topological form – an independent (unsewn) face, a face in an open shell or a face in a solid.

C9.1.1 Unmatched Face (G-FA-UM)

Definition: A face in one model has no corresponding face in the other model.

Measurement: The criterion is false if any face in the native model does not have a corresponding face in the translated model.

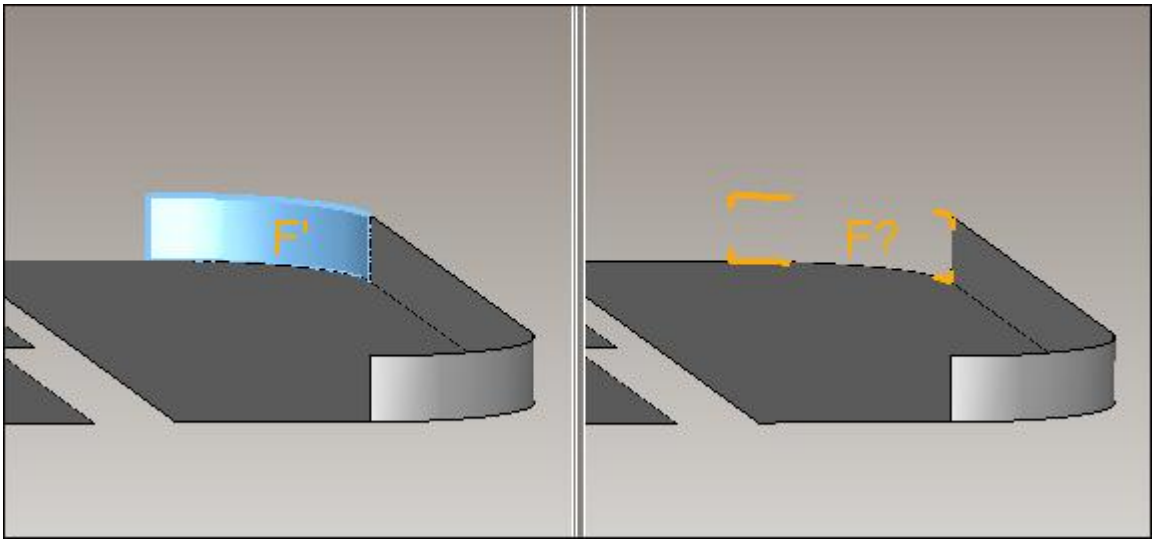

Effects of condition on model-based definition translation: If the unmatched face is in the native model, it represents significant data loss. If the unmatched face is in the translated model, it causes confusion and is generally the result of incorrect filtering during the translation process. For example, a hidden face intended for construction reference in the native model has been included in the translated model when only the (visible) product-defining geometry was intended.

Source: https://assist.dla.mil -- Downloaded: 2017-01-09T06:14Z
Check the source to verify that this is the current version before use.

C.9.1.2 Split Faces (G-FA-SP)

Definition: A face in the native model matches two or more faces in the translated model.

Measurement: The criterion is false if any occurrences of this condition exist in the model pair.

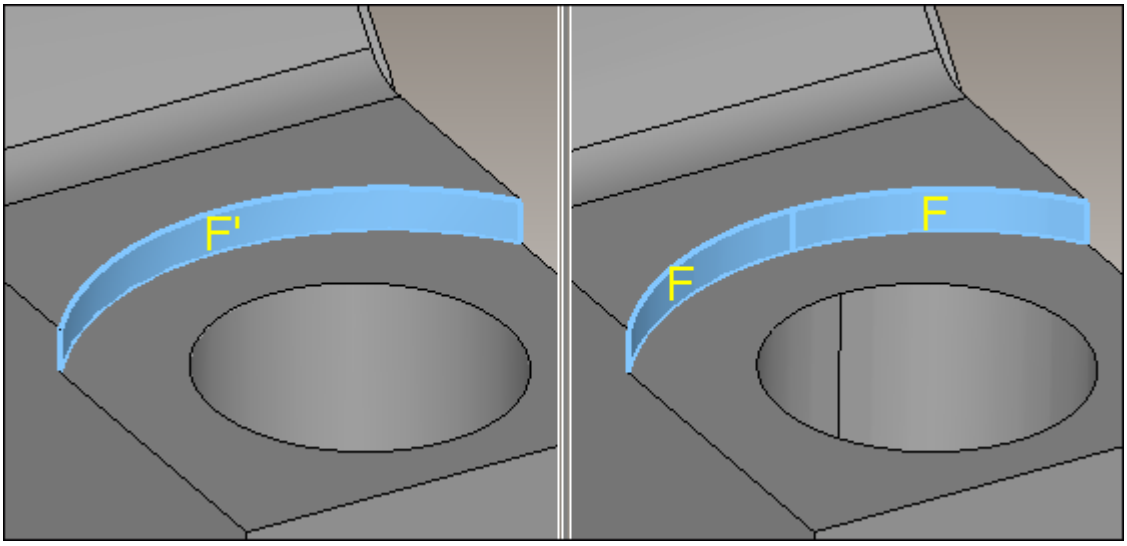

Effects of condition on model-based definition translation: If the face in the native model has annotations which reference it, these annotations must be associated with all split faces in the translated model in order to preserve the original definition.

C9.1.3 Merged Face (G-FA-MR)

Definition: A face in the translated model matches two or more faces in the native model.

Measurement: The criterion is false if any occurrences of this condition exist in the model pair.

Source: https://assist.dla.mil -- Downloaded: 2017-01-09T06:14Z
Check the source to verify that this is the current version before use.

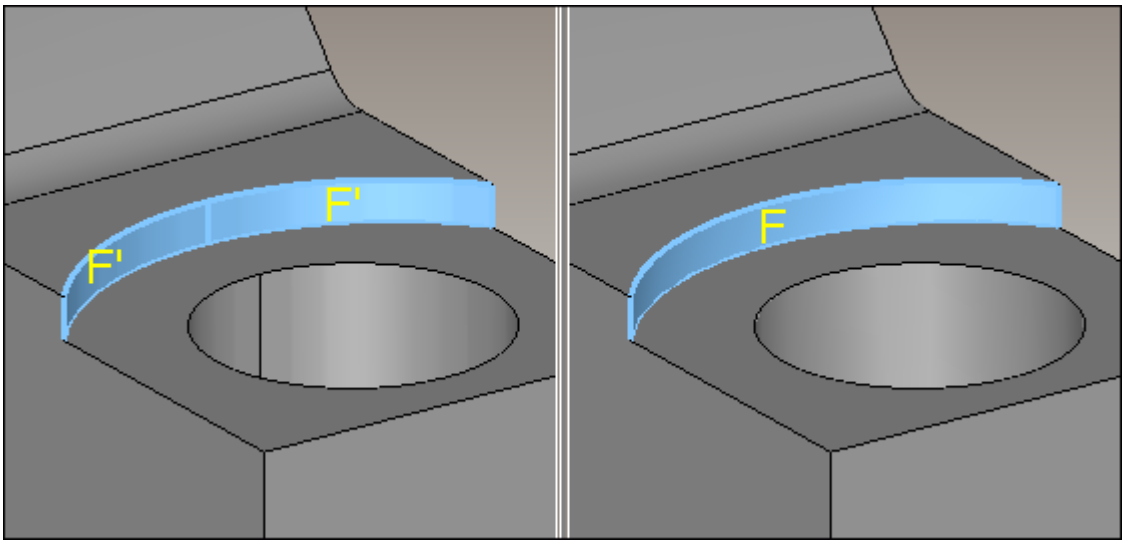

Effects of condition on model-based definition translation: If one of the faces in the native model has annotations which reference it, exclusive of the others in the merged set, then it will be impossible to preserve the original definition in the translated model.

C.9.1.4 Deviant Faces (G-FA-DV)

Definition: A set of translated faces have a significant geometric deviation from the matching face(s) in the native model.

Measurement: Maximum distance between any location on the native face(s) and the closest location on the translated face(s). The use of Greville sampling points is recommended for faces defined on NURBS surfaces.

Effects of condition on model-based definition translation: If the magnitude of the geometric deviation is a significant percentage of the manufacturing tolerance assigned to these faces, the translated model is not an equivalent representation of the native model because the nominal definition will have changed without a corresponding change in the tolerance. Or if these faces are associated with a datum, any significant deviation will likewise invalidate the equivalence of the derived model.

C.9.1.5 Different Face Type (G-FA-DT)

Definition: The geometric type of the surface on which a translated face is defined is different than the type of the surface on which the matching native face is defined.

Measurement: The criterion is false if any occurrences of this condition exist in the model pair.
Effects of condition on model-based definition translation: Generally, a change in geometric surface type corresponds to the loss of parametric information which may be critical to the product definition. For example, a face defined on a cylindrical surface with a specific radius of curvature that is translated

Source: https://assist.dla.mil -- Downloaded: 2017-01-09T06:14Z
Check the source to verify that this is the current version before use.

into a face defined on a NURBS may be roughly equivalent in shape but will no longer maintain the design intent of representing a surface with that specific radius of curvature.

C.9.1.6 Different Face Color (G-FA-DR)

Definition: The color attribute of a set of translated faces is different from the color of the matching face(s) in the native model.

Measurement: The sum of the absolute differences between corresponding integers in the RGB (red, green, blue) color definitions of the matched faces.
Effects of condition on model-based definition translation: If the color of faces in the native model is used to designate any kind of semantic meaning, the modification of face color during translation will produce a model which is not an equivalent derivative.

C.9.1.7 Different Face Area (G-FA-DS)

Definition: The surface area of a set of translated faces is different from the surface area of the matching face(s) in the native model.

Measurement: The percent change from the area of the native face(s) to the area of the matched face(s).
Effects of condition on model-based definition translation: If the face in the native model has annotations which reference it, then the scope of application of the annotations in the translated model may be significantly different.

C.9.2 Solid geometry validation criteria

C.9.2.1 Unmatched Solid (G-SO-UM)

Definition: A solid in one model has no corresponding solid in the other model.

Measurement: The criterion is false if any solid in the native model does not have a corresponding solid in the translated model.

Effects of condition on model-based definition translation: If the unmatched solid is in the native model, it represents significant data loss. If the unmatched solid is in the translated model, it causes confusion and is generally the result of incorrect filtering during the translation process.

C.9.2.2 Different Solid Area (G-SO-DS)

Definition: The surface area of a translated solid is different from the surface area of the matching solid in the native model.

Source: https://assist.dla.mil -- Downloaded: 2017-01-09T06:14Z
Check the source to verify that this is the current version before use.

Measurement: The percent change from the area of the native solid to the area of the translated solid.
Effects of condition on model-based definition translation: This high-level criterion indicates a significant shape change.

C.9.2.3 Different Solid Location (G-SO-DL)

Definition: The centroid of a translated solid is different from the centroid of the matching solid in the native model.

Measurement: The distance between the centroid of the native solid to the centroid of the translated solid divided by the diagonal distance across the bounding box of the native solid.
Effects of condition on model-based definition translation: This high-level criterion indicates a significant shape change.

C.9.2.4 Different Solid Volume (G-SO-DE)

Definition: The volume of a translated solid is different from the volume of the matching solid in the native model.

Measurement: The percent change from the volume of the native solid to the volume of the translated solid.

Effects of condition on model-based definition translation: This high-level criterion indicates a significant shape change.

C.9.2.5 Unsewn Solid (G-SO-US)

Definition: A native model solid has no matching solid in the translated model but all of its faces match faces in open shells and/or unsewn faces in the translated model.

Measurement: The criterion is false if any solid in the native model satisfies this condition.

Effects of condition on model-based definition translation: Many downstream processes require a solid to be defined as a closed volume of manifold faces. For example, mass property calculations and interference analysis. Although the geometric shape of the solid is still defined in the translated model, because it is not a closed volume it has lost significant value for these downstream processes.

Source: https://assist.dla.mil -- Downloaded: 2017-01-09T06:14Z
Check the source to verify that this is the current version before use.

C.9.3 Model geometry validation criteria

C.9.3.1 Different Model Area (G-MO-DS)

Definition: The total surface area of all faces (solid, open shell and unsewn) in a translated model is different from the total surface area of all faces in the native model.

Measurement: The percent change from the area of the native faces to the area of the translated faces.
Effects of condition on model-based definition translation: This high-level criterion indicates a significant shape change.

C.9.3.2 Different Model Location (G-MO-DL)

Definition: The centroid of all translated solids is different from the centroid of all solids in the native model.

Measurement: The distance between the centroid of the native model to the centroid of the translated model divided by the diagonal distance across the bounding box of the native model.
Effects of condition on model-based definition translation: This high-level criterion indicates a significant shape change.

C.9.3.3 Different Model Volume (G-MO-DE)

Definition: The total volume of all translated solids is different from the total volume of all solids in the native model.

Measurement: The percent change from the volume of the native model to the volume of the translated model.

Effects of condition on model-based definition translation: This high-level criterion indicates a significant shape change.

Source: https://assist.dla.mil -- Downloaded: 2017-01-09T06:14Z
Check the source to verify that this is the current version before use.

C.9.4 Assembly structure validation criteria

C.9.4.1 Unmatched Assembly (G-AS-UM)

Definition: A sub-assembly in one assembly has no corresponding sub-assembly in the other assembly.
Measurement: The criterion is false if any sub-assembly in the native model does not have a matching sub-assembly in the translated model.

Effects of condition on model-based definition translation: If the unmatched sub-assembly is in the native assembly, it represents significant data loss. If the unmatched sub-assembly is in the translated assembly, it causes confusion and is generally the result of incorrect filtering during the translation process.

C.9.4.2 Unmatched Part (G-PT-UM)

Definition: A part in one assembly has no corresponding part in the other assembly.

Measurement: The criterion is false if any part in the native model does not have a matching part in the translated model.

Effects of condition on model-based definition translation: If the unmatched part is in the native assembly, it represents significant data loss. If the unmatched part is in the translated assembly, it causes confusion and is generally the result of incorrect filtering during the translation process.

C.9.4.3 Split Assemblies (G-AS-SP)

Definition: A sub-assembly in the native model corresponds to two or more sub-assemblies in the translated model.

Measurement: The criterion is false if any occurrences of this condition exist in the model pair.

Effects of condition on model-based definition translation: This structural change can cause confusion when the specific structure of the native model is intended to be reused by downstream processes. If this change is acceptable, it must be clearly identified and managed by a validation process or else other validation criteria will be evaluated incorrectly.

C.9.4.4 Split Parts (G-PT-SP)

Definition: A part in the native model corresponds to two or more parts in the translated model.

Measurement: The criterion is false if any occurrences of this condition exist in the model pair.

Source: https://assist.dla.mil -- Downloaded: 2017-01-09T06:14Z
Check the source to verify that this is the current version before use.

Effects of condition on model-based definition translation: This structural change can cause confusion when the specific structure of the native model is intended to be reused by downstream processes. If this change is acceptable, it must be clearly identified and managed by a validation process or else other validation criteria will be evaluated incorrectly.

C.9.4.5 Merged Assembly (G-AS-MR)

Definition: A sub-assembly in the translated model corresponds to two or more sub-assemblies in the native model.

Measurement: The criterion is false if any occurrences of this condition exist in the model pair.
Effects of condition on model-based definition translation: This structural change can cause confusion when the specific structure of the native model is intended to be reused by downstream processes. If this change is acceptable, it must be clearly identified and managed by a validation process or else other validation criteria will be evaluated incorrectly.

C.9.4.6 Merged Part (G-PT-MR)

Definition: A part in the translated model corresponds to two or more parts in the native model.

Measurement: The criterion is false if any occurrences of this condition exist in the model pair.

Effects of condition on model-based definition translation: This structural change can cause confusion when the specific structure of the native model is intended to be reused by downstream processes. If this change is acceptable, it must be clearly identified and managed by a validation process or else other validation criteria will be evaluated incorrectly.

C.9.4.7 Different Assembly Location (G-AS-DL)

Definition: The centroid of all translated parts in an assembly is different from the centroid of all parts in the native assembly.

Measurement: The distance between the centroid of the native assembly to the centroid of the translated assembly divided by the diagonal distance across the bounding box of the native assembly.

Effects of condition on model-based definition translation: This high-level criterion indicates a significant change in the position and/or orientation of the assembly.

Source: https://assist.dla.mil -- Downloaded: 2017-01-09T06:14Z
Check the source to verify that this is the current version before use.

C.9.4.8 Different Part Location (G-PT-DL)

Definition: The centroid of a translated part is different from the centroid of the matching part in the native model.

Measurement: The distance between the centroid of the native part to the centroid of the translated part divided by the diagonal distance across the bounding box of the native part.

Effects of condition on model-based definition translation: This high-level criterion indicates a significant change in the position and/or orientation of the part.

C.9.5 3D Annotation validation criteria

C.9.5.1 Unmatched Annotation (A-AN-UM)

Definition: An annotation in one model has no corresponding annotation in the other model.

Measurement: The criterion is false if any annotation in the native model does not have a matching annotation in the translated model.

Effects of condition on model-based definition translation: If the unmatched annotation is in the native model, it represents significant data loss. If it is in the translated model, it likely indicates incorrect filtering during translation and will cause confusion.

C.9.5.2 Split Annotations (A-AN-SP)

Definition: An annotation in the native model corresponds to two or more annotations in the translated model.

Measurement: The criterion is false if any occurrences of this condition exist in the model pair.

Effects of condition on model-based definition translation: Causes confusion if the derivative model is intended to only preserve visual presentation. If a semantic representation derivative is intended, this can cause the native annotation parameters to be lost.

C.9.5.3 Merged Annotation (A-AN-MR)

Definition: An annotation in the translated model corresponds to two or more annotations in the native model.

Measurement: The criterion is false if any occurrences of this condition exist in the model pair.

Source: https://assist.dla.mil -- Downloaded: 2017-01-09T06:14Z
Check the source to verify that this is the current version before use.

Effects of condition on model-based definition translation: Causes confusion if the derivative model is intended to only preserve visual presentation. If a semantic representation derivative is intended, this can cause the native annotation parameters to be lost.

C.9.5.4 Different Annotation Color (A-AN-DR)

Definition: The color attribute of a set of translated annotations is different from the color of the corresponding matched annotations(s) in the native model.

Measurement: The sum of the differences between corresponding integers in the RGB (red, green, blue) color definitions of the matched annotations.

Effects of condition on model-based definition translation: If the color of annotations in the native model is used to designate any kind of semantic meaning, the modification of annotation color during translation will produce a model which is not an equivalent derivative.

C.9.5.5 Different Annotation Curve Length (A-AN-DS)

Definition: The length of the presentation curves of a set of translated annotations is significantly different from the length of the corresponding matched annotation curves in the native model.

Measurement: The percent change from the total length of the native presentation curves to the total length of the translated presentation curves.

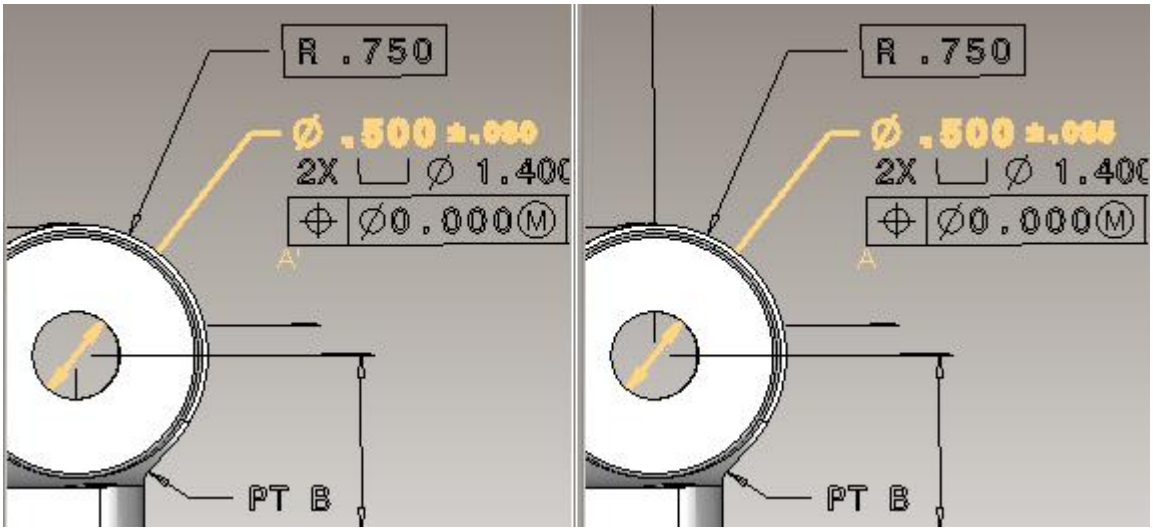

Effects of condition on model-based definition translation: If the translated model is intended to preserve the visual presentation of the annotation, this likely indicates a significant change in the semantic meaning of the presentation.

Source: https://assist.dla.mil -- Downloaded: 2017-01-09T06:14Z
Check the source to verify that this is the current version before use.

C.9.5.6 Different Annotation Geometry Size (A-AN-DE)

Definition: The size of the edges and/or faces associated with a set of annotations in the translated model is significantly different from the size of the matched annotation geometry in the native model.

Measurement: The percent change from the total area or length of the native faces or edges to the total area or length of the translated faces or edges.

Effects of condition on model-based definition translation: A significant change of this type indicates that the associated geometry for corresponding annotations is not equivalent and therefore the derivative model is not equivalent.

C.9.5.7 Different Annotation Location (A-AN-DL)

Definition: The centroid of the annotation presentation curves in the translated model is significantly different than the centroid of the matched annotation presentation curves in the native model.

Measurement: The distance between the two centroid locations divided by the diagonal length of the bounding box of the native annotation presentation curves.

Effects of condition on model-based definition translation: If the visual presentation is intended to be equivalent, this difference can indicate a change in its semantic meaning.

C.9.5.8 Different Annotation Orientation (A-AN-DO)

Definition: The view plane normal for a set of annotations in the translated model is significantly different from the normal of the match annotation view plane in the native model.

Measurement: The angle between the two view plane normal vectors.

Effects of condition on model-based definition translation: Depending on the type of annotation, this difference can change its semantic meaning.

C.9.5.9 Different Annotation Parameter (A-AN-DA)

Definition: The value of a semantic representation parameter for an annotation in the translated model is different than the value of the matched annotation parameter in the native model.

Measurement: False if the parameter has a text value and any characters are different. Special consideration may be given for negligible white space character differences. For numerical parameters, it is the percent change from the value of the native parameter to the value of the translated parameter.

Source: https://assist.dla.mil -- Downloaded: 2017-01-09T06:14Z
Check the source to verify that this is the current version before use.

Effects of condition on model-based definition translation: If a semantic representation derivative is intended, this can change the semantic meaning if the difference is large enough, i.e. beyond expected round-off error for numerical values.
Saved view validation criteria

C.9.5.10 Unmatched Saved View (A-SV-UM)

Definition: A saved view in one model has no corresponding saved view in the other model.

Measurement: The criterion is false if any saved view in the native model does not have a matching saved view in the translated model.

Effects of condition on model-based definition translation: If the unmatched saved view is in the native model, it represents significant data loss. If it is in the translated model, it likely indicates incorrect filtering during translation and will cause confusion.

C.9.5.11 Different Saved View Location (A-SV-DL)

Definition: The centroid of the presentation curves for all annotations of a saved view in the translated model is significantly different than the centroid of the annotation presentation curves for the matched saved view in the native model.

Measurement: The distance between the two centroid locations divided by the diagonal length of the bounding box of the native annotation presentation curves.

Effects of condition on model-based definition translation: If the visual presentation is intended to be equivalent, this difference can indicate a change in its semantic meaning.

C.9.5.12 Different Saved View Orientation (A-SV-DO)

Definition: The view vector of a saved view in the translated model is significantly different from the view vector of the match saved view in the native model.

Measurement: The angle between the two view vectors.

Effects of condition on model-based definition translation: Can cause confusion, especially if the view vector change causes one or more annotations to be viewed perpendicular to their view plane.

Source: https://assist.dla.mil -- Downloaded: 2017-01-09T06:14Z
Check the source to verify that this is the current version before use.

C.10 EXHIBIT D – EXAMPLES OF GEOMETRY CHECKING SOFTWARE AND PROCEDURES.

Example of a 3D CAD model being checked with the CADdoctor software from Elysium, Inc.

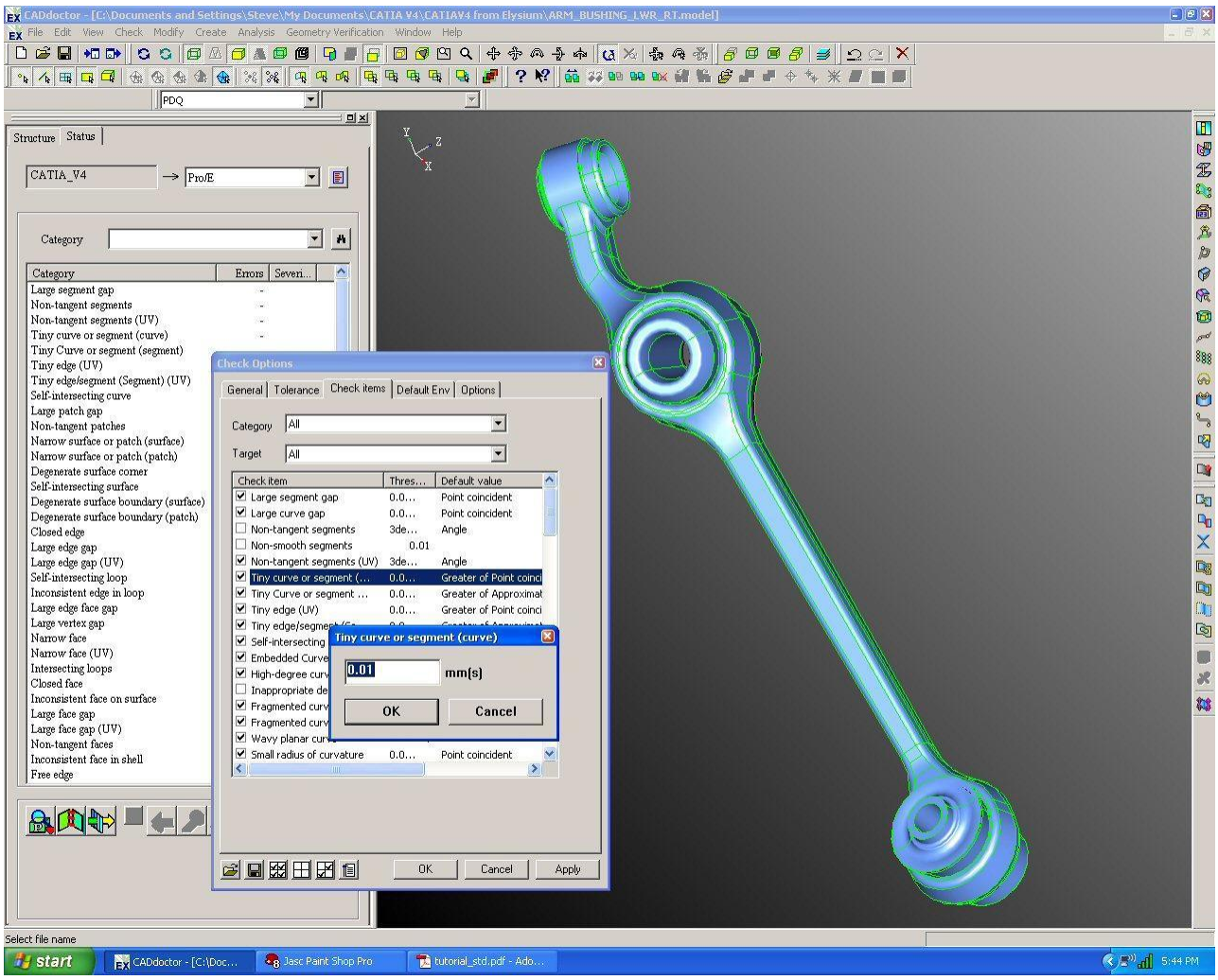

Figure 12. Select criteria to be checked and threshold values.

Only those criteria with a check mark will be checked.

Source: https://assist.dla.mil -- Downloaded: 2017-01-09T06:14Z
Check the source to verify that this is the current version before use.

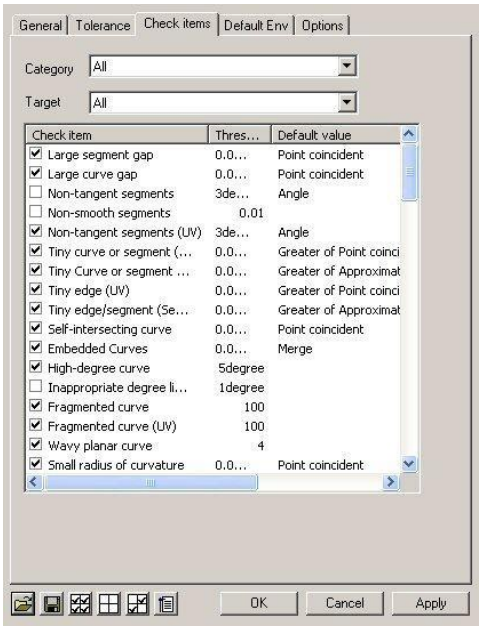

Figure 13. Dialog for selection of PDQ criteria.

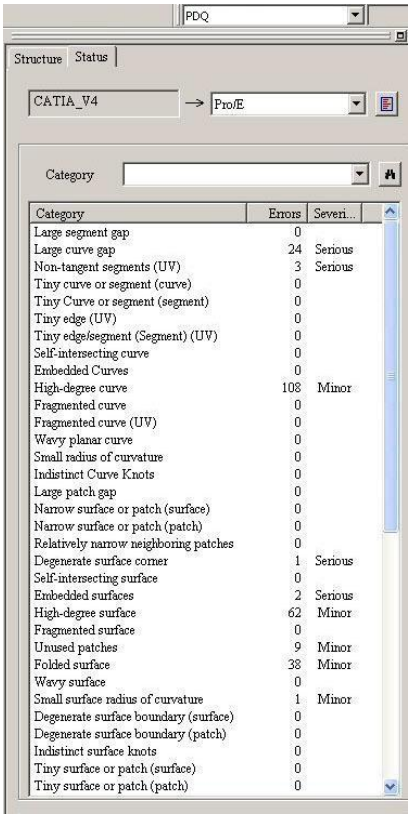

Figure 14. Report of errors found by PDQ software

Source: https://assist.dla.mil -- Downloaded: 2017-01-09T06:14Z
Check the source to verify that this is the current version before use.

Examples of a 3D CAD model being checked with the CADIQ software from International TechneGroup Inc.:

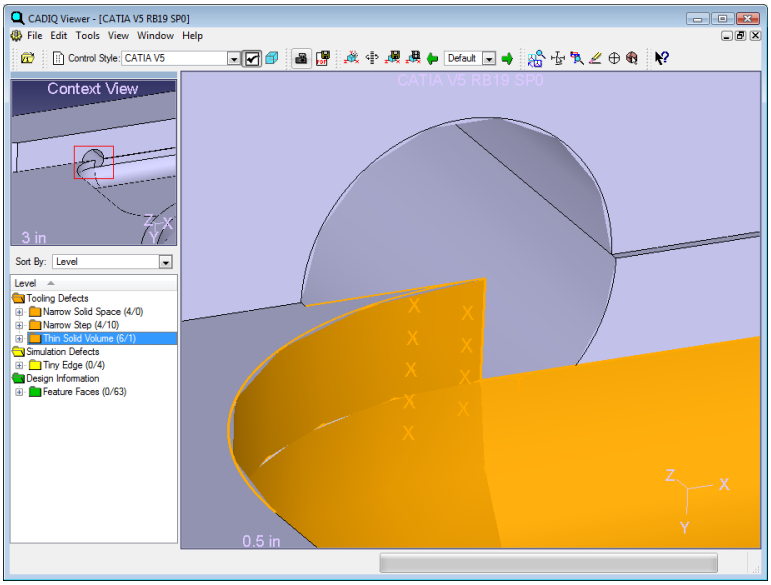

Figure 15 - Blocked hole found by the Thin Solid Volume criterion

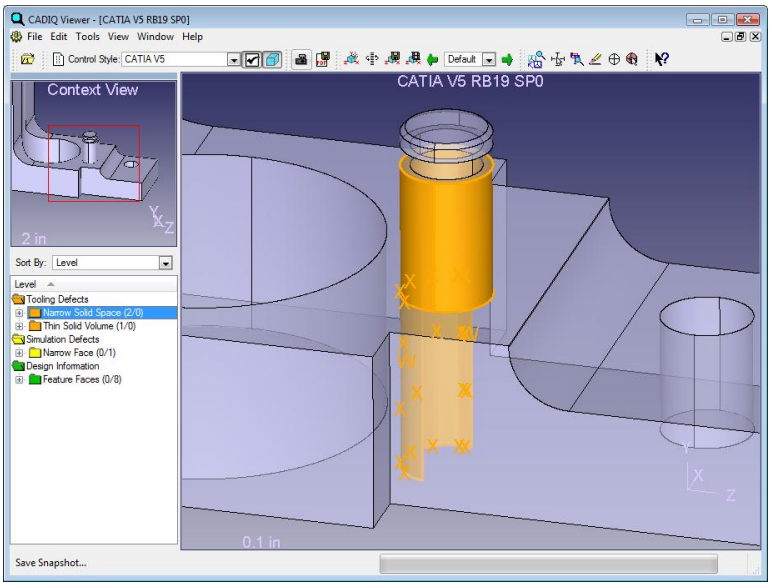

Figure 1- Crack found by the Narrow Solid Space criterion

Source: https://assist.dla.mil -- Downloaded: 2017-01-09T06:14Z
Check the source to verify that this is the current version before use.

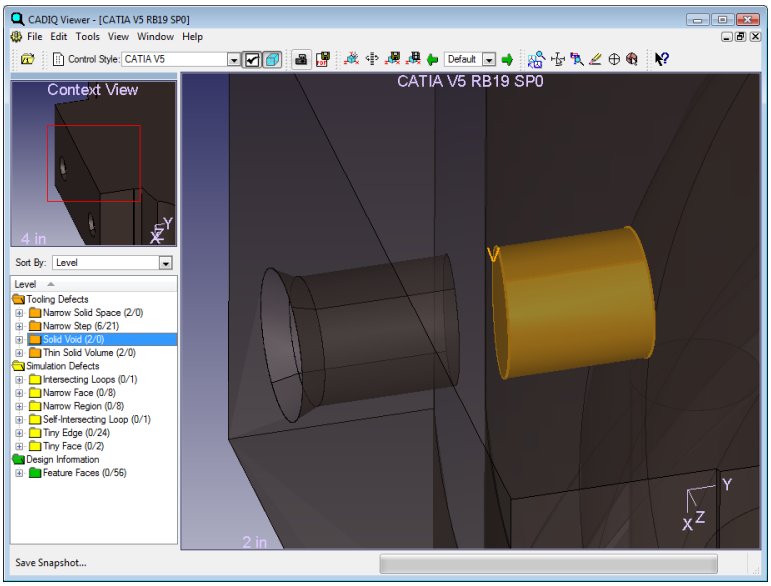

Figure 2- Void found by the Solid Void criterion

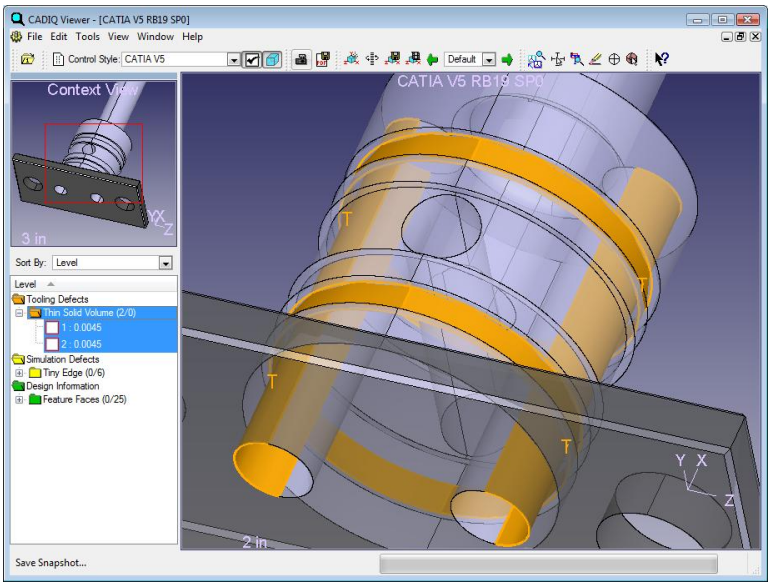

Figure 18 - Unmanufacturable holes found by the Thin Solid Volume criterion

Source: https://assist.dla.mil -- Downloaded: 2017-01-09T06:14Z
Check the source to verify that this is the current version before use.

C.11 EXHIBIT D -- EXAMPLES OF GEOMETRY HEALING SOFTWARE AND PROCEDURES.

If 3D model data is to be translated to another format, healing software may be applied to correct errors. The fully automated healing functions save operator time and produce consistent results. The first step is to choose which healing functions to apply automatically. In general, it is best to choose as many as possible to minimize operator labor.

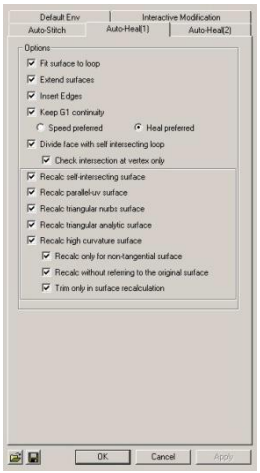

Figure 19. The Auto-Heal dialog allows operators to choose which CADdoctor healing functions are applied automatically.

After the options are selected, the operator initiates automatic healing by selecting a button.

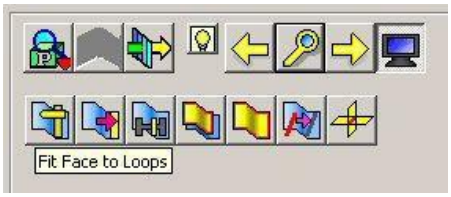

Figure 20. The CADdoctor healing tools menu.

The third button from the left in the top row starts the automated healing function. Errors present after automatic healing are displayed in a report.

Source: https://assist.dla.mil -- Downloaded: 2017-01-09T06:14Z
Check the source to verify that this is the current version before use.

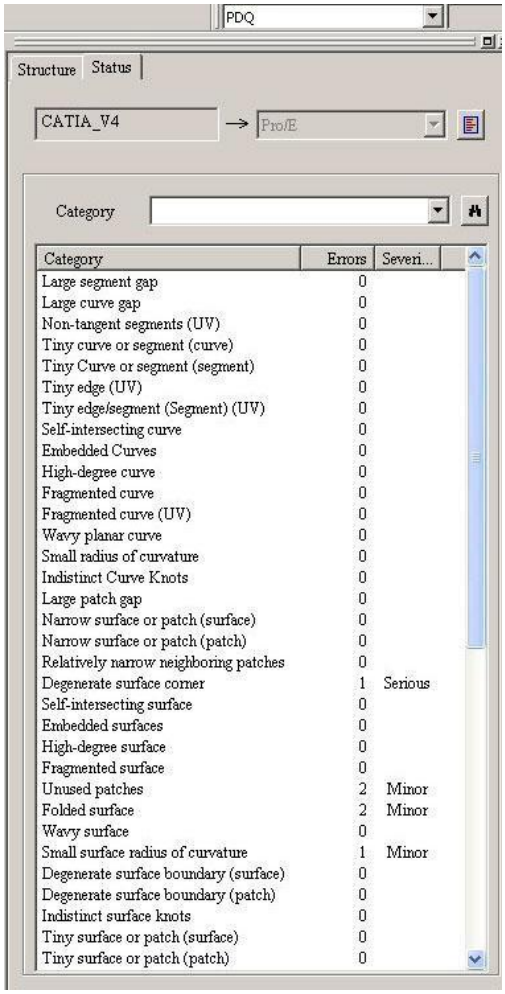

Category	Errors	Severi...
Large segment gap	0	
Large curve gap	0	
Non-tangent segments (UV)	0	
Tiny curve or segment (curve)	0	
Tiny Curve or segment (segment)	0	
Tiny edge (UV)	0	
Tiny edge/segment (Segment) (UV)	0	
Self-intersecting curve	0	
Embedded Curves	0	
High-degree curve	0	
Fragmented curve	0	
Fragmented curve (UV)	0	
Wavy planar curve	0	
Small radius of curvature	0	
Indistinct Curve Knots	0	
Large patch gap	0	
Narrow surface or patch (surface)	0	
Narrow surface or patch (patch)	0	
Relatively narrow neighboring patches	0	
Degenerate surface corner	1	Serious
Self-intersecting surface	0	
Embedded surfaces	0	
High-degree surface	0	
Fragmented surface	0	
Unused patches	2	Minor
Folded surface	2	Minor
Wavy surface	0	
Small surface radius of curvature	1	Minor
Degenerate surface boundary (surface)	0	
Degenerate surface boundary (patch)	0	
Indistinct surface knots	0	
Tiny surface or patch (surface)	0	
Tiny surface or patch (patch)	0	

Figure 21. Report showing quality defects that could not be corrected automatically.

At this point, the CAD operator can choose to correct errors by going back to the original CAD model and making revisions or by proceeding interactively with data-healing tools. If the process dictates that features be preserved (for example) if original CAD data is being checked into a PDM system), then correcting errors in the native CAD format is necessary.

Many popular CAD programs have tools for checking CAD geometry. These tools may indicate the location of at least some of the errors found by geometry validation software. Often dirty geometry in CAD models is caused by poor modeling practices. For example, if a designer has put two nearly-overlapping geometric features in the same place, troublesome geometry may occur near the feature boundaries. Rationalizing dimension-driven features in these local areas will often fix the problems.

If everything possible has been done to produce clean CAD models, and if models are being translated for purposes where access to parametric features is not required, then data-healing procedures of the sort shown in this Exhibit may be applied. Healing software generally is able to

Source: https://assist.dla.mil -- Downloaded: 2017-01-09T06:14Z
Check the source to verify that this is the current version before use.

find and zoom-in on tiny defects. In the menu below, the buttons with arrows and a magnifying glass may be used to find and repair defects that can't be fixed automatically.

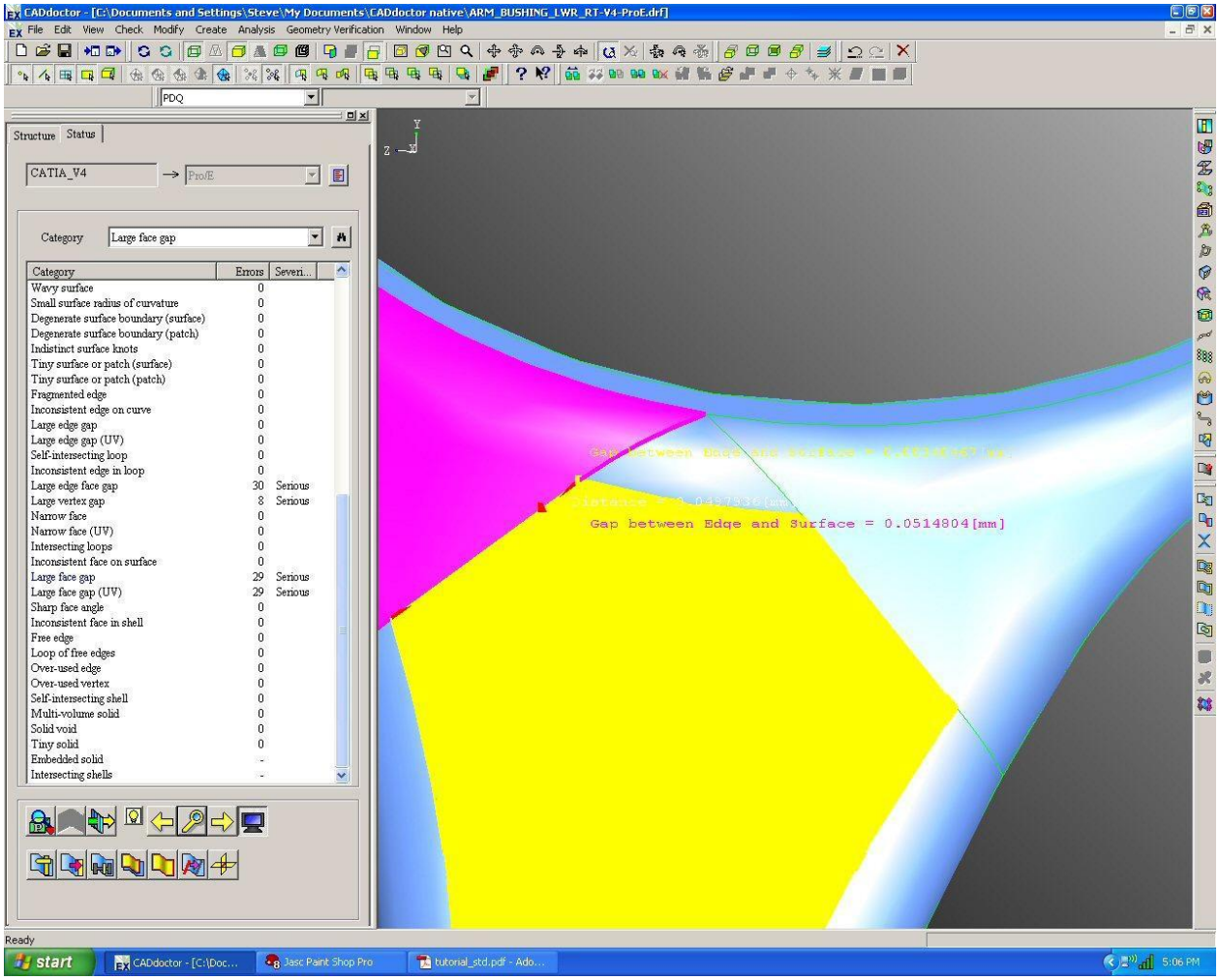

Figure 22. Close-up view of an excessive gap between faces in a 3D model.

The buttons in the lower row show the tools available for correcting each type of problem. Selecting the first button in the second row produces a dialog box that asks if the operator wants to perform a corrective action.

Source: https://assist.dla.mil -- Downloaded: 2017-01-09T06:14Z
Check the source to verify that this is the current version before use.

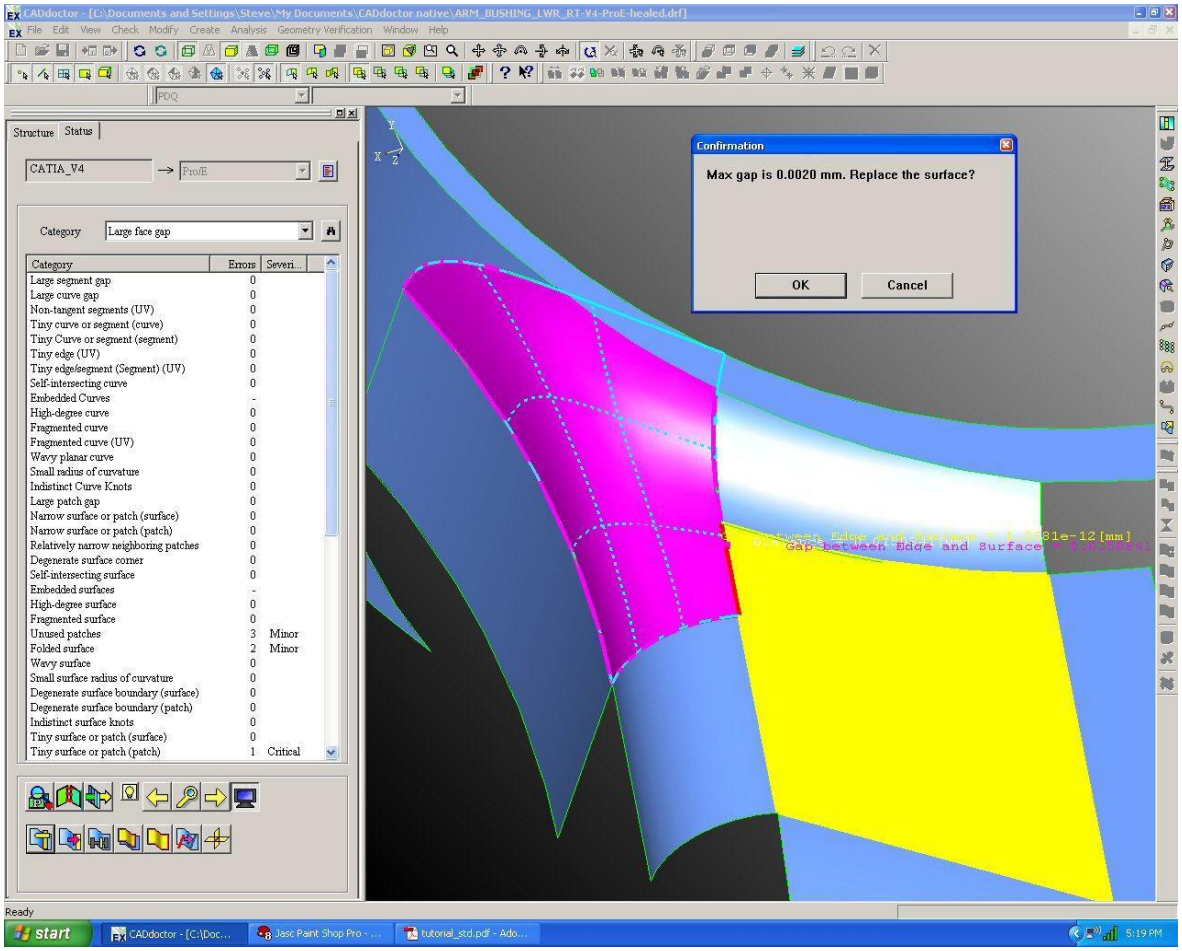

Figure 23. A dialog box asks if the operator wants CADdoctor to perform the healing action.

Source: https://assist.dla.mil -- Downloaded: 2017-01-09T06:14Z
Check the source to verify that this is the current version before use.

C.12 EXHIBIT E – EXAMPLES OF SEMI-AUTOMATED RE-MASTERING.

The process of semi-automated re-mastering proceeds as follows:

1. 2D sketches and parameters are translated.
2. Feature recipes are translated by matching, mapping, recognition, and decomposition.
3. Geometry and topology (B-rep) is natively created in target CAD system.
4. Original and translated geometry are compared.
5. If geometry is not identical, the file is sent to a skilled CAD operator for manual repair and completion.
6. Parts are checked for quality and compared with original.

Feature matching:

The sending and receiving systems each contains conceptually similar feature types, such an extruded sketch.

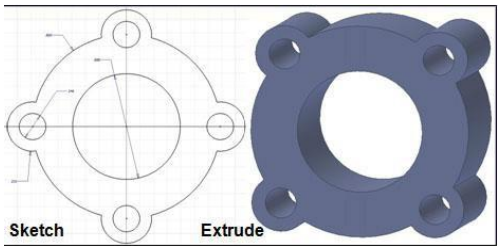

Figure 24. Feature extruded from a sketch in the original system.

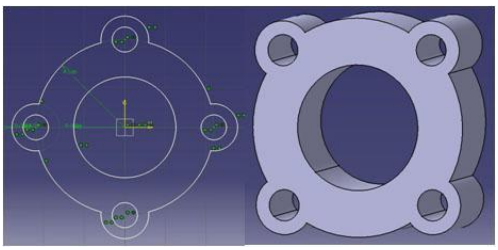

Figure 25. Translator matches the original feature to a conceptually identical feature in the receiving system.

Feature mapping:

A feature of one type is mapped to a different type of feature to produce the same shape. For example, a solid primitive of a cylinder can be mapped to an extrusion of a circular sketch in a system that lacks cylindrical primitives:

Source: https://assist.dla.mil -- Downloaded: 2017-01-09T06:14Z
Check the source to verify that this is the current version before use.

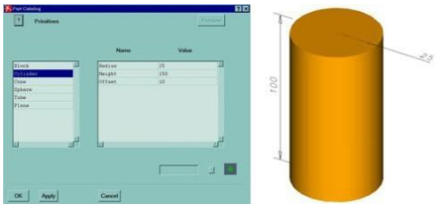

Figure 26. Example of a cylindrical feature defined by a solid primitive.

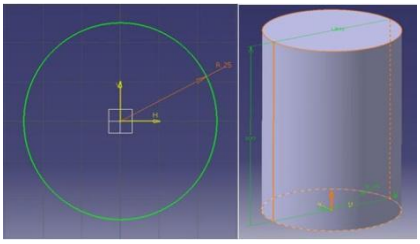

Figure 27. A geometrically equivalent cylinder created from an extruded circular sketch.

Feature recognition:

If the API of a CAD system does not permit a feature type to be recognized, features may sometimes be created by inferring their definitions from the geometry.

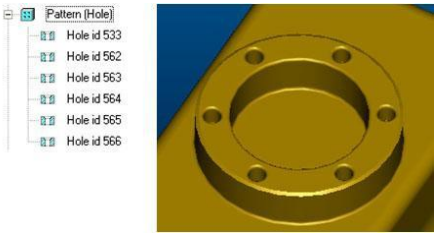

Figure 28. The API of the originating CAD system doesn't permit the extraction of pattern parameters.

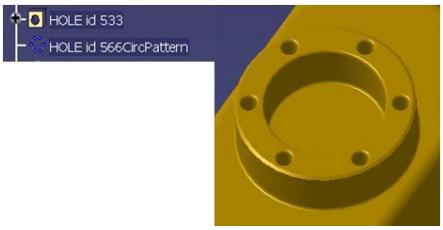

Figure 29. Data conversion software infers a hole-pattern feature from the geometry.

Feature decomposition:

Features that combine several simple features may be decomposed and recombined in accordance with the target system's conventions. An example follows:

Source: https://assist.dla.mil -- Downloaded: 2017-01-09T06:14Z
Check the source to verify that this is the current version before use.

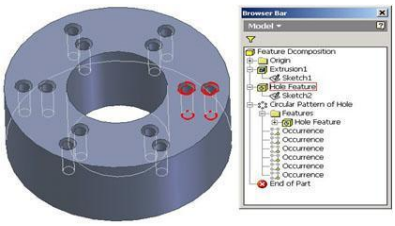

Figure 30. The originating system contains a single hole-feature made up of two holes arrayed in a circular pattern.

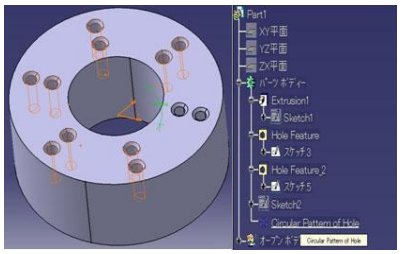

Figure 31. The target system requires that individual holes be arrayed in a circular pattern of two rows.

The following shows an example of a part re-mastered from Siemens NX to Dassault Systèmes CATIA V5 using the Elysium, Inc. CADfeature software.

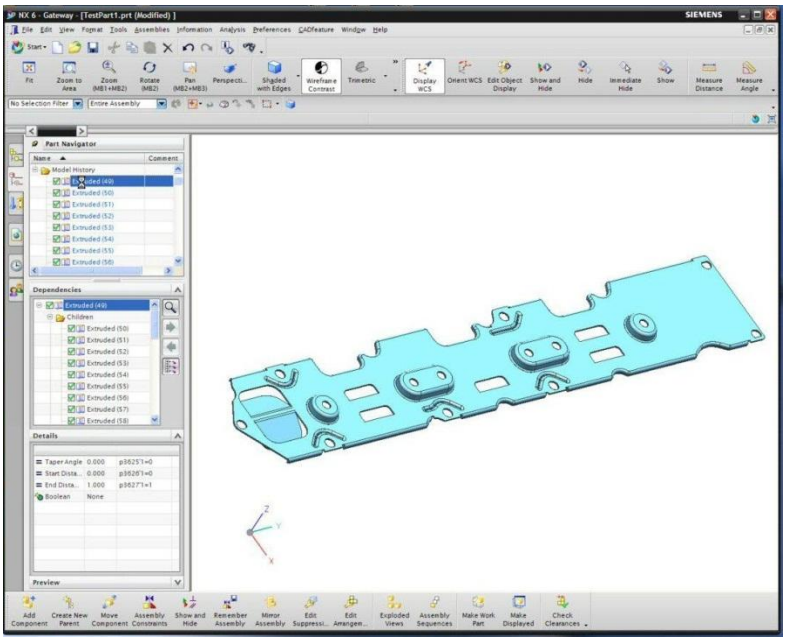

Figure 32. A feature-based 3D model originally created in Siemens NX CAD software. The history tree and list of feature dependencies are shown at the left of the display.

Source: https://assist.dla.mil -- Downloaded: 2017-01-09T06:14Z
Check the source to verify that this is the current version before use.

Feature-translation software reads the model from the originating 3D CAD system.

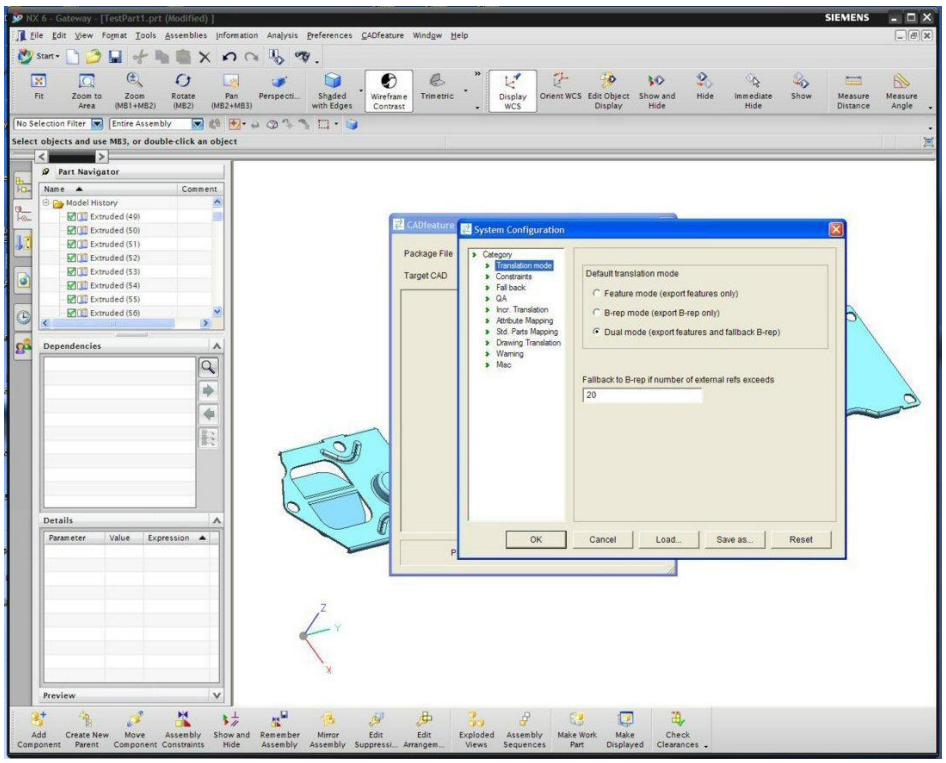

Figure 33. The operator may choose to have the model translated as a boundary representation (b-rep), a fully featured model, or both (dual mode).

The translator then matches, maps, recognizes, or decomposes the features of the originating system into features understood by the target system.

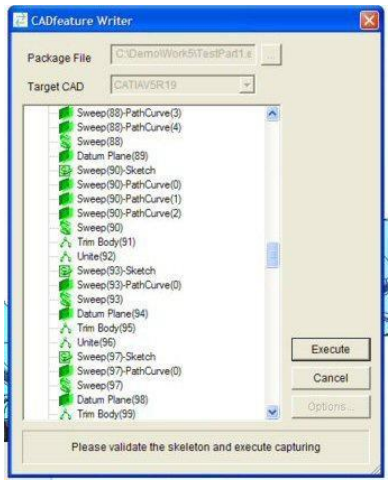

Figure 34. List of features awaiting conversion.

The operator chooses the acceptance criteria for a successful feature translation. If the criteria are not met, the part will be translated as b-rep only.

Source: https://assist.dla.mil -- Downloaded: 2017-01-09T06:14Z
Check the source to verify that this is the current version before use.

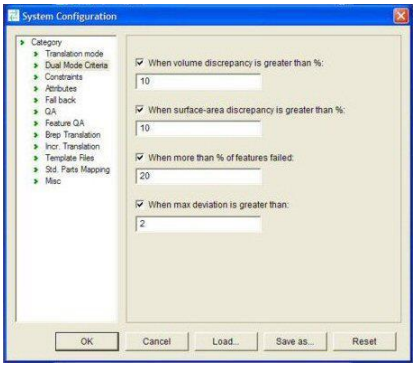

Figure 35. Acceptance criteria dialog.

The features are rebuilt in the target system. Geometry of the translated system is compared with the original.

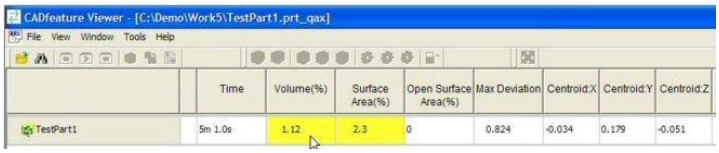

Figure 36. A report shows the difference in volume and surface area as well as the maximum surface deviation between the original model and the re-mastered version.

In some cases, features fail to rebuild after translation. The CADfeature Viewer allows users to identify failed features.

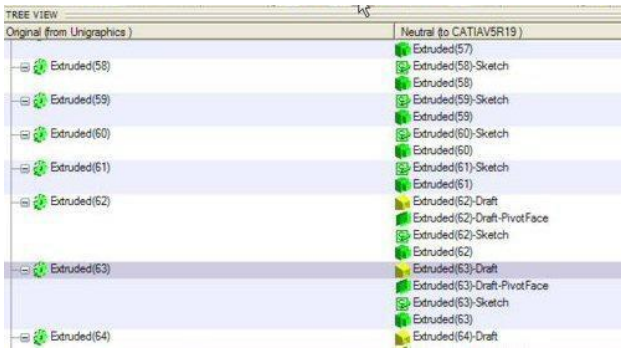

Figure 37. Features of the originating system are shown on the left, features in the target system on the right. Failed features in the target system are shown in yellow.

Source: https://assist.dla.mil -- Downloaded: 2017-01-09T06:14Z
Check the source to verify that this is the current version before use.

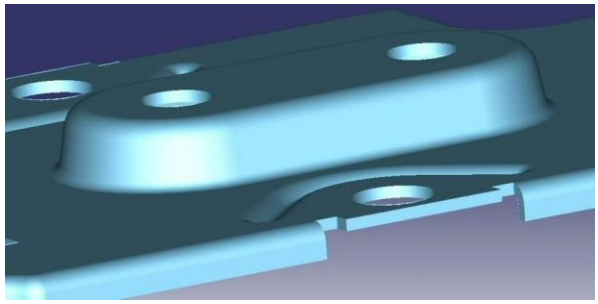

Figure 38. The original feature (extrude 63) combined an extruded profile with draft angle in one feature.

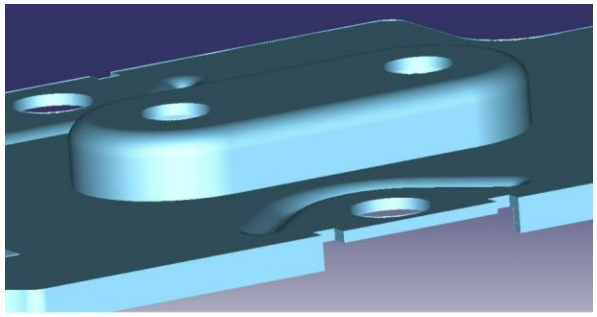

Figure 39. Extrude 63 was decomposed into a straight extrusion and a drafted face. The draft feature and the fillet feature at the base both failed.

Upon completion of the feature translation, a skilled CATIA V5 operator must interactively repair or replace all failed features such as those shown above.

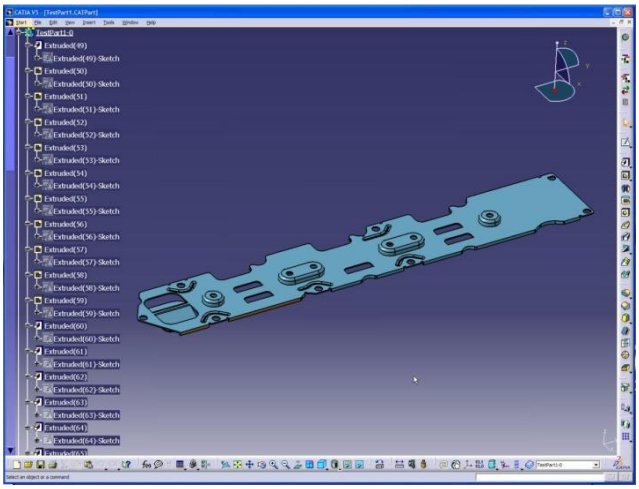

Figure 40. Translated part shown in the target system.

After failed features are repaired, the geometry is compared again with the original. If it is within allowable limits, the model is checked for quality, corrected, if necessary, and released for use in the target system.

Source: https://assist.dla.mil -- Downloaded: 2017-01-09T06:14Z
Check the source to verify that this is the current version before use.

C.13 EXHIBIT F – EXAMPLES OF DERIVATIVE MODEL VALIDATION SOFTWARE

Examples of a master 3D CAD model being compared with a derivative model using the CADIQ software from International TechneGroup Inc.:

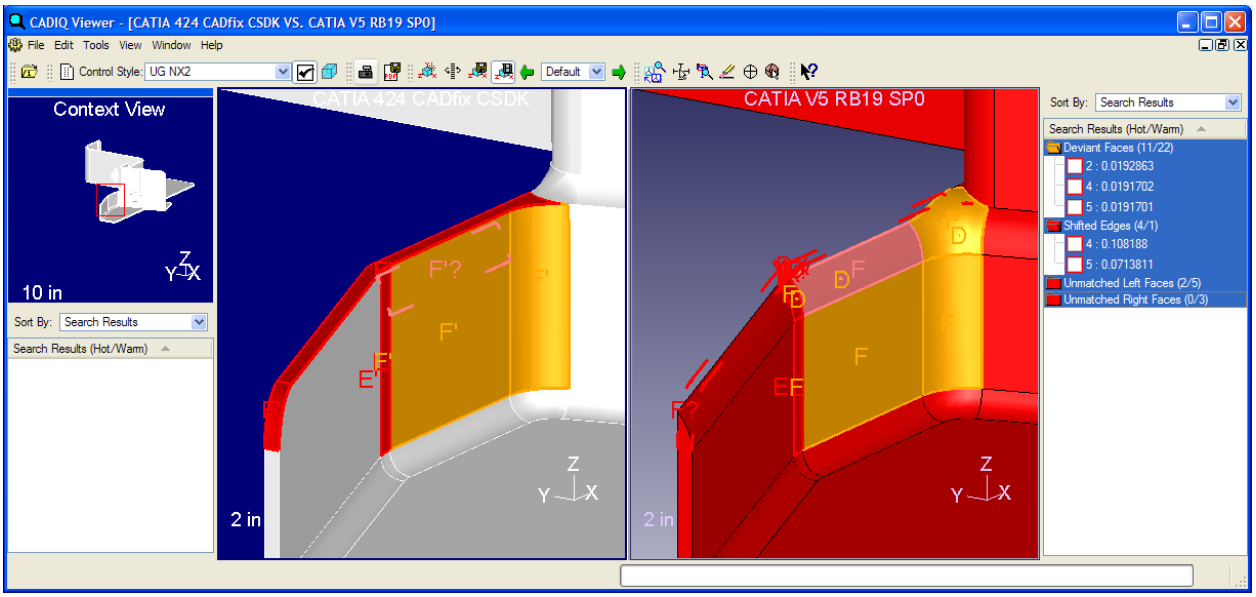

Figure 41 3—Unmatched faces and deviant faces introduced during legacy CAD migration.

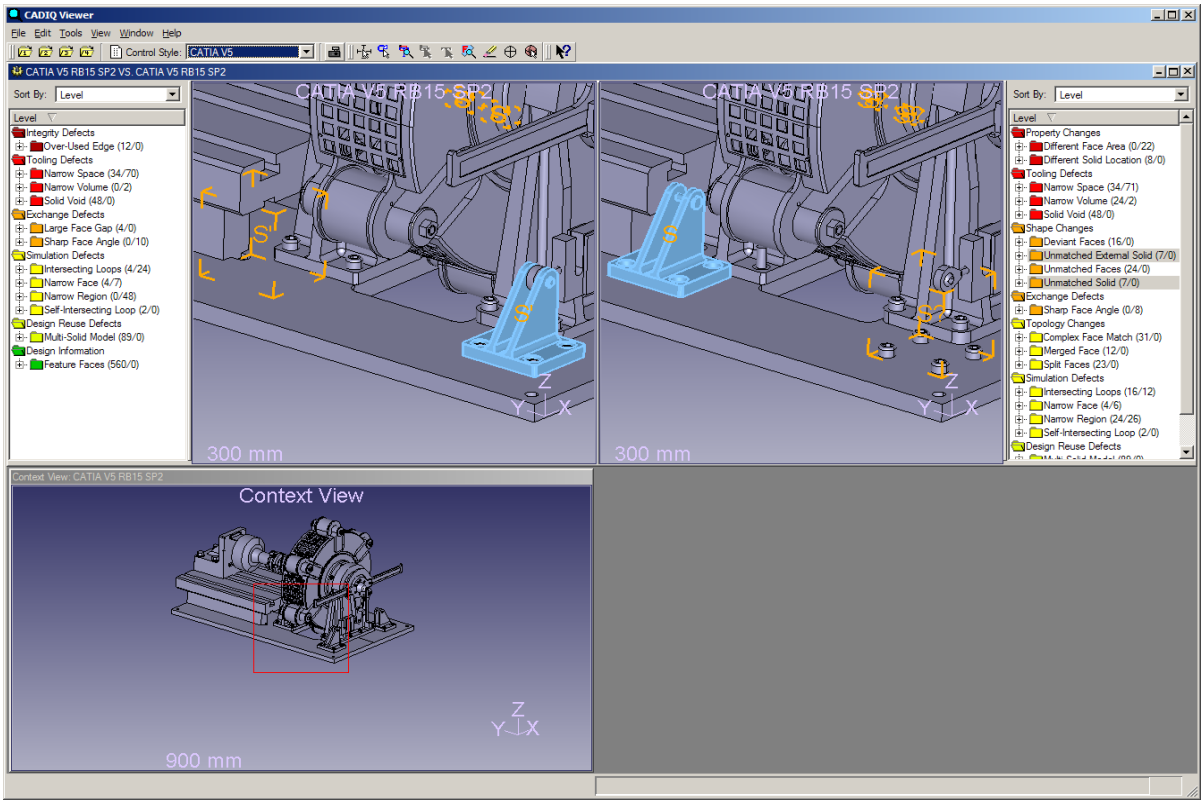

Figure 42 —Different part location condition introduced during archival and retrieval.

Source: https://assist.dla.mil -- Downloaded: 2017-01-09T06:14Z
Check the source to verify that this is the current version before use.

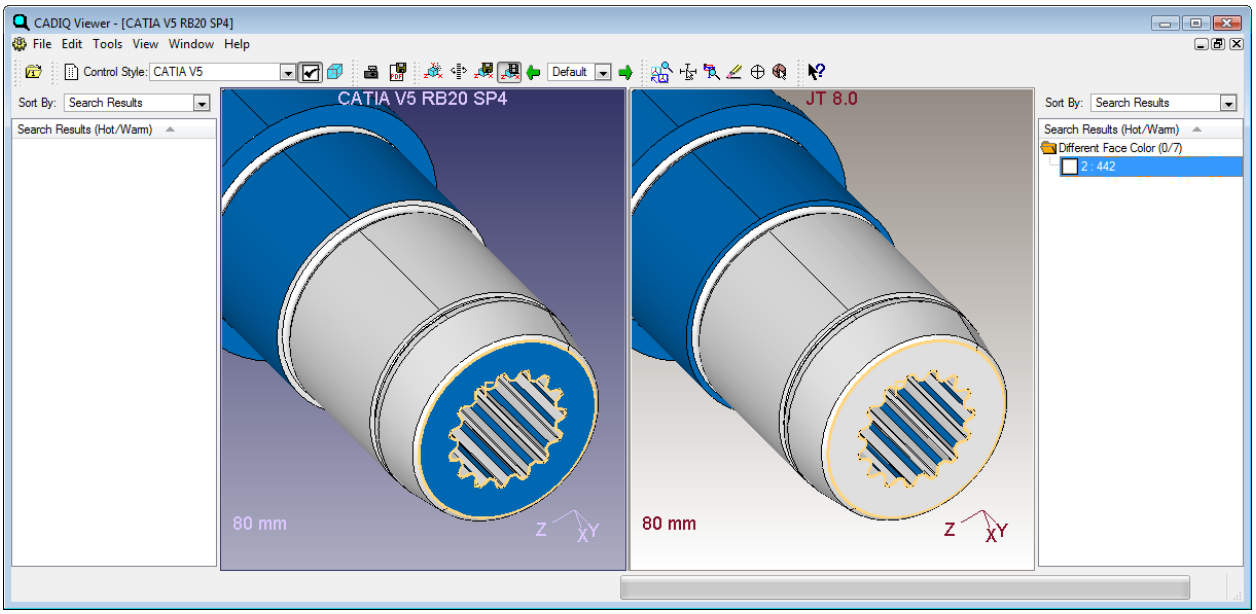

Figure 43 —Different face color condition introduced while generating a collaboration model.

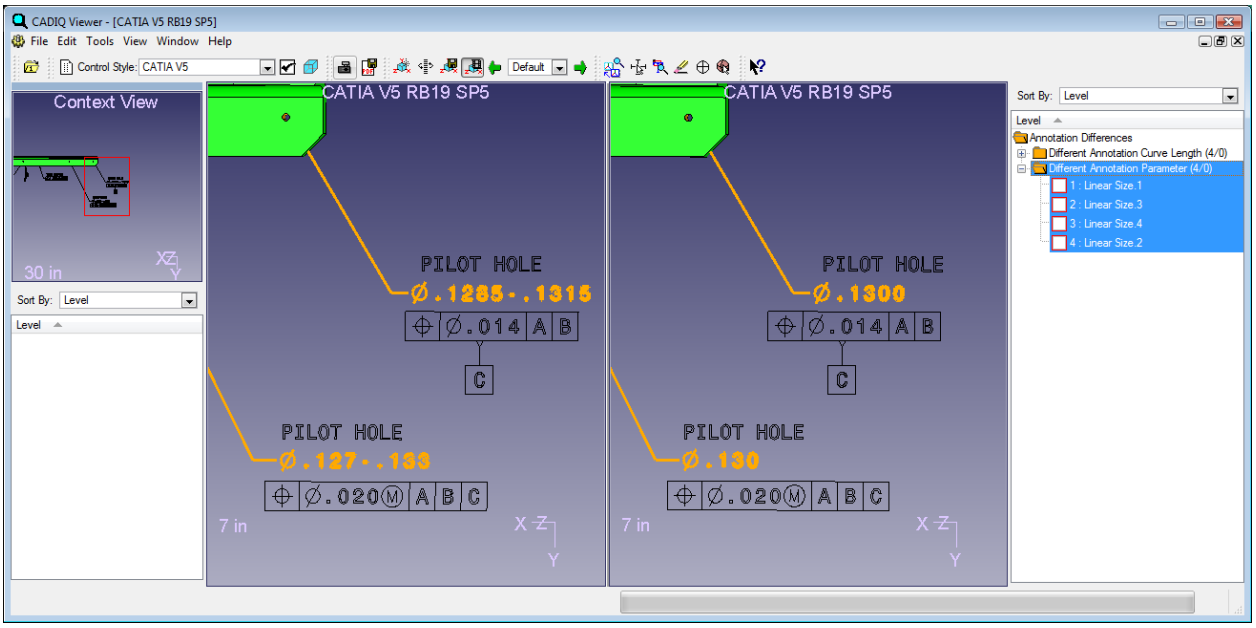

Figure 4—Different annotation parameter condition introduced during an automated model update process.

Source: https://assist.dla.mil -- Downloaded: 2017-01-09T06:14Z
Check the source to verify that this is the current version before use.

CONCLUDING MATERIAL

Custodians:

Army - AR

Navy - OS

Air Force -16

DLA - DH

Preparing Activity:

Army - AR

(Project: SESS-2012-013)

Review Activities:

Army – AC, AV, CR, EA, MI, MR, PT, SM, TM

Navy – AS, CG, CH, EC, MC, ND, SA, SH

Air Force – 01, 08, 10, 11, 13, 19, 33, 94, 99

DLA – CC

Other – DI, HS, MA, MP, NS, SE, SO

NOTE: The activities listed above were interested in this document as of the date of this document. Since organizations and responsibilities can change, you should verify the currency of the information above using the ASSIST Online database at https://assist.dla.mil .

Source: https://assist.dla.mil -- Downloaded: 2017-01-09T06:14Z
Check the source to verify that this is the current version before use.